GA4SAN5
Single-Stage Air Conditioner with Puron Advance™ Refrigerant 1.5 To 5 Tons

Product Data

This unit has been designed utilizing Bryant's non-ozone depleting, low global warming potential Puron Advance™ refrigerant.
Air conditioners with Puron Advance™ refrigerant provide a collection of features unmatched by any other family of equipment.

NOTE: Ratings contained in this document are subject to change at any time. Always refer to the AHRI directory (www.ahridirectory.org) for the most up-to-date ratings information.

Features / Benefits

Efficiency
- 13.4 - 16.0 SEER2 / 11.0 – 13.5 EER2
- Indoor air quality accessories available

Comfort
- System supports programmable or standard thermostat controls

Sound
- Sound levels as low as 72 dBA

Reliability
- Non-ozone depleting, low global warming potential Puron Advance™ refrigerant
- Scroll compressor
- Internal pressure relief valve
- Internal thermal overload
- Filter drier

Durability
Protection Package:
- Solid, durable sheet metal construction
- Dense wire coil guard

Applications
- Long–line – up to 250 feet (76.20 m) total equivalent length, up to 200 feet (60.96 m) condenser above evaporator, or up to 80 ft. (24.4 m) evaporator above condenser (See Long Line Guide for more information.)
- Low ambient cooling (down to 0°F / -18°C) with approved low ambient accessory kits.

Limited Warranty
- 5-year parts limited warranty (including compressor and coil)
  10-year parts limited warranty (including compressor and coil) with timely registration*
  – Equipment must be registered within 90 days of original installation, except in jurisdictions where warranty benefits cannot be conditioned on registration.
  * Applies to original purchaser/homeowner and not available to subsequent owners except in jurisdictions where applicable laws dictate otherwise.

See warranty certificate for complete details and restrictions.

MODEL NUMBER NOMENCLATURE

1	2	3	4	5	6	7	8, 9	10	11	12
G	**A**	**4**	**S**	**A**	**N**	**5**	**18**	**0**	**0**	**N**
Brand Type	**OD Type**	**SEER2**	**OD Design Type**	**Major Series**	**Voltage**	**Refrigerant**	**Nominal Capacity (X 1,000 BTUH)**	**Feature**	**Special Feature**	**Region**
G = Builder	**A** = AC	**4** = 13.4 SEER2	**S** = Single-Stg	**A** = Initial Series	**N** = 208-230-1 or 208/230-1	**5** = R-454B	**18** = 1.5 Tons **24** = 2 Tons **30** = 2.5 Tons **36** = 3 Tons **42** = 3.5 Tons **48** = 4 Tons **60** = 5 Tons	**0** = Standard **1** = HPS & LPS	**0** = Standard **1** = Compressor Electrical Rating Change	N = North AC

Use of the AHRI Certified TM Mark indicates a manufacturer's participation in the program For verification of certification for individual products, go to www.ahridirectory.org.

AHRI RATINGS

NOTE: Ratings contained in this document are subject to change at any time.

For AHRI ratings certificates, please refer to the AHRI directory www.ahridirectory.org

Additional ratings and system combinations can be accessed via the Ratings Database here:MyBryantRatings

CATALOG ORDERING NUMBERS

Size	Model Number
18	GA4SAN51800N GA4SAN51810N
24	GA4SAN52400N GA4SAN52410N
30	GA4SAN53000N GA4SAN53010N
36	GA4SAN53600N GA4SAN53610N
42	GA4SAN54200N GA4SAN54210N
48	GA4SAN54801N GA4SAN54810N
60	GA4SAN56000N GA4SAN56010N

STANDARD FEATURES

Features	18	24	30	36	42	48	60
Puron Advance™ Refrigerant	X	X	X	X	X	X	X
SEER2 (Range depending on indoor combination)	13.4 - 16.0	13.4 - 16.0	13.4 - 16.0	13.4 - 15.5	13.4 - 16.0	13.4 - 15.2	13.4 - 15.0
Scroll Compressor	X	X	X	X	X	X	X
Factory Supplied, Field Installed Filter Drier	X	X	X	X	X	X	X
Front Seating Service Valves	X	X	X	X	X	X	X
Internal Pressure Relief Valve	X	X	X	X	X	X	X
Internal Thermal Overload	X	X	X	X	X	X	X
Long Line Capability	X	X	X	X	X	X	X
Low Ambient Capability with Kit	X	X	X	X	X	X	X

PHYSICAL DATA

UNIT SIZE	18	24	30	36	42	48	60
COMPRESSOR TYPE	Scroll						
REFRIGERANT	Puron Advance™ (R-454B)						
Factory Charge lb (kg)*	3.90 (1.77)	3.90 (1.77)	5.30 (2.4)	4.90 (2.22)	6.60 (2.99)	7.10 (3.22)	6.40 (2.90)
COND FAN	Forward Swept or Propeller Type, Direct Drive						
Air Discharge	Vertical						
Air Qty (CFM)	1600	2100	2700	2800	3800	3000	4000
Motor HP	1/12	1/10	1/10	1/10	1/4	1/5	1/4
Motor RPM	1100	1100	825	825	1100	1100	1100
COND COIL							
Face Area (Sq ft)	9.7	13.1	17.2	15.1	21.5	15.1	17.2
Fins per In.	25	25	25	25	25	20	20
Rows	1	1	1	1	1	2	2
Circuits	4	4	4	4	6	6	8
VALVE CONNECT. (In. ID)							
Vapor	3/4	3/4	3/4	7/8	7/8	7/8	7/8
Liquid	3/8"						
REFRIGERANT TUBES* (In. OD)							
Rated Vapor†	5/8	3/4	3/4	7/8	7/8	7/8	1 1/8
Rated Liquid Line‡	3/8"						

*.For 15 ft. lineset. Adjust per installation instructions. Refrigerant charge varies with indoor unit; refer to refrigerant charge label.
†.Units are rated with 25 ft (7.6 m) of lineset length. See Vapor Line Sizing and Cooling Capacity Loss table when using other sizes and lengths of lineset.
‡.See Liquid Line Sizing For Cooling Only Systems with Puron Advance™ Refrigerant tables.
Note: See unit Installation Instruction for proper installation.

Manufacturer reserves the right to change, at any time, specifications and designs without notice and without obligations.

REFRIGERANT PIPING LENGTH LIMITATIONS

Liquid Line Sizing and Maximum Total Equivalent Lengths for Cooling Only Systems with Puron Advance™ Refrigerant:

The maximum allowable length of a residential split system depends on the liquid line diameter and vertical separation between indoor and outdoor units.

See Table below for liquid line sizing and maximum lengths :

Table 1 – Maximum Total Equivalent Length
Outdoor Unit BELOW Indoor Unit

Size	Liquid Line Connection	Liquid Line Diam. (in.) w/ TXV	AC with Puron Advance™ Refrigerant Maximum Total Equivalent Length*: Outdoor unit BELOW Indoor Vertical Separation ft (m)								
			0-5 (0-1.5)	6-10 (1.8-3.0)	11-20 (3.4-6.1)	21-30 (6.4-9.1)	31-40 (9.4-12.2)	41-50 (12.5-15.2)	51-60 (15.5-18.3)	61-70 (18.6-21.3)	71-80 (21.6-24.4)
18000	3/8	1/4	150	150	125	100	100	75	--	--	--
		5/16	250	250	250	250	250	250	250	225	150
		3/8	250	250	250	250	250	250	250	250	250
24000	3/8	1/4	75	75	75	50	50	--	--	--	--
		5/16	250	250	250	250	250	225	175	125	100
		3/8	250	250	250	250	250	250	250	250	250
30000	3/8	1/4	30	--	--	--	--	--	--	--	--
		5/16	175	225	200	175	125	100	75	--	--
		3/8	250	250	250	250	250	250	250	250	250
36000	3/8	5/16	175	150	150	100	100	100	75	--	--
		3/8	250	250	250	250	250	250	250	250	250
42000	3/8	5/16	125	100	100	75	75	50	--	--	--
		3/8	250	250	250	250	250	250	250	250	150
48000	3/8	3/8	250	250	250	250	250	250	230	160	--
60000	3/8	3/8	250	250	250	225	190	150	110	--	--

*.Total equivalent length accounts for losses due to elbows or fitting. See the Long Line Guideline for details.
-- = Outside acceptable range

Table 2 – Maximum Total Equivalent Length
Outdoor Unit ABOVE Indoor Unit

Size	Liquid Line Connection	Liquid Line Diam. (in.) w/ TXV	AC with Puron Advance™ Refrigerant Maximum Total Equivalent Length*: Outdoor unit ABOVE Indoor Vertical Separation ft (m)							
			25 (7.6)	26-50 (7.9-15.2)	51-75 (15.5-22.9)	76-100 (23.2-30.5)	101-125 (30.8-38.1)	126-150 (38.4-45.7)	151-175 (46.0-53.3)	176-200 (53.6-61.0)
18000	3/8	1/4	175	250	250	250	250	250	250	250
		5/16	250	250	250	250	250	250	250	250
		3/8	250	250	250	250	250	250	250	250
24000	3/8	1/4	100	125	175	200	225	250	250	250
		5/16	250	250	250	250	250	250	250	250
		3/8	250	250	250	250	250	250	250	250
30000	3/8	1/4	30	--	--	--	--	--	--	--
		5/16	250	250	250	250	250	250	250	250
		3/8	250	250	250	250	250	250	250	250
36000	3/8	5/16	225	250	250	250	250	250	250	250
		3/8	250	250	250	250	250	250	250	250
42000	3/8	5/16	175	200	250	250	250	250	250	250
		3/8	250	250	250	250	250	250	250	250
48000	3/8	3/8	250	250	250	250	250	250	250	250
60000	3/8	3/8	250	250	250	250	250	250	250	250

*.Total equivalent length accounts for losses due to elbows or fitting. See the Long Line Guideline for details.
-- = Outside acceptable range

Table 3 – Refrigerant Charge Adjustments

Liquid Line Size	Puron Advance™ Charge oz/ft (g/m)
3/8	0.60 (17.74) (Factory charge for lineset = 9 oz / 266.16 g)
5/16	0.40 (11.83)
1/4	0.27 (7.98)

Units are factory charged for 15 ft (4.6 m) of 3/8" liquid line. The factory charge for 3/8" lineset 9 oz. (266.16 g). When using other length or diameter liquid lines, charge adjustments are required per the chart above.

Charging Formula:

[(Lineset oz/ft X total length) – (factory charge for lineset)] = charge adjustment

Example 1: System has 15 ft of lineset* using existing 1/4" liquid line. What charge adjustment is required?

Formula:(.27 oz/ft X 15ft) – (9 oz) = (-4.95) oz.

Net result is to remove 4.95 oz of refrigerant from the system

Example 2: System has 45 ft of existing 5/16" liquid line. What is the charge adjustment?

Formula:(.40 oz/ft. X 45ft) – (9 oz.) = 9 oz.

Net result is to add 9 oz of refrigerant to the system

NOTE: Conditions must be favorable for charging by subcooling method. Indoor temperature must be 70°F to 80°F (21°C to 27°C), and outdoor temperature must be 70°F to 100°F (21°C to 38°C). If outside these conditions, adjust charge for long linesets by weigh-in method.

* When applicable. Refer to Physical Data Table in this PD and to the Installation Instructions for more information.

Long Line Applications

An application is considered "Long Line" when the total equivalent tubing length exceeds 80 ft or when there is more than 35 ft. vertical separation between indoor and outdoor units. These applications require additional accessories and system modifications for reliable system operation. The maximum allowable total equivalent length is 250 ft. The maximum vertical separation is 200 ft. when outdoor unit is above indoor unit, and 80 ft. when the outdoor unit is below the indoor unit. Refer to Accessory Usage Guideline below for required accessories. See Long-Line Application Guideline for required piping and system modifications. Also, refer to table below for acceptable vapor tube diameters to minimize the cooling capacity loss.

VAPOR LINE SIZING AND COOLING CAPACITY LOSS

Acceptable vapor line diameters provide adequate oil return to the compressor while avoiding excessive capacity loss. The suction line diameters shown in the chart below are acceptable for AC systems with Puron Advance™ refrigerant:

Table 4 – Vapor Line Sizing and Cooling Capacity Losses — Puron Advance™ Refrigerant 1-Stage Air Conditioner Applications

Unit Nominal Size (kBTU)	Maximum Liquid Line Diameters (In. OD)	Acceptable Vapor Line Diameters (In. OD)	Cooling Capacity Loss (%) Total Equivalent Line Length ft. (m) 1-Stage AC with Puron Advance™ Refrigerant								
			Total Equivalent Line Length (ft)								
			Standard Application		Long Line Application Requires Accessories						
			26-50 (7.9-15.2)	51-80 (15.5-24.4)	81-100 (24.7-30.5)	101-125 (30.8-38.1)	126-150 (38.4-45.7)	151-175 (46.0-53.3)	176-200 (53.6-61.0)	201-225 (61.3-68.6)	226-250 (68.9-76.2)
18	3/8	1/2	2	5	6	8	10	12	13	15	16
		5/8	1	2	3	4	4	5	6	7	7
		3/4	1	1	2	2	3	3	3	4	4
24	3/8	5/8	1	3	4	5	6	7	8	9	10
		3/4	1	1	2	3	3	4	4	5	5
		7/8	0	1	2	2	2	3	3	4	4
30	3/8	5/8	2	4	5	6	8	9	10	11	13
		3/4	1	2	2	3	4	4	5	6	6
		7/8	1	1	2	2	2	3	3	4	4
36	3/8	5/8	2	4	6	7	9	10	12	13	14
		3/4	1	2	3	3	4	5	6	6	7
		7/8	1	1	2	2	3	3	4	4	5
42	3/8	3/4	1	3	3	4	5	6	7	8	9
		7/8	1	2	2	3	3	4	4	5	6
		1 1/8	0	1	1	1	2	2	2	3	3
48	3/8	3/4	1	3	4	5	6	8	9	10	11
		7/8	1	2	2	3	4	4	5	6	6
		1 1/8	0	1	1	1	2	2	2	3	3
60	3/8	3/4	2	4	5	7	8	10	11	12	14
		7/8	1	2	3	4	5	6	6	7	8
		1 1/8	0	0	0	1	1	1	2	2	3
Applications in this area may be long line and may have height restrictions. See the Residential Piping and Long Line Guideline.											

ACCESSORIES

KIT NUMBER	KIT NAME	18	24	30	36	42	48	60
KSAFT0101AAA	FRZ THERM KIT	X	X	X	X	X	X	X
KAATD0101TDR	TIME DELAY KIT (90 second TDR)	X	X	X	X	X	X	X
KAATD0201TDR	TIME DELAY KIT (30 second TDR)	X	X	X	X	X	X	X
KSALA0301410	LOW AMBIENT COOLING KIT	X	X	X	X	X	X	X
KSALA1001AAA	MOTORMASTER KIT	X	X	X	X	X	X	X
KAAWS0101AAA	WINTER ST KIT	X	X	X	X	X	X	X
KSAHS2501AAA	HARD START KIT	X	X	X	X	X	X	X
KSAHS2701AAA*	HARD START KIT						X	X
KSACY0201AAA	CYCLE PROTR KIT	X	X	X	X	X	X	X
KSASF0201AAA	SPRT FEET KIT	X	X	X	X	X	X	X
KAALS0201LLS†	SOL VALVE KIT	X	X	X	X	X	X	X
KAALP0501PUR	LOW PRESSURE SW KIT	X	X	X	X	X	X	X
KAAHI0601PUR	HIGH PRESSURE SW KIT	X	X	X	X	X	X	X
KAACH1601AAA	CRANKCASE HEATER					X	X	X
KAACH1701AAA	CRANKCASE HEATER	X	X	X	X			
KSASH2301COP	SOUND BLKT KIT	X	X	X	X			
KSASH2401COP	SOUND BLKT KIT					X	X	X

*.Only use on models that have a “C” in position 15 of the 16 digit model number.
†.Do not use hard shutoff TXV with liquid solenoid valve

X = Accessory

ACCESSORY USAGE GUIDELINE

ACCESSORY	REQUIRED FOR LOW-AMBIENT COOLING APPLICATIONS (Below 55°F/12.8°C)	REQUIRED FOR LONG LINE APPLICATIONS*	REQUIRED FOR SEA COAST APPLICATIONS (Within 2 miles/3.22 km)
Ball Bearing Fan Motor	Standard	Standard	Standard
Compressor Start Assist Capacitor and Relay	Yes	Yes	No
Crankcase Heater	Yes	Yes	No
Evaporator Freeze Thermostat	Yes	No	No
Liquid Line Solenoid Valve	No	No	No
MotorMaster® Control or Low-Ambient Pressure Switch	Yes	No	No
Support Feet	Recommended	No	Recommended
Winter Start Control	Yes†	No	No

*.For tubing set lengths between 80 and 200 ft. (24 and 61 m) horizontal or 35 ft. (10.7 m) vertical differential (total equivalent length), refer to the Residential Split-System Long Line Application Guideline.
†.Required if Low Pressure Switch is factory or field installed.

Accessory Description and Usage

1. Ball-Bearing Fan Motor

A fan motor with ball bearings which permits speed reduction while maintaining bearing lubrication.

2. Compressor Start Assist - Capacitor and Relay

Start capacitor and relay gives a ”hard” boost to compressor motor at each start up.

Usage Guideline:

Required for single-phase scroll compressors in the following applications:

Long line

Low ambient cooling

Suggested for all single-phase compressors in areas with a history of low voltage problems.

3. Crankcase Heater

An electric resistance heater which mounts to the base of the compressor to keep the lubricant warm during off cycles. Improves compressor lubrication on restart and minimizes the chance of liquid slugging.

Usage Guideline:

Required in low ambient cooling applications.

Required in long line applications.

Suggested in all commercial applications.

4. Cycle Protector

The cycle protector is designed to prevent compressor short cycling. This control provides an approximate 5-minute delay after power to the compressor has been interrupted for any reason, including power outage, protector control trip, thermostat jiggling, or normal cycling.

5. Evaporator Freeze Thermostat

An SPST temperature-actuated switch that stops unit operation when evaporator reaches freeze-up conditions.

Usage Guideline:

Required when low ambient kit has been added.

6. Low-Ambient Pressure Switch Kit

A long life pressure switch which is mounted to outdoor unit service valve. It is designed to cycle the outdoor fan motor in order to maintain head pressure within normal operating limits (approximately 100 psig to 225 psig). The control will maintain working head pressure at low-ambient temperatures down to 0°F (-18°C) when properly installed and also using wind baffles. Instructions provided in accessory kit.

Usage Guideline:

A Low-Ambient Pressure Switch or MotorMasterr Low-Ambient Controller must be used when cooling operation is used at outdoor temperatures below 55°F (12.8°C).

7. MotorMaster Low-Ambient Controller

A fan-speed control device activated by a temperature sensor, designed to control condenser fan motor speed in response to the saturated, condensing temperature during operation in cooling mode only. For outdoor temperatures down to –10°F/–23.3°C), it maintains condensing temperature at 100°F ±10°F (37.8°C ±5.5°C).

Usage Guideline:

A MotorMaster Low Ambient Controller or Low-Ambient Pressure Switch must be used when cooling operation is used at outdoor temperatures below 55°F (12.8°C).

Suggested for all commercial applications.

8. Sound Blanket

Wraparound sound reducing cover for the compressor. Reduces the sound level of the compressor.

Usage Guideline:

Suggested when unit is installed closer than 15 ft (4.57 m) to quiet areas, bedrooms, etc.

Suggested when unit is installed between two houses less than 10 ft (3 m) apart.

Manufacturer reserves the right to change, at any time, specifications and designs without notice and without obligations.

Accessory Description and Usage Continued

9. Support Feet

Four or five stick-on plastic feet that raise the unit 4 in. (101.6 mm) above the mounting pad. This allows sand, dirt, and other debris to be flushed from the unit base, minimizing corrosion.

Usage Guideline:

Suggested in the following applications:

Coastal installations.

Windy areas or where debris is normally circulating.

Rooftop installations.

For improved sound ratings.

10. Time-Delay Relay

An SPST delay relay which briefly continues operation of indoor blower motor to provide additional cooling after the compressor cycles off.

NOTE: Most indoor unit controls include this feature. For those that do not, use the guideline below.

Usage Guideline:

For improved efficiency ratings for certain combinations of indoor and outdoor units. Refer to AHRI Directory of Certified Product Performance (AHRI Directory).

When a Time-Delay Relay (TDR) is called for in the AHRI Directory, use a 30 second TDR for MicroChannel Indoor units and use a 90 second TDR for Round Tube Plate Fin Indoor units.

11. Winter Start Control

This control is designed to alleviate nuisance opening of the low-pressure switch by bypassing it for the first 3 minutes of operation.

ELECTRICAL DATA

UNIT SIZE	V/PH	OPER VOLTS		COMPR		FAN	MCA	MAX FUSE or CKT BRK AMPS
		MAX	MIN	LRA	RLA	FLA		
18	208/230-1	253	197	41.5	8.3	0.40	10.8	15
24				59.0	8.2	0.75	12.3	20
30				67.0	12.5	0.60	16.2	25
36				82.5	13.5	0.60	17.5	30
42				109.0	14.7	1.40	19.8	30
48				126.0	18.1	1.20	23.8	40
60				157.0	23.7	1.50	31.1	50

FLA- Full Load Amps
LRA - Locked Rotor Amps
MCA- Minimum Circuit Amps
RLA- Rated Load Amps
NOTE:Control circuit is 24V on all units and requires external power source. Copper wire must be used from service disconnect to unit.
All motors/compressors contain internal overload protection.

NOTICE

If national or local codes require a GFCI protective device, the use of an HF type GFCI device is recommended. A GFCI device that meets HF requirements may reduce or eliminate nuisance tripping and equipment shutdown.

A–Weighted Sound Power (dBA) without Sound Shield

UNIT SIZE	STANDARD RATING	TYPICAL OCTAVE BAND SPECTRUM (without tone adjustment)						
		125	250	500	1000	2000	4000	8000
18	72	66	66	66	66	62	60	55
24	74	72	68	71	70	65	61	57
30	72	67	68	68	68	63	60	54
36	74	68	69	69	69	65	62	61
42	74	71	71	70	70	65	62	59
48	78	73	76	74	73	68	66	64
60	74	73	73	71	70	64	62	59

A–Weighted Sound Power (dBA) with Accessory Sound Shield

UNIT SIZE	STANDARD RATING	TYPICAL OCTAVE BAND SPECTRUM (without tone adjustment)						
		125	250	500	1000	2000	4000	8000
18	70	68	66	66	65	61	58	53
24	74	74	68	71	71	65	60	56
30	71	68	67	68	67	62	59	52
36	71	68	68	68	67	62	59	57
42	73	72	71	70	69	64	60	56
48	77	76	75	73	72	67	64	62
60	73	75	74	71	69	63	60	56

NOTE: Tested in compliance with AHRI 270 but not listed with AHRI.

Charging Subcooling (TXV-Type Expansion Device)

UNIT SIZE	REQUIRED SUBCOOLING (F)	Indoor
18	8	TXV
24	10	
30	9	
36	8	
42	8	
48	12	
60	10	

DIMENSIONS

UNIT	SERIES	ELECTRICAL CHARACTERISTICS				A		B		C		D		E		F		G		H		I		J		K		OPERATING WEIGHT		SHIPPING WEIGHT		SHIPPING LENGTH / WIDTH (Sq.)		SHIPPING HEIGHT	
						INCH	MM	INCH	MM	INCH	MM	INCH	MM	INCH	MM	INCH	MM	INCH	MM	INCH	MM	INCH	MM	INCH	MM	INCH	MM	Lbs	Kgs	Lbs	Kgs	INCH	MM	INCH	MM
GA4SA*518*0N	A	Y	N	N	N	23 1/8	587.3	28 1/4	718.0	3/4	19.1	4 7/16	113.0	18 1/16	459.0	7 13/16	197.9	5/16	7.9	3	76.2	11	279.4	10 3/4	273.1	13	330.2	109	49.4	129	58.5	24 1/8	612.7	31 1/16	788.9
GA4SA*524*0N	A	Y	N	N	N	25 3/4	654.0	31 11/16	804.3	3/4	19.1	4 7/16	113.0	21 1/4	539.9	9 1/8	231.3	5/16	7.9	3	76.2	13	330.2	12 1/2	317.5	13	330.2	120	54.4	140	63.5	26 3/4	679.9	34 7/16	875.2
GA4SA*530*0N	A	Y	N	N	N	31 3/16	792.5	31 11/16	804.3	3/4	19.1	6 9/16	166.1	24 11/16	626.3	9 1/8	231.3	5/16	7.9	3	76.2	15 3/4	400.1	15 1/4	387.4	12	304.8	145	65.8	166	75.3	32 3/16	817.9	34 7/16	875.2
GA4SA*536*0N	A	Y	N	N	N	31 3/16	792.5	28 1/4	718.0	7/8	22.2	6 9/16	166.1	24 11/16	626.3	9 1/8	231.3	5/16	7.9	3	76.2	15 1/4	387.4	14 3/4	374.7	10	254.0	133	60.3	153	69.4	32 3/16	817.9	31 1/16	788.9
GA4SA*542*0N	A	Y	N	N	N	31 3/16	792.5	38 7/16	977.1	7/8	22.2	6 9/16	166.1	24 11/16	626.3	9 1/8	231.3	5/16	7.9	3	76.2	16 3/4	425.5	16 1/4	412.8	15 1/2	393.7	171	77.6	193	87.5	32 3/16	817.9	41 1/4	1048.0
GA4SA*548**N	A	Y	N	N	N	31 3/16	792.5	28 1/4	718.0	7/8	22.2	6 9/16	166.1	24 11/16	626.3	9 1/8	231.3	5/16	7.9	3	76.2	15 3/4	400.1	16	406.4	13	330.2	172	77.8	192	86.9	32 3/16	817.9	31 1/16	788.9
GA4SA*560*0N	A	Y	N	N	N	31 3/16	792.5	31 11/16	804.3	7/8	22.2	6 9/16	166.1	24 11/16	626.3	9 1/8	231.3	5/16	7.9	3	76.2	16	406.4	16	406.4	22	558.8	184	83.5	204	92.5	32 3/16	817.9	34 7/16	875.2

208-230-1-60	208/230-3-60	460-3-60	575-3-60

Y=YES
N=NO

NOTES:

1. CENTER OF GRAVITY .

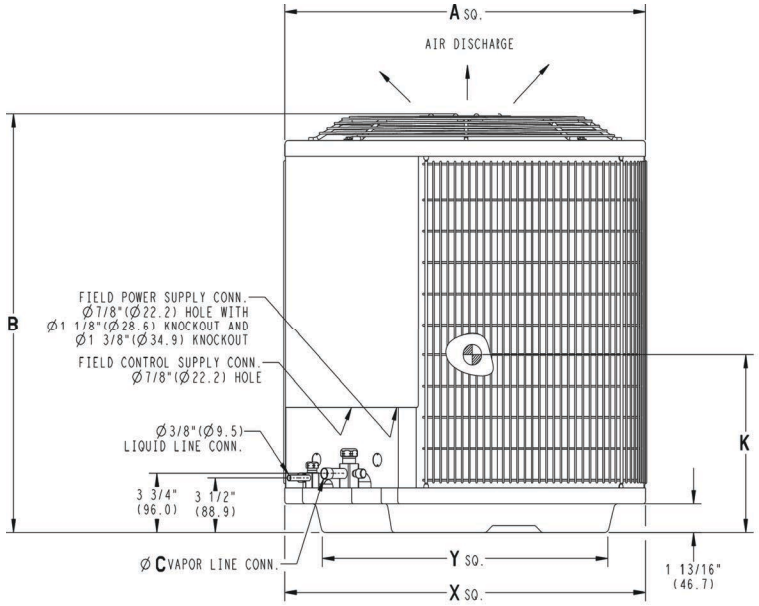

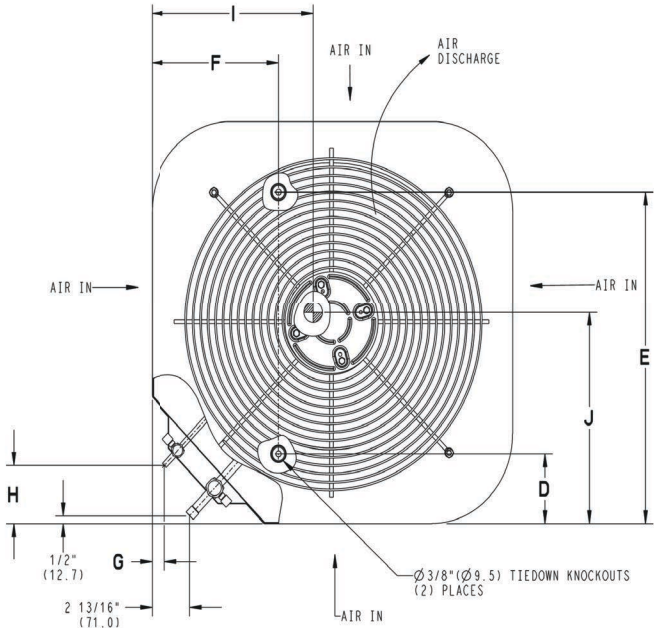

UNIT SIZE	"X" MINIMUM GROUND MOUNTING PAD APPLICATION DIMENSIONS		"Y" MINIMUM ROOF-TOP MOUNTING PAD APPLICATION DIMENSIONS	
18	23 1/8	587.3	17 7/8	454.6
24	25 3/4	654.0	20 7/16	518.5
30,36,42,48,60	31 3/16	792.5	22 15/16	583.2
-	35	889.0	26 3/4	679.7

NOTE: ALL DIMENSIONS IN INCH (MM)

U.S. ECCN: Not Subject to Regulation (N.S.R.)

SD6202-4 REV. -

Manufacturer reserves the right to change, at any time, specifications and designs without notice and without obligations.

CLEARANCES

Clearances (various examples)

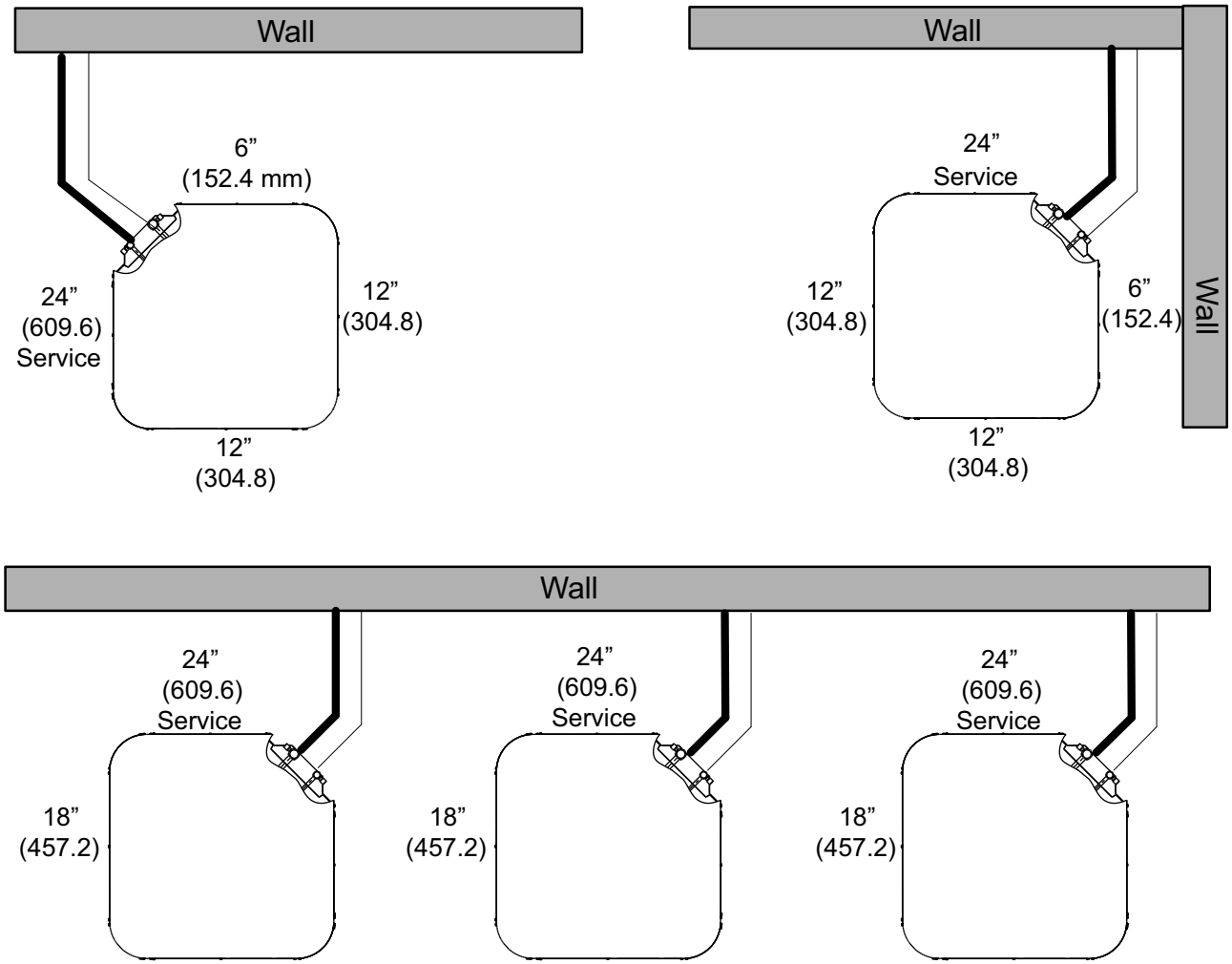

Note: Numbers in ( ) = mm
Allow 48” above unit

IMPORTANT: When installing multiple units in an alcove, roof well, or partially enclosed area, ensure there is adequate ventilation to prevent re-circulation of discharge air.

Manufacturer reserves the right to change, at any time, specifications and designs without notice and without obligations.

DETAILED COOLING CAPACITIES#

EVAPORATOR AIR		CONDENSER ENTERING AIR TEMPERATURES °F (°C)																	
		75 (23.9)			85 (29.4)			95 (35)			105 (40.6)			115 (46.1)			125 (51.7)		
CFM	EWB	Capacity MBtuh		Total Sys. kW**	Capacity MBtuh		Total Sys. kW**	Capacity MBtuh		Total Sys. kW**	Capacity MBtuh		Total Sys-tem kW**	Capacity MBtuh		Total Sys. kW**	Capacity MBtuh		Total Sys. kW**
		Total	Sens‡		Total	Sens‡		Total	Sens‡		Total	Sens‡		Total	Sens‡		Total	Sens‡	
GA4SAN518*0N Outdoor Section With CVAVA1917XM* Indoor Section																			
525	72 (22.2)	20.18	10.2	1.02	19.49	9.92	1.14	18.71	9.6	1.27	17.89	9.27	1.42	16.92	8.86	1.59	15.82	8.4	1.79
	67 (19.4)	18.6	12.5	1.03	17.93	12.19	1.14	17.19	11.84	1.27	16.4	11.49	1.42	15.48	11.05	1.59	14.46	10.6	1.79
	63 (17.2)††	17.27	12.04	1.03	16.58	11.68	1.15	15.89	11.35	1.28	15.1	10.95	1.42	14.25	10.54	1.59	13.25	10.04	1.79
	62 (16.7)	17.05	14.72	1.03	16.4	14.4	1.15	15.7	14.06	1.28	14.93	13.64	1.42	14.09	13.24	1.59	13.11	12.82	1.78
	57 (13.9)	16.43	16.43	1.03	15.9	15.9	1.15	15.34	15.34	1.28	14.69	14.69	1.42	13.97	13.97	1.59	13.19	13.19	1.78
645	72 (22.2)	20.78	10.77	1.06	20.06	10.48	1.18	19.25	10.15	1.32	18.37	9.79	1.47	17.36	9.38	1.64	16.22	8.92	1.84
	67 (19.4)	19.16	13.48	1.07	18.46	13.17	1.19	17.7	12.84	1.32	16.84	12.44	1.47	15.9	12.04	1.64	14.8	11.53	1.83
	63 (17.2)††	17.81	12.95	1.08	17.11	12.62	1.19	16.36	12.23	1.32	15.55	11.86	1.47	14.63	11.4	1.64	13.58	10.87	1.83
	62 (16.7)	17.6	16.2	1.08	16.93	15.94	1.19	16.21	15.59	1.32	15.59	15.59	1.47	14.81	14.81	1.64	13.92	13.92	1.83
	57 (13.9)	17.42	17.42	1.08	16.86	16.86	1.19	16.27	16.27	1.32	15.57	15.57	1.47	14.79	14.79	1.64	13.91	13.91	1.83
675	72 (22.2)	20.9	10.9	1.07	20.15	10.59	1.2	19.35	10.28	1.33	18.45	9.91	1.48	17.42	9.49	1.65	16.3	9.04	1.85
	67 (19.4)	19.27	13.71	1.08	18.56	13.41	1.2	17.79	13.07	1.33	16.93	12.68	1.48	15.98	12.27	1.65	14.88	11.76	1.85
	63 (17.2)††	17.91	13.16	1.09	17.19	12.8	1.2	16.45	12.45	1.34	15.64	12.07	1.48	14.68	11.63	1.66	13.64	11.08	1.85
	62 (16.7)	17.7	16.56	1.09	17.03	16.28	1.2	16.25	16.25	1.33	15.78	15.78	1.48	14.99	14.99	1.65	14.09	14.09	1.85
	57 (13.9)	17.65	17.65	1.09	17.08	17.08	1.2	16.43	16.43	1.33	15.76	15.76	1.48	14.97	14.97	1.65	14.08	14.08	1.85
GA4SAN524*0N Outdoor Section With CVAVA2414XM* Indoor Section																			
700	72 (22.2)	27.29	13.2	1.35	26.15	12.74	1.52	24.92	12.27	1.7	23.63	11.77	1.89	22.28	11.25	2.1	20.92	10.74	2.35
	67 (19.4)	24.99	16.02	1.37	23.94	15.54	1.53	22.8	15.03	1.7	21.61	14.52	1.89	20.38	14.09	2.11	19.08	13.39	2.34
	63 (17.2)††	23.18	15.47	1.39	22.19	14.98	1.54	21.14	14.49	1.7	20.02	13.97	1.89	18.85	13.42	2.1	17.65	12.86	2.34
	62 (16.7)	22.81	18.72	1.39	21.86	18.25	1.54	20.82	17.75	1.7	19.69	17.18	1.89	18.46	16.58	2.09	17.42	16.15	2.33
	57 (13.9)	21.94	21.94	1.39	21.15	21.15	1.54	20.32	20.32	1.7	19.42	19.42	1.89	18.43	18.43	2.09	17.49	17.49	2.34
800	72 (22.2)	27.83	13.63	1.39	26.64	13.17	1.56	25.36	12.68	1.73	23.99	12.16	1.93	22.61	11.64	2.15	21.17	11.08	2.39
	67 (19.4)	25.48	16.72	1.41	24.4	16.25	1.57	23.22	15.74	1.74	21.98	15.23	1.93	20.72	14.67	2.14	19.35	14.1	2.38
	63 (17.2)††	23.65	16.12	1.42	22.65	15.66	1.58	21.55	15.15	1.74	20.37	14.61	1.93	19.17	14.17	2.15	17.85	13.43	2.36
	62 (16.7)	23.29	19.76	1.42	22.3	19.28	1.58	21.2	18.75	1.74	20.05	18.23	1.93	19.2	17.5	2.14	18.03	18.03	2.38
	57 (13.9)	22.73	22.73	1.43	21.94	21.94	1.58	21.05	21.05	1.74	20.05	20.05	1.93	19.03	19.03	2.14	18.05	18.05	2.38
900	72 (22.2)	28.23	14.01	1.42	27.02	13.55	1.59	25.69	13.05	1.77	24.28	12.53	1.97	22.83	11.96	2.19	21.39	11.45	2.43
	67 (19.4)	25.87	17.38	1.44	24.75	16.91	1.61	23.53	16.4	1.78	22.24	15.87	1.97	20.89	15.3	2.18	19.53	14.71	2.42
	63 (17.2)††	24.04	16.76	1.46	23	16.28	1.61	21.85	15.76	1.78	20.62	15.2	1.97	19.36	14.61	2.18	18.08	14.06	2.42
	62 (16.7)	23.67	20.73	1.46	22.64	20.26	1.62	21.51	19.75	1.78	20.51	19.39	1.97	19.59	19.59	2.18	18.48	18.48	2.42
	57 (13.9)	23.43	23.43	1.46	22.58	22.58	1.62	21.64	21.64	1.78	20.6	20.6	1.97	19.55	19.55	2.18	18.46	18.46	2.42

Manufacturer reserves the right to change, at any time, specifications and designs without notice and without obligations.

DETAILED COOLING CAPACITIES# (CONTINUED)

EVAPORATOR AIR		CONDENSER ENTERING AIR TEMPERATURES °F (°C)																	
		75 (23.9)			85 (29.4)			95 (35)			105 (40.6)			115 (46.1)			125 (51.7)		
CFM	EWB	Capacity MBtuh		Total Sys. kW**	Capacity MBtuh		Total Sys. kW**	Capacity MBtuh		Total Sys. kW**	Capacity MBtuh		Total Sys-tem kW**	Capacity MBtuh		Total Sys. kW**	Capacity MBtuh		Total Sys. kW**
		Total	Sens‡		Total	Sens‡		Total	Sens‡		Total	Sens‡		Total	Sens‡		Total	Sens‡	
GA4SAN530*0N Outdoor Section With CVAVA3117XM* Indoor Section																			
875	72 (22.2)	34.43	16.25	1.74	32.99	15.71	1.93	31.44	15.13	2.15	29.76	14.52	2.39	28.03	13.87	2.67	26.24	13.21	3
	67 (19.4)	31.39	19.69	1.72	30.05	19.11	1.92	28.64	18.51	2.13	27.14	17.88	2.37	25.54	17.22	2.65	23.88	16.53	2.97
	63 (17.2)††	29.03	18.97	1.71	27.78	18.4	1.91	26.47	17.8	2.12	25.06	17.17	2.35	23.59	16.51	2.62	22.03	15.8	2.94
	62 (16.7)	28.56	23.02	1.71	27.34	22.45	1.9	26.04	21.84	2.11	24.66	21.21	2.35	23.22	20.62	2.62	21.72	19.94	2.94
	57 (13.9)	27.5	27.5	1.71	26.51	26.51	1.9	25.47	25.47	2.11	24.36	24.36	2.35	23.16	23.16	2.62	21.91	21.91	2.94
950	72 (22.2)	34.92	16.63	1.77	33.43	16.07	1.97	31.82	15.47	2.18	30.13	14.85	2.43	28.33	14.19	2.71	26.48	13.52	3.03
	67 (19.4)	31.83	20.27	1.76	30.46	19.69	1.95	29	19.08	2.16	27.45	18.44	2.41	25.82	17.78	2.68	24.1	17.07	3
	63 (17.2)††	29.44	19.52	1.75	28.17	18.94	1.94	26.81	18.32	2.15	25.36	17.68	2.39	23.84	17.02	2.66	22.24	16.3	2.98
	62 (16.7)	28.97	23.84	1.75	27.71	23.27	1.94	26.37	22.66	2.15	24.91	22.02	2.38	23.49	21.41	2.66	22.52	21.05	2.98
	57 (13.9)	28.16	28.16	1.74	27.15	27.15	1.93	26.08	26.08	2.14	24.92	24.92	2.38	23.62	23.62	2.66	22.37	22.37	2.98
1125	72 (22.2)	35.81	17.39	1.85	34.2	16.8	2.04	32.53	16.19	2.26	30.74	15.55	2.51	28.84	14.86	2.79	26.91	14.18	3.11
	67 (19.4)	32.63	21.52	1.83	31.19	20.93	2.03	29.64	20.3	2.24	28.01	19.66	2.48	26.28	18.96	2.76	24.48	18.23	3.08
	63 (17.2)††	30.2	20.68	1.82	28.85	20.08	2.02	27.4	19.45	2.23	25.87	18.8	2.47	24.26	18.08	2.74	22.6	17.38	3.06
	62 (16.7)	29.7	25.64	1.82	28.38	25.06	2.01	26.99	24.51	2.22	25.56	25.56	2.46	24.66	24.66	2.74	23.23	23.23	3.07
	57 (13.9)	29.51	29.51	1.82	28.42	28.42	2.01	27.24	27.24	2.23	25.96	25.96	2.47	24.64	24.64	2.74	23.21	23.21	3.07
GA4SAN536*0N Outdoor Section With CVAVA3721XM* Indoor Section																			
1050	72.0 (22.2)	41.66	20.79	2.44	39.92	20.12	2.7	38.09	19.41	2.99	36.15	18.68	3.31	34.09	17.9	3.69	31.91	17.09	4.12
	67.0 (19.4)	37.9	25.37	2.43	36.33	24.68	2.68	34.66	23.95	2.97	32.89	23.2	3.3	30.99	22.41	3.67	28.97	21.55	4.11
	63.0 (17.2)††	35.06	24.42	2.42	33.61	23.74	2.67	32.07	23.03	2.96	30.41	22.26	3.28	28.62	21.46	3.66	26.71	20.59	4.1
	62.0 (16.7)	34.46	29.85	2.42	33.03	29.17	2.67	31.5	28.43	2.95	29.86	27.66	3.28	28.15	26.93	3.66	26.87	26.87	4.1
	57.0 (13.9)	33.53	33.53	2.41	32.4	32.4	2.67	31.17	31.17	2.95	29.81	29.81	3.28	28.38	28.38	3.66	26.83	26.83	4.1
1200	72.0 (22.2)	42.54	21.59	2.52	40.7	20.89	2.77	38.77	20.16	3.06	36.76	19.41	3.39	34.62	18.62	3.76	32.35	17.78	4.2
	67.0 (19.4)	38.69	26.64	2.51	37.03	25.93	2.76	35.28	25.21	3.05	33.43	24.44	3.37	31.45	23.62	3.75	29.37	22.76	4.19
	63.0 (17.2)††	35.79	25.62	2.5	34.27	24.91	2.75	32.64	24.18	3.03	30.91	23.4	3.36	29.05	22.58	3.74	27.07	21.72	4.17
	62.0 (16.7)	35.16	31.66	2.49	33.67	30.97	2.75	32.08	30.24	3.03	30.45	29.73	3.36	29.37	29.37	3.74	27.72	27.72	4.18
	57.0 (13.9)	34.83	34.83	2.49	33.61	33.61	2.75	32.26	32.26	3.03	30.86	30.86	3.36	29.34	29.34	3.74	27.68	27.68	4.17
1300	72.0 (22.2)	43	22.07	2.57	41.1	21.35	2.83	39.13	20.62	3.11	37.08	19.85	3.44	34.88	19.05	3.81	32.57	18.2	4.25
	67.0 (19.4)	39.11	27.44	2.56	37.4	26.73	2.81	35.6	25.99	3.1	33.7	25.21	3.42	31.69	24.38	3.8	29.53	23.5	4.23
	63.0 (17.2)††	36.18	26.36	2.54	34.61	25.64	2.8	32.94	24.9	3.08	31.16	24.12	3.41	29.26	23.28	3.79	27.25	22.39	4.22
	62.0 (16.7)	35.55	32.81	2.54	34.01	32.13	2.8	32.46	31.69	3.08	31.48	31.48	3.41	29.91	29.91	3.79	28.19	28.19	4.23
	57.0 (13.9)	35.58	35.58	2.54	34.27	34.27	2.8	32.9	32.9	3.08	31.45	31.45	3.41	29.88	29.88	3.79	28.16	28.16	4.23

Manufacturer reserves the right to change, at any time, specifications and designs without notice and without obligations.

DETAILED COOLING CAPACITIES# (CONTINUED)

EVAPORATOR AIR		CONDENSER ENTERING AIR TEMPERATURES °F (°C)																	
		75 (23.9)			85 (29.4)			95 (35)			105 (40.6)			115 (46.1)			125 (51.7)		
CFM	EWB	Capacity MBtuh		Total Sys. kW**	Capacity MBtuh		Total Sys. kW**	Capacity MBtuh		Total Sys. kW**	Capacity MBtuh		Total Sys-tem kW**	Capacity MBtuh		Total Sys. kW**	Capacity MBtuh		Total Sys. kW**
		Total	Sens‡		Total	Sens‡		Total	Sens‡		Total	Sens‡		Total	Sens‡		Total	Sens‡	
GA4SAN542*0N Outdoor Section With CVAVA4217XM* Indoor Section																			
1200	72 (22.2)	47.75	23.97	2.45	45.93	23.24	2.7	44.01	22.47	2.99	41.95	21.65	3.32	39.77	20.8	3.69	37.38	19.87	4.11
	67 (19.4)	43.39	29	2.44	41.74	28.25	2.7	40	27.46	2.99	38.14	26.63	3.31	36.06	25.72	3.9	33.97	24.82	4.09
	63 (17.2)††	40.09	27.95	2.44	38.53	27.18	2.69	36.92	26.4	2.98	35.16	25.59	3.31	33.34	24.72	3.67	31.33	23.75	4.07
	62 (16.7)	39.38	33.91	2.44	37.87	33.16	2.69	36.28	32.37	2.98	34.59	31.54	3.3	32.75	30.65	3.67	30.79	29.82	4.09
	57 (13.9)	37.99	37.99	2.44	36.8	36.8	2.69	35.54	35.54	2.98	34.14	34.14	3.3	32.66	32.66	3.67	31	31	4.09
1400	72 (22.2)	48.97	24.97	2.53	47.03	24.2	2.78	44.97	23.39	3.08	42.84	22.55	3.41	40.52	21.66	3.78	38	20.7	4.2
	67 (19.4)	44.5	30.59	2.53	42.74	29.81	2.78	40.9	29	3.07	38.95	28.19	3.39	34.01	27.21	3.78	34.53	26.25	4.18
	63 (17.2)††	41.09	29.41	2.52	39.46	28.63	2.78	37.75	27.82	3.06	35.8	26.91	3.37	34.12	26.11	3.64	32.22	25.28	3.92
	62 (16.7)	40.38	36.16	2.52	38.77	35.38	2.77	37.09	34.57	3.06	35.33	33.74	3.38	33.38	32.86	3.76	32.17	32.17	4.18
	57 (13.9)	39.71	39.71	2.52	38.42	38.42	2.77	37.06	37.06	3.06	35.53	35.53	3.39	33.9	33.9	3.76	32.22	32.22	4.17
1575	72 (22.2)	49.79	25.75	2.6	47.75	24.96	2.86	45.64	24.14	3.15	43.41	23.27	3.48	40.99	22.35	3.86	38.43	21.39	4.27
	67 (19.4)	45.26	31.9	2.6	43.42	31.11	2.85	41.5	30.28	3.14	39.43	29.37	3.47	37.24	28.45	3.84	34.91	27.48	4.25
	63 (17.2)††	41.8	30.63	2.6	40.09	29.83	2.85	38.31	29.01	3.14	36.36	28.11	3.47	34.37	27.2	3.84	32.18	26.21	4.24
	62 (16.7)	41.06	38.03	2.59	39.41	37.29	2.85	37.67	36.48	3.14	35.88	35.97	3.46	34.85	34.85	3.84	32.95	32.95	4.25
	57 (13.9)	40.95	40.95	2.59	39.58	39.58	2.85	38.1	38.1	3.14	36.54	36.54	3.46	34.88	34.88	3.83	32.91	32.91	4.26
GA4SAN548N Outdoor Section With CVAVA6124XM*Indoor Section**																			
1400	72 (22.2)	56.4	27.57	2.88	54.08	26.71	3.19	51.53	25.78	3.54	48.72	24.76	3.94	45.6	23.65	4.39	42.18	22.44	4.9
	67 (19.4)	51.4	33.88	2.86	49.32	33.01	3.16	47	32.05	3.51	44.46	31.02	3.9	41.61	29.87	4.35	38.46	28.63	4.86
	63 (17.2)††	47.64	32.66	2.85	45.71	31.8	3.14	43.58	30.85	3.48	41.22	29.81	3.87	38.58	28.67	4.32	35.64	27.41	4.83
	62 (16.7)	46.75	39.99	2.85	44.85	39.11	3.14	42.76	38.17	3.48	40.44	37.14	3.87	38.48	38.48	4.32	36.04	36.04	4.83
	57 (13.9)	45.65	45.65	2.84	44.14	44.14	3.13	42.46	42.46	3.48	40.58	40.58	3.87	38.4	38.4	4.32	36.02	36.02	4.83
1600	72 (22.2)	57.49	28.7	2.97	55.07	27.82	3.28	52.38	26.86	3.63	49.45	25.82	4.04	46.25	24.68	4.48	42.69	23.44	4.99
	67 (19.4)	52.43	35.71	2.95	50.23	34.82	3.25	47.8	33.84	3.6	45.14	32.78	4	42.18	31.57	4.44	38.89	30.31	4.95
	63 (17.2)††	48.62	34.37	2.94	46.58	33.48	3.23	44.34	32.5	3.57	41.87	31.44	3.97	39.12	30.25	4.41	36.08	28.93	4.92
	62 (16.7)	47.69	42.56	2.93	45.69	41.68	3.23	43.56	40.85	3.57	42.08	42.08	3.97	39.76	39.76	4.42	37.17	37.17	4.93
	57 (13.9)	47.48	47.48	2.93	45.85	45.85	3.23	44.05	44.05	3.57	42.03	42.03	3.97	39.72	39.72	4.42	37.13	37.13	4.93
1800	72 (22.2)	58.32	29.72	3.06	55.79	28.82	3.37	53.02	27.85	3.73	49.98	26.78	4.13	46.68	25.62	4.58	43.01	24.35	5.08
	67 (19.4)	53.19	37.42	3.04	50.9	36.5	3.34	48.38	35.51	3.69	45.61	34.43	4.09	42.55	33.24	4.53	39.23	31.95	5.04
	63 (17.2)††	49.34	35.95	3.02	47.21	35.03	3.32	44.89	34.04	3.66	42.32	32.95	4.06	39.47	31.75	4.5	36.32	30.45	5.01
	62 (16.7)	48.44	45.1	3.02	46.24	46.24	3.32	45.37	45.37	3.67	43.21	43.21	4.06	40.77	40.77	4.52	38.06	38.06	5.03
	57 (13.9)	48.98	48.98	3.02	47.25	47.25	3.32	45.32	45.32	3.67	43.16	43.16	4.06	40.72	40.72	4.52	38.04	38.04	5.03

DETAILED COOLING CAPACITIES# (CONTINUED)

EVAPORATOR AIR		CONDENSER ENTERING AIR TEMPERATURES °F (°C)																	
		75 (23.9)			85 (29.4)			95 (35)			105 (40.6)			115 (46.1)			125 (51.7)		
CFM	EWB	Capacity MBtuh		Total Sys. kW**	Capacity MBtuh		Total Sys. kW**	Capacity MBtuh		Total Sys. kW**	Capacity MBtuh		Total Sys-tem kW**	Capacity MBtuh		Total Sys. kW**	Capacity MBtuh		Total Sys. kW**
		Total	Sens‡		Total	Sens‡		Total	Sens‡		Total	Sens‡		Total	Sens‡		Total	Sens‡	
GA4SAN560*0N Outdoor Section With CVAVA6124XM*Indoor Section																			
1800	72 (22.2)	69.39	35.02	3.58	66.53	33.92	3.95	63.44	32.75	4.37	60.11	31.49	4.86	56.5	30.14	5.4	52.6	28.68	6.02
	67 (19.4)	63.39	43.13	3.54	60.8	41.99	3.91	58	40.74	4.33	54.96	39.45	4.81	51.6	37.99	5.35	48.01	35.8	5.97
	63 (17.2)††	58.81	41.61	3.52	56.43	40.48	3.88	53.84	39.26	4.3	51.01	37.95	4.77	47.86	36.46	5.31	44.56	35.04	5.94
	62 (16.7)	57.71	50.84	3.52	55.38	49.71	3.88	52.84	48.53	4.29	50.03	47.17	4.77	47.39	46.79	5.31	45.01	45.01	5.95
	57 (13.9)	56.38	56.38	3.51	54.49	54.49	3.87	52.44	52.44	4.29	50.17	50.17	4.77	47.6	47.6	5.31	44.89	44.89	5.94
2000	72 (22.2)	70.39	36.1	3.67	67.42	34.97	4.04	64.22	33.76	4.47	60.67	32.43	4.95	57.01	31.06	5.49	52.93	29.58	6.11
	67 (19.4)	64.34	44.84	3.63	61.65	43.67	4	58.74	42.42	4.42	55.54	41.05	4.89	52.18	39.65	5.44	48.47	38.09	6.06
	63 (17.2)††	59.73	43.21	3.61	57.25	42.04	3.97	54.56	40.81	4.38	51.64	39.46	4.86	48.45	38.07	5.4	44.98	36.49	6.02
	62 (16.7)	58.6	53.26	3.6	56.17	52.12	3.96	53.54	50.92	4.38	51.54	51.54	4.86	48.91	48.91	5.41	46	46	6.04
	57 (13.9)	58.04	58.04	3.6	55.93	55.93	3.96	53.89	53.89	4.38	51.51	51.51	4.86	48.76	48.76	5.41	45.93	45.93	6.03
2250	72 (22.2)	71.35	37.3	3.78	68.26	36.14	4.15	64.95	34.91	4.58	61.38	33.6	5.06	57.56	32.2	5.6	53.34	30.65	6.22
	67 (19.4)	65.26	46.83	3.74	62.46	45.64	4.11	59.43	44.37	4.53	56.16	42.99	5.01	52.62	41.5	5.55	48.81	40.01	6.17
	63 (17.2)††	60.62	45.06	3.71	58.03	43.87	4.08	55.23	42.61	4.49	52.2	41.27	4.97	48.9	39.75	5.51	45.32	38.25	6.13
	62 (16.7)	59.45	56.11	3.71	56.95	55	4.07	55.47	55.47	4.5	52.94	52.94	4.98	50.12	50.12	5.53	47.06	47.06	6.15
	57 (13.9)	59.82	59.82	3.71	57.71	57.71	4.08	55.41	55.41	4.5	52.88	52.88	4.98	50.1	50.1	5.52	47.01	47.01	6.15

{ Total and sensible capacities are net capacities. Blower motor heat has been subtracted.

} Sensible capacities shown are based on 80°F (27°C) entering air at the indoor coil. For sensible capacities at other than 80°F (27°C), deduct 835 Btuh (245 kW) per 1000 CFM (480 L/S) of indoor coil air for each degree below 80°F (27°C), or add 835 Btuh (245 kW) per 1000 CFM (480 L/S) of indoor coil air per degree above 80°F (27°C).

Detailed cooling capacities are based on indoor and outdoor unit at the same elevation per AHRI standard 210/240-2024. If additional tubing length and/or indoor unit is located above outdoor unit, a slight variation in capacity may occur.

** System kw is total of indoor and outdoor unit kilowatts.

†† At TVA rating indoor condition (75°F edb/63°F ewb). All other indoor air temperatures are at 80°F edb.

NOTE: When the required data falls between the published data, interpolation may be performed. Extrapolation is not an acceptable practice.

EWB — Entering Wet Bulb

Manufacturer reserves the right to change, at any time, specifications and designs without notice and without obligations.

CONDENSER ONLY RATINGS

SST °F (°C)		CONDENSER ENTERING AIR TEMPERATURES °F (°C)						
		55.0 (12.8)	65.0 (18.3)	75.0 (23.9)	85.0 (29.4)	95.0 (35.0)	105.0 (40.6)	115.0 (46.1)
GA4SAN518*0N								
30.0 (-1.1)	TCG	14.69	13.73	12.87	12.07	11.27	10.43	9.53
	SDT	71.67	81.13	90.70	100.20	109.73	119.40	128.94
	KW	0.62	0.71	0.8	0.9	1.02	1.16	1.31
35.0 (1.7)	TCG	16.16	15.17	14.27	13.41	12.57	11.67	10.7
	SDT	72.82	82.28	91.80	101.41	110.91	120.46	129.84
	KW	0.62	0.71	0.8	0.91	1.03	1.16	1.32
40.0 (4.4)	TCG	17.71	16.7	15.77	14.87	13.96	13	11.97
	SDT	74.03	83.49	92.99	102.57	112.05	121.55	130.88
	KW	0.62	0.71	0.8	0.91	1.03	1.17	1.32
45.0 (7.2)	TCG	19.36	18.33	17.37	16.43	15.47	14.44	13.29
	SDT	75.25	84.72	94.24	103.71	113.24	122.71	131.27
	KW	0.61	0.7	0.8	0.91	1.03	1.17	1.32
50.0 (10.0)	TCG	21.12	20.07	19.08	18.1	17.08	15.98	14.8
	SDT	76.54	86.03	95.53	105.00	114.47	124.00	132.97
	KW	0.6	0.7	0.8	0.91	1.04	1.18	1.33
55.0 (12.8)	TCG	22.98	21.92	20.9	19.88	18.8	17.64	16.38
	SDT	77.92	87.40	96.90	106.35	115.76	125.25	134.21
	KW	0.6	0.69	0.8	0.91	1.04	1.18	1.34
GA4SAN524*0N								
30.0 (-1.1)	TCG	19.64	18.98	18.08	17.05	15.94	14.74	13.58
	SDT	70.95	80.71	90.34	99.78	109.17	118.75	128.08
	KW	0.84	0.97	1.09	1.23	1.37	1.54	1.74
35.0 (1.7)	TCG	21.73	20.95	19.95	18.81	17.62	16.37	15.03
	SDT	72.13	81.89	91.47	100.94	110.19	119.56	128.56
	KW	0.83	0.96	1.09	1.23	1.38	1.55	1.73
40.0 (4.4)	TCG	23.95	23.04	21.94	20.69	19.38	18.06	16.64
	SDT	73.45	83.11	92.63	102.06	111.38	120.57	129.50
	KW	0.82	0.95	1.09	1.23	1.39	1.55	1.74
45.0 (7.2)	TCG	26.31	25.28	24.04	22.7	21.28	19.83	18.34
	SDT	74.78	84.39	93.90	103.21	112.49	121.76	130.52
	KW	0.8	0.94	1.08	1.23	1.39	1.56	1.75
50.0 (10.0)	TCG	28.81	27.63	26.28	24.81	23.28	21.72	20.16
	SDT	76.19	85.79	95.15	104.42	113.63	122.85	131.91
	KW	0.77	0.92	1.07	1.23	1.39	1.57	1.77
55.0 (12.8)	TCG	31.46	30.14	28.64	27.05	25.4	23.72	22.04
	SDT	77.57	87.08	96.48	105.67	114.80	123.99	133.04
	KW	0.74	0.9	1.06	1.22	1.39	1.58	1.78

Manufacturer reserves the right to change, at any time, specifications and designs without notice and without obligations.

CONDENSER ONLY RATINGS (CONTINUED)

SST °F (°C)		CONDENSER ENTERING AIR TEMPERATURES °F (°C)						
		55.0 (12.8)	65.0 (18.3)	75.0 (23.9)	85.0 (29.4)	95.0 (35.0)	105.0 (40.6)	115.0 (46.1)
GA4SAN530*0N								
30.0 (-1.1)	TCG	24.86	23.73	22.48	21.17	19.81	18.39	16.96
	SDT	70.65	80.17	89.66	99.05	108.41	117.82	127.12
	KW	0.98	1.15	1.32	1.49	1.68	1.89	2.14
35.0 (1.7)	TCG	27.44	26.18	24.83	23.41	21.92	20.39	18.85
	SDT	71.88	81.42	90.81	100.14	109.51	118.81	128.05
	KW	0.99	1.16	1.32	1.5	1.69	1.91	2.16
40.0 (4.4)	TCG	30.2	28.83	27.36	25.82	24.21	22.56	20.93
	SDT	73.22	82.67	92.04	101.32	110.64	119.88	128.91
	KW	0.99	1.16	1.33	1.51	1.71	1.93	2.18
45.0 (7.2)	TCG	33.17	31.68	30.1	28.42	26.67	24.89	23.09
	SDT	74.73	84.10	93.32	102.58	111.85	121.06	130.15
	KW	1	1.17	1.35	1.53	1.73	1.96	2.21
50.0 (10.0)	TCG	36.37	34.75	33.02	31.21	29.32	27.39	25.44
	SDT	76.29	85.54	94.75	103.95	113.17	122.31	131.35
	KW	1.02	1.19	1.36	1.55	1.75	1.98	2.24
55.0 (12.8)	TCG	39.81	38.03	36.15	34.19	32.16	30.07	27.95
	SDT	77.95	87.14	96.35	105.45	114.56	123.62	132.62
	KW	1.03	1.2	1.38	1.57	1.78	2.01	2.28
GA4SAN536*0N								
30.0 (-1.1)	TCG	27.53	26.47	25.23	23.86	22.41	20.77	19.07
	SDT	72.53	81.92	91.51	100.96	110.19	119.57	128.79
	KW	1.22	1.39	1.57	1.77	2	2.27	2.58
35.0 (1.7)	TCG	30.45	29.24	27.87	26.4	24.81	23.11	21.29
	SDT	73.96	83.21	92.75	102.09	111.42	120.68	129.94
	KW	1.22	1.39	1.58	1.78	2.01	2.28	2.59
40.0 (4.4)	TCG	33.62	32.22	30.71	29.11	27.4	25.59	23.71
	SDT	75.43	84.77	94.09	103.43	112.70	121.91	130.97
	KW	1.23	1.4	1.59	1.79	2.03	2.29	2.6
45.0 (7.2)	TCG	37.04	35.45	33.78	32.03	30.18	28.26	26.24
	SDT	76.93	86.32	95.67	104.89	114.06	123.20	132.16
	KW	1.24	1.41	1.6	1.81	2.04	2.31	2.61
50.0 (10.0)	TCG	40.72	38.93	37.08	35.17	33.17	31.09	28.92
	SDT	78.95	88.01	97.21	106.34	115.50	124.61	133.66
	KW	1.25	1.42	1.61	1.82	2.06	2.33	2.63
55.0 (12.8)	TCG	44.65	42.67	40.62	38.52	36.36	34.12	31.81
	SDT	80.77	89.66	98.88	108.02	117.03	126.00	134.98
	KW	1.25	1.43	1.63	1.84	2.07	2.34	2.65

Manufacturer reserves the right to change, at any time, specifications and designs without notice and without obligations.

CONDENSER ONLY RATINGS (CONTINUED)

SST °F (°C)		CONDENSER ENTERING AIR TEMPERATURES °F (°C)						
		55.0 (12.8)	65.0 (18.3)	75.0 (23.9)	85.0 (29.4)	95.0 (35.0)	105.0 (40.6)	115.0 (46.1)
GA4SAN542*0N								
30.0 (-1.1)	TCG	33.75	32.15	30.57	29	27.34	25.63	23.82
	SDT	70.60	80.12	89.66	99.11	108.67	118.12	127.45
	KW	1.51	1.7	1.91	2.15	2.42	2.73	3.06
35.0 (1.7)	TCG	37.32	35.57	33.84	32.13	30.36	28.46	26.54
	SDT	71.84	81.26	90.78	100.18	109.65	119.18	128.36
	KW	1.52	1.7	1.91	2.15	2.43	2.74	3.08
40.0 (4.4)	TCG	41.17	39.26	37.38	35.5	33.57	31.54	29.48
	SDT	73.15	82.49	91.92	101.34	110.75	120.19	129.25
	KW	1.52	1.71	1.92	2.16	2.44	2.75	3.09
45.0 (7.2)	TCG	45.29	43.2	41.16	39.12	37.01	34.84	32.59
	SDT	74.59	83.94	93.22	102.53	111.94	121.22	130.35
	KW	1.52	1.71	1.93	2.17	2.45	2.76	3.11
50.0 (10.0)	TCG	49.71	47.45	45.23	42.99	40.75	38.35	35.88
	SDT	76.09	85.27	94.52	103.84	112.94	122.44	131.61
	KW	1.53	1.72	1.93	2.18	2.46	2.78	3.13
55.0 (12.8)	TCG	54.48	52	49.55	47.12	44.65	42.09	39.41
	SDT	77.65	86.74	96.05	105.25	114.50	123.71	132.83
	KW	1.54	1.72	1.94	2.19	2.48	2.8	3.15
GA4SAN548N**								
30.0 (-1.1)	TCG	39.25	37.39	35.56	33.71	31.67	29.44	26.99
	SDT	71.90	81.20	90.56	99.94	109.23	118.48	127.64
	KW	1.78	1.97	2.19	2.46	2.78	3.16	3.6
35.0 (1.7)	TCG	43.18	41.22	39.28	37.26	35.09	32.7	30.04
	SDT	73.39	82.64	91.97	101.29	110.54	119.72	128.79
	KW	1.79	1.98	2.21	2.48	2.8	3.18	3.61
40.0 (4.4)	TCG	47.44	45.35	43.25	41.05	38.73	36.14	33.31
	SDT	75.01	84.21	93.45	102.69	111.91	121.04	130.08
	KW	1.78	1.98	2.22	2.5	2.82	3.2	3.64
45.0 (7.2)	TCG	52.03	49.78	47.53	45.13	42.56	39.86	36.74
	SDT	76.76	85.89	95.09	104.24	113.37	122.47	131.40
	KW	1.78	1.99	2.24	2.52	2.85	3.24	3.67
50.0 (10.0)	TCG	56.95	54.54	52.07	49.47	46.68	43.67	40.34
	SDT	78.62	87.71	96.83	105.92	114.96	123.94	132.77
	KW	1.78	2	2.26	2.55	2.89	3.27	3.7
55.0 (12.8)	TCG	62.26	59.65	56.93	54.1	50.73	47.75	44.18
	SDT	80.70	89.74	98.73	107.73	116.55	125.50	134.26
	KW	1.78	2.02	2.28	2.58	2.92	3.31	3.75

Manufacturer reserves the right to change, at any time, specifications and designs without notice and without obligations.

CONDENSER ONLY RATINGS (CONTINUED)

SST °F (°C)		CONDENSER ENTERING AIR TEMPERATURES °F (°C)						
		55.0 (12.8)	65.0 (18.3)	75.0 (23.9)	85.0 (29.4)	95.0 (35.0)	105.0 (40.6)	115.0 (46.1)
GA4SAN560*0N								
30.0 (-1.1)	TCG	48.03	46.13	44.07	41.82	39.32	36.59	33.58
	SDT	71.67	81.07	90.46	99.81	109.10	118.33	127.48
	KW	2.15	2.39	2.68	3.02	3.41	3.86	4.39
35.0 (1.7)	TCG	53.16	51.04	48.78	46.32	43.63	40.65	37.56
	SDT	73.21	82.54	91.87	101.14	110.37	119.55	128.64
	KW	2.15	2.4	2.7	3.03	3.43	3.88	4.41
40.0 (4.4)	TCG	58.63	56.24	53.75	51.08	48.19	45.01	41.75
	SDT	74.83	84.09	93.33	102.55	111.76	120.83	129.93
	KW	2.16	2.42	2.72	3.06	3.45	3.9	4.43
45.0 (7.2)	TCG	64.42	61.76	59	56.07	53	49.66	46.11
	SDT	76.61	85.74	94.89	104.02	113.15	122.20	131.25
	KW	2.17	2.44	2.74	3.09	3.49	3.95	4.47
50.0 (10.0)	TCG	70.5	67.56	64.52	61.33	58	54.46	50.68
	SDT	78.45	87.48	96.55	105.61	114.66	123.65	132.58
	KW	2.18	2.46	2.77	3.13	3.53	3.99	4.52
55.0 (12.8)	TCG	76.87	73.6	70.29	66.84	63.19	59.38	55.39
	SDT	80.41	89.42	98.37	107.30	116.24	125.14	134.01
	KW	2.21	2.5	2.82	3.18	3.58	4.05	4.58

KW- Outdoor Unit Kilowatts Only.
SDT-Saturated Temperature Leaving Compressor (°F)
SST-Saturated Temperature Entering Compressor (°F/°C)
TCG-Gross Cooling Capacity (1000 Btuh)

GUIDE SPECIFICATIONS
GENERAL

Air-cooled, split-system air conditioner
GA4SAN5
1.5 to 5 nominal tons

System Description

Outdoor-mounted, air-cooled, split-system air conditioner unit suitable for ground or rooftop installation. Unit consists of a hermetic compressor, an air-cooled coil, propeller-type condenser fan, and a control box. Unit will discharge supply air upward as shown on contract drawings. Unit will be used in a refrigeration circuit to match up to a packaged fan coil or coil unit.

Quality Assurance

- Unit will be rated in accordance with the latest edition of AHRI Standard 210/240.
- Unit will be certified for capacity and efficiency, and listed in AHRI directory.
- Unit construction will comply with latest edition of ANSI/ ASHRAE and with NEC.
- Unit will be constructed in accordance with UL standards and will carry the UL label of approval. Unit will have c-UL-us approval.
- Unit cabinet will be capable of withstanding Federal Test Method Standard No. 141 (Method 6061) 500-hr salt spray test.
- Air-cooled condenser coils will be leak tested at 150 psig and pressure tested at 470 psig.
- Unit constructed in ISO9001 approved facility.

Delivery, Storage, and Handling

- Unit will be shipped as single package only and is stored and handled per unit manufacturer's recommendations.

Warranty (for inclusion by specifying engineer)

- U.S. and Canada only.

PRODUCTS

Equipment

Factory assembled, single piece, air-cooled air conditioner unit. Contained within the unit enclosure is all factory wiring, piping, controls, compressor, refrigerant charge Puron Advance™ (R-454B), and special features required prior to field start-up.

Unit Cabinet

- Unit cabinet will be constructed of galvanized steel, bonderized, and coated with pre-paint.
  Available with dense grill only.

Fans

- Condenser fan will be direct-drive propeller type, discharging air upward.
- Condenser fan motors will be totally enclosed, 1-phase type with class B insulation and permanently lubricated bearings. Shafts will be corrosion resistant.
- Fan blades will be statically and dynamically balanced.
- Condenser fan openings will be equipped with coated steel wire safety guards.

Compressor

- Compressor will be hermetically sealed.
- Compressor will be mounted on rubber vibration isolators.

Condenser Coil

- Condenser coil will be air cooled.
- Coil will be constructed of aluminum fins mechanically bonded to copper or aluminum tubes which are then cleaned, dehydrated, and sealed.

Refrigeration Components

- Refrigeration circuit components will include liquid-line shutoff valve with sweat connections, vapor-line shutoff valve with sweat connections, system charge of Puron Advance™ (R-454B) refrigerant, and compressor oil.
- Unit will be shipped with filter drier for Puron Advance™ (R-454B) refrigerant.

Operating Characteristics

- The capacity of the unit will meet or exceed _____ Btuh at a suction temperature of _____ °F/°C. The power consumption at full load will not exceed _____ kW.
- Combination of the unit and the evaporator or fan coil unit will have a total net cooling capacity of _____ Btuh or greater at conditions of _____ CFM entering air temperature at the evaporator at _____ °F/°C wet bulb and _____ °F/°C dry bulb, and air entering the unit at _____ °F/°C.
- The system will have a SEER2 of _____ Btuh/watt or greater at DOE conditions.

Electrical Requirements

- Nominal unit electrical characteristics will be _____ v, single phase, 60 Hz. The unit will be capable of satisfactory operation within voltage limits of _____ v to _____ v.
- Nominal unit electrical characteristics will be _____ v, three phase, 60 Hz. The unit will be capable of satisfactory operation within voltage limits of _____ v to _____ v.
- Unit electrical power will be single point connection.
- Control circuit will be 24v.

Special Features

- Refer to section of this literature identifying accessories and descriptions for specific features and available enhancements.

Manufacturer reserves the right to change, at any time, specifications and designs without notice and without obligations.

System Design Summary

1. Intended for outdoor installation with free air inlet and outlet. Outdoor fan external static pressure available is less than 0.01-IN W.C.
2. Minimum outdoor operating air temperature without low-ambient operation accessory is 55°F (12.8°C).
3. Maximum outdoor operating air temperature is 115°F (46.1°C).
4. For reliable operation, unit should be level in all horizontal planes.
5. For interconnecting refrigerant tube lengths greater than 80 ft (23.4 m) and/or 35 ft (10.7 m) vertical differential, consult Residential Piping and Long Line Guideline and Service Manual available from equipment distributor.
6. If any refrigerant tubing is buried, provide a 6 in. (152.4 mm) vertical rise to the valve connections at the unit. Refrigerant tubing lengths up to 36 in. (914.4 mm) may be buried without further consideration. Do not bury refrigerant lines longer than 36 in. (914.4 mm).
7. Use only copper wire for electric connection at unit. Aluminum and clad aluminum are not acceptable for the type of connector provided.
8. Factory-supplied filter drier must be installed.
9. If national or local codes require a GFCI protective device, the use of an HF type GFCI device is recommended. A GFCI device that meets HF requirements may reduce or eliminate nuisance tripping and equipment shutdown.

Manufacturer reserves the right to change, at any time, specifications and designs without notice and without obligations.

© 2026 Carrier. All rights reserved.

Manufacturer reserves the right to change, at any time, specifications and designs without notice and without obligations.