PG9YAB

4−WAY MULTIPOISE FIXED SPEED CONDENSING GAS FURNACE

Service Guide

NOTE: Read the entire instruction manual before starting the installation. .

⚠ WARNING

ELECTRICAL SHOCK, FIRE, OR EXPLOSION HAZARD

Failure to follow warnings could result in personal injury, death, or property damage.

Before servicing, disconnect all electrical power and gas supply to furnace. Lockout and tag with appropriate label.

When servicing controls, label all wires prior to disconnecting. Reconnect wires correctly.

Verify proper operation after servicing.

⚠ WARNING

ELECTRICAL SHOCK, FIRE OR EXPLOSION HAZARD

Failure to follow this warning could result in property damage, personal injury, or death.

The ability to properly perform maintenance on this equipment requires certain expertise, mechanical skills, tools, and equipment. If you do not possess these, do not attempt to perform any maintenance on this equipment other than those procedures recommended in the User's Manual.

TABLE OF CONTENTS

PAGE

SAFETY CONSIDERATIONS 1
GENERAL 2
ELECTROSTATIC DISCHARGE (ESD) PRECAUTIONS . . . 2
CARE AND MAINTENANCE 3
Cleaning and/or Replacing Air Filter 3
Blower Motor and Wheel Maintenance 3
Cleaning Burners 4
Cleaning Heat Exchangers 15
Primary Heat Exchangers 15
Secondary Heat Exchangers 15
Flushing Collector Box and Drainage System 15
Servicing Hot Surface Igniter 16
Electrical Controls And Wiring 18
Checking Heat Tape Operation (If Applicable) 18
Winterizing 18
WIRING DIAGRAM 18
TROUBLESHOOTING 18

SAFETY CONSIDERATIONS

Recognize safety information. This is the safety-alert symbol. ⚠ When you see this symbol on the furnace and in instructions or manuals, be alert to the potential for personal injury.

Understand the signal words DANGER, WARNING, CAUTION, and NOTE. These words are used with the safety-alert symbol. DANGER identifies the most serious hazards which will result in severe personal injury or death. WARNING signifies hazards which could result in personal injury or death. CAUTION is used to identify unsafe practices which would result in minor personal injury or product and property damage. NOTE is used to highlight suggestions which will result in enhanced installation, reliability, or operation.

⚠ WARNING

FIRE / EXPLOSION HAZARD

Failure to follow this warning could cause personal injury, death, or property damage.

Never store anything on, near, or in contact with the furnace, such as:

1. Spray or aerosol cans, rags, brooms, dust mops, vacuum cleaners, or other cleaning tools.

2. Soap powders, bleaches, waxes or other cleaning compounds, plastic or plastic containers, gasoline, kerosene, cigarette lighter fluid, dry cleaning fluids, or other volatile fluids.

3. Paint thinners and other painting compounds, paper bags, or other paper products.

PG9YAB

Installing and servicing heating equipment can be hazardous due to gas and electrical components. **Only trained and qualified service agency personnel should install, repair, or service heating equipment. Untrained personnel can perform basic maintenance functions described in User's Information Manual such as cleaning and replacing air filters.** All other operations must be performed by trained and qualified service agency personnel. When working on heating equipment, observe precautions in the literature, on tags, and on labels attached to or shipped with the unit and other safety precautions that may apply.

Follow all safety codes including the National Fuel Gas Code (NFGC) NFPA 54-2006/ANSI Z223.1-2006 in the USA; National Standard of Canada, Natural Gas and Propane Installation Code CSA B149.1 (NSCNGPIC) in Canada; and the Installation Standards, Warm Air Heating and Air Conditioning Systems (NFPA 90B) ANSI/NFPA 90B. Wear safety glasses and work gloves. Have a fire extinguisher available during start-up and adjustment procedures and service calls.

⚠ CAUTION

ELECTRICAL SHOCK AND UNIT DAMAGE HAZARD

Failure to follow this caution may result in personal injury or damage to furnace.

Label all wires prior to disconnection when servicing controls. Wiring errors can cause improper and dangerous operation.

GENERAL

This furnace van be installed as a **direct vent (2-pipe) or non-direct vent (1-pipe)** condensing gas furnace. These instructions are written as if the furnace is installed in an upflow application. An upflow furnace application is where the blower is located below the combustion and controls section of the furnace, and conditioned air is discharged upward. Since this furnace can be installed in any of the 4 positions shown in Fig. 1, you may need to revise your orientation to component location accordingly.

ELECTROSTATIC DISCHARGE (ESD) PRECAUTIONS

⚠ CAUTION

UNIT DAMAGE HAZARD

Failure to follow this caution may damage furnace components.

Electrostatic discharge can affect electronic components. Take precautions during furnace installation and servicing to protect the furnace electronic control. Precautions will prevent electrostatic discharges from personnel and hand tools which are held during the procedure. These precautions will help to avoid exposing the control to electrostatic discharge by putting the furnace, the control, and the person at the same electrostatic potential.

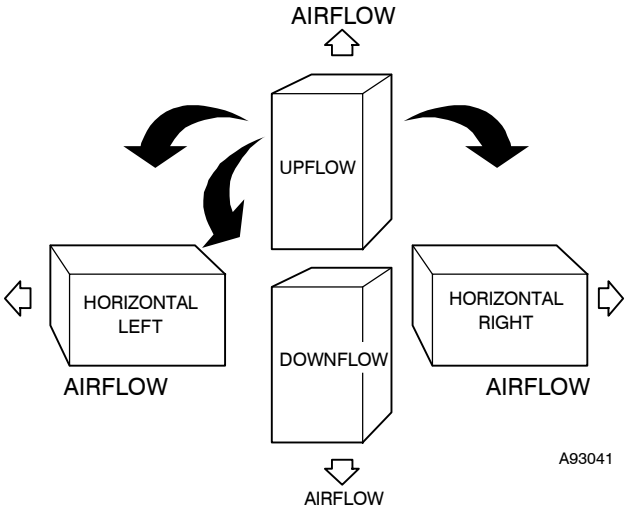

Fig. 1 - Multipoise Orientations

1. Disconnect all power to the furnace. DO NOT TOUCH THE CONTROL OR ANY WIRE CONNECTED TO THE CONTROL PRIOR TO DISCHARGING YOUR BODY'S ELECTROSTATIC CHARGE TO GROUND.
2. Firmly touch a clean, unpainted, metal surface of the furnace chassis which is close to the control. Tools held in a person's hand during grounding will be satisfactorily discharged.
3. After touching the chassis you may proceed to service the control or connecting wires as long as you do nothing that recharges your body with static electricity (for example; DO NOT move or shuffle your feet, DO NOT touch ungrounded objects, etc.).
4. If you touch ungrounded objects (recharge your body with static electricity), firmly touch furnace again before touching control or wires.
5. Use this procedure for installed and uninstalled (ungrounded) furnaces.
6. Before removing a new control from its container, discharge your body's electrostatic charge to ground to protect the control from damage. If the control is to be installed in a furnace, follow items 1 through 5 before bringing the control or yourself into contact with the furnace. Put all used AND new controls into containers before touching ungrounded objects.

7. An ESD service kit (available from commercial sources) may also be used to prevent ESD damage.

CARE AND MAINTENANCE

For continuing high performance and to minimize possible equipment failure, it is essential that maintenance be performed annually on this equipment. Consult your local dealer about proper maintenance and maintenance contract availability.

⚠ WARNING

ELECTRICAL SHOCK HAZARD

Failure to follow this warning could result in personal injury or death.

Turn off the gas and electrical supplies to the unit before performing any maintenance or service. Lockout and tag with appropriate label. Follow the operating instructions on the label attached to the furnace.

The minimum maintenance that should be performed on this equipment is as follows:

1. Check and clean or replace air filter each month as needed.
2. Check blower motor and wheel for cleanliness annually.
3. Check electrical connections for tightness and controls for proper operation each heating season. Service as necessary.
4. Check for proper condensate drainage. Clean as necessary.
5. Check for blockages in combustion-air and vent pipes annually.
6. Check burners for cleanliness annually.

⚠ CAUTION

CUT HAZARD

Failure to follow this caution may result in personal injury.

Be careful of sharp metal edges, etc. Use care and wear protective clothing, safety glasses, and gloves when removing parts.

Procedure 1 — Cleaning and/or Replacing Air Filter

The air filter arrangement may vary depending on the application or orientation.

⚠ WARNING

FIRE, CARBON MONOXIDE AND POISONING HAZARD

Failure to follow this warning could result in property damage, personal injury, or death.

Never operate unit without a filter or with the blower access panel removed. Operating a unit without a filter or with the blower access door removed could cause damage to the furnace blower motor. Dust and lint on internal parts of furnace can cause a loss of efficiency.

NOTE: If filter has cross-mesh binding, binding must face blower. If filter has an air direction arrow, arrow must point toward blower. To clean or replace the filters, proceed as follows:

1. Turn off electrical supply to furnace.
2. Remove blower door.
3. Slide filter out of furnace (See Fig. 2 and 3).
4. Furnaces are equipped with permanent, washable filter(s). Clean filter by spraying cold tap water through filter in opposite direction of airflow.
5. Rinse filter and let dry. Oiling or coating of filter is not recommended.
6. Slide filter into furnace.
7. Replace blower door.
8. Turn on electrical supply to furnace.

Procedure 2 — Blower Motor and Wheel Maintenance

To ensure long life, economy, and high efficiency, clean accumulated dirt and grease from blower wheel and motor annually.

The inducer and blower motors are pre-lubricated and require no additional lubrication. These motors can be identified by the absence of oil ports on each end of the motor.

The following items should be performed by a qualified service technician.

Clean blower motor and wheel as follows:

1. Turn off electrical supply to furnace.
2. Remove blower door.
3. Disconnect blower motor wires from furnace control board. Field thermostat connections may need to be disconnected depending on their length and routing.
4. Remove control box mounting screws, and position control box, transformer, and door switch assembly to right side of furnace casing.
5. If condensate trap is located in left-or right-hand side of furnace casing, proceed to item 6, otherwise remove trap and tubing as described below. (See top Fig. 6, 7, or 8.)
   a. Disconnect field drain connection from condensate trap.
   b. Disconnect drain and relief port tubes from condensate trap.
   c. Remove condensate trap from blower shelf.
6. Remove screws securing blower assembly to blower shelf and slide blower assembly out of furnace.
7. Clean blower wheel and motor by using a vacuum with soft brush attachment. Be careful not to disturb balance weights (clips) on blower wheel vanes. Do not bend wheel or blades as balance will be affected.
8. If greasy residue is present on blower wheel, remove wheel from the blower housing and wash it with an appropriate degreaser. To remove wheel:
   a. Mark blower wheel location on shaft before disassembly to ensure proper reassembly.
   b. Loosen setscrew holding blower wheel on motor shaft.

NOTE: Mark blower mounting arms and blower housing so each arm is positioned at the same hole location during reassembly.

   c. Mark blower wheel orientation and cutoff plate location to ensure proper reassembly.
   d. Remove screws securing cutoff plate and remove cutoff plate from housing.
   e. Remove bolts holding motor mounts to blower housing and slide motor and mounts out of housing. Disconnect capacitor and ground wire attached to blower housing before removing motor. Motor mounts need not be removed from motor.

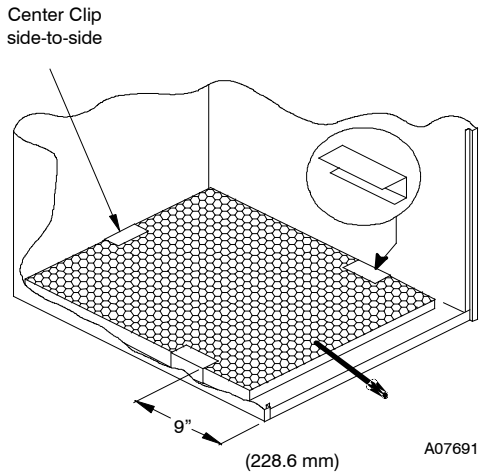

Fig. 2 - Bottom Filter Arrangement

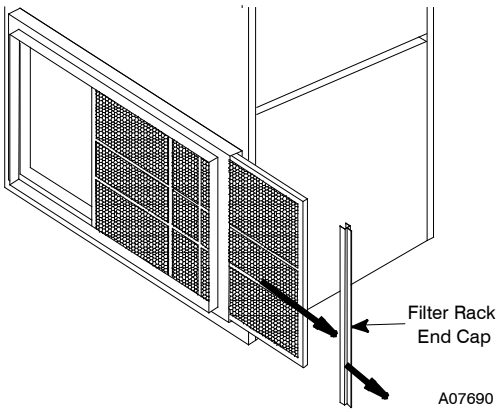

Fig. 3 - Filter Installed for Side Inlet

f. Remove blower wheel from housing.

⚠ CAUTION

UNIT DAMAGE HAZARD

Failure to follow this caution may result in furnace component failure.

The blower wheel should not be dropped or bent as balance will be affected.

g. Clean wheel per instructions on degreaser cleaner. Do not get degreaser cleaner in motor.

9. Reassemble motor and blower wheel by reversing items 8b through 8f. Ensure wheel is positioned for proper rotation. Be sure to reattach ground wire. Tighten setscrew to 140 to 160 in.-lb torque.
10. Reinstall blower assembly in furnace.
11. Reinstall control box, transformer, and door switch assembly on blower shelf.
12. Reinstall condensate trap and tubing if previously removed.
    a. Reinstall condensate trap in hole in blower shelf.
    b. Connect condensate trap drain tubes. See Fig. 6, 7, or 8.

NOTE: Ensure tubes are not kinked or pinched, as this will affect operation.

    c. Connect field drain to condensate trap.

13. Reconnect wires.

Refer to furnace wiring diagram, and connect thermostat leads if previously disconnected. (See Fig.20.)

⚠ CAUTION

UNIT DAMAGE HAZARD

Failure to follow this caution may result in unit component damage.

Heating speed selection MUST be adjusted to provide proper temperature rise as specified on the rating plate.

Table 1 – Speed Selector

COLOR	SPEED	FACTORY ATTACHED TO
Black	High	Cool
Orange	Medium High	Heat
Blue	Medium Low	M1
Red	Low	M2
White	Common	Com

14. Turn on electrical supply. Manually close blower access door switch. Use a piece of tape to hold switch closed. Check for proper rotation by jumpering R to G.

⚠ WARNING

ELECTRICAL SHOCK HAZARD

Failure to follow this warning could result in personal injury or death.

Blower access door switch opens 115-v power to furnace control. No component operation can occur. Caution must be taken when manually closing this switch for service purposes.

15. If furnace is operating properly, remove tape to release blower access door switch, remove jumper across R to G, and replace blower access door.

Procedure 3 — Cleaning Burners

The following items should be performed by a qualified service technician. If burners develop an accumulation of light dirt or dust, they may be cleaned by using the following procedure:

1. Turn off gas and electrical supplies to furnace.
2. Remove main furnace door.
3. Using backup wrench, disconnect gas supply pipe from furnace gas control valve.

⚠ CAUTION

ELECTRICAL SHOCK, UNIT DAMAGE HAZARD

Failure to follow this caution may result in personal injury or furnace component damage.

Label all wires prior to disconnection when servicing controls. Wiring errors can cause improper and dangerous operation.

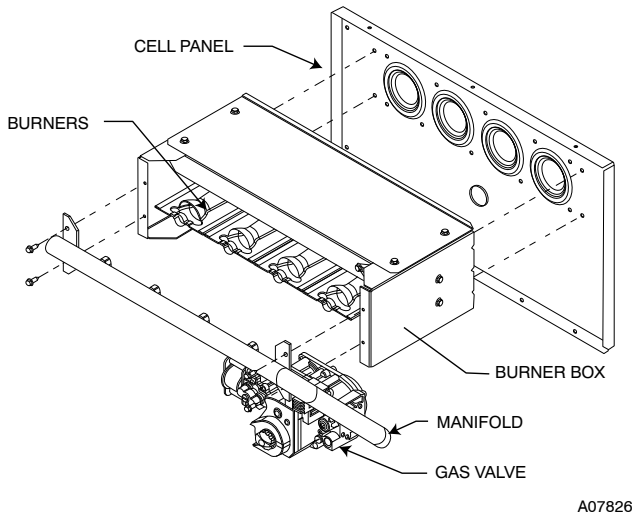

Fig. 4 - Burner Box Assembly

4. Remove wires from gas valve. Note location for reassembly.
5. Unplug igniter from harness.
6. Remove screws that secure manifold to burner box. (See Fig. 4.)

NOTE: Do not remove burner box from cell panel.

7. Remove manifold, orifices, and gas valve as 1 assembly.
8. Remove screws attaching burner assembly in burner box.

NOTE: Use care when removing and reinstalling burners not to strike the hot surface igniter.

9. Remove burner assembly from burner box.

NOTE: All burners are attached to burner bracket and can be removed as 1 assembly.

10. Clean burners with soft brush and vacuum.
11. Reinstall manifold, orifice, and gas valve assembly in burner box. Ensure burners fit over orifices.

⚠ WARNING

ELECTRICAL SHOCK HAZARD

Failure to follow this warning could result in personal injury or death.

Igniter wires must be securely placed in slot in manifold grommet or else they could become pinched or severed and electrically shorted.

12. Reconnect wires to gas valve and igniter. Refer to furnace wiring diagram for proper wire location.
13. Reinstall gas supply pipe to furnace gas control valve using backup wrench on gas valve to prevent rotation and improper orientation.

NOTE: Use propane gas resistant pipe dope to prevent gas leaks. DO NOT use Teflon tape.

⚠ WARNING

FIRE, EXPLOSION, UNIT DAMAGE HAZARD

Failure to follow this warning could result in property damage, personal injury, or death.

Gas valve switch MUST be facing forward or tilted upward.

14. Turn on gas and electrical supplies to furnace.

⚠ WARNING

FIRE OR EXPLOSION HAZARD

Failure to follow the safety warnings could result in personal injury, death, or property damage.

Never test for gas leaks with an open flame. Use a commercially available soap solution made specifically for the detection of leaks to check all connections.

15. Check for gas leaks.
16. Replace main furnace door.

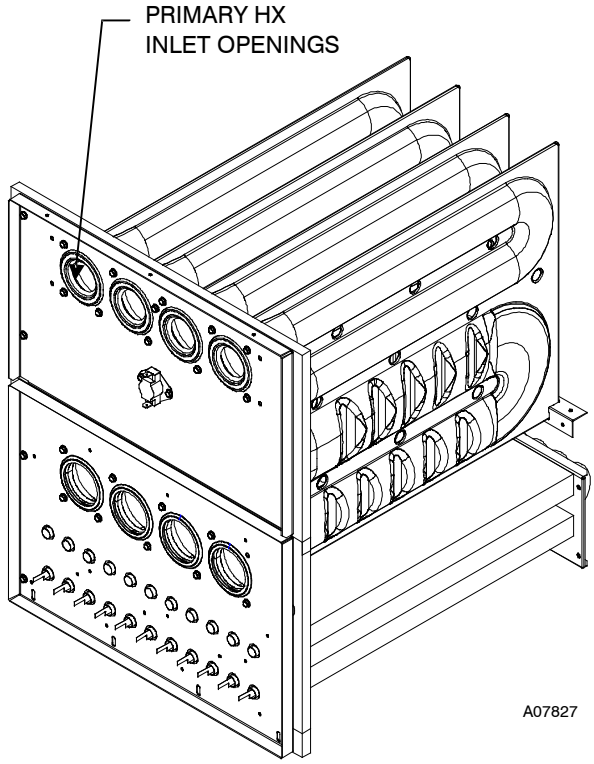

Fig. 5 - Cleaning Inlet Openings of Primary Heat Exchangers

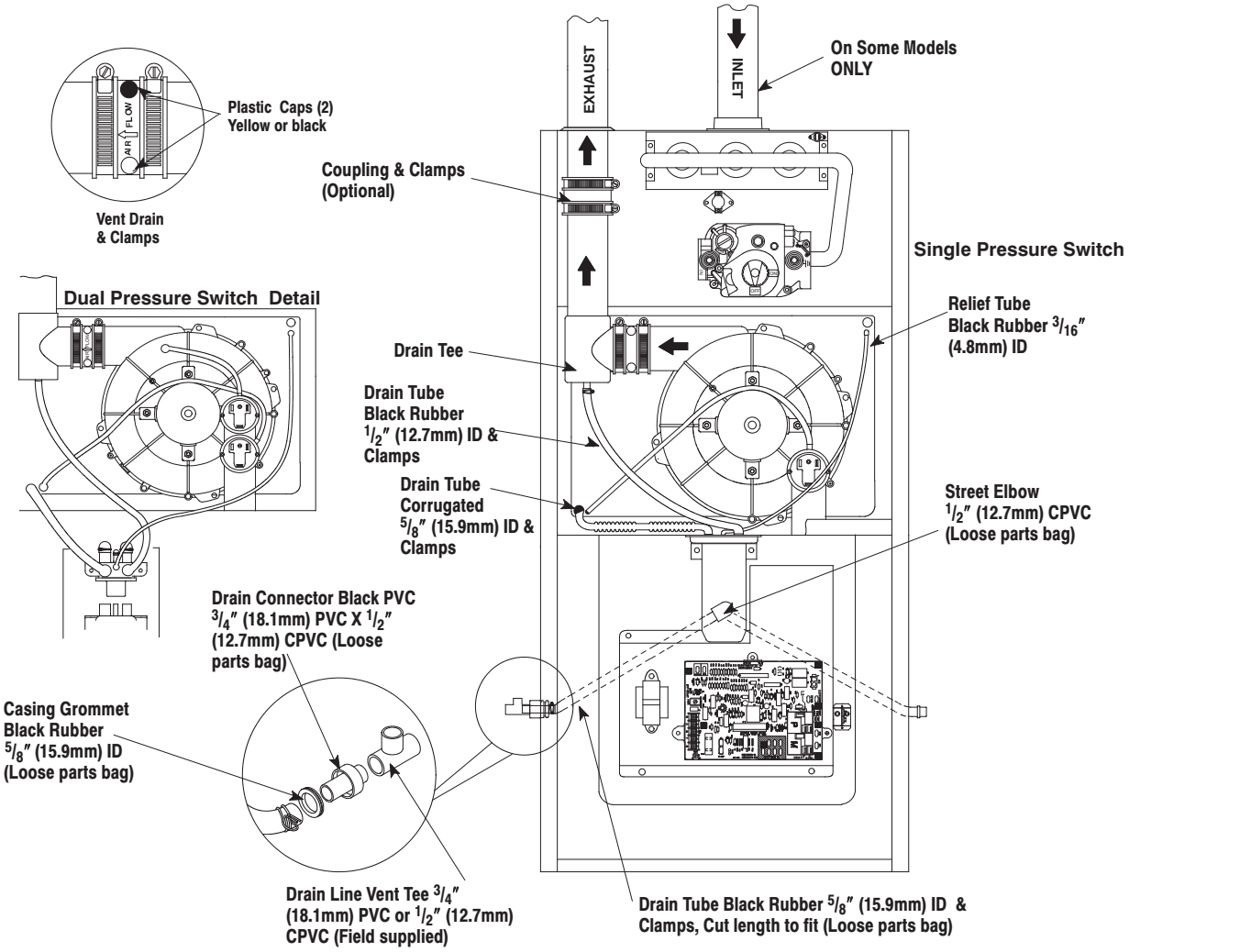

Fig. 6 - Upflow Installations Top Vent

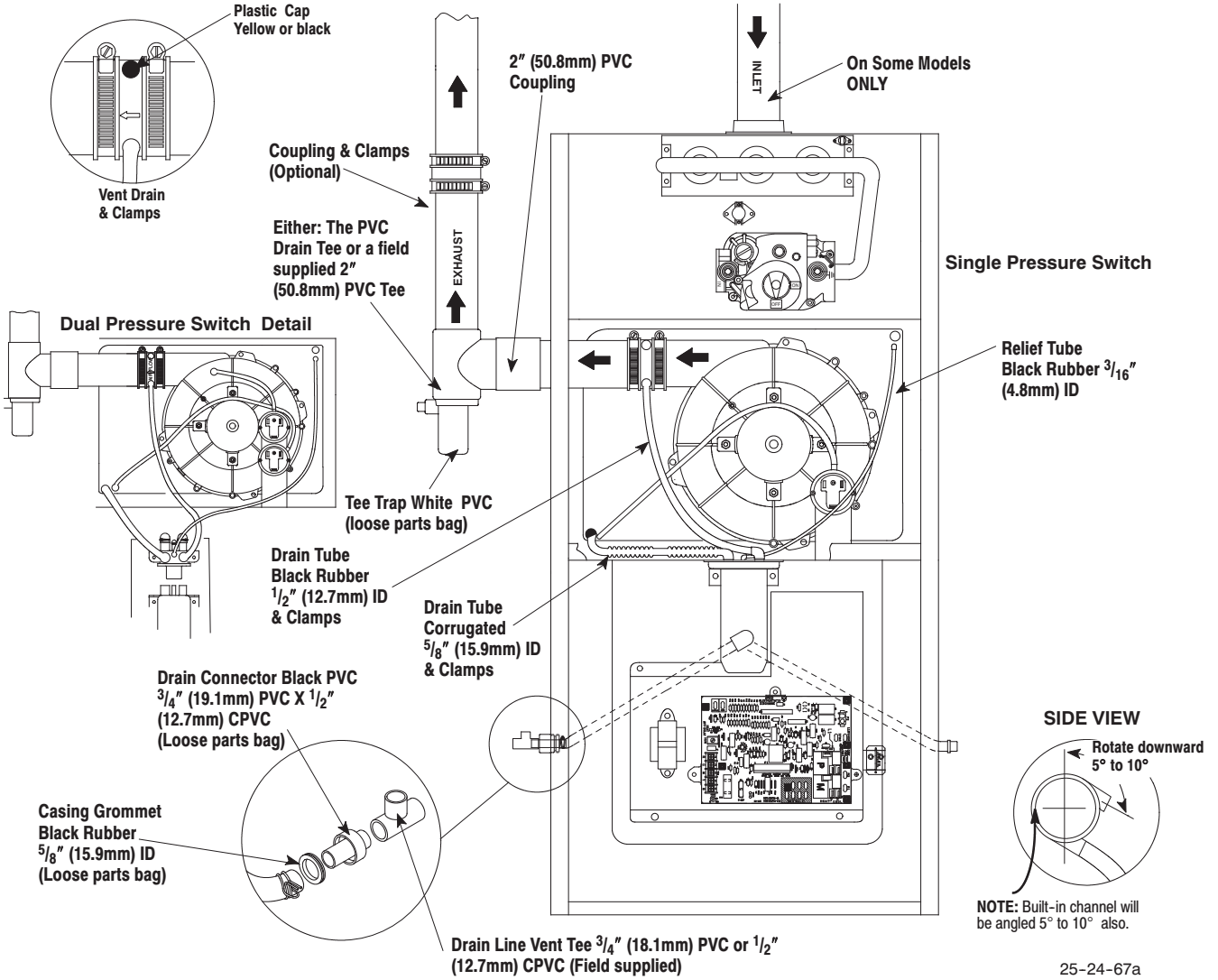

Fig. 7 - Upflow Installations Vent Through Left Side

PG9YAB

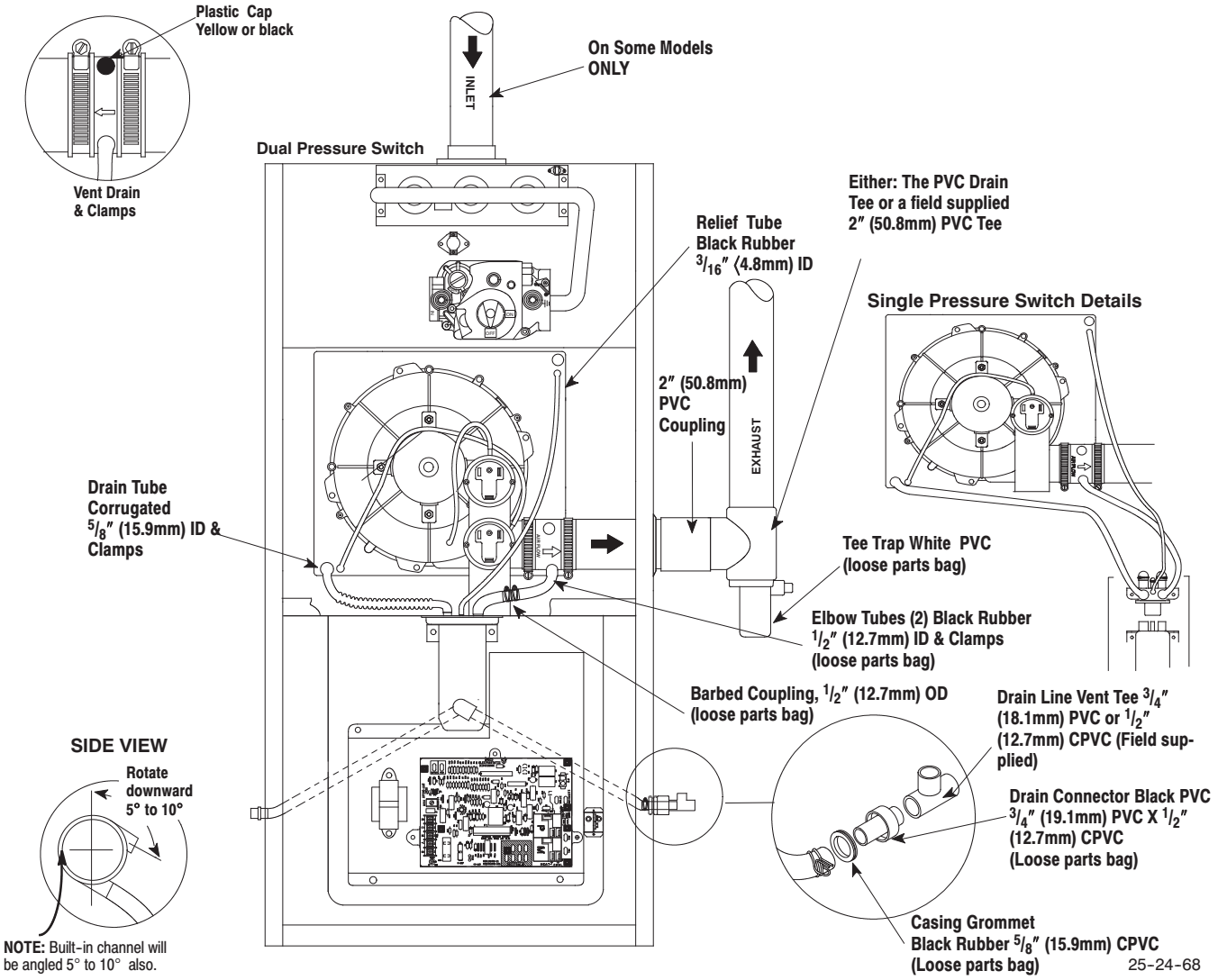

Fig. 8 - All Models Vent Through Right Side (Upflow)

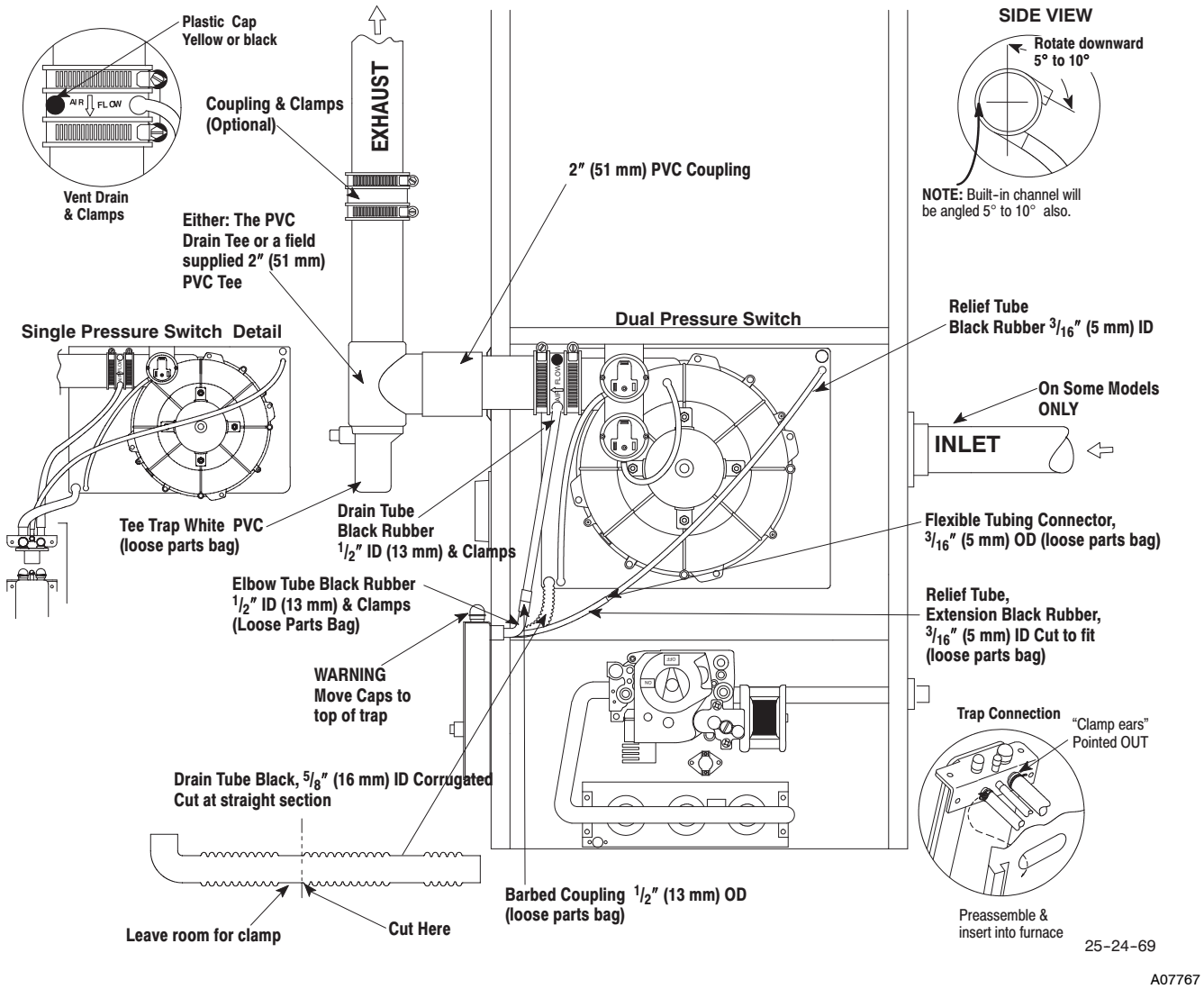

Fig. 9 - Downflow Left Side Vent and Trap

PG9YAB

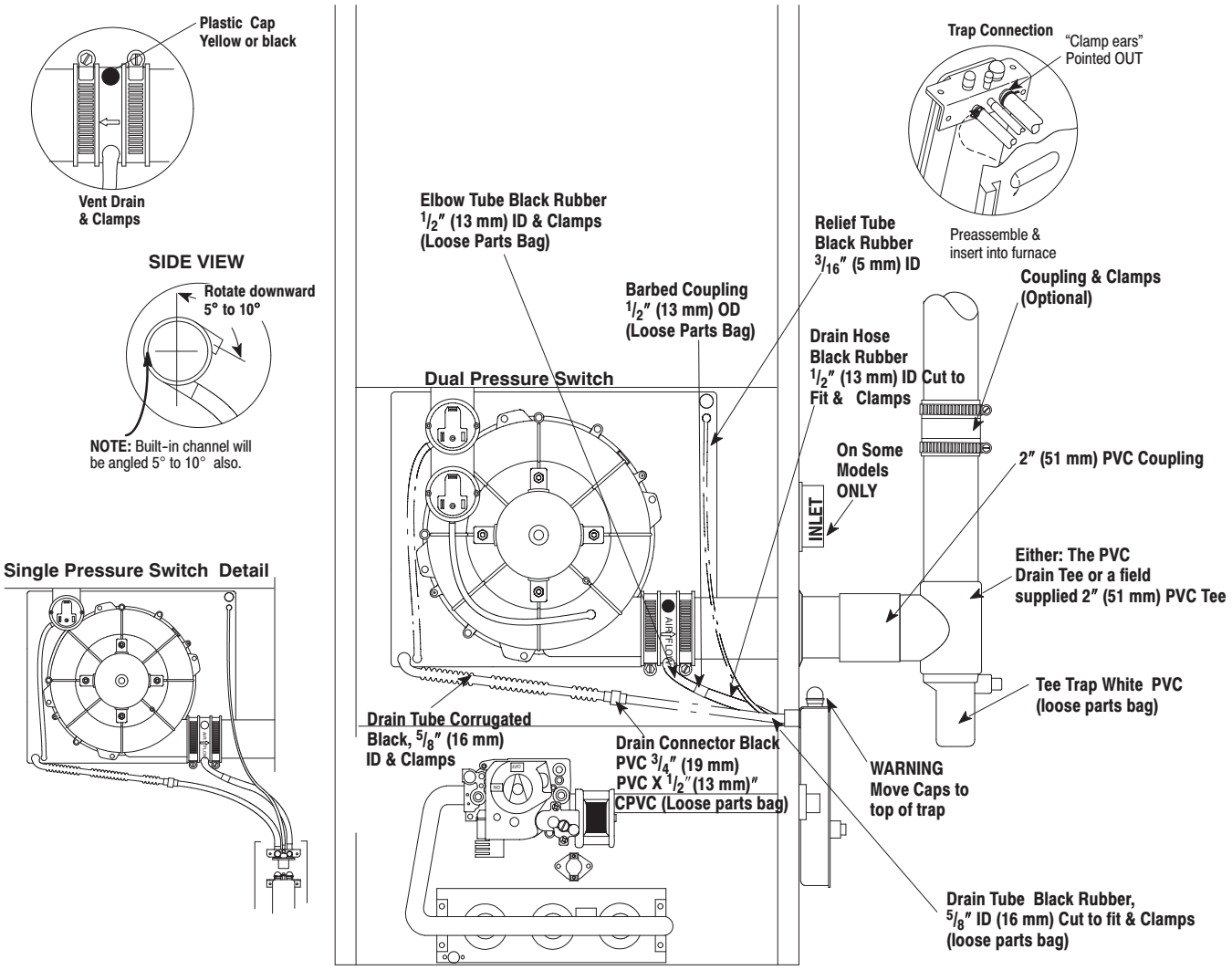

Fig. 10 – Downflow Right Side Vent and Trap

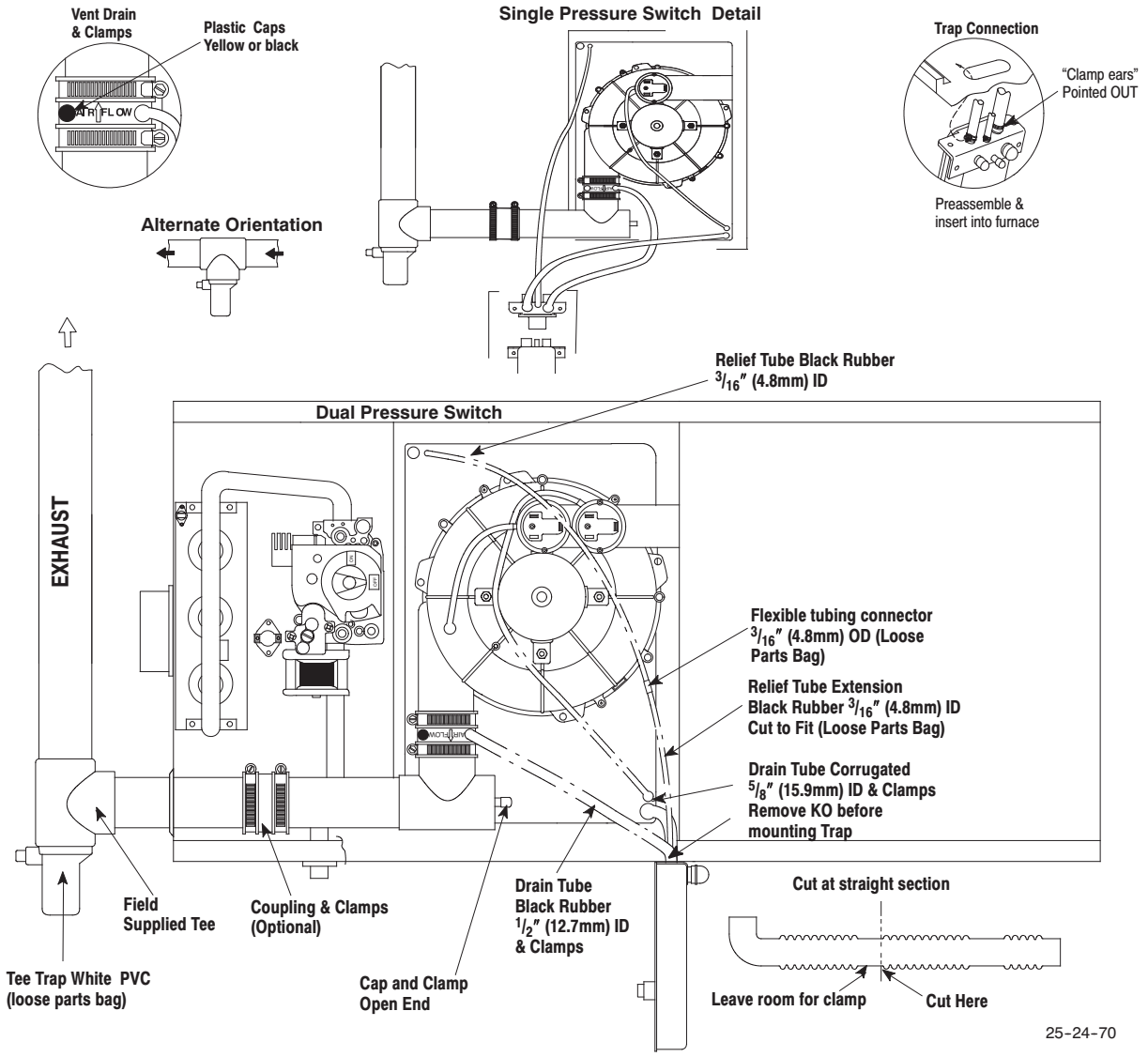

Representative drawing only, some models may vary in appearance.

A07709

Fig. 11 - Horizontal Left Through Top

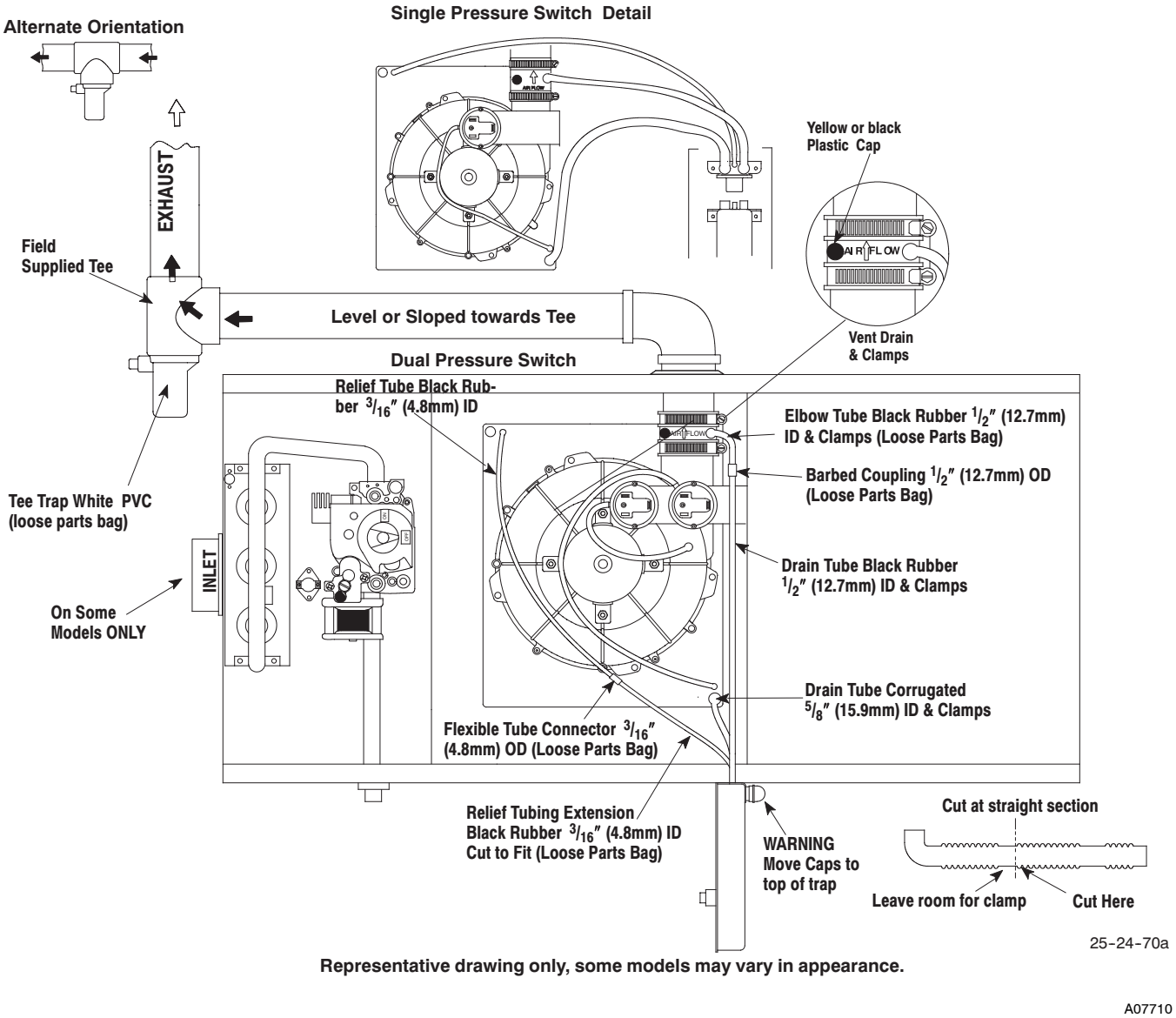

Fig. 12 - Horizontal Left Side Vent

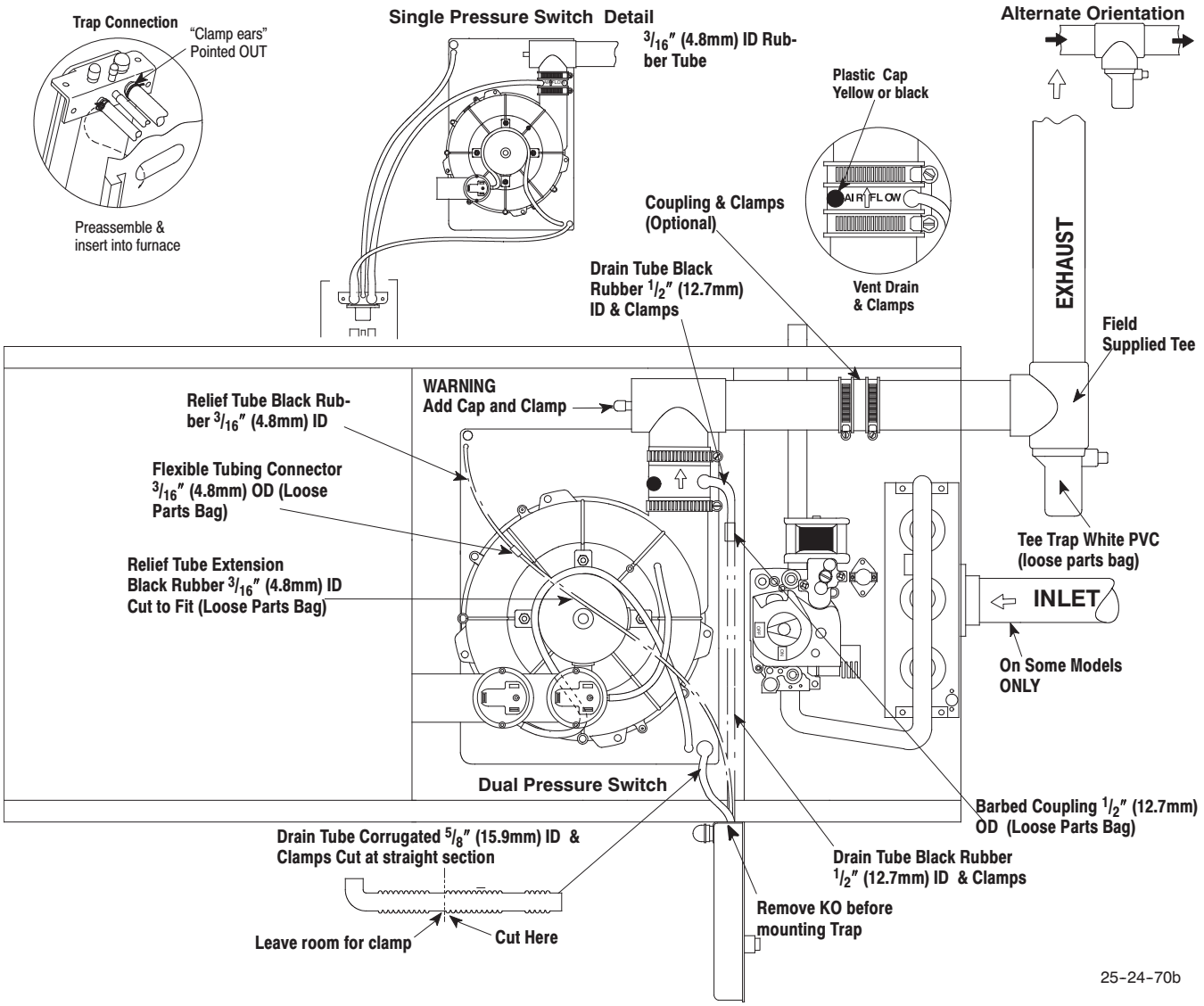

Fig. 13 - Horizontal Right Through Top

PG9YAB

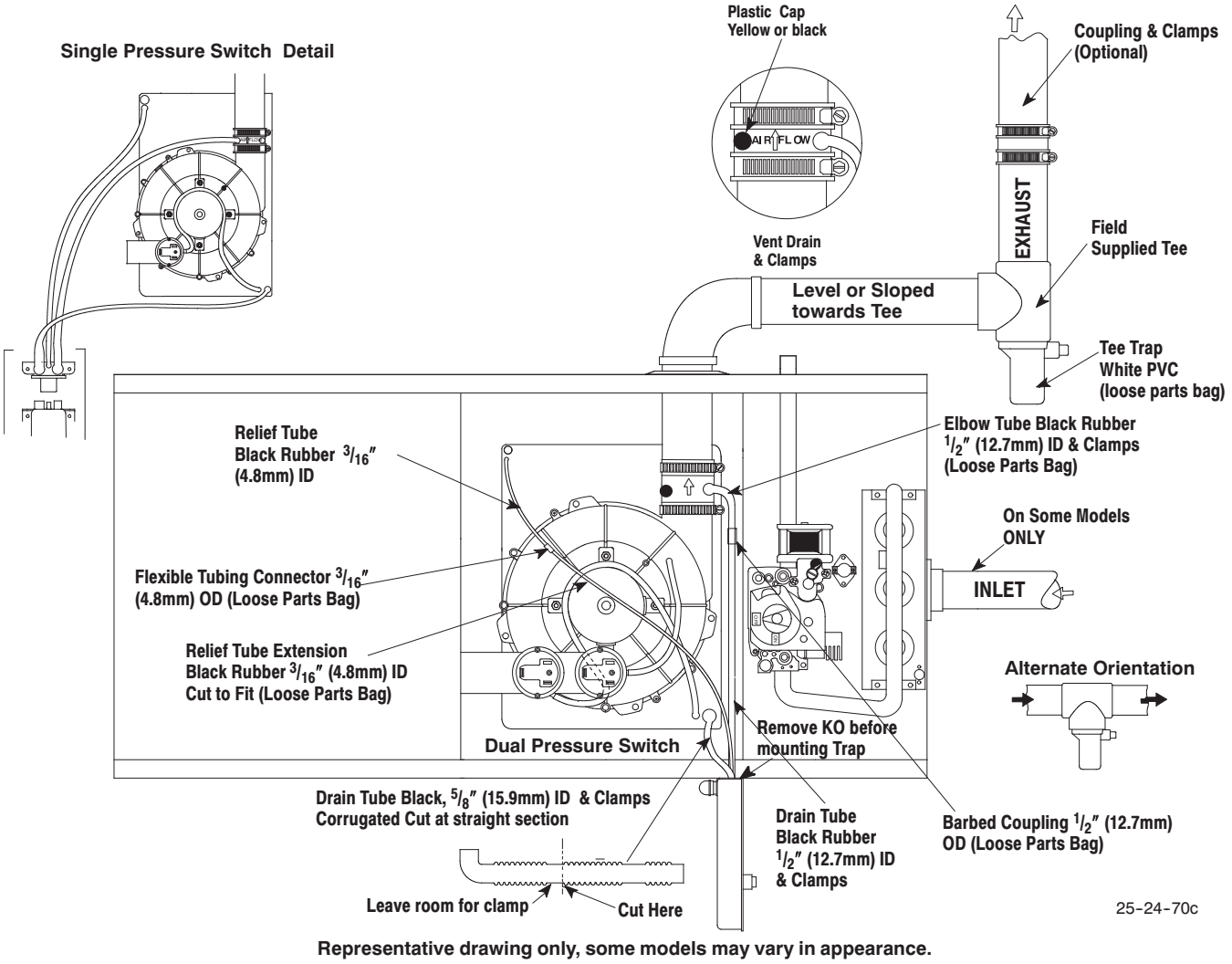

Fig. 14 - Horizontal Right Side Vent

Procedure 4 — Cleaning Heat Exchangers

The following items should be performed by a qualified service technician.

A. Primary Heat Exchangers

If heat exchangers get an accumulation of light dirt or dust on the inside, they may be cleaned by the following procedure:

NOTE: If heat exchangers get a heavy accumulation of soot and carbon, both the primary and secondary heat exchangers should be replaced rather than trying to clean them thoroughly due to their intricate design. A build-up of soot and carbon indicates that a problem exists which needs to be corrected, such as improper adjustment of manifold pressure, insufficient or poor quality combustion air, improper vent termination, incorrect size or damaged manifold orifice(s), improper gas, or a restricted heat exchanger (primary or secondary). Action must be taken to correct the problem.

1. Turn off gas and electrical supplies to furnace.
2. Remove main furnace door.

⚠ CAUTION

ELECTRICAL SHOCK, UNIT DAMAGE HAZARD

Failure to follow this caution may result in personal injury or furnace component damage.

Label all wires prior to disconnection when servicing controls. Wiring errors can cause improper and dangerous operation.

3. Disconnect wires or connectors to flame rollout switch, gas valve, igniter, and flame sensor.
4. Using backup wrench, disconnect gas supply pipe from gas valve.
5. Remove screws attaching burner box to cell panel. (See Fig. 4.)

NOTE: Burner box, manifold, gas valve, and burner assembly should be removed as 1 assembly.

6. Clean heat exchanger openings with a vacuum and a soft brush. (See Fig. 5.)

NOTE: After cleaning, inspect heat exchangers to ensure they are free of all foreign objects that may restrict flow of combustion products.

7. Reverse items 4 and 5 for reassembly.

⚠ CAUTION

UNIT MAY NOT OPERATE

Failure to follow this caution may result in improper unit operation.

The ground wire from the gas valve MUST be attached to the burner box attachment screw or furnace lockout may occur.

8. Refer to furnace wiring diagram and connect wires to flame rollout switch, gas valve, igniter, and flame sensor.
9. Reconnect pressure switch tubes to gas valve and intake housing. Refer to tube routing label on main furnace door for proper tube location. Be sure tubes are not kinked. (See Fig. 6 - 14.)
10. Turn on gas and electrical supplies to furnace.
11. Check furnace operation through 2 complete heat operating cycles. Burner flames should be clear blue, almost transparent. (See Fig. 15.)

⚠ WARNING

FIRE OR EXPLOSION HAZARD

Failure to follow the safety warnings could result in personal injury, death, or property damage.

Never test for gas leaks with an open flame. Use a commercially available soap solution made specifically for the detection of leaks to check all connections.

12. Check for gas leaks.
13. Replace main furnace door.

B. Secondary Heat Exchangers

NOTE: The condensing side (inside) of secondary heat exchangers CANNOT be serviced or inspected. A small number of bottom outlet openings can be inspected by removing inducer assembly. See Flushing Collector Box and Drainage System section for details on removing inducer assembly.

Procedure 5 — Flushing Collector Box and Drainage System

1. Turn off gas and electrical supplies to furnace.
2. Remove main furnace door.
3. Disconnect inducer motor and pressure switch wires or connectors.

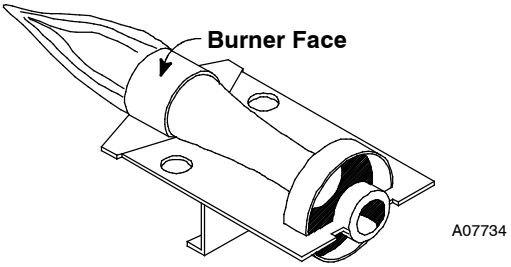

Fig. 15 - Burner Flame

PG9YAB

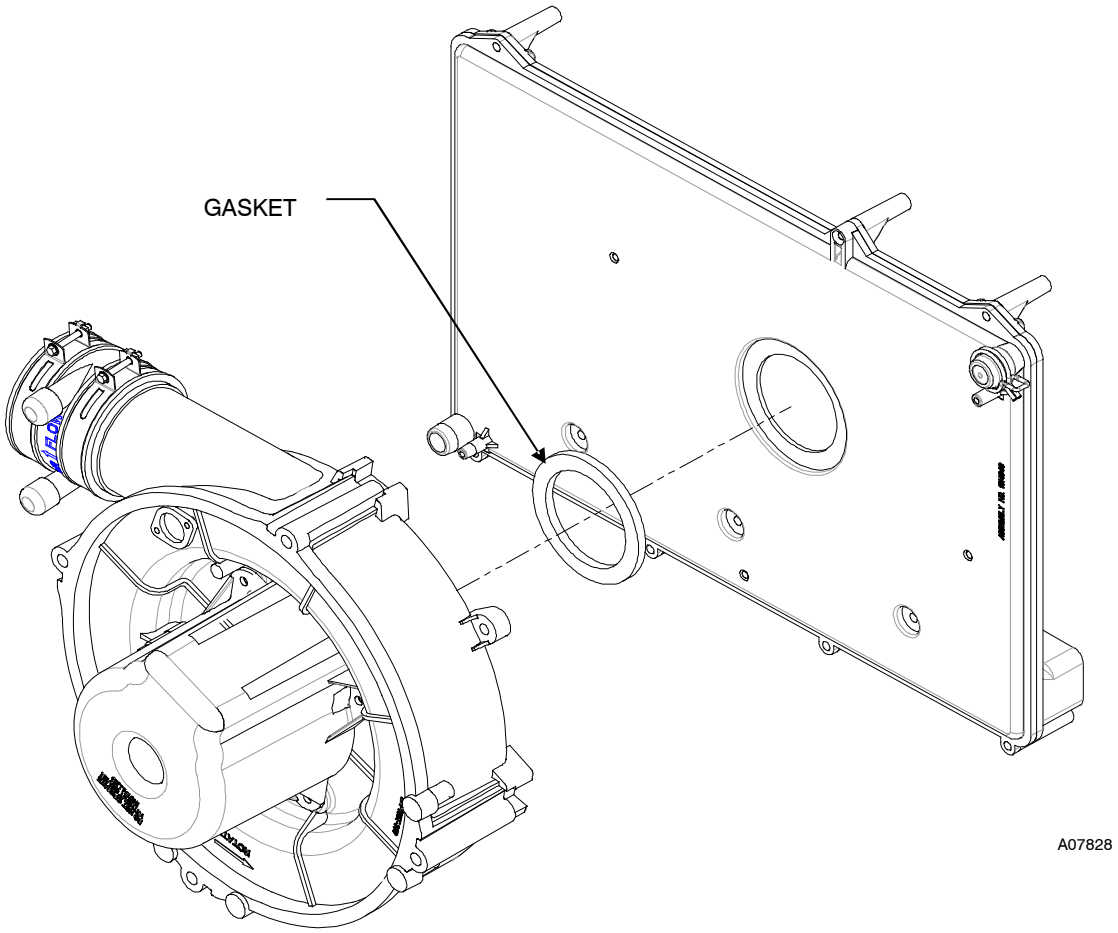

Fig. 16 – Gasket on Collector Box

4. Disconnect pressure switch tubes.
5. Disconnect vent pipe from inducer housing outlet by loosening clamp.
6. Disconnect drain tube from inducer housing. (See Fig. 6 – 14.)
7. Remove inducer housing assembly by removing 4 bolts attaching assembly to cell panel.
8. Flush inside of collector box with water until discharge from condensate trap is clean and runs freely.

NOTE: Ensure that drain tube disconnected from inducer housing is higher than collector box opening or water will flow out tube.

9. Inspect inside area of collector box for any pieces of foreign materials and remove if present.

⚠ CAUTION

UNIT DAMAGE HAZARD

Failure to follow this caution may result in furnace component damage.

DO NOT use wire brush or other sharp object to inspect or dislodge materials in secondary heat exchangers as failure of the secondary heat exchanger may occur. Flush with water only.

10. Reassemble inducer assembly by reversing items 5 through 7. Tighten the vent coupling screw(s) to 15 in.-lb. of torque.

NOTE: If gasket between inducer housing and collector box is damaged in any way, it must be replaced. (See Fig. 16.)

11. Refer to furnace wiring diagram and connect wires to inducer motor and pressure switch or connectors.
12. Reconnect pressure tubes to pressure switch. See diagram on main furnace door for proper location of tubes. Be sure tubes are not kinked. (See Fig. 6 – 14.)
13. Turn on gas and electrical supplies to furnace.
14. Check furnace operation through 2 complete heat operating cycles. Check area below inducer housing, vent pipe, and condensate trap to ensure no condensate leaks occur. If leaks are found, correct problem.

⚠ WARNING

FIRE OR EXPLOSION HAZARD

Failure to follow the warnings could result in personal injury, death, or property damage.

Never test for gas leaks with an open flame. Use a commercially available soap solution made specifically for the detection of leaks to check all connections.

15. Check for gas leaks.
16. Replace main furnace door.

Procedure 6 — Servicing Hot Surface Igniter

The igniter does NOT require annual inspection. Check igniter resistance before removal.

1. Turn off gas and electrical supplies to furnace.
2. Remove main furnace door.
3. Disconnect igniter wire connection.

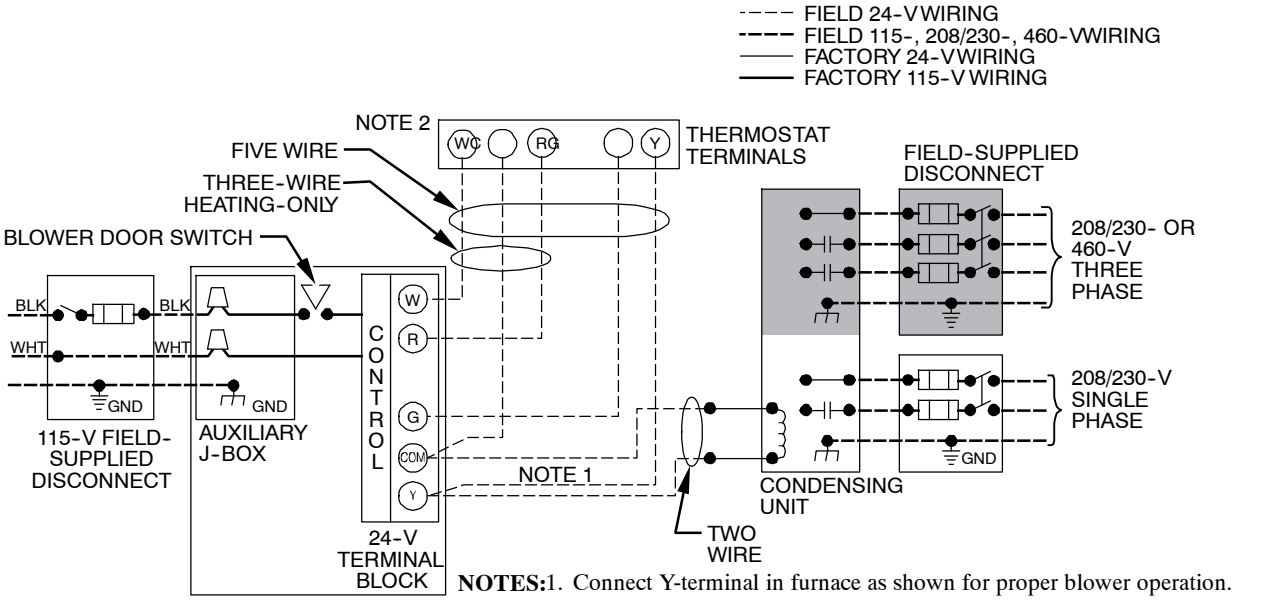

NOTES: 1. Connect Y-terminal in furnace as shown for proper blower operation.
2. Some thermostats require a "C" terminal connection as shown.
3. If any of the original wire, as supplied, must be replaced, use same type or equivalent wire.

Fig. 17 - Field Wiring

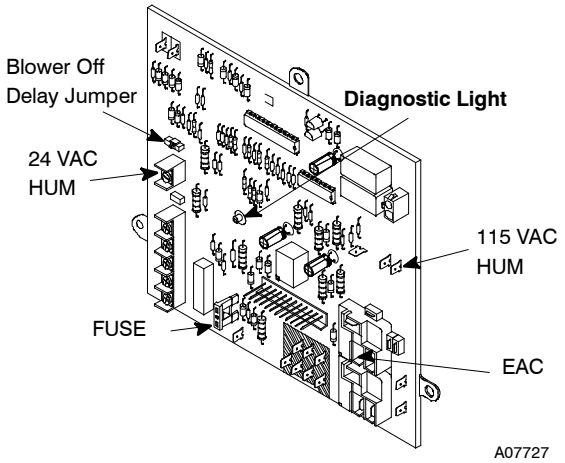

Fig. 18 - Control Center

4. Check igniter resistance. Igniter resistance is affected by temperature. Only check resistance when the igniter is at room temperature.
   a. Using an ohm meter, check resistance across both igniter leads in connector.
   b. Cold reading should be between 40 ohms and 70 ohms.
5. Remove igniter.

⚠ CAUTION

BURN HAZARD

Failure to follow this caution may result in personal injury.

Allow igniter to cool before removal. Normal operating temperatures exceed 2000°F (1093°C).

   a. Using a 1/4 in. nut driver, remove the single screw securing the igniter bracket to the burner box and carefully withdraw the igniter through the bottom of the burner box without striking the igniter on surrounding parts.
   b. Inspect igniter for signs of damage or failure.

⚠ CAUTION

UNIT DAMAGE HAZARD

Failure to follow this caution may result in premature failure of the igniter.
The igniter is fragile. DO NOT allow it to hit the side of the burner box opening while removing or replacing it.

   c. If replacement is required, replace igniter on igniter bracket and then install assembly into burner box to avoid damage to the igniter.
6. To replace igniter and bracket assembly, reverse items 5a and 5b.
7. Reconnect igniter wire connection.

⚠ WARNING

ELECTRICAL SHOCK HAZARD

Failure to follow this warning could result in personal injury or death.

Igniter wires must be securely placed in slot in manifold grommet or else they could become pinched or severed and electrically shorted.

8. Turn on gas and electrical supplies to furnace.
9. Verify igniter operation by initiating furnace control self-test feature or by cycling thermostat.
10. Replace main furnace door.

Procedure 7 — Electrical Controls and Wiring

⚠ WARNING

ELECTRICAL SHOCK HAZARD

Failure to follow this warning could result in personal injury or death.

There may be more than 1 electrical supply to the furnace. Check accessories and cooling unit for additional electrical supplies.

PG9YAB

The electrical ground and polarity for 115-v wiring must be maintained properly. Refer to Fig. 17 for field wiring information and to Fig. 20 for furnace wiring information.

NOTE: If polarity is not correct, STATUS LED on furnace control board will flash rapidly and prevent furnace from operating. The control system also requires an earth ground for proper operation of furnace control and flame sensor.

The 24-v circuit contains an automotive-type, 5-amp fuse located on the control. (See Fig. 18.) Any direct shorts of the 24-v wiring during installation, service, or maintenance will cause this fuse to blow. If fuse replacement is required, use ONLY a 5-amp fuse of identical size. The control LED will flash status code 24 when fuse needs to be replaced.

With power to unit disconnected, check all electrical connections for tightness. Tighten all screws on electrical connections. If any smoky or burned connections are found, disassemble connection, clean all parts, strip wire, and reassemble properly and securely.

Reconnect electrical supply to unit and observe unit through 1 complete operating cycle for proper operation.

Procedure 8 — Checking Heat Tape Operation (If Applicable)

In applications where the ambient temperature around the furnace is 32°F (0°C) or lower, freeze protection measures are required. If heat tape has been applied, check to ensure it will operate when low temperatures are present.

⚠ CAUTION

UNIT AND PROPERTY DAMAGE HAZARD

Failure to follow this caution may result in furnace component damage or property damage.

If this furnace is to be operated in an unconditioned space where the ambient temperatures may be 32°F (0°C) or lower, freeze protection measures must be taken. (See Fig. 19.) See CONDENSATE DRAIN PROTECTION section of Installation, Start-Up and Operating Instructions.

NOTE: Heat tape, when used, should be wrapped around the condensate drain trap and drain line. There is no need to use heat tape within the furnace casing. Most heat tapes are temperature activated, and it is not practical to verify the actual heating of the tape. Check the following:

1. Check for signs of physical damage to heat tape such as nicks, cuts, abrasions, gnawing by animals, etc.
2. Check for discolored heat tape insulation. If any damage or discolored insulation is evident, replace heat tape.
3. Check that heat tape power supply circuit is on.

Procedure 9 — Winterizing

⚠ CAUTION

UNIT DAMAGE HAZARD

Failure to follow this caution may result in furnace component damage.

Freezing condensate left in the furnace will damage the furnace.

If the furnace will be off for an extended period of time in a structure where the temperature will drop to 32°F (0°C) or below, winterize as follows:

1. Turn off electrical supply to furnace.
2. Remove main furnace door.
3. Disconnect the 1/2” I.D. rubber hose from the vent drain fitting (or tee) that is located downstream of the combustion blower. Insert a funnel into the hose and pour four (4) ounces of sanitary type (RV) antifreeze into the condensate trap. Reconnect the 1/2” I.D. rubber hose to the stub the vent drain fitting. Secure with the hose clamp.

⚠ CAUTION

UNIT DAMAGE HAZARD

Failure to follow this caution may result in unit component damage.

Do not use ethylene glycol (Prestone II antifreeze/coolant or equivalent automotive type). Failure of plastic components may occur.

4. Disconnect the 5/8” I.D. rubber hose from the condensate trap. Insert a funnel into the hose and pour four (4) ounces of sanitary type (RV) antifreeze into the plastic transition box. Squeeze the hose together near the and quickly reconnect the 5/8” I.D. rubber hose to the stub on the condensate trap. Secure with the hose clamp.
5. When you return home, your furnace will be ready to start, as it is not necessary to drain the antifreeze from the furnace.

WIRING DIAGRAM

See Fig. 20 for Wiring Diagram.

TROUBLESHOOTING

Use the Troubleshooting Guide, the status code LED on the control and the Component Test to isolate furnace operation problems.

A. Status Codes

For an explanation of status codes, refer to service label located on front of blower door or Fig. 21.

NOTE: Removing the blower access door will open the blower access door switch and terminate 115-v power to the control. This will erase the stored status code.

NOTE: NO thermostat signals should be present at control and all blower off delays must be completed to view previous codes.

⚠ CAUTION

UNIT DAMAGE HAZARD

Failure to follow this caution may result in damage to unit components.

Make sure limit switch wire does not contact any metallic component such as the gas valve. If wire is shorted, the 5-amp fuse on furnace control board will open and the unit will not operate.

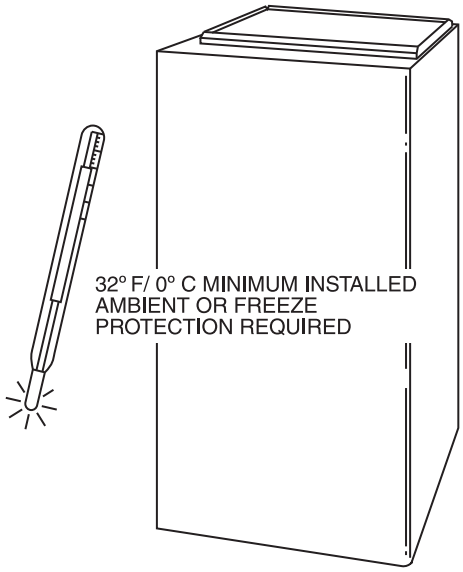

A07911

Fig. 19 - Winterizing the Furnace

To retrieve last code, remove 1 of the red main limit wires for 1 to 4 sec until the LED light goes out, then reconnect it. (Do not leave red wire disconnected for longer periods of time as the control will assume an overtemperature condition exists and will respond with blower operation.) This places the control in the status recall mode and displays the first code stored in memory.

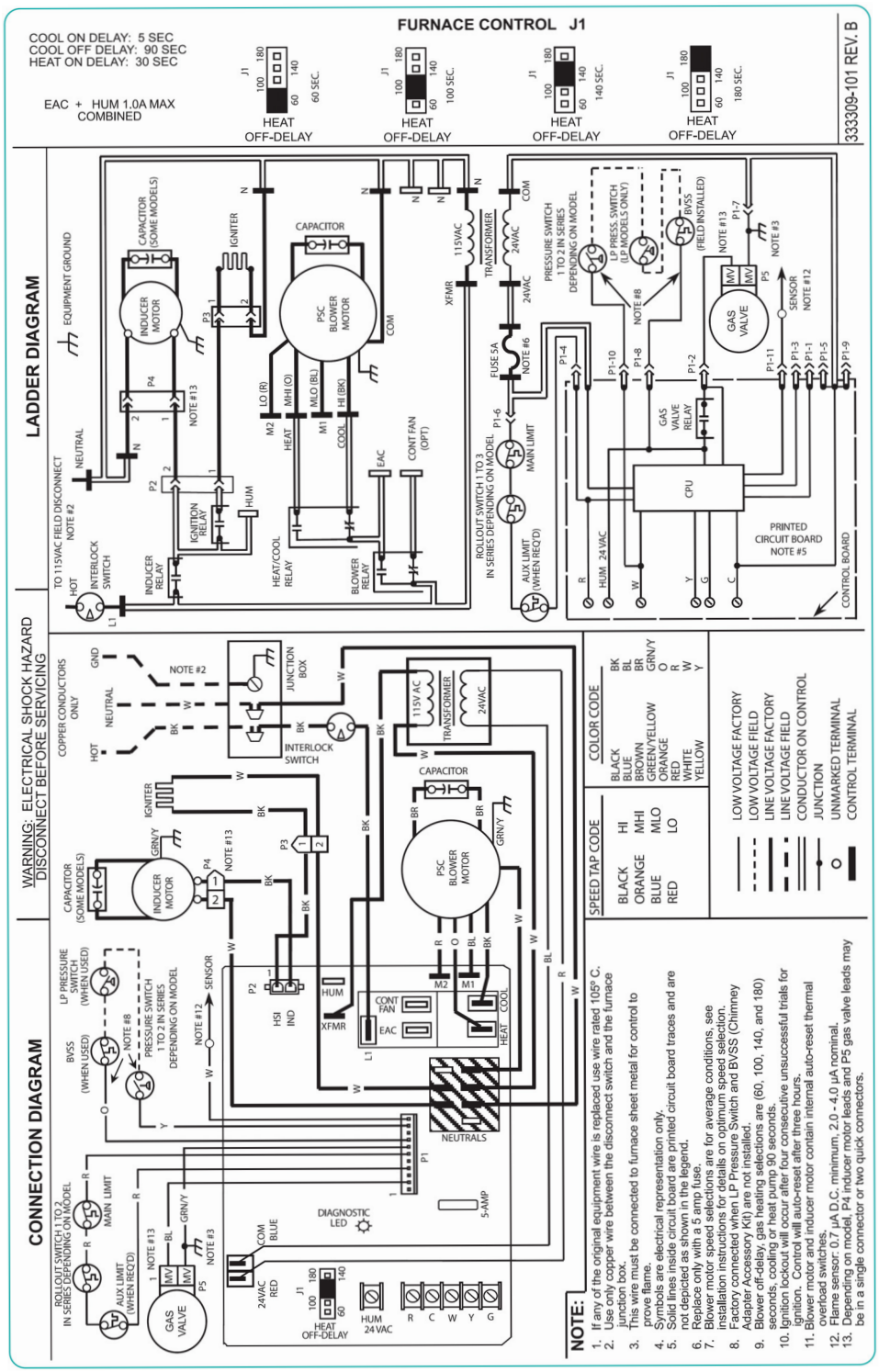

Fig. 20 – Wiring Diagram

A07824

SERVICE

If status code recall is needed, briefly (2-3 seconds) remove then reconnect one limit switch wire (main or rollout) to display last stored status code. Do not remove power or blower door before initiating status code recall or code will be lost. Code is automatically cleared after 72 hours or upon power reset. Proper flame sense microamps: 0.7 microamps D.C. minimum, 2.0 - 4.0 microamps nominal

LED CODE	DIAGNOSTIC FLASH CODES
OFF	24 VAC or 115VAC is off, fuse is open.
ON SOLID	Soft lockout - Furnace Control error (1 hr delay) If code repeats immediately following power reset then replace control.
HEARTBEAT (bright-dim)	Normal operation or no previous Diagnostic Code
2 FLASHES	Pressure switch(es) closed when should be open
3 FLASHES	Pressure switch open when should be closed on single stage models. Low pressure switch open when should be closed on 2 stage / VS models
4 FLASHES	Limit or roll-out switch open
5 FLASHES	Flame sensed out of sequence
6 FLASHES	Failure to ignite or flame sense lost while running
6 + 1 FLASHES	Soft lockout - Max of four trials for ignition reached (3 hr delay)
7 FLASHES	Soft lockout - Limit or roll-out switch open longer than 2 minutes (1 hr delay) (roll-out switch requires manual reset)
8 FLASHES	Permanent lockout - Gas valve relay contact stuck closed or mis-wired gas valve (power reset only)
9 FLASHES	High pressure switch open when should be closed on 2 - stage / VS models only
10 FLASHES	Line voltage polarity reversed. If twinned, refer to kit instructions.

330713-101 REV. D

A07825

Fig. 21 - Service Label

PG9YAB

©2009 Payne Heating & Cooling Systems • 7310 W. Morris St. • Indianapolis, IN 46231 Printed in U.S.A. Edition Date: 05/09

Catalog No: SG–PG9YAB–01

Manufacturer reserves the right to change, at any time, specifications and designs without notice and without obligations.

Replaces: New