PG92SCS ALL
PG92SBS 048080 ONLY
CONDENSING GAS FURNACE

Product Data

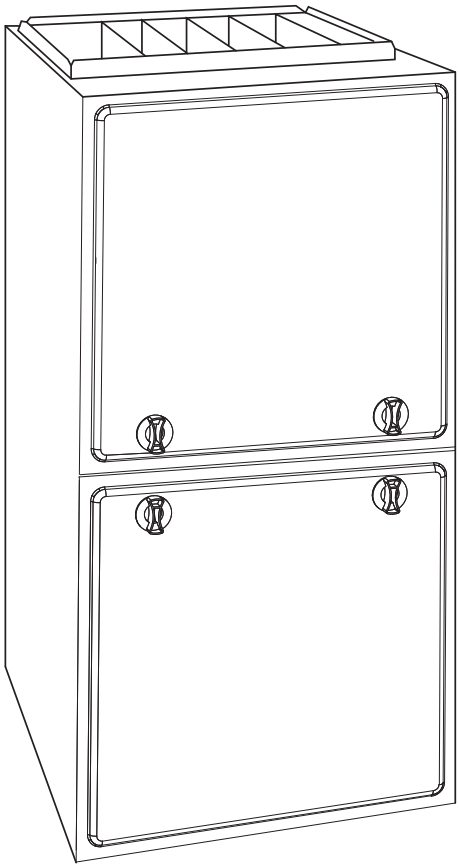

A11300

The model PG92SCS is an efficient and robust 4−way multipoise condensing furnace with features including single−stage heating and a rugged PSC Blower Motor. The PG92SCS builds on the many Payne successes in the furnace industry and establishes a new standard for all high−efficiency gas furnaces.

STANDARD FEATURES

- Heating efficiency of 92.1% AFUE.
- Direct−vent/sealed combustion, single−pipe venting or ventilated combustion air.
- PSC blower motor.
- 4−way multipoise furnace.
- Hot surface ignition.
- LED diagnostics and self test feature.
- Stores fault codes during power outages.
- Adjustable heating air temperature rise.
- Adjustable cooling airflow.
- Approved for Manufactured Housing/Mobile Home applications with MH accessory kit.
- Approved for Twinning applications (48060 through 60120 sizes, only).
- Cabinet air leakage less than 2.0% at 1.0 in. W.C. and cabinet air leakage less than 1.4% at 0.5 in. W.C. when tested in accordance with ASHRAE standard 193.

Use of the AHRI Certified ™ Mark indicates a manufacturer's participation in the program. For verification of certification for individual products, go to www.ahridirectory.org.

SAP ORDERING NO.	CASING DIMENSIONS (IN.)			RATED HEATING OUTPUT†	AFUE		ENERGY STAR®	HEATING AIRFLOW		COOLING CFM @ 0.5 ESP (in. W.C.)	MOTOR HP - SPEED TAPS
	H	D	W	(BTUH)	UPFLOW/ HORIZON-TAL	DOWN-FLOW		CFM‡	HEATING ESP (in. W.C.)		
PG92SCS30040A	35	29.5	14.2	37,000	92.1%	92.1%	None	910	0.10	595-970	1/3 - 4
PG92SCS48060B	35	29.5	17.5	56,000	92.1%	92.1%	None	980	0.12	985-1505	1/2 - 4
PG92SBS48080B	35	29.5	17.5	75,000	92.1%	92.1%	None	1030	0.15	760-1555	1/2 - 5
PG92SCS60080C	35	29.5	21.0	75,000	92.1%	92.1%	None	1115	0.15	865-1885	3/4 - 5
PG92SCS48100C	35	29.5	21.0	93,000	92.1%	92.1%	None	1490	0.20	890-1490	1/2 - 4
PG92SCS60100C	35	29.5	21.0	93,000	92.1%	92.1%	None	1550	0.20	1475-1970	3/4 - 4
PG92SCS60120D	35	29.5	24.5	112,000	92.1%	92.1%	None	2070	0.20	1450-2050	3/4 - 4

† Capacity in accordance with DOE test procedures. Ratings are position dependent. See rating plate.
‡ Heating CFM at factory default blower motor heating tap settings.
ESP — External Static Pressure

FEATURES AND BENEFITS

HYBRID HEAT® Dual Fuel system compatible — This system can provide more control over your monthly energy bills by automatically selecting the most economical method of heating. With HYBRID HEAT components, our system automatically switches between the gas furnace and the electric heat pump as outside temperatures change to maintain greater efficiency and comfort than with any traditional single-source heating system. The heat pump also delivers high-efficiency cooling in the summer.

Robust Igniter — Payne's unique SiN igniter is not only physically robust but it is also electrically robust. It is capable of running at line voltage and does not require complex voltage regulators as do other brands. This unique feature further enhances the gas furnace reliability and continues Payne's tradition of technology leadership and innovation in providing a reliable and durable product.

Reliable Heat Exchanger Design — The aluminized steel, clam shell primary heat exchanger was re–engineered to achieve greater efficiency out of a smaller size. The first two passes of the heat exchanger are based on the current 80% product, a design with more than ten years of field-proven performance and success. These innovations, paired with the continuation of a crimped, no-weld seam create an efficient, robust design for this essential component.

The condensing heat exchanger, a stainless steel fin and tube design, is positioned in the furnace to extract additional heat. Stainless steel coupling box componentry between heat exchangers has exceptional corrosion resistance in both natural gas and propane applications.

4-Way Multipoise Design — One model for all applications – there is no need to stock special downflow or horizontal models when one unit will do it all. The new heat exchanger design allows these units to achieve the certified AFUE in all positions.

Direct or Single-pipe Venting, or Optional Ventilated Combustion Air — This furnace can be installed as a 2-pipe (Direct Vent) furnace, in an optional ventilated combustion air application, or in single-pipe, non-direct vent applications. This provides added flexibility to meet diverse installation needs.

Sealed Combustion System — This furnace brings in combustion air from outside the furnace, which results in especially quiet operation. By sealing the entire combustion vestibule, the entire furnace can be made quieter, not just the burners.

Monoport Burners — The burners are specially designed and finely tuned for smooth, quiet combustion and economical operation.

Bottom Closure — Factory–installed for side return; easily removable for bottom return. The multi-use bottom closure can also serve for roll-out protection in horizontal applications, and act as the bottom closure for the optional return air base accessory.

Blower Access Panel Switch — Automatically shuts off 115-v power to furnace whenever blower access panel is opened.

Quality Registration — Our furnaces are engineered and manufactured under an ISO 9001 registered quality system.

Certifications — This furnace is CSA (AGA and CGA) design certified for use with natural and propane gases. The furnace is factory–shipped for use with natural gas. A CSA listed gas conversion kit is required to convert furnace for use with propane gas. The efficiency is AHRI efficiency rating certified. This furnace meets California Air Quality Management District emission requirements.

SPECIFICATIONS

The furnace should be sized to provide 100 percent of the design heating load requirement plus any margin that occurs because of furnace model size capacity increments. None of the furnace model sizes can be used if the heating load is 20,000 BTU or lower. Use Air Conditioning Contractors of America (Manual J and S); American Society of Heating, Refrigerating, and Air-Conditioning Engineers; or other approved engineering method to calculate heating load estimates and select the furnace. Excessive oversizing of the furnace may cause the furnace and/or vent to fail prematurely, customer discomfort and/or vent freezing.

Failure to follow these guidelines is considered faulty installation and/or misapplication of the furnace; and resulting failure, damage, or repairs may impact warranty coverage.

Heating Capacity and Efficiency			**30040**	**48060**	**48080**	**60080**	**48100**	**60100**	**60120**
Input	High Heat	(BTUH)	40,000	60,000	80,000	80,000	100,000	100,000	120,000
Output	High Heat	(BTUH)	37,000	56,000	75,000	75,000	93,000	93,000	112,000
Certified Temperature Rise Range ºF (ºC)		High Heat	40 - 70 (22 - 39)	35 - 65 (19 - 36)	35 - 65 (19 - 36)	35 - 65 (19 - 36)	40 - 70 (22 - 39)	40 - 70 (22 - 39)	45 - 75 (25 - 42)
Airflow Capacity and Blower Data			**30040**	**48060**	**48080**	**60080**	**48100**	**60100**	**60120**
Rated External Static Pressure (in. W.C.)		Heating	0.10	0.12	0.15	0.15	0.20	0.20	0.20
		Cooling	0.5	0.5	0.5	0.5	0.5	0.5	0.5
Airflow Delivery @ Rated ESP (CFM)		High Heat	910	980	1030	1115	1480	1550	2070
		Cooling	970	1505	1555	1885	1490	1970	2050
Cooling Capacity (tons)		400CFM/ton	2.5	3.5	4.0	4.5	3.5	5.0	5.0
		350CFM/ton	2.5	4.0	4.5	5.0	4.0	5.5	5.5
Direct-Drive Motor Type			Permanent Split Capacitor (PSC)						
Direct-Drive Motor HP			0.3	.5	0.5	0.75	0.5	1	1
Motor Full Load Amps			4.6	7.9	7.4	7.9	6.5	11.1	11.1
RPM Range			500 - 1150						
Speed Selections			4	4	5	5	4	4	4
Blower Wheel Dia x Width		in.	11 x 7	11 x 8	11 x 8	11 x 10	11 x 10	11 x 10	11 x 11
Air Filtration System			Field Supplied						
Filter Used for Certified Watt Data*			KGAWF**06UFR						
Electrical Data			**30040**	**48060**	**48080**	**60080**	**48100**	**60100**	**60120**
Input Voltage		Volts-Hertz-Phase	115-60-1						
Operating Voltage Range		Min-Max	104-127						
Maximum Input Amps		Amps	5.2	8.6	8.1	8.6	7.3	11.9	11.9
Unit Ampacity		Amps	7.5	11.7	11.1	11.7	10.1	15.8	15.8
Minimum Wire Size		AWG	14	14	14	14	14	12	12
Maximum Wire Length @ Minimum Wire Size		Feet	49	31	33	31	36	36	36
		(M)	(14.9)	(9.4)	(10.1)	(9.4)	(11.0)	(11.0)	(11.0)
Maximum Fuse/Ckt Bkr (Time-Delay Type Recommended)		Amps	15	15	15	15	15	20	20
Transformer Capacity (24vac output)			40 VA						
External Control Power Available		Heating	27.9 VA						
		Cooling	34.6 VA						
Controls			**30040**	**48060**	**48080**	**60080**	**48100**	**60100**	**60120**
Gas Connection Size			1/2" - NPT						
Burners (Monoport)			2	3	4	4	5	5	6
Gas Valve (Redundant)		Manufacturer	White Rodgers						
Minimum Inlet Gas pressure (in. W.C.)			4.5						
Maximum Inlet Gas pressure (in. W.C.)			13.6						
Ignition Device			Silicon Nitride						
Limit Control			195	190	185	195	220	220	165
Heating Blower Control (Heating Off-Delay)			Adjustable: 90, 120, 150, 180 seconds						
Cooling Blower Control (Time Delay Relay)			90 seconds						
Communication System			*none*						
Thermostat Connections			Com 24V, R, W, G, Y						
Accessory Connections			EAC (115vac); HUM (24vac)						

* See Accessory List for part numbers available.

MODEL NUMBER NOMENCLATURE

Example of a Model Number

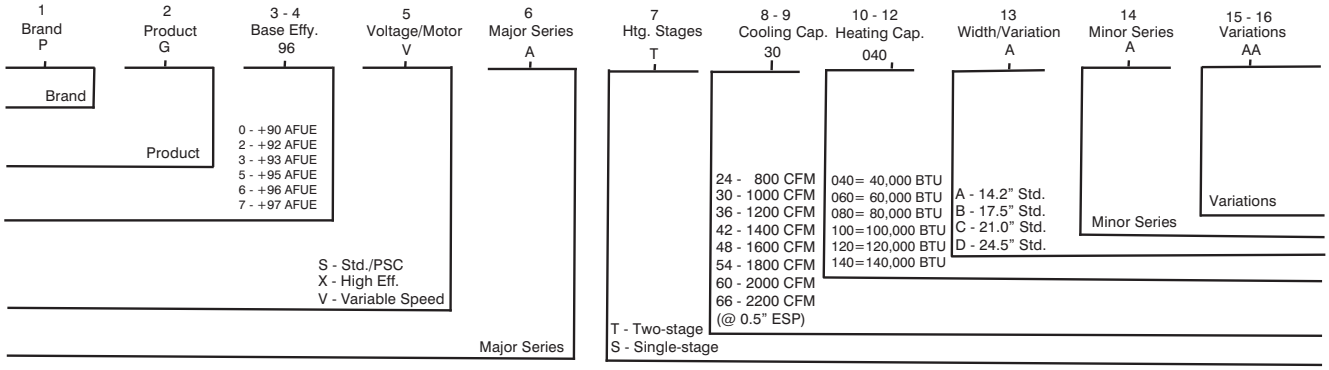

Not all familes have these models.

A12375

PG92SCS

FURNACE COMPONENTS

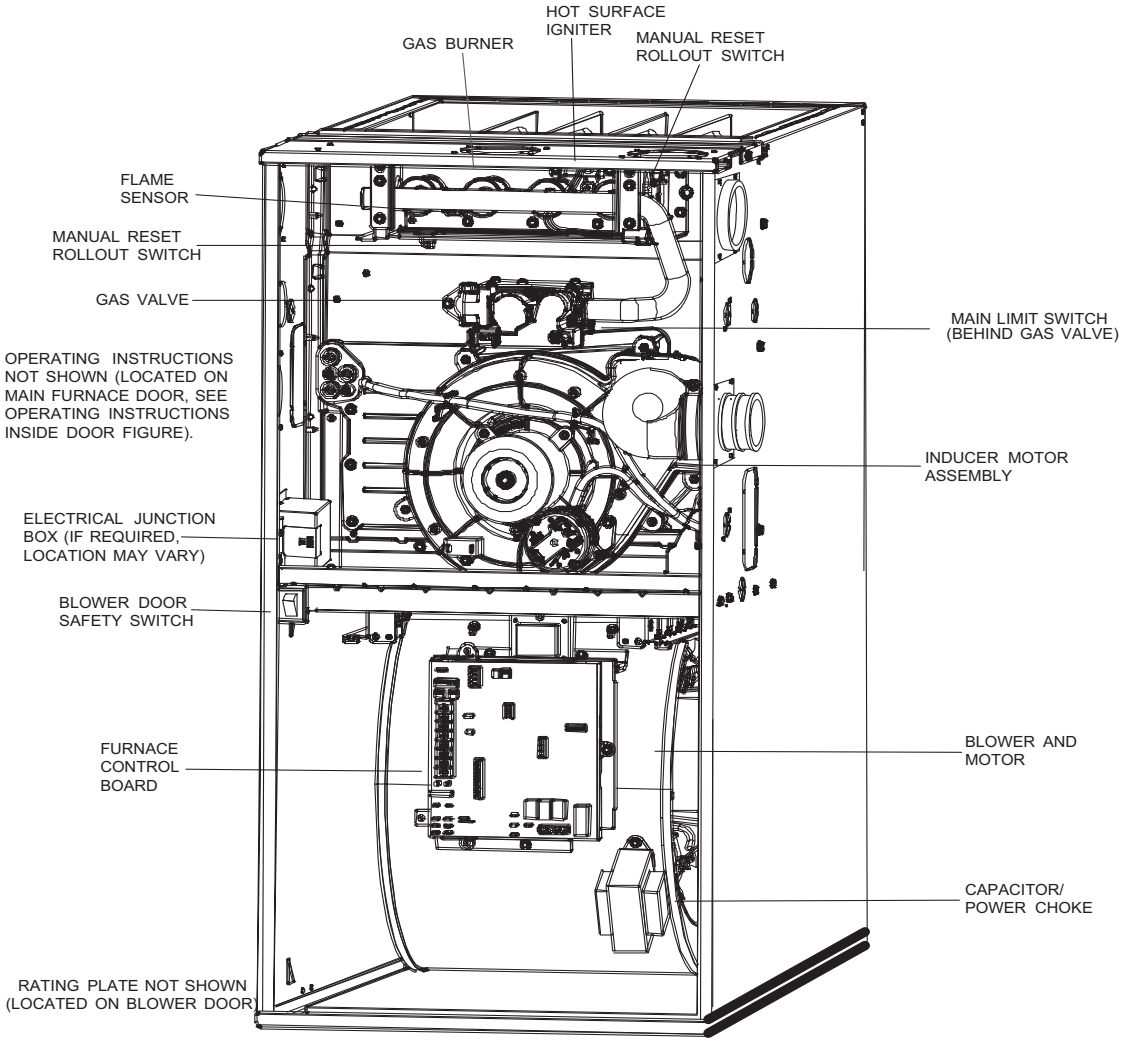

REPRESENTATIVE DRAWING ONLY, SOME MODELS MAY VARY IN APPEARANCE.

A170127

ACCESSORIES

DESCRIPTION	PART NUMBER	30040	48060	48080	60080	48100	60100	60120
Venting Accessories								
Vent Kit - Through the Cabinet	KGADC0101BVC	●	●	●	●	●	●	●
Vent Terminal - Concentric - 2” (51 mm)	KGAVT0701CVT	See Venting Tables						
Vent Terminal - Concentric - 3” (76 mm)	KGAVT0801CVT							
Vent Terminal Bracket - 2” (51 mm)	KGAVT0101BRA							
Vent Terminal Bracket - 3” (76 mm)	KGAVT0201BRA							
Vent Kit — Rubber Coupling	KGAAC0101RVC	See Venting Tables						
Condensate Drainage Accessories								
Freeze Protect Kit - Trap Heater	KGAHT0201CFP	●	●	●	●	●	●	●
CPVC to PVC Drain Adapters - 1/2” CPVC to 3/4” PVC	KGAAD0110PVC	●	●	●	●	●	●	●
Horizontal Trap Grommet - Direct Vent	KGACK0101HCK	All DV Horizontal						
Condensate Neutralizer Kit	P908—0001	●	●	●	●	●	●	●
External Trap Kit	KGAET0201ETK	●	●	●	●	●	●	●
Ductwork Adapter Accessories								
Furnace Base Kit for Combustible Floors	KGASB0201ALL	●	●	●	●	●	●	●
Coil Adapter Kits — No Offset	KGADA0101ALL	●	●	●	●	●	●	●
Coil Adapter Kits — Single Offset	KGADA0201ALL	●	●	●	●	●	●	●
Coil Adapter Kits — Double Offset	KGADA0301ALL	●	●	●	●	●	●	●
Return Air Base (Upflow Applications) 14.0—in. wide	KGARP0301B14	●						
Return Air Base (Upflow Applications) 17.5—in. wide	KGARP0301B17		●	●				
Return Air Base (Upflow Applications) 21.0—in. wide	KGARP0301B21				●	●	●	
Return Air Base (Upflow Applications) 24.5—in. wide	KGARP0301B24							●
IAQ Device Duct Adapters 20.0—in. IAQ to 16 in. Side Return	KGAAD0101MEC	20”x25” IAQ Devices						
IAQ Device Duct Adapters 24.0—in. IAQ to 16 in. Side Return	KGAAD0201MEC	24”x25” IAQ Devices						
Gas Conversion Accessories								
Mobile Home Kit	KGBMH0601KIT	●	●	●	●	●	●	●
Gas Conversion Kit - Nat to LP	KGBNP50011SP	●	●	●	●	●	●	●
Gas Conversion Kit - LP to Nat	KGBPN42011SP	●	●	●	●	●	●	●
Gas Orifice Kit - #42 (Nat Gas)	LH32DB207	●	●	●	●	●	●	●
Gas Orifice Kit - #43 (Nat Gas)	LH32DB202	●	●	●	●	●	●	●
Gas Orifice Kit - #44 (Nat Gas)	LH32DB200	●	●	●	●	●	●	●
Gas Orifice Kit - #45 (Nat Gas)	LH32DB205	●	●	●	●	●	●	●
Gas Orifice Kit - #46 (Nat Gas)	LH32DB208	●	●	●	●	●	●	●
Gas Orifice Kit - #47 (Nat Gas)	LH32DB078	●	●	●	●	●	●	●
Gas Orifice Kit - #48 (Nat Gas)	LH32DB076	●	●	●	●	●	●	●
Gas Orifice Kit - #54 (LP)	LH32DB203	●	●	●	●	●	●	●
Gas Orifice Kit - #55 (LP)	LH32DB201	●	●	●	●	●	●	●
Gas Orifice Kit - #56 (LP)	LH32DB206	●	●	●	●	●	●	●
Gas Orifice Kit - 1.25mm (LP)	LH32DB209	●	●	●	●	●	●	●
Gas Orifice Kit - 1.30mm (LP)	LH32DB210	●	●	●	●	●	●	●
Control Accessories								
Twinning Kit	KGATW0701HSI		●	●	●	●	●	●
IAQ Accessories								
Filter Rack — Side Return for 1” Filters	KGAFR0201ALL	●	●	●	●	●	●	●
Filter Rack — Bottom Return for 1” Filters — 14.2” wide	KGBFR0401B14	●						
Filter Rack — Bottom Return for 1” Filters — 17.5” wide	KGBFR0501B17		●	●				
Filter Rack — Bottom Return for 1” Filters — 21.0” wide	KGBFR0601B21				●	●	●	
Filter Rack — Bottom Return for 1” Filters — 24.5” wide	KGBFR0701B24							●
Filter Pack (6 pack) — Washable - 16x25x1	KGAWF1306UFR	●	●	●	●	●	●	●
Filter Pack (6 pack) — Washable - 24x25x1	KGAWF1506UFR	●	●	●	●	●	●	●
EZ-Flex Filter - 16” (406 mm)	EXPXXFIL0016	Use with EZXCAB—1016						
EZ-Flex Filter - 20” (508 mm)	EXPXXFIL0020	Use with EZXCAB—1020						
EZ-Flex Filter - 24” (610 mm)	EXPXXFIL0024	Use with EZXCAB—1024						
EZ-Flex Filter with End Caps - 16” (406 mm)	EXPXXUNV0016	Use with EZXCAB—1016						
EZ-Flex Filter with End Caps - 20” (508 mm)	EXPXXUNV0020	Use with EZXCAB—1020						
EZ-Flex Filter with End Caps - 24” (610 mm)	EXPXXUNV0024	Use with EZXCAB—1024						
Cartridge Media Filter - 16” (406 mm)	FILXXCAR0016	Use with FILCABXL—1016						
Cartridge Media Filter - 20” (508 mm)	FILXXCAR0020	Use with FILCABXL—1020						
Cartridge Media Filter - 24” (610 mm)	FILXXCAR0024	Use with FILCABXL—1024						

● = Used with the model furnace

AIR DELIVERY – CFM (BOTTOM RETURN WITH FILTER)

Furnace	Return Air Connection	Wire Lead Color	Cooling Tons	CFM / Ton	Test Airflow Delivery @ Various External Static Pressures									
					0.1	0.2	0.3	0.4	0.5	0.6	0.7	0.8	0.9	1
030040	SIDE/BOTTOM	Black	2.5	388	1145	1100	1060	1015	970	920	860	785	**680**	**615**
		Blue	2.0	413	970	940	905	870	825	775	730	675	570	**505**
		Yellow	2.0	385	910	880	845	810	770	725	675	600	535	**475**
		Red	1.5	397	725	695	665	635	595	555	510	460	**390**	**340**
048060	SIDE/BOTTOM	Black	4.0	376	1600	1545	1505	1475	1505	1445	1400	1330	1235	1140
		Yellow	3.5	377	1380	1340	1335	1330	1320	1285	1225	1155	1085	1000
		Blue [3]	3.0	387	1190	1185	1195	1195	1160	1125	1075	1015	950	885
		Red [3]	2.5	394	1030	1025	1030	1010	985	940	905	855	805	735
048080 (Series B Only)	SIDE/BOTTOM	Black	4.0	408	1800	1770	1735	1685	1630	1570	1495	1415	1330	1230
		Yellow	3.5	386	1445	1430	1410	1385	1350	1305	1255	1195	1120	1045
		Orange	3.0	390	1250	1240	1225	1200	1170	1130	1090	1040	975	910
		Blue	2.5	404	1090	1080	1060	1035	1010	970	930	885	835	765
		Red [3]	2.0	390	880	860	835	810	780	750	710	665	615	560
060080	BOTTOM or TWO-SIDES [4, 5]	Black	5.0	377	2225	2160	2070	1980	1885	1790	1690	1575	1460	1345
		Yellow	4.0	386	1690	1665	1640	1595	1545	1485	1410	1330	1235	1135
		Orange	3.5	397	1485	1470	1455	1430	1390	1340	1280	1205	1120	1035
		Blue [3]	2.5	426	1120	1110	1100	1090	1065	1035	990	935	870	805
		Red [3]	2.0	433	940	920	910	890	865	830	790	745	690	625
048100	SIDE/BOTTOM	Black	4.0	373	1715	1660	1610	1555	1490	1420	1340	1245	1150	1065
		Yellow [3]	3.5	379	1535	1480	1435	1380	1325	1260	1180	1095	1010	910
		Blue [3]	3.0	367	1300	1255	1205	1160	1100	1035	970	905	810	730
		Red [3]	2.0	445	1110	1055	1005	955	890	835	770	690	610	535
060100	BOTTOM or TWO-SIDES [4, 5]	Black	5.0	394	2270	2205	2130	2055	1970	1880	1780	1670	1555	1425
		Yellow	5.0	367	2090	2040	1980	1910	1835	1755	1670	1570	1460	1340
		Blue	4.0	416	1850	1815	1775	1725	1665	1600	1525	1435	1335	1225
		Red	3.5	421	1580	1550	1540	1515	1475	1420	1355	1280	1190	1100
060120	BOTTOM or TWO-SIDES [4, 5]	Black	5.0	410	2385	2310	2230	2150	2050	1920	1780	1650	1540	1415
		Yellow	5.0	369	2130	2070	2010	1940	1845	1740	1630	1525	1420	1305
		Blue	4.0	416	1875	1840	1795	1735	1665	1580	1495	1410	1310	1205
		Red [3]	3.5	414	1610	1585	1555	1515	1450	1395	1325	1250	1160	1080

NOTE:

1. A filter is required for each return–air inlet. Airflow performance includes a 3/4–in. (19 mm) washable filter media such as contained in a factory–authorized accessory filter rack. See accessory list. To determine airflow performance without this filter, assume an additional 0.1 in. W.C.. available external static pressure.
2. **ADJUST THE BLOWER SPEED TAPS AS NECESSARY FOR THE PROPER AIR TEMPERATURE RISE FOR EACH INSTALLATION.**
3. Shaded areas indicate that this airflow range is BELOW THE RANGE ALLOWED FOR HEATING OPERATION.
4. Airflows over 1800 CFM require bottom return, two–side return, or bottom and side return. A minimum filter size of 20” x 25” (508 x 635 mm) is required.
5. For upflow applications, air entering from one side into both the side of the furnace and a return air base counts as a side and bottom return.
6. All airflows that are shown in **BOLD** exceed 0.58 watts per CFM at the given external static pressure.

MAXIMUM ALLOWABLE EXPOSED VENT LENGTH

Table 1 – Maximum Equivalent Vent Length

NOTE: Maximum Equivalent Vent Length (MEVL) includes standard and concentric vent termination and does NOT include elbows. Use Table 2 – Deductions from Maximum Equivalent Vent Length to determine allowable vent length for each application.

Single Stage 92% — Ft.																				
Altitude (feet)	Unit Size	40,000 [1]			60,000 [2]				80,000					100,000 [3]				120,000 [3]		
	Pipe Dia. (in)	1 ½	2	2 ½	1 ½	2	2 ½	3	1 ½	2	2 ½	3	4	2	2 ½	3	4	2 ½	3	4
	0—2000	20	85	185	20	100	175	200	15	55	130	175	200	20	80	175	200	10	75	185
	2001—3000	15	80	175		95	165	185	10	49	125	165	185	15	75	165	185		70	175
	3001—4000		70	160	16	90	155	175			115	155	175			155	175	5	65	165
	4001—4500	10		155	15	85	150	170		44	110	150	165	10	70		170	N/A	60	160
	4501—5000			145		80		165				145	160		65	150	165			
	5001—6000		60	130		75	140	155		41	100	135	150			140	155			155
	6001—7000	5	55	120	13	70	130	145	N/A	38	90	125	140		60	135	145		50	140
	7001—8000		50	110	10	65	120	135		36		120	125	N/A	55	125	135		46	130
	8001—9000	N/A	30	95	5	60	115	125		33	80	110	115		50	115	125		43	120
	9001—10000		25	85	N/A	55	105	115		30	75	100	105		45	100	115		39	115
Single Stage 92% — Metric																				
Altitude (meters)	Unit Size	40,000 [1]			60,000 [2]				80,000					100,000 [3]				120,000 [3]		
	Pipe Dia. (mm)	38	51	64	38	5	64	76	38	51	64	76	102	51	64	76	102	64	76	102
	0—610	6.0	25.9	56.3	6.0	30.4	53.3	60.9	4.5	16.7	39.6	53.3	60.9	6.0	24.3	53.3	60.9	3.0	22.8	56.3
	611—914	4.5	24.3	53.3		28.9	50.2	56.3	3.0	14.9	38.1	50.2	56.3	4.5	22.8	50.2	56.3		21.3	53.3
	915—1219			48.7	4.8	27.4	47.2	53.3			35.0	47.2	53.3		0.0	47.2	53.3	1.5	19.8	50.2
	1220—1370	3.0	21.3	47.2	4.5	25.9	45.7	51.8		13.4	33.5	45.7	50.2	3.0	21.3		51.8	N/A	18.2	48.7
	1371—1524			44.1		24.3		50.2			0.0	44.1	48.7		19.8	45.7	50.2			
	1525—1829		18.2	39.6		22.8	42.6	47.2		12.4	30.4	41.1	45.7		0.0	42.6	47.2			47.2
	1830—2134	1.5	16.7	36.5	3.9	21.3	39.6	44.1	N/A	11.5	27.4	.1	42.6		18.2	41.1	44.1		15.2	42.6
	2135—2438		15.2	33.5	3.0	19.8	36.5	41.1		10.9	0.0	36.5	38.1	N/A	16.7	38.1	41.1		14.0	39.6
	2439—2743	N/A	9.1	28.9	1.5	18.2	35.0	38.1		10.0	24.3	33.5	35.0		15.2	35.0	38.1		13.1	36.5
	2744—3048		7.6	25.9	N/A	16.7	32.0	35.0		9.1	22.8	30.4	32.0		13.7	30.4	35.0		11.8	35.0

NOTES:

1. Inducer Outlet Restrictor disk (P/N 337683—401; 1.25—in. (32 mm) Dia.) shipped in the loose parts bag or available through Replacement Components required under 10—ft. (3 M) TEVL in all orientations. Required for installations from 0 — 2000 (0 to 610 M) above sea level. Failure to use an outlet restrictor may result in flame disturbances or flame sense lock—out.
2. Inducer Outlet Restrictor disk (P/N 337683—401; 1.25—in. (32 mm) Dia.) available through Replacement Components required for no greater than 5—ft. (1.5 M) TEVL in downflow and horizontal orientations only. Required for installations from 0 — 2000 (0 to 610 M) above sea level.
3. Inducer Outlet Restrictor disk (P/N 337683—402; 1.50—in. (38 mm) Dia.) available through Replacement Components required for no greater than 5—ft. (1.5 M) TEVL in downflow and horizontal orientations only. Required for installations from 0 — 2000 (0 to 610 M) above sea level.

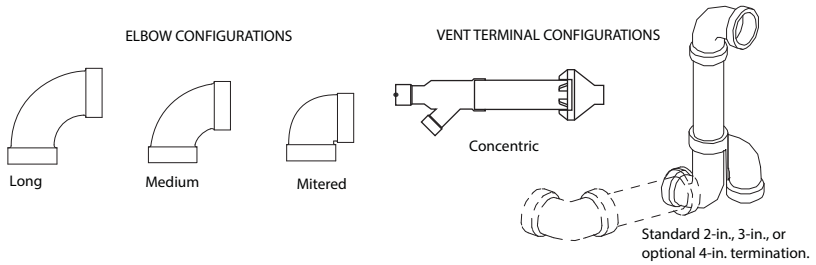

A13110

Table 2 – Deductions from Maximum Equivalent Vent Length – Ft. (M)

Pipe Diameter (in):	1-1/2		2		2-1/2		3		4	
Mitered 90º Elbow	8	(2.4)	8	(2.4)	8	(2.4)	8	(2.4)	8	(2.4)
Medium Radius 90º Elbow	5	(1.5)	5	(1.5)	5	(1.5)	5	(1.5)	5	(1.5)
Long Radius 90º Elbow	3	(0.9)	3	(0.9)	3	(0.9)	3	(0.9)	3	(0.9)
Mitered 45º Elbow	4	(1.2)	4	(1.2)	4	(1.2)	4	(1.2)	4	(1.2)
Medium Radius 45º Elbow	2.5	(0.8)	2.5	(0.8)	2.5	(0.8)	2.5	(0.8)	2.5	(0.8)
Long Radius 45º Elbow	1.5	(0.5)	1.5	(0.5)	1.5	(0.5)	1.5	(0.5)	1.5	(0.5)
Tee	16	(4.9)	16	(4.9)	16	(4.9)	16	(4.9)	16	(4.9)

NOTES:

1. Use only the smallest diameter pipe possible for venting. Over—sizing may cause flame disturbance or excessive vent terminal icing or freeze—up.
2. NA — Not allowed. Pressure switch will not close, or flame disturbance may result.
3. Vent sizing for Canadian installations over 4500 ft. (1370 M) above sea level are subject to acceptance by the local authorities having jurisdiction.
4. Size both the combustion air and vent pipe independently, then use the larger size for both pipes.
5. Assume the two 45° elbows equal one 90° elbow. Wide radius elbows are desirable and may be required in some cases.
6. Elbow and pipe sections within the furnace casing and at the vent termination should not be included in vent length or elbow count.
7. The minimum pipe length is 5 ft. (2 M) linear feet (meters) for all applications.
8. Use 3—in. (76 mm) diameter vent termination kit for installations requiring 4—in. (102 mm) diameter pipe.

Venting System Length Calculations

The Total Equivalent Vent Length (TEVL) for **EACH** combustion air or vent pipe equals the length of the venting system, plus the equivalent length of elbows used in the venting system from Table 2.

Standard vent terminations or factory accessory concentric vent terminations count for zero deduction.

See vent system manufacturer's data for equivalent lengths of flexible vent pipe or other termination systems. **DO NOT ASSUME** that one foot of flexible vent pipe equals one foot of straight PVC/ABS DWV vent pipe.

Compare the Total Equivalent Vent Length to the Maximum Equivalent Vent Lengths in Table 1.

Example 1

A direct-vent 60,000 BTUH furnace installed at 2100 ft. (640M). Venting system includes **FOR EACH PIPE:**
70 feet (22 M) of vent pipe, 65 feet (20 M) of combustion air inlet pipe, (3) 90º long-radius elbows, (2) 45º long-radius elbows, and a factory accessory concentric vent kit.

Can this application use 2" (50 mm ND) PVC/ABS DWV vent piping?

Measure the required linear length of air inlet and vent pipe; insert the longest of the two here					70 ft. (22 M)	Use length of the longer of the vent or air inlet piping system
Add equiv length of (3) 90° long-radius elbows (use the highest number of elbows for either the vent or inlet pipe)	3	x	3 ft. (0.9 M)	=	9 ft. (2.7 M)	From Table 2
Add equiv length of (2) 45° long-radius elbows (use the highest number of elbows for either the vent or inlet pipe)	2	x	1.5 ft. (0.5 M)	=	3 ft. (0.9 M)	From Table 2
Add equiv length of factory concentric vent term					0 ft.	From Table 2
Add correction for flexible vent pipe, if any					0 ft.	From Vent Manufacturer's instructions; zero for PVC/ABS DWV
Total Equivalent Vent Length (TEVL)					82 ft. (25 M)	Add all of the above lines
Maximum Equivalent Vent Length (MEVL)					95 ft. (29 M)	For 2" pipe from Table 1
Is TEVL less than MEVL?					**YES**	**Therefore, 2" pipe MAY be used**

Example 2

A direct-vent 60,000 BTUH furnace installed at 2100 ft. (640M). Venting system includes **FOR EACH PIPE:**
100 feet (30 M) of vent pipe, 95 feet (29 M) of combustion air inlet pipe, (3) 90º long-radius elbows, and a polypropylene concentric vent kit. Also includes 20 feet (6.1 M) of flexible polypropylene vent pipe, included within the 100 feet (30 M) of vent pipe.

VERIFY FROM POLYPROPYLENE VENT MANUFACTURER'S INSTRUCTIONS for the multiplier correction for flexible vent pipe.

Can this application use 60mm o.d. (2") polypropylene vent piping? If not, what size piping can be used?

Measure the required linear length of **RIGID** air inlet and vent pipe; insert the longest of the two here: 100 ft. Of rigid pipe – 20 ft. Of flexible pipe				=	80 ft. (24 M)	Use length of the longer of the vent or air inlet piping system
Add equiv length of (3) 90° long-radius elbows (use the highest number of elbows for either the vent or inlet pipe)	3	x	5 ft. (1.5 M)	=	15 ft. (4.6 M)	Example from polypropylene vent manufacturer's instructions, Verify from vent manufacturer's instructions.
Add equiv length of 45° long-radius elbows (use the highest number of elbows for either the vent or inlet pipe)	0	x		=	0 ft. (0 M)	
Add equiv length of factory concentric vent term	9	x	3.3 ft (0.9 M)	=	30 ft. (9 M)	
Add correction for flexible vent pipe, if any	2*	x	20 ft. (6.1 M)	=	36 ft. (11 M)	
* VERIFY FROM VENT MANUFACTURER'S INSTRUCTIONS; For example only, assume 1 meter of flexible 60mm (2") or 80mm (3") polypropylene pipe equals 2.0 meters (6.5 ft.) of PVC/ABS pipe.						
Total Equivalent Vent Length (TEVL)					165 ft. (50 M)	Add all of the above lines
Maximum Equivalent Vent Length (MEVL)					95 ft. (29 M)	For 2" pipe from Table 1
Is TEVL less than MEVL?					**NO**	**Therefore, 60mm (2") pipe may NOT be used; try 80mm (3")**
Maximum Equivalent Vent Length (MEVL)					185 ft. (57 M)	For 3" pipe from Table 1
Is TEVL less than MEVL?					**YES**	**Therefore, 80mm (3") pipe MAY be used**

RETURN AIR TEMPERATURE

This furnace is designed for continuous return−air minimum temperature of 60°F (15°C) db or intermittent operation down to 55°F (13°C) db such as when used with a night setback thermometer. Return−air temperature must not exceed 80°F (27°C) db. Failure to follow these return air limits may affect reliability of heat exchangers, motors and controls.

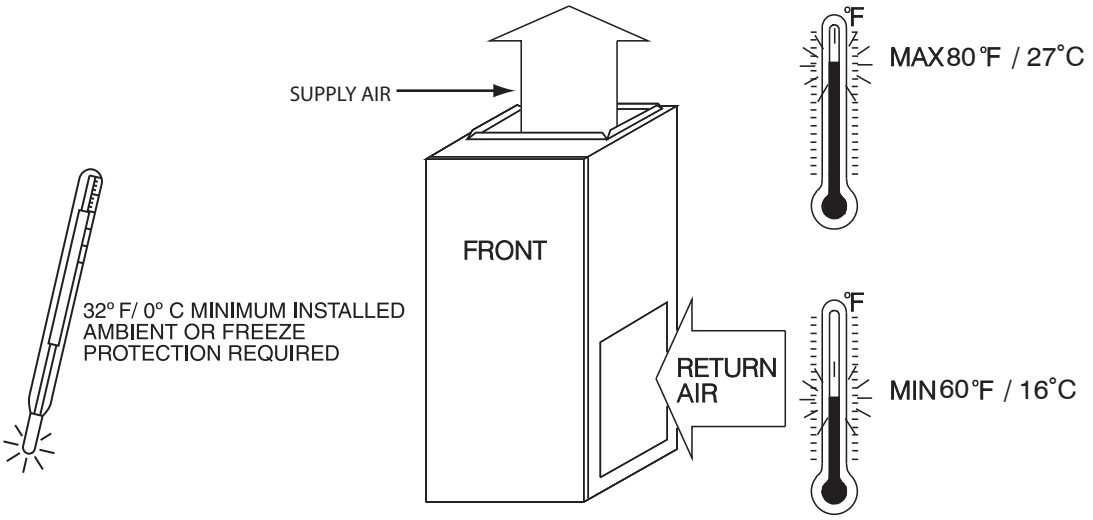

A10490

MINIMUM CLEARANCES TO COMBUSTIBLE MATERIALS

POSITION	CLEARANCE
Rear	0 (0 mm)
Front (Combustion air openings in furnace and in structure)	1 in. (25 mm)
Required for service**	24 in. (610 mm)*
All Sides of Supply Plenum**	1 in. (25 mm)
Sides	0 (0 mm)
Vent	0 (0 mm)
Top of Furnace	1 in. (25 mm)

* Recommended
**Consult your local building codes

COMBUSTION−AIR PIPE FOR NON−DIRECT (1−PIPE) VENT APPLICATION

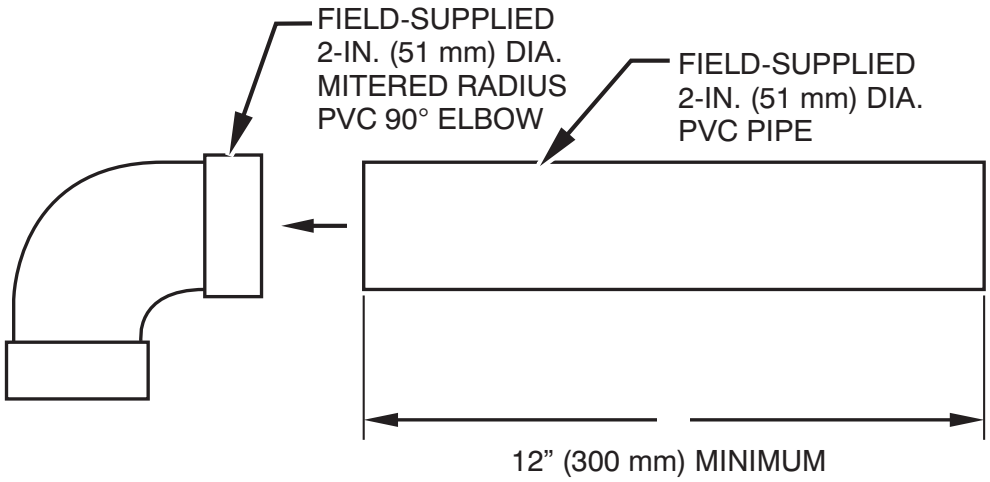

A12376

NOTE: See Installation Instructions for specific venting configurations.

PG92SCS

RESTRICTIONS IN HORIZONTAL CONFIGURATIONS

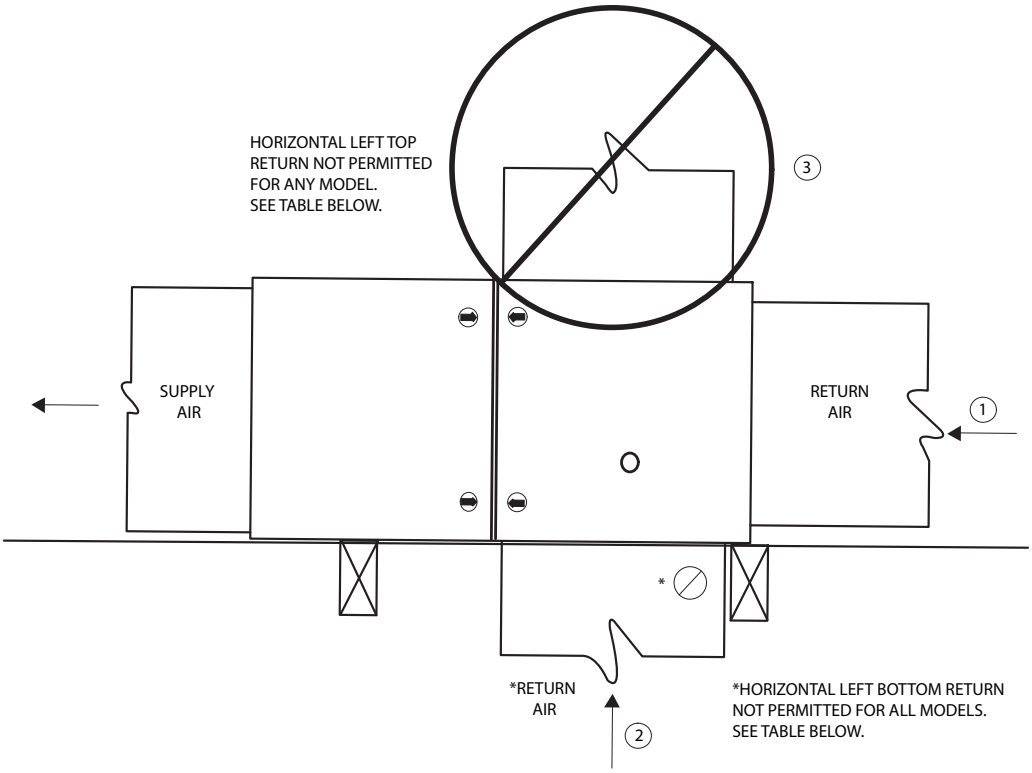

A14006

INPUT*	CASING WIDTH INCHES	HORIZONTAL LEFT RETURN AIR CONNECTIONS			
		CONNECTION AT 1 ONLY	CONNECTION AT 2 ONLY	CONNECTION AT 3 ONLY	COMBINATION OF 1 & 2
40,000	14 3/16	YES	YES	**NO**	YES
	17 1/2	YES	YES	**NO**	YES
60,000	14 3/16	YES	YES	**NO**	YES
	17 1/2	YES	**NO**	**NO**	YES
80,000	17 1/2	YES	YES	**NO**	YES
	21	YES	YES	**NO**	YES
100,000	21	YES	YES	**NO**	YES
120,000	24 1/2	YES	YES	**NO**	YES

INPUT*	CASING WIDTH INCHES	HORIZONTAL RIGHT RETURN AIR CONNTECIONS			
		CONNECTION AT 1 ONLY	CONNECTION AT 2 ONLY	CONNECTION AT 3 ONLY	COMBINATION OF 1 & 2
40,000	14 3/16	YES	YES	**NO**	YES
	17 1/2	YES	YES	**NO**	YES
60,000	14 3/16	YES	YES	**NO**	YES
	17 1/2	YES	YES	**NO**	YES
80,000	17 1/2	YES	YES	**NO**	YES
	21	YES	YES	**NO**	YES
100,000	21	YES	YES	**NO**	YES
120,000	24 1/2	YES	YES	**NO**	YES

NOTE: Not all models may be available in all casing sizes shown in the table above.

DOWNFLOW SUBBASE

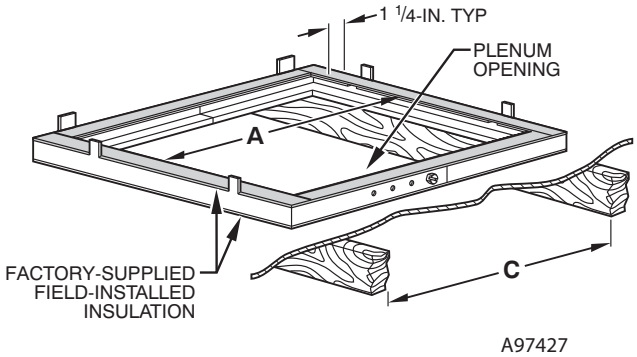

Assembled

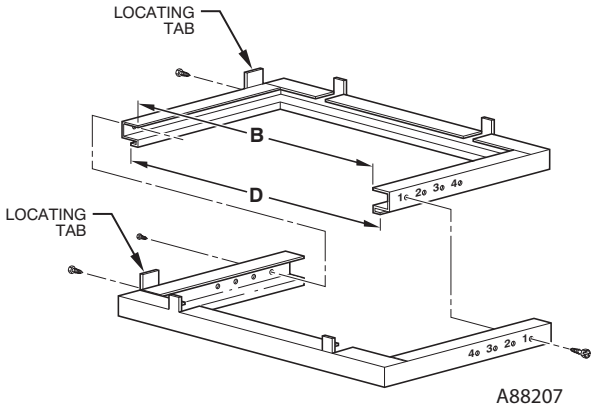

Disassembled

DIMENSIONS (IN. / MM)						
FURNACE CASING WIDTH	FURNACE IN DOWNFLOW APPLICATION	PLENUM OPENING*		FLOOR OPENING		HOLE NO. FOR WIDTH ADJUSTMENT
		A	B	C	D	
14–3/16 (360)	Furnace with or without Cased Coil Assembly or Coil Box	11–3/16 (322)	19 (483)	13–7/16 (341)	20–5/8 (600)	4
17–1/2 (445)	Furnace with or without Cased Coil Assembly or Coil Box	15–1/8 (384)	19 (483)	16–3/4 (426)	20–5/8 (600)	3
21 (533)	Furnace with or without Cased Coil Assembly or Coil Box	18–5/8 (396)	19 (483)	20–1/4 (514)	20–5/8 (600)	2
24–1/2 (622)	Furnace with or without Cased Coil Assembly or Coil Box	22–1/8 (562)	19 (483)	23–3/4 (603)	20–5/8 (600)	1

*The plenum should be constructed 1/4–in. (6 mm) smaller in width and depth than the plenum dimensions shown above.

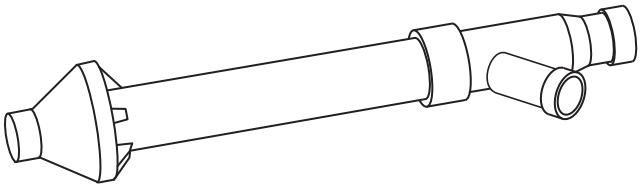

Concentric Vent Kit

A93086

A concentric vent kit allows vent and combustion–air pipes to terminate through a single exit in a roof or side wall. One pipe runs inside the other allowing venting through the inner pipe and combustion air to be drawn in through the outer pipe.

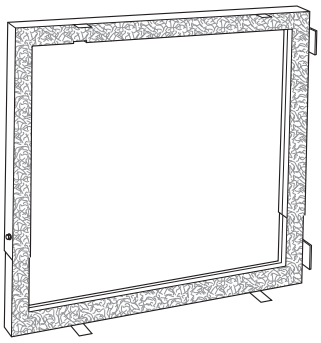

Downflow Subbase

A88202

One base fits all furnace sizes. The base is designed to be installed between the furnace and a combustible floor when no coil box is used or when a coil box other than a Payne cased coil is used. It is CSA design certified for use with Payne branded furnaces when installed in downflow applications.

TYPICAL WIRING SCHEMATIC

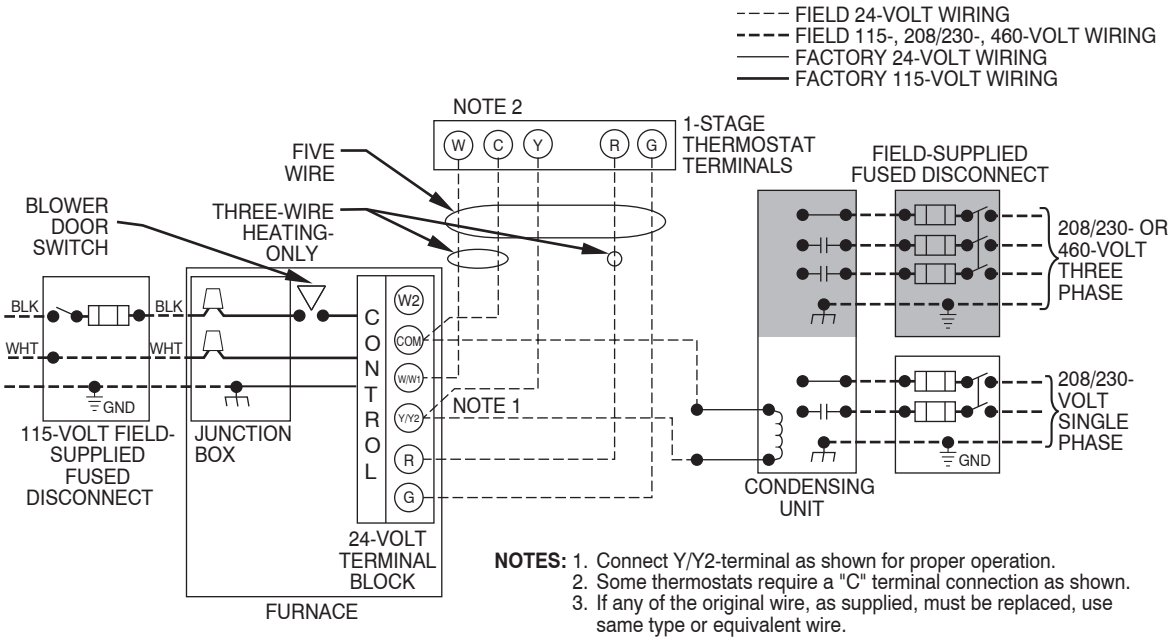

NOTES: 1. Connect Y/Y2-terminal as shown for proper operation.
2. Some thermostats require a "C" terminal connection as shown.
3. If any of the original wire, as supplied, must be replaced, use same type or equivalent wire.

A11401

PG92SCS

DIMENSIONAL DRAWING

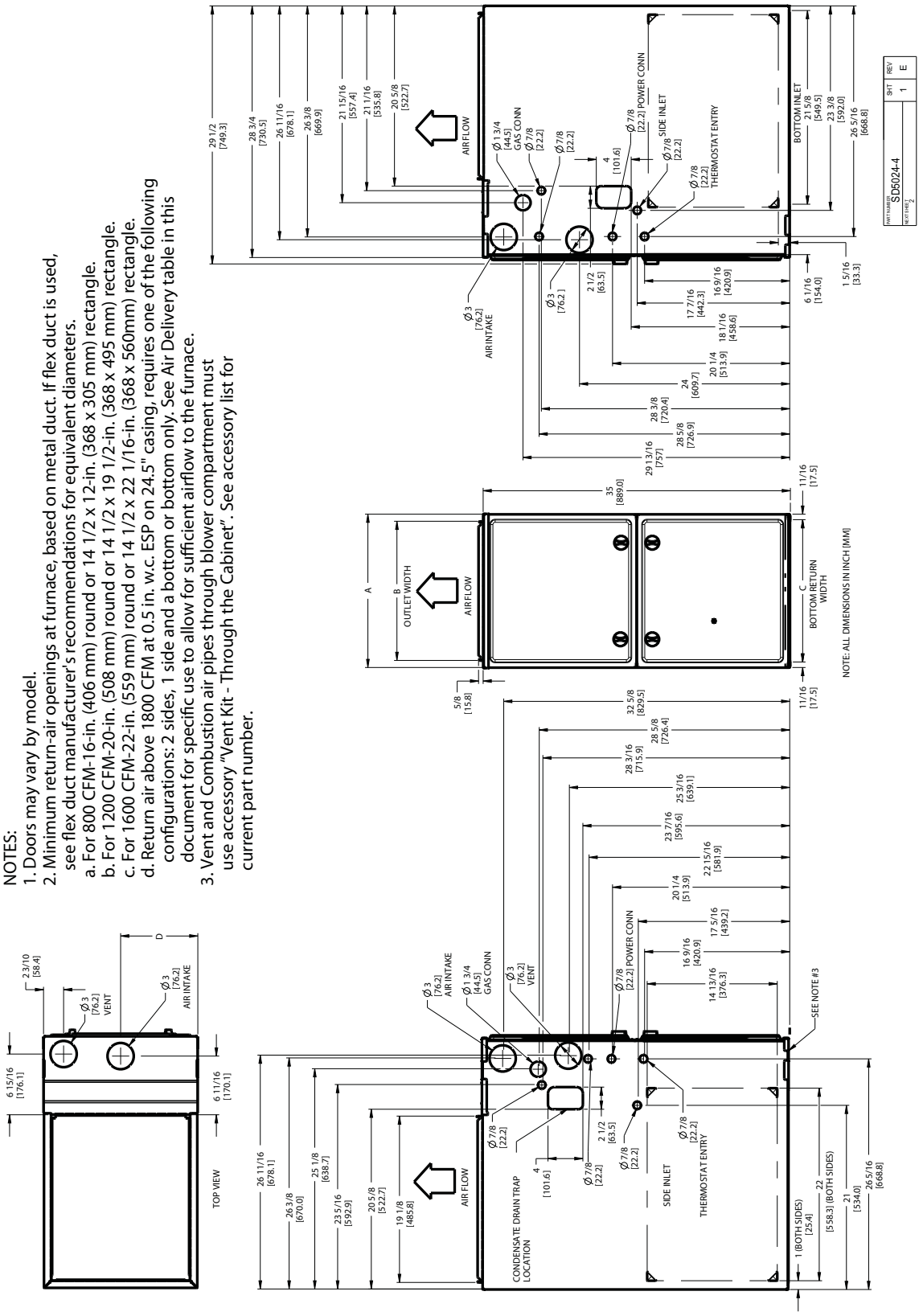

A12267

PG92SCS FURNACE SIZE	A CABINET WIDTH	B OUTLET WIDTH	C BOTTOM INLET WIDTH	D AIR INTAKE	SHIP WT. LB (KG)
30040	14–3/16 (361)	12–1/2 (319)	12–9/16 (322)	7–1/8 (181)	121.0 (55.0)
48060	17–1/2 (445)	15–7/8 (403)	16 (406)	8–3/4 (222)	142.0 (64.5)
48080					151.0 (68.6)
60080	21 (533)	19–3/8 (492)	19–1/2 (495)	10–1/2 (267)	158.5 (72.0)
48100					166.5 (75.7)
60100					166.5 (75.7)
60120	24–1/2 (622)	22–7/8 (581)	23 (584)	12–1/4 (311)	184.0 (83.6)

GUIDE SPECIFICATIONS

General

System Description

Furnish a _____ 4−way multipoise gas−fired condensing furnace for use with natural gas or propane (factory−authorized conversion kit required for propane).

Quality Assurance

Unit will be designed, tested and constructed to the current ANSI Z 21.47/CSA 2.3 design standard for gas−fired central furnaces.

Unit will be third party certified by CSA to the current ANSI Z 21.47/CSA 2.3 design standard for gas−fired central furnaces. Unit will carry the CSA Blue Star® and Blue Flame® labels. Unit efficiency testing will be performed per the current DOE test procedure as listed in the Federal Register.

Unit will be certified for capacity and efficiency and listed in the latest AHRI Consumer's Directory of Certified Efficiency Ratings.

Unit will carry the current Federal Trade Commission Energy Guide efficiency label.

PG92SCS

Delivery, Storage, and Handling

Unit will be shipped as single package only and is stored and handled per unit manufacturer's recommendations.

Warranty (for inclusion by specifying engineer)

U.S. and Canada only. Warranty certificate available upon request.

Equipment

Blower Wheel and PSC Blower Motor

Galvanized blower wheel shall be centrifugal type, statically and dynamically balanced. Blower motor of PSC type shall be permanently lubricated with sleeve bearings, of _____hp, and have multiple speeds from 600−1200 RPM operating only when motor inputs are provided. Blower motor shall be direct drive and soft mounted to the blower scroll to reduce vibration transmission.

Filters

Furnace shall have reusable−type filters. Filter shall be _____ in. (mm) X _____ in. (mm). An accessory highly efficient Media Filter is available as an option. _____ Media Filter.

Casing

Casing shall be of .030 in. thickness minimum, pre−painted steel.

Draft Inducer Motor

Draft inducer motor shall be single−speed PSC design.

Primary Heat Exchangers

Primary heat exchangers shall be 3−Pass corrosion−resistant aluminized steel of fold−and−crimp sectional design and applied operating under negative pressure.

Secondary Heat Exchangers

Secondary heat exchangers shall be of a stainless steel flow−through of fin−and−tube design and applied operating under negative pressure.

Controls

Controls shall include a micro−processor−based integrated electronic control board with at least 16 service troubleshooting codes displayed via diagnostic flashing LED light on the control, a self−test feature that checks all major functions of the furnace, and a replaceable automotive−type circuit protection fuse. Multiple operational settings available, including blower speeds for heating and cooling.

Operating Characteristics

Heating capacity shall be _____ Btuh input; _____ Btuh output capacity.

Fuel Gas Efficiency shall be _____ AFUE.

Air delivery shall be _____ cfm minimum at 0.50 in. W.C. external static pressure.

Dimensions shall be: depth_____in. (mm); width _____in. (mm); height_____in. (mm) (casing only). Height shall be _____in. (mm) with A/C coil and _____in. (mm) overall with plenum.

Electrical Requirements

Electrical supply shall be 115 volts, 60 Hz, single−phase (nominal). Minimum wire size shall be _____AWG; maximum fuse size of HACR−type designated circuit breaker shall be _____ amps.

Special Features

Refer to section of the product data identifying accessories and descriptions for specific features and available enhancements.

©2017 Payne Heating & Cooling Systems • 7310 W. Morris St. • Indianapolis, IN 46231 Edition Date: 08/17

Catalog No: SS−PG92SCS−05

Manufacturer reserves the right to change, at any time, specifications and designs without notice and without obligations.

Replaces: SS−PG92SCS−04