BACnet MS/TP Server

Carrier Ductless Indoor Unit

Gateway for the integration of Carrier air conditioners
into BACnet MS/TP control and monitoring systems

Submittal
ENGLISH
Issue date: 01/2025
Version: 1.0

Gateway for the integration of Carrier air conditioners into BACnet MS/TP control and monitoring systems.

FOR MODEL COMPATIBILITY: Please refer to "**Carrier Intesis DLS Gateway 1:1 and 4:1 Compatibility**" documentation, PMB24-076.

1 Description

1.1 *Introduction*

This document describes the integration of Carrier ductless indoor units into BACnet compatible devices and systems using the *BACnet Server – Carrier ductless* gateway.

The aim of this integration is to monitor and control Carrier indoor units remotely from a Building Management System (BMS). To do so, the CAR-DMS-BAC-001 gateway continuously monitors the AC system bus, keeping track of the status of all signals from the Carrier indoor unit. When the Building Management System (BMS) requests information, the gateway retrieves and sends this data. Conversely, it also relays commands from the BMS to the indoor unit.

The gateway integrates all necessary communication objects, ensuring that each signal from the Carrier unit corresponds to the appropriate BACnet object.

A simple configuration is needed: just set the gateway's built-in DIP switches according to the appropriate communication parameters (MAC address, baud rate, etc.)

This document assumes that the user is familiar with BACnet and Carrier technologies and their technical terms.

Integration of Carrier ductless systems into a BACnet installation

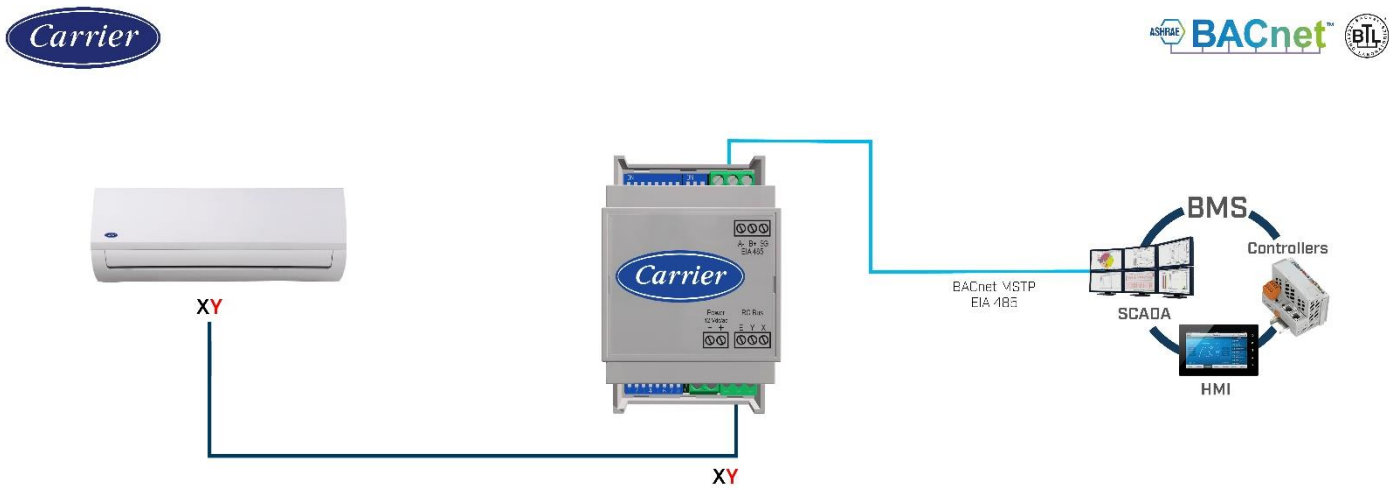

© HMS Industrial Networks S.L.U. - All rights reserved
This information is subject to change without notice

1.2 *Gateway capacity*

Element	Max.	Notes
Number of indoor units	1	Number of indoor units that can be controlled through thegateway

1.3 *Member objects*

1.3.1 Type: Gateway

Object-name	Description	Object-type	Object-instance
Device CAR-DMS-BAC-001	Carrier Ductless to BACnet Gateway	Device	The device instance can be set with the gateway's DIP switch block SW2

1.3.2 Type: Indoor Unit

Object-name	Description	Object-type	Object-instance
OnOff_status	0-Off,1-On	BI	0
On/Off_command	0-Off,1-On	BO	0
Mode_status	1-Heat, 2-Cool, 3-Fan, 4-Dry, 5-Auto	MI	0
Mode_command	1-Heat, 2-Cool, 3-Fan, 4-Dry, 5-Auto	MO	0
Setpoint_status	16 .. 32°C / 61 .. 90°F	AI	0
Setpoint_command	16 .. 32°C / 61 .. 90°F	AO	0
FanSpeed_status	1-Auto, 2-Fan Speed 1, 3-Fan Speed 2, 4-Fan Speed 3	MI	1
FanSpeed_command	1-Auto, 2-Fan Speed 1, 3-Fan Speed 2, 4-Fan Speed 3	MO	1
AirDirectionUD_status	1-Stop, 2-Swing	MI	2
AirDirectionUD_command	1-Stop, 2-Swing	MO	2
RoomTemperature_status	-20 .. 100°C / -4 .. 212°F	AI	1
RoomTemperature_command	-20 .. 100°C / -4 .. 212°F	AO	1
ErrorCode	-1 .. 6846	AI	2
ErrorCodeM	1 .. 33	MI	4
ErrorActive	0-No, 1-Error	BI	1
OnTimeCounter	0 .. 65535 h	AV	0
Occupancy	1-Occupied, 2-Unoccupied, 3-Disabled	MV	0
OccupiedCoolSetpoint	0 .. 65535 (°C/°F)	AV	1
OccupiedHeatSetpoint	0 .. 65535 (°C/°F)	AV	2
UnoccupiedCoolSetpoint	0 .. 65535 (°C/°F)	AV	3
UnoccupiedHeatSetpoint	0 .. 65535 (°C/°F)	AV	4
OccupancyContinuousCheck	0-Disabled, 1-Enabled	BV	0
UnoccupiedDeadBandAction	0-Off, 1-CurrentMode	BV	1
RemoteControllerProhibit_status	1-Unlocked, 2-Locked	MI	6
RemoteControllerProhibit_command	1-Unlocked, 2-Locked	MO	5
DIP_SW_S1_status	0 .. 255	AI	9
DIP_SW_S2_status	0 .. 255	AI	10
SerialNumber	00000 .. 99999	AI	11
AC_IU_address	1 .. 64	MV	1
Midea_setting	1-Auto (detecting), 2-Auto V4, 3-Auto V6, 4-V4, 5-V6	MI	11

© HMS Industrial Networks S.L.U. - All rights reserved
This information is subject to change without notice

2 Connections

NOTE: When mounting the gateway, leave enough clear space to wire it easily and for the subsequent manipulation of elements such as connectors, DIP switches, etc.

Find below information regarding the available gateway connections.

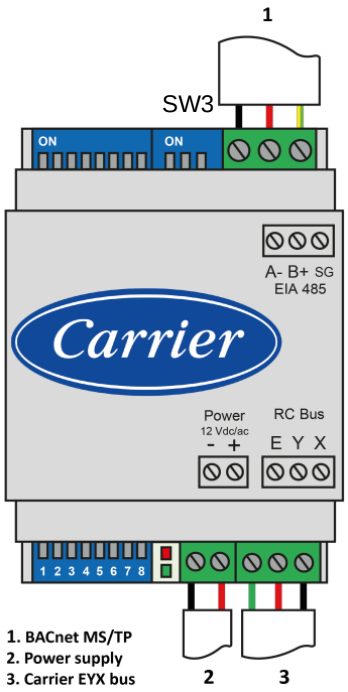

1. EIA 485 Port
Connect the BACnet MS/TP bus to the A-, B+, and SG connectors of the gateway's EIA485 port. Respect the polarity.

NOTE: Remember the characteristics of the standard EIA 485 bus: maximum distance of 1200 meters, maximum 32 devices connected to the bus, and in each end of the bus, there must be a termination resistor of 120 Ω. The port includes a DIP switch (SW3) for the configuration of the biasing circuit as well as the termination:

Position			Description
1	2	3	
OFF	X	X	120 Ω termination inactive (default)
ON	X	X	120 Ω termination active
X	OFF	OFF	Polarization inactive (default)
X	ON	ON	Polarization active

If the gateway is installed at an end of the BACnet MS/TP bus, make sure the 120 Ω termination is active (position 1: ON).

2. Power Supply
Use a SELV, NEC class 2, or Limited Power Source (LPS) power supply.
Supply the correct voltage and power: 12 VDC/AC, 0.2 A
The maximum distance between the gateway and the power source is three meters (9.84 feet).

3. RC Bus
Connect the Carrier air conditioning network bus (EYX) to the gateway's RC Bus EYX port. Respect the polarity

3 Electrical & Mechanical Features

Housing	Plastic, type PC (UL 94 V-0) Net dimensions (HxWxD): 93 x 53 x 58 mm / 3.7 x 2.1 x 2.3" Color: Light grey. RAL 7035
Weight	85 g (3 oz)
Terminal wiring	Wire cross-section/gauge per terminal: One core: 0.2 .. 2.5 mm2 (24 .. 11 AWG) Two cores: 0.2 .. 1.5mm2 (24 .. 15 AWG) Three cores: Not permitted Use solid or stranded wires (twisted or with ferrule).
Power supply	SELV-rated NEC class 2 or limited power source (LPS) power supply 12 VDC/AC; 0.2 A Max. distance to the power supply: 3 m (9.8 ft)
Mounting	Wall or DIN rail
EIA 485 port	1 x pluggable terminal block (3 poles: A-, B+, and SG)
AC unit port	1 x RC5 or serial EIA-485 pluggable terminal block (3 poles: EYX)

LED indicators	2 x Communication status
DIP switches	SW1: Gateway and baud rate configuration SW2: MAC address and temperature unit SW3: Bus polarization and termination: • Position 1: • On: 120 Ω termination active • Off: 120 Ω termination inactive (default) • Positions 2 and 3: • On: Polarization active • Off: Polarization inactive (default)
Operational and storage temperature	Operational: 0 .. 60°C (32 .. 140°F) Storage: -20 .. 85°C (-4 .. 185°F)
Operational and storage humidity	Operational: 5% to 95% RH non-condensing Storage: <95% RH non-condensing
Isolation voltage	1500 VDC between EIA-485 and RC5 buses
Isolation resistance	1000 MΩ

© HMS Industrial Networks S.L.U. - All rights reserved
This information is subject to change without notice

4 Dimensions

Net dimensions (HxWxD):

Millimeters: 93 x 53 x 58 mm
Inches: 3.66 x 2.08 x 2.28"

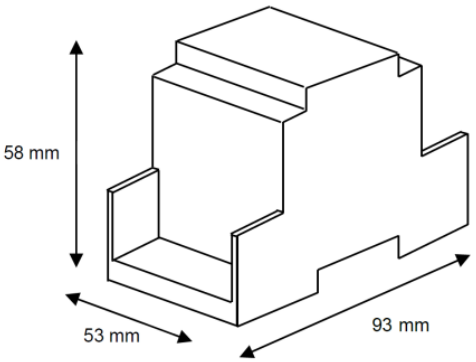

5 Error codes

Error Code	Error in Remote Controller	Error description
0	N/A	No active error
1	E0	Phase error or error in the phase sequence
2	E1	Communication error
3	E2	T1 sensor error
4	E3	T2A sensor error
5	E4	T2B sensor error
6	E5	T3 temperature and T4 temperature Compressor discharge temperature sensors error
7	E6	Zero cross error detection
8	E7	EEPROM memory error
9	E8	Indoor fan speed out of control
10	E9	Communication error between the main panel and the visualization panel
11	EA	Compressor's current overload error (4 times)
12	EB	Inverter module protection
13	EC	Cooling error
14	ED	Outdoor unit fault protection
15	EE	Water level fault detection
16	EF	Other errors
17	P0	Vaporizer temperature protection
18	P1	Thawing or cold air protection
19	P2	Condenser high temperatures protection
20	P3	Compressor temperature protection
21	P4	Evacuation duct temperature protection
22	P5	Discharge high pressure protection
23	P6	Discharge low pressure protection
24	P7	Current overload or under load protection
25	P8	Compressor's current overload protection
26	P9	Reserved
27	PA	Reserved
28	PB	Reserved
29	PC	Reserved
30	PD	Reserved
31	PE	Reserved
32	PF	Other protection measures

© HMS Industrial Networks S.L.U. - All rights reserved
This information is subject to change without notice