24ACB6
Comfort™ Series 16 2–Stage Air Conditioner with Puron® Refrigerant
2 to 5 Tons

Carrier®
Turn to the Experts.℠

Product Data

Puron™
the environmentally sound refrigerant

Comfort™ SERIES

Carrier Air Conditioners with Puron® refrigerant provide a collection of features unmatched by any other family of equipment. The 24ACB has been designed utilizing Carrier's Puron refrigerant. The environmentally sound refrigerant allows you to make a responsible decision in the protection of the earth's ozone layer.

As an Energy Star® Partner, Carrier Corporation has determined that this product meets the Energy Star® guidelines for energy efficiency. Refer to the combination ratings in the Product Data for system combinations that meet Energy Star® guidelines.

NOTE: Ratings contained in this document are subject to change at any time. Always refer to the AHRI directory (www.ahridirectory.org) for the most up-to-date ratings information.

INDUSTRY LEADING FEATURES / BENEFITS

Efficiency

- 16 SEER / 11.5 - 13.0 EER
- Microtube Technology™ refrigeration system
- Indoor air quality accessories available

Sound

- Sound level as low as 73 dBA

Comfort

- System supports Thermidistat™ or standard 2-stage thermostat controls

Reliability

- Puron® refrigerant - environmentally sound, won't deplete the ozone layer and low lifetime service cost.
- Front-seating service valves
- 2-stage scroll compressor
- Internal pressure relief valve
- Internal thermal overload
- Low pressure switch
- High pressure switch
- Filter drier
- Balanced refrigeration system for maximum reliability

Durability

WeatherArmor™ protection package:

- Solid, Durable sheet metal construction
- Steel louver coil guard
- Baked-on, complete outer coverage, powder paint

Applications

- Long-line - up to 250 feet (76.2 m) total equivalent length, up to 200 feet (60.96 m) condenser above evaporator, or up to 80 ft. (24.38 m) evaporator above condenser (See Longline Guide for more information.)

MODEL NUMBER NOMENCLATURE

1	2	3	4	5	6	7	8	9	10	11	12	13
N	N	A	A	A/N	N	N	N	A/N	A/N	A/N	N	N
2	4	A	C	B	6	3	6	A	0	0	3	0
Product Series		Product Family	Tier	Major Series	SEER	Cooling Capacity		Variations	Open	Open	Voltage	Minor Series
24=AC		A=RES AC	C=Comfort	B=Puron	6=16 SEER			A=Standard	0=Not Defined	0=Not Defined	3=208/230–1	0, 1, 2...

Puron™ the environmentally sound refrigerant

ARI PERFORMANCE CERTIFIED™ ARI Standard 210/240 Unitary Air Conditioners

ISO 9001:2000 QMI REGISTERED

c UL US

ENERGY STAR

This product has been designed and manufactured to meet Energy Star® criteria for energy efficiency when matched with appropriate coil components. However, proper refrigerant charge and proper air flow are critical to achieve rated capacity and efficiency. Installation of this product should follow all manufacturing refrigerant charging and air flow instructions. **Failure to confirm proper charge and air flow may reduce energy efficiency and shorten equipment life.**

STANDARD FEATURES

FEATURES	Unit Size – Series			
	24–30	36–30	48–30	60–30
Puron Refrigerant	X	X	X	X
Maximum SEER Rating	16.5	16.5	16.5	16.5
2–Stage Scroll Compressor	X	X	X	X
Louvered Coil Guard	X	X	X	X
Field Installed Filter Drier	X	X	X	X
Front Seating Service Valves	X	X	X	X
Internal Pressure Relief Valve	X	X	X	X
Internal Thermal Overload	X	X	X	X
Long Line capability	X	X	X	X
Low Pressure Switch	X	X	X	X
High Pressure Switch	X	X	X	X

X = Standard

REFRIGERANT PIPING LENGTH LIMITATIONS

Liquid Line Sizing and Maximum Total Equivalent Lengths† for Cooling Only Systems with Puron® Refrigerant:

The maximum allowable length of a residential split system depends on the liquid line diameter and vertical separation between indoor and outdoor units.

See Table below for liquid line sizing and maximum lengths :

Maximum Total Equivalent Length
Outdoor Unit BELOW Indoor Unit

Size	Liquid Line Connection	Liquid Line Diam. w/TXV	AC with Puron Refrigerant Maximum Total Equivalent Length†: Outdoor unit BELOW Indoor Vertical Separation ft (m)								
			0–5 (0–1.5)	6–10 (1.8–3.0)	11–20 (3.4–6.1)	21–30 (6.4–9.1)	31–40 (9.4–12.2)	41–50 (12.5–15.2)	51–60 (15.5–18.3)	61–70 (18.6–21.3)	71–80 (21.6–24.4)
024 AC with Puron	3/8	1/4	75	75	75	50	50	– –	– –	– –	– –
		5/16	250*	250*	250*	250*	250*	225*	175	125	100
		3/8	250*	250*	250*	250*	250*	250*	250*	250*	250*
036 AC with Puron	3/8	5/16	175	150	150	100	100	100	75	– –	– –
		3//8	250*	250*	250*	250*	250*	250*	250*	250*	250*
048 AC with Puron	3/8	3/8	250*	250*	250*	250*	250*	250*	230	160	– –
060 AC with Puron	3/8	3/8	250*	250*	250*	225*	190	150	110	– –	– –

*** Maximum actual length not to exceed 200 ft (61 m)**

† Total equivalent length accounts for losses due to elbows or fitting. See the Long Line Guideline for details.

– – = outside acceptable range

Maximum Total Equivalent Length
Outdoor Unit ABOVE Indoor Unit

Size	Liquid Line Connection	Liquid Line Diam. w/TXV	AC with Puron Refrigerant Maximum Total Equivalent Length†: Outdoor unit ABOVE Indoor Vertical Separation ft (m)							
			25 (7.6)	26–50 (7.9–15.2)	51–75 (15.5–22.9)	76–100 (23.2–30.5)	101–125 (30.8–38.1)	126–150 (38.4–45.7)	151–175 (46.0–53.3)	176–200 (53.6–61.0)
024 AC with Puron	3/8	1/4	100	125	175	200	225*	250*	250*	250*
		5/16	250*	250*	250*	250*	250*	250*	250*	250*
		3/8	250*	250*	250*	250*	250*	250*	250*	250*
036 AC with Puron	3/8	5/16	225*	250*	250*	250*	250*	250*	250*	250*
		3/8	250*	250*	250*	250*	250*	250*	250*	250*
048 AC with Puron	3/8	3/8	250*	250*	250*	250*	250*	250*	250*	250*
060 AC with Puron	3/8	3/8	250*	250*	250*	250*	250*	250*	250*	250*

*** Maximum actual length not to exceed 200 ft (61 m)**

† Total equivalent length accounts for losses due to elbows or fitting. See the Long Line Guideline for details.

REFRIGERANT CHARGE ADJUSTMENTS

Liquid Line Size	Puron Charge oz/ft (g/m)
3/8	0.60 (17.74) (Factory charge for lineset = 9 oz / 266.16 g)
5/16	0.40 (11.83)
1/4	0.27 (7.98)

Units are factory charged for 15 ft (4.6 m) of 3/8” liquid line. The factory charge for 3/8” lineset 9 oz.(266.16 g). When using other length or diameter liquid lines, charge adjustments are required per the chart above.

Charging Formula:

[(Lineset oz/ft x total length) – (factory charge for lineset)] = charge adjustment

Example 1: System has 15 ft of line set using existing 1/4“ liquid line. What charge adjustment is required?

Formula: (.27 oz/ft x 15ft) – (9 oz) = (-4.95) oz.

Net result is to remove 4.95 oz of refrigerant from the system

Example 2: System has 45 ft of existing 5/16” liquid line. What is the charge adjustment?

Formula: (.40 oz/ft. x 45ft) – (9 oz.) = 9 oz.

Net result is to add 9 oz of refrigerant to the system

LONG LINE APPLICATIONS

An application is considered Long Line, when the refrigerant level in the system requires the use of accessories to maintain acceptable refrigerant management for systems reliability. See Accessory Usage Guideline table for required accessories. Defining a system as long line depends on the liquid line diameter, actual length of the tubing, and vertical separation between the indoor and outdoor units.

For Air Conditioner systems, the chart below shows when an application is considered Long Line.

AC WITH PURON® REFRIGERANT LONG LINE DESCRIPTION ft (m)
Beyond these lengths, long line accessories are required

Liquid Line Size	Units On Same Level	Outdoor Below Indoor	Outdoor Above Indoor
1/4	No accessories needed within allowed lengths	No accessories needed within allowed lengths	175 (53.3)
5/16	120 (36.6)	50 (15.2) vertical or 120 (36.6) total	120 (36.6)
3/8	80 (24.4)	35 (10.7) vertical or 80 24.4) total	80 (24.4)

Note: See Long Line Guideline for details

24ACB6

VAPOR LINE SIZING AND COOLING CAPACITY LOSS

Acceptable vapor line diameters provide adequate oil return to the compressor while avoiding excessive capacity loss. The suction line diameters shown in the chart below are acceptable for AC systems with Puron refrigerant:

Vapor Line Sizing and Cooling Capacity Losses — Puron® Refrigerant 2-Stage Air Conditioner Applications

Unit Nominal Size (Btuh)	Maximum Liquid Line Diameters (In. OD)	Vapor Line Diameters (In.) OD	Cooling Capacity Loss (%) Total Equivalent Line Length ft. (m)								
			26–50 (7.9–15.2)	51–80 (15.5–24.4)	81–100 (24.7–30.5)	101–125 (30.8–38.1)	126–150 (38.4–45.7)	151–175 (46.0–50.3)	176–200 (53.6–60.0)	201–225 (61.3–68.6)	226–250 (68.9–76.2)
024 2–Stage Puron AC	3/8	5/8	0	1	1	2	3	3	4	4	5
		3/4	0	0	0	0	1	1	1	1	1
036 2–Stage Puron AC	3/8	5/8	1	2	4	5	6	7	9	10	11
		3/4	0	0	1	1	2	2	3	3	4
		7/8	0	0	0	0	1	1	1	1	2
048 2–Stage Puron AC	3/8	3/4	0	1	2	3	4	5	5	6	7
		7/8	0	0	1	1	2	2	2	3	3
060 2–Stage Puron AC	3/8	3/4	1	2	4	5	6	7	9	10	11
		7/8	0	1	2	2	3	4	4	5	5
		1–1/8	0	0	0	1	1	1	1	1	1

Applications in this area may be long line and may have height restrictions. See the *Residential Piping and Long Line Guideline*.

PHYSICAL DATA

UNIT SIZE SERIES	24–30	36–30	48–30	60–30
Operating Weight lb (kg)	204 (93)	204 (93)	306 (139)	316 (143)
Shipping Weight lb (kg)	243 (110)	243 (110)	363 (165)	373 (169)
Compressor Type	2–Stage Scroll			
REFRIGERANT	Puron® (R–410A)			
Control	TXV (Puron® Hard Shutoff)			
Charge lb (kg)	6.63 (3.01)	6.88 (3.12)	11.63 (5.27)	15.13 (6.86)
COND FAN	Propeller Type, Direct Drive			
Air Discharge	Vertical			
Air Qty (CFM)	3100	3400	4300	4450
Motor HP	1/10	1/5	1/4	1/4
Motor RPM	800	800	800	800
COND COIL				
Face Area (Sq ft)	21.56	21.56	25.15	30.18
Fins per In.	25	25	20	20
Rows	1	1	2	2
Circuits	4	4	7	8
VALVE CONNECT. (In. ID)				
Vapor	3/4	7/8	7/8	7/8
Liquid	3/8			
REFRIGERANT TUBES (In. OD)				
Rated Vapor*	3/4	7/8	1–1/8	1–1/8
Liquid	3/8			

*Units are rated with 25 ft (7.6 m) of lineset length. See *Vapor Line Sizing and Cooling Capacity Loss* table when using other sizes and lengths of lineset.

ELECTRICAL DATA

UNIT SIZE – SERIES	V/PH	OPER VOLTS*		COMPR		FAN	MCA	MIN WIRE SIZE†	MIN WIRE SIZE†	MAX LENGTH ft. (m)‡	MAX LENGTH ft. (m)‡	MAX FUSE** or CKT BRK AMPS
		MAX	MIN	RLA	LRA	FLA		60° C	75° C	60° C	75° C	
24–30	208/230	187	253	10.30	52.0	0.7	13.58	14.00	14.00	60 (18.3)	57 (17.4)	20
36–30	208/230			16.70	82.0	1.2	22.08	14.00	14.00	45 (13.7)	44 (13.4)	35
48–30	208/230			21.20	96.0	1.3	27.80	12.00	12.00	51 (15.5)	49 (14.9)	40
60–30	208/230			23.00	118.0	1.3	30.06	8.00	10.00	93 (28.3)	57 (17.4)	50

* Permissible limits of the voltage range at which the unit will operate satisfactorily

† If wire is applied at ambient greater than 30°C, consult table 310–16 of the NEC (NFPA 70). The ampacity of non–metallic–sheathed cable (NM), trade name ROMEX, shall be that of 60°C conditions, per the NEC (NFPA 70) Article 336–26. If other than uncoated (no–plated), 60 or 75°C insulation, copper wire (solid wire for 10 AWG or smaller, stranded wire for larger than 10 AWG) is used, consult applicable tables of the NEC (NFPA 70).

‡ Length shown is as measured one way along wire path between unit and service panel for voltage drop not to exceed 2%.

** Time–Delay fuse.

FLA – Full Load Amps
LRA – Locked Rotor Amps
MCA – Minimum Circuit Amps
RLA – Rated Load Amps
NOTE: Control circuit is 24–V on all units and requires external power source. Copper wire must be used from service disconnect to unit. All motors/compressors contain internal overload protection.

Complies with 2007 requirements of ASHRAE Standards 90.1

A-WEIGHTED SOUND POWER

Unit Size – Voltage, Series	Standard Rating (dBA)	TYPICAL OCTAVE BAND SPECTRUM (dBA, without tone adjustment)					
		125	250	500	1000	4000	8000
24 – 30	73 – low stage	48.9	63.4	60.3	62.5	56.5	48.4
	74 – high stage	48.9	58.4	61.3	60.5	58.5	53.4
36 – 30	74 – low stage	49.4	58.9	65.8	63.0	57.0	53.4
	74 – high stage	49.4	59.4	62.3	64.0	56.5	52.4
48 – 30	74 – low stage	52.9	59.4	61.8	63.5	56.5	49.4
	76 – high Stage	51.9	61.9	61.8	65.0	58.5	50.9
60 – 30	74 – low stage	51.4	58.4	63.3	62.5	57.0	50.9
	74 – high stage	52.4	62.4	62.3	65.5	58.0	51.9

NOTE: Tested in accordance with AHRI Standard 270–08. (Not listed with AHRI).

CHARGING SUBCOOLING (TXV-TYPE EXPANSION DEVICE)

UNIT SIZE–VOLTAGE, SERIES	REQUIRED SUBCOOLING °F (°C)
24–30	10 (5.6)
36–30	10 (5.6)
48–30	10 (5.6)
60–30	10 (5.6)

THERMOSTATS

THERMOSTAT / SUBBASE PKG.	DESCRIPTION
TP–PRH01–A	Programmable Thermidistat
TP–NRH01–A	Non–programmable Thermidistat
TP–PHP01*	Performance Series Programmable HP Stat
TP–NHP01*	Performance Series Non–programmable HP Stat
TC–PHP01*	Comfort Series Programmable HP Stat
TC–NHP01*	Comfort Series Non–programmable HP Stat

*Serial numbers beginning with 2909 and thereafter.

ACCESSORIES

ORDER NUMBER	DESCRIPTION	24–30	36–30	48–30	60–30
KAACH1601AAA	CRANKCASE HTR	X	X		
Stanadard	CRANKCASE HTR			X	X
KSATX0201PUR	TXV PURON HSO	X			
KSATX0301PUR	TXV PURON HSO		X		
KSATX0401PUR	TXV PURON HSO			X	
KSATX0501PUR	TXV PURON HSO				X
KSASF0101AAA	SUPPORT FEET	X	X	X	X

x = Accessory

ACCESSORY USAGE GUIDELINE

ACCESSORY	REQUIRED FOR LONG LINE APPLICATIONS*	REQUIRED FOR SEA COAST APPLICATIONS (Within 2 miles/3.22 km)
Compressor Start Assist Capacitor and Relay	Yes	No
Crankcase Heater	Yes	No
Hard Shut–Off TXV	Yes	Yes
Support Feet	No	Recommended

* For tubing line sets between 80 and 200 ft. (24.38 and 60.96 m) and/or 35 ft. (10.7 m) vertical differential, refer to Residential Split–System Longline Application Guideline.

Accessory Description and Usage (Listed Alphabetically)

1. Compressor Start Assist - Capacitor and Relay

Start capacitor and relay gives a ”hard” boost to compressor motor at each start up.

Usage Guideline:

Required for reciprocating compressors in the following applications:

Long line

Hard shut off expansion valve on indoor coil

Liquid line solenoid on indoor coil

Required for single-phase scroll compressors in the following applications:

Long line

Suggested for all compressors in areas with a history of low voltage problems.

2. Crankcase Heater

An electric resistance heater which mounts to the base of the compressor to keep the lubricant warm during off cycles. Improves compressor lubrication on restart and minimizes the chance of liquid slugging.

Usage Guideline:

Required in low ambient cooling applications.

Required in long line applications.

Suggested in all commercial applications.

3. Outdoor Air Temperature Sensor

Designed for use with Carrier Thermostats listed in this publication. This device enables the thermostat to display the outdoor temperature. This device also

is required to enable special thermostat features such as auxiliary heat lock out.

Usage Guideline:

Suggested for all Carrier thermostats listed in this publication.

4. Support Feet

Four stick-on plastic feet that raise the unit 4 in. (101.6 mm) above the mounting pad. This allows sand, dirt, and other debris to be flushed from the unit base, minimizing corrosion.

Usage Guideline:

Suggested in the following applications:

Coastal installations.

Windy areas or where debris is normally circulating.

Rooftop installations.

For improved sound ratings.

5. Thermostatic Expansion Valve (TXV)

A modulating flow-control valve which meters refrigerant liquid flow rate into the evaporator in response to the superheat of the refrigerant gas leaving the evaporator.

Kit includes valve, adapter tubes, and external equalizer tube. Hard shut off types are available.

NOTE: When using a hard shut off TXV with single phase reciprocating compressors, a Compressor Start Assist Capacitor and Relay is required.

Usage Guideline:

Required to achieve AHRI ratings in certain equipment combinations. Refer to combination ratings.

Hard shut off TXV or LLS required in air conditioner long line applications.

Required for use on all zoning systems.

DIMENSIONS - ENGLISH

UNIT	SERIES	ELECTRICAL CHARACTERISTICS				A	B	C	D	E	F	G	K	L	M	N	P	OPERATING WEIGHT (lbs)	SHIPPING WEIGHT (lbs)	SHIPPING DIMENSIONS (L x W x H)
24ACB624	0	X	O	O	O	31 3/16"	39 1/8"	3 7/8"	3/4"	6 9/16"	24 11/16"	9 1/8"	2 15/16"	5/8"	14 1/4"	17 1/4"	19 1/4"	204	243	32 3/8" X 35 1/2" X 42 3/4"
24ACB636	0	X	O	O	O	31 3/16"	39 1/8"	3 7/8"	7/8"	6 9/16"	24 11/16"	9 1/8"	2 15/16"	5/8"	14 1/4"	17 1/4"	19 1/4"	204	243	32 3/8" X 35 1/2" X 42 3/4"
24ACB648	0	X	O	O	O	35"	39 1/8"	3 7/8"	7/8"	6 9/16"	28 7/16"	9 1/8"	2 15/16"	5/8"	18"	17 1/2"	19 1/2"	306	363	36 1/8" X 39 5/16" X 42 3/4"
24ACB660	0	X	O	O	O	35"	45 7/8"	3 7/8"	7/8"	6 9/16"	28 7/16"	9 1/8"	2 15/16"	5/8"	17 7/8"	18 5/8"	20 1/4"	316	373	36 1/8" X 39 5/16" X 46 3/16"

208-230-1-60	230-1-60	208/230-3-60	460-3-60

X = YES
O = NO

NOTES:

1. ALLOW 30" CLEARANCE TO SERVICE SIDE OF UNIT, 48" ABOVE UNIT, 6" ON ONE SIDE, 12" ON REMAINING SIDE, AND 24" BETWEEN UNITS FOR PROPER AIRFLOW.
2. MINIMUM OUTDOOR OPERATING AMBIENT IN COOLING MODE IS 55°F, MAX. 125°F.
3. SERIES DESIGNATION IS THE 13TH POSITION OF THE UNIT MODEL NUMBER.
4. CENTER OF GRAVITY ⊕.
5. ALL DIMENSIONS ARE IN "INCHES" UNLESS NOTED.

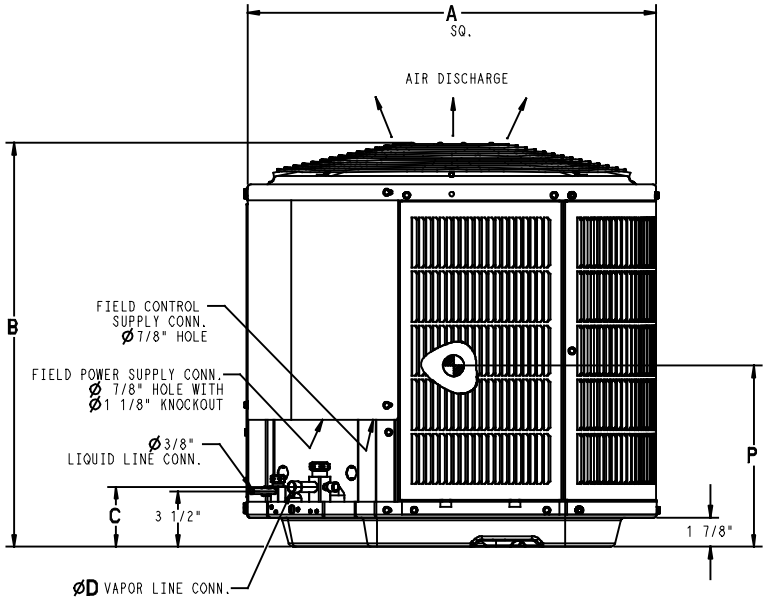

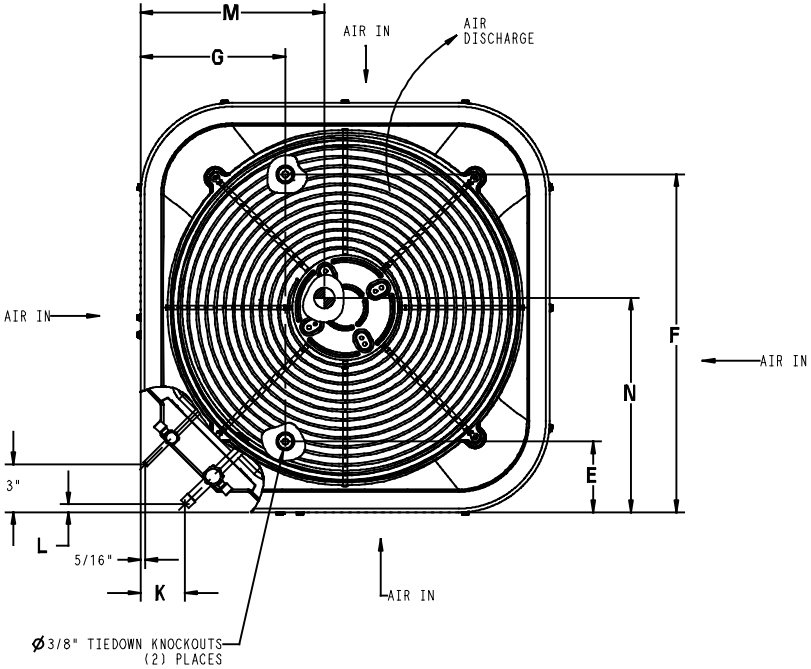

UNIT SIZE	MINIMUM MOUNTING PAD DIMENSIONS
24, 36	31 1/2" X 31 1/2"
48, 60	35" X 35"

DIMENSIONS - SI

UNIT	SERIES	ELECTRICAL CHARACTERISTICS				A	B	C	D	E	F	G	K	L	M	N	P	OPERATING WEIGHT (Kgs)	SHIPPING WEIGHT (Kgs)	SHIPPING DIMENSIONS (L x W x H)
24ACB624	0	X	O	O	O	792.2	993.8	98.4	19.1	166.7	627.1	231.8	74.6	15.9	362.0	438.2	489.0	93	110	822.3 X 901.7 X 1085.9
24ACB636	0	X	O	O	O	792.2	993.8	98.4	22.2	166.7	627.1	231.8	74.6	15.9	362.0	438.2	489.0	93	110	822.3 X 901.7 X 1085.9
24ACB648	0	X	O	O	O	889.0	993.8	98.4	22.2	166.7	722.3	231.8	74.6	15.9	457.2	444.5	495.3	139	165	917.6 X 998.5 X 1085.9
24ACB660	0	X	O	O	O	889.0	1165.2	98.4	22.2	166.7	722.3	231.8	74.6	15.9	454.0	473.1	514.4	143	169	917.6 X 998.5 X 1173.2
		208-230-1-60	230-1-60	208/230-3-60	460-3-60															

X = YES
O = NO

NOTES:

1. ALLOW 762.0 CLEARANCE TO SERVICE SIDE OF UNIT, 1219.2 ABOVE UNIT, 152.4 ON ONE SIDE, 304.8 ON REMAINING SIDE, AND 609.6 BETWEEN UNITS FOR PROPER AIRFLOW.
2. MINIMUM OUTDOOR OPERATING AMBIENT IN COOLING MODE IS 13°C, MAX. 52°C.
3. SERIES DESIGNATION IS THE 13TH POSITION OF THE UNIT MODEL NUMBER.
4. CENTER OF GRAVITY ⊕.
5. ALL DIMENSIONS ARE IN "MM" UNLESS NOTED.

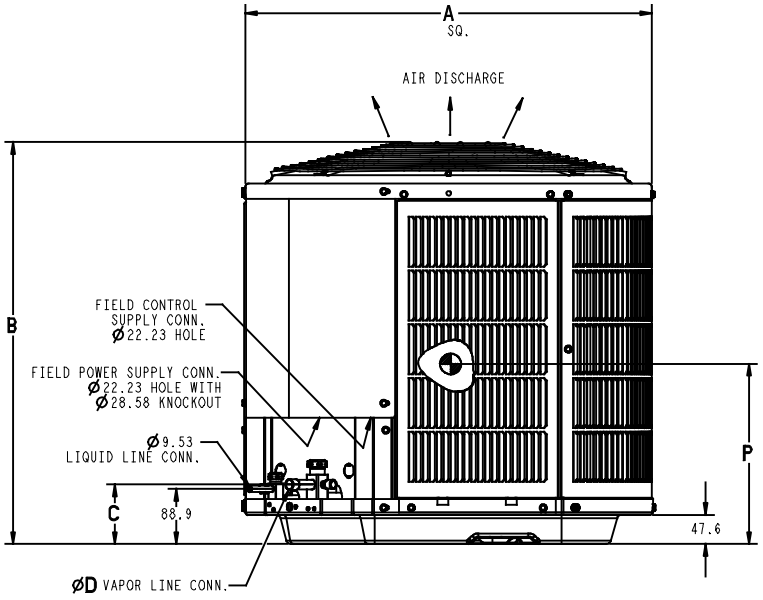

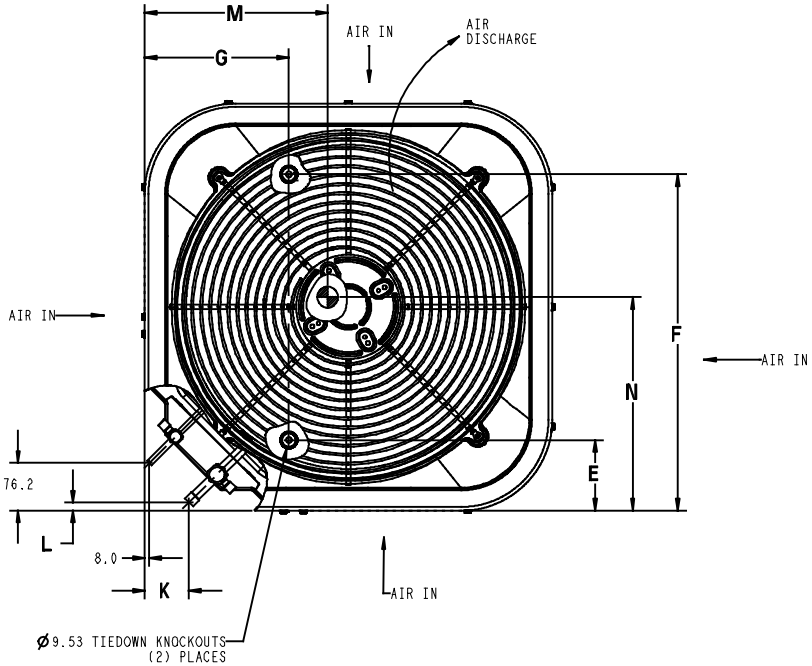

UNIT SIZE	MINIMUM MOUNTING PAD DIMENSIONS
24,36	800.1 X 800.1
48,60	889.0 X 889.0

CLEARANCES

Clearances (various examples)

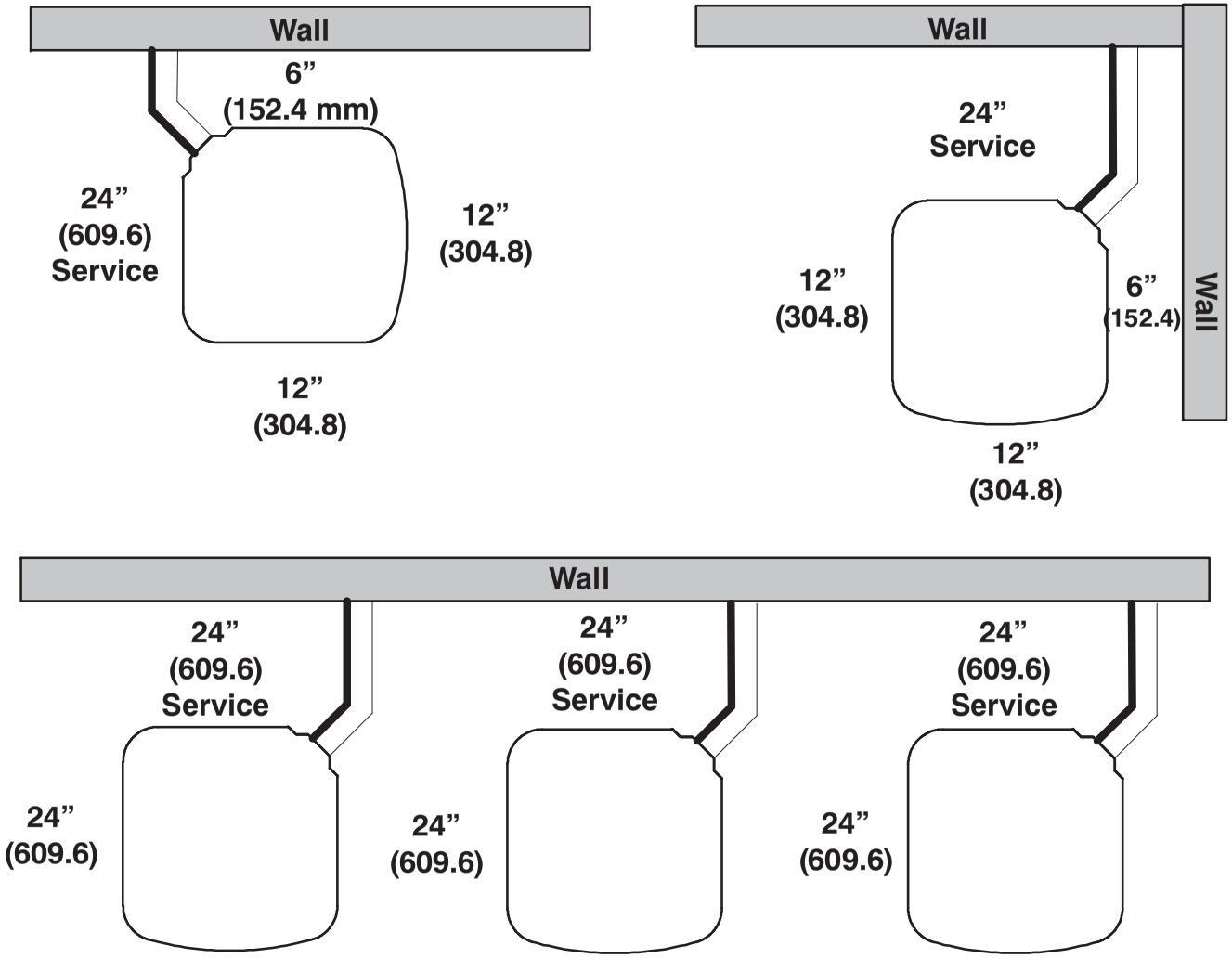

Note: Numbers in ( ) = mm

IMPORTANT: When installing multiple units in an alcove, roof well, or partially enclosed area, ensure there is adequate ventilation to prevent re-circulation of discharge air.

A07833

COMBINATION RATINGS

UNIT SIZE – VOLTAGE, SERIES	INDOOR MODEL	AHRI STANDARD RATINGS COOLING CAPACITY HIGH	CAPACITY LOW	SEER	EER	ID CFM HIGH	ID CFM LOW	FURNACE MODEL
24ACB624A–30	*CNPV*4217A**	25,200	21,000	16.0	13.2	715	585	58PH*045–08
	CAP**2414A**	24,200	20,000	14.0	11.8	700	560	
	CAP**2417A**	24,600	20,000	16.0	13.2	700	525	58CV(A,X)090–16
	CAP**2417A**	25,200	21,200	16.5	13.3	765	655	58MEB040–12
	CAP**2417A**	25,200	21,000	16.5	13.3	780	625	58MEB060–12
	CAP**2417A**	24,800	20,000	16.0	13.2	700	525	58MV(B,C)060–14
	CAP**2417A**	24,200	20,000	14.0	11.8	700	560	
	CAP**3014A**	24,600	19,900	16.0	13.1	700	525	58CV(A,X)070–12
	CAP**3014A**	25,200	21,200	16.5	13.4	760	650	58MEB040–12
	CAP**3014A**	25,200	20,800	16.5	13.3	770	615	58MEB060–12
	CAP**3014A**	25,000	20,600	16.0	13.0	720	585	58PH*045–08
	CAP**3014A**	24,400	20,000	14.0	11.9	700	560	
	CAP**3017A**	24,800	20,000	16.0	13.3	700	525	58CV(A,X)090–16
	CAP**3017A**	25,400	21,200	16.5	13.5	785	680	58MEB040–12
	CAP**3017A**	25,400	21,200	16.5	13.4	795	650	58MEB060–12
	CAP**3017A**	25,000	20,000	16.0	13.3	700	525	58MV(B,C)060–14
	CAP**3017A**	24,400	20,000	14.0	11.9	700	560	
	CAP**3614A**	24,800	20,000	16.0	13.1	700	525	58CV(A,X)070–12
	CAP**3614A**	25,400	21,200	16.5	13.4	765	660	58MEB040–12
	CAP**3614A**	25,400	21,000	16.5	13.4	780	630	58MEB060–12
	CAP**3614A**	25,000	20,800	16.0	13.1	725	590	58PH*045–08
	CAP**3614A**	24,400	20,200	14.0	11.9	700	560	
	CAP**3617A**	24,800	20,200	16.0	13.3	700	525	58CV(A,X)090–16
	CAP**3617A**	25,400	21,400	16.5	13.5	790	695	58MEB040–12
	CAP**3617A**	25,600	21,200	16.5	13.5	805	660	58MEB060–12
	CAP**3617A**	25,200	20,000	16.0	13.3	700	525	58MV(B,C)060–14
	CAP**3617A**	24,400	20,200	14.0	11.9	700	560	
	CAP**3621A**	25,600	21,400	16.5	13.6	820	695	58MEB060–12
	CAP**3621A**	24,800	20,000	16.0	13.3	700	525	58MV(B,C)080–14
	CAP**3621A**	24,400	20,200	14.0	11.9	700	560	
	CNPH*2417A**	24,600	20,200	16.0	13.1	700	525	58CV(A,X)090–16
	CNPH*2417A**	25,000	21,000	16.5	13.2	725	610	58MEB040–12
	CNPH*2417A**	25,000	20,800	16.5	13.2	735	575	58MEB060–12
	CNPH*2417A**	24,800	20,000	16.0	13.0	700	525	58MV(B,C)060–14
	CNPH*2417A**	24,600	20,000	16.0	13.0	700	525	58MV(B,C)080–14
	CNPH*2417A**	24,600	20,000	16.0	12.9	700	525	58MVB040–14
	CNPH*2417A**	24,600	20,600	16.0	12.9	695	565	58PH*045–08
	CNPH*2417A**	24,200	20,200	14.0	11.8	700	560	
	CNPH*3017A**	24,600	20,000	16.0	13.1	700	525	58CV(A,X)070–12
	CNPH*3017A**	24,800	20,000	16.0	13.3	700	525	58CV(A,X)090–16
	CNPH*3017A**	25,000	20,600	16.0	12.9	750	585	58HDV040––12
	CNPH*3017A**	25,200	21,000	16.0	12.9	805	630	58HDV060––12
	CNPH*3017A**	25,400	21,200	16.5	13.4	775	675	58MEB040–12
	CNPH*3017A**	25,400	21,200	16.5	13.4	790	645	58MEB060–12
	CNPH*3017A**	25,000	20,000	16.0	13.3	700	525	58MV(B,C)060–14
	CNPH*3017A**	24,600	19,900	16.0	13.2	700	525	58MV(B,C)080–14
	CNPH*3017A**	24,800	20,000	16.0	13.1	700	525	58MVB040–14
	CNPH*3017A**	25,000	20,800	16.0	13.1	730	595	58PH*045–08
	CNPH*3017A**	24,400	20,000	14.0	11.9	700	560	
	CNPH*3617A**	24,600	20,000	16.0	13.1	700	525	58CV(A,X)070–12
	CNPH*3617A**	24,800	20,000	16.0	13.3	700	525	58CV(A,X)090–16
	CNPH*3617A**	25,000	20,800	16.0	12.9	750	590	58HDV040––12
	CNPH*3617A**	25,200	21,000	16.0	12.9	805	630	58HDV060––12
	CNPH*3617A**	25,200	21,200	16.5	13.4	790	645	58MEB060–12
	CNPH*3617A**	25,000	20,000	16.0	13.3	700	525	58MV(B,C)060–14
	CNPH*3617A**	24,600	19,900	16.0	13.2	700	525	58MV(B,C)080–14
	CNPH*3617A**	24,800	20,000	16.0	13.1	700	525	58MVB040–14
	CNPH*3617A**	25,000	20,800	16.0	13.1	730	595	58PH*045–08
	CNPH*3617A**	24,400	20,000	14.0	11.9	700	560	
	CNPV*2414A**	24,400	20,000	16.0	12.9	700	525	58CV(A,X)070–12
	CNPV*2414A**	25,000	21,000	16.5	13.2	725	610	58MEB040–12
	CNPV*2414A**	25,000	20,800	16.5	13.2	735	575	58MEB060–12
	CNPV*2414A**	24,600	20,600	16.0	12.9	695	565	58PH*045–08
	CNPV*2414A**	24,200	20,200	14.0	11.8	700	560	
	CNPV*2417A**	24,600	20,200	16.0	13.1	700	525	58CV(A,X)090–16

See notes on page 17

COMBINATION RATINGS CONTINUED

UNIT SIZE – VOLTAGE, SERIES	INDOOR MODEL	AHRI STANDARD RATINGS COOLING CAPACITY HIGH	CAPACITY LOW	SEER	EER	ID CFM HIGH	ID CFM LOW	FURNACE MODEL
24ACB624A–30	CNPV*2417A**	25,000	21,000	16.5	13.2	725	610	58MEB040–12
	CNPV*2417A**	25,000	20,800	16.5	13.1	735	575	58MEB060–12
	CNPV*2417A**	24,800	20,000	16.0	13.0	700	525	58MV(B,C)060–14
	CNPV*2417A**	24,200	20,200	14.0	11.8	700	560	
	CNPV*3014A**	24,600	20,000	16.0	13.0	700	525	58CV(A,X)070–12
	CNPV*3014A**	25,200	21,000	16.5	13.3	740	630	58MEB040–12
	CNPV*3014A**	25,200	20,800	16.5	13.3	750	605	58MEB060–12
	CNPV*3014A**	24,800	20,600	16.0	13.0	705	580	58PH*045–08
	CNPV*3014A**	24,400	20,000	14.0	11.9	700	560	
	CNPV*3017A**	24,800	20,000	16.0	13.3	700	525	58CV(A,X)090–16
	CNPV*3017A**	25,400	21,200	16.5	13.4	790	645	58MEB060–12
	CNPV*3017A**	25,000	20,000	16.0	13.3	700	525	58MV(B,C)060–14
	CNPV*3017A**	24,400	20,000	14.0	11.9	700	560	
	CNPV*3117A**	25,200	20,400	16.5	13.5	700	525	58CV(A,X)090–16
	CNPV*3117A**	25,600	21,600	16.5	13.7	800	655	58MEB060–12
	CNPV*3117A**	25,600	20,400	16.5	13.5	700	525	58MV(B,C)060–14
	CNPV*3117A**	24,800	20,600	14.5	12.1	700	560	
	CNPV*3617A**	24,800	20,000	16.0	13.3	700	525	58CV(A,X)090–16
	CNPV*3617A**	25,000	20,000	16.0	13.3	700	525	58MV(B,C)060–14
	CNPV*3617A**	24,400	20,000	14.0	11.9	700	560	
	CNPV*3621A**	25,400	21,400	16.5	13.5	780	680	58MEB040–12
	CNPV*3621A**	25,400	21,200	16.5	13.4	790	650	58MEB060–12
	CNPV*3717A**	25,400	20,600	16.5	13.6	700	525	58CV(A,X)090–16
	CNPV*3717A**	26,200	22,000	16.5	13.9	810	680	58MEB060–12
	CNPV*3717A**	25,800	20,600	16.5	13.7	700	525	58MV(B,C)060–14
	CNPV*3717A**	25,200	20,800	14.5	12.2	700	560	
	CSPH*2412A**	24,800	20,200	16.0	13.0	700	525	58CV(A,X)070–12
	CSPH*2412A**	24,800	20,200	16.0	13.2	700	525	58CV(A,X)090–16
	CSPH*2412A**	24,800	20,600	16.0	12.7	705	540	58HDV040––12
	CSPH*2412A**	25,000	20,800	16.0	12.8	735	565	58HDV060––12
	CSPH*2412A**	25,200	21,000	16.5	13.3	710	585	58MEB040–12
	CSPH*2412A**	25,200	20,600	16.5	13.2	725	545	58MEB060–12
	CSPH*2412A**	25,200	20,200	16.0	13.1	700	525	58MV(B,C)060–14
	CSPH*2412A**	24,800	20,200	16.0	13.0	700	525	58MVB040–14
	CSPH*2412A**	24,800	20,600	16.0	13.0	685	555	58PH*045–08
	CSPH*2412A**	24,600	20,400	14.5	12.0	700	560	
	CSPH*3012A**	24,800	20,000	16.0	13.1	700	525	58CV(A,X)070–12
	CSPH*3012A**	24,800	20,200	16.0	13.3	700	525	58CV(A,X)090–16
	CSPH*3012A**	25,000	20,600	16.0	12.8	735	570	58HDV040––12
	CSPH*3012A**	25,200	20,800	16.0	12.9	780	605	58HDV060––12
	CSPH*3012A**	25,400	21,200	16.5	13.4	750	640	58MEB040–12
	CSPH*3012A**	25,400	21,000	16.5	13.4	765	605	58MEB060–12
	CSPH*3012A**	25,200	20,200	16.0	13.2	700	525	58MV(B,C)060–14
	CSPH*3012A**	24,800	20,200	16.0	13.1	700	525	58MVB040–14
	CSPH*3012A**	25,000	20,800	16.0	13.1	715	580	58PH*045–08
	CSPH*3012A**	24,600	20,200	14.0	11.9	700	560	
	CSPH*3612A**	25,000	20,400	16.0	13.3	700	525	58CV(A,X)070–12
	CSPH*3612A**	25,200	20,400	16.5	13.5	700	525	58CV(A,X)090–16
	CSPH*3612A**	25,600	21,000	16.5	13.1	755	585	58HDV040––12
	CSPH*3612A**	25,800	21,400	16.5	13.2	815	630	58HDV060––12
	CSPH*3612A**	25,800	21,800	16.5	13.7	780	675	58MEB040–12
	CSPH*3612A**	26,000	21,600	16.5	13.7	795	640	58MEB060–12
	CSPH*3612A**	25,600	20,400	16.5	13.5	700	525	58MV(B,C)060–14
	CSPH*3612A**	25,200	20,400	16.5	13.3	700	525	58MVB040–14
	CSPH*3612A**	25,400	21,200	16.5	13.3	735	590	58PH*045–08
	CSPH*3612A**	24,800	20,400	14.5	12.1	700	560	
	FV4CN(B,F)003	25,000	20,800	16.5	13.5	700	560	
	FV4CNF002	25,000	20,800	16.5	13.3	700	560	
24ACB636A–30	*CNPV*4821A**	37,200	30,400	16.5	13.2	1090	960	58PH*090–16
	CAP**3614A**	35,600	29,000	16.0	12.4	1050	875	58CV(A,X)070–12
	CAP**3614A**	35,400	28,600	14.5	11.8	1050	840	
	CAP**3617A**	35,800	29,200	16.5	12.8	1050	875	58CV(A,X)090–16
	CAP**3617A**	36,000	29,600	16.5	12.7	1080	955	58MEB060–12
	CAP**3617A**	36,000	29,600	16.5	12.7	1055	925	58MEB080–12

See notes on page 17

COMBINATION RATINGS CONTINUED

UNIT SIZE – VOLTAGE, SERIES	INDOOR MODEL	AHRI STANDARD RATINGS COOLING CAPACITY HIGH	CAPACITY LOW	SEER	EER	ID CFM HIGH	ID CFM LOW	FURNACE MODEL
24ACB636A–30	CAP**3617A**	36,000	29,800	16.0	12.7	1080	985	58MEB080–16
	CAP**3617A**	36,000	29,400	16.5	12.7	1050	875	58MV(B,C)060–14
	CAP**3617A**	35,400	28,600	14.5	11.8	1050	840	
	CAP**3621A**	36,000	29,200	16.5	12.8	1050	875	58CV(A,X)110–20
	CAP**3621A**	35,800	29,200	16.5	12.7	1050	875	58MV(B,C)080–20
	CAP**3621A**	36,000	29,000	16.5	12.8	1050	875	58MV(B,C)100–20
	CAP**3621A**	36,200	29,600	16.5	12.9	1085	955	58PH*090–16
	CAP**3621A**	35,400	28,600	14.5	11.8	1050	840	
	CAP**4221A**	36,200	29,400	16.5	12.9	1050	875	58CV(A,X)110–20
	CAP**4221A**	36,000	29,400	16.5	12.8	1050	875	58MV(B,C)080–20
	CAP**4221A**	36,200	29,000	16.5	12.8	1050	875	58MV(B,C)100–20
	CAP**4221A**	36,400	29,800	16.5	13.0	1085	950	58PH*090–16
	CAP**4221A**	35,600	28,800	14.5	11.9	1050	840	
	CAP**4224A**	36,200	29,400	16.5	13.0	1050	875	58CV(A,X)135–22
	CAP**4224A**	36,200	29,400	16.5	13.2	1050	875	58CV(A,X)155–22
	CAP**4224A**	36,600	29,800	16.5	12.8	1140	900	58HDV100––20
	CAP**4224A**	36,200	29,400	16.5	13.0	1050	875	58MV(B,C)120–20
	CAP**4224A**	35,600	28,800	14.5	11.9	1050	840	
	CAP**4817A**	37,000	29,800	16.5	13.1	1050	875	58CV(A,X)090–16
	CAP**4817A**	37,400	30,600	16.5	13.0	1085	960	58MEB060–12
	CAP**4817A**	37,200	30,400	16.5	13.1	1060	925	58MEB080–12
	CAP**4817A**	37,400	30,600	16.5	13.0	1085	990	58MEB080–16
	CAP**4817A**	37,200	30,000	16.5	13.0	1050	875	58MV(B,C)060–14
	CAP**4817A**	36,600	29,400	15.0	12.1	1050	840	
	CAP**4821A**	36,800	29,800	16.5	13.0	1050	875	58CV(A,X)110–20
	CAP**4821A**	36,600	29,600	16.5	12.8	1050	875	58MV(B,C)080–14
	CAP**4821A**	36,600	29,600	16.5	12.9	1050	875	58MV(B,C)080–20
	CAP**4821A**	36,800	29,400	16.5	13.0	1050	875	58MV(B,C)100–20
	CAP**4821A**	36,200	29,200	14.5	12.0	1050	840	
	CAP**4824A**	36,800	29,800	16.5	13.2	1050	875	58CV(A,X)135–22
	CAP**4824A**	36,800	29,800	16.5	13.3	1050	875	58CV(A,X)155–22
	CAP**4824A**	36,800	29,800	16.5	13.1	1050	875	58MV(B,C)120–20
	CAP**4824A**	36,200	29,200	14.5	12.0	1050	840	
	CNPH*3617A**	35,600	29,000	16.5	12.7	1050	875	58CV(A,X)090–16
	CNPH*3617A**	35,800	29,200	16.5	12.8	1050	875	58CV(A,X)155–22
	CNPH*3617A**	36,200	29,400	16.0	12.4	1155	900	58HDV080––20
	CNPH*3617A**	36,000	29,200	16.0	12.6	1075	850	58HDV100––20
	CNPH*3617A**	35,800	29,600	16.0	12.6	1055	935	58MEB060–12
	CNPH*3617A**	35,800	29,400	16.0	12.7	1035	905	58MEB080–12
	CNPH*3617A**	35,800	29,600	16.0	12.6	1055	965	58MEB080–16
	CNPH*3617A**	35,800	29,200	16.0	12.6	1050	875	58MV(B,C)060–14
	CNPH*3617A**	35,600	29,000	16.0	12.4	1050	875	58MV(B,C)080–14
	CNPH*3617A**	35,600	29,000	16.0	12.5	1050	875	58MV(B,C)080–20
	CNPH*3617A**	35,800	28,800	16.0	12.6	1050	875	58MV(B,C)100–20
	CNPH*3617A**	35,800	29,200	16.5	12.7	1050	875	58MV(B,C)120–20
	CNPH*3617A**	35,800	29,400	16.0	12.7	1035	905	58PH*090–16
	CNPH*3617A**	35,400	28,600	14.5	11.8	1050	840	
	CNPH*4221A**	36,000	29,400	16.0	12.6	1050	875	58CV(A,X)070–12
	CNPH*4221A**	36,200	29,400	16.5	12.9	1050	875	58CV(A,X)090–16
	CNPH*4221A**	36,200	29,400	16.5	12.9	1050	875	58CV(A,X)110–20
	CNPH*4221A**	36,200	29,400	16.5	12.9	1050	875	58CV(A,X)135–22
	CNPH*4221A**	36,200	29,400	16.5	13.0	1050	875	58CV(A,X)155–22
	CNPH*4221A**	36,800	29,800	16.5	12.6	1180	915	58HDV080––20
	CNPH*4221A**	36,400	30,000	16.5	12.8	1080	950	58MEB060–12
	CNPH*4221A**	36,400	29,800	16.5	12.8	1055	920	58MEB080–12
	CNPH*4221A**	36,400	30,000	16.5	12.8	1075	980	58MEB080–16
	CNPH*4221A**	36,400	29,600	16.5	12.8	1050	875	58MV(B,C)060–14
	CNPH*4221A**	36,200	29,200	16.5	12.6	1050	875	58MV(B,C)080–14
	CNPH*4221A**	36,000	29,400	16.5	12.7	1050	875	58MV(B,C)080–20
	CNPH*4221A**	36,200	29,000	16.5	12.8	1050	875	58MV(B,C)100–20
	CNPH*4221A**	36,400	29,800	16.5	12.9	1055	925	58PH*090–16
	CNPH*4221A**	35,800	28,800	14.5	11.9	1050	840	
	CNPH*4821A**	36,800	29,800	16.5	13.1	1050	875	58CV(A,X)090–16
	CNPH*4821A**	36,800	29,800	16.5	13.1	1050	875	58CV(A,X)110–20
	CNPH*4821A**	36,800	29,800	16.5	13.2	1050	875	58CV(A,X)135–22
	CNPH*4821A**	37,000	30,000	16.5	13.4	1050	875	58CV(A,X)155–22
	CNPH*4821A**	37,600	30,400	16.5	12.9	1220	950	58HDV080––20

See notes on page 17

COMBINATION RATINGS CONTINUED

UNIT SIZE – VOLTAGE, SERIES	INDOOR MODEL	AHRI STANDARD RATINGS COOLING CAPACITY HIGH	CAPACITY LOW	SEER	EER	ID CFM HIGH	ID CFM LOW	FURNACE MODEL
24ACB636A–30	CNPH*4821A**	37,400	30,200	16.5	13.0	1140	905	58HDV100––20
	CNPH*4821A**	37,200	30,600	16.5	13.1	1115	985	58MEB060–12
	CNPH*4821A**	37,200	30,400	16.5	13.1	1085	945	58MEB080–12
	CNPH*4821A**	37,200	30,600	16.5	13.1	1110	1010	58MEB080–16
	CNPH*4821A**	36,800	29,800	16.5	13.0	1050	875	58MV(B,C)080–20
	CNPH*4821A**	36,800	29,600	16.5	13.0	1050	875	58MV(B,C)100–20
	CNPH*4821A**	36,800	29,800	16.5	13.1	1050	875	58MV(B,C)120–20
	CNPH*4821A**	36,600	29,800	16.5	12.8	1050	875	58MVB040–14
	CNPH*4821A**	36,400	29,200	14.5	12.1	1050	840	
	CNPV*3617A**	35,600	29,000	16.5	12.7	1050	875	58CV(A,X)090–16
	CNPV*3617A**	35,800	29,600	16.0	12.6	1055	935	58MEB060–12
	CNPV*3617A**	35,800	29,400	16.0	12.7	1035	905	58MEB080–12
	CNPV*3617A**	35,800	29,600	16.0	12.6	1055	965	58MEB080–16
	CNPV*3617A**	35,800	29,200	16.0	12.6	1050	875	58MV(B,C)060–14
	CNPV*3617A**	35,400	28,600	14.5	11.8	1050	840	
	CNPV*3621A**	35,800	29,200	16.0	12.7	1050	875	58CV(A,X)110–20
	CNPV*3621A**	35,600	29,000	16.0	12.4	1050	875	58MV(B,C)080–14
	CNPV*3621A**	35,600	29,000	16.0	12.5	1050	875	58MV(B,C)080–20
	CNPV*3621A**	35,800	28,800	16.0	12.6	1050	875	58MV(B,C)100–20
	CNPV*3621A**	36,000	29,400	16.0	12.8	1045	910	58PH*090–16
	CNPV*3621A**	35,400	28,600	14.5	11.8	1050	840	
	CNPV*3717A**	37,200	30,200	16.5	13.2	1050	875	58CV(A,X)090–16
	CNPV*3717A**	37,600	30,800	16.5	13.1	1090	965	58MEB060–12
	CNPV*3717A**	37,400	30,600	16.5	13.2	1060	930	58MEB080–12
	CNPV*3717A**	37,600	30,800	16.5	13.1	1085	990	58MEB080–16
	CNPV*3717A**	37,400	30,400	16.5	13.1	1050	875	58MV(B,C)060–14
	CNPV*3717A**	36,800	29,600	15.0	12.2	1050	840	
	CNPV*4217A**	36,400	29,600	16.5	12.9	1050	875	58CV(A,X)090–16
	CNPV*4217A**	36,800	30,200	16.5	12.9	1075	950	58MEB060–12
	CNPV*4217A**	36,600	30,000	16.5	12.9	1050	920	58MEB080–12
	CNPV*4217A**	36,800	30,200	16.5	12.9	1075	980	58MEB080–16
	CNPV*4217A**	36,600	29,800	16.5	12.8	1050	875	58MV(B,C)060–14
	CNPV*4217A**	36,000	29,000	14.5	12.0	1050	840	
	CNPV*4221A**	36,200	29,200	16.5	12.6	1050	875	58MV(B,C)080–14
	CNPV*4221A**	36,000	29,400	16.5	12.7	1050	875	58MV(B,C)080–20
	CNPV*4221A**	36,200	29,000	16.5	12.8	1050	875	58MV(B,C)100–20
	CNPV*4221A**	35,800	28,800	14.5	11.9	1050	840	
	CNPV*4321A**	37,400	30,200	16.5	13.2	1050	875	58CV(A,X)110–20
	CNPV*4321A**	37,200	30,000	16.5	13.0	1050	875	58MV(B,C)080–14
	CNPV*4321A**	37,200	30,200	16.5	13.1	1050	875	58MV(B,C)080–20
	CNPV*4321A**	37,400	29,800	16.5	13.2	1050	875	58MV(B,C)100–20
	CNPV*4321A**	36,800	29,600	15.0	12.2	1050	840	
	CNPV*4821A**	36,800	29,800	16.5	13.1	1050	875	58CV(A,X)090–16
	CNPV*4821A**	36,800	29,800	16.5	13.1	1050	875	58CV(A,X)110–20
	CNPV*4821A**	37,200	29,800	16.5	13.1	1115	835	58MEB060–12
	CNPV*4821A**	37,000	30,600	16.5	13.0	1090	995	58MEB080–16
	CNPV*4821A**	36,800	29,600	16.5	12.9	1050	875	58MV(B,C)080–14
	CNPV*4821A**	36,800	29,800	16.5	13.0	1050	875	58MV(B,C)080–20
	CNPV*4821A**	36,800	29,600	16.5	13.0	1050	875	58MV(B,C)100–20
	CNPV*4821A**	36,400	29,200	14.5	12.1	1050	840	
	CNPV*4824A**	36,800	29,800	16.5	13.2	1050	875	58CV(A,X)135–22
	CNPV*4824A**	37,000	30,000	16.5	13.4	1050	875	58CV(A,X)155–22
	CNPV*4824A**	36,800	29,600	16.5	12.9	1050	875	58MV(B,C)080–14
	CNPV*4824A**	36,600	29,800	16.5	13.0	1050	875	58MV(B,C)080–20
	CNPV*4824A**	36,800	29,600	16.5	13.1	1050	875	58MV(B,C)100–20
	CNPV*4824A**	36,800	29,800	16.5	13.1	1050	875	58MV(B,C)120–20
	CNPV*4824A**	36,400	29,200	14.5	12.1	1050	840	
	CSPH*3612A**	36,400	29,600	16.5	12.8	1050	875	58CV(A,X)070–12
	CSPH*3612A**	36,600	29,800	16.5	13.0	1050	875	58CV(A,X)090–16
	CSPH*3612A**	36,600	29,800	16.5	13.0	1050	875	58CV(A,X)110–20
	CSPH*3612A**	36,600	29,800	16.5	13.1	1050	875	58CV(A,X)135–22
	CSPH*3612A**	36,800	29,800	16.5	13.2	1050	875	58CV(A,X)155–22
	CSPH*3612A**	36,800	29,200	16.0	12.5	1100	775	58HDV060––12
	CSPH*3612A**	37,000	29,600	16.5	13.0	1080	805	58MEB060–12
	CSPH*3612A**	36,800	30,200	16.5	13.0	1055	920	58MEB080–12
	CSPH*3612A**	37,000	30,400	16.5	12.9	1080	980	58MEB080–16
	CSPH*3612A**	36,600	29,800	16.5	12.9	1050	875	58MV(B,C)080–20

See notes on page 17

COMBINATION RATINGS CONTINUED

UNIT SIZE – VOLTAGE, SERIES	INDOOR MODEL	AHRI STANDARD RATINGS COOLING CAPACITY HIGH	CAPACITY LOW	SEER	EER	ID CFM HIGH	ID CFM LOW	FURNACE MODEL
24ACB636A–30	CSPH*3612A**	36,800	29,400	16.5	12.9	1050	875	58MV(B,C)100–20
	CSPH*3612A**	36,600	29,800	16.5	13.0	1050	875	58MV(B,C)120–20
	CSPH*3612A**	36,400	29,800	16.5	13.1	1060	925	58PH*090–16
	CSPH*3612A**	35,800	29,200	14.5	12.1	1050	840	
	CSPH*4212A**	36,600	29,800	16.5	12.9	1050	875	58CV(A,X)070–12
	CSPH*4212A**	36,800	29,800	16.5	13.1	1050	875	58CV(A,X)090–16
	CSPH*4212A**	37,000	30,000	16.5	13.1	1050	875	58CV(A,X)110–20
	CSPH*4212A**	36,800	30,000	16.5	13.2	1050	875	58CV(A,X)135–22
	CSPH*4212A**	37,000	30,000	16.5	13.3	1050	875	58CV(A,X)155–22
	CSPH*4212A**	37,000	29,400	16.5	12.6	1110	785	58HDV060––12
	CSPH*4212A**	37,200	29,800	16.5	13.1	1095	815	58MEB060–12
	CSPH*4212A**	37,200	29,600	16.5	13.1	1065	780	58MEB080–12
	CSPH*4212A**	37,200	30,600	16.5	13.0	1090	990	58MEB080–16
	CSPH*4212A**	36,800	29,800	16.5	12.9	1050	875	58MV(B,C)080–14
	CSPH*4212A**	36,800	29,800	16.5	13.0	1050	875	58MV(B,C)080–20
	CSPH*4212A**	37,000	29,600	16.5	13.0	1050	875	58MV(B,C)100–20
	CSPH*4212A**	36,800	30,000	16.5	13.1	1050	875	58MV(B,C)120–20
	CSPH*4212A**	37,200	30,400	16.5	13.2	1070	935	58PH*090–16
	CSPH*4212A**	36,400	29,400	15.0	12.1	1050	840	
	CSPH*4812A**	36,800	30,000	16.5	12.9	1050	875	58CV(A,X)070–12
	CSPH*4812A**	37,000	30,000	16.5	13.1	1050	875	58CV(A,X)090–16
	CSPH*4812A**	37,000	30,000	16.5	13.1	1050	875	58CV(A,X)110–20
	CSPH*4812A**	37,000	30,000	16.5	13.2	1050	875	58CV(A,X)135–22
	CSPH*4812A**	37,200	30,000	16.5	13.3	1050	875	58CV(A,X)155–22
	CSPH*4812A**	37,200	29,600	16.5	12.6	1110	790	58HDV060––12
	CSPH*4812A**	37,400	30,000	16.5	13.1	1095	820	58MEB060–12
	CSPH*4812A**	37,400	30,600	16.5	13.1	1065	930	58MEB080–12
	CSPH*4812A**	37,400	30,800	16.5	13.1	1090	990	58MEB080–16
	CSPH*4812A**	37,000	29,800	16.5	12.9	1050	875	58MV(B,C)080–14
	CSPH*4812A**	37,000	30,000	16.5	13.0	1050	875	58MV(B,C)080–20
	CSPH*4812A**	37,200	29,800	16.5	13.1	1050	875	58MV(B,C)100–20
	CSPH*4812A**	37,000	30,000	16.5	13.2	1050	875	58MV(B,C)120–20
	CSPH*4812A**	37,400	30,600	16.5	13.2	1070	940	58PH*090–16
	CSPH*4812A**	36,600	29,400	15.0	12.2	1050	840	
	FV4CN(B,F)003	36,200	29,200	16.5	13.0	1050	840	
	FV4CN(B,F)005	37,600	30,000	16.5	13.5	1050	840	
	FV4CNB006	38,000	30,200	16.5	13.7	1050	840	
24ACB648A–30	*CNPH*6124A**	50,000	41,000	16.5	13.2	1395	1040	58MV(B,C)100–20
	CAP**4817A**	47,500	38,500	16.0	12.5	1345	1005	58CV(A,X)090–16
	CAP**4817A**	47,500	38,500	16.0	12.3	1310	1010	58MV(B,C)080–20
	CAP**4817A**	48,000	39,500	16.0	12.6	1375	1075	58PH*090–16
	CAP**4817A**	47,500	39,000	14.5	12.1	1400	1120	
	CAP**4821A**	47,500	39,000	16.0	12.3	1430	1105	58MEB080–16
	CAP**4821A**	47,500	39,000	16.0	12.6	1385	1050	58MEB100–20
	CAP**4821A**	47,500	40,000	16.0	12.7	1400	1240	58MEB120–20
	CAP**4821A**	47,000	38,500	15.5	12.3	1310	1010	58MV(B,C)080–20
	CAP**4821A**	47,000	38,500	16.0	12.2	1395	1040	58MV(B,C)100–20
	CAP**4821A**	47,500	39,000	16.0	12.7	1350	1110	58PH*110–20
	CAP**4821A**	48,000	38,500	14.5	12.0	1600	1120	
	CAP**4824A**	47,500	38,500	16.0	12.6	1355	1020	58CV(A,X)110–20
	CAP**4824A**	47,500	38,500	16.0	12.8	1355	1010	58CV(A,X)135–22
	CAP**4824A**	47,500	39,000	16.0	12.7	1410	1065	58MEB100–20
	CAP**4824A**	48,000	40,000	16.0	12.8	1425	1260	58MEB120–20
	CAP**4824A**	47,500	38,500	16.0	12.5	1360	1010	58MV(B,C)120–20
	CAP**4824A**	47,500	39,000	16.0	12.5	1415	1100	58PH*090–16
	CAP**4824A**	47,500	39,500	16.0	12.8	1375	1130	58PH*110–20
	CAP**4824A**	47,000	38,500	14.5	12.0	1400	1120	
	CAP**6021A**	48,500	39,000	16.0	12.8	1355	1020	58CV(A,X)110–20
	CAP**6021A**	48,000	39,000	16.0	12.6	1310	1010	58MV(B,C)080–20
	CAP**6021A**	48,500	39,000	16.0	12.5	1395	1040	58MV(B,C)100–20
	CAP**6021A**	48,500	39,500	16.0	12.8	1410	1100	58PH*090–16
	CAP**6021A**	48,500	39,500	16.5	13.0	1370	1125	58PH*110–20
	CAP**6021A**	48,500	40,000	16.0	12.9	1390	1225	58PH*135–20
	CAP**6021A**	48,000	39,000	14.5	12.3	1400	1120	
	CAP**6024A**	48,500	39,000	16.0	12.8	1355	1020	58CV(A,X)110–20
	CAP**6024A**	48,500	39,000	16.5	13.0	1355	1010	58CV(A,X)135–22
	CAP**6024A**	48,500	39,000	16.5	13.1	1365	1015	58CV(A,X)155–22
	CAP**6024A**	48,500	39,500	16.5	12.9	1410	1070	58MEB100–20

See notes on page 17

COMBINATION RATINGS CONTINUED

UNIT SIZE – VOLTAGE, SERIES	INDOOR MODEL	AHRI STANDARD RATINGS COOLING CAPACITY HIGH	AHRI STANDARD RATINGS COOLING CAPACITY LOW	SEER	EER	ID CFM HIGH	ID CFM LOW	FURNACE MODEL
24ACB648A–30	CAP**6024A**	49,000	40,500	16.5	13.0	1425	1260	58MEB120–20
	CAP**6024A**	48,500	39,000	16.0	12.8	1360	1010	58MV(B,C)120–20
	CAP**6024A**	48,500	40,000	16.5	13.1	1380	1130	58PH*110–20
	CAP**6024A**	48,500	40,000	16.0	12.9	1400	1235	58PH*135–20
	CNPH*4821A**	47,500	38,500	16.0	12.6	1355	1020	58CV(A,X)110–20
	CNPH*4821A**	48,000	39,500	16.0	12.3	1495	1185	58HDV080––20
	CNPH*4821A**	47,500	39,500	16.0	12.4	1430	1125	58HDV100––20
	CNPH*4821A**	47,500	38,500	16.0	12.4	1450	1020	58MEB080–16
	CNPH*4821A**	47,500	39,000	16.5	12.7	1410	1070	58MEB100–20
	CNPH*4821A**	48,000	40,000	16.0	12.8	1425	1260	58MEB120–20
	CNPH*4821A**	47,000	38,500	16.0	12.4	1310	1010	58MV(B,C)080–20
	CNPH*4821A**	47,500	39,000	16.0	12.4	1395	1040	58MV(B,C)100–20
	CNPH*4821A**	47,500	39,500	16.0	12.6	1420	1105	58PH*090–16
	CNPH*4821A**	48,000	39,500	16.0	12.8	1380	1130	58PH*110–20
	CNPH*4821A**	47,000	38,500	14.5	12.1	1400	1120	
	CNPH*6024A**	48,500	39,500	16.5	13.0	1355	1010	58CV(A,X)135–22
	CNPH*6024A**	48,500	39,500	16.5	13.2	1365	1015	58CV(A,X)155–22
	CNPH*6024A**	48,500	40,000	16.0	12.6	1440	1135	58HDV100––20
	CNPH*6024A**	48,500	39,500	16.0	12.6	1455	1130	58MEB080–16
	CNPH*6024A**	48,500	39,500	16.5	12.9	1425	1085	58MEB100–20
	CNPH*6024A**	49,000	40,500	16.5	13.0	1440	1275	58MEB120–20
	CNPH*6024A**	48,000	39,000	16.0	12.7	1310	1010	58MV(B,C)080–20
	CNPH*6024A**	48,500	39,000	16.0	12.6	1395	1040	58MV(B,C)100–20
	CNPH*6024A**	48,500	39,000	16.5	12.8	1360	1010	58MV(B,C)120–20
	CNPH*6024A**	48,500	40,000	16.5	13.1	1395	1145	58PH*110–20
	CNPH*6024A**	48,500	40,500	16.0	12.9	1420	1255	58PH*135–20
	CNPH*6024A**	48,000	39,000	14.5	12.2	1400	1120	
	CNPH*6124A**	50,000	41,000	16.5	13.5	1355	1020	58CV(A,X)110–20
	CNPH*6124A**	50,500	41,000	16.5	13.6	1355	1010	58CV(A,X)135–22
	CNPH*6124A**	49,000	40,000	16.0	12.7	1420	1115	58HDV100––20
	CNPH*6124A**	49,000	39,000	16.0	12.6	1445	1010	58MEB080–16
	CNPH*6124A**	49,000	39,500	16.5	13.0	1400	1060	58MEB100–20
	CNPH*6124A**	49,000	40,500	16.5	13.1	1420	1250	58MEB120–20
	CNPH*6124A**	50,000	41,000	16.5	13.4	1360	1010	58MV(B,C)120–20
	CNPH*6124A**	49,000	40,000	16.5	12.8	1410	1095	58PH*090–16
	CNPH*6124A**	49,000	40,000	16.5	13.1	1370	1120	58PH*110–20
	CNPH*6124A**	49,000	40,500	16.0	12.9	1390	1220	58PH*135–20
	CNPV*4821A**	47,500	38,500	16.0	12.6	1355	1020	58CV(A,X)110–20
	CNPV*4821A**	47,500	39,500	16.0	12.4	1450	1120	58MEB080–16
	CNPV*4821A**	48,000	39,000	16.5	12.7	1410	1070	58MEB100–20
	CNPV*4821A**	48,000	40,000	16.0	12.8	1425	1260	58MEB120–20
	CNPV*4821A**	47,000	38,500	16.0	12.4	1310	1010	58MV(B,C)080–20
	CNPV*4821A**	47,500	39,000	16.0	12.4	1395	1040	58MV(B,C)100–20
	CNPV*4821A**	47,500	39,500	16.0	12.8	1380	1130	58PH*110–20
	CNPV*4821A**	47,000	38,500	14.5	12.1	1400	1120	
	CNPV*4824A**	47,500	38,500	16.0	12.6	1355	1020	58CV(A,X)110–20
	CNPV*4824A**	47,500	38,500	16.5	12.8	1355	1010	58CV(A,X)135–22
	CNPV*4824A**	47,500	39,000	16.5	12.9	1365	1015	58CV(A,X)155–22
	CNPV*4824A**	48,000	39,500	16.0	12.3	1495	1185	58HDV080––20
	CNPV*4824A**	47,500	39,500	16.0	12.4	1430	1125	58HDV100––20
	CNPV*4824A**	48,000	39,000	16.5	12.7	1410	1070	58MEB100–20
	CNPV*4824A**	48,000	40,000	16.0	12.8	1425	1265	58MEB120–20
	CNPV*4824A**	48,000	40,000	16.0	12.8	1425	1260	58MEB120–20
	CNPV*4824A**	48,000	39,500	16.0	12.8	1380	1130	58PH*110–20
	CNPV*4824A**	47,500	40,000	16.0	12.7	1400	1235	58PH*135–20
	CNPV*4824A**	47,000	38,500	14.5	12.1	1400	1120	
	CNPV*6024A**	48,500	39,000	16.5	12.9	1355	1020	58CV(A,X)110–20
	CNPV*6024A**	48,500	39,000	16.5	13.0	1355	1010	58CV(A,X)135–22
	CNPV*6024A**	48,500	39,000	16.5	13.2	1365	1015	58CV(A,X)155–22
	CNPV*6024A**	48,500	40,000	16.0	12.6	1440	1135	58HDV100––20
	CNPV*6024A**	48,500	39,500	16.5	12.9	1425	1085	58MEB100–20
	CNPV*6024A**	49,000	40,500	16.5	13.1	1440	1275	58MEB120–20
	CNPV*6024A**	48,000	39,000	16.0	12.6	1310	1010	58MV(B,C)080–20
	CNPV*6024A**	48,500	39,000	16.0	12.6	1395	1040	58MV(B,C)100–20
	CNPV*6024A**	48,500	39,000	16.5	12.8	1360	1010	58MV(B,C)120–20
	CNPV*6024A**	48,500	40,000	16.5	13.1	1395	1145	58PH*110–20
	CNPV*6024A**	48,500	40,500	16.0	12.9	1420	1255	58PH*135–20
	CNPV*6024A**	48,000	39,000	14.5	12.2	1400	1120	
	CNPV*6124A**	50,500	41,500	16.5	13.7	1355	1020	58CV(A,X)110–20

See notes on page 17

COMBINATION RATINGS CONTINUED

UNIT SIZE – VOLTAGE, SERIES	INDOOR MODEL	AHRI STANDARD RATINGS COOLING CAPACITY HIGH	CAPACITY LOW	SEER	EER	ID CFM HIGH	ID CFM LOW	FURNACE MODEL
24ACB648A–30	CNPV*6124A**	50,500	41,500	16.5	13.8	1355	1010	58CV(A,X)135–22
	CNPV*6124A**	51,000	41,500	16.5	13.8	1365	1015	58CV(A,X)155–22
	CNPV*6124A**	49,500	40,500	16.5	12.8	1445	1145	58HDV100––20
	CNPV*6124A**	49,500	40,000	16.5	13.1	1430	1095	58MEB100–20
	CNPV*6124A**	49,500	41,000	16.5	13.2	1445	1285	58MEB120–20
	CNPV*6124A**	50,500	41,500	16.5	13.4	1395	1040	58MV(B,C)100–20
	CNPV*6124A**	50,500	41,500	16.5	13.6	1360	1010	58MV(B,C)120–20
	CNPV*6124A**	49,500	40,500	16.5	13.0	1435	1125	58PH*090–16
	CNPV*6124A**	49,500	40,500	16.5	13.2	1400	1160	58PH*110–20
	CNPV*6124A**	49,500	41,000	16.5	13.1	1425	1265	58PH*135–20
	CNPV*6124A**	48,500	39,500	15.0	12.4	1400	1120	
	CSPH*4812A**	47,500	39,000	16.0	12.5	1345	1005	58CV(A,X)090–16
	CSPH*4812A**	47,500	39,000	16.0	12.6	1355	1020	58CV(A,X)110–20
	CSPH*4812A**	48,000	39,000	16.0	12.8	1355	1010	58CV(A,X)135–22
	CSPH*4812A**	48,000	40,000	16.0	12.3	1465	1160	58HDV080––20
	CSPH*4812A**	48,000	39,500	16.0	12.5	1400	1100	58HDV100––20
	CSPH*4812A**	48,000	39,500	16.0	12.4	1425	1100	58MEB080–16
	CSPH*4812A**	48,000	39,000	16.5	12.8	1380	1045	58MEB100–20
	CSPH*4812A**	48,000	40,500	16.0	12.9	1395	1230	58MEB120–20
	CSPH*4812A**	48,000	39,500	16.0	12.6	1390	1080	58PH*090–16
	CSPH*4812A**	48,000	39,500	16.5	12.9	1340	1105	58PH*110–20
	CSPH*4812A**	48,000	40,000	16.0	12.7	1360	1200	58PH*135–20
	CSPH*4812A**	47,500	39,000	14.5	12.2	1400	1120	
	CSPH*6012A**	48,500	39,500	16.5	12.8	1345	1005	58CV(A,X)090–16
	CSPH*6012A**	48,500	39,500	16.5	12.9	1355	1020	58CV(A,X)110–20
	CSPH*6012A**	48,500	39,500	16.5	13.1	1355	1010	58CV(A,X)135–22
	CSPH*6012A**	49,000	39,500	16.5	13.2	1365	1015	58CV(A,X)155–22
	CSPH*6012A**	49,000	40,500	16.0	12.6	1510	1190	58HDV080––20
	CSPH*6012A**	49,000	40,000	16.5	12.7	1440	1130	58HDV100––20
	CSPH*6012A**	49,000	40,000	16.0	12.6	1460	1125	58MEB080–16
	CSPH*6012A**	49,000	40,000	16.5	13.0	1425	1075	58MEB100–20
	CSPH*6012A**	49,000	41,000	16.5	13.1	1440	1270	58MEB120–20
	CSPH*6012A**	48,000	39,000	16.0	12.7	1310	1010	58MV(B,C)080–20
	CSPH*6012A**	48,500	39,500	16.0	12.6	1395	1040	58MV(B,C)100–20
	CSPH*6012A**	48,500	39,500	16.5	12.9	1360	1010	58MV(B,C)120–20
	CSPH*6012A**	49,000	40,000	16.5	12.9	1430	1110	58PH*090–16
	CSPH*6012A**	49,000	40,000	16.5	13.1	1395	1135	58PH*110–20
	CSPH*6012A**	49,000	40,500	16.5	13.0	1420	1250	58PH*135–20
	CSPH*6012A**	48,500	39,500	15.0	12.3	1400	1120	
	FV4CN(B,F)005	48,500	40,000	16.5	13.1	1400	1120	
	FV4CNB006	49,500	40,500	16.5	13.4	1400	1120	
24ACB660A–30	*CNPH*6124A**	59,000	47,000	16.5	13.0	1675	1245	58PH*110–20
	CAP**6021A**	58,500	47,000	16.0	12.7	1750	1400	58CV(A,X)110–20
	CAP**6021A**	58,000	46,500	16.0	12.9	1620	1255	58MEB100–20
	CAP**6021A**	58,500	47,000	16.5	13.0	1625	1270	58MEB120–20
	CAP**6021A**	58,000	46,500	15.5	12.0	1750	1400	58MV(B,C)080–20
	CAP**6021A**	58,000	47,000	15.5	12.3	1750	1400	58MV(B,C)100–20
	CAP**6021A**	58,500	46,500	16.5	13.0	1670	1250	58PH*110–20
	CAP**6021A**	58,500	46,500	15.0	12.6	1750	1400	
	CAP**6024A**	58,500	47,000	16.0	13.0	1750	1400	58CV(A,X)135–22
	CAP**6024A**	59,000	47,500	16.5	13.1	1750	1400	58CV(A,X)155–22
	CAP**6024A**	58,500	47,500	15.5	12.4	1775	1415	58HDV100––20
	CAP**6024A**	58,500	46,500	16.0	12.9	1630	1260	58MEB100–20
	CAP**6024A**	58,500	47,000	16.5	13.1	1640	1280	58MEB120–20
	CAP**6024A**	58,000	47,000	15.5	12.6	1750	1400	58MV(B,C)120–20
	CAP**6024A**	58,500	46,500	16.0	12.9	1650	1260	58PH*135–20
	CAP**6024A**	58,500	46,500	15.0	12.6	1750	1400	
	CNPH*6024A**	58,500	47,000	16.0	12.8	1750	1400	58CV(A,X)110–20
	CNPH*6024A**	58,500	47,000	16.0	13.0	1750	1400	58CV(A,X)135–22
	CNPH*6024A**	58,500	47,500	16.5	13.1	1750	1400	58CV(A,X)155–22
	CNPH*6024A**	58,500	47,000	16.5	13.0	1645	1275	58MEB100–20
	CNPH*6024A**	58,500	47,000	16.5	13.0	1655	1290	58MEB120–20
	CNPH*6024A**	57,500	47,000	15.5	12.3	1750	1400	58MV(B,C)100–20
	CNPH*6024A**	58,000	47,000	16.0	12.6	1750	1400	58MV(B,C)120–20
	CNPH*6024A**	58,500	47,000	16.5	13.0	1700	1275	58PH*110–20
	CNPH*6024A**	58,500	47,000	16.0	12.9	1670	1280	58PH*135–20
	CNPH*6024A**	58,500	46,500	15.0	12.6	1750	1400	
	CNPH*6124A**	58,500	47,500	16.0	12.8	1750	1400	58CV(A,X)110–20
	CNPH*6124A**	59,000	47,500	16.0	13.0	1750	1400	58CV(A,X)135–22

See notes on page 17

COMBINATION RATINGS CONTINUED

UNIT SIZE – VOLTAGE, SERIES	INDOOR MODEL	AHRI STANDARD RATINGS COOLING CAPACITY HIGH	CAPACITY LOW	SEER	EER	ID CFM HIGH	ID CFM LOW	FURNACE MODEL
24ACB660A–30	CNPH*6124A**	59,000	47,500	16.5	13.2	1750	1400	58CV(A,X)155–22
	CNPH*6124A**	58,500	47,500	15.5	12.4	1765	1410	58HDV100––20
	CNPH*6124A**	58,500	47,000	16.5	13.0	1625	1255	58MEB100–20
	CNPH*6124A**	58,500	47,000	16.5	13.1	1630	1270	58MEB120–20
	CNPH*6124A**	58,000	47,500	15.5	12.3	1750	1400	58MV(B,C)100–20
	CNPH*6124A**	58,500	47,500	15.5	12.6	1750	1400	58MV(B,C)120–20
	CNPH*6124A**	58,500	47,000	16.0	12.9	1640	1245	58PH*135–20
	CNPH*6124A**	59,000	47,000	15.0	12.7	1750	1400	
	CNPV*6024A**	58,500	47,000	16.0	12.8	1750	1400	58CV(A,X)110–20
	CNPV*6024A**	58,500	47,000	16.0	13.0	1750	1400	58CV(A,X)135–22
	CNPV*6024A**	58,500	47,500	16.5	13.1	1750	1400	58CV(A,X)155–22
	CNPV*6024A**	58,500	47,500	15.5	12.4	1785	1425	58HDV100––20
	CNPV*6024A**	58,500	47,000	16.5	13.0	1645	1275	58MEB100–20
	CNPV*6024A**	58,500	47,000	16.5	13.1	1655	1290	58MEB120–20
	CNPV*6024A**	57,500	47,000	15.5	12.3	1750	1400	58MV(B,C)100–20
	CNPV*6024A**	58,000	47,000	16.0	12.6	1750	1400	58MV(B,C)120–20
	CNPV*6024A**	58,500	47,500	16.0	13.0	1700	1425	58PH*110–20
	CNPV*6024A**	58,500	47,000	16.0	12.9	1670	1280	58PH*135–20
	CNPV*6024A**	58,500	46,500	15.0	12.6	1750	1400	
	CNPV*6124A**	59,000	48,000	16.0	13.0	1750	1400	58CV(A,X)110–20
	CNPV*6124A**	59,500	48,000	16.5	13.2	1750	1400	58CV(A,X)135–22
	CNPV*6124A**	59,500	48,000	16.5	13.3	1750	1400	58CV(A,X)155–22
	CNPV*6124A**	59,000	48,000	16.0	12.6	1790	1430	58HDV100––20
	CNPV*6124A**	59,000	47,500	16.5	13.1	1650	1285	58MEB100–20
	CNPV*6124A**	58,500	47,000	16.5	13.0	1660	1300	58MEB120–20
	CNPV*6124A**	58,500	47,500	15.5	12.5	1750	1400	58MV(B,C)100–20
	CNPV*6124A**	59,000	47,500	16.0	12.8	1750	1400	58MV(B,C)120–20
	CNPV*6124A**	59,500	48,500	16.5	13.2	1710	1435	58PH*110–20
	CNPV*6124A**	59,000	47,500	16.5	13.1	1675	1290	58PH*135–20
	CNPV*6124A**	59,500	47,500	15.0	12.8	1750	1400	
	CSPH*6012A**	58,500	47,500	16.0	12.9	1750	1400	58CV(A,X)110–20
	CSPH*6012A**	59,000	47,500	16.5	13.1	1750	1400	58CV(A,X)135–22
	CSPH*6012A**	59,000	47,500	16.5	13.2	1750	1400	58CV(A,X)155–22
	CSPH*6012A**	58,500	47,000	16.5	13.1	1650	1270	58MEB100–20
	CSPH*6012A**	58,000	47,000	15.5	12.2	1750	1400	58MV(B,C)080–20
	CSPH*6012A**	58,000	47,500	15.5	12.4	1750	1400	58MV(B,C)100–20
	CSPH*6012A**	58,500	47,500	16.0	12.7	1750	1400	58MV(B,C)120–20
	CSPH*6012A**	59,000	47,000	16.5	13.1	1710	1270	58PH*110–20
	CSPH*6012A**	58,500	47,000	16.5	13.0	1675	1275	58PH*135–20
	CSPH*6012A**	59,000	47,000	15.0	12.7	1750	1400	
	FV4CNB006	59,500	48,000	16.5	13.4	1750	1400	

* Tested combination

EER — Energy Efficiency Ratio

SEER — Seasonal Energy Efficiency Ratio

TDR — Time–Delay Relay. In most cases, only 1 method should be used to achieve TDR function. Using more than 1 method in a system may cause degradation in performance. Use either the accessory Time–Delay Relay KAATD0101TDR or a furnace equipped with TDR. Most Carrier furnaces are equipped with TDR.

TXV — Thermostatic Expansion Valve

NOTES:
1. Ratings are net values reflecting the effects of circulating fan motor heat. Supplemental electric heat is not included.
2. Tested outdoor/indoor combinations have been tested in accordance with DOE test procedures for central air conditioners. Ratings for other combinations are determined under DOE computer simulation procedures.
3. Determine actual CFM values obtainable for your system by referring to fan performance data in fan coil or furnace coil literature.
4. Do not apply with capillary tube coils as performance and reliability are significantly affected.

DETAILED COOLING CAPACITIES#

EVAPORATOR AIR		CONDENSER ENTERING AIR TEMPERATURES °F (°C)																	
		75 (23.9)			85 (29.4)			95 (35)			105 (40.6)			115 (46.1)			125 (51.7)		
CFM	EWB °F (°C)	Capacity MBtuh		Total System KW**	Capacity MBtuh		Total System KW**	Capacity MBtuh		Total System KW**	Capacity MBtuh		Total System KW**	Capacity MBtuh		Total System KW**	Capacity MBtuh		Total System KW**
		Total	Sens‡		Total	Sens‡		Total	Sens‡		Total	Sens‡		Total	Sens‡		Total	Sens‡	
24ACB624 LOW Outdoor Section With CNPVP4217 Indoor Section																			
450	57 (13.9)	16.08	16.08	1.00	15.50	15.50	1.16	14.87	14.87	1.35	14.19	14.19	1.56	13.45	13.45	1.81	12.64	12.64	2.10
	62 (16.7)	17.21	13.77	1.01	16.42	13.42	1.17	15.57	13.04	1.35	14.66	12.65	1.56	13.67	12.23	1.81	12.67	12.67	2.10
	63 (17.2)††	17.63	11.41	1.01	16.83	11.06	1.17	15.96	10.68	1.35	15.03	10.29	1.56	14.01	9.87	1.81	12.93	9.43	2.10
	67 (19.4)	19.26	11.92	1.02	18.39	11.56	1.18	17.45	11.19	1.36	16.45	10.80	1.57	15.37	10.38	1.82	14.21	9.93	2.11
	72 (22.2)	21.55	10.03	1.04	20.58	9.67	1.19	19.55	9.30	1.37	18.47	8.91	1.58	17.29	8.49	1.82	16.03	8.05	2.12
500	57 (13.9)	16.84	16.84	1.01	16.22	16.22	1.17	15.55	15.55	1.36	14.82	14.82	1.57	14.03	14.03	1.82	13.17	13.17	2.11
	62 (16.7)	17.70	14.66	1.02	16.87	14.29	1.18	15.98	13.91	1.36	15.03	13.50	1.57	14.06	14.06	1.82	13.19	13.19	2.11
	63 (17.2)††	18.12	12.03	1.02	17.27	11.67	1.18	16.36	11.29	1.36	15.38	10.88	1.57	14.33	10.45	1.82	13.20	10.00	2.11
	67 (19.4)	19.78	12.58	1.03	18.87	12.22	1.19	17.89	11.84	1.37	16.83	11.43	1.58	15.70	11.00	1.82	14.50	10.55	2.12
	72 (22.2)	22.13	10.48	1.05	21.12	10.11	1.20	20.05	9.73	1.38	18.90	9.32	1.59	17.66	8.90	1.83	16.34	8.45	2.13
585	57 (13.9)	17.95	17.95	1.03	17.27	17.27	1.19	16.53	16.53	1.37	15.73	15.73	1.58	14.87	14.87	1.83	13.93	13.93	2.13
	62 (16.7)	18.37	16.11	1.04	17.49	15.73	1.19	16.58	16.53	1.37	15.76	15.76	1.58	14.90	14.90	1.83	13.96	13.96	2.13
	63 (17.2)††	18.78	13.04	1.04	17.86	12.67	1.20	16.89	12.27	1.38	15.84	11.84	1.59	14.74	11.41	1.83	13.56	10.94	2.13
	67 (19.4)	20.49	13.66	1.05	19.51	13.29	1.20	18.46	12.89	1.38	17.34	12.47	1.59	16.14	12.03	1.84	14.88	11.56	2.13
	72 (22.2)	22.90	11.19	1.06	21.83	10.81	1.22	20.68	10.41	1.39	19.45	10.00	1.60	18.15	9.56	1.85	16.76	9.10	2.14
640	57 (13.9)	18.58	18.58	1.04	17.86	17.86	1.20	17.08	17.08	1.38	16.25	16.25	1.59	15.34	15.34	1.84	14.36	14.36	2.14
	62 (16.7)	18.74	17.02	1.05	17.89	17.89	1.20	17.11	17.11	1.38	16.28	16.28	1.59	15.36	15.36	1.84	14.38	14.38	2.14
	63 (17.2)††	19.11	13.67	1.05	18.17	13.29	1.20	17.17	12.88	1.38	16.10	12.46	1.59	14.95	12.01	1.84	13.74	11.53	2.13
	67 (19.4)	20.85	14.34	1.06	19.83	13.95	1.21	18.76	13.55	1.39	17.60	13.12	1.60	16.38	12.67	1.85	15.07	12.20	2.14
	72 (22.2)	23.30	11.62	1.07	22.18	11.24	1.23	21.00	10.83	1.40	19.75	10.41	1.61	18.40	9.97	1.85	16.96	9.50	2.15

EVAPORATOR AIR		CONDENSER ENTERING AIR TEMPERATURES °F (°C)																	
		75 (23.9)			85 (29.4)			95 (35)			105 (40.6)			115 (46.1)			125 (51.7)		
CFM	EWB °F (°C)	Capacity MBtuh		Total System KW**	Capacity MBtuh		Total System KW**	Capacity MBtuh		Total System KW**	Capacity MBtuh		Total System KW**	Capacity MBtuh		Total System KW**	Capacity MBtuh		Total System KW**
		Total	Sens‡		Total	Sens‡		Total	Sens‡		Total	Sens‡		Total	Sens‡		Total	Sens‡	
24ACB624 HIGH Outdoor Section With CNPVP4217 Indoor Section																			
600	57 (13.9)	22.73	22.73	1.53	22.01	22.01	1.69	21.22	21.22	1.86	20.36	20.36	2.04	19.43	19.43	2.24	18.40	18.40	2.48
	62 (16.7)	24.15	20.31	1.54	23.17	19.64	1.70	22.12	18.95	1.86	20.99	18.24	2.05	19.77	17.52	2.25	18.49	16.78	2.48
	63 (17.2)††	24.66	16.79	1.54	23.66	16.15	1.70	22.58	15.49	1.87	21.42	14.82	2.05	20.18	14.13	2.25	18.83	13.42	2.48
	67 (19.4)	26.66	17.43	1.56	25.58	16.77	1.71	24.42	16.11	1.88	23.17	15.43	2.06	21.85	14.74	2.27	20.40	14.03	2.50
	72 (22.2)	29.46	14.50	1.58	28.27	13.87	1.73	27.00	13.23	1.90	25.65	12.59	2.09	24.19	11.93	2.29	22.62	11.25	2.52
715	57 (13.9)	24.27	24.27	1.56	23.46	23.46	1.72	22.58	22.58	1.89	21.64	21.64	2.07	20.61	20.61	2.28	19.47	19.47	2.51
	62 (16.7)	25.08	22.43	1.57	24.03	21.72	1.72	22.91	20.98	1.89	21.73	20.23	2.07	20.64	20.64	2.28	19.51	19.51	2.51
	63 (17.2)††	25.57	18.25	1.57	24.48	17.57	1.73	23.32	16.88	1.89	22.08	16.18	2.08	20.76	15.47	2.28	19.33	14.73	2.51
	67 (19.4)	27.62	18.98	1.59	26.45	18.30	1.74	25.20	17.60	1.91	23.87	16.89	2.09	22.46	16.18	2.29	20.93	15.44	2.52
	72 (22.2)	30.50	15.50	1.61	29.22	14.84	1.76	27.85	14.18	1.93	26.40	13.51	2.11	24.85	12.83	2.32	23.19	12.13	2.55
750	57 (13.9)	24.68	24.68	1.57	23.85	23.85	1.73	22.95	22.95	1.90	21.97	21.97	2.08	20.92	20.92	2.29	19.76	19.76	2.52
	62 (16.7)	25.32	23.05	1.58	24.25	22.33	1.73	23.12	21.58	1.90	22.01	22.01	2.08	20.95	20.95	2.29	19.79	19.79	2.52
	63 (17.2)††	25.79	18.67	1.58	24.69	17.99	1.74	23.50	17.29	1.90	22.24	16.58	2.08	20.90	15.86	2.29	19.45	15.12	2.51
	67 (19.4)	27.85	19.44	1.59	26.66	18.74	1.75	25.39	18.04	1.92	24.04	17.33	2.10	22.61	16.60	2.30	21.06	15.86	2.53
	72 (22.2)	30.75	15.79	1.62	29.44	15.13	1.77	28.06	14.46	1.94	26.58	13.78	2.12	25.01	13.09	2.33	23.32	12.39	2.55
800	57 (13.9)	25.23	25.23	1.59	24.36	24.36	1.74	23.43	23.43	1.91	22.42	22.42	2.09	21.33	21.33	2.30	20.13	20.13	2.53
	62 (16.7)	25.63	23.93	1.59	24.55	23.18	1.74	23.46	23.46	1.91	22.45	22.45	2.10	21.36	21.36	2.30	20.16	20.16	2.53
	63 (17.2)††	26.08	19.27	1.59	24.94	18.57	1.75	23.73	17.86	1.91	22.45	17.15	2.10	21.08	16.41	2.30	19.61	15.66	2.52
	67 (19.4)	28.15	20.08	1.61	26.93	19.37	1.76	25.63	18.66	1.93	24.26	17.94	2.11	22.79	17.20	2.31	21.22	16.44	2.54
	72 (22.2)	31.08	16.19	1.63	29.73	15.52	1.78	28.31	14.84	1.95	26.81	14.16	2.13	25.21	13.46	2.34	23.49	12.75	2.56

DETAILED COOLING CAPACITIES# (CONTINUED)

24ACB624 Outdoor Section With CNPVP4217 Indoor Section

Cooling Indoor Model	High Speed Cap.	Power	Low Speed Cap.	Power	Furnace Model
*CNPV*4217A**	1.00	1.00	1.00	1.00	58PH*045–08
CAP**2414A**	0.96	1.07	0.95	1.13	
CAP**2417A**	0.96	1.07	0.95	1.13	
CAP**3014A**	0.97	1.07	0.95	1.13	
CAP**3017A**	0.97	1.07	0.95	1.13	
CAP**3614A**	0.97	1.07	0.96	1.14	
CAP**3617A**	0.97	1.07	0.96	1.14	
CAP**3621A**	0.97	1.07	0.96	1.14	
CNPH*2417A**	0.96	1.07	0.96	1.14	
CNPH*3017A**	0.97	1.07	0.95	1.13	
CNPH*3617A**	0.97	1.07	0.95	1.13	
CNPV*2414A**	0.96	1.07	0.96	1.14	
CNPV*2417A**	0.96	1.07	0.96	1.14	
CNPV*3014A**	0.97	1.07	0.95	1.13	
CNPV*3017A**	0.97	1.07	0.95	1.13	
CNPV*3117A**	0.98	1.07	0.98	1.14	
CNPV*3617A**	0.97	1.07	0.95	1.13	
CNPV*3717A**	1.00	1.08	0.99	1.14	
CSPH*2412A**	0.98	1.07	0.97	1.14	
CSPH*3012A**	0.98	1.08	0.96	1.13	
CSPH*3612A**	0.98	1.07	0.97	1.13	
FV4CN(B,F)003	0.99	0.97	0.99	0.96	
FV4CNF002	0.99	0.98	0.99	0.97	
CAP**3014A**	0.98	0.98	0.95	0.97	58CV(A,X)070–12
CAP**3614A**	0.98	0.99	0.95	0.97	58CV(A,X)070–12
CNPH*3017A**	0.98	0.98	0.95	0.97	58CV(A,X)070–12
CNPH*3617A**	0.98	0.98	0.95	0.97	58CV(A,X)070–12
CNPV*2414A**	0.97	0.99	0.95	0.98	58CV(A,X)070–12
CNPV*3014A**	0.98	0.99	0.95	0.97	58CV(A,X)070–12
CSPH*2412A**	0.98	1.00	0.96	0.98	58CV(A,X)070–12
CSPH*3012A**	0.98	0.99	0.95	0.97	58CV(A,X)070–12
CSPH*3612A**	0.99	0.98	0.97	0.98	58CV(A,X)070–12
CAP**2417A**	0.98	0.98	0.95	0.96	58CV(A,X)090–16
CAP**3017A**	0.98	0.98	0.95	0.96	58CV(A,X)090–16
CAP**3617A**	0.98	0.98	0.96	0.97	58CV(A,X)090–16
CNPH*2417A**	0.98	0.98	0.96	0.98	58CV(A,X)090–16
CNPH*3017A**	0.98	0.98	0.95	0.96	58CV(A,X)090–16
CNPH*3617A**	0.98	0.98	0.95	0.96	58CV(A,X)090–16
CNPV*2417A**	0.98	0.98	0.96	0.98	58CV(A,X)090–16
CNPV*3017A**	0.98	0.98	0.95	0.96	58CV(A,X)090–16
CNPV*3117A**	1.00	0.98	0.97	0.96	58CV(A,X)090–16
CNPV*3617A**	0.98	0.98	0.95	0.96	58CV(A,X)090–16

Cooling Indoor Model	High Speed Cap.	Power	Low Speed Cap.	Power	Furnace Model
CNPV*3717A**	1.01	0.98	0.98	0.96	58CV(A,X)090–16
CSPH*2412A**	0.98	0.98	0.96	0.98	58CV(A,X)090–16
CSPH*3012A**	0.98	0.98	0.96	0.97	58CV(A,X)090–16
CSPH*3612A**	1.00	0.98	0.97	0.97	58CV(A,X)090–16
CNPH*3017A**	0.99	1.02	0.98	1.00	58HDV040––12
CNPH*3617A**	0.99	1.02	0.99	1.00	58HDV040––12
CSPH*2412A**	0.98	1.02	0.98	1.01	58HDV040––12
CSPH*3012A**	0.99	1.02	0.98	1.00	58HDV040––12
CSPH*3612A**	1.02	1.02	1.00	1.00	58HDV040––12
CNPH*3017A**	1.00	1.02	1.00	1.01	58HDV060––12
CNPH*3617A**	1.00	1.02	1.00	1.01	58HDV060––12
CSPH*2412A**	0.99	1.02	0.99	1.02	58HDV060––12
CSPH*3012A**	1.00	1.02	0.99	1.01	58HDV060––12
CSPH*3612A**	1.02	1.02	1.02	1.02	58HDV060––12
CAP**2417A**	1.00	0.99	1.01	1.00	58MEB040–12
CAP**3014A**	1.00	0.99	1.01	1.00	58MEB040–12
CAP**3017A**	1.01	0.99	1.01	0.99	58MEB040–12
CAP**3614A**	1.01	0.99	1.01	0.99	58MEB040–12
CAP**3617A**	1.01	0.99	1.02	0.99	58MEB040–12
CNPH*2417A**	0.99	0.99	1.00	0.99	58MEB040–12
CNPH*3017A**	1.01	0.99	1.01	0.99	58MEB040–12
CNPV*2414A**	0.99	0.99	1.00	0.99	58MEB040–12
CNPV*2417A**	0.99	0.99	1.00	0.99	58MEB040–12
CNPV*3014A**	1.00	0.99	1.00	0.99	58MEB040–12
CNPV*3621A**	1.01	0.99	1.02	1.00	58MEB040–12
CSPH*2412A**	1.00	0.99	1.00	0.99	58MEB040–12
CSPH*3012A**	1.01	0.99	1.01	0.99	58MEB040–12
CSPH*3612A**	1.02	0.99	1.04	1.00	58MEB040–12
CAP**2417A**	1.00	0.99	1.00	0.99	58MEB060–12
CAP**3014A**	1.00	0.99	0.99	0.98	58MEB060–12
CAP**3017A**	1.01	0.99	1.01	0.99	58MEB060–12
CAP**3614A**	1.01	0.99	1.00	0.98	58MEB060–12
CAP**3617A**	1.02	0.99	1.01	0.99	58MEB060–12
CAP**3621A**	1.02	0.99	1.02	0.99	58MEB060–12
CNPH*2417A**	0.99	0.99	0.99	0.98	58MEB060–12
CNPH*3017A**	1.01	0.99	1.01	0.99	58MEB060–12
CNPH*3617A**	1.00	0.99	1.01	0.99	58MEB060–12
CNPV*2414A**	0.99	0.99	0.99	0.98	58MEB060–12
CNPV*2417A**	0.99	1.00	0.99	0.98	58MEB060–12
CNPV*3014A**	1.00	0.99	0.99	0.98	58MEB060–12
CNPV*3017A**	1.01	0.99	1.01	0.99	58MEB060–12

Cooling Indoor Model	High Speed Cap.	Power	Low Speed Cap.	Power	Furnace Model
CNPV*3117A**	1.02	0.98	1.03	0.99	58MEB060–12
CNPV*3621A**	1.01	0.99	1.01	0.99	58MEB060–12
CNPV*3717A**	1.04	0.99	1.05	0.99	58MEB060–12
CSPH*2412A**	1.00	1.00	0.98	0.98	58MEB060–12
CSPH*3012A**	1.01	0.99	1.00	0.98	58MEB060–12
CSPH*3612A**	1.03	0.99	1.03	0.99	58MEB060–12
CAP**2417A**	0.98	0.98	0.95	0.97	58MV(B,C)060–14
CAP**3017A**	0.99	0.98	0.95	0.96	58MV(B,C)060–14
CAP**3617A**	1.00	0.99	0.95	0.96	58MV(B,C)060–14
CNPH*2417A**	0.98	1.00	0.95	0.97	58MV(B,C)060–14
CNPH*3017A**	0.99	0.98	0.95	0.96	58MV(B,C)060–14
CNPH*3617A**	0.99	0.98	0.95	0.96	58MV(B,C)060–14
CNPV*2417A**	0.98	1.00	0.95	0.97	58MV(B,C)060–14
CNPV*3017A**	0.99	0.98	0.95	0.96	58MV(B,C)060–14
CNPV*3117A**	1.02	0.99	0.97	0.96	58MV(B,C)060–14
CNPV*3617A**	0.99	0.98	0.95	0.96	58MV(B,C)060–14
CNPV*3717A**	1.02	0.99	0.98	0.96	58MV(B,C)060–14
CSPH*2412A**	1.00	1.01	0.96	0.98	58MV(B,C)060–14
CSPH*3012A**	1.00	1.00	0.96	0.97	58MV(B,C)060–14
CSPH*3612A**	1.02	0.99	0.97	0.97	58MV(B,C)060–14
CAP**3621A**	0.98	0.98	0.95	0.96	58MV(B,C)080–14
CNPH*2417A**	0.98	0.99	0.95	0.97	58MV(B,C)080–14
CNPH*3017A**	0.98	0.98	0.95	0.96	58MV(B,C)080–14
CNPH*3617A**	0.98	0.98	0.95	0.96	58MV(B,C)080–14
CNPH*2417A**	0.98	1.00	0.95	0.97	58MVB040–14
CNPH*3017A**	0.98	0.99	0.95	0.97	58MVB040–14
CNPH*3617A**	0.98	0.99	0.95	0.97	58MVB040–14
CSPH*2412A**	0.98	1.00	0.96	0.98	58MVB040–14
CSPH*3012A**	0.98	0.99	0.96	0.98	58MVB040–14
CSPH*3612A**	1.00	0.99	0.97	0.97	58MVB040–14
CAP**3014A**	0.99	1.01	0.98	1.00	58PH*045–08
CAP**3614A**	0.99	1.00	0.99	1.00	58PH*045–08
CNPH*2417A**	0.98	1.00	0.98	1.00	58PH*045–08
CNPH*3017A**	0.99	1.00	0.99	1.00	58PH*045–08
CNPH*3617A**	0.99	1.00	0.99	1.00	58PH*045–08
CNPV*2414A**	0.98	1.00	0.98	1.00	58PH*045–08
CNPV*3014A**	0.98	1.00	0.98	1.00	58PH*045–08
CSPH*2412A**	0.98	1.00	0.98	1.00	58PH*045–08
CSPH*3012A**	0.99	1.00	0.99	1.00	58PH*045–08
CSPH*3612A**	1.01	1.00	1.01	1.00	58PH*045–08

See notes on page 26

DETAILED COOLING CAPACITIES# (CONTINUED)

EVAPORATOR AIR		CONDENSER ENTERING AIR TEMPERATURES °F (°C)																	
		75 (23.9)			85 (29.4)			95 (35)			105 (40.6)			115 (46.1)			125 (51.7)		
CFM	EWB °F (°C)	Capacity MBtuh		Total System KW**	Capacity MBtuh		Total System KW**	Capacity MBtuh		Total System KW**	Capacity MBtuh		Total System KW**	Capacity MBtuh		Total System KW**	Capacity MBtuh		Total System KW**
		Total	Sens‡		Total	Sens‡		Total	Sens‡		Total	Sens‡		Total	Sens‡		Total	Sens‡	
24ACB636 HIGH Outdoor Section With CNPVP4821 Indoor Section																			
700	57 (13.9)	23.87	23.87	1.49	22.84	22.84	1.67	21.77	21.77	1.86	20.65	20.65	2.09	19.47	19.47	2.34	18.23	18.23	2.64
	62 (16.7)	24.93	19.49	1.49	23.58	18.94	1.66	22.19	18.38	1.86	20.78	17.80	2.08	19.51	19.51	2.34	18.26	18.26	2.64
	63 (17.2)††	25.49	15.95	1.48	24.11	15.40	1.66	22.67	14.84	1.86	21.19	14.27	2.08	19.65	13.69	2.34	18.05	13.09	2.64
	67 (19.4)	27.75	16.65	1.47	26.25	16.10	1.65	24.71	15.54	1.84	23.11	14.97	2.06	21.47	14.39	2.31	19.75	13.79	2.61
	72 (22.2)	30.87	13.76	1.46	29.23	13.21	1.63	27.54	12.65	1.82	25.80	12.08	2.03	24.00	11.50	2.28	22.12	10.91	2.57
840	57 (13.9)	25.59	25.59	1.51	24.45	24.45	1.68	23.26	23.26	1.87	22.01	22.01	2.09	20.71	20.71	2.34	19.34	19.34	2.64
	62 (16.7)	25.95	21.71	1.50	24.55	24.32	1.68	23.30	23.30	1.87	22.05	22.05	2.09	20.75	20.75	2.34	19.37	19.37	2.64
	63 (17.2)††	26.45	17.47	1.50	24.95	16.90	1.68	23.42	16.32	1.87	21.84	15.73	2.10	20.22	15.13	2.35	18.54	14.52	2.66
	67 (19.4)	28.75	18.28	1.49	27.14	17.71	1.66	25.49	17.13	1.86	23.80	16.54	2.07	22.06	15.94	2.33	20.26	15.33	2.62
	72 (22.2)	31.95	14.80	1.48	30.19	14.23	1.65	28.38	13.65	1.84	26.52	13.06	2.05	24.61	12.47	2.30	22.64	11.87	2.59
960	57 (13.9)	26.80	26.80	1.52	25.57	25.57	1.69	24.29	24.29	1.88	22.95	22.95	2.10	21.56	21.56	2.35	20.10	20.10	2.64
	62 (16.7)	26.85	26.85	1.52	25.61	25.61	1.69	24.33	24.33	1.88	22.99	22.99	2.10	21.60	21.60	2.35	20.13	20.13	2.64
	63 (17.2)††	27.05	18.71	1.52	25.49	18.13	1.69	23.89	17.53	1.89	22.26	16.93	2.11	20.59	16.32	2.37	18.86	15.68	2.67
	67 (19.4)	29.37	19.61	1.51	27.70	19.02	1.68	25.98	18.43	1.87	24.23	17.83	2.09	22.43	17.22	2.34	20.58	16.59	2.64
	72 (22.2)	32.61	15.63	1.50	30.77	15.05	1.67	28.89	14.46	1.85	26.96	13.86	2.07	24.98	13.26	2.31	22.94	12.65	2.60
1020	57 (13.9)	27.33	27.33	1.53	26.06	26.06	1.70	24.74	24.74	1.89	23.37	23.37	2.11	21.93	21.93	2.36	20.43	20.43	2.65
	62 (16.7)	27.38	27.38	1.53	26.10	26.10	1.70	24.77	24.77	1.89	23.40	23.40	2.11	21.96	21.96	2.36	20.46	20.46	2.65
	63 (17.2)††	27.30	19.31	1.53	25.71	18.72	1.70	24.09	18.12	1.90	22.44	17.51	2.12	20.74	16.88	2.37	19.02	16.22	2.67
	67 (19.4)	29.63	20.25	1.52	27.93	19.66	1.69	26.19	19.07	1.88	24.41	18.46	2.10	22.59	17.84	2.35	20.73	17.19	2.64
	72 (22.2)	32.88	16.03	1.51	31.00	15.44	1.68	29.09	14.85	1.86	27.13	14.25	2.07	25.13	13.64	2.32	23.05	13.02	2.61

EVAPORATOR AIR		CONDENSER ENTERING AIR TEMPERATURES °F (°C)																	
		75 (23.9)			85 (29.4)			95 (35)			105 (40.6)			115 (46.1)			125 (51.7)		
CFM	EWB °F (°C)	Capacity MBtuh		Total System KW**	Capacity MBtuh		Total System KW**	Capacity MBtuh		Total System KW**	Capacity MBtuh		Total System KW**	Capacity MBtuh		Total System KW**	Capacity MBtuh		Total System KW**
		Total	Sens‡		Total	Sens‡		Total	Sens‡		Total	Sens‡		Total	Sens‡		Total	Sens‡	
24ACB636 HIGH Outdoor Section With CNPVP4821 Indoor Section																			
900	57 (13.9)	33.33	33.33	2.24	32.15	32.15	2.46	30.88	30.88	2.70	29.56	29.56	2.97	28.14	28.14	3.26	26.61	26.61	3.59
	62 (16.7)	35.31	29.54	2.26	33.74	28.47	2.48	32.09	27.39	2.72	30.37	26.30	2.98	28.57	25.20	3.27	26.70	26.52	3.59
	63 (17.2)††	36.04	24.41	2.26	34.43	23.39	2.48	32.74	22.37	2.72	30.96	21.34	2.98	29.09	20.31	3.28	27.10	19.26	3.60
	67 (19.4)	38.95	25.33	2.29	37.22	24.31	2.51	35.42	23.28	2.75	33.52	22.24	3.02	31.52	21.20	3.31	29.38	20.15	3.63
	72 (22.2)	42.96	21.05	2.34	41.08	20.07	2.56	39.11	19.10	2.80	37.05	18.12	3.06	34.86	17.13	3.35	32.53	16.13	3.68
1090	57 (13.9)	35.76	35.76	2.29	34.44	34.44	2.51	33.04	33.04	2.75	31.56	31.56	3.02	29.98	29.98	3.31	28.28	28.28	3.64
	62 (16.7)	36.78	32.85	2.30	35.11	31.71	2.52	33.37	30.55	2.76	31.63	31.49	3.02	30.03	30.03	3.32	28.33	28.33	3.64
	63 (17.2)††	37.44	26.68	2.30	35.70	25.61	2.52	33.89	24.55	2.76	31.96	23.46	3.02	30.00	22.39	3.32	27.89	21.29	3.64
	67 (19.4)	40.41	27.76	2.34	38.54	26.68	2.56	36.60	25.60	2.79	34.57	24.52	3.06	32.32	23.39	3.34	30.19	22.33	3.67
	72 (22.2)	44.50	22.59	2.38	42.46	21.58	2.60	40.37	20.57	2.84	38.15	19.55	3.10	35.82	18.52	3.39	33.35	17.49	3.72
1200	57 (13.9)	36.91	36.91	2.32	35.51	35.51	2.55	34.05	34.05	2.79	32.47	32.47	3.05	30.83	30.83	3.35	29.05	29.05	3.68
	62 (16.7)	37.46	34.64	2.33	35.76	33.44	2.55	34.08	34.08	2.79	32.51	32.51	3.05	30.88	30.88	3.35	29.09	29.09	3.68
	63 (17.2)††	38.02	27.90	2.33	36.23	26.81	2.55	34.36	25.72	2.79	32.37	24.61	3.05	30.37	23.52	3.34	28.21	22.39	3.66
	67 (19.4)	41.01	29.06	2.37	39.08	27.96	2.58	37.09	26.86	2.82	35.00	25.76	3.08	32.82	24.64	3.37	30.51	23.52	3.70
	72 (22.2)	45.14	23.41	2.41	43.08	22.39	2.63	40.87	21.35	2.87	38.60	20.31	3.13	36.21	19.27	3.42	33.67	18.21	3.75
1350	57 (13.9)	38.32	38.32	2.35	36.83	36.83	2.57	35.27	35.27	2.81	33.62	33.62	3.08	31.85	31.85	3.37	29.99	29.99	3.70
	62 (16.7)	38.43	38.13	2.35	36.88	36.88	2.57	35.32	35.32	2.81	33.66	33.66	3.08	31.88	31.88	3.37	30.03	30.03	3.70
	63 (17.2)††	38.73	29.56	2.35	36.87	28.44	2.57	34.94	27.32	2.81	32.94	26.19	3.07	30.84	25.05	3.36	28.64	23.89	3.68
	67 (19.4)	41.73	30.84	2.38	39.74	29.71	2.60	37.67	28.58	2.84	35.54	27.44	3.10	33.29	26.29	3.39	30.89	25.11	3.71
	72 (22.2)	45.89	24.52	2.43	43.73	23.47	2.65	41.48	22.42	2.89	39.13	21.36	3.15	36.66	20.29	3.44	34.06	19.21	3.76

See notes on page 26

DETAILED COOLING CAPACITIES# (CONTINUED)

24ACB636 Outdoor Section With CNPVP4821 Indoor Section

Cooling Indoor Model	High Speed Cap.	Power	Low Speed Cap.	Power	Furnace Model
*CNPV*4821A**	1.00	1.00	1.00	1.00	58PH*090–16
CAP**3614A**	0.95	1.06	0.94	1.11	
CAP**3617A**	0.95	1.06	0.94	1.11	
CAP**3621A**	0.95	1.06	0.94	1.11	
CAP**4221A**	0.96	1.06	0.95	1.11	
CAP**4224A**	0.96	1.06	0.95	1.11	
CAP**4817A**	0.98	1.07	0.97	1.11	
CAP**4821A**	0.97	1.07	0.96	1.11	
CAP**4824A**	0.97	1.07	0.96	1.11	
CNPH*3617A**	0.95	1.06	0.94	1.12	
CNPH*4221A**	0.96	1.07	0.95	1.11	
CNPH*4821A**	0.98	1.07	0.96	1.11	
CNPV*3617A**	0.95	1.06	0.94	1.12	
CNPV*3621A**	0.95	1.06	0.94	1.12	
CNPV*3717A**	0.99	1.07	0.97	1.11	
CNPV*4217A**	0.97	1.06	0.95	1.11	
CNPV*4221A**	0.96	1.07	0.95	1.11	
CNPV*4321A**	0.99	1.07	0.97	1.11	
CNPV*4821A**	0.98	1.07	0.96	1.11	
CNPV*4824A**	0.98	1.07	0.96	1.11	
CSPH*3612A**	0.98	1.07	0.96	1.11	
CSPH*4212A**	0.99	1.08	0.97	1.11	
CSPH*4812A**	1.00	1.08	0.97	1.11	
FV4CN(B,F)003	0.97	0.99	0.96	0.95	
FV4CN(B,F)005	1.01	0.99	0.99	0.95	
FV4CNB006	1.02	0.98	0.99	0.93	
CAP**3614A**	0.96	1.02	0.95	1.00	58CV(A,X)070–12
CNPH*4221A**	0.97	1.01	0.97	1.00	58CV(A,X)070–12
CSPH*3612A**	0.99	1.03	0.97	1.00	58CV(A,X)070–12
CSPH*4212A**	1.00	1.02	0.98	0.99	58CV(A,X)070–12
CSPH*4812A**	1.01	1.03	0.99	1.00	58CV(A,X)070–12
CAP**3617A**	0.96	0.99	0.96	0.98	58CV(A,X)090–16
CAP**4817A**	0.99	1.00	0.98	0.96	58CV(A,X)090–16
CNPH*3617A**	0.96	0.99	0.95	0.98	58CV(A,X)090–16
CNPH*4221A**	0.97	1.00	0.97	0.98	58CV(A,X)090–16
CNPH*4821A**	0.99	1.00	0.98	0.96	58CV(A,X)090–16
CNPV*3617A**	0.96	0.99	0.95	0.98	58CV(A,X)090–16
CNPV*3717A**	1.00	1.00	0.99	0.97	58CV(A,X)090–16
CNPV*4217A**	0.98	1.00	0.97	0.97	58CV(A,X)090–16
CNPV*4821A**	1.01	1.01	0.98	0.96	58CV(A,X)090–16
CSPH*3612A**	1.00	1.02	0.98	0.98	58CV(A,X)090–16
CSPH*4212A**	1.01	1.01	0.98	0.97	58CV(A,X)090–16
CSPH*4812A**	1.01	1.02	0.99	0.97	58CV(A,X)090–16
CAP**3621A**	0.97	1.00	0.96	0.97	58CV(A,X)110–20
CAP**4221A**	0.97	1.00	0.97	0.97	58CV(A,X)110–20
CAP**4821A**	0.99	1.00	0.98	0.97	58CV(A,X)110–20
CNPH*4221A**	0.97	1.00	0.97	0.98	58CV(A,X)110–20
CNPH*4821A**	0.99	1.00	0.98	0.96	58CV(A,X)110–20
CNPV*3621A**	0.96	1.00	0.96	0.99	58CV(A,X)110–20
CNPV*4321A**	1.01	1.01	0.99	0.97	58CV(A,X)110–20
CNPV*4821A**	0.99	1.00	0.98	0.96	58CV(A,X)110–20
CSPH*3612A**	1.00	1.02	0.98	0.98	58CV(A,X)110–20
CSPH*4212A**	1.01	1.02	0.99	0.98	58CV(A,X)110–20
CSPH*4812A**	1.01	1.02	0.99	0.97	58CV(A,X)110–20
CAP**4224A**	0.97	0.99	0.97	0.96	58CV(A,X)135–22

Cooling Indoor Model	High Speed Cap.	Power	Low Speed Cap.	Power	Furnace Model
CAP**4824A**	0.99	0.99	0.98	0.96	58CV(A,X)135–22
CNPH*4221A**	0.97	1.00	0.97	0.97	58CV(A,X)135–22
CNPH*4821A**	0.99	0.99	0.98	0.96	58CV(A,X)135–22
CNPV*4824A**	0.99	0.99	0.98	0.96	58CV(A,X)135–22
CSPH*3612A**	1.00	1.01	0.98	0.97	58CV(A,X)135–22
CSPH*4212A**	1.01	1.01	0.99	0.97	58CV(A,X)135–22
CSPH*4812A**	1.01	1.01	0.99	0.96	58CV(A,X)135–22
CAP**4224A**	0.97	0.97	0.97	0.95	58CV(A,X)155–22
CAP**4824A**	0.99	0.98	0.98	0.95	58CV(A,X)155–22
CNPH*3617A**	0.96	0.99	0.96	0.98	58CV(A,X)155–22
CNPH*4221A**	0.97	0.99	0.97	0.96	58CV(A,X)155–22
CNPH*4821A**	0.99	0.98	0.99	0.95	58CV(A,X)155–22
CNPV*4824A**	0.99	0.98	0.99	0.95	58CV(A,X)155–22
CSPH*3612A**	1.01	1.01	0.98	0.97	58CV(A,X)155–22
CSPH*4212A**	1.01	1.00	0.99	0.96	58CV(A,X)155–22
CSPH*4812A**	1.02	1.01	0.99	0.96	58CV(A,X)155–22
CSPH*3612A**	1.01	1.06	0.96	0.98	58HDV060––12
CSPH*4212A**	1.01	1.06	0.97	0.98	58HDV060––12
CSPH*4812A**	1.02	1.06	0.97	0.98	58HDV060––12
CNPH*3617A**	0.97	1.04	0.97	1.00	58HDV080––20
CNPH*4221A**	0.99	1.04	0.98	1.00	58HDV080––20
CNPH*4821A**	1.01	1.03	1.00	0.99	58HDV080––20
CAP**4224A**	0.98	1.01	0.98	0.98	58HDV100––20
CNPH*3617A**	0.97	1.01	0.96	0.99	58HDV100––20
CNPH*4821A**	1.01	1.02	0.99	0.98	58HDV100––20
CAP**3617A**	0.98	1.02	0.97	1.00	58MEB060–12
CAP**4817A**	1.02	1.04	1.01	1.00	58MEB060–12
CNPH*3617A**	0.98	1.02	0.97	1.01	58MEB060–12
CNPH*4221A**	0.99	1.03	0.99	1.00	58MEB060–12
CNPH*4821A**	1.02	1.02	1.01	1.00	58MEB060–12
CNPV*3617A**	0.98	1.02	0.97	1.01	58MEB060–12
CNPV*3717A**	1.03	1.04	1.01	1.00	58MEB060–12
CNPV*4217A**	1.01	1.03	0.99	1.00	58MEB060–12
CNPV*4821A**	1.02	1.02	0.98	0.95	58MEB060–12
CSPH*3612A**	1.01	1.03	0.97	0.96	58MEB060–12
CSPH*4212A**	1.02	1.02	0.98	0.96	58MEB060–12
CSPH*4812A**	1.02	1.03	0.99	0.96	58MEB060–12
CAP**3617A**	0.98	1.02	0.97	0.99	58MEB080–12
CAP**4817A**	1.02	1.02	1.00	0.99	58MEB080–12
CNPH*3617A**	0.98	1.02	0.97	1.00	58MEB080–12
CNPH*4221A**	0.99	1.03	0.98	0.99	58MEB080–12
CNPH*4821A**	1.02	1.02	1.00	0.99	58MEB080–12
CNPV*3617A**	0.98	1.02	0.97	1.00	58MEB080–12
CNPV*3717A**	1.02	1.02	1.01	0.99	58MEB080–12
CNPV*4217A**	1.00	1.02	0.99	0.99	58MEB080–12
CSPH*3612A**	1.01	1.02	0.99	0.99	58MEB080–12
CSPH*4212A**	1.02	1.02	0.97	0.96	58MEB080–12
CSPH*4812A**	1.02	1.03	1.01	0.99	58MEB080–12
CAP**3617A**	0.98	1.02	0.98	1.02	58MEB080–16
CAP**4817A**	1.02	1.04	1.01	1.01	58MEB080–16
CNPH*3617A**	0.98	1.02	0.97	1.02	58MEB080–16
CNPH*4221A**	0.99	1.03	0.99	1.01	58MEB080–16
CNPH*4821A**	1.02	1.02	1.01	1.01	58MEB080–16
CNPV*3617A**	0.98	1.02	0.97	1.02	58MEB080–16
CNPV*3717A**	1.03	1.04	1.01	1.01	58MEB080–16

Cooling Indoor Model	High Speed Cap.	Power	Low Speed Cap.	Power	Furnace Model
CNPV*4217A**	1.01	1.03	0.99	1.01	58MEB080–16
CNPV*4821A**	1.01	1.03	1.01	1.01	58MEB080–16
CSPH*3612A**	1.01	1.03	1.00	1.01	58MEB080–16
CSPH*4212A**	1.02	1.03	1.01	1.01	58MEB080–16
CSPH*4812A**	1.02	1.03	1.01	1.01	58MEB080–16
CAP**3617A**	0.97	1.01	0.97	0.99	58MV(B,C)060–14
CAP**4817A**	1.00	1.02	0.99	0.98	58MV(B,C)060–14
CNPH*3617A**	0.96	1.01	0.96	0.99	58MV(B,C)060–14
CNPH*4221A**	0.98	1.01	0.97	0.99	58MV(B,C)060–14
CNPV*3617A**	0.96	1.01	0.96	0.99	58MV(B,C)060–14
CNPV*3717A**	1.01	1.01	1.00	0.98	58MV(B,C)060–14
CNPV*4217A**	0.98	1.01	0.98	0.98	58MV(B,C)060–14
CAP**4821A**	0.98	1.01	0.97	0.98	58MV(B,C)080–14
CNPH*3617A**	0.96	1.02	0.95	0.99	58MV(B,C)080–14
CNPH*4221A**	0.97	1.02	0.96	0.98	58MV(B,C)080–14
CNPV*3621A**	0.96	1.02	0.95	0.99	58MV(B,C)080–14
CNPV*4221A**	0.97	1.02	0.96	0.98	58MV(B,C)080–14
CNPV*4321A**	1.02	1.03	0.99	0.97	58MV(B,C)080–14
CNPV*4821A**	1.01	1.03	0.97	0.97	58MV(B,C)080–14
CNPV*4824A**	1.01	1.03	0.97	0.97	58MV(B,C)080–14
CSPH*4212A**	1.01	1.03	0.98	0.98	58MV(B,C)080–14
CSPH*4812A**	1.01	1.03	0.98	0.98	58MV(B,C)080–14
CAP**3621A**	0.96	1.00	0.96	0.98	58MV(B,C)080–20
CAP**4221A**	0.97	1.00	0.97	0.98	58MV(B,C)080–20
CAP**4821A**	0.98	1.01	0.97	0.98	58MV(B,C)080–20
CNPH*3617A**	0.96	1.01	0.95	0.99	58MV(B,C)080–20
CNPH*4221A**	0.97	1.01	0.97	0.99	58MV(B,C)080–20
CNPH*4821A**	0.99	1.00	0.98	0.98	58MV(B,C)080–20
CNPV*3621A**	0.96	1.01	0.95	0.99	58MV(B,C)080–20
CNPV*4221A**	0.97	1.01	0.97	0.99	58MV(B,C)080–20
CNPV*4321A**	1.00	1.01	0.99	0.98	58MV(B,C)080–20
CNPV*4821A**	0.99	1.00	0.98	0.98	58MV(B,C)080–20
CNPV*4824A**	1.00	1.02	0.98	0.98	58MV(B,C)080–20
CSPH*3612A**	1.00	1.02	0.98	0.99	58MV(B,C)080–20
CSPH*4212A**	1.01	1.02	0.98	0.98	58MV(B,C)080–20
CSPH*4812A**	1.01	1.03	0.99	0.98	58MV(B,C)080–20
CAP**3621A**	0.97	1.00	0.95	0.98	58MV(B,C)100–20
CAP**4221A**	0.97	1.00	0.95	0.97	58MV(B,C)100–20
CAP**4821A**	0.99	1.00	0.97	0.97	58MV(B,C)100–20
CNPH*3617A**	0.96	1.01	0.95	0.98	58MV(B,C)100–20
CNPH*4221A**	0.97	1.00	0.95	0.98	58MV(B,C)100–20
CNPH*4821A**	0.99	1.00	0.97	0.97	58MV(B,C)100–20
CNPV*3621A**	0.96	1.01	0.95	0.98	58MV(B,C)100–20
CNPV*4221A**	0.97	1.00	0.95	0.98	58MV(B,C)100–20
CNPV*4321A**	1.01	1.01	0.98	0.97	58MV(B,C)100–20
CNPV*4821A**	0.99	1.00	0.97	0.97	58MV(B,C)100–20
CNPV*4824A**	1.01	1.01	0.97	0.97	58MV(B,C)100–20
CSPH*3612A**	1.01	1.03	0.97	0.98	58MV(B,C)100–20
CSPH*4212A**	1.01	1.03	0.97	0.98	58MV(B,C)100–20
CSPH*4812A**	1.02	1.02	0.98	0.98	58MV(B,C)100–20
CAP**4224A**	0.97	0.99	0.97	0.97	58MV(B,C)120–20
CAP**4824A**	0.99	1.00	0.98	0.97	58MV(B,C)120–20
CNPH*3617A**	0.96	1.00	0.96	0.98	58MV(B,C)120–20
CNPH*4821A**	0.99	1.00	0.98	0.96	58MV(B,C)120–20
CNPV*4824A**	0.99	1.00	0.98	0.96	58MV(B,C)120–20

DETAILED COOLING CAPACITIES# (CONTINUED)

24ACB636 Outdoor Section With CNPVP4821 Indoor Section

Cooling Indoor Model	High Speed Cap.	Power	Low Speed Cap.	Power	Furnace Model
CSPH*3612A**	1.00	1.02	0.98	0.98	58MV(B,C)120–20
CSPH*4212A**	1.01	1.01	0.99	0.97	58MV(B,C)120–20
CSPH*4812A**	1.01	1.01	0.99	0.97	58MV(B,C)120–20
CNPH*4821A**	0.98	1.01	0.98	0.99	58MVB040–14
CAP**3621A**	0.97	1.00	0.97	1.00	58PH*090–16
CAP**4221A**	0.98	0.99	0.98	1.00	58PH*090–16
CNPH*3617A**	0.96	1.00	0.97	1.01	58PH*090–16
CNPH*4221A**	0.98	1.00	0.98	1.01	58PH*090–16
CNPV*3621A**	0.97	1.00	0.97	1.01	58PH*090–16
CSPH*3612A**	0.99	1.00	0.98	0.99	58PH*090–16
CSPH*4212A**	1.02	1.02	1.00	1.00	58PH*090–16
CSPH*4812A**	1.02	1.02	1.01	1.01	58PH*090–16

See notes on page 26

DETAILED COOLING CAPACITIES# (CONTINUED)

EVAPORATOR AIR		CONDENSER ENTERING AIR TEMPERATURES °F (°C)																	
		75 (23.9)			85 (29.4)			95 (35)			105 (40.6)			115 (46.1)			125 (51.7)		
CFM	EWB °F (°C)	Capacity MBtuh		Total System KW**	Capacity MBtuh		Total System KW**	Capacity MBtuh		Total System KW**	Capacity MBtuh		Total System KW**	Capacity MBtuh		Total System KW**	Capacity MBtuh		Total System KW**
		Total	Sens‡		Total	Sens‡		Total	Sens‡		Total	Sens‡		Total	Sens‡		Total	Sens‡	
24ACB648 LOW Outdoor Section With CNPVP6024 INDOOR SECTION Indoor Section																			
880	57 (13.9)	31.38	31.38	2.02	30.29	30.29	2.27	29.08	29.08	2.55	27.76	27.76	2.87	26.30	26.30	3.24	24.68	24.68	3.66
	62 (16.7)	33.12	26.56	2.01	31.66	25.92	2.26	30.08	25.24	2.55	28.36	24.50	2.87	26.53	23.71	3.23	24.72	24.72	3.66
	63 (17.2)††	33.85	21.87	2.01	32.34	21.23	2.26	30.71	20.54	2.54	28.93	19.81	2.86	27.00	19.02	3.23	24.91	18.19	3.66
	67 (19.4)	36.85	22.81	2.00	35.20	22.16	2.25	33.42	21.47	2.52	31.49	20.72	2.83	29.39	19.93	3.19	27.11	19.08	3.61
	72 (22.2)	41.02	19.01	1.99	39.18	18.35	2.23	37.21	17.65	2.49	35.06	16.89	2.80	32.72	16.09	3.15	30.17	15.23	3.56
1050	57 (13.9)	33.59	33.59	2.04	32.36	32.36	2.29	31.02	31.02	2.56	29.54	29.54	2.88	27.92	27.92	3.24	26.12	26.12	3.66
	62 (16.7)	34.47	29.38	2.03	32.91	28.70	2.28	31.25	27.97	2.56	29.59	29.59	2.88	27.96	27.96	3.24	26.16	26.16	3.66
	63 (17.2)††	35.13	23.80	2.03	33.50	23.14	2.28	31.74	22.42	2.56	29.84	21.66	2.88	27.79	20.85	3.24	25.57	19.99	3.67
	67 (19.4)	38.20	24.89	2.02	36.42	24.20	2.27	34.51	23.48	2.54	32.44	22.71	2.85	30.21	21.89	3.21	27.79	21.02	3.63
	72 (22.2)	42.49	20.35	2.01	40.51	19.66	2.25	38.38	18.93	2.52	35.95	18.11	2.81	33.58	17.32	3.17	30.88	16.43	3.58
1145	57 (13.9)	34.64	34.64	2.05	33.34	33.34	2.30	31.93	31.93	2.57	30.38	30.38	2.88	28.67	28.67	3.24	26.79	26.79	3.66
	62 (16.7)	35.12	30.86	2.05	33.54	30.15	2.30	31.98	31.98	2.57	30.43	30.43	2.88	28.72	28.72	3.24	26.83	26.83	3.66
	63 (17.2)††	35.68	24.83	2.04	33.99	24.15	2.29	32.18	23.43	2.57	30.23	22.66	2.89	28.13	21.83	3.25	25.86	20.95	3.68
	67 (19.4)	38.79	25.98	2.03	36.95	25.29	2.28	34.98	24.56	2.55	32.85	23.78	2.86	30.56	22.95	3.22	28.08	22.06	3.64
	72 (22.2)	43.13	21.04	2.03	41.08	20.35	2.26	38.87	19.60	2.53	36.41	18.78	2.83	33.94	17.97	3.18	31.17	17.07	3.59
1250	57 (13.9)	35.68	35.68	2.06	34.31	34.31	2.31	32.83	32.83	2.58	31.20	31.20	2.89	29.41	29.41	3.25	27.44	27.44	3.66
	62 (16.7)	35.82	32.41	2.06	34.37	34.37	2.31	32.88	32.88	2.58	31.24	31.24	2.89	29.45	29.45	3.25	27.47	27.47	3.66
	63 (17.2)††	36.20	25.93	2.06	34.46	25.24	2.31	32.61	24.51	2.58	30.60	23.72	2.90	28.45	22.88	3.26	26.13	21.98	3.69
	67 (19.4)	39.33	27.16	2.05	37.43	26.46	2.29	35.41	25.72	2.56	33.23	24.93	2.87	30.88	24.08	3.23	28.36	23.17	3.65
	72 (22.2)	43.72	21.79	2.04	41.60	21.07	2.28	39.33	20.32	2.54	36.89	19.52	2.84	34.26	18.66	3.19	31.43	17.76	3.60

EVAPORATOR AIR		CONDENSER ENTERING AIR TEMPERATURES °F (°C)																	
		75 (23.9)			85 (29.4)			95 (35)			105 (40.6)			115 (46.1)			125 (51.7)		
CFM	EWB °F (°C)	Capacity MBtuh		Total System KW**	Capacity MBtuh		Total System KW**	Capacity MBtuh		Total System KW**	Capacity MBtuh		Total System KW**	Capacity MBtuh		Total System KW**	Capacity MBtuh		Total System KW**
		Total	Sens‡		Total	Sens‡		Total	Sens‡		Total	Sens‡		Total	Sens‡		Total	Sens‡	
24ACB648 HIGH Outdoor Section With CNPVP6024 INDOOR SECTION Indoor Section																			
1150	57 (13.9)	41.52	40.66	2.85	39.97	39.74	3.14	38.48	38.48	3.45	36.89	36.89	3.80	35.12	35.12	4.18	33.14	33.14	4.61
	62 (16.7)	45.64	36.21	2.88	43.83	35.28	3.17	41.87	34.29	3.48	39.72	33.22	3.83	37.34	32.05	4.20	34.69	30.78	4.63
	63 (17.2)††	46.63	30.66	2.89	44.78	29.73	3.18	42.78	28.73	3.49	40.57	27.65	3.83	38.13	26.48	4.21	35.42	25.21	4.64
	67 (19.4)	50.50	31.74	2.92	48.50	30.80	3.21	46.32	29.78	3.52	43.91	28.68	3.87	41.25	27.50	4.25	38.30	26.21	4.68
	72 (22.2)	55.85	27.15	2.96	53.61	26.19	3.25	51.19	25.16	3.57	48.51	24.05	3.92	45.55	22.85	4.30	42.28	21.55	4.73
1225	57 (13.9)	44.36	44.36	2.91	42.88	42.88	3.20	41.27	41.27	3.52	39.48	39.48	3.86	37.50	37.50	4.25	35.27	35.27	4.68
	62 (16.7)	47.79	39.70	2.94	45.82	38.73	3.23	43.67	37.68	3.54	41.33	36.56	3.88	38.76	35.33	4.26	35.94	34.00	4.69
	63 (17.2)††	48.81	33.11	2.94	46.77	32.13	3.23	44.57	31.08	3.55	42.15	29.95	3.89	39.50	28.72	4.27	36.57	27.40	4.69
	67 (19.4)	52.81	34.33	2.98	50.60	33.34	3.27	48.19	32.27	3.58	45.56	31.12	3.93	42.68	29.88	4.31	39.49	28.54	4.73
	72 (22.2)	58.33	28.85	3.02	55.85	27.84	3.31	53.10	26.72	3.63	50.27	25.60	3.98	47.07	24.36	4.36	43.54	23.01	4.79
1400	57 (13.9)	45.87	45.87	2.94	44.30	44.30	3.24	42.60	42.60	3.55	40.71	40.71	3.90	38.61	38.61	4.28	36.26	36.26	4.71
	62 (16.7)	48.77	41.55	2.97	46.70	40.55	3.26	44.48	39.49	3.57	42.05	38.33	3.91	39.41	37.08	4.29	36.54	35.69	4.72
	63 (17.2)††	49.76	34.39	2.97	47.65	33.38	3.26	45.35	32.31	3.58	42.84	31.15	3.92	40.08	29.90	4.30	37.06	28.56	4.72
	67 (19.4)	53.82	35.69	3.01	51.47	34.65	3.30	49.00	33.58	3.61	46.27	32.40	3.96	43.28	31.15	4.34	39.99	29.79	4.76
	72 (22.2)	59.41	29.72	3.06	56.84	28.69	3.35	53.78	27.48	3.66	51.03	26.41	4.01	47.70	25.14	4.39	44.07	23.78	4.82
1600	57 (13.9)	47.36	47.36	2.98	45.72	45.72	3.27	43.91	43.91	3.59	41.92	41.92	3.94	39.70	39.70	4.32	37.23	37.23	4.75
	62 (16.7)	49.69	43.53	3.00	47.56	42.51	3.29	45.26	41.41	3.60	42.76	40.22	3.94	40.06	38.91	4.32	37.29	37.29	4.75
	63 (17.2)††	50.67	35.74	3.01	48.46	34.71	3.30	46.08	33.62	3.61	43.47	32.43	3.95	40.62	31.16	4.33	37.50	29.80	4.75
	67 (19.4)	54.77	37.13	3.04	52.35	36.08	3.33	49.77	34.98	3.64	46.94	33.78	3.99	43.83	32.50	4.37	40.45	31.12	4.79
	72 (22.2)	60.43	30.64	3.09	57.74	29.58	3.38	54.85	28.46	3.69	51.71	27.26	4.04	48.29	25.98	4.42	44.54	24.59	4.85

See notes on page 26

DETAILED COOLING CAPACITIES# (CONTINUED)

24ACB648 Outdoor Section With CNPVP6024 INDOOR SECTION Indoor Section

Cooling Indoor Model	High Speed Cap.	Power	Low Speed Cap.	Power	Furnace Model
*CNPH*6124A**	1.00	1.00	1.00	1.00	58MV(B,C)100–20
CAP**4817A**	0.95	1.04	0.95	1.07	
CAP**4821A**	0.96	1.06	0.94	1.07	
CAP**4824A**	0.94	1.03	0.94	1.07	
CAP**6021A**	0.96	1.03	0.95	1.07	
CNPH*4821A**	0.94	1.03	0.94	1.07	
CNPH*6024A**	0.96	1.04	0.95	1.07	
CNPV*4821A**	0.94	1.03	0.94	1.07	
CNPV*4824A**	0.94	1.03	0.94	1.07	
CNPV*6024A**	0.96	1.04	0.95	1.07	
CNPV*6124A**	0.97	1.03	0.96	1.07	
CSPH*4812A**	0.95	1.03	0.95	1.07	
CSPH*6012A**	0.97	1.04	0.96	1.08	
FV4CN(B,F)005	0.97	0.98	0.98	0.95	
FV4CNB006	0.99	0.98	0.99	0.93	
CAP**4817A**	0.95	1.00	0.94	0.95	58CV(A,X)090–16
CSPH*4812A**	0.95	1.00	0.95	0.95	58CV(A,X)090–16
CSPH*6012A**	0.97	1.00	0.96	0.95	58CV(A,X)090–16
CAP**4824A**	0.95	1.00	0.94	0.95	58CV(A,X)110–20
CAP**6021A**	0.97	1.00	0.95	0.95	58CV(A,X)110–20
CAP**6024A**	0.97	1.00	0.95	0.95	58CV(A,X)110–20
CNPH*4821A**	0.95	1.00	0.94	0.94	58CV(A,X)110–20
CNPH*6124A**	1.00	0.98	1.00	0.99	58CV(A,X)110–20
CNPV*4821A**	0.95	1.00	0.94	0.94	58CV(A,X)110–20
CNPV*4824A**	0.95	1.00	0.94	0.94	58CV(A,X)110–20
CNPV*6024A**	0.97	0.99	0.95	0.94	58CV(A,X)110–20
CNPV*6124A**	1.01	0.97	1.01	0.98	58CV(A,X)110–20
CSPH*4812A**	0.95	1.00	0.95	0.95	58CV(A,X)110–20
CSPH*6012A**	0.97	0.99	0.96	0.95	58CV(A,X)110–20
CAP**4824A**	0.95	0.98	0.94	0.93	58CV(A,X)135–22
CAP**6024A**	0.97	0.98	0.95	0.93	58CV(A,X)135–22
CNPH*6024A**	0.97	0.98	0.96	0.94	58CV(A,X)135–22
CNPH*6124A**	1.01	0.98	1.00	0.98	58CV(A,X)135–22
CNPV*4824A**	0.95	0.98	0.94	0.93	58CV(A,X)135–22
CNPV*6024A**	0.97	0.98	0.95	0.93	58CV(A,X)135–22
CNPV*6124A**	1.01	0.97	1.01	0.97	58CV(A,X)135–22
CSPH*4812A**	0.96	0.99	0.95	0.94	58CV(A,X)135–22
CSPH*6012A**	0.97	0.98	0.96	0.93	58CV(A,X)135–22
CAP**6024A**	0.97	0.98	0.95	0.92	58CV(A,X)155–22
CNPH*6024A**	0.97	0.97	0.96	0.93	58CV(A,X)155–22
CNPV*4824A**	0.95	0.97	0.95	0.93	58CV(A,X)155–22
CNPV*6024A**	0.97	0.97	0.95	0.92	58CV(A,X)155–22
CNPV*6124A**	1.02	0.98	1.01	0.96	58CV(A,X)155–22
CSPH*6012A**	0.98	0.98	0.96	0.92	58CV(A,X)155–22
CNPH*4821A**	0.96	1.03	0.96	0.99	58HDV080––20
CNPV*4824A**	0.96	1.03	0.96	0.99	58HDV080––20
CSPH*4812A**	0.96	1.03	0.98	1.00	58HDV080––20

Cooling Indoor Model	High Speed Cap.	Power	Low Speed Cap.	Power	Furnace Model
CSPH*6012A**	0.98	1.03	0.99	0.99	58HDV080––20
CNPH*4821A**	0.95	1.01	0.96	0.98	58HDV100––20
CNPH*6024A**	0.97	1.02	0.98	0.98	58HDV100––20
CNPH*6124A**	0.98	1.02	0.98	0.98	58HDV100––20
CNPV*4824A**	0.95	1.01	0.96	0.98	58HDV100––20
CNPV*6024A**	0.97	1.02	0.98	0.98	58HDV100––20
CNPV*6124A**	0.99	1.02	0.99	0.97	58HDV100––20
CSPH*4812A**	0.96	1.01	0.96	0.98	58HDV100––20
CSPH*6012A**	0.98	1.02	0.98	0.97	58HDV100––20
CAP**4821A**	0.95	1.02	0.95	0.97	58MEB080–16
CNPH*4821A**	0.95	1.01	0.94	0.94	58MEB080–16
CNPH*6024A**	0.97	1.02	0.96	0.96	58MEB080–16
CNPH*6124A**	0.98	1.03	0.95	0.94	58MEB080–16
CNPV*4821A**	0.95	1.01	0.96	0.98	58MEB080–16
CSPH*4812A**	0.96	1.02	0.96	0.97	58MEB080–16
CSPH*6012A**	0.98	1.03	0.98	0.97	58MEB080–16
CAP**4821A**	0.95	1.00	0.95	0.95	58MEB100–20
CAP**4824A**	0.95	0.99	0.95	0.94	58MEB100–20
CAP**6024A**	0.97	0.99	0.96	0.94	58MEB100–20
CNPH*4821A**	0.95	0.99	0.95	0.94	58MEB100–20
CNPH*6024A**	0.97	0.99	0.96	0.94	58MEB100–20
CNPH*6124A**	0.98	1.00	0.96	0.94	58MEB100–20
CNPV*4821A**	0.96	1.00	0.95	0.94	58MEB100–20
CNPV*4824A**	0.96	1.00	0.95	0.94	58MEB100–20
CNPV*6024A**	0.97	0.99	0.96	0.94	58MEB100–20
CNPV*6124A**	0.99	1.00	0.98	0.93	58MEB100–20
CSPH*4812A**	0.96	0.99	0.95	0.94	58MEB100–20
CSPH*6012A**	0.98	1.00	0.98	0.94	58MEB100–20
CAP**4821A**	0.95	0.99	0.98	0.99	58MEB120–20
CAP**4824A**	0.96	0.99	0.98	0.98	58MEB120–20
CAP**6024A**	0.98	1.00	0.99	0.98	58MEB120–20
CNPH*4821A**	0.96	0.99	0.98	0.98	58MEB120–20
CNPH*6024A**	0.98	1.00	0.99	0.97	58MEB120–20
CNPH*6124A**	0.98	0.99	0.99	0.97	58MEB120–20
CNPV*4821A**	0.96	0.99	0.98	0.98	58MEB120–20
CNPV*4824A**	0.96	0.99	0.98	0.98	58MEB120–20
CNPV*4824A**	0.96	0.99	0.98	0.98	58MEB120–20
CNPV*6024A**	0.98	0.99	0.99	0.97	58MEB120–20
CNPV*6124A**	0.99	0.99	1.00	0.97	58MEB120–20
CSPH*4812A**	0.96	0.98	0.99	0.99	58MEB120–20
CSPH*6012A**	0.98	0.99	1.00	0.98	58MEB120–20
CAP**4817A**	0.95	1.02	0.94	0.96	58MV(B,C)080–20
CAP**4821A**	0.94	1.01	0.94	0.97	58MV(B,C)080–20
CAP**6021A**	0.96	1.01	0.95	0.96	58MV(B,C)080–20
CNPH*4821A**	0.94	1.00	0.94	0.96	58MV(B,C)080–20
CNPH*6024A**	0.96	1.00	0.95	0.96	58MV(B,C)080–20
CNPV*4821A**	0.94	1.00	0.94	0.96	58MV(B,C)080–20
CNPV*6024A**	0.96	1.01	0.95	0.96	58MV(B,C)080–20

Cooling Indoor Model	High Speed Cap.	Power	Low Speed Cap.	Power	Furnace Model
CSPH*6012A**	0.96	1.00	0.95	0.95	58MV(B,C)080–20
CAP**4821A**	0.94	1.02	0.94	0.96	58MV(B,C)100–20
CAP**6021A**	0.97	1.02	0.95	0.96	58MV(B,C)100–20
CNPH*4821A**	0.95	1.01	0.95	0.96	58MV(B,C)100–20
CNPH*6024A**	0.97	1.02	0.95	0.95	58MV(B,C)100–20
CNPV*4821A**	0.95	1.01	0.95	0.96	58MV(B,C)100–20
CNPV*6024A**	0.97	1.02	0.95	0.95	58MV(B,C)100–20
CNPV*6124A**	1.01	0.99	1.01	0.99	58MV(B,C)100–20
CSPH*6012A**	0.97	1.02	0.96	0.96	58MV(B,C)100–20
CAP**4824A**	0.95	1.00	0.94	0.94	58MV(B,C)120–20
CAP**6024A**	0.97	1.00	0.95	0.94	58MV(B,C)120–20
CNPH*6024A**	0.97	1.00	0.95	0.94	58MV(B,C)120–20
CNPH*6124A**	1.00	0.99	1.00	0.99	58MV(B,C)120–20
CNPV*6024A**	0.97	1.00	0.95	0.94	58MV(B,C)120–20
CNPV*6124A**	1.01	0.98	1.01	0.98	58MV(B,C)120–20
CSPH*6012A**	0.97	0.99	0.96	0.94	58MV(B,C)120–20
CAP**4817A**	0.96	1.01	0.96	0.97	58PH*090–16
CAP**4824A**	0.95	1.00	0.95	0.95	58PH*090–16
CAP**6021A**	0.97	1.00	0.96	0.96	58PH*090–16
CNPH*4821A**	0.95	1.00	0.96	0.96	58PH*090–16
CNPH*6124A**	0.98	1.01	0.98	0.96	58PH*090–16
CNPV*6124A**	0.99	1.01	0.99	0.96	58PH*090–16
CSPH*4812A**	0.96	1.01	0.96	0.96	58PH*090–16
CSPH*6012A**	0.98	1.00	0.98	0.95	58PH*090–16
CAP**4821A**	0.95	0.99	0.95	0.95	58PH*110–20
CAP**4824A**	0.95	0.98	0.96	0.96	58PH*110–20
CAP**6021A**	0.97	0.98	0.96	0.95	58PH*110–20
CAP**6024A**	0.97	0.98	0.98	0.96	58PH*110–20
CNPH*4821A**	0.96	0.99	0.96	0.96	58PH*110–20
CNPH*6024A**	0.97	0.98	0.98	0.96	58PH*110–20
CNPH*6124A**	0.98	0.99	0.98	0.96	58PH*110–20
CNPV*4821A**	0.95	0.98	0.96	0.96	58PH*110–20
CNPV*4824A**	0.96	0.99	0.96	0.96	58PH*110–20
CNPV*6024A**	0.97	0.98	0.98	0.96	58PH*110–20
CNPV*6024A**	0.97	0.98	0.98	0.96	58PH*110–20
CNPV*6124A**	0.99	0.99	0.99	0.95	58PH*110–20
CSPH*4812A**	0.96	0.98	0.96	0.96	58PH*110–20
CSPH*6012A**	0.98	0.99	0.98	0.95	58PH*110–20
CAP**6021A**	0.97	0.99	0.98	0.99	58PH*135–20
CAP**6024A**	0.97	0.99	0.98	0.98	58PH*135–20
CNPH*6024A**	0.97	0.99	0.99	0.99	58PH*135–20
CNPH*6124A**	0.98	1.00	0.99	0.99	58PH*135–20
CNPV*4824A**	0.95	0.99	0.98	0.99	58PH*135–20
CNPV*6024A**	0.97	0.99	0.99	0.99	58PH*135–20
CNPV*6124A**	0.99	1.00	1.00	0.99	58PH*135–20
CSPH*4812A**	0.96	1.00	0.98	0.99	58PH*135–20
CSPH*6012A**	0.98	1.00	0.99	0.98	58PH*135–20

See notes on page 26

DETAILED COOLING CAPACITIES# (CONTINUED)

EVAPORATOR AIR		CONDENSER ENTERING AIR TEMPERATURES °F (°C)																	
		75 (23.9)			85 (29.4)			95 (35)			105 (40.6)			115 (46.1)			125 (51.7)		
CFM	EWB °F (°C)	Capacity MBtuh		Total System KW**	Capacity MBtuh		Total System KW**	Capacity MBtuh		Total System KW**	Capacity MBtuh		Total System KW**	Capacity MBtuh		Total System KW**	Capacity MBtuh		Total System KW**
		Total	Sens‡		Total	Sens‡		Total	Sens‡		Total	Sens‡		Total	Sens‡		Total	Sens‡	
24ACB660–LOW Outdoor Section With CNPHP6124 Indoor Section																			
1100	57 (13.9)	49.86	23.91	2.40	47.66	23.10	2.70	45.29	22.25	3.03	42.73	21.34	3.41	39.96	20.38	3.85	36.97	19.36	4.36
	62 (16.7)	44.89	28.95	2.41	42.92	28.16	2.72	40.78	27.32	3.06	38.45	26.41	3.45	35.95	25.45	3.90	33.27	24.43	4.42
	63 (17.2)††	41.27	27.74	2.43	39.43	26.95	2.74	37.48	26.12	3.09	35.35	25.23	3.48	33.05	24.28	3.94	30.59	23.28	4.47
	67 (19.4)	40.39	33.88	2.43	38.64	33.10	2.74	36.73	32.25	3.09	34.69	31.33	3.49	32.55	32.36	3.95	30.57	30.57	4.47
	72 (22.2)	38.60	38.60	2.44	37.27	37.27	2.75	35.79	35.79	3.10	34.18	34.18	3.49	32.43	32.43	3.95	30.51	30.51	4.47
1250	57 (13.9)	51.05	25.10	2.43	48.73	24.28	2.72	46.25	23.41	3.05	43.54	22.47	3.43	40.66	21.49	3.87	37.55	20.44	4.38
	62 (16.7)	46.00	30.83	2.44	43.91	30.02	2.74	41.67	29.15	3.08	39.23	28.22	3.47	36.62	27.24	3.91	33.83	26.20	4.44
	63 (17.2)††	42.33	29.50	2.45	40.40	28.69	2.76	38.35	27.84	3.11	36.05	26.90	3.50	33.72	25.95	3.96	31.15	24.92	4.49
	67 (19.4)	41.54	36.44	2.45	39.68	35.60	2.76	37.75	34.70	3.11	35.78	35.78	3.50	33.89	33.89	3.95	31.81	31.81	4.47
	72 (22.2)	40.50	40.50	2.46	39.05	39.05	2.77	37.46	37.46	3.11	35.73	35.73	3.50	33.84	33.84	3.95	31.76	31.76	4.47
1400	57 (13.9)	51.99	26.23	2.45	49.57	25.39	2.75	46.98	24.50	3.08	44.19	23.56	3.45	41.20	22.55	3.89	37.99	21.49	4.40
	62 (16.7)	46.87	32.63	2.46	44.69	31.80	2.76	42.36	30.92	3.10	39.84	29.97	3.49	37.15	28.97	3.93	34.27	27.90	4.45
	63 (17.2)††	43.18	31.19	2.47	41.18	30.37	2.78	39.04	29.50	3.13	36.72	28.56	3.52	34.24	27.56	3.98	31.59	26.49	4.51
	67 (19.4)	42.54	38.84	2.48	40.71	40.48	2.78	38.96	38.96	3.13	37.09	37.09	3.51	35.06	35.06	3.96	32.84	32.84	4.48
	72 (22.2)	42.13	42.13	2.48	40.58	40.58	2.78	38.89	38.89	3.13	37.02	37.02	3.51	35.01	35.01	3.96	32.80	32.80	4.48
1500	57 (13.9)	52.50	26.95	2.47	50.03	26.11	2.76	47.39	25.21	3.09	44.54	24.25	3.47	41.49	23.24	3.90	38.22	22.17	4.41
	62 (16.7)	47.35	33.80	2.48	45.12	32.96	2.78	42.74	32.06	3.12	40.18	31.10	3.50	37.44	30.08	3.95	34.52	28.99	4.47
	63 (17.2)††	43.66	32.29	2.49	41.61	31.45	2.80	39.42	30.56	3.14	37.05	29.60	3.53	34.53	28.59	3.99	31.85	27.50	4.52
	67 (19.4)	43.23	43.01	2.49	41.55	41.55	2.80	39.79	39.79	3.14	37.85	37.85	3.52	35.74	35.74	3.97	33.45	33.45	4.48
	72 (22.2)	43.11	43.11	2.49	41.49	41.49	2.80	39.73	39.73	3.14	37.79	37.79	3.52	35.69	35.69	3.97	33.40	33.40	4.48

EVAPORATOR AIR		CONDENSER ENTERING AIR TEMPERATURES °F (°C)																	
		75 (23.9)			85 (29.4)			95 (35)			105 (40.6)			115 (46.1)			125 (51.7)		
CFM	EWB °F (°C)	Capacity MBtuh		Total System KW**	Capacity MBtuh		Total System KW**	Capacity MBtuh		Total System KW**	Capacity MBtuh		Total System KW**	Capacity MBtuh		Total System KW**	Capacity MBtuh		Total System KW**
		Total	Sens‡		Total	Sens‡		Total	Sens‡		Total	Sens‡		Total	Sens‡		Total	Sens‡	
24ACB660A30–HIGH Outdoor Section With CNPHP6124 Indoor Section																			
1500	57 (13.9)	54.27	54.27	3.61	52.74	52.74	3.98	50.95	50.95	4.38	49.05	49.05	4.82	46.81	46.81	5.30	44.25	44.25	5.83
	62 (16.7)	57.18	48.11	3.64	55.08	47.35	4.01	52.75	46.48	4.40	50.22	45.51	4.83	47.39	44.39	5.31	44.31	44.31	5.84
	63 (17.2)††	58.34	39.49	3.65	56.17	38.66	4.02	53.77	37.73	4.41	50.96	36.64	4.84	48.16	35.56	5.32	44.84	34.30	5.84
	67 (19.4)	63.05	41.02	3.70	60.68	40.18	4.07	58.06	39.24	4.47	55.17	38.22	4.90	51.93	37.06	5.38	48.34	35.79	5.90
	72 (22.2)	69.52	33.78	3.78	66.88	32.88	4.15	63.98	31.88	4.55	60.75	30.78	4.98	57.17	29.57	5.46	53.18	28.23	5.99
1710	57 (13.9)	56.76	56.76	3.70	55.08	55.08	4.07	53.17	53.17	4.47	51.02	51.02	4.91	48.63	48.63	5.40	45.87	45.87	5.93
	62 (16.7)	58.63	51.57	3.72	56.42	50.77	4.09	54.01	49.87	4.48	51.39	48.81	4.92	48.70	48.70	5.40	45.93	45.93	5.93
	63 (17.2)††	59.71	41.82	3.73	57.41	40.98	4.10	54.85	40.03	4.49	52.06	38.99	4.93	48.95	37.84	5.40	45.51	36.55	5.92
	67 (19.4)	64.47	43.51	3.79	61.97	42.66	4.16	59.19	41.71	4.55	56.13	40.67	4.98	52.75	39.51	5.46	48.99	38.22	5.98
	72 (22.2)	71.04	35.32	3.87	68.25	34.40	4.23	65.17	33.38	4.63	61.79	32.27	5.07	58.01	31.02	5.54	53.89	29.69	6.07
1835	57 (13.9)	58.06	58.06	3.76	56.29	56.29	4.13	54.30	54.30	4.53	52.08	52.08	4.97	49.55	49.55	5.45	46.68	46.68	5.98
	62 (16.7)	59.38	53.53	3.77	57.14	52.72	4.14	54.70	51.76	4.53	52.14	52.14	4.97	49.58	49.58	5.45	46.74	46.74	5.98
	63 (17.2)††	60.37	43.15	3.78	58.00	42.29	4.15	55.37	41.34	4.54	52.51	40.30	4.97	49.24	39.10	5.44	45.83	37.85	5.96
	67 (19.4)	65.16	44.93	3.84	62.57	44.07	4.20	59.71	43.12	4.60	56.59	42.08	5.03	53.13	40.91	5.50	49.31	39.62	6.03
	72 (22.2)	71.76	36.19	3.92	68.89	35.26	4.28	65.74	34.24	4.68	62.28	33.12	5.11	58.42	31.86	5.59	54.21	30.52	6.11
2000	57 (13.9)	59.59	59.59	3.83	57.72	57.72	4.20	55.62	55.62	4.60	53.28	53.28	5.04	50.62	50.62	5.52	47.63	47.63	6.05
	62 (16.7)	60.30	55.99	3.83	58.01	55.08	4.20	55.69	55.69	4.60	53.35	53.35	5.04	50.69	50.69	5.52	47.68	47.68	6.05
	63 (17.2)††	61.09	44.84	3.84	58.64	43.97	4.21	55.94	43.02	4.60	53.00	41.98	5.03	49.50	40.70	5.50	46.17	39.50	6.02
	67 (19.4)	65.91	46.75	3.90	63.22	45.88	4.26	60.31	44.93	4.66	57.09	43.89	5.09	53.55	42.72	5.56	49.66	41.41	6.09
	72 (22.2)	72.57	37.29	3.98	69.61	36.36	4.34	66.35	35.32	4.74	62.79	34.19	5.17	58.84	32.94	5.65	54.49	31.56	6.17

See notes on page 26

DETAILED COOLING CAPACITIES# (CONTINUED)

24ACB660 Outdoor Section With CNPHP6124 Indoor Section

Cooling Indoor Model	High Speed Cap.	Power	Low Speed Cap.	Power	Furnace Model
*CNPH*6124A**	1.00	1.00	1.00	1.00	58PH*110–20
CAP**6021A**	0.99	1.02	0.99	1.12	
CAP**6024A**	0.99	1.02	0.99	1.12	
CNPH*6024A**	0.99	1.02	0.99	1.12	
CNPH*6124A**	1.00	1.02	1.00	1.12	
CNPV*6024A**	0.99	1.02	0.99	1.12	
CNPV*6124A**	1.01	1.02	1.01	1.13	
CSPH*6012A**	1.00	1.02	1.00	1.12	
FV4CNB006	1.01	0.98	1.02	1.00	
CAP**6021A**	0.99	1.01	1.00	1.04	58CV(A,X)110–20
CNPH*6024A**	0.99	1.01	1.00	1.03	58CV(A,X)110–20
CNPH*6124A**	0.99	1.01	1.01	1.05	58CV(A,X)110–20
CNPV*6024A**	0.99	1.01	1.00	1.03	58CV(A,X)110–20
CNPV*6124A**	1.00	1.00	1.02	1.03	58CV(A,X)110–20
CSPH*6012A**	0.99	1.00	1.01	1.03	58CV(A,X)110–20
CAP**6024A**	0.99	0.99	1.00	1.02	58CV(A,X)135–22
CNPH*6024A**	0.99	0.99	1.00	1.01	58CV(A,X)135–22
CNPH*6124A**	1.00	1.00	1.01	1.03	58CV(A,X)135–22
CNPV*6024A**	0.99	0.99	1.00	1.01	58CV(A,X)135–22
CNPV*6124A**	1.01	0.99	1.02	1.02	58CV(A,X)135–22
CSPH*6012A**	1.00	0.99	1.01	1.02	58CV(A,X)135–22
CAP**6024A**	1.00	0.99	1.01	1.02	58CV(A,X)155–22
CNPH*6024A**	0.99	0.98	1.01	1.01	58CV(A,X)155–22

Cooling Indoor Model	High Speed Cap.	Power	Low Speed Cap.	Power	Furnace Model
CNPH*6124A**	1.00	0.98	1.01	1.02	58CV(A,X)155–22
CNPV*6024A**	0.99	0.98	1.01	1.01	58CV(A,X)155–22
CNPV*6124A**	1.01	0.99	1.02	1.01	58CV(A,X)155–22
CSPH*6012A**	1.00	0.98	1.01	1.00	58CV(A,X)155–22
CAP**6024A**	0.99	1.04	1.01	1.07	58HDV100––20
CNPH*6124A**	0.99	1.04	1.01	1.06	58HDV100––20
CNPV*6024A**	0.99	1.04	1.01	1.06	58HDV100––20
CNPV*6124A**	1.00	1.03	1.02	1.06	58HDV100––20
CAP**6021A**	0.98	0.99	0.99	1.00	58MEB100–20
CAP**6024A**	0.99	1.00	0.99	1.00	58MEB100–20
CNPH*6024A**	0.99	0.99	1.00	1.01	58MEB100–20
CNPH*6124A**	0.99	0.99	1.00	1.00	58MEB100–20
CNPV*6024A**	0.99	0.99	1.00	1.01	58MEB100–20
CNPV*6124A**	1.00	0.99	1.01	1.00	58MEB100–20
CSPH*6012A**	0.99	0.98	1.00	1.00	58MEB100–20
CAP**6021A**	0.99	0.99	1.00	1.00	58MEB120–20
CAP**6024A**	0.99	0.98	1.00	1.00	58MEB120–20
CNPH*6024A**	0.99	0.99	1.00	1.00	58MEB120–20
CNPH*6124A**	0.99	0.98	1.00	0.99	58MEB120–20
CNPV*6024A**	0.99	0.98	1.00	1.00	58MEB120–20
CNPV*6124A**	0.99	0.99	1.00	0.98	58MEB120–20
CAP**6021A**	0.98	1.06	0.99	1.05	58MV(B,C)080–20
CSPH*6012A**	0.98	1.05	1.00	1.05	58MV(B,C)080–20

Cooling Indoor Model	High Speed Cap.	Power	Low Speed Cap.	Power	Furnace Model
CAP**6021A**	0.98	1.04	1.00	1.08	58MV(B,C)100–20
CNPH*6024A**	0.97	1.03	1.00	1.07	58MV(B,C)100–20
CNPH*6124A**	0.98	1.04	1.01	1.09	58MV(B,C)100–20
CNPV*6024A**	0.97	1.03	1.00	1.07	58MV(B,C)100–20
CNPV*6124A**	0.99	1.03	1.01	1.07	58MV(B,C)100–20
CSPH*6012A**	0.98	1.03	1.01	1.08	58MV(B,C)100–20
CAP**6024A**	0.98	1.01	1.00	1.05	58MV(B,C)120–20
CNPH*6024A**	0.98	1.01	1.00	1.05	58MV(B,C)120–20
CNPH*6124A**	0.99	1.02	1.01	1.06	58MV(B,C)120–20
CNPV*6024A**	0.98	1.01	1.00	1.05	58MV(B,C)120–20
CNPV*6124A**	1.00	1.02	1.01	1.04	58MV(B,C)120–20
CSPH*6012A**	0.99	1.01	1.01	1.05	58MV(B,C)120–20
CAP**6021A**	0.99	0.99	0.99	1.00	58PH*110–20
CNPH*6024A**	0.99	0.99	1.00	1.00	58PH*110–20
CNPV*6024A**	0.99	0.99	1.01	1.03	58PH*110–20
CNPV*6124A**	1.01	0.99	1.03	1.03	58PH*110–20
CSPH*6012A**	1.00	0.99	1.00	0.99	58PH*110–20
CAP**6024A**	0.99	1.00	0.99	1.00	58PH*135–20
CNPH*6024A**	0.99	1.00	1.00	1.01	58PH*135–20
CNPH*6124A**	0.99	1.00	1.00	1.01	58PH*135–20
CNPV*6024A**	0.99	1.00	1.00	1.01	58PH*135–20
CNPV*6124A**	1.00	0.99	1.01	1.00	58PH*135–20
CSPH*6012A**	0.99	0.99	1.00	1.00	58PH*135–20

† Total and sensible capacities are net capacities. Blower motor heat has been subtracted.

‡ Sensible capacities shown are based on 80°F (27°C) entering air at the indoor coil. For sensible capacities at other than 80°F (27°C), deduct 835 Btuh (245 kW) per 1000 CFM (480 L/S) of indoor coil air for each degree below 80°F (27°C), or add 835 Btuh (245 kW) per 1000 CFM (480 L/S) of indoor coil air per degree above 80°F (27°C).

Detailed cooling capacities are based on indoor and outdoor unit at the same elevation per ARI standard 210/240–94. If additional tubing length and/or indoor unit is located above outdoor unit, a slight variation in capacity may occur.

** System kw is total of indoor and outdoor unit kilowatts.

EWB — Entering Wet Bulb

NOTE: When the required data fall between the published data, interpolation may be performed. Extrapolation is not an acceptable practice.

GUIDE SPECIFICATIONS
GENERAL

System Description

Outdoor-mounted, air-cooled, split-system air conditioner unit suitable for ground or rooftop installation. Unit consists of a hermetic compressor, an air-cooled coil, propeller-type condenser fan, and a control box. Unit will discharge supply air upward as shown on contract drawings. Unit will be used in a refrigeration circuit to match up to a packaged fan coil or coil unit.

Quality Assurance

— Unit will be rated in accordance with the latest edition of AHRI Standard 210.

— Unit will be certified for capacity and efficiency, and listed in the latest AHRI directory.

— Unit construction will comply with latest edition of ANSI/ ASHRAE and with NEC.

— Unit will be constructed in accordance with UL standards and will carry the UL label of approval. Unit will have c-UL approval.

— Unit cabinet will be capable of withstanding Federal Test Method Standard No. 141 (Method 6061) 500-hr salt spray test.

— Air-cooled condenser coils will be leak tested and pressure tested.

— Unit constructed in ISO9001 approved facility.

Delivery, Storage, and Handling

— Unit will be shipped as single package only and is stored and handled per unit manufacturer's recommendations.

Warranty (for inclusion by specifying engineer)

— U.S. and Canada only.

PRODUCTS

Equipment

— Factory assembled, single piece, air-cooled air conditioner unit. Contained within the unit enclosure is all factory wiring, piping, controls, compressor, refrigerant charge Puron® (R-410A), and special features required prior to field start-up.

Unit Cabinet

— Unit cabinet, including louvered coil guard, will be constructed of galvanized steel, bonderized, and coated with a powder coat paint.

Fans

— Condenser fan will be direct-drive propeller type, discharging air upward.

— Condenser fan motors will be totally enclosed, 1-phase type with class B insulation and permanently lubricated bearings. Shafts will be corrosion resistant.

— Fan blades will be statically and dynamically balanced.

— Condenser fan openings will be equipped with coated steel wire safety guards.

Compressor

— Compressor will be hermetically sealed.

— Compressor will be mounted on rubber vibration isolators.

Condenser Coil

— Condenser coil will be air cooled.

— Coil will be constructed of aluminum fins mechanically bonded to copper tubes which are then cleaned, dehydrated, and sealed.

Refrigeration Components

— Refrigeration circuit components will include liquid-line shutoff valve with sweat connections, vapor-line shutoff valve with sweat connections, system charge of Puron® (R-410A) refrigerant, and compressor oil.

— Unit will be equipped with high-pressure switch, low pressure switch and filter drier for Puron refrigerant.

Operating Characteristics

— The capacity of the unit will meet or exceed _____ Btuh at a suction temperature of _____ °F/°C. The power consumption at full load will not exceed _____ kW.

— Combination of the unit and the evaporator or fan coil unit will have a total net cooling capacity of _____ Btuh or greater at conditions of _____ CFM entering air temperature at the evaporator at _____ °F/°C wet bulb and _____ °F/°C dry bulb, and air entering the unit at _____ °F/°C.

— The system will have a SEER of _____ Btuh/watt or greater at DOE conditions.

Electrical Requirements

— Nominal unit electrical characteristics will be _____ v, single phase, 60 hz. The unit will be capable of satisfactory operation within voltage limits of _____ v to _____ v.

— Unit electrical power will be single point connection.

— Control circuit will be 24v.

Special Features

— Refer to section of this literature identifying accessories and descriptions for specific features and available enhancements.

SYSTEM DESIGN SUMMARY

1. Intended for outdoor installation with free air inlet and outlet. Outdoor fan external static pressure available is less than 0.01-in. wc.
2. This product is not qualified for low ambient cooling operation (below 55°F/12.8°C) and no low ambient kit is available.
3. The maximum outdoor operating ambient in cooling mode is 125°F (51.67°C) when operating voltage is 230v. For 208v applications, the maximum outdoor ambient is 120°F (48.9°C).
4. For reliable operation, unit should be level in all horizontal planes.
5. For interconnecting refrigerant tube lengths greater than 80 ft (23.4 m) and/or 35 ft (10.7 m) vertical differential, consult Residential Piping and Longline Guideline and Service Manual available from equipment distributor.
6. If any refrigerant tubing is buried, provide a 6 in. (152.4 mm) vertical rise to the valve connections at the unit. Refrigerant tubing lengths up to 36 in. (914.4 mm) may be buried without further consideration. Do not bury refrigerant lines longer than 36 in. (914.4 mm).
7. Use only copper wire for electric connection at unit. Aluminum and clad aluminum are not acceptable for the type of connector provided.
8. Do not apply capillary tube indoor coils to these units.
9. Factory-supplied filter drier must be installed.

Copyright 2009 Carrier Corp. • 7310 W. Morris St. • Indianapolis, IN 46231
Printed in U.S.A. Edition Date: 06/09

Catalog No. 24ACB6–2PD

Manufacturer reserves the right to change, at any time, specifications and designs without notice and without obligations.

Replaces: 24ACB6–1PD