24VNA9 Infinity® 19VS Variable Speed Air Conditioner with Puron® Refrigerant 1 – 5 Tons

Carrier
turn to the experts

Product Data

INFINITY® 19VS

The Infinity® 19VS air conditioner offers high-efficiency variable speed performance in a remarkably small cabinet and provides up to 19 SEER cooling efficiency. The variable speed inverter capacity control delivers up to 5 stages of operation for exceptional load matching, dehumidification and zoning performance.

This product has been designed and manufactured to provide flexible system matching and work with a wide variety of indoor units and controls.

NOTE: Ratings contained in this document are subject to change at any time. Always refer to the AHRI directory (www.ahridirectory.org) for the most up-to-date ratings information.

INDUSTRY LEADING FEATURES / BENEFITS

Energy Efficiency

- Up to 19 SEER / 13 EER
- Microtube Technology™ refrigeration system

Sound

- Sound level as low as 55 dBA in low speed (Silencer System II).
- Soft start and smooth ramp to operating speeds

Comfort

- Variable speed compressor operates at 5 stages with capacity range from as wide as 25-100%
- Air cooled Inverter variable speed drive
  - — System requires Infinity® Touch Control with version 11 software or newer for 5 stage operation on sizes 24 - 60 and version 12 or higher on size 13.
  - — Ratings provided with 2-stage thermostats and suitable non-communicating indoor products for 2-stage operation.

Reliability

- Puron® refrigerant - environmentally sound, won't deplete the ozone layer and low lifetime service cost.
- Front-seating service valves
- Inverter control drives compressor and fan motor
- No control module attached to fan motor
- Infinity intelligence monitors critical system parameters
- Pressure equalizer valve for easy compressor starting
- High pressure switch
- Suction pressure transducer
- Compressor discharge temperature sensor
- Suction temperature sensor
- Filter drier (field installed)
- Internal crankcase heater standard

Flexibility and installation:

- 2 control wires to outdoor unit in complete Infinity system and Touch Control
- Energy Tracking capability with the Infinity® Touch Control (Energy Tracking has the ability to monitor and estimate the energy consumption of your Infinity® system.)
- Smaller and lighter than 2-stage units
- Minimum and Maximum adjustments with Infinity® Touch Control
- Compatible with non-communicating thermostats

Durability

WeatherArmor Ultra™ protection package:

- Solid, Durable sheet metal construction
- Steel louver coil guard
- Baked-on, complete outer coverage, powder paint

Applications

- Line sets up to 100 ft (30.5 m) equivalent length
- No long-line accessories required.

MODEL NUMBER NOMENCLATURE

1	2	3	4	5	6	7	8	9	10	11	12	13
N	N	A	A	A/N	N	N	N	A/N	A/N	A/N	N	N
2	4	V	N	A	9	3	6	A	0	0	3	0
Product Series		Product Family	Tier	Major Series	SEER	Cooling Capacity		Variations	Open	Open	Voltage	Minor Series
24 = AC		V = VS HP	N= Infinity Series	A = Puron	9 = 19 SEER	1,000 Btuh (nominal)		A = Standard B = Design Variation	0=Not Defined	0=Not Defined	3=208/230–1	0, 1, 2...

Qualifying Models Only

Use of the AHRI Certified TM Mark indicates a manufacturer's participation in the program For verification of certification for individual products, go to www.ahridirectory.org.

STANDARD FEATURES

FEATURES	Unit Size – Voltage, Series							
	13	24B	25	36	37	48	49	60
Puron Refrigerant	X	X	X	X	X	X	X	X
Variable Speed Rotary Compressor	X	X	X	X	X	X	X	X
Air–Cooled Integrated Inverter Drive	X	X	X	X	X	X	X	X
Louvered Coil Guard	X	X	X	X	X	X	X	X
Field Installed Filter Drier	X	X	X	X	X	X	X	X
Front Seating Service Valves	X	X	X	X	X	X	X	X
Internal Pressure and Temperature Protection	X	X	X	X	X	X	X	X
Suction Pressure Transducer	X	X	X	X	X	X	X	X
High Pressure Switch	X	X	X	X	X	X	X	X
Internal Crankcase Heater	X	X	X	X	X	X	X	X
Enhanced Diagnostics with Infinity® Touch Control (version 11 software or newer for 5 stage operation on sizes 24 – 60 and version 12 or higher on size 13.)	X	X	X	X	X	X	X	X
Deluxe Sound Blanket	X	X	X	X	X	X	X	X
Outdoor Air Temperature Sensor	X	X	X	X	X	X	X	X

X = Standard

PHYSICAL DATA

UNIT SIZE SERIES	13–30	24B–30	25–30	36–30	37–30	48–30	49–30	60–30
Compressor Type	Variable Speed Rotary							
REFRIGERANT	Puron® (R–410A)							
Control	TXV (Puron® Hard Shutoff)							
Charge lb (kg)	4.6 (2.09)	4.80 (2.18)	5.5 (2.50)	6.0 (2.72)	7.5 (3.40)	7.5 (3.40)	9.6 (4.35)	8.30 (3.76)
COND FAN	Forward Swept Propeller Type, Direct Drive							
Air Discharge	Vertical							
Air Qty (CFM)	1600	2500	2500	2500	4500	4500	4800	4500
Motor HP	1/5	1/5	1/3	1/3	1/3	1/3	1/3	1/3
Motor RPM	650	825	1050	1050	850	850	850	900
COND COIL								
Face Area (Sq ft)	11.12	11.12	13.90	13.90	21.50	21.50	27.53	23.65
Fins per In.	20	20	20	20	20	20	25	20
Rows	1	1	1	1	1	1	1	1
Circuits	6	5	6	6	8	8	8	8
VALVE CONNECT. (In. ID)								
Vapor	5/8	5/8	3/4	3/4	7/8	7/8	7/8	7/8
Liquid	3/8							
REFRIGERANT TUBES (In. OD)								
Rated Vapor*	3/4	3/4	7/8	7/8	1–1/8	1–1/8	1–1/8	1–1/8
Max Liquid Line	3/8							

* Units are rated with 25 ft (7.6 m) of lineset length. See Vapor Line Sizing and Cooling Capacity Loss table when using other sizes and lengths of lineset.

Note: See unit Installation Instruction for proper installation.

REFRIGERANT PIPING LENGTH LIMITATIONS

Maximum Line Lengths:

The maximum allowable total equivalent length for air conditioners can vary depending on the vertical separation. See the tables below for allowable lengths depending on whether the outdoor unit is on the same level, above or below the outdoor unit.

Maximum Line Lengths for Air Conditioner Applications

	MAXIMUM ACTUAL LENGTH ft (m)	MAXIMUM EQUIVALENT LENGTH† ft (m)	MAXIMUM VERTICAL SEPARATION ft (m)
Units on equal level	100 (30.5)	100 (30.5)	N/A
Outdoor unit ABOVE indoor unit	100 (30.5)	100 (30.5)	100 (30.5)
Outdoor unit BELOW indoor unit	See Table *'Maximum Total Equivalent Length: Outdoor Unit BELOW Indoor Unit'*		

† Total equivalent length accounts for losses due to elbows or fitting. See the Long Line Guideline for details.

Maximum Total Equivalent Length† - Outdoor Unit BELOW Indoor Unit

Size	Liquid Line Diameter w/ TXV	AC with Puron® Refrigerant – Maximum Total Equivalent Length† Vertical Separation ft (m) Outdoor unit BELOW indoor unit;						
		0–20 (0 – 6.1)	21–30 (6.4 – 9.1)	31–40 (9.4 – 12.2)	41–50 (12.5 – 15.2)	51–60 (15.5 – 18.3)	61–70 (18.6 – 21.3)	71–80 (21.6 – 24.4)
1–Ton	3/8	100*	100*	100*	100*	100*	100*	100*
2–Ton	3/8	100*	100*	100*	100*	100*	100*	100*
3–Ton	3/8	100*	100*	100*	100*	100*	100*	100*
4–Ton	3/8	100*	100*	100*	100*	100	100	– –
5–Ton	3/8	100*	100*	100*	100*	100	100	– –

*** Maximum actual length not to exceed 100 ft (30.5 m)**

† Total equivalent length accounts for losses due to elbows or fitting.

– – = outside acceptable range

LONG LINE APPLICATIONS

Unit is approved for up to 100 ft (30.5 m) equivalent length and vertical separations shown above with no additional accessories. Longer line set applications are not permitted.

COOLING CAPACITY LOSS TABLE

Nominal Size (Btuh)	Line OD (in.)	24VNA9 Cooling Capacity Loss (%) Total Equivalent Line Length (ft)				
		25	50	75	80	100
13	5/8	0.5	1.2	1.8	1.9	2.4
	3/4	**0.1**	**0.4**	**0.6**	**0.7**	**0.8**
24B	5/8	0.5	1.2	1.8	1.9	2.4
	3/4	**0.1**	**0.4**	**0.6**	**0.7**	**0.8**
25	5/8	0.5	1.2	1.8	1.9	2.4
	3/4	0.1	0.4	0.6	0.7	0.8
	7/8	0.0	0.1	0.3	0.3	0.4
36	5/8	1.1	2.4	3.7	4.0	5.0
	3/4	0.3	0.8	1.3	1.4	1.8
	7/8	0.0	0.3	0.5	0.6	0.8
37 48 49	3/4	0.7	1.6	2.4	2.6	3.2
	7/8	0.3	0.7	1.1	1.2	1.6
	1 1/8	0.0	0.1	0.2	0.3	0.4
60	3/4	1.0	2.3	3.5	3.8	4.8
	7/8	0.4	1.0	1.7	1.8	2.3
	1 1/8	0.0	0.1	0.3	0.4	0.5

Rating Line Size in **BOLD**

MIN/MAX AIRFLOW TABLES

The indoor airflow delivered by this system varies significantly based on outdoor temperature, indoor unit combination, and system demand. The airflows on these tables are for duct design considerations. Duct systems capable of these ranges will ensure the system will deliver full capacity at all outdoor temperatures. Minimum and maximum airflows can be adjusted from these numbers in the Infinity Control Setup screen.

Cooling – Comfort Mode			Minimum Cooling (Dehum or Zoning)
Size	Max Stage 5 Airflow	Max Stage 1 Airflow	
1–Ton	420	300	300
2–Ton	739	300	300
3–Ton	990	300	300
4–Ton	1389	542	457
5–Ton	1600	700	600

Cooling – Efficiency Mode		
Size	Max Stage 5 Airflow	Max Stage 1 Airflow
1–Ton	420	300
2–Ton	825	585
3–Ton	1050	600
4–Ton	1400	875
5–Ton	1800	975

Cooling Max Mode		
Size	Max Stage 5 Airflow	Max Stage 1 Airflow
1–Ton (550 cfm/ delivered ton)	780	434
2–Ton (24)	850	585
2–Ton (25) (550 cfm/ delivered ton)*	1350	510
3–Ton	1200	600
4–Ton	1600	875
4–Ton–49	1450	875
5–Ton	2000	975

* Serial number beginning with 0115E and newer

LEGEND::

Max Capacity Airflow – Stage 5 airflow varies depending on conditions. This is the highest airflow the system will attempt to deliver in this particular mode. Ductwork for non–zoned systems should be sized for this airflow to ensure the system can deliver full capacity when needed. Improper duct design may result in excessive airflow noise and/or cutback occurrences at max airflow conditions.

Highest Min. Capacity Airflow – Stage 1 airflow also varies depending on conditions. In zoned systems, each zone must be capable of delivering this airflow for the system to deliver full capacity into the zone. Otherwise, airflow may be diverted to other zones or cutback may occur.

Min Cooling (Dehum or Zoning) – Lowest airflow the system will deliver. May operate down to this airflow in dehumidification mode or in zoning applications where ductwork restrictions have caused the blower to cut–back.

ELECTRICAL DATA

UNIT SIZE–VOLTAGE, SERIES	V/PH	OPER VOLTS*		COMPR		FAN	MCA	MAX FUSE ** or CKT BRK AMPS
		MAX	MIN	LRA	RLA	FLA		
13–30	208–230–1	253	197	N/A	10.3	0.58	13.5	20
24B–30				N/A	10.3	0.58	13.5	20
25–30				N/A	17.7	1.20	23.6	40
36–30				N/A	18.4	1.20	24.2	40
37–30				N/A	19.6	1.20	26.0	40
48–30				N/A	20.9	1.20	27.3	40
49–30				N/A	19.6	1.40	26.0	40
60–30				N/A	30.9	1.40	40.0	60

* Permissible limits of the voltage range at which the unit will operate satisfactorily

** Time–Delay fuse.

FLA – Full Load Amps

LRA – Locked Rotor Amps

MCA – Minimum Circuit Amps

RLA – Rated Load Amps

NOTE: Control circuit is 24–V on all units and requires external power source. Copper wire must be used from service disconnect to unit.

All motors/compressors contain internal overload protection.

Complies with 2010 requirements of ASHRAE Standards 90.1

CHARGING SUBCOOLING (TXV-TYPE EXPANSION DEVICE)

UNIT SIZE–VOLTAGE, SERIES	
13–30	**If a Touch Control is installed, subcooling recommendation displayed in Charging Mode must be followed. If not, subcooling chart shown on the charging label must be followed**
24B–30	
25–30	
36–30	
37–30	
48–30	
49–30	
60–30	

RPM-CAPACITY-SOUND (dBA)*

STAGE #	COMP RPM	CAPACITY %	SOUND (dBA)
24VNA913			
1	1500	58%	58
2	1867	72%	59
3	2100	81%	59
4	2350	90%	59
5	2600	100%	60
24VNA924B			
1	1500	35%	55
2	2566	56%	60
3	3150	69%	65
4	3950	87%	66
5	4700	100%	68
24VNA925			
1	1200	36%	56
2	1900	58%	61
3	2400	73%	63
4	2600	79%	67
5	3300	100%	69
24VNA936			
1	1200	25%	56
2	2400	50%	61
3	3300	69%	65
4	4200	88%	69
5	4800	100%	71
24VNA937			
1	1200	40%	56
2	1800	60%	63
3	2200	73%	67
4	2600	87%	67
5	3000	100%	68
24VNA948			
1	1500	35%	62
2	2460	57%	65
3	2800	65%	67
4	3650	84%	70
5	4320	100%	72
24VNA949			
1	1200	38%	57
2	1840	59%	62
3	2300	74%	66
4	2700	87%	68
5	3120	100%	73
24VNA960			
1	1200	32%	57
2	2180	55%	61
3	2850	70%	64
4	3700	90%	70
5	4140	100%	72

*Estimated sound for stages 2, 3, and 4
For 2−stage operation: Low = Stage 2, High = Stage 5

SOUND POWER LEVEL (dBA)

Unit Size – Voltage, Series	Typical Octave Band Spectrum (without tone adjustment)	Min Speed Cooling	Max Speed Cooling
013 – 30	Freq (Hz)	1500 RPM	2600 RPM
	125	62.0	64.0
	250	61.0	59.5
	500	54.0	55.0
	1000	53.0	57.0
	2000	49.0	50.0
	4000	42.0	49.5
	8000	47.5	49.5
	Sound Rating (dBA)	59	63
024B – 30	Freq (Hz)	1500 RPM	4700 RPM
	125	63.0	67.5
	250	57.0	66.5
	500	51.5	61.5
	1000	47.5	58.0
	2000	41.5	54.5
	4000	38.0	57.5
	8000	45.5	53.5
	Sound Rating (dBA)	55	67
025 – 30	Freq (Hz)	1200 RPM	3300 RPM
	125	59.5	70.0
	250	56.0	67.5
	500	54.0	67.5
	1000	50.0	63.5
	2000	41.5	59.0
	4000	35.0	58.0
	8000	48.0	51.5
	Sound Rating (dBA)	55	69
036 – 30	Freq (Hz)	1200 RPM	4800 RPM
	125	59.5	70.0
	250	56.0	68.0
	500	54.0	66.0
	1000	50.0	64.0
	2000	41.5	61.5
	4000	35.0	62.0
	8000	48.0	55.5
	Sound Rating (dBA)	55	72
037 – 30	Freq (Hz)	1200 RPM	3000 RPM
	125	64.0	74.0
	250	61.0	68.0
	500	57.5	66.5
	1000	53.5	61.5
	2000	49.0	59.5
	4000	42.0	57.5
	8000	44.0	51.0
	Sound Rating (dBA)	60	69
048 – 30	Freq (Hz)	1500 RPM	4320 RPM
	125	67.0	73.5
	250	63.0	71.5
	500	57.0	69.5
	1000	54.5	64.5
	2000	51.0	62.5
	4000	54.0	62.5
	8000	47.5	54.5
	Sound Rating (dBA)	64	72
49 – 30	Freq (Hz)	1200	3120
	125	44.5	52.0
	250	48.5	63.0
	500	50.5	63.5
	1000	51.5	67.5
	2000	47.5	61.5
	4000	43.5	58.5
	8000	47.5	54.5
	Sound Rating (dBA)	57	73.0
060 – 30	Freq (Hz)	1200 RPM	4140 RPM
	125	61.5	71.5
	250	59.5	73.0
	500	54.5	70.0
	1000	50.5	65.0
	2000	44.0	62.0
	4000	41.5	60.5
	8000	49.0	58.0
	Sound Rating (dBA)	57	72

NOTE: Tested in compliance with AHRI 270 – 1995 but not listed with AHRI.

ACCESSORIES

KIT NUMBER	KIT NAME	13–30	24B–30	25–30	36–30	37–30	48–30	49–30	60
KSASF0101AAA	SPRT FEET KIT						X	X	X
KSASF0201AAA	SPRT FEET KIT	X	X	X	X	X			
KSATX0201PUR	TXV KIT	X	X	X					
KSATX0301PUR	TXV KIT				X	X			
KSATX0401PUR	TXV KIT						X	X	
KSATX0501PUR	TXV KIT								X
KSBTX0201PUR	TXV KIT	X	X	X					
KSBTX0301PUR	TXV KIT				X	X			
KSBTX0401PUR	TXV KIT						X	X	
LM10KK003	VAPOR LINE MUFFLER	X	X	X	X	X	X	X	X

x = Accessory

Accessory Description and Usage

Support Feet

Raises unit above base pad. 2 and 3 ton kit contains 5 feet for stable installation with small base. 4 and 5 ton kit contains 4 feet.

Usage Guideline:

Recommended for rooftop applications

Thermostatic Expansion Valve (TXV)

A modulating flow-control valve which meters refrigerant liquid flow rate into the evaporator in response to the superheat of the refrigerant gas leaving the evaporator.

Usage Guideline:

Required if indoor unit does not already contain Puron® refrigerant TXV

Vapor Line Muffler

An external muffler installed in the vapor line to minimize vibration transmitted through refrigerant lines

Usage Guideline:

Recommended if vapor line is not installed per recommendations in the installation instructions and vibration may be transmitted into the structure.

CONTROLS

SYSTXCCITN01–A	Infinity® Touch Control (non–Wi–Fi) (version 11 software or newer for 5 stage operation on sizes 24 – 60 and version 12 or higher on size 13.)
SYSTXCCITC01–A	Infinity® Touch Control (Wi–Fi) (version 11 software or newer for 5 stage operation on sizes 24 – 60 and version 12 or higher on size 13.)
SYSTXCCITW01–A	Infinity® Touch Control with Wi–Fi & Wireless Access Point
SYSTXCC4ZC01	Infinity® 4–Zone Damper Control Module
SYSTXCCSMS01	Infinity® Smart Sensor (Optional wall control used to monitor temperature and/or fan control in an individual zone.)
SYSTXCCNIM01	Infinity® Network Interface Module (Connects Heat Recovery and Energy Recovery Ventilators on non–zoning applications.)
SYSTXCCSMS01	Infinity® Smart Sensor

THERMOSTATS

PART NUMBER	PROGRAM	GAS	ELECTRIC	HEAT	COOL
TP–PAC01	7–Day	√	√	1	1
TP–NRH01–A	NP	√	√	3	2
TP–NAC01	NP	√	√	1	1

DIMENSIONS - ENGLISH

UNIT	SERIES	ELECTRICAL CHARACTERISTICS				A	B	C	D	E	F	G	K	L	M	N	P	OPERATING WEIGHT (lbs)	SHIPPING WEIGHT (lbs)	SHIPPING DIMENSIONS (L x W x H)
24VNA913A	0	X	O	O	O	23 1/8"	31 5/8"	3 3/4"	3/4"	4 7/16"	18 1/16"	7 13/16"	2 13/16"	1/2'	11 1/4"	11 1/4"	14 1/2"	135	158	25 1/4" X 25 1/4" X 35 5/8"
24VNA924B	0	X	O	O	O	23 1/8"	31 5/8"	3 3/4"	3/4"	4 7/16"	18 1/16"	7 13/16"	2 13/16"	1/2"	11 1/4"	11 1/4"	14 1/2"	135	158	25 1/4" X 25 1/4" X 35 5/8"
24VNA925A	0	X	O	O	O	23 1/8"	38 7/16"	3 3/4"	3/4"	4 7/16"	18 1/16"	7 13/16"	2 13/16"	1/2"	10 3/4"	10 3/4"	18 1/4"	160	186	25 1/4" X 25 1/4" X 43 3/8"
24VNA936A	0	X	O	O	O	23 1/8"	38 7/16"	3 3/4"	3/4"	4 7/16"	18 1/16"	7 13/16"	2 13/16"	1/2"	10 3/4"	10 3/4"	18 1/4"	160	186	25 1/4" X 25 1/4" X 43 3/8"
24VNA937A	0	X	O	O	O	31 3/16"	39 3/4"	3 7/8"	7/8"	6 9/16"	24 11/16"	9 1/8"	2 15/16"	5/8"	14 1/2"	14 5/8"	18 3/4"	216	255	33 3/8" X 33 3/8" X 46 1/8"
24VNA948A	0	X	O	O	O	31 3/16"	39 3/4"	3 7/8"	7/8"	6 9/16"	24 11/16"	9 1/8"	2 15/16"	5/8"	14 1/2"	14 5/8"	18 3/4"	216	255	33 3/8" X 33 3/8" X 46 1/8"
24VNA949A	0	X	O	O	O	35"	44"	3 7/8"	7/8"	6 9/16"	28 7/16"	9 1/8"	2 15/16"	5/8"	16 1/4"	16 1/4"	20 1/2"	262	300	36 1/8" X 39 1/4" X 50 3/16"
24VNA960A	0	X	O	O	O	31 3/16"	43 3/16"	3 7/8"	7/8"	6 9/16"	24 11/16"	9 1/8"	2 15/16"	5/8"	16 1/2"	15"	20"	241	282	33 3/8" X 33 3/8" X 49 9/16"
		208-230-1-60	230-1-60	208/230-3-60	460-3-60															

X = YES
O = NO

NOTES:

1. ALLOW 30" CLEARANCE TO SERVICE SIDE OF UNIT, 48" ABOVE UNIT, 6" ON ONE SIDE, 12" ON REMAINING SIDE, AND 24" BETWEEN UNITS FOR PROPER AIRFLOW.
2. MINIMUM OUTDOOR OPERATING AMBIENT IN COOLING MODE IS 55°F, MAX. 115°F.
3. SERIES DESIGNATION IS THE 13TH POSITION OF THE UNIT MODEL NUMBER.
4. CENTER OF GRAVITY ⊕.
5. ALL DIMENSIONS ARE IN "INCHES" UNLESS NOTED.

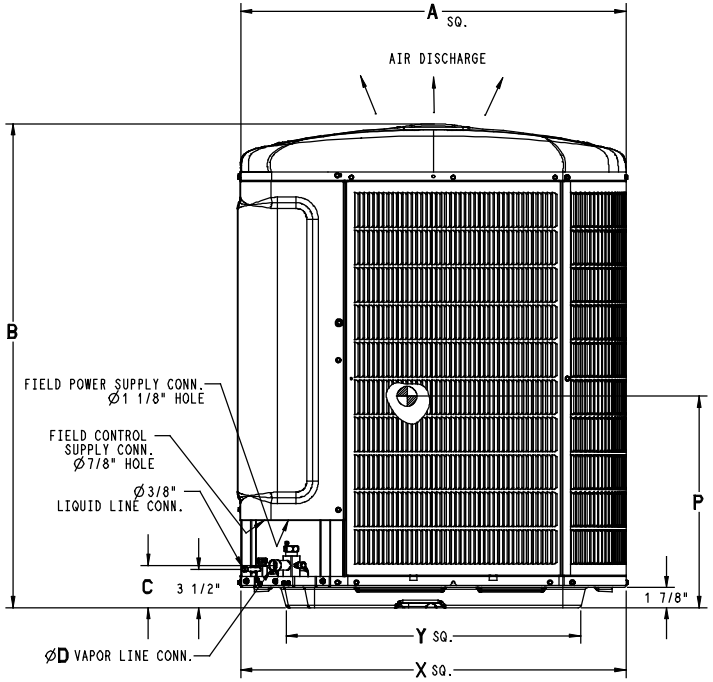

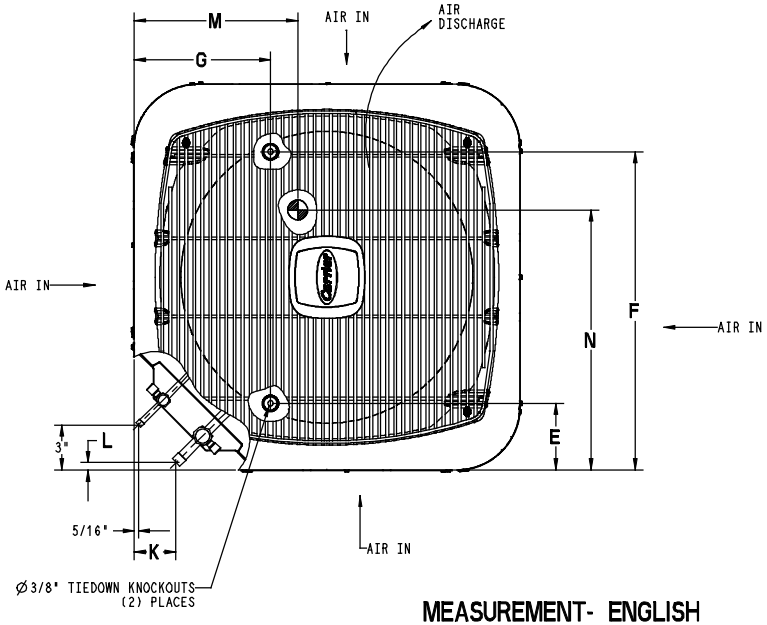

MEASUREMENT- ENGLISH

UNIT SIZE	"X" MIN GROUND MOUNTING PAD APPLICATION DIMENSIONS	"Y" MIN ROOF-TOP MOUNTING PAD APPLICATION DIMENSIONS
13,24,25,36	23 1/8"	17 3/4"
-	25 3/4"	20 7/16"
37,48,60	31 3/16"	23"
49	35"	26 3/4"

DIMENSIONS - SI

UNIT	SERIES	ELECTRICAL CHARACTERISTICS				A	B	C	D	E	F	G	K	L	M	N	P	OPERATING WEIGHT (Kgs)	SHIPPING WEIGHT (Kgs)	SHIPPING DIMENSIONS (L x W x H)
24VNA913A	0	X	0	0	0	587.3	803.1	96.1	19.1	112.7	458.8	198.4	71.4	12.7	285.8	285 8	368.3	61.2	71 7	641.5 X 641.5 X 905.2
24VNA924B	0	X	0	0	0	587.3	803.1	96.1	19.1	112.7	458.8	198.4	71.4	12.7	285.8	285.8	368.3	61.2	71.7	641.5 X 641.5 X 905.2
24VNA925A	0	X	0	0	0	587.3	975.9	96.1	19.1	112.7	458.8	198.4	71.4	12.7	273.1	273.1	463.6	72.6	84.4	641.5 X 641.5 X 1102.2
24VNA936A	0	X	0	0	0	587.3	975.9	96.1	19.1	112.7	458.8	198.4	71.4	12.7	273.1	273.1	463.6	72.6	84.4	641.5 X 641.5 X 1102.2
24VNA937A	0	X	0	0	0	792.2	1010.3	98.4	22.2	166.7	627.1	231.8	74.6	15.9	368.3	371.5	476.3	98.0	115.7	846.6 X 846.6 X 1172.2
24VNA948A	0	X	0	0	0	792.2	1010.3	98.4	22.2	166.7	627.1	231.8	74.6	15.9	368.3	371.5	476.3	98.0	115.7	846.6 X 846.6 X 1172.2
24VNA949A	0	X	0	0	0	889.0	1117.6	98.4	22.2	166.7	722.3	231.8	74.6	15.9	412.8	412.8	520.7	118.8	136.1	917.6 X 997.0 X 1274.8
24VNA960A	0	X	0	0	0	792.2	1096.7	98.4	22.2	166.7	627.1	231.8	74.6	15.9	419.1	381.0	508.0	109.3	127.9	846.6 X 846.6 X 1258.6

208-230-1-60	230-1-60	208/230-3-60	460-3-60

X = YES
O = NO

NOTES:

1. ALLOW 762.0 CLEARANCE TO SERVICE SIDE OF UNIT, 1219.2 ABOVE UNIT, 152.4 ON ONE SIDE, 304.8 ON REMAINING SIDE, AND 609.6 BETWEEN UNITS FOR PROPER AIRFLOW.
2. MINIMUM OUTDOOR OPERATING AMBIENT IN COOLING MODE IS 13°C, MAX. 46°C.
3. SERIES DESIGNATION IS THE 13TH POSITION OF THE UNIT MODEL NUMBER.
4. CENTER OF GRAVITY ⊕.
5. ALL DIMENSIONS ARE IN "MM" UNLESS NOTED.

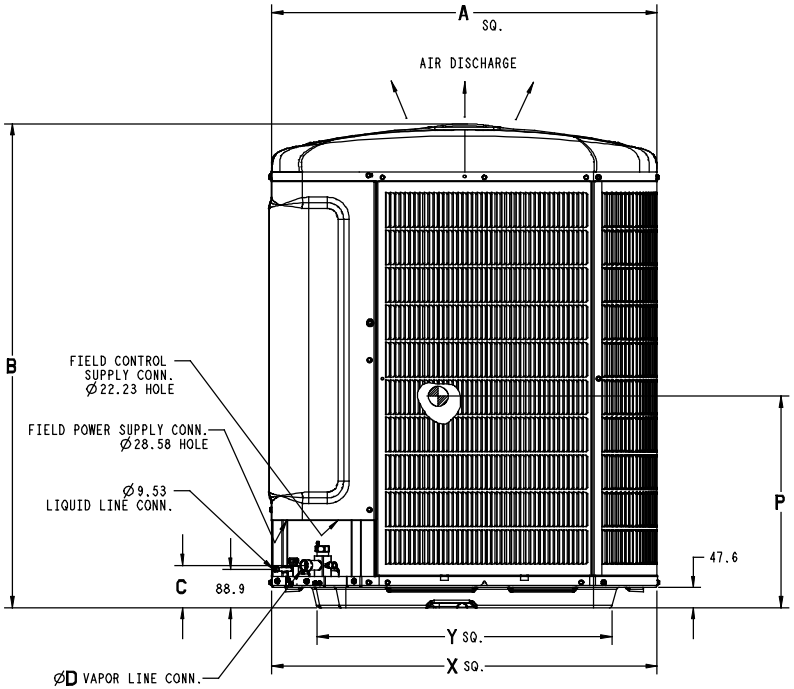

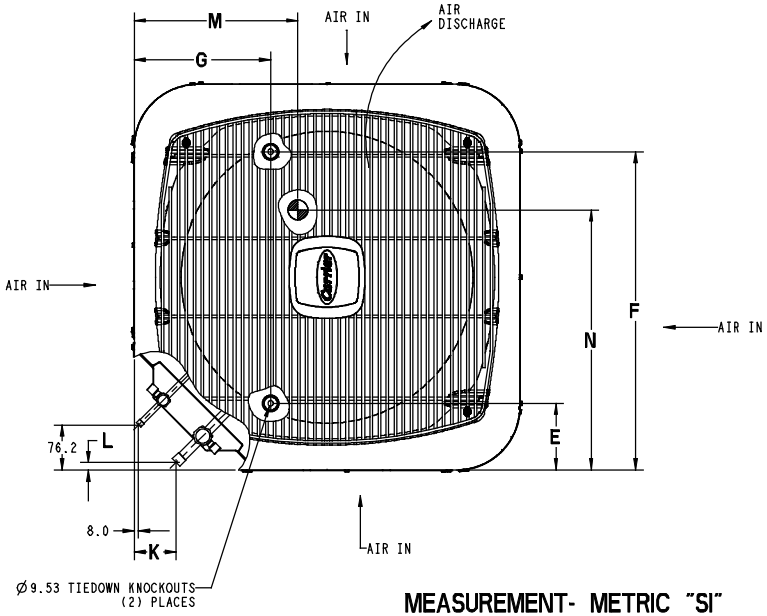

MEASUREMENT- METRIC "SI"

UNIT SIZE	"X" MIN GROUND MOUNTING PAD APPLICATION DIMENSIONS	"Y" MIN ROOF-TOP MOUNTING PAD APPLICATION DIMENSIONS
13,24,25,36	587.4	451.3
-	654.0	518.5
37,48,60	792.2	583.2
49	889.0	679.7

TESTED AHRI COMBINATION RATINGS*

NOTE: Ratings contained in this document are subject to change at any time.
For AHRI ratings certificates, please refer to the AHRI directory www.ahridirectory.org
Additional ratings and system combinations can be accessed via the Carrier database at: www.MyCarrierRatings.com

Outdoor Model Number	Indoor Model Number	Furnace Model Number	Cooling Capacity High	EER	SEER	ID CFM
24VNA913A*030*	FE4ANF002L+UI		12800	13.0	17.0	420
24VNA924B*030*	FE4ANF002L+UI		24000	11.0	17.5	825
24VNA925A*030*	FE4AN(B,F)005L+UI		24000	12.5	19.0	825
24VNA936A*030*	FE4AN(B,F)005L+UI		35000	10.5	18.0	1050
24VNA937A*030*	FE4ANB006L+UI		33600	13.0	18.5	1050
24VNA948A*030*	FE4ANB006L+UI		46500	11.0	18.0	1400
24VNA949A*030*	CNPV*6024AL*+UI	58CV(A,X)155–22	44500	12.5	19.0	1200
24VNA960A*030*	FE4ANB006L+UI		57000	10.0	16.5	1600

* Ratings are net values reflecting the effects of circulating fan heat. Supplemental electric heat is not included. Ratings are based on:
Cooling Standard: 80°F (27°C) db 67°F (19°C) wb indoor entering air temperature and 95°F (35°C) db air entering outdoor unit.
EER — Energy Efficiency Ratio
SEER — Seasonal Energy Efficiency Ratio
UI — User Interface

NOTE: Ratings contained in this document are subject to change at any time.

DETAILED COOLING CAPACITIES# - EFFICIENCY MODE

EDB °F (°C)	EVAP. AIR	24VNA913 / FE4ANF002L Efficiency Mode Condenser Entering Air Temperature °F (°C)																							
		115 (46.1)				105 (40.5)				95 (35)				85 (29.4)				75 (23.9)				65 (18.3)			
	EWB °F (°C)	ID SCFM	Capacity MBtuh		Total Sys. KW**	ID SCFM	Capacity MBtuh		Total Sys. KW**	ID SCFM	Capacity MBtuh		Total Sys. KW**	ID SCFM	Capacity MBtuh		Total Sys. KW**	ID SCFM	Capacity MBtuh		Total Sys. KW**	ID SCFM	Capacity MBtuh		Total Sys. KW**
			Total	Sens‡			Total	Sens‡			Total	Sens‡			Total	Sens‡			Total	Sens‡			Total	Sens‡	
STAGE 5																									
75 (23.9)	72 (22.2)	420	12.59	5.26	1.36	420	13.48	5.59	1.17	420	14.21	5.86	0.98	420	15.07	6.18	0.81	420	15.92	6.51	0.65	420	16.76	6.83	0.50
	67 (19.4)		11.37	7.16	1.35		12.17	7.50	1.17		12.84	7.79	0.98		13.61	8.13	0.82		14.37	8.46	0.67		15.11	8.79	0.53
	63 (17.2)		10.47	8.64	1.34		11.21	8.99	1.17		11.83	9.30	0.99		12.53	9.64	0.83		13.22	9.98	0.69		13.89	10.32	0.56
	57 (13.9)		9.83	9.83	1.34		10.40	10.40	1.17		10.89	10.89	0.99		11.42	11.42	0.84		11.93	11.93	0.71		12.42	12.42	0.59
80 (26.7)	72 (22.2)	420	12.55	7.18	1.36	420	13.44	7.52	1.17	420	14.16	7.81	0.98	420	15.02	8.15	0.81	420	15.87	8.49	0.65	420	16.71	8.83	0.50
	67 (19.4)		11.34	9.04	1.35		12.13	9.40	1.17		12.80	9.71	0.98		13.57	10.07	0.82		14.33	10.42	0.67		15.07	10.76	0.53
	63 (17.2)		10.52	10.47	1.35		11.23	10.87	1.17		11.84	11.20	0.99		12.54	11.57	0.83		13.22	11.93	0.69		13.88	12.28	0.56
	57 (13.9)		10.48	10.48	1.34		11.08	11.08	1.17		11.59	11.59	0.99		12.16	12.16	0.83		12.70	12.70	0.70		13.22	13.22	0.57
STAGE 3																									
75 (23.9)	72 (22.2)	300	10.14	4.18	1.01	300	10.85	4.45	0.90	420	12.12	5.12	0.77	420	12.91	5.41	0.66	420	13.68	5.70	0.54	420	14.43	5.98	0.42
	67 (19.4)		9.12	5.54	1.01		9.75	5.82	0.91		10.91	7.08	0.79		11.61	7.38	0.68		12.29	7.68	0.57		12.95	7.97	0.47
	63 (17.2)		8.38	6.62	1.01		8.96	6.90	0.91		10.04	8.60	0.79		10.67	8.92	0.69		11.28	9.23	0.60		11.88	9.53	0.50
	57 (13.9)		7.73	7.73	1.00		8.17	8.17	0.92		9.57	9.57	0.80		10.07	10.07	0.70		10.54	10.54	0.61		11.01	11.01	0.52
80 (26.7)	72 (22.2)	300	10.10	5.57	1.01	300	10.82	5.86	0.90	420	12.07	7.11	0.77	420	12.86	7.42	0.66	420	13.63	7.73	0.54	420	14.38	8.03	0.42
	67 (19.4)		9.09	6.92	1.01		9.73	7.22	0.91		10.89	9.03	0.79		11.58	9.36	0.68		12.25	9.68	0.57		12.91	9.99	0.47
	63 (17.2)		8.39	7.99	1.01		8.97	8.29	0.91		10.24	10.24	0.79		10.78	10.78	0.69		11.34	11.19	0.59		11.92	11.53	0.50
	57 (13.9)		8.23	8.23	1.01		8.70	8.70	0.91		10.23	10.23	0.79		10.75	10.75	0.69		11.26	11.26	0.60		11.76	11.76	0.50
STAGE 1																									
75 (23.9)	72 (22.2)	200	8.50	3.45	0.83	200	9.09	3.68	0.77	300	8.44	3.60	0.51	300	9.06	3.83	0.44	300	9.67	4.05	0.36	300	10.28	4.28	0.28
	67 (19.4)		7.65	4.36	0.83		8.17	4.60	0.77		7.61	5.05	0.51		8.16	5.29	0.45		8.70	5.53	0.39		9.23	5.77	0.31
	63 (17.2)		7.04	5.08	0.82		7.51	5.32	0.77		7.02	6.18	0.51		7.51	6.44	0.46		8.00	6.69	0.40		8.46	6.93	0.34
	57 (13.9)		6.23	6.15	0.81		6.63	6.39	0.77		6.75	6.75	0.52		7.16	7.16	0.47		7.54	7.54	0.41		7.90	7.90	0.36
80 (26.7)	72 (22.2)	200	8.48	4.39	0.83	200	9.06	4.63	0.77	300	8.40	5.06	0.51	300	9.02	5.30	0.44	300	9.64	5.55	0.36	300	10.24	5.80	0.28
	67 (19.4)		7.63	5.29	0.83		8.15	5.54	0.77		7.59	6.49	0.51		8.14	6.76	0.45		8.68	7.02	0.39		9.21	7.28	0.31
	63 (17.2)		7.03	6.01	0.82		7.49	6.26	0.77		7.23	7.23	0.51		7.66	7.66	0.46		8.08	8.08	0.40		8.50	8.42	0.33
	57 (13.9)		6.58	6.58	0.82		6.94	6.94	0.77		7.22	7.22	0.51		7.65	7.65	0.46		8.06	8.06	0.40		8.46	8.46	0.34

Operation in this area is restricted to maintain reliable system operation and customer comfort. The system will default to the next available stage
Stage 1 – Compressor speed limited to stage two at 105 and 115 outdoor.

See additional notes on page 26

DETAILED COOLING CAPACITIES# - EFFICIENCY MODE CONTINUED

EDB °F (°C)	EVAP. AIR	24VNA924B / FE4ANF002L Efficiency Mode Condenser Entering Air Temperature °F (°C)																							
		115 (46.1)				105 (40.5)				95 (35)				85 (29.4)				75 (23.9)				65 (18.3)			
	EWB °F (°C)	ID SCFM	Capacity MBtuh		Total Sys. KW**	ID SCFM	Capacity MBtuh		Total Sys. KW**	ID SCFM	Capacity MBtuh		Total Sys. KW**	ID SCFM	Capacity MBtuh		Total Sys. KW**	ID SCFM	Capacity MBtuh		Total Sys. KW**	ID SCFM	Capacity MBtuh		Total Sys. KW**
			Total	Sens‡			Total	Sens‡			Total	Sens‡			Total	Sens‡			Total	Sens‡			Total	Sens‡	
STAGE 5																									
75 (23.9)	72 (22.2)	**825**	23.43	9.90	2.85	**825**	25.03	10.49	2.52	**825**	26.46	11.02	2.20	**825**	28.00	11.60	1.91	**825**	29.51	12.16	1.63	**825**	31.01	12.73	1.37
	67 (19.4)		21.30	13.70	2.81		22.76	14.32	2.49		24.07	14.89	2.18		25.46	15.50	1.90		26.82	16.10	1.63		28.19	16.70	1.38
	63 (17.2)		19.74	16.69	2.78		21.07	17.34	2.47		22.29	17.94	2.17		23.58	18.57	1.89		24.85	19.20	1.63		26.11	19.82	1.39
	57 (13.9)		18.74	18.74	2.76		19.81	19.81	2.45		20.78	20.78	2.15		21.79	21.79	1.88		22.78	22.78	1.63		23.74	23.74	1.39
80 (26.7)	72 (22.2)	**825**	23.36	13.70	2.85	**825**	24.96	14.32	2.52	**825**	26.39	14.88	2.20	**825**	27.93	15.49	1.91	**825**	29.44	16.09	1.63	**825**	30.94	16.69	1.37
	67 (19.4)		21.24	17.45	2.81		22.69	18.11	2.49		24.00	18.72	2.18		25.39	19.36	1.90		26.76	19.99	1.63		28.12	20.63	1.38
	63 (17.2)		19.96	19.96	2.78		21.18	20.93	2.47		22.35	21.63	2.17		23.61	22.34	1.89		24.86	23.02	1.63		26.10	23.70	1.38
	57 (13.9)		19.93	19.93	2.78		21.05	21.05	2.47		22.07	22.07	2.16		23.12	23.12	1.89		24.16	24.16	1.63		25.17	25.17	1.39
STAGE 3																									
75 (23.9)	72 (22.2)	**650**	16.60	7.18	1.72	**650**	17.75	7.59	1.53	**650**	18.75	7.96	1.31	**650**	19.88	8.37	1.12	**650**	20.99	8.78	0.94	**650**	22.08	9.18	0.77
	67 (19.4)		15.01	10.22	1.72		16.06	10.66	1.53		16.99	11.06	1.32		18.00	11.49	1.14		18.99	11.92	0.97		19.97	12.34	0.81
	63 (17.2)		13.88	12.59	1.71		14.82	13.06	1.54		15.70	13.48	1.32		16.62	13.94	1.15		17.52	14.38	0.99		18.40	14.82	0.84
	57 (13.9)		13.48	13.48	1.71		14.25	14.25	1.54		14.97	14.97	1.32		15.70	15.70	1.16		16.40	16.40	1.01		17.10	17.10	0.86
80 (26.7)	72 (22.2)	**650**	16.54	10.24	1.72	**650**	17.69	10.68	1.53	**650**	18.68	11.07	1.31	**650**	19.81	11.51	1.12	**650**	20.92	11.94	0.94	**650**	22.01	12.37	0.77
	67 (19.4)		14.98	13.23	1.72		16.01	13.70	1.53		16.94	14.13	1.32		17.95	14.59	1.14		18.93	15.05	0.97		19.91	15.50	0.81
	63 (17.2)		14.42	14.42	1.72		15.24	15.24	1.53		15.99	15.99	1.32		16.77	16.77	1.15		17.61	17.39	0.99		18.46	17.89	0.83
	57 (13.9)		14.40	14.40	1.72		15.22	15.22	1.53		15.96	15.96	1.32		16.74	16.74	1.15		17.50	17.50	0.99		18.23	18.23	0.84
STAGE 1																									
75 (23.9)	72 (22.2)	**650**	14.01	6.30	1.38	**650**	15.00	6.65	1.24	**585**	9.25	4.60	0.54	**585**	9.85	4.81	0.46	**585**	10.45	5.01	0.37	**585**	11.04	5.22	0.29
	67 (19.4)		12.64	9.35	1.39		13.52	9.73	1.25		8.32	7.38	0.55		8.85	7.61	0.48		9.37	7.84	0.40		9.89	8.07	0.33
	63 (17.2)		11.71	11.62	1.39		12.49	12.06	1.26		8.11	8.11	0.55		8.56	8.56	0.48		9.00	9.00	0.41		9.43	9.43	0.34
	57 (13.9)		11.67	11.67	1.39		12.35	12.35	1.26		8.11	8.11	0.55		8.55	8.55	0.48		8.98	8.98	0.41		9.42	9.42	0.34
80 (26.7)	72 (22.2)	**650**	13.95	9.39	1.38	**650**	14.94	9.76	1.24	**585**	9.20	7.43	0.54	**585**	9.80	7.66	0.45	**585**	10.39	7.90	0.37	**585**	10.98	8.13	0.29
	67 (19.4)		12.66	12.32	1.39		13.52	12.75	1.25		8.77	8.77	0.54		9.26	9.26	0.47		9.73	9.73	0.39		10.19	10.19	0.31
	63 (17.2)		12.55	12.55	1.39		13.28	13.28	1.26		8.77	8.77	0.54		9.25	9.25	0.47		9.72	9.72	0.39		10.18	10.18	0.31
	57 (13.9)		12.53	12.53	1.39		13.26	13.26	1.26		8.76	8.76	0.54		9.24	9.24	0.47		9.71	9.71	0.39		10.17	10.17	0.31

Operation in this area is restricted to maintain reliable system operation and customer comfort. The system will default to the next available stage
Stage 1 – Compressor speed limited to stage two at 105 and 115 outdoor.

See additional notes on page 26

DETAILED COOLING CAPACITIES# - EFFICIENCY MODE CONTINUED

EDB °F (°C)	EVAP. AIR	24VNA925/FE4ANF005 Efficiency Mode Condenser Entering Air Temperature °F (°C)																							
		115 (46.1)				105 (40.5)				95 (35)				85 (29.4)				75 (23.9)				65 (18.3)			
	EWB °F (°C)	ID SCFM	Capacity MBtuh		Total Sys. KW**	ID SCFM	Capacity MBtuh		Total Sys. KW**	ID SCFM	Capacity MBtuh		Total Sys. KW**	ID SCFM	Capacity MBtuh		Total Sys. KW**	ID SCFM	Capacity MBtuh		Total Sys. KW**	ID SCFM	Capacity MBtuh		Total Sys. KW**
			Total	Sens‡			Total	Sens‡			Total	Sens‡			Total	Sens‡			Total	Sens‡			Total	Sens‡	
STAGE 5																									
75 (23.9)	72 (22.2)	**825**	23.68	9.99	2.51	**825**	25.12	10.51	2.21	**825**	26.43	11.00	1.90	**825**	27.77	11.50	1.62	**825**	29.08	11.99	1.34	**825**	30.34	12.47	1.07
	67 (19.4)		21.55	13.82	2.50		22.88	14.39	2.21		24.10	14.93	1.92		25.35	15.48	1.65		26.55	16.01	1.39		27.72	16.54	1.13
	63 (17.2)		19.97	16.81	2.49		21.22	17.43	2.22		22.38	18.00	1.93		23.54	18.59	1.67		24.67	19.16	1.42		25.77	19.72	1.17
	57 (13.9)		18.96	18.96	2.48		19.97	19.97	2.21		20.91	20.91	1.94		21.84	21.84	1.69		22.75	22.75	1.45		23.62	23.62	1.21
80 (26.7)	72 (22.2)	**825**	23.52	13.77	2.50	**825**	24.94	14.33	2.20	**825**	26.25	14.85	1.90	**825**	27.59	15.38	1.61	**825**	28.89	15.91	1.34	**825**	30.15	16.42	1.07
	67 (19.4)		21.46	17.56	2.50		22.78	18.18	2.21		24.00	18.75	1.92		25.24	19.33	1.65		26.45	19.90	1.39		27.61	20.46	1.13
	63 (17.2)		20.19	20.19	2.49		21.30	21.10	2.22		22.43	21.76	1.93		23.57	22.40	1.67		24.68	23.02	1.42		25.77	23.62	1.17
	57 (13.9)		20.15	20.15	2.49		21.20	21.20	2.22		22.18	22.18	1.93		23.15	23.15	1.67		24.09	24.09	1.43		25.00	25.00	1.19
STAGE 3																									
75 (23.9)	72 (22.2)	**650**	15.55	6.67	1.25	**650**	16.54	7.02	1.17	**650**	17.29	7.30	1.03	**650**	18.23	7.64	0.91	**650**	19.14	7.98	0.77	**650**	20.05	8.32	0.61
	67 (19.4)		14.11	9.43	1.25		15.02	9.82	1.18		15.76	10.15	1.05		16.63	10.52	0.95		17.47	10.89	0.82		18.29	11.25	0.67
	63 (17.2)		13.09	11.60	1.25		13.94	12.02	1.19		14.67	12.38	1.06		15.47	12.78	0.97		16.26	13.17	0.85		17.02	13.56	0.71
	57 (13.9)		12.65	12.65	1.25		13.36	13.36	1.20		13.97	13.97	1.07		14.62	14.62	0.98		15.26	15.26	0.87		15.89	15.89	0.75
80 (26.7)	72 (22.2)	**650**	15.43	9.41	1.24	**650**	16.40	9.79	1.17	**650**	17.14	10.08	1.03	**650**	18.08	10.45	0.91	**650**	18.99	10.81	0.77	**650**	19.94	11.19	0.61
	67 (19.4)		14.07	12.14	1.25		14.97	12.56	1.18		15.70	12.91	1.05		16.56	13.31	0.94		17.39	13.70	0.82		18.21	14.09	0.67
	63 (17.2)		13.49	13.49	1.25		14.23	14.23	1.19		14.84	14.84	1.06		15.54	15.49	0.96		16.30	15.95	0.84		17.05	16.38	0.71
	57 (13.9)		13.47	13.47	1.25		14.20	14.20	1.19		14.81	14.81	1.06		15.50	15.50	0.96		16.17	16.17	0.85		16.81	16.81	0.72
STAGE 1																									
75 (23.9)	72 (22.2)	**650**	12.12	5.39	0.73	**650**	12.92	5.68	0.75	**585**	10.55	4.66	0.46	**585**	11.18	4.89	0.44	**585**	11.84	5.13	0.39	**585**	12.52	5.37	0.28
	67 (19.4)		10.98	7.95	0.74		11.73	8.27	0.77		9.58	6.85	0.47		10.16	7.10	0.47		10.74	7.35	0.43		11.36	7.61	0.34
	63 (17.2)		10.22	9.94	0.74		10.91	10.29	0.77		8.93	8.56	0.49		9.46	8.83	0.49		10.00	9.10	0.46		10.55	9.37	0.38
	57 (13.9)		10.14	10.14	0.74		10.74	10.74	0.78		8.82	8.82	0.49		9.29	9.29	0.50		9.75	9.75	0.47		10.21	10.21	0.40
80 (26.7)	72 (22.2)	**650**	11.99	7.94	0.73	**650**	12.79	8.25	0.75	**585**	10.41	6.81	0.46	**585**	11.06	7.06	0.44	**585**	11.73	7.32	0.38	**585**	12.41	7.59	0.28
	67 (19.4)		10.97	10.45	0.74		11.70	10.80	0.76		9.55	8.98	0.47		10.13	9.25	0.47		10.71	9.53	0.43		11.32	9.81	0.34
	63 (17.2)		10.83	10.83	0.74		11.46	11.46	0.77		9.40	9.40	0.48		9.89	9.89	0.48		10.37	10.37	0.44		10.87	10.87	0.36
	57 (13.9)		10.82	10.82	0.74		11.44	11.44	0.77		9.39	9.39	0.48		9.87	9.87	0.48		10.35	10.35	0.44		10.85	10.85	0.36

Operation in this area is restricted to maintain reliable system operation and customer comfort. The system will default to the next available stage
Stage 1 – Compressor speed limited to stage two at 105 and 115 outdoor.

See additional notes on page 26

DETAILED COOLING CAPACITIES# - EFFICIENCY MODE CONTINUED

EDB °F (°C)	EVAP. AIR	24VNA936 / FE4ANF005 Efficiency Mode Condenser Entering Air Temperature °F (°C)																							
		115 (46.1)				105 (40.5)				95 (35)				85 (29.4)				75 (23.9)				65 (18.3)			
	EWB °F (°C)	ID SCFM	Capacity MBtuh Total	Capacity MBtuh Sens‡	Total Sys. KW**	ID SCFM	Capacity MBtuh Total	Capacity MBtuh Sens‡	Total Sys. KW**	ID SCFM	Capacity MBtuh Total	Capacity MBtuh Sens‡	Total Sys. KW**	ID SCFM	Capacity MBtuh Total	Capacity MBtuh Sens‡	Total Sys. KW**	ID SCFM	Capacity MBtuh Total	Capacity MBtuh Sens‡	Total Sys. KW**	ID SCFM	Capacity MBtuh Total	Capacity MBtuh Sens‡	Total Sys. KW**
STAGE 5																									
75 (23.9)	72 (22.2)	1050	34.24	14.18	4.44	1050	36.41	14.99	3.89	1050	38.29	15.70	3.36	1050	40.30	16.47	2.87	1050	42.28	17.24	2.41	1050	44.18	17.98	1.98
	67 (19.4)		31.38	19.07	4.38		33.35	19.95	3.85		35.13	20.75	3.34		36.99	21.60	2.87		38.79	22.42	2.43		40.52	23.22	2.02
	63 (17.2)		29.21	22.90	4.33		31.07	23.84	3.81		32.74	24.70	3.31		34.48	25.59	2.86		36.17	26.47	2.44		37.79	27.32	2.04
	57 (13.9)		27.05	27.05	4.27		28.50	28.50	3.77		29.85	29.85	3.28		31.20	31.20	2.84		32.65	32.25	2.44		34.08	33.21	2.06
80 (26.7)	72 (22.2)	1050	34.04	18.92	4.44	1050	36.21	19.79	3.88	1050	38.09	20.56	3.35	1050	40.10	21.39	2.86	1050	42.08	22.22	2.41	1050	43.98	23.01	1.98
	67 (19.4)		31.25	23.78	4.38		33.23	24.72	3.84		35.00	25.57	3.33		36.86	26.47	2.86		38.66	27.35	2.42		40.39	28.21	2.02
	63 (17.2)		29.21	27.55	4.33		31.05	28.56	3.81		32.70	29.48	3.31		34.43	30.44	2.86		36.11	31.38	2.43		37.72	32.28	2.04
	57 (13.9)		28.61	28.61	4.32		30.14	30.14	3.80		31.53	31.53	3.30		32.95	32.95	2.85		34.31	34.31	2.44		35.64	35.64	2.05
STAGE 3																									
75 (23.9)	72 (22.2)	900	21.81	9.32	1.96	900	23.25	9.85	1.83	900	24.29	10.24	1.67	900	25.66	10.75	1.50	900	27.01	11.26	1.31	900	28.33	11.75	1.10
	67 (19.4)		19.85	13.12	1.96		21.18	13.71	1.84		22.21	14.19	1.68		23.48	14.77	1.52		24.72	15.33	1.35		25.94	15.89	1.15
	63 (17.2)		18.41	16.08	1.95		19.66	16.73	1.85		20.68	17.29	1.68		21.87	17.91	1.54		23.02	18.53	1.37		24.16	19.14	1.19
	57 (13.9)		17.71	17.71	1.95		18.75	18.75	1.85		19.63	19.63	1.68		20.61	20.61	1.54		21.57	21.57	1.39		22.50	22.50	1.22
80 (26.7)	72 (22.2)	900	21.64	13.06	1.95	900	23.07	13.65	1.83	900	24.08	14.08	1.66	900	25.46	14.65	1.49	900	26.81	15.21	1.31	900	28.13	15.76	1.10
	67 (19.4)		19.77	16.83	1.95		21.09	17.48	1.84		22.11	18.01	1.67		23.37	18.64	1.52		24.60	19.26	1.35		25.82	19.87	1.15
	63 (17.2)		18.86	18.86	1.95		19.95	19.95	1.84		20.82	20.82	1.68		21.94	21.67	1.53		23.07	22.38	1.37		24.19	23.06	1.19
	57 (13.9)		18.83	18.83	1.95		19.91	19.91	1.84		20.79	20.79	1.68		21.82	21.82	1.53		22.82	22.82	1.37		23.80	23.80	1.20
STAGE 1																									
75 (23.9)	72 (22.2)	800	14.74	6.58	0.98	800	15.80	6.96	1.00	600	10.82	4.81	0.48	600	11.57	5.09	0.46	600	12.38	5.38	0.39	600	13.21	5.69	0.27
	67 (19.4)		13.36	9.71	0.98		14.34	10.16	1.02		9.83	7.10	0.49		10.52	7.42	0.49		11.24	7.76	0.44		11.99	8.11	0.34
	63 (17.2)		12.47	12.13	0.98		13.37	12.65	1.03		9.17	8.88	0.51		9.81	9.25	0.51		10.45	9.62	0.47		11.13	10.00	0.38
	57 (13.9)		12.37	12.37	0.98		13.18	13.18	1.03		9.09	9.09	0.51		9.66	9.66	0.52		10.22	10.22	0.48		10.81	10.81	0.40
80 (26.7)	72 (22.2)	800	14.58	9.69	0.97	800	15.63	10.12	1.00	600	10.67	7.06	0.47	600	11.46	7.39	0.46	600	12.27	7.73	0.39	600	13.08	8.07	0.27
	67 (19.4)		13.36	12.75	0.98		14.32	13.27	1.02		9.80	9.32	0.49		10.49	9.70	0.49		11.21	10.08	0.44		11.95	10.47	0.34
	63 (17.2)		13.20	13.20	0.98		14.04	14.04	1.02		9.68	9.68	0.49		10.28	10.28	0.49		10.89	10.89	0.45		11.52	11.52	0.36
	57 (13.9)		13.18	13.18	0.98		14.02	14.02	1.02		9.67	9.67	0.49		10.26	10.26	0.49		10.87	10.87	0.45		11.50	11.50	0.36

Operation in this area is restricted to maintain reliable system operation and customer comfort. The system will default to the next available stage
Stage 1 – Compressor speed limited to stage two at 105 and 115 outdoor.

See additional notes on page 26

DETAILED COOLING CAPACITIES# - EFFICIENCY MODE CONTINUED

EDB °F (°C)	EVAP. AIR	24VNA937 / FE4ANB006L Efficiency Mode Condenser Entering Air Temperature °F (°C)																							
		115 (46.1)				105 (40.5)				95 (35)				85 (29.4)				75 (23.9)				65 (18.3)			
	EWB °F (°C)	ID SCFM	Capacity MBtuh Total	Capacity MBtuh Sens‡	Total Sys. KW**	ID SCFM	Capacity MBtuh Total	Capacity MBtuh Sens‡	Total Sys. KW**	ID SCFM	Capacity MBtuh Total	Capacity MBtuh Sens‡	Total Sys. KW**	ID SCFM	Capacity MBtuh Total	Capacity MBtuh Sens‡	Total Sys. KW**	ID SCFM	Capacity MBtuh Total	Capacity MBtuh Sens‡	Total Sys. KW**	ID SCFM	Capacity MBtuh Total	Capacity MBtuh Sens‡	Total Sys. KW**
STAGE 5																									
75 (23.9)	72 (22.2)	1050	32.70	13.63	3.49	1050	34.98	14.48	3.05	1050	37.03	15.26	2.59	1050	39.26	16.11	2.21	1050	41.44	16.95	1.86	1050	43.61	17.78	1.54
	67 (19.4)		31.53	19.22	3.08		31.81	19.44	3.03		33.70	20.30	2.58		35.71	21.22	2.21		37.69	22.14	1.87		39.65	23.05	1.56
	63 (17.2)		27.56	22.33	3.44		29.48	23.32	3.02		31.25	24.26	2.58		33.12	25.24	2.21		34.94	26.21	1.88		36.75	27.17	1.58
	57 (13.9)		25.78	25.78	3.41		27.31	27.31	3.00		28.73	28.73	2.56		30.19	30.19	2.21		31.62	31.62	1.89		33.01	33.01	1.61
80 (26.7)	72 (22.2)	1050	32.58	18.47	3.49	1050	34.86	19.41	3.05	1050	36.91	20.26	2.59	1050	39.14	21.19	2.21	1050	41.32	22.11	1.86	1050	43.48	23.02	1.54
	67 (19.4)		31.43	24.01	3.08		31.71	24.30	3.03		33.60	25.24	2.58		35.61	26.24	2.21		37.59	27.23	1.87		39.55	28.22	1.56
	63 (17.2)		27.61	27.02	3.44		29.49	28.13	3.02		31.23	29.15	2.58		33.10	30.22	2.21		34.91	31.27	1.88		36.70	32.31	1.58
	57 (13.9)		27.36	27.36	3.44		28.98	28.98	3.01		30.45	30.45	2.57		32.00	32.00	2.21		33.49	33.49	1.89		34.96	34.96	1.59
STAGE 3																									
75 (23.9)	72 (22.2)	900	22.96	9.72	2.41	900	24.70	10.37	2.11	900	26.36	10.99	1.76	900	28.08	11.65	1.50	900	29.77	12.29	1.25	900	31.45	12.93	1.03
	67 (19.4)		20.81	13.49	2.42		22.39	14.22	2.13		23.90	14.93	1.79		25.43	15.65	1.54		26.95	16.37	1.30		28.46	17.09	1.08
	63 (17.2)		19.24	16.44	2.42		20.68	17.23	2.14		22.09	18.01	1.80		23.50	18.79	1.56		24.89	19.57	1.34		26.28	20.35	1.13
	57 (13.9)		18.34	18.34	2.42		19.54	19.54	2.15		20.70	20.70	1.82		21.85	21.85	1.58		22.98	22.98	1.37		24.10	24.10	1.17
80 (26.7)	72 (22.2)	900	22.86	13.49	2.41	900	24.60	14.23	2.11	900	26.26	14.93	1.76	900	27.98	15.67	1.50	900	29.67	16.39	1.25	900	31.35	17.12	1.03
	67 (19.4)		20.74	17.22	2.42		22.31	18.03	2.13		23.83	18.82	1.79		25.36	19.62	1.54		26.87	20.42	1.30		28.38	21.22	1.08
	63 (17.2)		19.57	19.57	2.42		20.83	20.83	2.14		22.16	21.83	1.80		23.54	22.72	1.56		24.92	23.58	1.33		26.29	24.45	1.12
	57 (13.9)		19.53	19.53	2.42		20.79	20.79	2.14		22.01	22.01	1.80		23.22	23.22	1.56		24.42	24.42	1.34		25.59	25.59	1.14
STAGE 1																									
75 (23.9)	72 (22.2)	800	18.16	7.73	1.96	800	19.62	8.28	1.73	600	15.04	6.28	0.87	600	16.16	6.71	0.72	600	17.28	7.14	0.57	600	18.39	7.57	0.43
	67 (19.4)		16.42	10.82	1.98		17.74	11.45	1.76		13.64	8.56	0.91		14.65	9.05	0.76		15.65	9.54	0.62		16.65	10.04	0.49
	63 (17.2)		15.19	13.25	1.99		16.40	13.94	1.77		12.63	10.35	0.93		13.55	10.90	0.80		14.47	11.44	0.66		15.39	11.99	0.53
	57 (13.9)		14.59	14.59	1.99		15.61	15.61	1.78		11.87	11.87	0.95		12.64	12.64	0.82		13.40	13.40	0.70		14.16	14.16	0.58
80 (26.7)	72 (22.2)	800	18.08	10.84	1.96	800	19.54	11.47	1.73	600	14.98	8.55	0.87	600	16.10	9.05	0.72	600	17.22	9.55	0.57	600	18.33	10.05	0.43
	67 (19.4)		16.38	13.89	1.98		17.69	14.60	1.75		13.60	10.81	0.91		14.60	11.37	0.76		15.60	11.94	0.62		16.60	12.50	0.49
	63 (17.2)		15.57	15.57	1.99		16.66	16.66	1.77		12.67	12.58	0.93		13.57	13.20	0.79		14.48	13.82	0.66		15.39	14.44	0.53
	57 (13.9)		15.54	15.54	1.99		16.63	16.63	1.77		12.62	12.62	0.93		13.43	13.43	0.80		14.23	14.23	0.67		15.04	15.04	0.54

Operation in this area is restricted to maintain reliable system operation and customer comfort. The system will default to the next available stage
Stage 1 – Compressor speed limited to stage two at 105 and 115 outdoor.

See additional notes on page 26

DETAILED COOLING CAPACITIES# - EFFICIENCY MODE CONTINUED

EDB °F (°C)	EVAP. AIR	24VNA948 / FE4BNB006 Efficiency Mode Condenser Entering Air Temperature °F (°C)																							
		115 (46.1)				105 (40.5)				95 (35)				85 (29.4)				75 (23.9)				65 (18.3)			
	EWB °F (°C)	ID SCFM	Capacity MBtuh		Total Sys. KW**	ID SCFM	Capacity MBtuh		Total Sys. KW**	ID SCFM	Capacity MBtuh		Total Sys. KW**	ID SCFM	Capacity MBtuh		Total Sys. KW**	ID SCFM	Capacity MBtuh		Total Sys. KW**	ID SCFM	Capacity MBtuh		Total Sys. KW**
			Total	Sens‡			Total	Sens‡			Total	Sens‡			Total	Sens‡			Total	Sens‡			Total	Sens‡	
STAGE 5																									
75 (23.9)	72 (22.2)	1400	44.82	18.57	5.52	1400	47.96	19.76	4.88	1400	50.99	20.91	4.29	1400	53.98	22.06	3.74	1400	56.89	23.19	3.23	1400	59.70	24.29	2.75
	67 (19.4)		40.99	24.95	5.42		43.86	26.26	4.80		46.65	27.54	4.23		49.36	28.80	3.70		52.01	30.04	3.21		54.60	31.27	2.75
	63 (17.2)		38.13	29.97	5.34		40.79	31.36	4.74		43.37	32.72	4.18		45.91	34.07	3.67		48.37	35.40	3.19		50.78	36.72	2.74
	57 (13.9)		35.29	35.29	5.26		37.41	37.41	4.66		39.46	39.46	4.12		41.45	41.45	3.62		43.58	43.09	3.16		45.70	44.59	2.73
80 (26.7)	72 (22.2)	1400	44.60	24.79	5.51	1400	47.74	26.09	4.88	1400	50.77	27.36	4.28	1400	53.76	28.62	3.73	1400	56.66	29.86	3.22	1400	59.48	31.07	2.75
	67 (19.4)		40.84	31.14	5.42		43.71	32.55	4.80		46.50	33.94	4.23		49.21	35.31	3.70		51.86	36.65	3.20		54.45	37.98	2.75
	63 (17.2)		38.13	36.06	5.34		40.76	37.59	4.74		43.33	39.07	4.18		45.84	40.54	3.67		48.30	41.98	3.18		50.70	43.40	2.74
	57 (13.9)		37.36	37.36	5.32		39.59	39.59	4.72		41.72	41.72	4.16		43.81	43.81	3.64		45.84	45.84	3.17		47.82	47.82	2.73
STAGE 3																									
75 (23.9)	72 (22.2)	1200	29.42	12.62	2.82	1200	31.60	13.43	2.56	1200	33.63	14.20	2.26	1200	35.75	15.00	2.00	1200	37.82	15.78	1.74	1200	39.85	16.55	1.49
	67 (19.4)		26.82	17.86	2.80		28.83	18.79	2.56		30.73	19.68	2.27		32.66	20.60	2.02		34.57	21.50	1.77		36.44	22.40	1.52
	63 (17.2)		24.93	21.96	2.79		26.79	22.99	2.55		28.58	23.99	2.26		30.39	25.00	2.02		32.16	26.00	1.78		33.91	26.99	1.55
	57 (13.9)		24.03	24.03	2.78		25.61	25.61	2.55		27.12	27.12	2.26		28.62	28.62	2.03		30.11	30.11	1.80		31.55	31.55	1.57
80 (26.7)	72 (22.2)	1200	29.22	17.78	2.81	1200	31.39	18.70	2.55	1200	33.41	19.57	2.25	1200	35.52	20.47	2.00	1200	37.60	21.37	1.74	1200	39.62	22.25	1.48
	67 (19.4)		26.71	22.96	2.80		28.71	24.01	2.56		30.60	25.01	2.26		32.52	26.03	2.01		34.42	27.05	1.77		36.30	28.05	1.52
	63 (17.2)		25.56	25.56	2.80		27.23	27.23	2.55		28.80	28.80	2.26		30.48	30.24	2.02		32.21	31.42	1.78		33.93	32.55	1.55
	57 (13.9)		25.52	25.52	2.80		27.19	27.19	2.55		28.76	28.76	2.26		30.35	30.35	2.02		31.90	31.90	1.78		33.43	33.43	1.55
STAGE 1																									
75 (23.9)	72 (22.2)	1100	25.50	10.99	2.21	1100	27.46	11.73	2.07	875	19.62	8.56	0.95	875	20.96	9.06	0.84	875	22.29	9.57	0.72	875	23.61	10.07	0.57
	67 (19.4)		23.22	15.65	2.21		25.04	16.51	2.08		17.88	12.38	0.98		19.11	12.99	0.88		20.32	13.60	0.76		21.53	14.21	0.62
	63 (17.2)		21.57	19.30	2.21		23.24	20.26	2.08		16.68	15.37	1.00		17.82	16.07	0.90		18.95	16.77	0.79		20.07	17.46	0.66
	57 (13.9)		20.89	20.89	2.20		22.32	22.32	2.08		16.33	16.33	1.00		17.34	17.34	0.91		18.34	18.34	0.81		19.33	19.33	0.68
80 (26.7)	72 (22.2)	1100	25.31	15.59	2.21	1100	27.26	16.44	2.06	875	19.42	12.31	0.95	875	20.76	12.92	0.84	875	22.09	13.52	0.71	875	23.43	14.14	0.57
	67 (19.4)		23.13	20.20	2.21		24.93	21.18	2.07		17.82	16.09	0.98		19.04	16.80	0.88		20.25	17.51	0.76		21.44	18.21	0.62
	63 (17.2)		22.25	22.25	2.21		23.77	23.77	2.08		17.35	17.35	0.98		18.41	18.41	0.89		19.46	19.46	0.78		20.50	20.50	0.65
	57 (13.9)		22.21	22.21	2.21		23.73	23.73	2.08		17.32	17.32	0.98		18.39	18.39	0.89		19.43	19.43	0.78		20.47	20.47	0.65

Operation in this area is restricted to maintain reliable system operation and customer comfort. The system will default to the next available stage
Stage 1 – Compressor speed limited to stage two at 105 and 115 outdoor.

See additional notes on page 26

DETAILED COOLING CAPACITIES# - EFFICIENCY MODE CONTINUED

EDB °F (°C)	EVAP. AIR EWB °F (°C)	24VNA949 / *CNPV*6024AL* Efficiency Mode Condenser Entering Air Temperature °F (°C)																							
		115 (46.1)				105 (40.5)				95 (35)				85 (29.4)				75 (23.9)				65 (18.3)			
		ID SCFM	Capacity MBtuh		Total Sys. KW**	ID SCFM	Capacity MBtuh		Total Sys. KW**	ID SCFM	Capacity MBtuh		Total Sys. KW**	ID SCFM	Capacity MBtuh		Total Sys. KW**	ID SCFM	Capacity MBtuh		Total Sys. KW**	ID SCFM	Capacity MBtuh		Total Sys. KW**
			Total	Sens‡			Total	Sens‡			Total	Sens‡			Total	Sens‡			Total	Sens‡			Total	Sens‡	
STAGE 5																									
75 (23.9)	72 (22.2)	1200	45.15	18.59	4.64	1200	47.22	19.34	4.10	1200	49.13	20.04	3.62	1200	50.85	20.69	3.20	1200	52.44	21.29	2.83	1200	53.90	21.86	2.50
	67 (19.4)		40.99	24.58	4.57		42.88	25.28	4.03		44.59	25.92	3.56		46.15	26.50	3.14		47.59	27.05	2.77		48.89	27.54	2.45
	63 (17.2)		37.94	29.29	4.53		39.67	29.93	3.99		41.26	30.52	3.52		42.70	31.05	3.10		44.02	31.54	2.74		45.22	31.98	2.42
	57 (13.9)		34.94	34.94	4.48		36.17	36.17	3.94		37.25	37.25	3.47		38.39	37.79	3.05		39.47	38.20	2.69		40.46	38.55	2.38
80 (26.7)	72 (22.2)	1200	45.05	24.59	4.65	1200	47.12	25.29	4.10	1200	49.03	25.93	3.62	1200	50.75	26.52	3.20	1200	52.34	27.07	2.83	1200	53.80	27.58	2.50
	67 (19.4)		40.90	30.52	4.57		42.79	31.16	4.03		44.50	31.73	3.56		46.06	32.26	3.14		47.51	32.74	2.77		48.81	33.18	2.45
	63 (17.2)		38.05	35.23	4.53		39.74	35.81	3.99		41.31	36.35	3.52		42.73	36.82	3.10		44.03	37.24	2.74		45.22	37.62	2.42
	57 (13.9)		37.10	37.10	4.51		38.37	38.37	3.97		39.51	39.51	3.50		40.51	40.51	3.08		41.42	41.42	2.71		42.21	42.21	2.39
STAGE 3																									
75 (23.9)	72 (22.2)	1100	31.12	13.04	2.69	1100	33.04	13.72	2.42	1100	34.76	14.34	2.13	1100	36.52	14.98	1.89	1100	38.19	15.60	1.67	1100	39.82	16.21	1.47
	67 (19.4)		27.98	17.71	2.68		29.74	18.37	2.42		31.35	18.98	2.12		32.93	19.60	1.88		34.47	20.20	1.67		35.92	20.78	1.46
	63 (17.2)		25.70	21.37	2.67		27.30	22.01	2.41		28.81	22.61	2.11		30.27	23.20	1.88		31.66	23.76	1.67		33.00	24.31	1.47
	57 (13.9)		24.22	24.22	2.66		25.43	25.43	2.41		26.54	26.54	2.11		27.60	27.60	1.88		28.59	28.59	1.67		29.51	29.51	1.47
80 (26.7)	72 (22.2)	1100	31.03	17.82	2.69	1100	32.96	18.48	2.42	1100	34.67	19.07	2.13	1100	36.43	19.69	1.89	1100	38.11	20.29	1.67	1100	39.73	20.88	1.47
	67 (19.4)		27.94	22.44	2.68		29.69	23.08	2.42		31.28	23.67	2.12		32.86	24.25	1.88		34.39	24.83	1.67		35.84	25.38	1.46
	63 (17.2)		25.99	25.99	2.67		27.49	26.68	2.41		28.94	27.28	2.11		30.37	27.85	1.88		31.74	28.40	1.67		33.06	28.93	1.47
	57 (13.9)		25.95	25.95	2.67		27.20	27.20	2.41		28.35	28.35	2.11		29.45	29.45	1.88		30.47	30.47	1.67		31.45	31.45	1.47
STAGE 1																									
75 (23.9)	72 (22.2)	1100	24.22	10.36	1.81	1100	26.07	11.01	1.70	875	22.44	9.23	0.80	875	22.15	9.12	0.98	875	23.77	9.73	0.84	875	25.39	10.35	0.64
	67 (19.4)		21.60	14.43	1.81		23.29	15.08	1.71		18.32	11.38	1.06		19.80	12.00	0.98		21.26	12.62	0.84		22.74	13.26	0.66
	63 (17.2)		19.74	17.61	1.80		21.27	18.26	1.71		16.73	13.62	1.05		18.09	14.24	0.98		19.44	14.88	0.85		20.79	15.51	0.67
	57 (13.9)		19.08	19.08	1.80		20.28	20.28	1.71		15.60	15.60	1.05		16.63	16.63	0.98		17.64	17.64	0.86		18.62	18.62	0.70
80 (26.7)	72 (22.2)	1100	24.14	14.58	1.81	1100	25.99	15.23	1.70	875	20.47	11.51	1.08	875	22.08	12.12	0.98	875	23.71	12.75	0.84	875	25.33	13.38	0.64
	67 (19.4)		21.61	18.61	1.81		23.27	19.26	1.71		18.30	14.33	1.06		19.76	14.96	0.98		21.22	15.60	0.84		22.70	16.25	0.66
	63 (17.2)		20.60	20.60	1.80		21.86	21.86	1.71		16.89	16.55	1.06		18.19	17.21	0.98		19.52	17.86	0.85		20.85	18.52	0.67
	57 (13.9)		20.56	20.56	1.80		21.82	21.82	1.71		16.76	16.76	1.05		17.83	17.83	0.98		18.88	18.88	0.85		19.90	19.90	0.68

Operation in this area is restricted to maintain reliable system operation and customer comfort. The system will default to the next available stage
Stage 1 – Compressor speed limited to stage two at 105 and 115 outdoor.

See additional notes on page 26

DETAILED COOLING CAPACITIES# - EFFICIENCY MODE CONTINUED

EDB °F (°C)	EVAP. AIR	24VNA960 / FE4BNB006L Efficiency Mode Condenser Entering Air Temperature °F (°C)																							
		115 (46.1)				105 (40.5)				95 (35)				85 (29.4)				75 (23.9)				65 (18.3)			
	EWB °F (°C)	ID SCFM	Capacity MBtuh		Total Sys. KW**	ID SCFM	Capacity MBtuh		Total Sys. KW**	ID SCFM	Capacity MBtuh		Total Sys. KW**	ID SCFM	Capacity MBtuh		Total Sys. KW**	ID SCFM	Capacity MBtuh		Total Sys. KW**	ID SCFM	Capacity MBtuh		Total Sys. KW**
			Total	Sens‡			Total	Sens‡			Total	Sens‡			Total	Sens‡			Total	Sens‡			Total	Sens‡	
STAGE 5																									
75 (23.9)	72 (22.2)	1600	55.38	22.79	7.70	1600	59.00	24.17	6.73	1600	62.54	25.53	5.88	1600	65.96	26.86	5.13	1600	69.30	28.16	4.47	1600	72.59	29.46	3.89
	67 (19.4)		50.63	30.18	7.50		53.95	31.68	6.54		57.12	33.14	5.70		60.22	34.57	4.96		63.25	35.99	4.32		66.21	37.38	3.75
	63 (17.2)		47.11	36.00	7.35		50.18	37.58	6.40		53.13	39.12	5.57		55.99	40.62	4.84		58.78	42.11	4.21		61.52	43.58	3.65
	57 (13.9)		43.16	43.16	7.19		45.55	45.55	6.23		47.97	47.63	5.40		50.44	49.37	4.69		52.86	51.01	4.06		55.26	52.62	3.52
80 (26.7)	72 (22.2)	1600	55.24	30.04	7.70	1600	58.86	31.53	6.73	1600	62.40	33.00	5.88	1600	65.82	34.44	5.13	1600	69.15	35.85	4.47	1600	72.44	37.26	3.89
	67 (19.4)		50.50	37.37	7.50		53.83	38.98	6.54		57.00	40.53	5.70		60.10	42.07	4.96		63.13	43.59	4.32		66.10	45.08	3.75
	63 (17.2)		47.09	43.10	7.35		50.13	44.81	6.40		53.07	46.46	5.57		55.91	48.08	4.84		58.70	49.67	4.21		61.44	51.25	3.65
	57 (13.9)		45.62	45.62	7.29		48.12	48.12	6.33		50.51	50.51	5.49		52.83	52.83	4.76		55.06	55.06	4.12		57.24	57.24	3.56
STAGE 3																									
75 (23.9)	72 (22.2)	1350	35.94	15.07	3.39	1350	38.40	15.98	3.08	1350	40.44	16.73	2.76	1350	42.79	17.61	2.51	1350	45.10	18.48	2.29	1350	47.36	19.34	2.08
	67 (19.4)		32.49	20.54	3.35		34.72	21.48	3.05		36.67	22.32	2.72		38.80	23.24	2.47		40.88	24.15	2.24		42.94	25.05	2.04
	63 (17.2)		29.95	24.83	3.33		32.01	25.81	3.03		33.87	26.70	2.69		35.85	27.65	2.44		37.78	28.59	2.22		39.68	29.52	2.01
	57 (13.9)		28.14	28.14	3.32		29.76	29.76	3.02		31.24	31.24	2.67		32.75	32.75	2.42		34.21	34.21	2.19		35.65	35.65	1.99
80 (26.7)	72 (22.2)	1350	35.82	20.59	3.39	1350	38.29	21.54	3.08	1350	40.32	22.34	2.76	1350	42.67	23.26	2.51	1350	44.98	24.17	2.29	1350	47.24	25.07	2.08
	67 (19.4)		32.39	26.01	3.35		34.62	26.99	3.05		36.56	27.87	2.72		38.70	28.83	2.47		40.78	29.77	2.24		42.84	30.72	2.04
	63 (17.2)		30.07	30.04	3.29		32.09	31.18	3.03		33.90	32.16	2.69		35.85	33.17	2.44		37.76	34.16	2.22		39.65	35.14	2.01
	57 (13.9)		30.02	30.02	3.33		31.70	31.70	3.03		33.22	33.22	2.68		34.80	34.80	2.43		36.33	36.33	2.21		37.82	37.82	2.00
STAGE 1																									
75 (23.9)	72 (22.2)	1200	26.64	11.34	1.89	1200	28.56	12.02	1.84	975	20.89	8.78	1.03	975	22.26	9.26	1.00	975	23.59	9.73	0.91	975	24.89	10.21	0.75
	67 (19.4)		23.86	15.71	1.89		25.60	16.40	1.84		18.63	11.93	1.02		19.89	12.40	1.00		21.11	12.85	0.92		22.30	13.31	0.77
	63 (17.2)		21.85	19.14	1.89		23.45	19.83	1.84		16.95	14.38	1.01		18.11	14.83	1.00		19.24	15.26	0.92		20.34	15.69	0.79
	57 (13.9)		20.91	20.91	1.88		22.14	22.14	1.84		15.97	15.97	1.01		16.81	16.81	1.00		17.62	17.62	0.94		18.38	18.38	0.81
80 (26.7)	72 (22.2)	1200	26.55	15.84	1.89	1200	28.46	16.52	1.84	975	20.81	12.06	1.03	975	22.18	12.52	1.00	975	23.51	12.97	0.91	975	24.81	13.42	0.75
	67 (19.4)		23.79	20.16	1.89		25.52	20.85	1.84		18.58	15.17	1.02		19.83	15.62	1.00		21.05	16.05	0.92		22.24	16.48	0.77
	63 (17.2)		22.48	22.48	1.89		23.77	23.77	1.84		17.25	17.25	1.01		18.20	17.98	1.00		19.28	18.43	0.92		20.35	18.85	0.79
	57 (13.9)		22.44	22.44	1.89		23.72	23.72	1.84		17.21	17.21	1.01		18.08	18.08	1.00		18.91	18.91	0.93		19.70	19.70	0.80

Operation in this area is restricted to maintain reliable system operation and customer comfort. The system will default to the next available stage
Stage 1 – Compressor speed limited to stage two at 105 and 115 outdoor.

See additional notes on page 26

DETAILED COOLING CAPACITIES# - COMFORT + DEHUMIDIFY MODE

EDB °F (°C)	EVAP. AIR	24VNA913 / FE4ANF002L Comfort + Dehumidify Mode Condenser Entering Air Temperature °F (°C)																			
		105 (40.5)				95 (35)				85 (29.4)				75 (23.9)				65 (18.3)			
	EWB °F (°C)	ID SCFM	Capacity MBtuh Total	Capacity MBtuh Sens‡	Total Sys. KW	ID SCFM	Capacity MBtuh Total	Capacity MBtuh Sens‡	Total Sys. KW	ID SCFM	Capacity MBtuh Total	Capacity MBtuh Sens‡	Total Sys. KW	ID SCFM	Capacity MBtuh Total	Capacity MBtuh Sens‡	Total Sys. KW	ID SCFM	Capacity MBtuh Total	Capacity MBtuh Sens‡	Total Sys. KW
STAGE 5																					
75 (23.9)	72 (22.2)	360	13.14	5.38	1.16	420	14.21	5.86	0.98	420	15.07	6.18	0.81	420	15.92	6.51	0.65	420	16.76	6.83	0.50
	67 (19.4)		11.86	7.01	1.16		12.84	7.79	0.98		13.61	8.13	0.82		14.37	8.46	0.67		15.11	8.79	0.53
	63 (17.2)		10.91	8.29	1.16		11.83	9.30	0.99		12.53	9.64	0.83		13.22	9.98	0.69		13.89	10.32	0.56
	57 (13.9)		9.88	9.88	1.16		10.89	10.89	0.99		11.42	11.42	0.84		11.93	11.93	0.71		12.42	12.42	0.59
80 (26.7)	72 (22.2)	360	13.10	7.04	1.16	420	14.16	7.81	0.98	420	15.02	8.15	0.81	420	15.87	8.49	0.65	420	16.71	8.83	0.50
	67 (19.4)		11.82	8.65	1.16		12.80	9.71	0.98		13.57	10.07	0.82		14.33	10.42	0.67		15.07	10.76	0.53
	63 (17.2)		10.90	9.92	1.16		11.84	11.20	0.99		12.54	11.57	0.83		13.22	11.93	0.69		13.88	12.28	0.56
	57 (13.9)		10.51	10.51	1.16		11.59	11.59	0.99		12.16	12.16	0.83		12.70	12.70	0.70		13.22	13.22	0.57
STAGE 3																					
75 (23.9)	72 (22.2)	300	10.85	4.45	0.90	360	11.86	4.92	0.77	360	12.61	5.20	0.65	360	13.33	5.47	0.54	360	14.04	5.74	0.43
	67 (19.4)		9.75	5.82	0.91		10.67	6.59	0.78		11.33	6.88	0.68		11.97	7.17	0.57		12.60	7.45	0.47
	63 (17.2)		8.96	6.90	0.91		9.81	7.90	0.79		10.40	8.20	0.69		10.98	8.49	0.60		11.55	8.78	0.50
	57 (13.9)		8.17	8.17	0.92		9.13	9.13	0.79		9.58	9.58	0.71		10.02	10.02	0.62		10.45	10.45	0.53
80 (26.7)	72 (22.2)	300	10.82	5.86	0.90	360	11.82	6.62	0.77	360	12.56	6.92	0.65	360	13.29	7.21	0.54	360	14.00	7.50	0.43
	67 (19.4)		9.73	7.22	0.91		10.64	8.28	0.78		11.30	8.59	0.68		11.94	8.89	0.57		12.57	9.19	0.47
	63 (17.2)		8.97	8.29	0.91		9.84	9.57	0.79		10.42	9.89	0.69		10.99	10.21	0.60		11.56	10.52	0.50
	57 (13.9)		8.70	8.70	0.91		9.73	9.73	0.79		10.22	10.22	0.69		10.68	10.68	0.60		11.14	11.14	0.51
STAGE 1																					
75 (23.9)	72 (22.2)	300	9.87	4.09	0.77	300	8.43	3.60	0.51	300	9.04	3.82	0.45	300	9.66	4.05	0.37	300	10.27	4.28	0.28
	67 (19.4)		8.87	5.49	0.78		7.60	5.04	0.52		8.15	5.28	0.46		8.69	5.52	0.39		9.22	5.76	0.32
	63 (17.2)		8.15	6.59	0.78		7.00	6.18	0.52		7.50	6.43	0.47		7.98	6.68	0.41		8.45	6.93	0.34
	57 (13.9)		7.59	7.59	0.78		6.74	6.74	0.52		7.15	7.15	0.47		7.53	7.53	0.42		7.89	7.89	0.36
80 (26.7)	72 (22.2)	300	9.83	5.52	0.77	300	8.39	5.05	0.51	300	9.00	5.30	0.45	300	9.62	5.55	0.37	300	10.23	5.80	0.28
	67 (19.4)		8.84	6.90	0.78		7.58	6.49	0.52		8.13	6.75	0.46		8.67	7.01	0.39		9.19	7.27	0.32
	63 (17.2)		8.17	7.99	0.78		7.22	7.22	0.52		7.65	7.65	0.47		8.07	8.07	0.41		8.49	8.42	0.34
	57 (13.9)		8.09	8.09	0.78		7.21	7.21	0.52		7.64	7.64	0.47		8.05	8.05	0.41		8.45	8.45	0.34

Operation in this area is restricted to maintain reliable system operation and customer comfort. The system will default to the next available stage
Stage 1 – Compressor speed limited to stage two at 105 outdoor.

See additional notes on page 26

DETAILED COOLING CAPACITIES# - COMFORT + DEHUMIDIFY MODE CONTINUED

EDB °F (°C)	EVAP. AIR	24VNA924B / FE4ANF002L Comfort + Dehumidify Mode Condenser Entering Air Temperature °F (°C)																			
		105 (40.5)				95 (35)				85 (29.4)				75 (23.9)				65 (18.3)			
	EWB °F (°C)	ID SCFM	Capacity MBtuh Total	Capacity MBtuh Sens‡	Total Sys. KW	ID SCFM	Capacity MBtuh Total	Capacity MBtuh Sens‡	Total Sys. KW	ID SCFM	Capacity MBtuh Total	Capacity MBtuh Sens‡	Total Sys. KW	ID SCFM	Capacity MBtuh Total	Capacity MBtuh Sens‡	Total Sys. KW	ID SCFM	Capacity MBtuh Total	Capacity MBtuh Sens‡	Total Sys. KW
STAGE 5																					
75 (23.9)	72 (22.2)	642	24.23	9.92	2.44	608	25.33	10.31	2.12	634	26.93	10.95	1.84	663	28.54	11.60	1.58	708	30.28	12.32	1.33
	67 (19.4)		22.01	12.96	2.42		23.01	13.22	2.10		24.45	14.00	1.83		25.91	14.82	1.58		27.51	15.77	1.34
	63 (17.2)		20.38	15.34	2.39		21.31	15.50	2.08		22.64	16.40	1.82		24.00	17.33	1.57		25.48	18.47	1.35
	57 (13.9)		18.45	18.45	2.36		19.08	18.80	2.05		20.28	19.87	1.80		21.49	20.99	1.57		22.82	22.37	1.36
80 (26.7)	72 (22.2)	642	24.17	12.95	2.44	608	25.27	13.22	2.12	634	26.87	14.00	1.84	663	28.48	14.82	1.58	708	30.22	15.77	1.33
	67 (19.4)		21.96	15.96	2.42		22.96	16.09	2.10		24.40	17.02	1.83		25.86	17.99	1.58		27.45	19.17	1.34
	63 (17.2)		20.36	18.31	2.39		21.28	18.35	2.08		22.61	19.39	1.82		23.97	20.49	1.57		25.45	21.85	1.35
	57 (13.9)		19.56	19.56	2.38		20.08	20.08	2.07		21.29	21.29	1.81		22.54	22.54	1.57		23.97	23.97	1.35
STAGE 3																					
75 (23.9)	72 (22.2)	437	16.80	6.88	1.49	415	17.53	7.13	1.28	437	18.69	7.60	1.10	456	19.82	8.06	0.92	484	21.04	8.55	0.76
	67 (19.4)		15.18	8.96	1.50		15.85	9.13	1.28		16.89	9.72	1.11		17.91	10.28	0.95		18.99	10.93	0.79
	63 (17.2)		13.98	10.59	1.50		14.60	10.69	1.28		15.56	11.37	1.13		16.49	12.01	0.97		17.48	12.77	0.82
	57 (13.9)		12.63	12.63	1.49		12.99	12.94	1.29		13.83	13.75	1.14		14.64	14.51	1.00		15.53	15.43	0.86
80 (26.7)	72 (22.2)	437	16.75	8.99	1.49	415	17.48	9.16	1.28	437	18.64	9.75	1.10	456	19.77	10.32	0.92	484	20.98	10.97	0.76
	67 (19.4)		15.14	11.05	1.50		15.81	11.13	1.28		16.85	11.84	1.11		17.87	12.51	0.95		18.95	13.31	0.79
	63 (17.2)		13.97	12.66	1.50		14.59	12.68	1.28		15.54	13.48	1.13		16.47	14.23	0.97		17.46	15.14	0.82
	57 (13.9)		13.43	13.43	1.50		13.78	13.78	1.29		14.66	14.66	1.13		15.51	15.51	0.99		16.47	16.47	0.84
STAGE 1																					
75 (23.9)	72 (22.2)	362	13.91	5.70	1.21	222	8.34	3.43	0.52	234	8.89	3.65	0.44	229	9.31	3.80	0.37	245	9.90	4.05	0.29
	67 (19.4)		12.50	7.42	1.22		7.48	4.49	0.53		7.97	4.78	0.46		8.34	4.91	0.40		8.86	5.24	0.33
	63 (17.2)		11.48	8.77	1.22		6.85	5.34	0.53		7.30	5.67	0.47		7.63	5.79	0.41		8.11	6.18	0.35
	57 (13.9)		10.41	10.41	1.22		6.25	6.25	0.54		6.65	6.65	0.48		6.87	6.87	0.43		7.32	7.32	0.37
80 (26.7)	72 (22.2)	362	13.87	7.46	1.21	222	8.31	4.53	0.52	234	8.86	4.82	0.44	229	9.28	4.96	0.37	245	9.87	5.29	0.29
	67 (19.4)		12.47	9.17	1.22		7.45	5.59	0.53		7.94	5.94	0.46		8.31	6.06	0.40		8.83	6.48	0.33
	63 (17.2)		11.48	10.51	1.22		6.85	6.43	0.53		7.30	6.83	0.47		7.62	6.93	0.41		8.10	7.41	0.35
	57 (13.9)		11.08	11.08	1.22		6.68	6.68	0.54		7.10	7.10	0.48		7.33	7.33	0.42		7.81	7.81	0.36

Operation in this area is restricted to maintain reliable system operation and customer comfort. The system will default to the next available stage
Stage 1 – Compressor speed limited to stage two at 105 outdoor.

See additional notes on page 26

DETAILED COOLING CAPACITIES# - COMFORT + DEHUMIDIFY MODE CONTINUED

EDB °F (°C)	EVAP. AIR	24VNA925 / FE4ANF005 Comfort + Dehumidify Mode Condenser Entering Air Temperature °F (°C)																			
		105 (40.5)				95 (35)				85 (29.4)				75 (23.9)				65 (18.3)			
	EWB °F (°C)	ID SCFM	Capacity MBtuh Total	Capacity MBtuh Sens‡	Total Sys. KW	ID SCFM	Capacity MBtuh Total	Capacity MBtuh Sens‡	Total Sys. KW	ID SCFM	Capacity MBtuh Total	Capacity MBtuh Sens‡	Total Sys. KW	ID SCFM	Capacity MBtuh Total	Capacity MBtuh Sens‡	Total Sys. KW	ID SCFM	Capacity MBtuh Total	Capacity MBtuh Sens‡	Total Sys. KW
STAGE 5																					
75 (23.9)	72 (22.2)	608	19.25	8.01	1.62	608	25.24	10.26	1.88	634	26.68	10.84	1.61	663	28.11	11.43	1.34	708	29.64	12.06	1.07
	67 (19.4)		17.48	10.88	1.63		22.98	13.18	1.89		24.31	13.92	1.63		25.64	14.68	1.38		27.06	15.57	1.13
	63 (17.2)		16.21	13.13	1.64		21.29	15.45	1.90		22.54	16.31	1.65		23.79	17.21	1.41		25.13	18.30	1.17
	57 (13.9)		15.18	15.18	1.65		19.10	18.78	1.90		20.23	19.83	1.66		21.37	20.92	1.44		22.62	22.29	1.21
80 (26.7)	72 (22.2)	608	19.12	10.84	1.61	608	25.12	13.12	1.88	634	26.55	13.85	1.60	663	27.98	14.60	1.33	708	29.49	15.47	1.07
	67 (19.4)		17.42	13.69	1.63		22.91	16.02	1.89		24.24	16.91	1.63		25.56	17.83	1.38		26.97	18.96	1.13
	63 (17.2)		16.26	15.91	1.64		21.26	18.28	1.90		22.51	19.29	1.65		23.76	20.35	1.41		25.10	21.68	1.17
	57 (13.9)		16.12	16.12	1.64		20.08	20.08	1.90		21.23	21.23	1.66		22.41	22.41	1.42		23.77	23.77	1.19
STAGE 3																					
75 (23.9)	72 (22.2)	437	15.62	6.37	1.16	437	16.33	6.64	1.03	452	17.27	7.02	0.91	475	18.26	7.42	0.78	510	19.32	7.87	0.62
	67 (19.4)		14.19	8.25	1.17		14.88	8.57	1.04		15.74	9.03	0.94		16.66	9.56	0.82		17.64	10.18	0.68
	63 (17.2)		13.12	9.74	1.18		13.79	10.07	1.05		14.60	10.61	0.96		15.46	11.23	0.85		16.38	12.00	0.71
	57 (13.9)		11.80	11.80	1.18		12.35	12.27	1.06		13.08	12.91	0.97		13.87	13.68	0.88		14.74	14.65	0.76
80 (26.7)	72 (22.2)	437	15.55	8.23	1.16	437	16.25	8.52	1.02	452	17.19	8.98	0.91	475	18.17	9.50	0.78	510	19.23	10.12	0.62
	67 (19.4)		14.14	10.11	1.17		14.83	10.44	1.04		15.69	10.99	0.94		16.60	11.63	0.82		17.57	12.43	0.67
	63 (17.2)		13.11	11.59	1.18		13.77	11.94	1.05		14.58	12.56	0.96		15.44	13.30	0.85		16.36	14.24	0.71
	57 (13.9)		12.51	12.51	1.18		13.05	13.05	1.05		13.78	13.78	0.97		14.60	14.60	0.86		15.55	15.55	0.74
STAGE 1 – FE4ANF005 ONLY																					
75 (23.9)	72 (22.2)	342	6.36	2.59	0.47	250	9.26	3.75	0.47	250	9.75	3.95	0.47	250	10.23	4.15	0.43	250	10.72	4.35	0.36
	67 (19.4)		10.72	6.18	0.76		8.39	4.68	0.48		8.84	4.89	0.49		9.27	5.09	0.47		9.70	5.30	0.40
	63 (17.2)		9.90	7.24	0.76		7.74	5.40	0.49		8.15	5.61	0.51		8.56	5.83	0.49		8.96	6.04	0.44
	57 (13.9)		8.82	8.81	0.77		6.85	6.46	0.49		7.22	6.68	0.52		7.59	6.90	0.52		7.95	7.12	0.48
80 (26.7)	72 (22.2)	342	11.79	6.17	0.75	250	9.23	4.68	0.47	250	9.72	4.88	0.47	250	10.20	5.09	0.43	250	10.68	5.30	0.36
	67 (19.4)		10.69	7.53	0.76		8.37	5.60	0.48		8.81	5.82	0.49		9.25	6.03	0.47		9.68	6.24	0.40
	63 (17.2)		9.88	8.60	0.76		7.72	6.32	0.49		8.14	6.54	0.51		8.54	6.76	0.49		8.95	6.98	0.44
	57 (13.9)		9.35	9.35	0.77		7.09	7.09	0.49		7.40	7.40	0.52		7.70	7.70	0.51		8.00	8.00	0.48
STAGE 1 – ALL OTHER INDOOR COMBINATIONS																					
75 (23.9)	72 (22.2)	342	3.18	1.29	0.24	222	8.99	3.64	0.47	234	9.59	3.89	0.48	229	9.99	4.06	0.44	245	10.66	4.33	0.36
	67 (19.4)		10.72	6.18	0.76		8.13	4.46	0.48		8.68	4.76	0.50		9.04	4.92	0.48		9.65	5.25	0.41
	63 (17.2)		9.90	7.24	0.76		7.49	5.09	0.49		8.00	5.44	0.51		8.34	5.58	0.50		8.91	5.98	0.44
	57 (13.9)		8.82	8.81	0.77		6.63	6.02	0.49		7.09	6.43	0.52		7.39	6.56	0.52		7.90	7.04	0.48
80 (26.7)	72 (22.2)	342	11.79	6.17	0.75	222	8.96	4.47	0.47	234	9.55	4.76	0.47	229	9.96	4.92	0.44	245	10.62	5.26	0.36
	67 (19.4)		10.69	7.53	0.76		8.11	5.28	0.48		8.66	5.63	0.50		9.02	5.78	0.48		9.63	6.18	0.41
	63 (17.2)		9.88	8.60	0.76		7.48	5.91	0.49		7.99	6.31	0.51		8.33	6.44	0.50		8.89	6.91	0.44
	57 (13.9)		9.35	9.35	0.77		6.73	6.73	0.49		7.19	7.19	0.52		7.40	7.40	0.52		7.93	7.93	0.48

Operation in this area is restricted to maintain reliable system operation and customer comfort. The system will default to the next available stage
Stage 1 – Compressor speed limited to stage two at 105 outdoor.

See additional notes on page 26

DETAILED COOLING CAPACITIES# - COMFORT + DEHUMIDIFY MODE CONTINUED

EDB °F (°C)	EVAP. AIR EWB °F (°C)	24VNA936 / FE4ANF005 Comfort + Dehumidify Mode Condenser Entering Air Temperature °F (°C) 105 (40.5) ID SCFM	Capacity MBtuh Total	Capacity MBtuh Sens‡	Total Sys. KW	95 (35) ID SCFM	Capacity MBtuh Total	Capacity MBtuh Sens‡	Total Sys. KW	85 (29.4) ID SCFM	Capacity MBtuh Total	Capacity MBtuh Sens‡	Total Sys. KW	75 (23.9) ID SCFM	Capacity MBtuh Total	Capacity MBtuh Sens‡	Total Sys. KW	65 (18.3) ID SCFM	Capacity MBtuh Total	Capacity MBtuh Sens‡	Total Sys. KW
STAGE 5																					
75 (23.9)	72 (22.2)	812	35.03	14.21	3.80	812	36.79	14.91	3.28	848	38.97	15.79	2.81	887	41.14	16.67	2.38	948	43.43	17.61	1.97
	67 (19.4)		32.03	18.10	3.76		33.69	18.87	3.26		35.70	19.98	2.81		37.69	21.10	2.39		39.83	22.39	2.00
	63 (17.2)		29.78	21.12	3.72		31.34	21.94	3.23		33.23	23.22	2.80		35.10	24.53	2.40		37.11	26.09	2.02
	57 (13.9)		26.68	25.51	3.66		28.08	26.39	3.19		29.78	27.92	2.78		31.49	29.50	2.40		33.35	31.47	2.04
80 (26.7)	72 (22.2)	812	34.90	17.98	3.79	812	36.65	18.72	3.28	848	38.82	19.81	2.81	887	40.98	20.92	2.37	948	43.26	22.19	1.97
	67 (19.4)		31.95	21.83	3.75		33.60	22.64	3.25		35.61	23.95	2.81		37.60	25.30	2.39		39.72	26.91	2.00
	63 (17.2)		29.73	24.84	3.72		31.29	25.70	3.23		33.16	27.18	2.80		35.04	28.72	2.39		37.04	30.61	2.02
	57 (13.9)		27.71	27.71	3.68		28.95	28.95	3.20		30.66	30.66	2.78		32.41	32.41	2.40		34.42	34.42	2.04
STAGE 3																					
75 (23.9)	72 (22.2)	566	21.74	8.83	1.80	566	22.72	9.22	1.63	600	24.20	9.82	1.47	626	25.61	10.39	1.30	664	27.10	11.00	1.09
	67 (19.4)		19.76	11.28	1.80		20.72	11.74	1.64		22.09	12.54	1.49		23.39	13.27	1.33		24.77	14.10	1.14
	63 (17.2)		18.28	13.20	1.80		19.22	13.70	1.63		20.51	14.65	1.50		21.73	15.51	1.35		23.02	16.51	1.18
	57 (13.9)		16.37	16.02	1.79		17.25	16.59	1.63		18.42	17.76	1.51		19.53	18.80	1.37		20.72	20.04	1.21
80 (26.7)	72 (22.2)	566	21.65	11.25	1.80	566	22.62	11.67	1.63	600	24.08	12.45	1.47	626	25.49	13.17	1.29	664	26.96	13.99	1.09
	67 (19.4)		19.70	13.69	1.80		20.66	14.18	1.63		22.03	15.15	1.49		23.32	16.03	1.33		24.69	17.07	1.14
	63 (17.2)		18.26	15.60	1.80		19.20	16.13	1.63		20.48	17.26	1.50		21.70	18.27	1.35		22.99	19.47	1.17
	57 (13.9)		17.18	17.18	1.80		17.96	17.96	1.63		19.20	19.20	1.50		20.34	20.34	1.36		21.61	21.61	1.20
STAGE 1 – FE4ANF005 ONLY																					
75 (23.9)	72 (22.2)	417	14.50	5.90	0.99	250	9.48	3.84	0.49	250	10.07	4.08	0.49	250	10.66	4.32	0.45	267	11.47	4.65	0.35
	67 (19.4)		13.17	7.58	1.00		8.59	4.79	0.50		9.13	5.04	0.52		9.66	5.30	0.49		10.39	5.71	0.41
	63 (17.2)		12.18	8.91	1.00		7.92	5.53	0.51		8.42	5.80	0.53		8.92	6.07	0.51		9.60	6.55	0.45
	57 (13.9)		10.89	10.84	1.01		7.02	6.61	0.52		7.46	6.90	0.55		7.91	7.19	0.54		8.52	7.77	0.49
80 (26.7)	72 (22.2)	417	14.44	7.57	0.99	250	9.44	4.79	0.49	250	10.03	5.04	0.49	250	10.62	5.30	0.45	267	11.43	5.71	0.35
	67 (19.4)		13.13	9.25	1.00		8.56	5.73	0.50		9.10	6.01	0.52		9.64	6.28	0.49		10.36	6.78	0.41
	63 (17.2)		12.16	10.56	1.00		7.91	6.47	0.51		8.41	6.76	0.53		8.91	7.05	0.51		9.58	7.61	0.45
	57 (13.9)		11.52	11.52	1.01		7.26	7.26	0.52		7.64	7.64	0.54		8.03	8.03	0.54		8.66	8.66	0.48
STAGE 1 – ALL OTHER INDOOR COMBINATIONS																					
75 (23.9)	72 (22.2)	417	14.50	5.90	0.99	236	9.35	3.79	0.49	232	9.88	4.01	0.50	246	10.62	4.30	0.45	267	11.47	4.65	0.35
	67 (19.4)		13.17	7.58	1.00		8.46	4.68	0.50		8.94	4.90	0.52		9.62	5.27	0.49		10.39	5.71	0.41
	63 (17.2)		12.18	8.91	1.00		7.80	5.37	0.51		8.25	5.59	0.53		8.88	6.02	0.51		9.60	6.55	0.45
	57 (13.9)		10.89	10.84	1.01		6.91	6.39	0.52		7.30	6.60	0.55		7.87	7.12	0.54		8.52	7.77	0.49
80 (26.7)	72 (22.2)	417	14.44	7.57	0.99	236	9.31	4.68	0.49	232	9.84	4.90	0.50	246	10.58	5.27	0.45	267	11.43	5.71	0.35
	67 (19.4)		13.13	9.25	1.00		8.44	5.57	0.50		8.92	5.79	0.52		9.60	6.23	0.49		10.36	6.78	0.41
	63 (17.2)		12.16	10.56	1.00		7.79	6.26	0.51		8.23	6.48	0.53		8.87	6.98	0.51		9.58	7.61	0.45
	57 (13.9)		11.52	11.52	1.01		7.08	7.08	0.52		7.39	7.39	0.55		7.97	7.97	0.54		8.66	8.66	0.48

Operation in this area is restricted to maintain reliable system operation and customer comfort. The system will default to the next available stage
Stage 1 – Compressor speed limited to stage two at 105 outdoor.

See additional notes on page 26

DETAILED COOLING CAPACITIES# - COMFORT + DEHUMIDIFY MODE CONTINUED

EDB °F (°C)	EVAP. AIR	24VNA937 / FE4ANB006L Comfort + Dehumidify Mode Condenser Entering Air Temperature °F (°C)																		
		105 (40.5)				95 (35)				85 (29.4)				75 (23.9)				65 (18.3)		
	EWB °F (°C)	ID SCFM	Capacity MBtuh Total	Capacity MBtuh Sens‡	Total Sys. KW	ID SCFM	Capacity MBtuh Total	Capacity MBtuh Sens‡	Total Sys. KW	ID SCFM	Capacity MBtuh Total	Capacity MBtuh Sens‡	Total Sys. KW	ID SCFM	Capacity MBtuh Total	Capacity MBtuh Sens‡	Total Sys. KW	ID SCFM	Capacity MBtuh Total	Capacity MBtuh Sens‡	Total Sys. KW
STAGE 5																					
75 (23.9)	72 (22.2)	812	33.61	13.66	2.96	812	35.51	14.41	2.51	848	37.87	15.36	2.15	888	40.27	16.34	1.81	948	42.86	17.40	1.51
	67 (19.4)		30.54	17.52	2.94		32.28	18.33	2.50		34.42	19.52	2.15		36.60	20.75	1.83		38.94	22.16	1.53
	63 (17.2)		28.29	20.54	2.93		29.92	21.40	2.49		31.90	22.77	2.15		33.91	24.19	1.84		36.07	25.89	1.55
	57 (13.9)		25.29	24.94	2.90		26.74	25.90	2.47		28.50	27.52	2.15		30.29	29.23	1.85		32.24	31.32	1.58
80 (26.7)	72 (22.2)	812	33.51	17.49	2.96	812	35.42	18.30	2.51	848	37.77	19.49	2.15	888	40.17	20.72	1.81	948	42.74	22.14	1.51
	67 (19.4)		30.47	21.31	2.94		32.21	22.18	2.50		34.35	23.59	2.15		36.52	25.07	1.83		38.86	26.84	1.53
	63 (17.2)		28.24	24.31	2.93		29.87	25.23	2.49		31.85	26.83	2.15		33.86	28.50	1.84		36.02	30.55	1.55
	57 (13.9)		26.63	26.63	2.91		27.94	27.94	2.48		29.75	29.75	2.15		31.61	31.61	1.84		33.74	33.74	1.57
STAGE 3																					
75 (23.9)	72 (22.2)	566	22.84	9.26	2.06	566	24.29	9.84	1.72	600	26.09	10.57	1.47	625	27.82	11.27	1.23	665	29.72	12.04	1.01
	67 (19.4)		20.67	11.68	2.07		21.98	12.30	1.74		23.60	13.23	1.50		25.16	14.10	1.28		26.87	15.10	1.07
	63 (17.2)		19.09	13.58	2.08		20.29	14.24	1.75		21.79	15.33	1.52		23.23	16.32	1.31		24.80	17.51	1.11
	57 (13.9)		17.03	16.40	2.08		18.10	17.12	1.77		19.44	18.43	1.55		20.71	19.61	1.34		22.12	21.08	1.15
80 (26.7)	72 (22.2)	566	22.78	11.70	2.06	566	24.23	12.32	1.72	600	26.03	13.26	1.47	625	27.76	14.13	1.23	665	29.64	15.14	1.01
	67 (19.4)		20.62	14.10	2.07		21.93	14.77	1.74		23.55	15.90	1.50		25.10	16.93	1.28		26.81	18.18	1.07
	63 (17.2)		19.06	15.99	2.08		20.27	16.70	1.75		21.76	17.98	1.52		23.20	19.14	1.31		24.77	20.57	1.11
	57 (13.9)		17.76	17.76	2.08		18.73	18.73	1.76		20.14	20.14	1.54		21.44	21.44	1.33		22.97	22.97	1.14
STAGE 1 – FE4ANB006L ONLY																					
75 (23.9)	72 (22.2)	500	18.14	7.36	1.70	500	14.63	6.00	0.87	500	15.69	6.41	0.72	500	16.75	6.83	0.57	500	17.81	7.24	0.44
	67 (19.4)		16.41	9.34	1.72		13.27	7.90	0.91		14.22	8.36	0.76		15.17	8.83	0.63		16.11	9.29	0.50
	63 (17.2)		15.16	10.91	1.74		12.27	9.39	0.93		13.14	9.90	0.80		14.01	10.41	0.66		14.88	10.91	0.54
	57 (13.9)		13.54	13.23	1.75		11.20	11.20	0.96		11.91	11.91	0.83		12.61	12.61	0.71		13.31	13.30	0.59
80 (26.7)	72 (22.2)	500	18.09	9.36	1.70	500	14.58	7.89	0.87	500	15.64	8.36	0.72	500	16.70	8.83	0.57	500	17.75	9.31	0.44
	67 (19.4)		16.37	11.32	1.72		13.23	9.78	0.91		14.18	10.30	0.76		15.12	10.82	0.63		16.07	11.34	0.50
	63 (17.2)		15.14	12.88	1.74		12.26	11.27	0.93		13.13	11.83	0.80		14.00	12.39	0.66		14.87	12.96	0.54
	57 (13.9)		14.21	14.21	1.74		11.88	11.88	0.94		12.62	12.62	0.81		13.36	13.36	0.68		14.09	14.09	0.57
STAGE 1 – ALL OTHER INDOOR COMBINATIONS																					
75 (23.9)	72 (22.2)	417	17.38	7.04	1.70	236	12.07	4.96	0.92	232	12.74	5.27	0.79	246	13.77	5.69	0.66	267	14.98	6.17	0.52
	67 (19.4)		15.72	8.68	1.72		10.91	5.83	0.95		11.51	6.14	0.83		12.45	6.65	0.70		13.53	7.24	0.57
	63 (17.2)		14.53	9.98	1.73		10.07	6.52	0.97		10.63	6.83	0.85		11.49	7.40	0.73		12.49	8.08	0.61
	57 (13.9)		12.94	11.91	1.74		8.96	7.52	0.98		9.45	7.84	0.87		10.21	8.50	0.76		11.10	9.31	0.65
80 (26.7)	72 (22.2)	417	17.34	8.70	1.70	236	12.04	5.86	0.92	232	12.71	6.17	0.79	246	13.75	6.68	0.66	267	14.95	7.27	0.52
	67 (19.4)		15.69	10.34	1.72		10.89	6.72	0.95		11.49	7.05	0.83		12.43	7.63	0.70		13.51	8.33	0.57
	63 (17.2)		14.50	11.63	1.73		10.05	7.40	0.97		10.61	7.73	0.85		11.47	8.38	0.73		12.47	9.17	0.61
	57 (13.9)		13.22	13.22	1.74		8.95	8.40	0.98		9.44	8.73	0.87		10.21	9.47	0.76		11.09	10.40	0.65

Operation in this area is restricted to maintain reliable system operation and customer comfort. The system will default to the next available stage
Stage 1 – Compressor speed limited to stage two at 105 outdoor.

See additional notes on page 26

DETAILED COOLING CAPACITIES# - COMFORT + DEHUMIDIFY MODE CONTINUED

EDB °F (°C)	EVAP. AIR	24VNA948 / FE4BNB006 Comfort + Dehumidify Mode Condenser Entering Air Temperature °F (°C)																		
		105 (40.5)				95 (35)				85 (29.4)				75 (23.9)				65 (18.3)		
	EWB °F (°C)	ID SCFM	Capacity MBtuh Total	Capacity MBtuh Sens‡	Total Sys. KW	ID SCFM	Capacity MBtuh Total	Capacity MBtuh Sens‡	Total Sys. KW	ID SCFM	Capacity MBtuh Total	Capacity MBtuh Sens‡	Total Sys. KW	ID SCFM	Capacity MBtuh Total	Capacity MBtuh Sens‡	Total Sys. KW	ID SCFM	Capacity MBtuh Total	Capacity MBtuh Sens‡	Total Sys. KW
STAGE 5																					
75 (23.9)	72 (22.2)	1110	46.42	18.85	4.71	1184	49.80	20.23	4.17	1247	53.09	21.57	3.65	1330	56.46	22.96	3.19	1226	58.44	23.68	2.67
	67 (19.4)		42.40	24.08	4.63		45.50	25.89	4.11		48.51	27.62	3.61		51.61	29.50	3.17		53.38	29.85	2.67
	63 (17.2)		39.38	28.15	4.57		42.27	30.30	4.06		45.08	32.33	3.58		47.99	34.60	3.15		49.62	34.64	2.66
	57 (13.9)		35.31	34.09	4.47		37.94	36.72	3.98		40.49	39.19	3.53		43.14	41.99	3.12		44.52	41.65	2.64
80 (26.7)	72 (22.2)	1110	46.26	23.95	4.71	1184	49.62	25.75	4.16	1247	52.90	27.46	3.65	1330	56.25	29.32	3.19	1226	58.25	29.68	2.67
	67 (19.4)		42.29	29.13	4.63		45.38	31.35	4.10		48.38	33.45	3.61		51.47	35.79	3.17		53.26	35.77	2.67
	63 (17.2)		39.31	33.18	4.57		42.20	35.74	4.06		45.01	38.14	3.58		47.91	40.87	3.15		49.54	40.54	2.66
	57 (13.9)		36.80	36.80	4.51		39.58	39.58	4.01		42.24	42.24	3.55		45.10	45.10	3.13		45.76	45.76	2.65
STAGE 3																					
75 (23.9)	72 (22.2)	744	29.62	12.03	2.44	801	31.87	12.96	2.16	842	34.08	13.86	1.91	887	36.31	14.77	1.66	1001	38.96	15.92	1.43
	67 (19.4)		26.97	15.41	2.44		29.06	16.68	2.16		31.09	17.85	1.92		33.14	19.06	1.68		35.59	20.85	1.46
	63 (17.2)		24.98	18.04	2.43		26.95	19.58	2.15		28.84	20.96	1.92		30.75	22.40	1.70		33.06	24.69	1.49
	57 (13.9)		22.33	21.88	2.41		24.13	23.80	2.14		25.84	25.48	1.92		27.58	27.24	1.71		29.92	29.92	1.51
80 (26.7)	72 (22.2)	744	29.51	15.35	2.44	801	31.74	16.60	2.15	842	33.93	17.76	1.91	887	36.15	18.96	1.66	1001	38.77	20.72	1.43
	67 (19.4)		26.90	18.70	2.44		28.98	20.29	2.15		31.00	21.72	1.92		33.04	23.21	1.68		35.47	25.60	1.46
	63 (17.2)		34.45	25.97	4.20		26.90	23.17	2.15		28.79	24.81	1.92		30.70	26.53	1.70		33.02	29.42	1.49
	57 (13.9)		30.79	29.76	4.10		33.37	32.41	3.78		35.77	34.73	3.46		38.24	37.17	3.15		41.59	41.26	2.86
STAGE 1 – FE4ANB006 ONLY																					
75 (23.9)	72 (22.2)	662	25.60	10.40	1.99	500	18.27	7.44	0.93	500	19.44	7.91	0.83	508	20.67	8.39	0.71	534	22.04	8.96	0.56
	67 (19.4)		23.27	13.31	1.99		16.64	9.65	0.95		17.72	10.17	0.86		18.84	10.76	0.75		20.11	11.51	0.61
	63 (17.2)		21.53	15.58	1.99		15.45	11.39	0.97		16.45	11.96	0.88		17.49	12.62	0.77		18.68	13.53	0.65
	57 (13.9)		19.26	18.92	1.98		13.90	13.90	0.98		14.76	14.58	0.90		15.69	15.35	0.81		16.77	16.48	0.70
80 (26.7)	72 (22.2)	662	25.60	10.40	1.99	500	18.26	7.44	0.93	500	19.44	7.91	0.83	508	20.67	8.39	0.71	534	22.04	8.96	0.56
	67 (19.4)		23.27	13.31	1.99		16.64	9.65	0.95		17.72	10.17	0.86		18.84	10.76	0.75		20.11	11.51	0.61
	63 (17.2)		21.53	15.58	1.99		15.45	11.39	0.97		16.45	11.96	0.88		17.49	12.62	0.77		18.68	13.53	0.65
	57 (13.9)		19.26	18.92	1.98		13.90	13.90	0.98		14.76	14.58	0.90		15.69	15.35	0.81		16.77	16.48	0.70
STAGE 1 – ALL OTHER COILS																					
75 (23.9)	72 (22.2)	662	25.60	10.40	1.99	457	17.95	7.29	0.93	482	19.30	7.84	0.83	508	20.67	8.39	0.71	534	22.04	8.96	0.56
	67 (19.4)		23.27	13.31	1.99		16.36	9.31	0.95		17.59	10.02	0.86		18.84	10.76	0.75		20.11	11.51	0.61
	63 (17.2)		21.53	15.58	1.99		15.18	10.89	0.97		16.33	11.74	0.88		17.49	12.62	0.77		18.68	13.53	0.65
	57 (13.9)		19.26	18.92	1.98		13.59	13.23	0.98		14.63	14.27	0.90		15.69	15.35	0.81		16.77	16.48	0.70
80 (26.7)	72 (22.2)	662	25.60	10.40	1.99	457	17.95	7.29	0.93	482	19.30	7.84	0.83	508	20.67	8.39	0.71	534	22.04	8.96	0.56
	67 (19.4)		23.27	13.31	1.99		16.36	9.31	0.95		17.59	10.02	0.86		18.84	10.76	0.75		20.11	11.51	0.61
	63 (17.2)		21.53	15.58	1.99		15.18	10.89	0.97		16.33	11.74	0.88		17.49	12.62	0.77		18.68	13.53	0.65
	57 (13.9)		19.26	18.92	1.98		13.59	13.23	0.98		14.63	14.27	0.90		15.69	15.35	0.81		16.77	16.48	0.70

Operation in this area is restricted to maintain reliable system operation and customer comfort. The system will default to the next available stage
Stage 5 – Compressor speed limited to stage four at 65 outdoor. **Stage 1 –** Compressor speed limited to stage two at 105 outdoor.

See additional notes on page 26

DETAILED COOLING CAPACITIES# - COMFORT + DEHUMIDIFY MODE CONTINUED

EDB °F (°C)	EVAP. AIR	24VNA949 / *CNPV*6024AL*+58CV(A, X)155–22 Comfort + Dehumidify Mode Condenser Entering Air Temperature °F (°C)																			
		105 (40.5)				95 (35)				85 (29.4)				75 (23.9)				65 (18.3)			
	EWB °F (°C)	ID SCFM	Capacity MBtuh Total	Capacity MBtuh Sens‡	Total Sys. KW	ID SCFM	Capacity MBtuh Total	Capacity MBtuh Sens‡	Total Sys. KW	ID SCFM	Capacity MBtuh Total	Capacity MBtuh Sens‡	Total Sys. KW	ID SCFM	Capacity MBtuh Total	Capacity MBtuh Sens‡	Total Sys. KW	ID SCFM	Capacity MBtuh Total	Capacity MBtuh Sens‡	Total Sys. KW
STAGE 5																					
75 (23.9)	72 (22.2)	1110	46.69	19.03	4.05	1184	49.03	19.99	3.61	1196	50.82	20.67	3.20	1200	52.44	21.29	2.83	1236	54.18	21.99	2.52
	67 (19.4)		42.37	24.54	3.98		44.50	25.79	3.55		46.13	26.47	3.14		47.59	27.05	2.77		49.16	27.84	2.47
	63 (17.2)		39.20	28.86	3.94		41.17	30.33	3.51		42.67	31.00	3.10		44.02	31.54	2.74		45.47	32.41	2.44
	57 (13.9)		35.30	35.19	3.89		37.12	36.99	3.46		38.37	37.72	3.05		39.47	38.20	2.69		40.73	39.17	2.39
80 (26.7)	72 (22.2)	1110	46.59	24.56	4.05	1184	48.93	25.81	3.61	1196	50.72	26.49	3.20	1200	52.34	27.07	2.83	1236	54.08	27.87	2.52
	67 (19.4)		42.29	30.00	3.98		44.41	31.53	3.55		46.04	32.21	3.14		47.51	32.74	2.77		49.07	33.63	2.47
	63 (17.2)		39.24	34.32	3.94		41.22	36.08	3.51		42.71	36.75	3.10		44.03	37.24	2.74		45.49	38.20	2.44
	57 (13.9)		37.41	37.41	3.92		39.33	39.33	3.49		40.47	40.47	3.07		41.42	41.42	2.71		42.65	42.65	2.41
STAGE 3																					
75 (23.9)	72 (22.2)	744	30.83	12.50	2.33	801	32.85	13.32	2.05	842	34.76	14.09	1.82	887	36.68	14.86	1.61	1001	39.12	15.87	1.43
	67 (19.4)		27.67	15.62	2.33		29.56	16.69	2.04		31.29	17.62	1.81		33.04	18.56	1.60		35.28	20.03	1.43
	63 (17.2)		25.33	18.03	2.32		27.09	19.29	2.03		28.71	20.34	1.81		30.31	21.41	1.61		32.39	23.23	1.44
	57 (13.9)		22.37	21.65	2.32		23.97	23.17	2.03		25.40	24.38	1.81		26.83	25.65	1.61		28.78	28.01	1.44
80 (26.7)	72 (22.2)	744	30.77	15.75	2.33	801	32.78	16.79	2.05	842	34.69	17.72	1.82	887	36.60	18.67	1.61	1001	39.04	20.14	1.43
	67 (19.4)		27.61	18.83	2.33		29.50	20.12	2.04		31.23	21.20	1.81		32.98	22.32	1.60		35.21	24.23	1.43
	63 (17.2)		25.33	21.25	2.32		27.10	22.73	2.03		28.71	23.93	1.81		30.32	25.17	1.61		32.41	27.44	1.43
	57 (13.9)		23.54	23.54	2.32		25.21	25.21	2.03		26.63	26.63	1.81		28.08	28.08	1.61		30.35	30.35	1.44
STAGE 1																					
75 (23.9)	72 (22.2)	662	23.83	9.66	1.63	457	17.67	7.17	1.02	482	19.19	7.80	0.93	508	20.76	8.45	0.80	535	22.37	9.11	0.61
	67 (19.4)		21.23	12.07	1.64		15.73	8.59	1.01		17.11	9.31	0.93		18.52	10.05	0.81		19.97	10.81	0.63
	63 (17.2)		19.35	13.95	1.64		14.34	9.71	1.00		15.61	10.49	0.93		16.90	11.30	0.82		18.23	12.13	0.66
	57 (13.9)		17.03	16.78	1.63		12.49	11.34	0.99		13.61	12.23	0.94		14.76	13.14	0.84		15.94	14.09	0.69
80 (26.7)	72 (22.2)	662	23.77	12.23	1.63	457	17.63	8.73	1.02	482	19.16	9.45	0.93	508	20.73	10.20	0.80	535	22.33	10.97	0.61
	67 (19.4)		21.18	14.61	1.64		15.71	10.14	1.01		17.08	10.95	0.93		18.49	11.79	0.81		19.94	12.65	0.63
	63 (17.2)		19.36	16.50	1.64		14.33	11.25	1.00		15.59	12.13	0.93		16.89	13.04	0.82		18.22	13.97	0.66
	57 (13.9)		18.08	18.08	1.63		12.74	12.74	0.99		13.79	13.79	0.94		14.88	14.88	0.83		16.03	15.95	0.69

Operation in this area is restricted to maintain reliable system operation and customer comfort. The system will default to the next available stage
Stage 1 – Compressor speed limited to stage two at 105 outdoor.

See additional notes on page 26

DETAILED COOLING CAPACITIES# - COMFORT + DEHUMIDIFY MODE CONTINUED

EDB °F (°C)	EVAP. AIR	24VNA960 / FE4BNB006L Comfort + Dehumidify Mode Condenser Entering Air Temperature °F (°C)																			
		105 (40.5)				95 (35)				85 (29.4)				75 (23.9)				65 (18.3)			
	EWB °F (°C)	ID SCFM	Capacity MBtuh Total	Capacity MBtuh Sens‡	Total Sys. KW	ID SCFM	Capacity MBtuh Total	Capacity MBtuh Sens‡	Total Sys. KW	ID SCFM	Capacity MBtuh Total	Capacity MBtuh Sens‡	Total Sys. KW	ID SCFM	Capacity MBtuh Total	Capacity MBtuh Sens‡	Total Sys. KW	ID SCFM	Capacity MBtuh Total	Capacity MBtuh Sens‡	Total Sys. KW
STAGE 5																					
75 (23.9)	72 (22.2)	**1367**	57.74	23.45	6.51	**1440**	61.60	25.02	5.73	**1514**	65.43	26.57	5.06	**1566**	69.11	28.06	4.43	**1488**	71.73	29.06	3.80
	67 (19.4)		52.75	29.96	6.32		56.26	31.94	5.56		59.74	33.92	4.89		63.08	35.74	4.28		65.39	36.48	3.66
	63 (17.2)		49.06	35.05	6.19		52.31	37.35	5.43		55.53	39.67	4.77		58.62	41.74	4.17		60.75	42.26	3.56
	57 (13.9)		44.14	42.48	6.02		47.05	45.25	5.27		49.93	48.04	4.62		52.69	50.49	4.02		54.52	50.74	3.43
80 (26.7)	72 (22.2)	**1367**	57.61	29.82	6.52	**1440**	61.47	31.80	5.74	**1514**	65.28	33.78	5.06	**1566**	68.97	35.61	4.43	**1488**	71.59	36.37	3.80
	67 (19.4)		52.65	36.25	6.32		56.15	38.64	5.56		59.62	41.04	4.89		62.96	43.19	4.28		65.29	43.67	3.66
	63 (17.2)		48.99	41.31	6.19		52.23	44.02	5.43		55.45	46.75	4.77		58.54	49.15	4.17		60.67	49.42	3.56
	57 (13.9)		45.90	45.90	6.08		48.92	48.92	5.33		51.93	51.93	4.67		54.72	54.72	4.07		55.91	55.91	3.46
STAGE 3																					
75 (23.9)	72 (22.2)	**959**	36.98	15.01	3.25	**1013**	39.25	15.94	2.79	**1066**	41.77	16.95	2.44	**1120**	44.28	17.97	2.13	**1210**	47.05	19.11	1.87
	67 (19.4)		33.40	19.03	3.22		35.55	20.23	2.75		37.83	21.50	2.39		40.10	22.76	2.09		42.62	24.30	1.84
	63 (17.2)		30.77	22.16	3.21		32.82	23.59	2.72		34.94	25.04	2.37		37.04	26.50	2.06		39.38	28.36	1.81
	57 (13.9)		27.31	26.75	3.18		29.19	28.48	2.69		31.09	30.22	2.34		32.99	31.96	2.04		35.10	34.26	1.79
80 (26.7)	72 (22.2)	**959**	36.89	19.10	3.25	**1013**	39.15	20.27	2.79	**1066**	41.66	21.53	2.44	**1120**	44.17	22.80	2.13	**1210**	46.93	24.34	1.87
	67 (19.4)		33.32	23.06	3.22		35.47	24.51	2.75		37.74	26.01	2.39		40.02	27.53	2.09		42.53	29.47	1.84
	63 (17.2)		30.72	26.18	3.21		32.77	27.85	2.72		34.89	29.54	2.37		36.99	31.25	2.06		39.33	33.50	1.81
	57 (13.9)		28.74	28.74	3.19		30.65	30.65	2.70		32.58	32.58	2.35		34.53	34.53	2.05		36.85	36.85	1.80
STAGE 1																					
75 (23.9)	72 (22.2)	**748**	27.11	11.00	2.21	**600**	19.91	8.07	1.22	**600**	20.99	8.50	1.01	**647**	22.49	9.11	0.80	**700**	24.02	9.73	0.59
	67 (19.4)		24.28	13.80	2.21		17.69	10.04	1.21		18.67	10.45	1.01		20.04	11.19	0.81		21.43	11.97	0.61
	63 (17.2)		22.21	15.99	2.20		16.05	11.57	1.21		16.97	11.96	1.01		18.23	12.81	0.82		19.53	13.71	0.62
	57 (13.9)		19.51	19.20	2.20		13.98	13.85	1.20		14.76	14.19	1.02		15.88	15.20	0.84		17.03	16.27	0.65
80 (26.7)	72 (22.2)	**748**	27.04	13.93	2.21	**600**	19.86	10.20	1.22	**600**	20.94	10.61	1.01	**647**	22.43	11.35	0.80	**700**	23.96	12.13	0.59
	67 (19.4)		24.22	16.71	2.21		17.65	12.16	1.21		18.63	12.54	1.01		19.99	13.42	0.81		21.39	14.35	0.61
	63 (17.2)		22.18	18.88	2.20		16.04	13.68	1.21		16.95	14.04	1.01		18.21	15.03	0.82		19.50	16.08	0.62
	57 (13.9)		20.65	20.65	2.20		14.90	14.90	1.20		15.50	15.50	1.02		16.63	16.63	0.83		17.82	17.82	0.64

Operation in this area is restricted to maintain reliable system operation and customer comfort. The system will default to the next available stage
Stage 5 – Compressor speed limited to stage four at 65 outdoor. **Stage 1 –** Compressor speed limited to stage two at 105 outdoor.

NOTES:

* Tested combination.

† Total and sensible capacities are net capacities. Blower motor heat has been subtracted.

‡ Sensible capacities are shown for both 80°F (27°C) and 75°F (23.4°C) entering air at the indoor coil.
For sensible capacities at other than these, deduct 835 Btuh (245 kW) per 1000 CFM (480 L/S) of indoor coil air for each degree below reference temperature, or add 835 Btuh (245 kW) per 1000 CFM (480 L/S) of indoor coil air for each degree above reference temperature.

\# Detailed cooling capacities are based on indoor and outdoor unit at the same elevation per AHRI standard 210/240–2008. If additional tubing length and/or indoor unit is located above outdoor unit, a slight variation in capacity may occur.

** System kw is total of indoor and outdoor unit kilowatts.

NOTE: When the required data falls between the published data, interpolation may be performed. Extrapolation is not an acceptable practice.

EWB — Entering Wet Bulb

GUIDE SPECIFICATIONS
GENERAL

System Description

Outdoor-mounted, air-cooled, split-system air conditioning unit suitable for ground or rooftop installation. Unit consists of a hermetic compressor, an air-cooled coil, forward-swept blade propeller-type condenser fan, and a control box. Unit will discharge supply air upward as shown on contract drawings. Unit will be used in a refrigeration circuit to match up to a packaged fan coil or coil unit.

Quality Assurance

— Unit will be rated in accordance with the latest edition of AHRI Standard 240.

— Unit will be certified for capacity and efficiency, and listed in the latest AHRI directory.

— Unit construction will comply with latest edition of ASHRAE and with NEC.

— Unit will be constructed in accordance with UL standards and will carry the UL label of approval. Unit will have C-UL approval.

— Unit cabinet will be capable of withstanding Federal Test Method Standard No. 141 (Method 6061) 500-hr salt spray test.

— Air-cooled condenser coils are pressure tested and the outdoor units are leak tested.

— Unit constructed in ISO9001 approved facility.

Delivery, Storage, and Handling

— Unit will be shipped as single package only and is stored and handled per unit manufacturer's recommendations.

Warranty (for inclusion by specifying engineer)

— U.S. and Canada only.

PRODUCTS

Equipment

— Factory-assembled, single-piece, air-cooled air conditioning unit. Contained within the unit enclosure is all factory wiring, piping, controls, compressor, refrigerant charge Puron® (R-410A) refrigerant, and special features required prior to field start-up.

Unit Cabinet

— Unit cabinet will be constructed of galvanized steel, bonderized, and coated with a powder coat paint.

Fans

— Condenser fan will be direct-drive propeller type, forward swept blade, discharging air upward.

— Condenser fan motors will be totally enclosed, 1-phase type with class B insulation and permanently lubricated.

— Shafts will be corrosion resistant.

— Fan blades will be statically and dynamically balanced.

— Condenser fan openings will be equipped with coated steel wire safety guards.

Compressor

— Compressor will be hermetically sealed.

— Compressor will be mounted on rubber vibration isolators.

— Compressor will be covered with a sound absorbing blanket.

Condenser Coil

— Condenser coil will be air cooled.

— Coil will be constructed of aluminum fins mechanically bonded to copper tubes which are then cleaned, dehydrated, and sealed.

Refrigeration Components

— Refrigeration circuit components will include liquid-line front-seating shutoff valve with sweat connections, vapor-line front-seating shutoff valve with sweat connections, system charge of Puron® (R-410A) refrigerant, POE compressor oil, accumulator, charge compensator, electronic expansion valve, and reversing valve.

— Unit will be equipped with high-pressure switch, suction pressure transducer, and filter drier for Puron® refrigerant.

Operating Characteristics

— The capacity of the unit will meet or exceed _____ Btuh at a suction temperature of _____ °F (°C). The power consumption at full load will not exceed _____ kW.

— Combination of the unit and the evaporator or fan coil unit will have a total net cooling capacity of _____ Btuh or greater at conditions of _____ CFM entering air temperature at the evaporator at _____ °F (°C) wet bulb and _____ °F (°C) dry bulb, and air entering the unit at _____ °F (°C).

— The system will have a SEER of _____ Btuh/watt or greater at DOE conditions.

Electrical Requirements

— Nominal unit electrical characteristics will be _____ v, single phase, 60 hz. The unit will be capable of satisfactory operation within voltage limits of _____ v to _____ v.

— Unit electrical power will be single point connection.

— Control circuit will be 24v.

— Compliant with IEC 61000-4-5 Transient Surge Requirement.

Special Features

— Refer to section of this literature identifying accessories and descriptions for specific features and available enhancements.

— Infinity control with appropriate software version is required for full featured operation.

SYSTEM DESIGN SUMMARY

1. Intended for outdoor installation with free air inlet and outlet. Outdoor fan external static pressure available is less than 0.01-in. wc.
2. This product is not qualified for low ambient cooling operation.
   Minimum cooling outdoor operating temperatures:
   - Communicating systems: 40°F (4.44°C)
   - Non-communicating systems: 55°F (12.8°C)
3. For reliable operation, unit should be level in all horizontal planes.
4. This unit is qualified for up to 100 ft (30.5 m) equivalent length of line set without additional accessories.
5. If any refrigerant tubing is buried, provide a 6 in. (152.4 mm) vertical rise to the valve connections at the unit. Refrigerant tubing lengths up to 36 in. (914.4 mm) may be buried without further consideration. Do not bury refrigerant lines longer than 36 in. (914.4 mm).
6. Use only copper wire for electric connection at unit. Aluminum and clad aluminum are not acceptable for the type of connector provided.
7. Do not apply capillary tube indoor coils to these units.
8. Puron refrigerant TXV required on indoor coil.

Copyright 2019 Carrier Corp. • 7310 W. Morris St. • Indianapolis, IN 46231
Edition Date: 03/19

Catalog No: 24VNA9–08PD

Manufacturer reserves the right to change, at any time, specifications and designs without notice and without obligations.

Replaces: 24VNA9–07PD