Outdoor Unit Multizone Heat Pump Ductless System

Outdoor Model: 37MGHAQ18CA3

Job Data: | **Location:** | **Carrier #:** 37MGHAQ18CA3

Tag #: | **Date:**

STANDARD FEATURES

- Multiple styles of indoor units
  - High Wall
  - 4-way Cassette
  - 1-way Cassette
  - Slim Ducted
  - Floor Console
  - Ceiling & Floor
  - Air Handler
- 100% Heating Capacity at 5° F (-15° C)
- Variable Speed (Inverter) Compressor
- Basepan Heater factory installed
- Quiet operation
- Aluminum Hydrophilic pre-coated fins

RESIDENTIAL APPLICATION LIMITED WARRANTY*

- Ten (10) years if properly registered within ninety (90) days after original installation, parts are warranted to the original purchaser for a period of ten (10) years. Otherwise, parts warranty is five (5) years.

NOTE: Images for illustration purposes only. Actual models may be slightly different.

Outdoor - Heat Pump

Outdoor Model #			37MGHAQ18CA3
System	Outdoor Size		18000
Electrical	Voltage, Phase, Cycle	V/Ph/Hz	208-230/1/60
	MCA	A.	17.5
	MOPA	A.	20
	SCCR	kA	5
Operating Range	Cooling Outdoor DB Min - Max	°F(°C)	-22~122(-30～50)
	Heating Outdoor DB Min - Max	°F(°C)	-22~75(-30～24)
Piping	Total Piping Length	ft (m)	196.9(60)
	Std Piping Length		24.6 (7.5)
	Piping Lift*	ft (m)	49.21(15)
	Pipe Connection Size - Liquid	in (mm)	3x1/4in(3x6.35mm)
	Pipe Connection Size - Suction	in (mm)	3x3/8in(3x9.52mm)
Refrigerant	Refrigerant Type		R454B
	Charge	lbs (kg)	4.89(2.22)
	Add'l Refrigerant (between Std & Max Piping Lengths)	Oz/ft (g/m)	0.16(15)
Outdoor Coil	Face Area	Sq. Ft.	8.18
	No. Rows		9+
	Fins per inch		19
	Circuits		6
Compressor	Type		ROTARY
	Model		KTM240D46UKT2
	Oil Type		ESTER OIL
	Oil Charge	Fl. Oz.	20.97
	Rated Current	RLA	4.15/9.30
Airflow & Sound	Airflow	CFM	2130.665097
	Sound Pressure	dB(A)	61.5
Dimensions	Height	in (mm)	31.89(810)
	Width	in (mm)	37.24(946)
	Depth	in (mm)	16.14(410)
	Net Weight	lbs (kg)	137.35(62.3)
	Shipping Height	in (mm)	34.84(885)
	Shipping Width	in (mm)	42.91(1090)
	Shipping Depth	in (mm)	19.68(500)
	Shipping Net Weight	lbs (kg)	148.15(67.2)

* Condensing unit above or below indoor unit

Performance

Ductless		
Cooling Rated Capacity (DOE A2 - 95°F)		19000
Cooling Capacity Range		5400~28000
SEER2	Btu/h	25
EER2 (DOE A2 - 95°F)	Btu/h	15
Heating Rated Capacity (DOE H12 - 47°F)		20000
Heating Capacity Range		5700~27000
COP (DOE H12 - 47°F)	Btu/h	4
HSPF2 IV	Btu/h	10.5
HSPF2 V	Btu/h	8.5
Cooling Rated Capacity (DOE B2 - 82°F)	Btu/h	20000
EER2 (DOE B2 - 82°F)	Btu/h	20
Heating Rated Capacity (DOE H32 - 17°F)		17600
COP (DOE H32 - 17°F)	W/W	2.7
Heating Maximum Capacity (17°F)	W/W	19000
Heating Rated Capacity (ODE H42 - 5°F)	W/W	19000
COP (DOE H42 - 5°F)		2
Heating Maximum Capacity_5	Btu/h	19000
Cooling Capacity at 109 F (43°C)	Btu/h	19600
Heating Capacity at -4F (-20°C)	Btu/h	15000
Heating Capacity at -13F (-25°C)	Btu/h	12000
Heating Capacity at -22F (-30°C)	Btu/h	10000

Ducted		
Cooling Rated Capacity (DOE A2 - 95°F)		19000
Cooling Capacity Range		5400~27600
SEER2	Btu/h	20
EER2 (DOE A2 - 95°F)	Btu/h	13
Heating Rated Capacity (DOE H12 - 47°F)		20000
Heating Capacity Range		5700~25400
COP (DOE H12 - 47°F)	Btu/h	4
HSPF2 IV	Btu/h	10
HSPF2 V	Btu/h	8
Cooling Rated Capacity (DOE B2 - 82°F)	Btu/h	21000
EER2 (DOE B2 - 82°F)	Btu/h	18
Heating Rated Capacity (DOE H32 - 17°F)		17000
COP (DOE H32 - 17°F)	W/W	2.6
Heating Maximum Capacity (17°F)	W/W	22000
Heating Rated Capacity (ODE H42 - 5°F)	W/W	18000
COP (DOE H42 - 5°F)		2
Heating Maximum Capacity_5	Btu/h	18000
Cooling Capacity at 109 F (43°C)	Btu/h	24000
Heating Capacity at -4F (-20°C)	Btu/h	16000
Heating Capacity at -13F (-25°C)	Btu/h	13600
Heating Capacity at -22F (-30°C)	Btu/h	11000

Mixed		
Cooling Rated Capacity (DOE A2 - 95°F)		19000
Cooling Capacity Range		5400~27800
SEER2	Btu/h	22.5
EER2 (DOE A2 - 95°F)	Btu/h	14
Heating Rated Capacity (DOE H12 - 47°F)		20000
Heating Capacity Range		5700~26200
COP (DOE H12 - 47°F)	Btu/h	4
HSPF2 IV	Btu/h	10.25
HSPF2 V	Btu/h	8.25
Cooling Rated Capacity (DOE B2 - 82°F)	Btu/h	20500
EER2 (DOE B2 - 82°F)	Btu/h	19
Heating Rated Capacity (DOE H32 - 17°F)		17300
COP (DOE H32 - 17°F)	W/W	2.65
Heating Maximum Capacity (17°F)	W/W	20500
Heating Rated Capacity (ODE H42 - 5°F)	W/W	18500
COP (DOE H42 - 5°F)		2
Heating Maximum Capacity_5	Btu/h	18500
Cooling Capacity at 109 F (43°C)	Btu/h	21800
Heating Capacity at -4F (-20°C)	Btu/h	15500
Heating Capacity at -13F (-25°C)	Btu/h	12800
Heating Capacity at -22F (-30°C)	Btu/h	10500

CAC/BDP Copyright 2024 • Atlanta, GA, 30339
SUBJECT TO CHANGE WITHOUT NOTICE

AHRI CERTIFIED™ www.ahridirectory.org Unitary Small HP AHRI Standard 210/240 Certification applies only when the complete system is listed with AHRI.

Puron Advance™

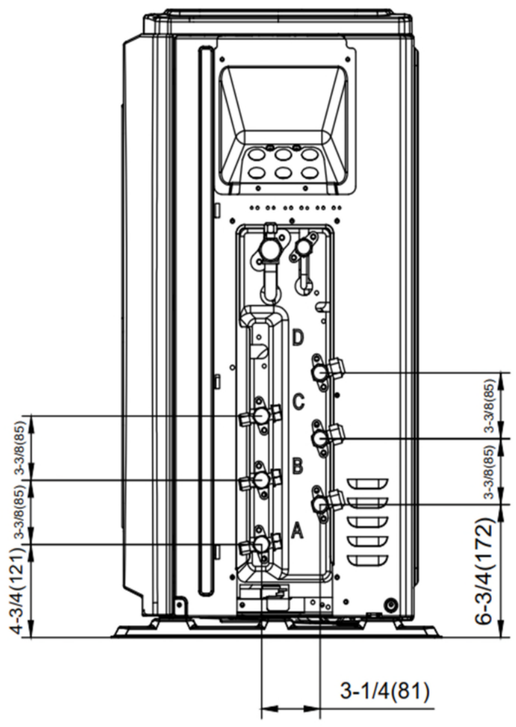

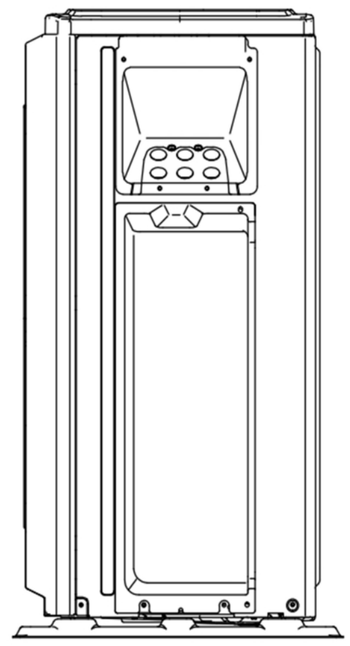

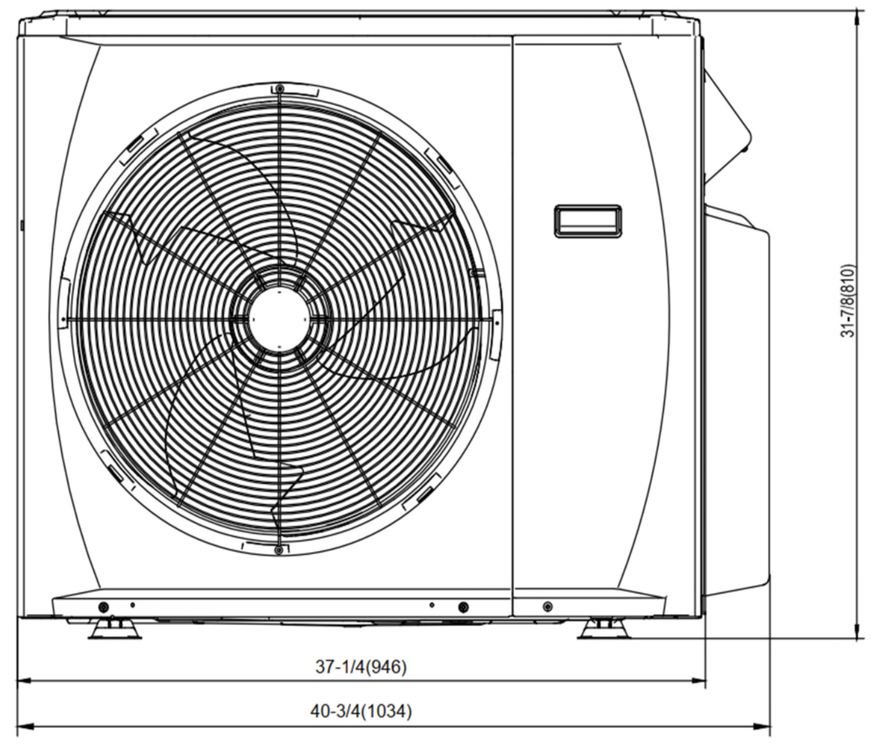

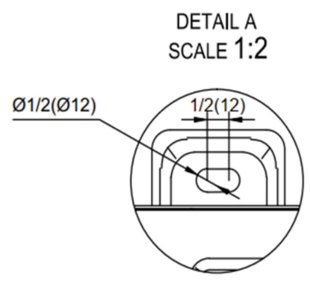

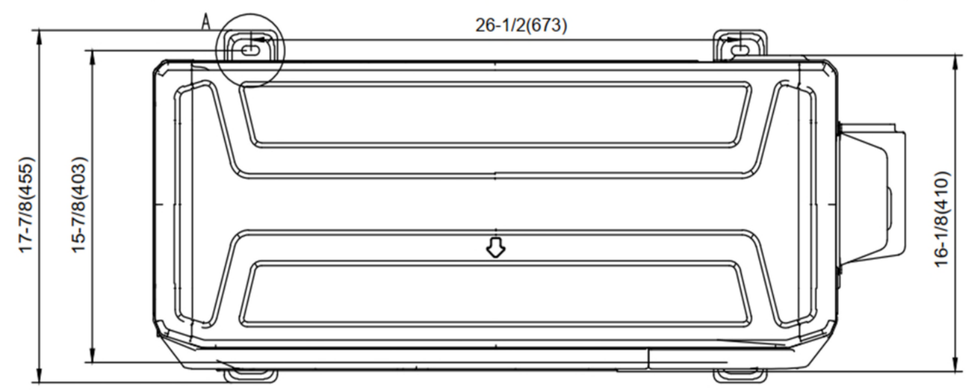

CAC/BDP Copyright 2024 • Atlanta, GA, 30339
SUBJECT TO CHANGE WITHOUT NOTICE

Puron Advance™