40GVC / 38GVC
40GVQ / 38GVQ
High–Wall Ductless Split Systems
Size 9K – 36K

Carrier
turn to the experts

Installation Instruction

NOTE: Read the entire instruction manual before starting the installation.

TABLE OF CONTENTS

PAGE

PARTS LIST 1

SAFETY CONSIDERATIONS 2

SYSTEM REQUIREMENTS 2-3

DIMENSIONS 4-6

CLEARANCES 7

INSTALLATION GUIDE 8

INDOOR UNIT INSTALLATION 8-9

- Install Mounting Plate 8
- Drill Hole in Wall for Interconnecting Piping, Drain and Wiring 9

OUTDOOR UNIT INSTALLATION 9-10

- Piping Connections 9
- Outdoor Unit Wiring Connections 10

INSTALL ALL POWER, INTERCONNECTING WIRING AND PIPING TO INDOOR UNIT 10

SYSTEM VACUUM AND CHARGE 11

START-UP 12

WIRING DIAGRAMS 13

TROUBLESHOOTING 14-17

The following parts are included in your indoor unit. Please contact your dealer if any parts are damaged or missing:

Parts	Qty
Mounting Plate	1
Mounting Hardware	7
Remote Control	1
Remote Control Holder	1
Battery (1.5V)	2

SAFETY CONSIDERATIONS

Installing, starting up, and servicing air-conditioning equipment can be hazardous due to system pressures, electrical components, and equipment location (roofs, elevated structures, etc.).

Only trained, qualified installers and service mechanics should install, start-up, and service this equipment.

Untrained personnel can perform basic maintenance functions such as cleaning coils. All other operations should be performed by trained service personnel.

When working on the equipment, observe precautions in the literature and on tags, stickers, and labels attached to the equipment.

Follow all safety codes. Wear safety glasses and work gloves. Keep quenching cloth and fire extinguisher nearby when brazing. Use care in handling, rigging, and setting bulky equipment.

Read these instructions thoroughly and follow all warnings or cautions included in literature and attached to the unit. Consult local building codes and current editions of the National Electrical Code (NEC) NFPA 70. In Canada, refer to current editions of the Canadian electrical code CSA 22.1.

Recognize safety information. This is the safety-alert symbol ⚠ . When you see this symbol on the unit and in instructions or manuals, be alert to the potential for personal injury.Understand these signal words: DANGER, WARNING, and CAUTION. These words are used with the safety-alert symbol. DANGER identifies the most serious hazards which **will** result in severe personal injury or death. WARNING signifies hazards which **could** result in personal injury or death. CAUTION is used to identify unsafe practices which **may** result in minor personal injury or product and property damage. NOTE is used to highlight suggestions which **will** result in enhanced installation, reliability, or operation.

⚠ WARNING

ELECTRICAL SHOCK HAZARD

Failure to follow this warning could result in personal injury or death.

Before installing, modifying, or servicing system, main electrical disconnect switch must be in the OFF position. There may be more than 1 disconnect switch. Lock out and tag switch with a suitable warning label.

⚠ CAUTION

EQUIPMENT DAMAGE HAZARD

Failure to follow this caution may result in equipment damage or improper operation.

Do not bury more than 36 in. (914 mm) of refrigerant pipe in the ground. If any section of pipe is buried, there must be a 6 in. (152 mm) vertical rise to the valve connections on the outdoor units. If more than the recommended length is buried, refrigerant may migrate to the cooler buried section during extended periods of system shutdown. This causes refrigerant slugging and could possibly damage the compressor at start-up.

GENERAL

These instructions cover the installation, start-up and servicing of 38GVC(Q) outdoor and 40GVC(Q) indoor units duct free systems.

SYSTEM REQUIREMENTS

Allow sufficient space for airflow and servicing unit. See Fig. 6 for minimum required distances between unit and walls or ceilings.

Piping

IMPORTANT: **Both refrigerant lines must be insulated separately.**

- Minimum refrigerant line length between the indoor and outdoor units is 10 ft. (3 m).
- The following maximum lengths are allowed:

REFRIGERANT LINE LENGTHS ft. (m)			
Unit Size	Max Line Length	Max Elevation (ID over OD)	Max Elevation (OD over ID)
9K	50 (15)	33 (10)	33 (10)
12K	50 (15)	33 (10)	33 (10)
18, 24K	82 (25)	33 (10)	33 (10)
30, 36K	98 (30)	33 (10)	33 (10)

- The following are the piping sizes.

PIPE SIZES		
Unit Size	Mix Phase	Vapor
9, 12K	1/4”	3/8”
18, 24K	1/4”	1/2”
30, 36K	1/4”	5/8”

Refrigerant Charge

Unit Size	Charge Amount * LBS (kg)		Additional Charge Amount ** oz/ft (g/m)		Metering Device ***	
	Cool Only	Heat Pump	Cool Only	Heat Pump	Cool Only	Heat Pump
9K	2.31 (1.05)	2.31 (1.05)	0.16 (15)	0.16 (15)	Capillary	Capillary
12K 115v	2.54 (1.15)	2.54 (1.15)	0.16 (15)	0.22 (20)	Capillary	Capillary
12K 208/230v	2.2 (1.00)	2.2 (1.0)	0.16 (15)	0.22 (20)	Capillary	Capillary
18K	2.75 (1.25)	2.87 (1.30)	0.16 (15)	0.22 (20)	Capillary	Capillary
24K	3.42 (1.55)	3.42 (1.55)	0.16 (15)	0.22 (20)	EXV	EXV
30K	– – – –	5.29 (2.40)	– – – –	0.54 (50)	– – – –	EXV
36K	5.30 (2.40)	5.73 (2.60)	0.54 (50)	0.54 (50)	Capillary	EXV

* Charge is for piping that runs up to 25 ft. (7.6 m)

** For piping runs greater than 25 ft. (7.6 m), add specified amount of charge per foot of extra piping, up to the allowable length.

*** EXV – Electronic Expansion Device, Capillary tubes are used as metering devices

Connecting (Power and Control Cable)

- The main power is supplied to the outdoor unit. The field supplied connecting cable from the outdoor unit to indoor unit consists of four wires and provides the power for the indoor unit as well as the communication signal and ground between the outdoor and indoor unit.
  Two wires are high voltage AC power, one is low voltage DC signal, and one is a ground wire.
- Consult local building codes, NEC (National Electrical Code) or CEC (Canadian Electrical Code) for special requirements.

⚠ CAUTION

EQUIPMENT DAMAGE HAZARD

Failure to follow this caution may result in equipment damage or improper operation.

- Wires should be sized based on NEC and local codes.
- Use copper conductors only with a minimum 300 volt . rating and 2/64 inch thick insulation.

⚠ CAUTION

EQUIPMENT DAMAGE HAZARD

Failure to follow this caution may result in equipment damage or improper operation.

- Be sure to comply with local codes while running wire from indoor unit to outdoor unit.
- Every wire must be connected firmly. Loose wiring may cause terminal to overheat or result in unit malfunction. A fire hazard may also exist. Therefore, be sure all wiring is tightly connected.
- No wire should be allowed to touch refrigerant tubing, compressor or any moving parts.
- Disconnecting means must be provided and shall be located within sight and readily accessible from the air conditioner.
- Connecting cable with conduit shall be routed through hole in the conduit panel.

- **Connecting Cable:** Voltage drop on the connecting cable should be kept to a minimum. Do not use thermostat wire.

Electrical Data

Unit Size	System Voltage Volts–Ph.–Freq.	Operating Voltage	Compressor		Outdoor Fan			Indoor Fan			MCA	Max Fuse/CB Amps (MOCP)
		(Min/Max)	RLA	LRA	Volts	FLA	Output Watts	Volts	FLA	Output Watts		
9K–AC	115–1–60	103/127	9.76	25	115 AC	0.17	30	115 V–AC	0.38	15.0	13	20
9K–HP	115–1–60	103/127	9.76	20	176–375 DC	0.17	30	115 V–AC	0.38	15.0	13	20
12K–AC	115–1–60	103/127	11.20	25	115 AC	0.17	30	115 V–AC	0.38	15.0	15	25
12K–HP	115–1–60	103/127	11.20	20	176–375 DC	0.17	30	115 V–AC	0.38	15.0	15	25
12K	208/230–1–60	187/253	7.30	16.5	208/230 AC	0.25	21	208/230 V–AC	0.19	15.0	10	15
18K	208/230–1–60	187/253	10.86	27	208/230 AC	0.62	60	208/230 V–AC	0.32	20.0	15	25
24K	208/230–1–60	187/253	11.71	41	208/230 AC	0.62	60	208/230 V–AC	0.45	35.0	16	25
30K	208/230–1–60	187/253	13.45	40	310 DC	0.45	100	208/230 V–AC	0.40	40.0	20	30
36K–AC	208/230–1–60	187/253	16.92	67	310 DC	0.73	100	208/230 V–AC	0.47	60.0	24	35
36K–HP	208/230–1–60	187/253	17.50	67	310 DC	0.73	170	208/230 V–AC	0.47	60.0	24	40

DIMENSIONS - INDOOR

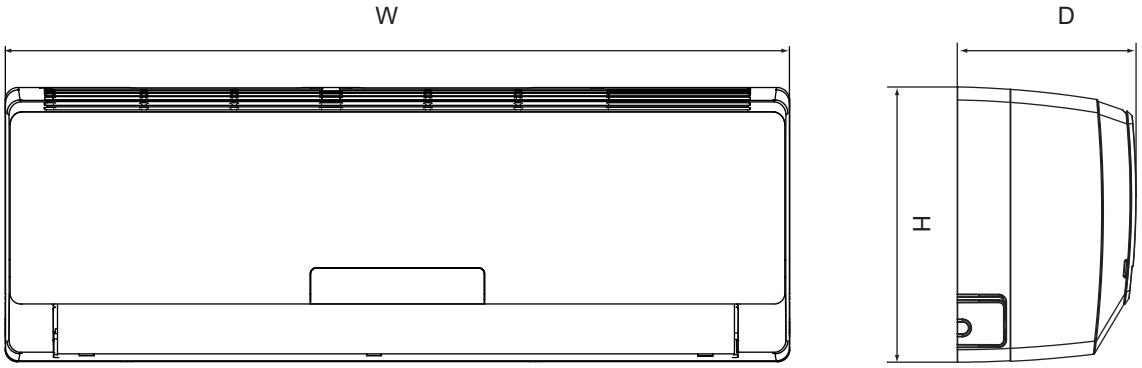

A12377

Unit Size	W In. (mm)	H In. (mm)	D In. (mm)	Net Operating Weight Lbs. (Kg)
9K	30.3 (770)	11.1 (283)	7.9 (201)	18.7 (8.5)
12K	30.3 (770)	11.1 (283)	7.9 (201)	19.8 (9.0)
18K	34.0 (865)	12.0 (305)	8.5 (215)	26.5 (12.0)
24K	39.7 (1008)	12.6 (319)	8.7 (221)	33.1 (15.0)

Fig. 1 – Indoor Unit Dimensions

DIMENSIONS - OUTDOOR

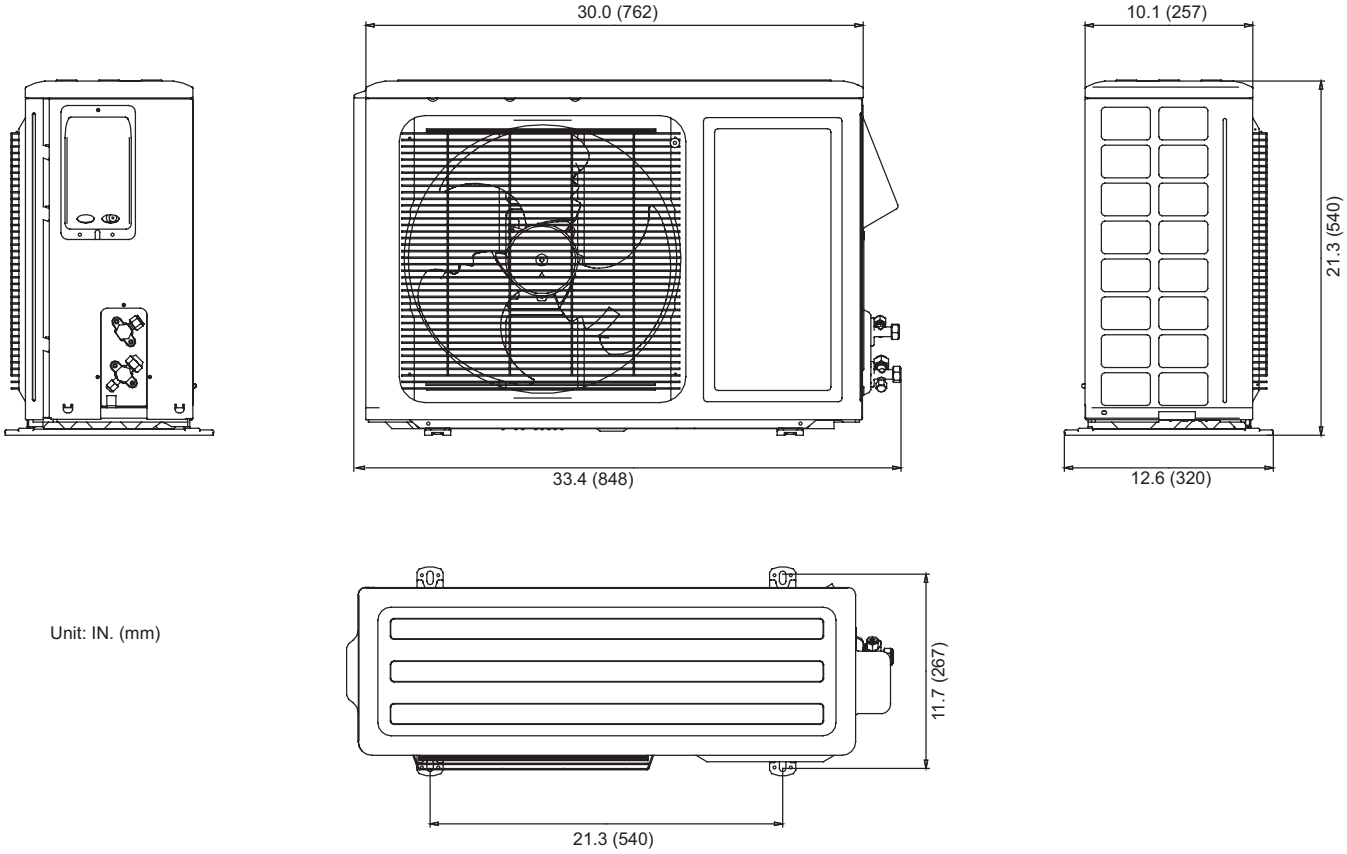

A12531

Fig. 2 – 9K and 12K 115V (Net Operating Weight: 75 lbs. / 34 kg)

DIMENSIONS - OUTDOOR CONTINUED

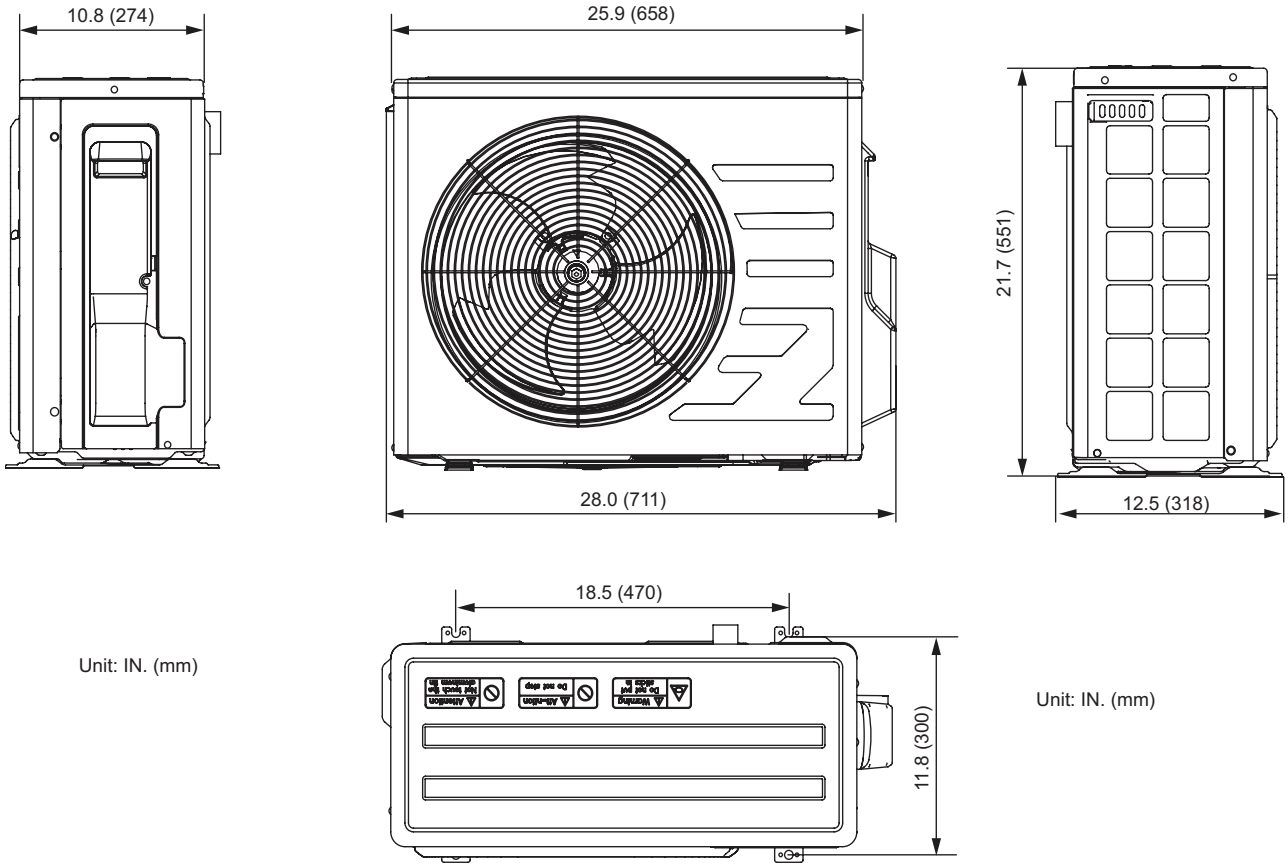

Fig. 3 – 12K 230V (Net Operating Weight: 63.8 lbs. / 30 kg)

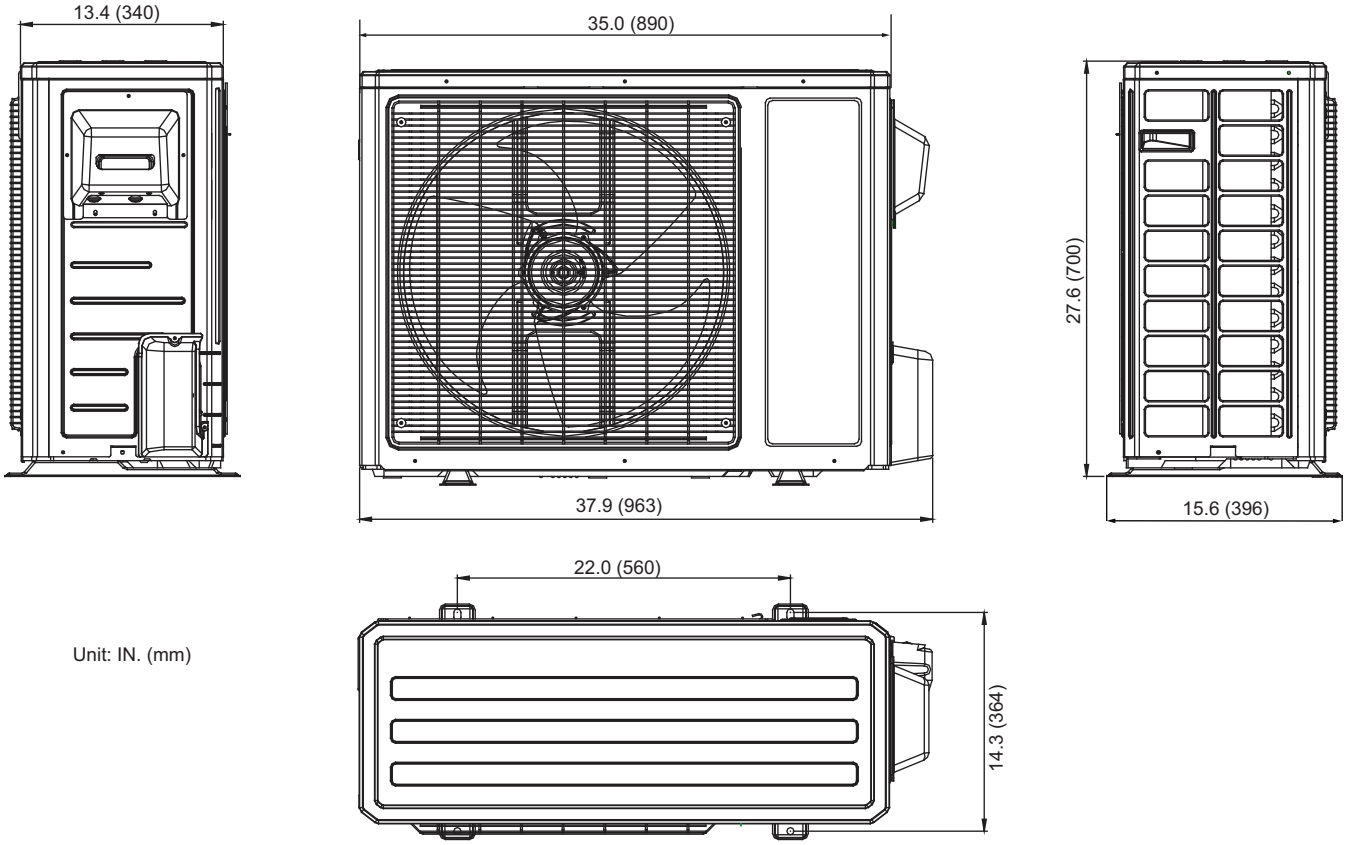

Fig. 4 – 18K and 24K (Net Operating Weight: 112.2 lbs. / 51 kg)

DIMENSIONS - OUTDOOR CONTINUED

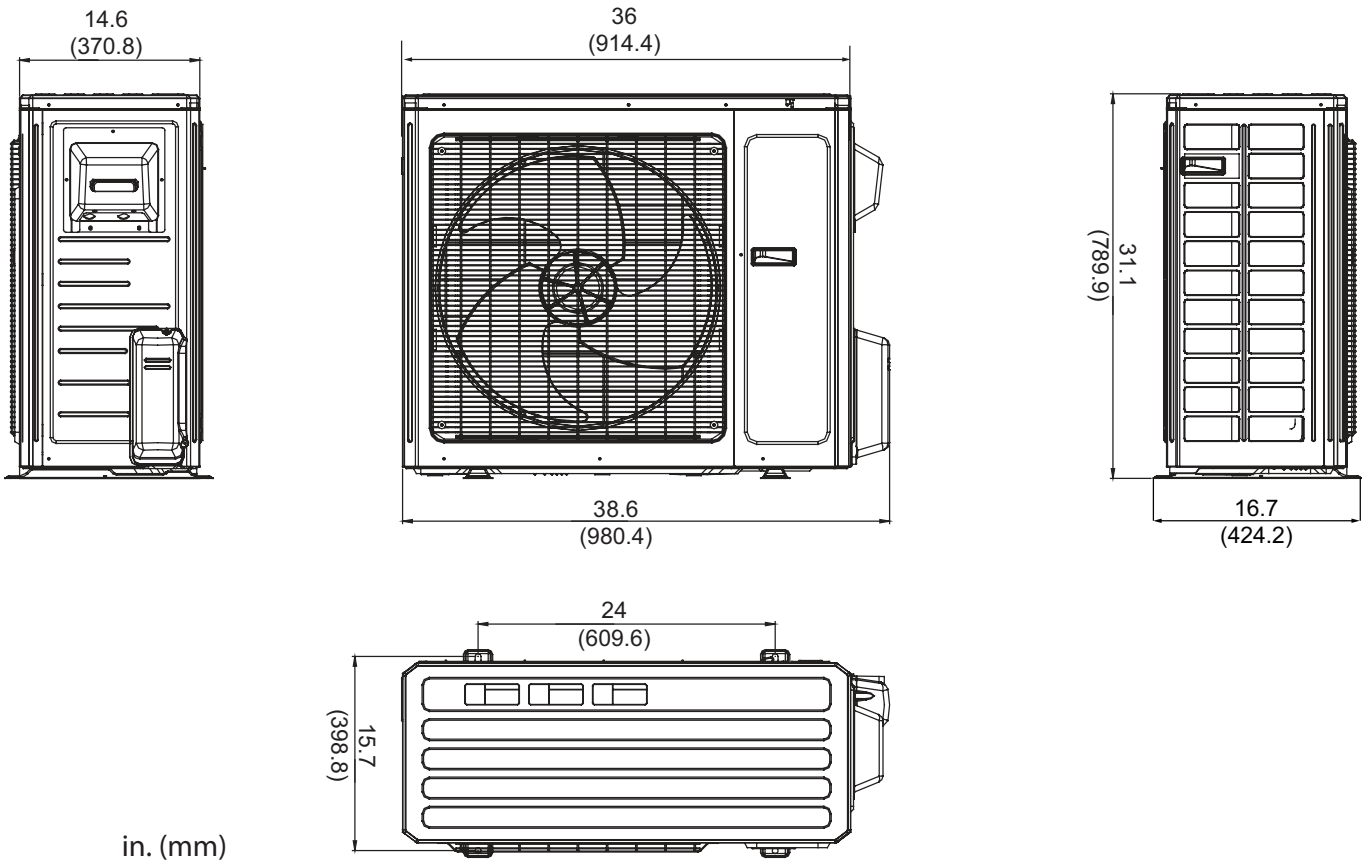

Fig. 5 – 30K and 36K (Net Operating Weight: 30K = 154 lbs. / 70 kg; 36K = 161 lbs. / 73 kg)

CLEARANCES

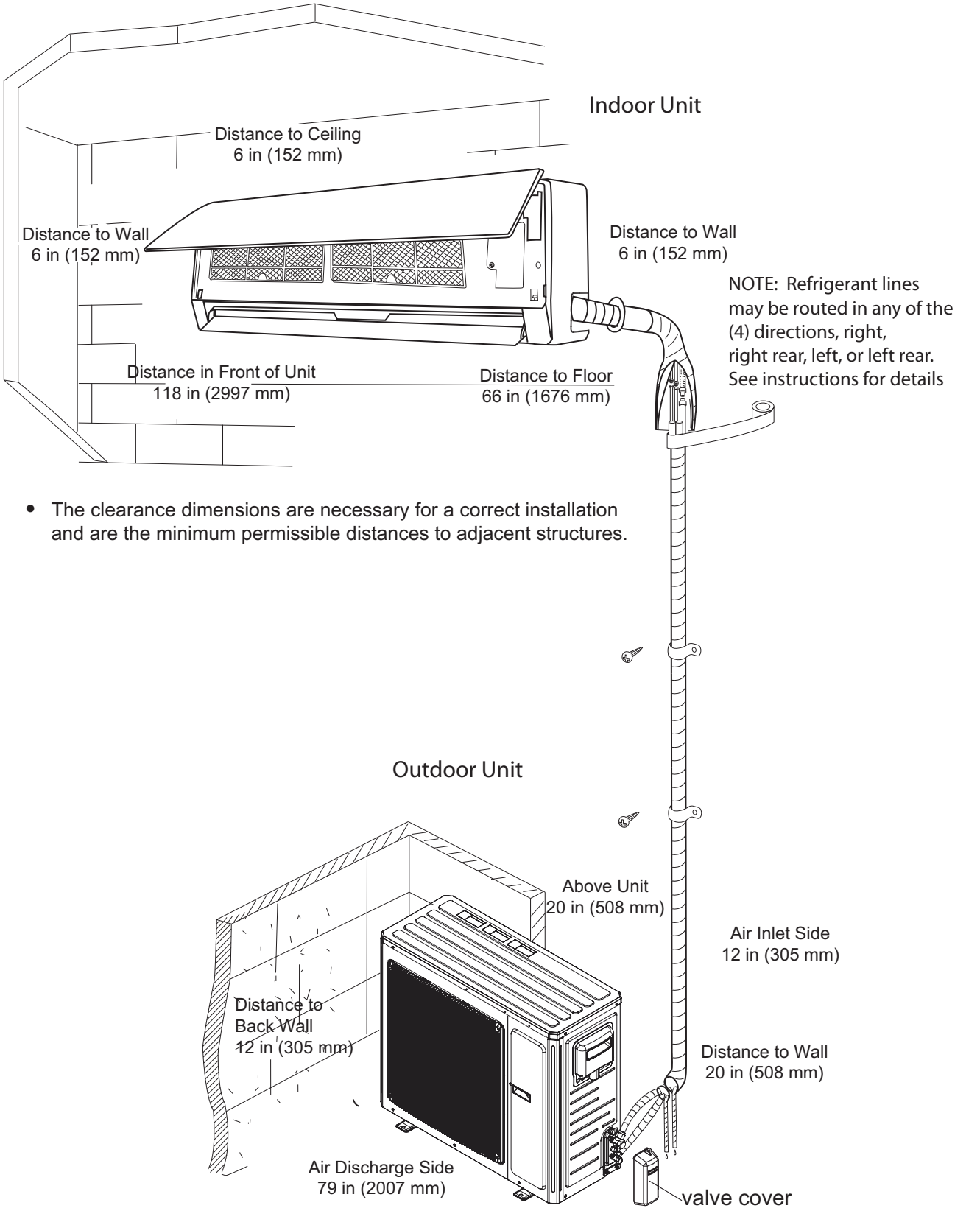

- The clearance dimensions are necessary for a correct installation and are the minimum permissible distances to adjacent structures.

Fig. 6 – Indoor and Outdoor Unit Clearances

INSTALLATION GUIDE

Ideal installation locations include:

Indoor Unit

- A location where there are no obstacles near inlet and outlet area.
- A location which can bear the weight of indoor unit.
- Do not install indoor units near a direct source of heat such as direct sunlight or a heating appliance.
- A location which provides appropriate clearances as outlined in Fig. 6. Be sure to leave enough distance to allow access for routine maintenance. The installation site should be 66 in (1676 mm) or more above the floor.
- Select a place away from potential electronic interference.
- Select a place where the filter can be easily removed.

Outdoor Unit

- A location which is convenient to installation and not exposed to strong wind.
- A location which can bear the weight of outdoor unit and where the outdoor unit can be mounted in a level position.
- A location which provides appropriate clearances as outlined in Fig. 6.
- Do not install the indoor or outdoor units in a location with special environmental conditions.
- Make sure the outdoor unit is installed in accordance with the installation instructions and is convenient for maintenance and repair.
- See the refrigerant piping table for the maximum height difference between indoor and outdoor units and the maximum length of the connecting tubing.

INDOOR UNIT INSTALLATION

INSTALL MOUNTING PLATE

1. Carefully remove the mounting plate from the unit box.
2. The mounting plate should be located horizontally and level on the wall. All minimum spacings shown in Fig. 7 through Fig. 10 should be maintained.
3. If the wall is block, brick, concrete or similar material, drill .2" (5 mm) diameter holes and insert anchors for the appropriate mounting screws.
4. Attach the mounting plate to the wall.

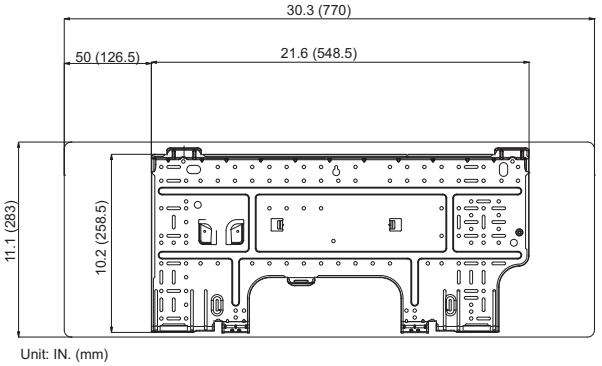

A12534

Fig. 7 – 09 and 12K Mounting Plate Spacing

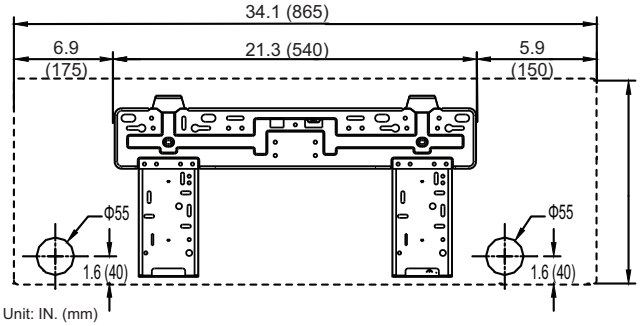

A12535

Fig. 8 – 18k Mounting Plate Spacing

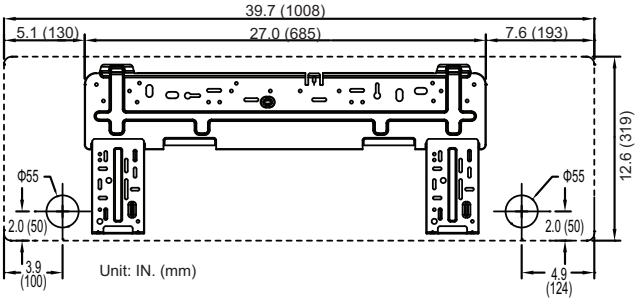

A12536

Fig. 9 – 24k Mounting Plate Spacing

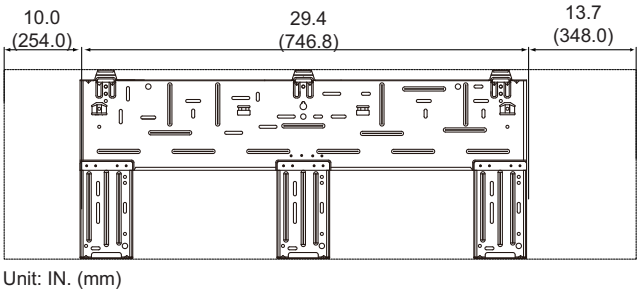

A12584

Fig. 10 – 30/36k Mounting Plate Spacing

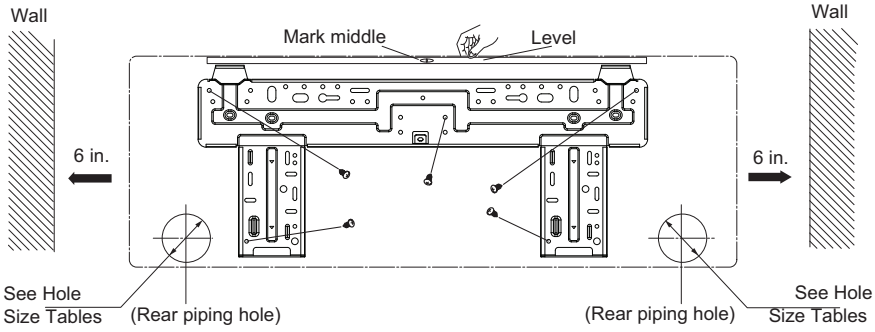

A12537

Fig. 11 – Mounting Plate Spacing

DRILL HOLE IN WALL FOR INTERCONNECTING PIPING, DRAIN AND WIRING

Refrigerant Line Routing

The refrigerant lines may be routed in any of the four directions shown in Fig. 12.

For maximum serviceability, it is recommended to have refrigerant line flare connections and the drain connection on the outside of the wall that the fan coil is mounted on.

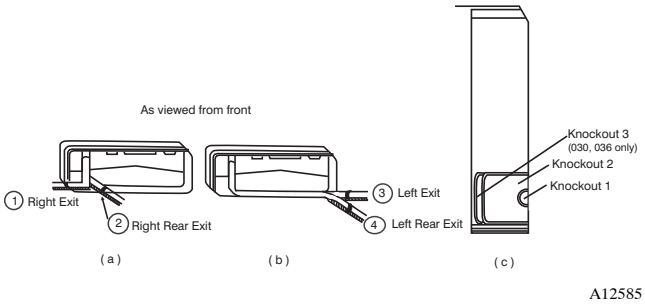

Fig. 12 – Refrigerant Line Routing

If piping is going through the back:

1. Determine pipe hole position using the mounting plate as a template. Drill pipe hole diameter per chart below. The outside pipe hole is 1/2-in. (13 mm) min. lower than inside pipe hole, so it slants slightly downward (see Fig. 13).
   If piping is going to exit from the left rear, it is recommended to field-fabricate piping extensions to get the flare connections to the outside of the wall.

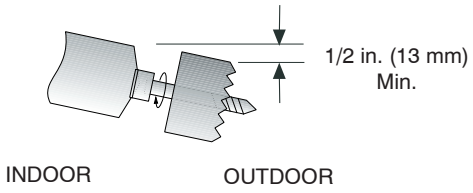

Model Size	Hole Diameter in. (mm)
9k, 12k and 18k	2.2 (56)
24k, 30k, 36k	2.8 (71)

Fig. 13 – Drill Holes

If piping is going through the right or left side:

1. Use a small saw blade to carefully remove the corresponding plastic covering on side panel and drill the appropriate size hole where the pipe is going through the wall. See Fig. 19.
2. Remove knockout 1 to run just the wiring. Remove knockout 1 and 2 or knockout 1, 2 and 3 if you are running both piping and wiring through the side of the unit. See Fig. 12.

NOTE: If required, a condensate pump is available for the application.

OUTDOOR UNIT INSTALLATION

1. Use a rigid base to support unit in a level position.
2. Locate outdoor unit and connect piping and wiring.

⚠ CAUTION

EQUIPMENT DAMAGE HAZARD

Failure to follow this caution may result in equipment damage or improper operation.

Excessive torque can break flare nut depending on installation conditions.

Piping Connections to Outdoor Unit

IMPORTANT: Use refrigeration grade tubing ONLY. No other type of tubing may be used. Use of other types of tubing will void manufacturer's warranty.
Make sure there is enough piping to cover the required length between the outdoor and indoor unit.
Only use piping suitable for high side pressure for both high side and low side connections.

Piping Guide:

- Do not open service valves or remove protective caps from tubing ends until all the connections are made.
- Bend tubing with bending tools to avoid kinks and flat spots.
- Keep the tubing free of dirt, sand, moisture, and other contaminants to avoid damaging the refrigerant system.
- Avoid sags in the suction line to prevent the formation of oil traps. Insulate each tube with minimum 3/8-in. (10 mm) wall thermal pipe insulation. Inserting the tubing into the insulation before making the connections will save time and improve installation quality.
  1. Remove service valve cover if provided with unit.
  2. Cut tubing with tubing cutter.
  3. Install correct size flare nut onto tubing and make flare connection.
  4. Apply a small amount of refrigerant oil to the flare connection on the tubing.
  5. Properly align tubing in with service valve.
  6. Tighten flare nut and finish installation using two wrenches as shown in Fig. 14.

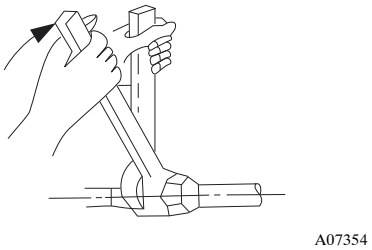

Fig. 14 – Tighten Flare Nut

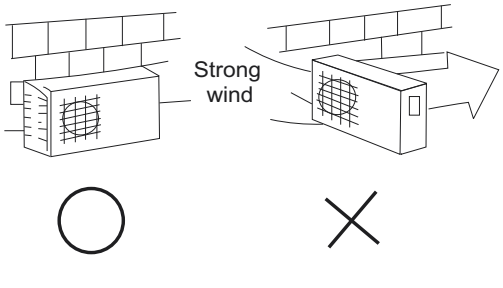

Fig. 15 – High Wind Installation

Outdoor Unit Wiring Connections

1. Mount outdoor power disconnect.
2. Run power wiring from main box to disconnect per NEC and local codes. Set outdoor unit in place.
3. Remove field wiring cover from unit by removing screws.
4. Connect conduit to the conduit panel. (See Fig. 16)
5. Properly connect both power supply and control lines to terminal block per the connection diagram.
6. Ground unit in accordance with NEC and local electrical codes.
7. Use lock nuts to secure conduit.
8. Reinstall field wiring cover.

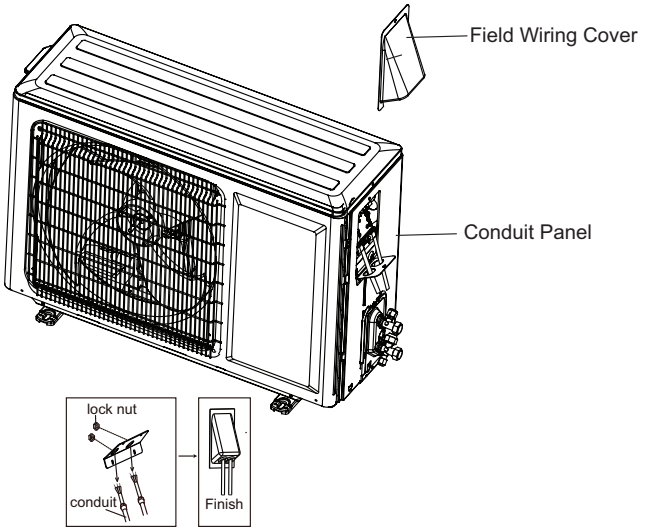

A12539

Fig. 16 – Field Wiring

⚠ CAUTION

EQUIPMENT DAMAGE HAZARD

Failure to follow this caution may result in equipment damage or improper operation.

- Be sure to comply with local codes while running wire from indoor unit to outdoor unit.
- Every wire must be connected firmly. Loose wiring may cause terminal to overheat or result in unit malfunction. A fire hazard may also exist. Therefore, be sure all wiring is tightly connected.
- No wire should be allowed to touch refrigerant tubing, compressor or any moving parts.
- Disconnecting means must be provided and shall be located within sight and readily accessible from the air conditioner.
- Connecting cable with conduit shall be routed through hole in the conduit panel.

INSTALL ALL POWER, INTERCONNECTING WIRING, AND PIPING TO INDOOR UNIT.

1. Run interconnecting piping and wiring from outdoor unit to indoor unit.
2. Pass interconnecting cable through hole in wall (outside to inside).
3. Lift indoor unit into position and route piping and drain through hole in wall (inside to outside). Fit interconnecting wiring into back side of indoor unit.
4. Hang indoor unit on upper hooks of wall mounting plate (as shown in Fig. 17 and Fig. 20)

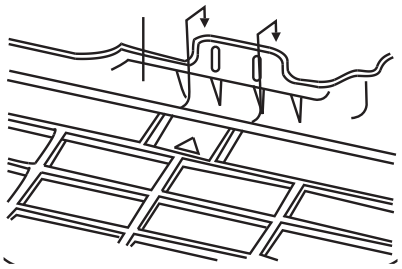

A08283

Fig. 17 – Hanging Indoor Unit

5. Open front cover of indoor unit and remove field wiring terminal block cover (see Fig. 18)

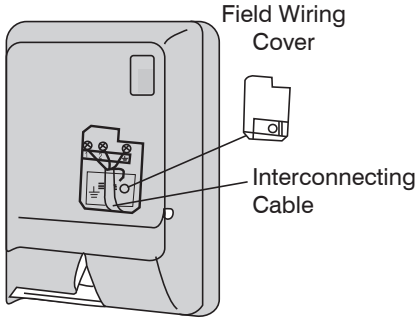

A08279

Fig. 18 – Field Wiring Cover

6. Pull interconnecting wire up from back of indoor unit and position in close to the terminal block on indoor unit.
7. Push bottom of indoor unit onto mounting plate to complete wall mount.
8. Connect wiring from outdoor unit per connection diagram (see Fig. 26).

NOTE: Polarity of power wires must match original connection on outdoor unit.

9. Replace field wiring cover and close front cover of indoor unit.
10. Connect refrigerant piping and drain line outside of indoor unit. Refer to Fig. 14 for proper installation of flare connections. Complete pipe insulation at flare connection then fasten piping and wiring to the wall as required. Completely seal the hole in the wall.

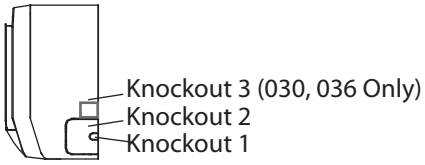

A12540

Fig. 19 – Remove Knockouts

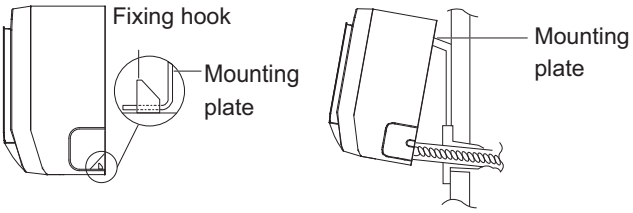

A12408

Fig. 20 – Hang Indoor Unit

⚠ CAUTION

UNIT DAMAGE HAZARD

Failure to follow this caution may result in equipment damage or improper operation.

Never use the system compressor as a vacuum pump.

Refrigerant tubes and indoor coil should be evacuated using the recommended deep vacuum method of 500 microns. The alternate triple evacuation method may be used if the procedure outlined below is followed. Always break a vacuum with dry nitrogen.

SYSTEM VACUUM AND CHARGE

Using Vacuum Pump

1. Completely tighten flare nuts A, B, C, D, connect manifold gage charge hose to a charge port of the low side service valve. (See Fig. 21.)
2. Connect charge hose to vacuum pump.
3. Fully open the low side of manifold gage. (See Fig. 22)
4. Start vacuum pump
5. Evacuate using either deep vacuum or triple evacuation method.
6. After evacuation is complete, fully close the low side of manifold gage and stop operation of vacuum pump.
7. The factory charge contained in the outdoor unit is good for up to 25 ft. (8 m) of line length. For refrigerant lines longer than 25 ft (8 m), add 0.1 oz. per foot of extra piping up to the maximum allowable length.
8. Disconnect charge hose from charge connection of the low side service valve.
9. Fully open service valves B and A.
10. Securely tighten caps of service valves.

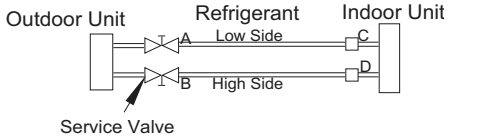

A07360

Fig. 21 – Service Valve

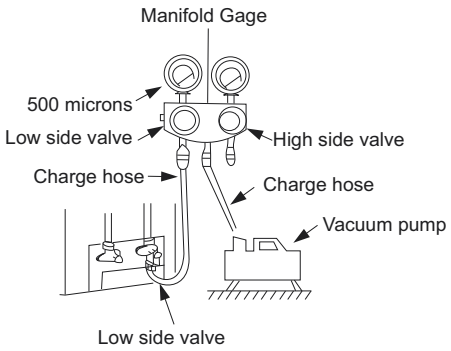

A07361

Fig. 22 – Manifold

Deep Vacuum Method

The deep vacuum method requires a vacuum pump capable of pulling a vacuum of 500 microns and a vacuum gage capable of accurately measuring this vacuum depth. The deep vacuum method is the most positive way of assuring a system is free of air and liquid water. (See Fig. 23)

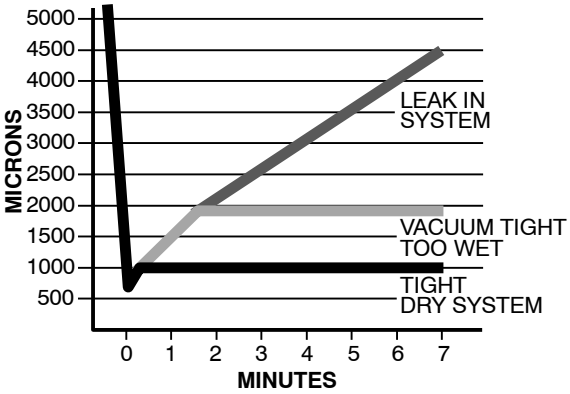

A95424

Fig. 23 – Deep Vacuum Graph

Triple Evacuation Method

The triple evacuation method should only be used when vacuum pump is only capable of pumping down to 28 in. of mercury vacuum and system does not contain any liquid water.

Refer to Fig. 24 and proceed as follows:

1. Pump system down to 28 in. of mercury and allow pump to continue operating for an additional 15 minutes.
2. Close service valves and shut off vacuum pump.
3. Connect a nitrogen cylinder and regulator to system and open until system pressure is 2 psig.
4. Close service valve and allow system to stand for 1 hr. During this time, dry nitrogen will be able to diffuse throughout the system absorbing moisture.
5. Repeat this procedure as indicated in Fig. 24. System will then be free of any contaminants and water vapor.

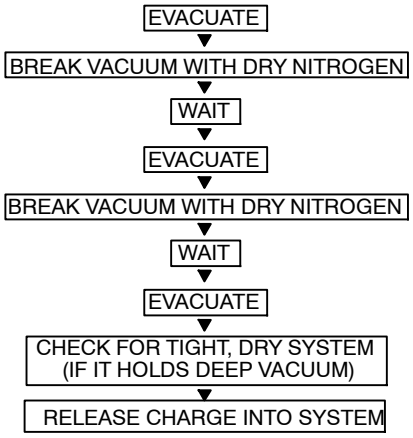

A95425

Fig. 24 – Triple Evacuation Method

Final Tubing Check

IMPORTANT: Check to be certain factory tubing on both indoor and outdoor unit has not shifted during shipment. Ensure tubes are not rubbing against each other or any sheet metal. Pay close attention to feeder tubes, making sure wire ties on feeder tubes are secure and tight.

Test Operation

Perform test operation after completing gas leak and electrical safety check.

1. Push the "ON/OFF" button on Remote Control to begin testing.

NOTE: A protection feature prevents the air conditioner from being activated for approximately 3 minutes.

2. Push MODE button, select COOLING, HEATING, FAN mode to check if all functions work correctly.

SYSTEM CHECKS

1. Conceal the tubing where possible.
2. Make sure that the drain tube slopes downward along its entire length.
3. Ensure all tubing and connections are properly insulated.
4. Fasten tubes to the outside wall, when possible.
5. Seal the hole through which the cables and tubing pass.

INDOOR UNIT

1. Do all Remote Control buttons function properly?
2. Do the display panel lights work properly?
3. Does the air deflection louver function properly?
4. Does the drain work?

OUTDOOR UNIT

1. Are there unusual noises or vibrations during operation?

Explain Following Items To Customer With The Aid Of The Owner's Manual:

1. How to turn air conditioner on and off; selecting COOLING, HEATING and other operating modes; setting a desired temperature; setting the timer to automatically start and stop air conditioner operation; and all other features of the Remote Control and display panel.
2. How to remove and clean the air filter.
3. How to set air deflection louver.
4. Explain care and maintenance.
5. Present the Owner's Manual and installation instructions to customer.

INSTALLATION AND MAINTENANCE OF FILTER

1. Grasp the front panel by it's two ends and lift the panel and then remove the air filter.
2. Install a clean air filter along the arrow direction and close the panel.

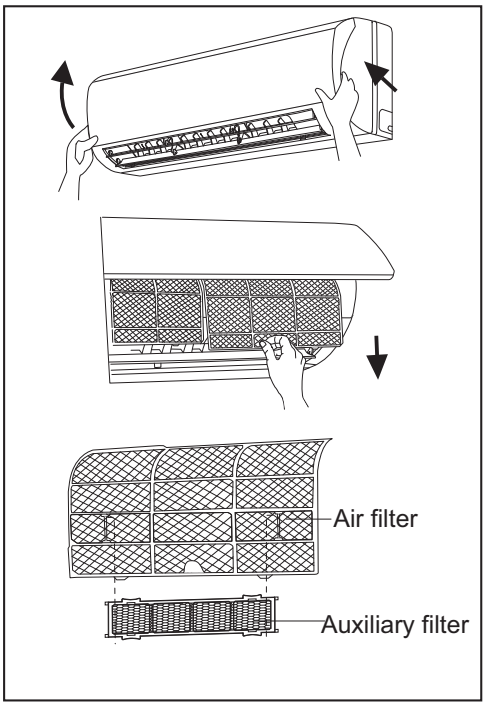

A12541

Fig. 25 – Install Air Filter

WIRING DIAGRAMS

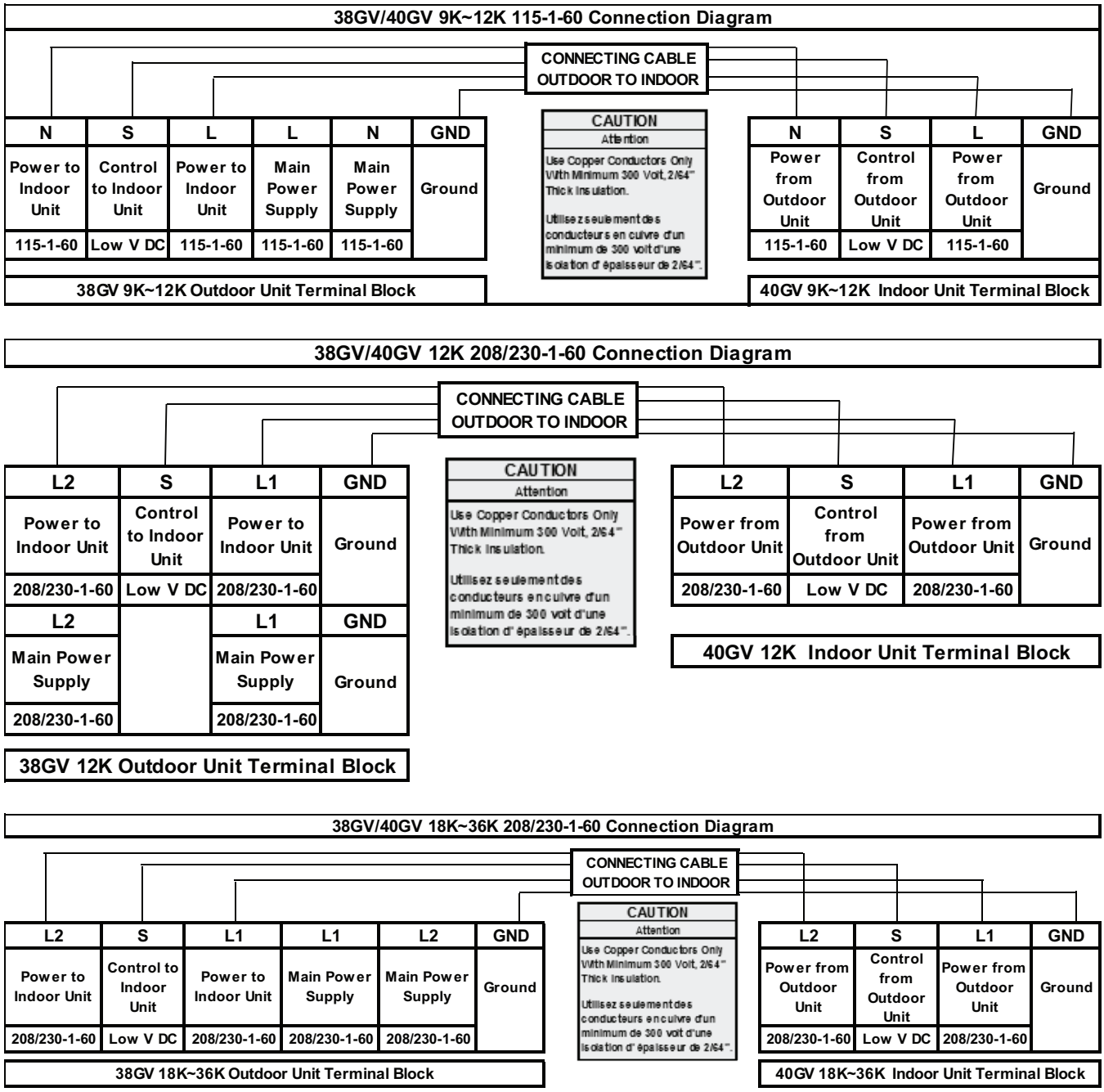

NOTE: **Polarity of power wires must match original connection on outdoor unit.**

A12542

Fig. 26 – Unit Wiring Diagrams

TROUBLESHOOTING

This unit has on-board diagnostics. Error codes will appear on the LED display on the front panel of the indoor unit in place of the temperature display. Error codes are also displayed on the outdoor unit microprocessor board with colored LED lights. The table below explains the error codes for both units.

Diagnostic Codes
38/40GVC/Q 9k / 12k, 115v

Malfunction	Error Code on indoor unit	Repair Method/Cause
Indoor PCB Malfunction	EE	Replace indoor main board
Anti–freeze Protection	E2	Outdoor ambient temperature is too low
System overload protection	H4	Check for dirty or blocked heat exchangers
Indoor motor malfunction	H6	Check motor mounting and wiring
Indoor pipe temperature sensor malfunction	F2	Measure the resistance value in the sensor
Return air temperature sensor malfunction	F1	Measure the resistance value in the sensor
Indoor board malfunction	UF	Replace indoor main board
Compressor overload protection	H3	Check overload wiring
Compressor start–up failure	Lc	Check if the resistance of the compressor and the resistance to ground is normal. If the resistance is normal, the outdoor main board may be defective.
Outdoor fan motor failure	UH	Check outdoor motor
Low voltage protection	E5	Check incoming power
4–way valve malfunction	U7	Replace 4–way valve
Compressor phase detection error	U1	Replace outdoor main board
Compressor speed reduction	H7	Check if the resistance of the compressor and the resistance to ground is normal. If the resistance is normal, the outdoor main board may be defective.
Current detection malfunction	U5	Replace outdoor main board
Outdoor ambient temperature sensor malfunction	F3	Measure the resistance value in the sensor
Discharge temperature sensor malfunction (out of range)	E4	Measure the resistance value in the sensor
Discharge temperature sensor malfunction (open or shorted)	F5	Measure the resistance value in the sensor
Condenser temperature sensor malfunction (open or shorted)	F4	Measure the resistance value in the sensor
Heat sink over–temperature	P8	Is outdoor ambient temperature out of system operating range? Is heat sink blocked or damaged?
DC over–current	UU	– –
Heat sink temperature sensor malfunction	P7	Replace outdoor main board
Low charge	F0	Check for leaks
DC input voltage is too high	PH	Check incoming power supply
DC input voltage is too low	PL	Check incoming power supply
Communication malfunction	E6	Check wiring connection
Indoor and outdoor unit mismatched	UA	Check system combination

Diagnostic Codes
38/40GVC/Q 12K, 230v

Malfunction	Error Code on indoor unit	Repair Method/Cause
Indoor PCB Malfunction	EE	Replace indoor main board
Anti–freeze Protection	E2	Outdoor ambient temperature is too low
System overload protection	H4	Check for dirty or blocked heat exchangers
Indoor motor malfunction	H6	Check motor mounting and wiring
Indoor pipe temperature sensor malfunction	F2	Measure the resistance value in the sensor
Return air temperature sensor malfunction	F1	Measure the resistance value in the sensor
Indoor board malfunction	UF	Replace indoor main board
Compressor overload protection	H3	Check overload wiring
Compressor start–up failure	Lc	Check if the resistance of the compressor and the resistance to ground is normal. If the resistance is normal, the outdoor main board may be defective.
Outdoor fan motor failure	UH	Check outdoor motor
Low voltage protection	E5	Check incoming power
4–way valve malfunction	U7	Replace 4–way valve
Compressor phase detection error	U1	Replace outdoor main board
Compressor speed reduction	H7	Check if the resistance of the compressor and the resistance to ground is normal. If the resistance is normal, the outdoor main board may be defective.
Current detection malfunction	U5	Replace outdoor main board
Outdoor ambient temperature sensor malfunction	F3	Measure the resistance value in the sensor
Discharge temperature sensor malfunction (out of range)	E4	Measure the resistance value in the sensor
Discharge temperature sensor malfunction (open or shorted)	F5	Measure the resistance value in the sensor
Condenser temperature sensor malfunction (open or shorted)	F4	Measure the resistance value in the sensor
Heat sink over temperature	P8	Is outdoor ambient temperature out of system operating range? Is heat sink blocked or damaged?
DC over–current	H5	– –
Heat sink temperature sensor malfunction	P7	Replace outdoor main board
Low charge	F0	Check for leaks
DC input voltage is too high	PH	Check incoming power supply
DC input voltage is too low	PL	Check incoming power supply
Communication malfunction	E6	Check wiring connection
Indoor and outdoor unit mismatched	UA	Check system combination

Diagnostic Codes
38/40GVC/Q 18k-24k, 230v

Malfunction	Error Code on indoor unit	Repair Method/Cause
System high pressure protection	E1	Poor heat exchange. Are the coils clogged or blocked? Is the ambient temperature out of system range?
Anti–freeze Protection	E2	Outdoor ambient temperature is too low
Discharge temperature sensor malfunction (out of range)	E4	Measure the resistance value in the sensor
Low voltage protection	E5	Check incoming power
Communication malfunction	E6	Check wiring connection
System overload protection	E8	Refer to Service Manual
Indoor board malfunction	U8	Replace indoor main board
Indoor motor malfunction	H6	Check motor mounting and wiring
Missing jumper from indoor board	C5	No jumper on controller or installed improperly or damaged. Corresponding circuit on main board has malfunction.
Return air temperature sensor malfunction	F1	Measure the resistance value in the sensor
Indoor pipe temperature sensor malfunction	F2	Measure the resistance value in the sensor
Outdoor ambient temperature sensor malfunction	F3	Measure the resistance value in the sensor
Condenser temperature sensor malfunction (open or shorted)	F4	Measure the resistance value in the sensor
Discharge temperature sensor malfunction (open or shorted)	F5	Measure the resistance value in the sensor
Overload limit, compressor speed reduction	F6	Refer to Service Manual
Over current compressor speed reduction	F8	System voltage is too low or system voltage is high
Compressor discharge temperature high, compressor speed reduction	F9	Load is too great Ambient temperature too high Refrigerant is low Electric expansion valve malfunction
Over voltage protection	PH	Check incoming power supply
Current detection malfunction	U5	Replace outdoor main board
Compressor current protection	P5	Refer to Service Manual. Check inverter board.
Defrosting	H1	H1 signal normal operation
Compressor overload protection	H3	Check overload wiring
System overload protection	H4	Checked for dirty or blocked heat exchangers
IPM protection	H5	IPM module over temperature, low voltage, silica grease problem
PFC (power factor correction) board protection	HC	Refer to Service Manual
Compressor speed reduction	H7	Check if the resistance of the compressor and the resistance to ground is normal. If the resistance is normal, the outdoor main board may be defective.
Ambient temperature cut off range	H0	Refer to Service Manual (overload, high temperature, cutout)
Compressor start–up failure	LC	Check if the resistance of the compressor and the resistance to ground is normal. If the resistance is normal, the outdoor main board may be defective.
Compressor phase detection error	U1	Replace outdoor main board

Diagnostic Codes
38/40GVC/Q 30k-36k, 230v

Malfunction	Error Code on indoor unit	Repair Method/Cause
Defrosting	H1	H1 signal normal operation
Anti–freeze Protection	E2	Outdoor ambient temperature is too low
IPM protection	H5	IPM module over temperature, low voltage, silica grease problem
Low voltage protection	E5	Check incoming power
System overload protection	H4	Checked for dirty or blocked heat exchangers
Discharge temperature sensor malfunction (out of range)	E4	Measure the resistance value in the sensor
Compressor overload protection	H3	Check overload wiring, compressor shell overheat, low charge
Compressor high voltage/power protection	L9	Compressor voltage too high, ambient temperature out of range
IPM protection	H5	IPM module over temperature, low voltage, silica grease problem
Indoor PCB Malfunction	EE	Replace main indoor board
DC input voltage is too low	PL	Check incoming power supply
DC input voltage is too high	PH	Check incoming power supply
PFC (power factor correction) board protection	HC	Refer to Service Manual
Indoor motor malfunction	H6	Check motor mounting and wiring
Indoor and outdoor units mismatched	LP	Check system combination
Condenser temperature sensor malfunction (open or shorted)	F4	Measure the resistance value in the sensor
Outdoor ambient temperature sensor malfunction	F3	Measure the resistance value in the sensor
Discharge temperature sensor malfunction (open or shorted)	F5	Measure the resistance value in the sensor
Return air temperature sensor malfunction	F1	Measure the resistance value in the sensor
Indoor pipe temperature sensor malfunction	F2	Measure the resistance value in the sensor
Communication malfunction	E6	Check wiring connection
Missing jumper from indoor board	C5	No jumper on controller or installed improperly or damaged. Corresponding circuit on main board has malfunction.
System high pressure protection	E1	Poor heat exchange. Are the coils clogged or blocked? Is the ambient temperature out of system range?

Copyright 2012 Carrier Corp. • 7310 W. Morris St. • Indianapolis, IN 46231

Manufacturer reserves the right to change, at any time, specifications and designs without notice and without obligations.