38AU
Air-Cooled Condensing Units
60 Hz
with Puron® (R-410A) Refrigerant
Sizes 16 – 25

Carrier®
Turn to the Experts.℠

Installation, Start-Up and Service Instructions

CONTENTS

SAFETY CONSIDERATIONS 1
INSTALLATION GUIDELINES 2
INSTALLATION 10-16
Step 1 – Plan for Unit Location 10
Step 2 – Complete Pre-Installation Checks 10
Step 3 – Prepare Unit Mounting Support 10
Step 4 – Rig and Mount the Unit 10
Step 5 – Complete Refrigerant Piping Connections . . 10
Step 6 – Install Accessories 12
Step 7 – Complete Electrical Connections 12
PRE-START-UP 17
System Check 17
Turn On Crankcase Heater 17
Preliminary Charge 17
START-UP . . . . . 17 -22
38AU Units 17
OPERATING SEQUENCE 23
Indoor (Supply) Fan 23
Cooling, Unit Without Economizer 23
Cooling, Unit With Economizer 23
Heating 23
ROUTINE SYSTEM MAINTENANCE 23
Quarterly Inspection (and 30 days after initial start) . . 23
Seasonal Maintenance 23
SERVICE . . . . . 24 - 28
Comfort Alert Diagnostic Module 24
Crankcase Heater 26
Compressor Protection 26
Low-Pressure Switches 26
High-Pressure Switches 26
Outdoor Fans 26
Lubrication 26
NOVATION™ Coil Cleaning and Maintenance 26
Repairing NOVATION Condenser Tube Leaks 27
Replacing NOVATION Condenser Coil 27
Routine Cleaning of Round-Tube Plate Fin (RTPF) Coils 27
Field Refrigerant Access Ports 28
Factory High-Flow Access Ports 28
Fastener Torque Values 28
TROUBLESHOOTING . . . . . 29 -30
APPENDIX 30
Air Conditioner and Heat Pump with Puron® – Quick Reference Guide 30
START-UP CHECKLIST CL-1, CL-2

SAFETY CONSIDERATIONS

Improper installation, adjustment, alteration, service, maintenance, or use can cause explosion, fire, electrical shock or other conditions which may cause personal injury or property damage. Consult a qualified installer, service agency, or your distributor or branch for information or assistance. The qualified installer or agency must use factory-authorized kits or accessories when modifying this product. Refer to the individual instructions package

Follow all safety codes. Wear safety glasses and work gloves. Use quenching cloths for brazing operations and have a fire extinguisher available. Read these instructions thoroughly and follow all warnings or cautions attached to the unit. Consult local building codes and appropriate national electrical codes (in USA, ANSI/NFPA70, National Electrical Code (NEC); in Canada, CSA C22.1) for special requirements.

It is important to recognize safety information. This is the safety-alert symbol ⚠. When you see this symbol on the unit and in instructions or manuals, be alert to the potential for personal injury.

Understand the signal words DANGER, WARNING, CAUTION, and NOTE. These words are used with the safety-alert symbol. DANGER identifies the most serious hazards which **will** result in severe personal injury or death. WARNING signifies hazards which **could** result in personal injury or death. CAUTION is used to identify unsafe practices, which **may** result in minor personal injury or product and property damage. NOTE is used to highlight suggestions which **will** result in enhanced installation, reliability, or operation.

⚠ WARNING

ELECTRICAL SHOCK HAZARD

Failure to follow this warning could result in personal injury or death.

Before performing service or maintenance operations on unit, always turn off main power switch to unit and install lockout tag. Unit may have more than one power switch.

⚠ WARNING

UNIT OPERATION AND SAFETY HAZARD

Failure to follow this warning could cause personal injury, death and/or equipment damage.

Puron® (R-410A) refrigerant systems operate at higher pressures than standard R-22 systems. Do not use R-22 service equipment or components on Puron refrigerant equipment.

⚠ WARNING

PERSONAL INJURY AND ENVIRONMENTAL HAZARD

Failure to follow this warning could cause personal injury or death.

Relieve pressure and recover all refrigerant before system repair or final unit disposal.

Wear safety glasses and gloves when handling refrigerants. Keep torches and other ignition sources away from refrigerants and oils.

⚠ CAUTION

CUT HAZARD

Failure to follow this caution may result in personal injury.

Sheet metal parts may have sharp edges or burrs. Use care and wear appropriate protective clothing, safety glasses and gloves when handling parts and servicing 38AU units.

INSTALLATION GUIDELINE

Replacement /Retrofit – R22 to Puron®

Replacement/retrofit installations require change-out of outdoor unit, metering device, and filter driers. Change-out of indoor coil (evaporator) and interconnecting tubing is recommended.

Existing evaporator coil – If the existing evaporator coil may be re-used, check with the coil manufacturer to verify the coil construction is suitable for operation with the higher pressures of Puron® (R-410A). Also determine if the existing TXV valve is compatible with R-410A, replace if necessary. The minimum factory test pressure rating must be 250 psig (1725 kPa). Existing coil will need to be purged with Nitrogen to remove as much mineral oil as possible to eliminate cross contamination of oils.

Acid test – If the existing system is being replaced because of a compressor electrical failure, assume acid is in system. If system is being replaced for any other reason, use an approved acid test kit to determine acid level. If even low levels of acid are detected, install a 100 percent activated alumina suction-line filter drier in addition to the replacement liquid-line filter drier. Remove the suction line filter drier as soon as possible, with a maximum of 72 hr of operation. Recommendation: Install a ball valve in the liquid line at the filter drier location when installing a suction filter in the suction line.

Installation –

1. Remove the existing evaporator coil or fan coil and install the replacement coil when appropriate.
2. Drain oil from low points and traps in suction line tubing (and hot gas bypass tubing if appropriate) and evaporator if they were not replaced. Removing oil from evaporator coil may require purging of the tubing with dry nitrogen.
3. Unless indoor unit is equipped with a Puron® approved metering device, change the metering device to a thermal expansion valve (TXV) designed for Puron® (R-410A).
4. Remove the existing outdoor unit. Install the new outdoor unit according to these installation instructions.
5. Install a new field-supplied liquid-line filter drier at the indoor coil just upstream of the TXV or fix orifice metering device.
6. If a suction line filter drier is also to be installed, install suction line drier downstream of suction line service valve at condensing unit.

⚠ CAUTION

UNIT DAMAGE HAZARD

Failure to follow this caution may result in equipment damage or improper operation.

Never install suction-line filter drier in the liquid-line of a Puron® system.

7. If required, install a 100% activated alumina suction line filter drier at the outdoor unit.
8. Evacuate and charge the system according to the instructions in this installation manual.
9. Operate the system for 10 hr. Monitor the pressure drop across the suction line filter drier. If pressure drop exceeds 3 psig (21kPa), replace suction-line and liquid-line filter driers. Be sure to purge system with dry nitrogen and evacuate when replacing filter driers. Continue to monitor the pressure drop across suction-line filter drier. Repeat filter changes is necessary. Never leave suction-line filter drier in system longer than 72 hr (actual time).

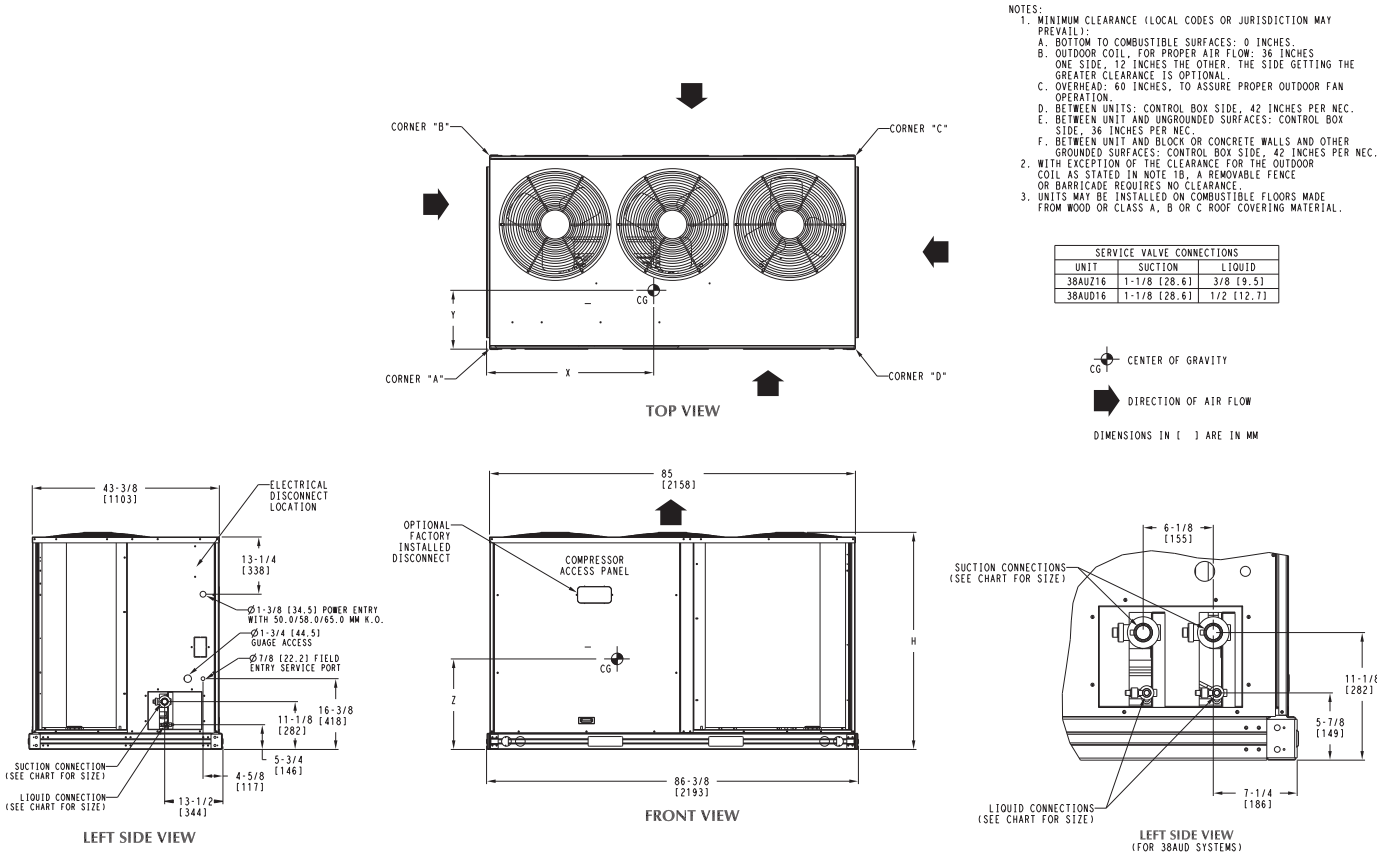

UNIT	Standard Weight		Corner A		Corner B		Corner C		Corner D		Center of Gravity			Unit Height
	lbs.	kg.	lbs.	kg.	lbs.	kg.	lbs.	kg.	lbs.	kg.	X	Y	Z	H
38AUZ*16	633	288	210	100	134	61	135	61.5	144	65.5	38.00 [965.2]	19.50 [495.3]	15.10 [383.3]	50.36 [1279.2]
38AUD*16	633	288	210	100	134	61	135	61.5	144	65.5	38.00 [965.2]	19.50 [495.3]	15.10 [383.3]	50.36 [1279.2]

Fig. 1 — 38AU16 Unit Dimensions**

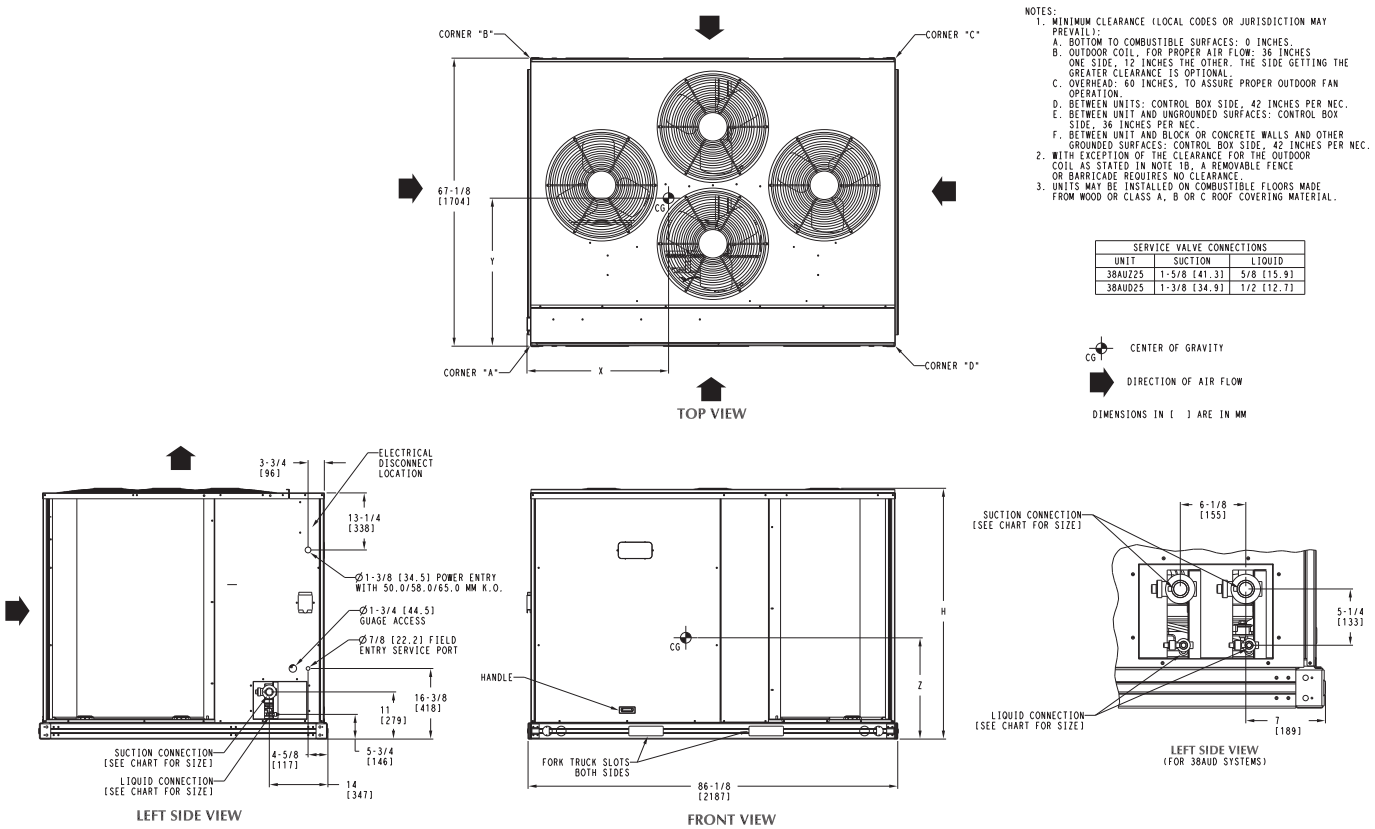

UNIT	Standard Weight		Corner A		Corner B		Corner C		Corner D		Center of Gravity			Unit Height
	lbs.	kg.	lbs.	kg.	lbs.	kg.	lbs.	kg.	lbs.	kg.	X	Y	Z	H
38AUZ*25	900	409	475	216	58	26.5	242	110	125	57	37.25 [946.1]	23.25 [590.5]	15.10 [383.3]	50.36 [1279.2]
38AUD*25	900	409	475	216	58	26.5	242	110	125	57	37.25 [946.1	23.25 [590.5	15.10 [383.3]	50.36 [1279.2]

Fig. 2 — 38AU25 Unit Dimensions**

Table 1A — Physical Data — 38AUZ*16-25 Units — 60 Hz English

UNIT SIZE 38AU	Z*16	Z*25
NOMINAL CAPACITY (tons)	15	20
OPERATING WEIGHTS (lb)		
Aluminum-Fin Coils	633	
Copper-Fin Coils		900
REFRIGERANT TYPE‡	R-410A	
Operating Charge, Typical (lb)†	24.5	38.0
Shipping Charge (lb)	12.0	38.0
COMPRESSOR	Scroll	
Qty...Model	2...ZP83	2...ZP103
Oil Charge (oz)	60	110
No. Cylinders	N/A	N/A
Speed (rpm)	3500	3500
CONDENSER FANS		
Qty...Rpm	3...1100	4...1100
Motor Hp	$^1/_4$	$^1/_4$
Diameter	22	22
Nominal Airflow (Cfm Total)	10,000	14,000
Watts (Total)	970	970
CONDENSER COIL (Qty)	1...NOVATION	1...RTPF
Face Area (sq ft total)	25.0 x 2	25.0 x 2
Rows/Fins per inch (FPI)	1/17	1/17
Storage Capacity (lb)**	13.5	42.4
CONTROLS		
Pressurestat Settings (psig)		
High Cutout	630 ± 10	
Cut-in	505 ± 20	
Low Cutout	54 ± 3	
Cut-in	117 ± 5	
PIPING CONNECTIONS (in. ODS)		
Qty...Suction	1...$1^3/_8$	1...$1^5/_8$
Qty...Liquid	1...$^5/_8$	1...$^5/_8$

LEGEND
ODS — Outside Diameter Sweat (socket)

‡ Unit is factory-supplied with partial charge only.
† Typical operating charge with 25 ft of interconnecting piping.
** Storage capacity of condenser coil with coil 80% full of liquid R-410A at 95°F.

Table 1B — Physical Data — 38AUZ*16-25 Units — 60 Hz SI

UNIT SIZE 38AU	Z*16	Z*25
NOMINAL CAPACITY (kW)	52.7	70.3
OPERATING WEIGHT (kg)		
Aluminum-Fin Coils	288	
Copper-Fin Coils		409
REFRIGERANT TYPE‡	R-410A	
Operating Charge, Typical (kg)†	11.1	17.2
Shipping Charge (kg)	5.4	17.2
COMPRESSOR	Scroll	
Qty...Model	2...ZP83	2...ZP103
Oil Charge (L)	1.7	3.2
No. Cylinders	N/A	N/A
Speed (r/s)	58	58
CONDENSER FANS		
Qty...r/s	3...18	4...18
Motor Hp NEMA	1/4	1/4
Diameter (mm)	560	560
Nominal Airflow (L/s)	4719	6607
Watts (Total)	970	970
CONDENSER COIL (Qty)	1...NOVATION	1...RTPF
Face Area (sq m total)	2.3 x 2	2.3 x 2
Rows/Fins per Meter (Fins/m)	1...670	1...670
Storage Capacity (kg)**	6.1	19.2
CONTROLS		
Pressurestat Settings (kPa)		
High Cutout	4347 ± 70	
Cut-in	3482 ±138	
Low Cutout	372 ± 21	
Cut-in	807 ± 34	
PIPING CONNECTIONS (in. ODS)		
Qty...Suction	1...1 3/8	1...1 5/8
Qty...Liquid	1...5/8	1...5/8

LEGEND
NEMA — National Electrical Manufacturers Association
ODS — Outside Diameter Sweat (socket)

‡ Unit is factory-supplied with partial charge only.
† Typical operating charge with 7.62 m of interconnecting piping.
** Storage capacity of condenser coil with coil 80% full of liquid R-410A at 35°C.

Table 2A — Physical Data — 38AUD*16-25 Units — 60 Hz English

UNIT SIZE 38AU	D*16	D*25
NOMINAL CAPACITY (tons)	15	20
OPERATING WEIGHTS (lb)		
Aluminum-Fin Coils	633	
Copper-Fin Coils		900
REFRIGERANT TYPE‡	R-410A	
Operating Charge A/B, Typical (lb)†	12.0/12.0	19.5/18.5
Shipping Charge A/B (lb)	6.0/6.0	19.5/18.5
COMPRESSOR	Scroll	
Qty...Model	2...ZP83	2...ZP103
Oil Charge (oz)	60	110
No. Cylinders	N/A	N/A
Speed (rpm)	3500	3500
CONDENSER FANS		
Qty...Rpm	3...1100	4...1100
Motor Hp	$^1/_4$	$^1/_4$
Diameter	22	22
Nominal Airflow (Cfm Total)	10,000	14,000
Watts (Total)	970	970
CONDENSER COIL (Qty)	1...NOVATION	1...RTPF
Face Area (sq ft total)	25.0 x 2	25.0 x 2
Rows/Fins per inch (FPI)	1/17	1/17
Storage Capacity A/B (lb)**	6.7/6.7	21.0/21.0
CONTROLS		
Pressurestat Settings (psig)		
High Cutout	630 ± 10	
Cut-in	505 ± 20	
Low Cutout	54 ± 3	
Cut-in	117 ± 5	
PIPING CONNECTIONS (in. ODS)		
Qty...Suction	2...$1^3/_8$	2...$1^3/_8$
Qty...Liquid	2...$^1/_2$	2...$^1/_2$

LEGEND
ODS — Outside Diameter Sweat (socket)

‡ Unit is factory-supplied with partial charge only.
† Typical operating charge with 25 ft of interconnecting piping.
** Storage capacity of condenser coil with coil 80% full of liquid R-410A at 95°F.

Table 2B — Physical Data — 38AUD*16-25 Units — 60 Hz SI

UNIT SIZE 38AU	D*16	D*25
NOMINAL CAPACITY (kW)	52.7	70.3
OPERATING WEIGHT (kg)		
Aluminum-Fin Coils	288	
Copper-Fin Coils		409
REFRIGERANT TYPE‡	R-410A	
Operating Charge A/B, Typical (kg)†	5.4/5.4	8.8/8.4
Shipping Charge A/B (kg)	2.7/2.7	8.8/8.4
COMPRESSOR	Scroll	
Qty...Model	2...ZP83	2...ZP103
Oil Charge (L)	1.7	3.2
No. Cylinders	N/A	N/A
Speed (r/s)	58	58
CONDENSER FANS		
Qty...r/s	3...18	4...18
Motor Hp NEMA	1/4	1/4
Diameter (mm)	560	560
Nominal Airflow (L/s)	4719	6607
Watts (Total)	970	970
CONDENSER COIL (Qty)	1...NOVATION	1...RTPF
Face Area (sq m total)	2.3 x 2	2.3 x 2
Rows/Fins per Meter (Fins/m)	1...670	1...670
Storage Capacity A/B (kg)**	3.0/3.0	9.5/9.5
CONTROLS		
Pressurestat Settings (kPa)		
High Cutout	4347 ± 70	
Cut-in	3482 ±138	
Low Cutout	372 ± 21	
Cut-in	807 ± 34	
PIPING CONNECTIONS (in. ODS)		
Qty...Suction	2...1 3/8	2...1 3/8
Qty...Liquid	2...1/2	2...1/2

LEGEND
NEMA — National Electrical Manufacturers Association
ODS — Outside Diameter Sweat (socket)

‡ Unit is factory-supplied with partial charge only.
† Typical operating charge with 7.62 m of interconnecting piping.
** Storage capacity of condenser coil with coil 80% full of liquid R-410A at 35°C.

1	2	3	4	5	6	7	8	9	10	11	12	13	14	15	16	17	18
3	8	A	U	Z	A	2	5	A	0	G	6	–	0	A	0	A	0

Model Type
38AU= Carrier Condensing Unit
Puron® R–410A Refrigerant

Type of Coil
Z = Single Circuit, A/C Scroll Compressor
D = Dual Circuit, A/C Scroll Compressor

Refrigerant Options
A = None
B = Low Ambient

Nominal Tonnage
16 = 15 Tons
25 = 20 Tons

Not Used
A = Not Used

Not Used
0 = Not Used

Packaging
0 = Standard
1 = LTL

Electrical Options
A = None
C = Non-Fused Disconnect

Service Options
0 = None
1 = Un-powered Convenience Outlet
2 = Powered Convenience Outlet

Not Used
A = Place Holder

Base Unit Controls
0 = Electro-Mechanical Controls

Design Rev
– = Catalog Model Number

Voltage
1 = 575/3/60
5 = 208/230/3/60
6 = 460/3/60

Coil Options
G= Al/Al
K = E-Coat Al/Al
T = Al/Al with Hail Guard
W= E-Coat Al/Al with Hail Guard

Fig. 3 — Model Number Nomenclature

POSITION NUMBER	1	2	3	4	5	6	7	8	9	10
TYPICAL	4	8	0	8	G	1	2	3	4	5

POSITION	DESIGNATES
1–2	Week of manufacture (fiscal calendar)
3–4	Year of manufacture (”08” = 2008)
5	Manufacturing location (G = ETP, Texas, USA)
6–10	Sequential number

Fig. 4 — Serial Number Nomenclature

INSTALLATION

Jobsite Survey

Complete the following checks before installation.

1. Consult local building codes and the NEC (National Electrical Code) ANSI/NFPA 70 for special installation requirements.
2. Determine unit location (from project plans) or select unit location.
3. Check for possible overhead obstructions which may interfere with unit lifting or rigging.

Step 1 — Plan for Unit Location

Select a location for the unit and its support system (pad, rails or other) that provides for the minimum clearances required for safety. This includes the clearance to combustible surfaces, unit performance and service access below, around and above unit as specified in unit drawings. See Fig. 5.

NOTE: Consider also the effect of adjacent units on airflow performance and control box safety clearance.

Do not install the outdoor unit in an area where fresh air supply to the outdoor coil may be restricted or when recirculation from the condenser fan discharge is possible. Do not locate the unit in a well or next to high walls.

Evaluate the path and required line length for interconnecting refrigeration piping, including suction riser requirements (outdoor unit above indoor unit), liquid line lift (outdoor unit below indoor unit) and hot gas bypass line. Relocate sections to minimize the length of interconnecting tubing.

DO NOT BURY REFRIGERATION LINES.

Although unit is weatherproof, avoid locations that permit water from higher level runoff and overhangs to fall onto the unit.

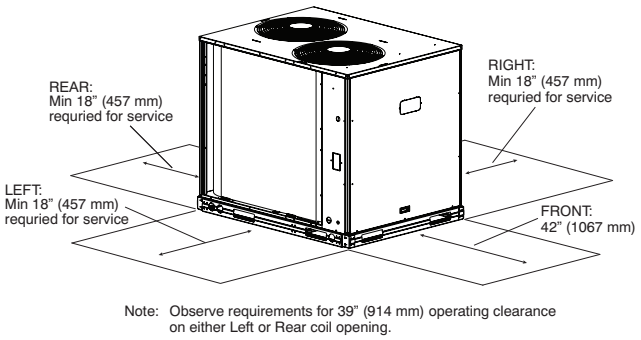

Fig. 5 — Service Clearance Dimensional Drawing

Step 2 — Complete Pre-Installation Checks

CHECK UNIT ELECTRICAL CHARACTERISTIC — Confirm before installation of unit that voltage, amperage and circuit protection requirements listed on unit data plate agree with power supply provided.

UNCRATE UNIT — Remove unit packaging except for the top skid assembly, which should be left in place until after the unit is rigged into its final location.

INSPECT SHIPMENT — File a claim with shipping company if the shipment is damaged or incomplete.

CONSIDER SYSTEM REQUIREMENTS

- Consult local building codes and National Electrical Code (NEC, U.S.A.) for special installation requirements.
- Allow sufficient space for airflow clearance, wiring, refrigerant piping, and servicing unit. See Fig.1 and Fig. 2 for unit dimensions and weight distribution data.
- Locate the unit so that the outdoor coil (condenser) airflow is unrestricted on all sides and above.
- The unit may be mounted on a level pad directly on the base channels or mounted on raised pads at support points. See Tables 1A through 2B for unit operating weights. See Fig. 1 and Fig. 2 for weight distribution based on recommended support points.

  NOTE: If vibration isolators are required for a particular installation, use the data in Fig. 1 and Fig. 2 to make the proper selection.

Step 3 — Prepare Unit Mounting Support

Slab Mount —

Provide a level concrete slab that extends a minimum of 6 in. (150 mm) beyond unit cabinet. Install a gravel apron in front of condenser coil air inlet to prevent grass and foliage from obstructing airflow.

Step 4 — Rig and Mount the Unit

⚠ CAUTION

UNIT DAMAGE HAZARD

Failure to follow this caution may result in equipment damage.

All panels must be in place when rigging. Unit is not designed for handling by fork truck.

RIGGING — These units are designed for overhead rigging. Refer to the rigging label for preferred rigging method. Spreader bars are not required if top crating is left on the unit. All panels must be in place when rigging. As further protection for coil faces, plywood sheets may be placed against the sides of the unit, behind cables. Run cables to a central suspension point so that the angle from the horizontal is not less than 45 degrees. Raise and set the unit down carefully.

If it is necessary to roll the unit into position, mount the unit on longitudinal rails, using a minimum of 3 rollers. Apply force to the rails, not the unit. If the unit is to be skidded into position, place it on a large pad and drag it by the pad. Do not apply any force to the unit.

Raise from above to lift the unit from the rails or pad when unit is in its final position.

After the unit is in position, remove all shipping materials and top crating.

Step 5 — Complete Refrigerant Piping Connections

IMPORTANT: Do not bury refrigerant piping underground.

IMPORTANT: A refrigerant receiver is not provided with the unit. Do not install a receiver.

PROVIDE SAFETY RELIEF — The 38AU unit is provided with a fusible joint in the suction line in accordance with applicable UL standards for pressure relief. If local codes dictate an additional safety relief device, purchase locally and install locally. Installation will require the recovery of the factory shipping charge before the factory tubing can be cut and the supplemental relief device is installed.

SIZE REFRIGERANT LINES — Consider the linear length of piping required between the outdoor unit and indoor unit (evaporator), the amount of liquid lift (indoor section installed above the outdoor section), and compressor oil return. Consider and identify also the arrangement of the tubing path (quantity and type of elbows in both lines), liquid line solenoid size, filter drier and any other refrigeration specialties located

in the liquid line. Refer to the indoor unit installation instructions for additional details.

Determine equivalent line length adjustments for path and components and add to linear line lengths. See Tables 3 and 4; also refer to Part 3 of the Carrier System Design Manual and E20-II® software for design details and line sizing.

Table 3 — Liquid Line Data — 38AU16-25 60 Hz Units,**

MAXIMUM ALLOWABLE LIQUID LIFT ft (m)	LIQUID LINE	
	Maximum Allowable Pressure Drop psig (kPa)	Maximum Allowable Temp. Loss °F (°C)
60 (18)	7 (48)	2 (1)

NOTE: Data shown is for units operating at 45°F (7.2°C) saturated suction temperature and 95°F (35°C) entering air temperature. For 38AU**16-25 applications with liquid lift greater than 20 ft (6 m), use 5/8-in. liquid line. Maximum lift is 60 ft (18 m).

Table 4 — Refrigerant Piping Sizes — 38AU16-25 60 Hz Units**

UNIT 38AU	LINEAR LENGTH OF INTERCONNECTING PIPING — FT (m)							
	0-25 (0-7.5)		25-50 (7.5-15)		50-75 (15-23)		75-100 (23-30)‡	
	Line Size (in. OD)							
	L	S	L	S	L	S	L	S
Z*16	5/8	1 3/8	5/8	1 3/8	5/8	1 3/8	5/8	1 3/8
Z*25	5/8	1 5/8	5/8	1 5/8	3/4	1 5/8	3/4	1 5/8
D*16	(2) 1/2	(2) 1 3/8	(2) 1/2	(2) 1 3/8	(2) 1/2	(2) 1 3/8	(2) 5/8	(2) 1 3/8
D*25	(2) 1/2	(2) 1 3/8	(2) 1/2	(2) 1 3/8	(2) 5/8	(2) 1 3/8	(2) 5/8	(2) 1 3/8

LEGEND
L — Liquid Line **S —** Suction Line

‡Field-supplied suction accumulator required for pipe length 75-100 ft (23-30 m).

NOTES:
1. Pipe sizes are based on a 2°F (1°C) saturated temperature loss for liquid and suction lines.
2. Pipe sizes are based on the maximum linear length, shown for each column, plus a 50% allowance for fittings.
3. Charge unit with R-410A and verify that subcooled liquid exists at TXV by checking for a full liquid line sight glass or by calculating subcooling at TXV.

Suction line sizing – Select a tube size that produces a suction pressure drop in range of 1.5 to 3.0°F (0.8 to 1.7°C). (Higher pressure drops are permissible but there will be a loss in cooling capacity due to the higher pressure drop.) Insulate the suction line.

Liquid line sizing – For linear line lengths up to 50-ft (15 m), select a tube size that produces a liquid pressure drop of approximately 2°F (1.1°C). For linear line lengths greater than 50-ft (15 m), select a line size that will permit the liquid state-point subcooling entering the indoor coil's TXV to be a minimum of 2°F (1.1°C).

Hot Gas Bypass – Hot gas bypass, if used, should be introduced before the evaporator. (A bypass route that also bypasses the evaporator circuit may lead to oil trapping in the evaporator circuit during low load conditions and then to oil slugging as evaporator load increases.) Model 38AU units do not include a hot gas stub connection; a tee must be field-supplied and installed in the compressor discharge line. Run a ½-in OD line between outdoor unit and evaporator coil inlet. Install an Auxiliary Side Connector at the evaporator between TXV and distributor (follow instructions for the side connector part). Insulate the hot gas line.

Note that refrigerant suction piping should be insulated.

INSTALL FILTER DRIER(S) AND MOISTURE INDICATOR(S) — Every unit should have a filter drier and a liquid-moisture indicator (sight glass). Refer to Table 5. In some applications, depending on space and convenience requirements, it may be desirable to install 2 filter driers and sight glasses. One filter drier and sight glass may be installed at A locations in Fig. 6; or, 2 filter driers and sight glasses may be installed at B locations.

Select the filter drier for maximum unit capacity and minimum pressure drop. Complete the refrigerant piping from the indoor unit to the outdoor unit before opening the liquid and suction lines at the outdoor unit.

INSTALL LIQUID LINE SOLENOID VALVE — SOLENOID DROP — It is recommended that a solenoid valve be placed in the main liquid line (see Fig. 6) between the condensing unit and the evaporator coil. Refer to Table 5. (A liquid line solenoid valve is required when the liquid line length exceeds 75 ft [23 m] or when the condensing unit is connected to a chiller barrel in a built-up chiller system.) This valve prevents refrigerant migration (which causes oil dilution) to the compressor during the off cycle, at low outdoor ambient temperatures. Wire the solenoid in parallel with the compressor contactor coil (see Fig. 6). This means of electrical control is referred to as solenoid *drop* control.

INSTALL LIQUID LINE SOLENOID VALVE (Optional) — CAPACITY CONTROL — If 2-step cooling is desired, place a solenoid valve in the location shown in Fig. 6.

MAKE PIPING CONNECTIONS — Piping connections at the 38AU unit are ball valves with stub tube extensions. Do not open the unit service valves until all interconnecting tube brazing as been completed.

The stub tube connections include ¼-in SAE service fittings with Schrader valve cores (see Fig. 7). Before making any brazed connections to the unit service valves, remove both Schrader valve caps and cores and save for re-installation. Connect a source for nitrogen to one of these service fittings during tube brazing to prevent the formation of copper oxides inside the tubes at brazed joints.

When connecting the field tubing to the 38AU service valves, wrap the valves in wet rags to prevent overheating

Pressure-test all joints from outdoor unit connections over to the evaporator coil, using nitrogen as pressure and with soap-and-bubbles.

When pressure-testing is completed, remove the nitrogen source at the outdoor unit service valves and re-install the two Schrader valve cores. Torque the cores to 2-3 in-lbs (23-34 N-cm).

Table 5 — Refrigerant Specialities Part Numbers.

UNIT	LIQUID LINE SIZE (in.)	LIQUID LINE SOLENOID VALVE (LLSV)	LLSV COIL	SIGHT GLASS	FILTER DRIER	SUCTION LINE ACCUMULATOR
38AUZ*16	5/8	ALC-066212	AMG-24/50-60	HMI-1TT5	EK305S	S-7721‡
38AUZ*25	5/8	ALC-066212	AMG-24/50-60	HMI-1TT5	EK305S	S-7721‡
38AUD*16	1/2	ALC-066211 (Qty 2)	AMG-24/50-60	HMI-1TT4 (Qty 2)	EK164S (Qty 2)	S-7063S (Qty 2)
38AUD*25	1/2	ALC-066211 (Qty 2)	AMG-24/50-60	HMI-1TT4 (Qty 2)	EK304S (Qty 2)	S-7063S (Qty 2)

‡Bushings required.

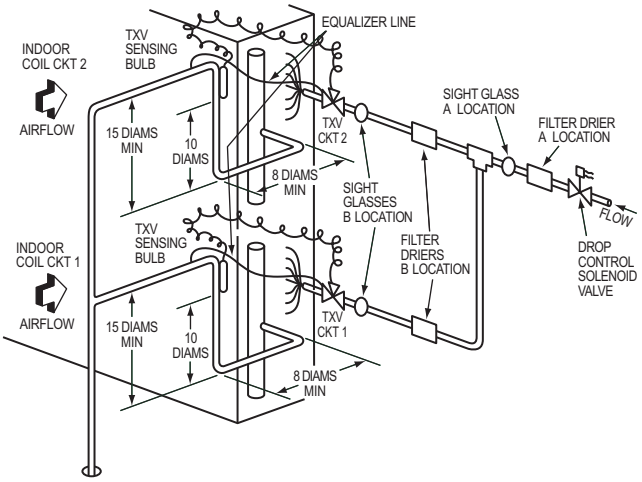

Dual Circuit Coil Piping Configuration - AUZ16, 25
For single compressor condensing units

LEGEND

TXV — Thermostatic Expansion Valve

Fig. 6 — Location of Sight Glass(es) and Filter Driers

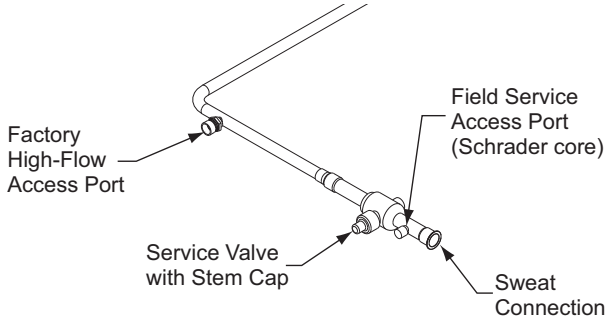

Fig. 7 — Typical Piping Connection Assembly

EVACUATION/DEHYDRATION — Evacuate and dehydrate the connected refrigeration system (excluding the 38AU unit) to 500 microns using a two-stage vacuum pump attached to the service ports outside the 38AU service valves, following description in GTAC II, Module 4, System Dehydration.

⚠ WARNING

UNIT OPERATION AND SAFETY HAZARD

Failure to follow this warning could cause personal injury, death and/or equipment damage.

Puron® (R-410A) refrigerant systems operate at higher pressures than standard R-22 systems. Do not use R-22 service equipment or components on Puron refrigerant equipment.

PRELIMINARY CHARGE — Before starting the unit, charge R-410A liquid refrigerant into the high side of the system through the liquid service valve. The amount of refrigerant added must be at least 80% of the operating charge listed in the Physical Data table (Tables 1A through 2B, pages 5 through 8) LESS the factory charge quantity (if factory shipping charge has not been removed). Allow high and low side pressures to equalize. If pressures do not equalize readily, charge R-410A vapor (using special service manifold with expansion device) into the suction line service port for the low side of system to assure charge in the evaporator. Refer to GTAC II, Module 5, Charging, Recover, Recycling, and Reclamation for liquid charging procedures.

Step 6 — Install Accessories

Accessories requiring modifications to unit wiring should be completed now. These accessories may include Winter Start controls, Low Ambient controls, phase monitor, Compressor LOCout. Refer to the instructions shipped with the accessory.

Step 7 — Complete Electrical Connections

⚠ WARNING

ELECTRICAL SHOCK HAZARD

Failure to follow this warning could result in personal injury or death.

Do not use gas piping as an electrical ground. Unit cabinet must have an uninterrupted, unbroken electrical ground to minimize the possibility of personal injury if an electrical fault should occur. This ground may consist of electrical wire connected to unit ground lug in control compartment, or conduit approved for electrical ground when installed in accordance with NEC (National Electrical Code); ANSI/NFPA 70, latest edition (in Canada, Canadian Electrical Code CSA [Canadian Standards Association] C22.1), and local electrical codes.

NOTE: Check all factory and field electrical connections for tightness. Field-supplied wiring shall conform with the limitations of 63°F (33°C) rise.

Field Power Supply —

If equipped with optional Powered Convenience Outlet: The power source leads to the convenience outlet's transformer primary are not factory connected. Installer must connect these leads according to required operation of the convenience outlet. If an always-energized convenience outlet operation is desired, connect the source leads to the line side of the unit-mounted disconnect. (Check with local codes to ensure this method is acceptable in your area.) If a de-energize via unit disconnect switch operation of the convenience outlet is desired, connect the source leads to the load side of the unit disconnect. On a unit without a unit-mounted disconnect, connect the source leads to the factory connection leads (pigtails) in the unit's main control box (see Fig. 9).

All units except 208/230-v units are factory wired for the voltage shown on the nameplate. *If the 208/230-v unit is to be connected to a 208-v power supply, the control transformer must be rewired by moving the black wire with the ¼-in. female spade connector from the 230-v connection and moving it to the 208-v ¼-in. male terminal on the primary side of the transformer.* Refer to unit label diagram for to line-side information. Field power wires will be connected line-side pressure lugs on the power terminal block or at factory-installed option non-fused disconnect.

Field power wires are connected to the unit at the leads to the factory connection leads (pigtails) in the unit's main control box (see Fig. 9) or at factory-installed option non-fused disconnect switch. Max wire size is #4 AWG (copper only).

NOTE: TEST LEADS - Unit may be equipped with short leads (pigtails) on the field line connection points on the optional disconnect switch. These leads are for factory run-test purposes only; remove and discard before connecting field power wires to unit connection points.

⚠ WARNING

FIRE HAZARD

Failure to follow this warning could cause personal injury, death and/or equipment damage.

Do not connect aluminum wire between disconnect switch and condensing unit. Use only copper wire.

(See Fig. 8.)

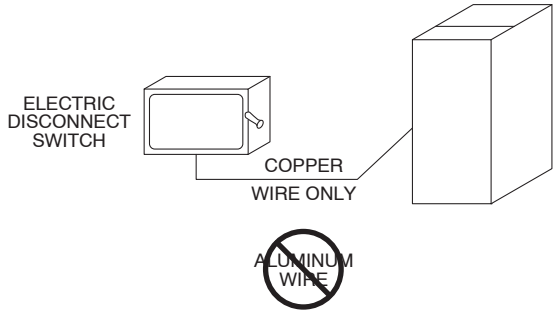

Fig. 8 — Disconnect Switch and Unit

Units Without Factory-Installed Disconnect —

When installing units, provide a disconnect switch per NEC (National Electrical Code) of adequate size. Disconnect sizing data is provided on the unit informative plate. Locate on unit cabinet or within sight of the unit per national or local codes. Do not cover unit informative plate if mounting the disconnect on the unit cabinet.

Units with Factory-Installed Disconnect —

The factory-installed option disconnect switch is located in a weatherproof enclosure located under the main control box. The manual switch handle is accessible through an opening in the access panel.

All units -

All field wiring must comply with NEC and all local codes. Size wire based on MCA (Minimum Circuit Amps) on the unit informative plate. See Fig. 9 for power wiring connections to the unit power terminal block and equipment ground.

Provide a ground-fault and short-circuit over-current protection device (fuse or breaker) per NEC Article 440 (or local codes). Refer to unit informative data plate for MOCP (Maximum Over-current Protection) device size.

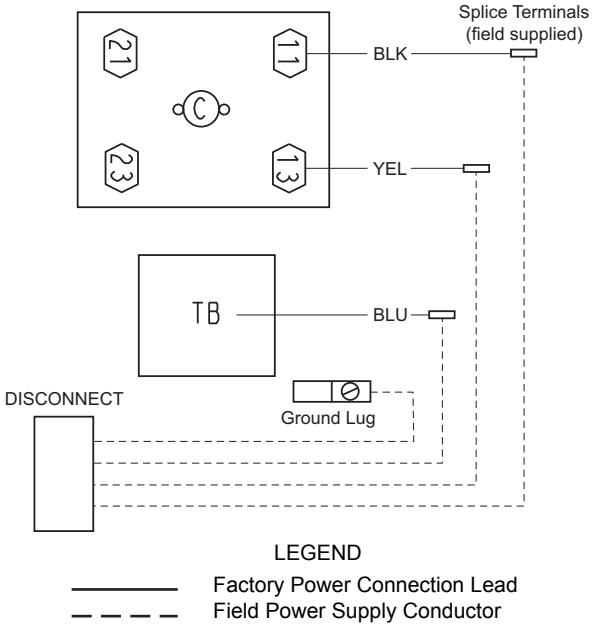

Fig. 9 — Power Wiring Connections

All field wiring must comply with the NEC and local requirements.

Affix the crankcase heater warning sticker to the unit disconnect switch.

Convenience Outlets —

⚠ WARNING

ELECTRICAL OPERATION HAZARD

Failure to follow this warning could result in personal injury or death.

Units with convenience outlet circuits may use multiple disconnects. Check convenience outlet for power status before opening unit for service. Locate its disconnect switch, if appropriate, and open it. Tag-out this switch, if necessary.

Two types of convenience outlets are offered on 38AU models: Non-powered and unit-powered. Both types provide a 125-volt GFCI (ground-fault circuit-interrupter) duplex receptacle rated at 15-A behind a hinged waterproof access cover, located on the end panel of the unit. See Fig. 10.

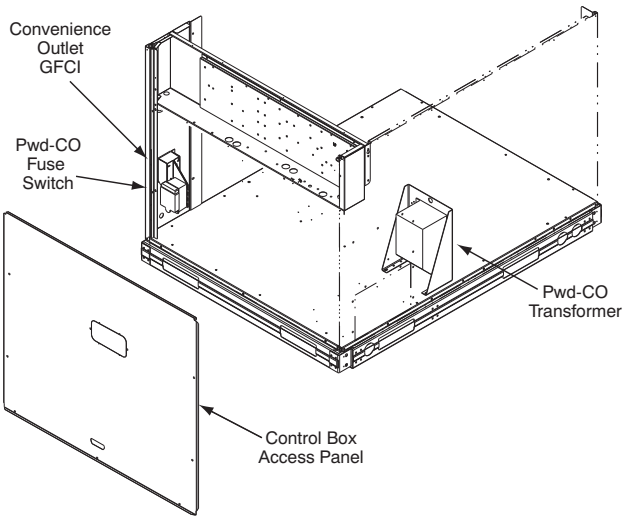

Fig. 10 — Convenience Outlet Location

Non-powered type: This type requires the field installation of a general-purpose 125-volt 15-A circuit powered from a source elsewhere in the building. Observe national and local codes when selecting wire size, fuse or breaker requirements and disconnect switch size and location. Route 125-v power supply conductors into the bottom of the utility box containing the duplex receptacle.

Unit-powered type: A unit-mounted transformer is factory-installed to stepdown the main power supply voltage to the unit to 115-v at the duplex receptacle. This option also includes a manual switch with fuse, located in a utility box and mounted on a bracket behind the convenience outlet; access is through the unit's control box access panel. See Fig. 10.

The primary leads to the convenience outlet transformer are not factory-connected. Selection of primary power source is a customer-option. If local codes permit, the transformer primary leads can be connected at the line-side terminals on the unit-mounted non-fused disconnect or HACR breaker switch; this will provide service power to the unit when the unit disconnect switch or HACR switch is open. Other connection methods will result in the convenience outlet circuit being de-energized when the unit disconnect or HACR switch is open. See Fig. 11.

Duty Cycle: the unit-powered convenience outlet has a duty cycle limitation. The transformer is intended to provide power on an intermittent basis for service tools, lamps, etc; it is not intended to provide 15-amps loading for continuous duty loads (such as electric heaters for overnight use). Observe a 50% limit on circuit loading above 8-amps (i.e., limit loads exceeding 8-amps to 30 minutes of operation every hour).

Test the GFCI receptacle by pressing the TEST button on the face of the receptacle to trip and open the receptacle. Check for proper grounding wires and power line phasing if the GFCI receptacle does not trip as required. Press the RESET button to clear the tripped condition.

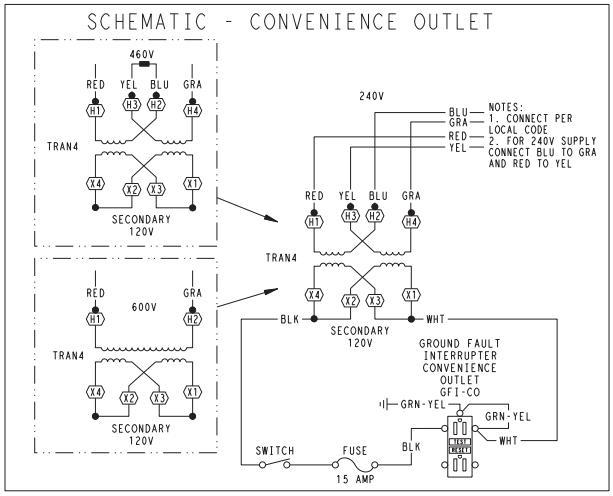

UNIT VOLTAGE	CONNECT AS	PRIMARY CONNECTIONS	TRANSFORMER TERMINALS
208, 230	240	L1: RED + YEL L2: BLU + GRA	H1 + H3 H2 + H4
460	480	L1: RED Splice BLU + YEL L2: GRA	H1 H2 + H3 H4
575	600	L1: RED L2: GRA	H1 H2

Fig. 11 - Powered Convenience Outlet Wiring

Fuse on power type: The factory fuse is a Bussman "Fusetron" T-15, non-renewable screw-in (Edison base) type plug fuse.

Using unit-mounted convenience outlets: Units with unit-mounded convenience outlet circuits will often require that two disconnects be opened to de-energize all power to the unit. Treat all units as electrically energized until the convenience outlet power is also checked and de-energization is confirmed. Observe National Electrical Code Article 210, Branch Circuits, for use of convenience outlets.

Installing Weatherproof Cover –

A weatherproof while-in-use cover for the factory-installed convenience outlets is now required by UL standards. This cover cannot be factory-mounted due its depth; it must be installed at unit installation. For shipment, the convenience outlet is covered with a blank cover plate.

The weatherproof cover kit is shipped in the unit's control box. The kit includes the hinged cover, a backing plate and gasket.

DISCONNECT ALL POWER TO UNIT AND CONVENIENCE OUTLET.

Remove the blank cover plate at the convenience outlet; discard the blank cover.

Loosen the two screws at the GFCI duplex outlet, until approximately $^1/_2$-in (13 mm) under screw heads are exposed. Press the gasket over the screw heads. Slip the backing plate over the screw heads at the keyhole slots and align with the gasket; tighten the two screws until snug (do not over-tighten).

Mount the weatherproof cover to the backing plate as shown in Fig. 12. Remove two slot fillers in the bottom of the cover to permit service tool cords to exit the cover. Check for full closing and latching.

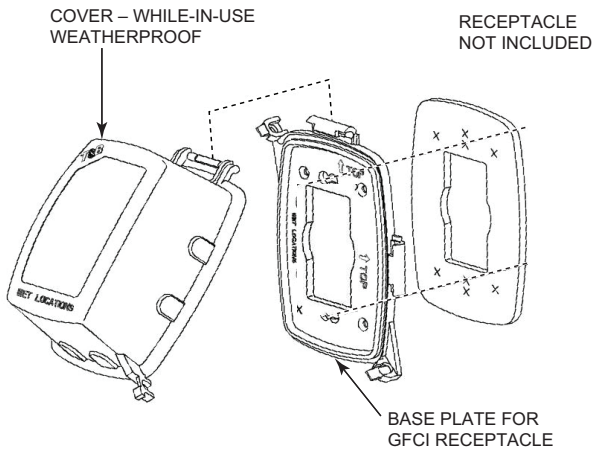

Fig. 12 — Weatherproof Cover Installation

All Units —

Voltage to compressor terminals during operation must be within voltage range indicated on unit nameplate. See Tables 6 and 7. On 3-phase units, voltages between phases must be balanced within 2% and the current within 10%. Use the formula shown in the legend for Tables 6 and 7, Note 5 (see page 16) to determine the percent of voltage imbalance. Operation on improper line voltage or excessive phase imbalance constitutes abuse and may cause damage to electrical components. Such operation would invalidate any applicable Carrier warranty.

Field Control Wiring — Unit control voltage is 24 v. See Fig. 9 and the unit's label diagram for field-supplied wiring details. Route control wires through the opening in unit's end panel to the connections terminal board in the unit's control box.

The 38AU unit requires an external temperature control device. This device can be a thermostat (field-supplied) or a PremierLink controller (available as factory-installed option or as field-installed accessory, for use on a Carrier Comfort Network or as a stand alone control).

Thermostat —

Install a Carrier-approved accessory thermostat according to installation instructions included with the accessory. For complete economizer function, select a two—stage cooling thermostat. Locate the thermostat accessory on a solid wall in the conditioned space to sense average temperature in accordance with the thermostat installation instructions.

If the thermostat contains a logic circuit requiring 24-v power, use a thermostat cable or equivalent single leads of different colors with minimum of four leads. If the thermostat does not require a 24-v source (no "C" connection required), use a thermostat cable or equivalent with minimum of three leads. Check the thermostat installation instructions for additional features which might require additional conductors in the cable.

For wire runs up to 50 ft. (15 m), use no. 18 AWG (American Wire Gage) insulated wire (35°C minimum). For 50 to 75 ft. (15 to 23 m), use no. 16 AWG insulated wire (35°C minimum). For over 75 ft. (23 m), use no. 14 AWG insulated wire (35°C minimum). All wire sizes larger than no. 18 AWG cannot be directly connected to the thermostat and will require a junction box and splice at the thermostat.

PremierLink (accessory installation) – Refer to Form 33CS-58SI for details on connecting the PremierLink controller and its various sensors.

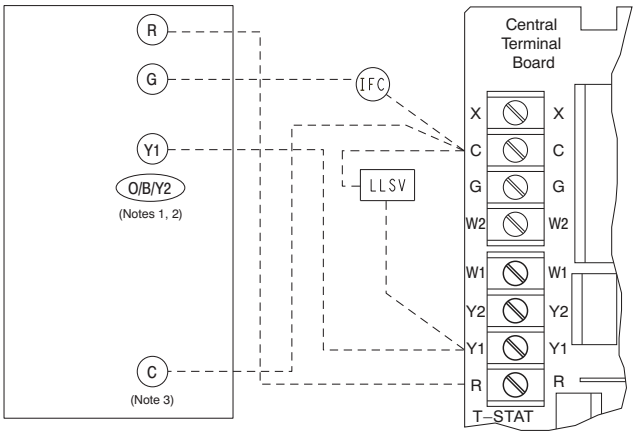

Note 1: Typical multi-function marking. Follow manufacturer's configuration instructions to select Y2.
Note 2: Y2 to economizer required on single-stage cooling units when integrated economizer function is desired
Note 3: Connect only if thermostat requires 24-vac power source.
– – – Field Wiring

Fig. 13 — Typical Remote Thermostat Connections

CONTROL CIRCUIT WIRING — Control voltage is 24 v. See Fig. 9 and the unit's label diagram for field-supplied wiring details. Route control wires through the opening in unit's end panel to the connection in the unit's control box.

CONTROL TRANSFORMER WIRING (38AU Units) —

On multivoltage units, check the transformer primary wiring connections. See Fig. 14 or refer to the unit's label diagram.

If the unit will be operating at 208-3-60 power, remove the black wire (BLK) from the transformer primary connection labelled "230" and move it to the connection labelled "208". See Fig. 14.

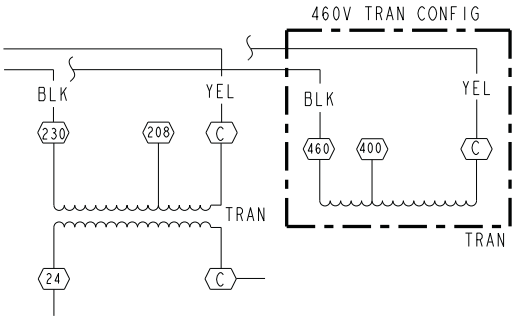

Fig. 14 — Control Transformer Wiring

Table 6 — Electrical Data — 38AUZ*16-25 60 Hz Units

UNIT SIZE 38AU	FACTORY-INSTALLED OPTION	NOMINAL VOLTAGE	VOLTAGE RANGE‡		COMPRESSOR		FAN MOTORS			POWER SUPPLY	
		V-Ph-Hz	MIN	MAX	RLA	LRA	FLA (ea)	LRA (ea)	QTY	MCA	MOCP
Z*16	NONE OR DISCONNECT	208/230-3-60	187	253	25	164	1.5	3.0	3	60.7	80
	CONVENIENCE OUTLET									65.5	90
	NONE OR DISCONNECT	460-3-60	414	506	12.2	100	0.8	1.6	3	29.8	40
	CONVENIENCE OUTLET									34.6	45
	NONE OR DISCONNECT	575-3-60	518	633	9	78	0.6	1.6	3	22.0	30
	CONVENIENCE OUTLET									26.8	35
Z*25	NONE OR DISCONNECT	208/230-3-60	187	253	30.1	225	1.5	3.0	4	73.7	100
	CONVENIENCE OUTLET									78.5	100
	NONE OR DISCONNECT	460-3-60	414	506	16.7	114	0.8	1.6	4	40.8	50
	CONVENIENCE OUTLET									45.6	60
	NONE OR DISCONNECT	575-3-60	518	633	12.2	80	0.6	1.6	4	29.8	40
	CONVENIENCE OUTLET									34.6	45

Table 7 — Electrical Data — 38AUD*16-25 60 Hz Units

UNIT SIZE 38AU	FACTORY-INSTALLED OPTION	NOMINAL VOLTAGE	VOLTAGE RANGE‡		COMPRESSOR 1		COMPRESSOR 2		FAN MOTORS			POWER SUPPLY	
		V-Ph-Hz	MIN	MAX	RLA	LRA	RLA	LRA	FLA (ea)	LRA (ea)	QTY	MCA	MOCP
D*16	NONE OR DISCONNECT	208/230-3-60	187	253	25	164	25	164	1.5	3.0	3	60.7	80
	CONVENIENCE OUTLET											65.5	90
	NONE OR DISCONNECT	460-3-60	414	506	12.2	100	12.2	100	0.8	1.6	3	29.8	40
	CONVENIENCE OUTLET											34.6	45
	NONE OR DISCONNECT	575-3-60	518	633	9	78	9	78	0.6	1.6	3	22.0	30
	CONVENIENCE OUTLET											26.8	35
D*25	NONE OR DISCONNECT	208/230-3-60	187	253	30.1	225	30.1	225	1.5	3.0	4	73.7	100
	CONVENIENCE OUTLET											78.5	100
	NONE OR DISCONNECT	460-3-60	414	506	16.7	114	16.7	114	0.8	1.6	4	40.8	50
	CONVENIENCE OUTLET											45.6	60
	NONE OR DISCONNECT	575-3-60	518	633	12.2	80	12.2	80	0.6	1.6	4	29.8	40
	CONVENIENCE OUTLET											34.6	45

LEGEND and NOTES for TABLES 6 & 7

FLA — Full Load Amps

LRA — Locked Rotor Amps

MCA — Minimum Circuit Amps

MOCP — Maximum Overcurrent Protection

NEC — National Electrical Code

RLA — Rated Load Amps

‡Units are suitable for use on electrical systems where voltage supplied to the unit terminals is not below or above the listed limits.

NOTES:
1. The MCA and MOCP values are calculated in accordance with the NEC, Article 440.
2. Motor RLA and LRA values are established in accordance with Underwriters' Laboratories (UL), Standard 1995.
3. The 575-v units are UL, Canada-listed only.
4. Convenience outlet is available as a factory-installed option and is 115-v, 1 ph, 60 Hz.
5. **Unbalanced 3-Phase Supply Voltage**
   Never operate a motor where a phase imbalance in supply voltage is greater than 2%. Use the following formula to determine the percentage of voltage imbalance.

$$\text{\% Voltage Imbalance} = 100 \times \frac{\text{max voltage deviation from average voltage}}{\text{average voltage}}$$

Example: Supply voltage is 230-3-60

AB = 224 v
BC = 231 v
AC = 226 v

$$\text{Average Voltage} = \frac{(224 + 231 + 226)}{3} = \frac{681}{3} = 227$$

Determine maximum deviation from average voltage.
(AB) 227 – 224 = 3 v
(BC) 231 – 227 = 4 v
(AC) 227 – 226 = 1 v
Maximum deviation is 4 v.
Determine percent of voltage imbalance.

$$\text{\% Voltage Imbalance} = 100 \times \frac{4}{227} = 1.76\%$$

This amount of phase imbalance is satisfactory as it is below the maximum allowable 2%.

IMPORTANT: If the supply voltage phase imbalance is more than 2%, contact your local electric utility company immediately.

PRE-START-UP

IMPORTANT: Before beginning Pre-Start-Up or Start-Up, review Start-Up Checklist at the back of this book. The Checklist assures proper start-up of a unit and provides a record of unit condition, application requirements, system information, and operation at initial start-up.

⚠ CAUTION

UNIT DAMAGE HAZARD

Failure to follow this caution may result in equipment damage.

Do not attempt to start the condensing unit, even momentarily, until the following steps have been completed. Compressor damage may result.

System Check

1. Check all air handler(s) and other equipment auxiliary components. Consult the manufacturer's instructions regarding any other equipment connected to the condensing unit. If the unit has field-installed accessories, be sure all are properly installed and correctly wired. If used, the airflow switch must be properly installed.
2. Be sure the unit is properly leak checked and dehydrated.
3. Check tightness of all electrical connections.
4. Open the liquid line and suction line service valves.
5. Be sure the unit is properly charged. See "Preliminary Charge", below.
6. The electrical power source must agree with the unit's nameplate rating.
7. *The crankcase heater must be firmly attached to the compressor crankcase. Be sure the crankcase is warm (heater must be on for 24 hours before starting compressor).*

Turn On Crankcase Heater — *Turn on the crankcase heater for 24 hours before starting the unit to be sure all the refrigerant is out of the oil*. To energize the crankcase heater, proceed as follows:

1. Set the space thermostat set point above the space temperature so there is no demand for cooling.
2. Close the field disconnect.

Preliminary Charge — Before starting the unit, charge liquid refrigerant into the high side of the system through the liquid service valve. The amount of refrigerant added must be at least 80% of the operating charge listed in the Physical Data table (Tables 1A through 2B, pages 5 through 8). Allow high and low side pressures to equalize before starting compressor. If pressures do not equalize readily, charge vapor on low side of system to assure charge in the evaporator. Refer to GTAC II, Module 5, Charging, Recover, Recycling, and Reclamation for liquid charging procedures.

⚠ CAUTION

UNIT DAMAGE HAZARD

Failure to follow this caution may result in equipment damage.

Prior to starting compressor, a preliminary charge of refrigerant must be added to avoid possible compressor damage.

START-UP

38AU Units — The compressor crankcase heater must be on for 24 hours before start-up. After the heater has been on for 24 hours, the unit can be started. If no time elapsed since the preliminary charge step was completed, it is unnecessary to wait the 24-hour period.

PRELIMINARY CHECKS

1. Check that electric power supply agrees with unit nameplate data.
2. Verify that the compressor crankcase heater is securely in place.
3. Check that the compressor crankcase heater has been on at least 24 hours.
4. Recheck for leaks using the procedure outlined in the Pre-Start-Up section, Leak Test and Dehydration. If any leaks are detected, repair as required. Evacuate and dehydrate as described in the Leak Test and Dehydration section.
5. Ensure that the preliminary charge has been added as described in the Pre-Start-Up section, Preliminary Charge.
6. All internal wiring connections must be tight, and all barriers and covers must be in place.

NOTE: The 38AU units are factory charged with the required amount of oil. If recharging in required, use Emkarate RL 32-3MAF for the 38AU units.

COMPRESSOR ROTATION — On 3-phase units with scroll compressors, it is important to be certain that the compressor is rotating in the proper direction. To determine whether or not compressor is rotating in the proper direction:

1. Connect service gages to the suction and liquid pressure fittings.
2. Energize the compressor.
3. The suction pressure should drop and the liquid pressure should rise, as is normal on any start-up.

If the suction pressure does not drop and the liquid pressure does not rise to normal levels:

1. Turn off power to the unit, tag disconnect.
2. Reverse any two of the unit power leads.
3. Reapply power to the compressor, verify correct pressures.

The suction and liquid pressure levels should now move to their normal start-up levels.

COMPRESSOR OVERLOAD — This overload interrupts power to the compressor when either the current or internal motor winding temperature becomes excessive, and automatically resets when the internal temperature drops to a safe level. This overload may require up to 60 minutes (or longer) to reset. If the internal overload is suspected of being open, disconnect the electrical power to the unit and check the circuit through the overload with an ohmmeter or continuity tester.

ADVANCED SCROLL TEMPERATURE PROTECTION (ASTP) — Advanced Scroll Temperature Protection (ASTP) is a form of internal discharge temperature protection, used in 38AU**16 and 38AU**25 units, that unloads the scroll compressor when the internal temperature reaches approximately 300°F. At this temperature, an internal bi-metal disk valve opens and causes the scroll elements to separate, which stops compression. Suction and discharge pressures balance while the motor continues to run. The longer the compressor runs unloaded, the longer it must cool before the bi-metal disk resets. See Fig. 15.

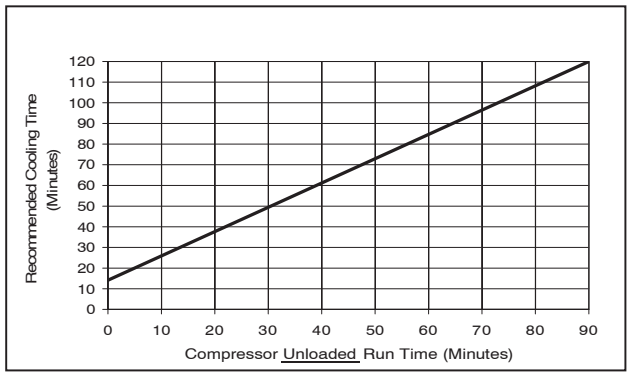

*Times are approximate.

NOTE: Various factors, including high humidity, high ambient temperature, and the presence of a sound blanket will increase cool-down times.

Fig. 15 — Recommended Minimum Cool-Down Time After Compressor is Stopped

To manually reset ASTP, the compressor should be stopped and allowed to cool. If the compressor is not stopped, the motor will run until the motor protector trips, which occurs up to 90 minutes later. Advanced Scroll Temperature Protection will reset automatically before the motor protector resets, which may take up to 2 hours. A label located above the terminal box identifies Copeland Scroll compressor models (ZP103 and ZP137) that contain this technology. See Fig. 16.

Fig. 16 — Advanced Scroll Temperature Protection Label

START UNIT — The field disconnect is closed, the indoor fan circuit breaker is closed, and the space thermostat is set above ambient so that there is no demand for cooling. Only the crankcase heater will be energized.

Reset the space thermostat below ambient so that a call for cooling is ensured.

⚠ CAUTION

UNIT DAMAGE HAZARD

Failure to follow this caution may result in equipment damage.

Never charge liquid into the low-pressure side of system. Do not overcharge. During charging or removal of refrigerant, be sure indoor-fan system is operating. Ensure both outdoor fan motors are running; bypass any Motormaster function.

ADJUST REFRIGERANT CHARGE — The unit must be charged in Cooling mode only. Refer to Cooling Charging Charts, Fig. 17 through Fig. 20. For applications with line lengths greater than 100 ft, contact Carrier representative. Vary refrigerant until the conditions of the chart are met. Note that the charging charts are different from the type normally used. The charts are based on charging the units to the correct subcooling for the various operating conditions. Accurate pressure gage and temperature sensing device are required. Connect the pressure gage to the service port on the liquid line service valve. Mount the temperature sensing device on the liquid line close to the liquid line service valve, and insulate it so that outdoor ambient temperature does not affect the reading. Indoor airflow must be within the unit's normal operating range. Operate the unit for a minimum of 15 minutes. Ensure that pressure and temperature readings have stabilized. Plot the liquid pressure and temperature on chart and add or reduce the charge to meet the curve. Adjust the charge to conform with the charging chart, using the liquid pressure and temperature to read the chart.

FINAL CHECKS — Ensure that all safety controls are operating, control panel covers are on, and the service panels are in place.

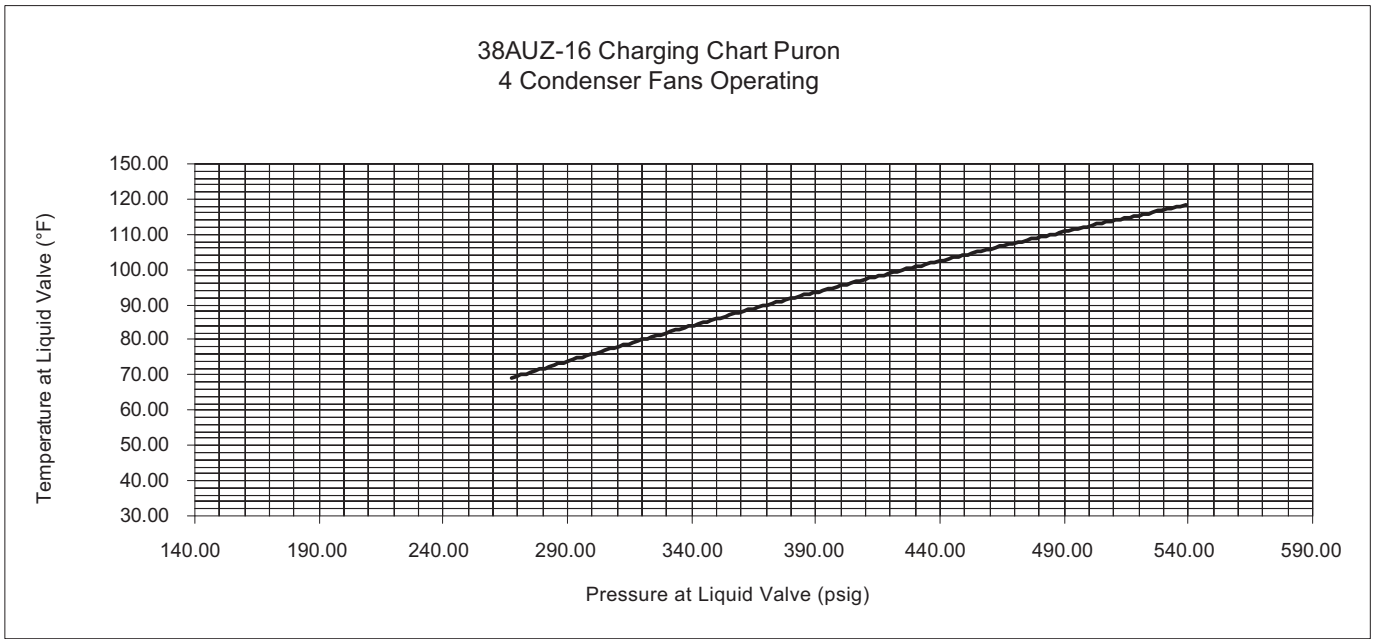

Fig. 17 — 38AUZ*16 Charging Chart

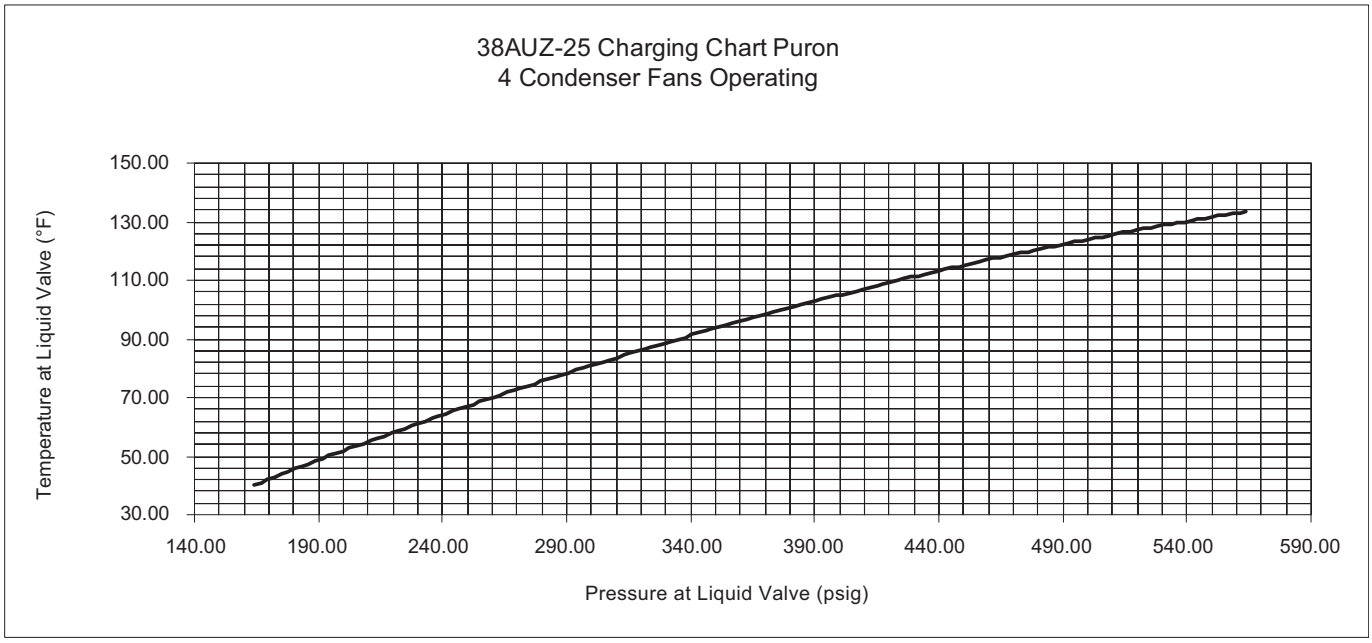

Fig. 18 — 38AUZ*25 Charging Chart

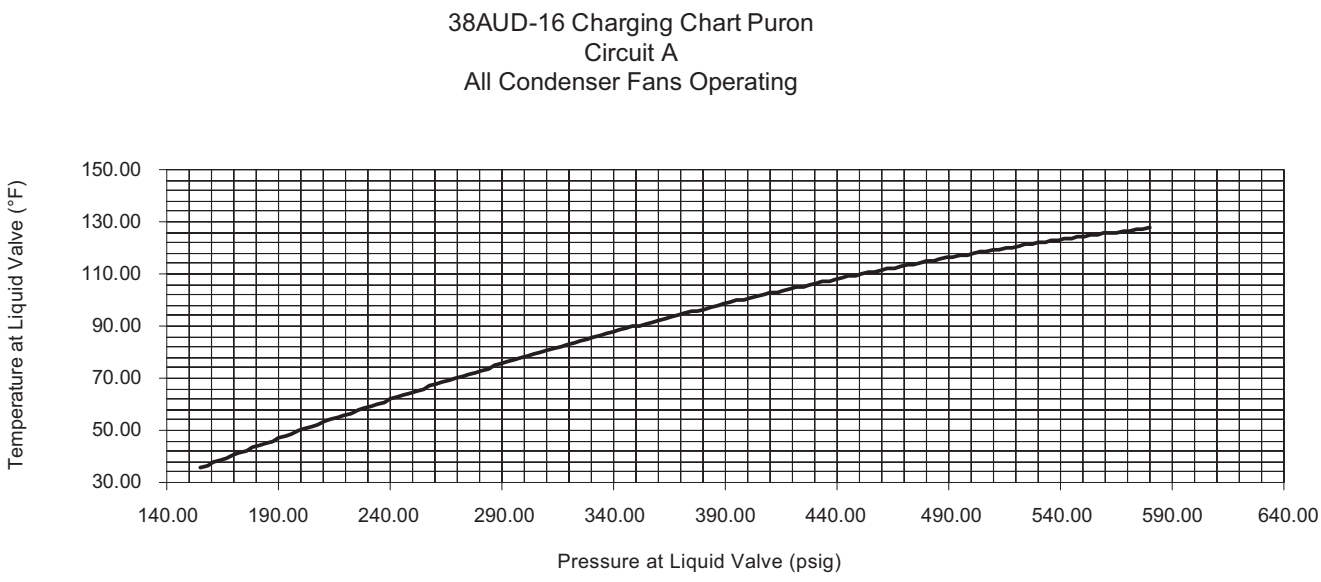

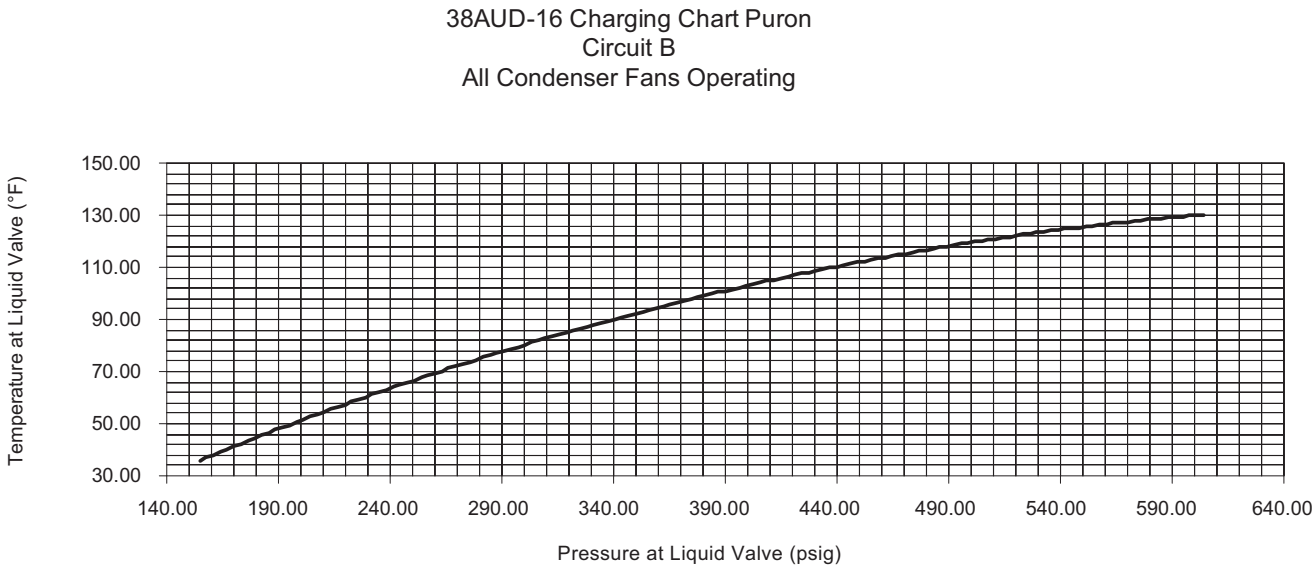

Fig. 19 — 38AUD*16 Charging Chart

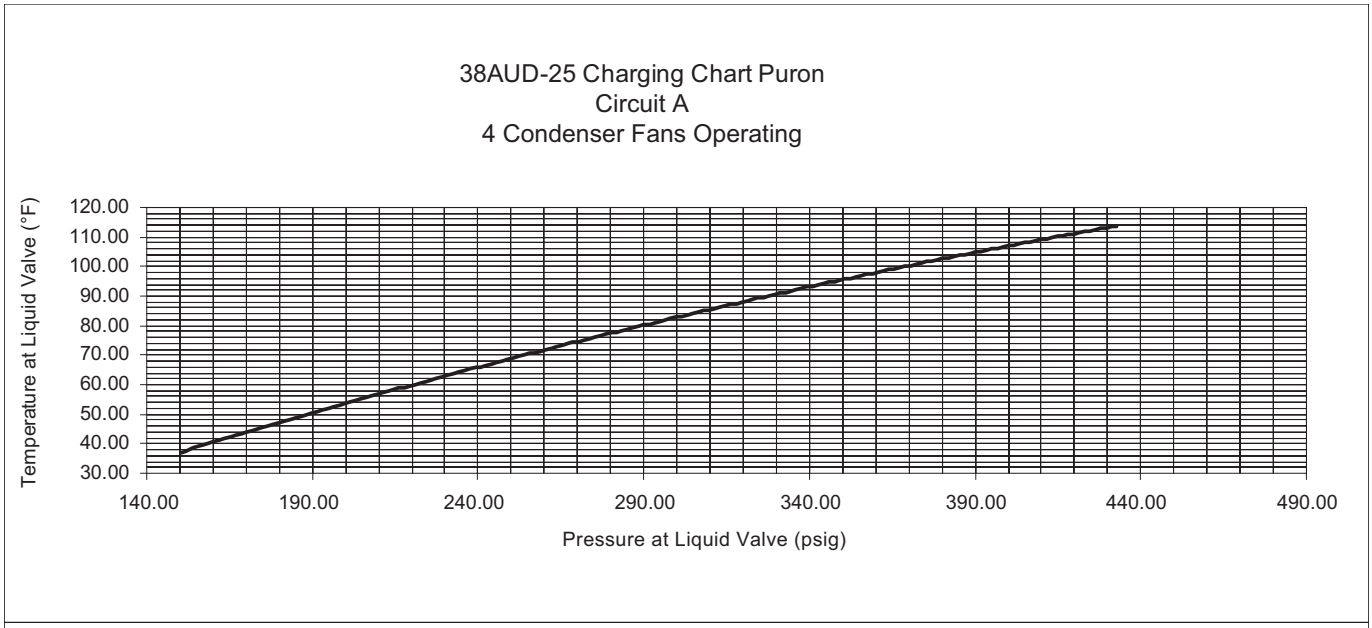

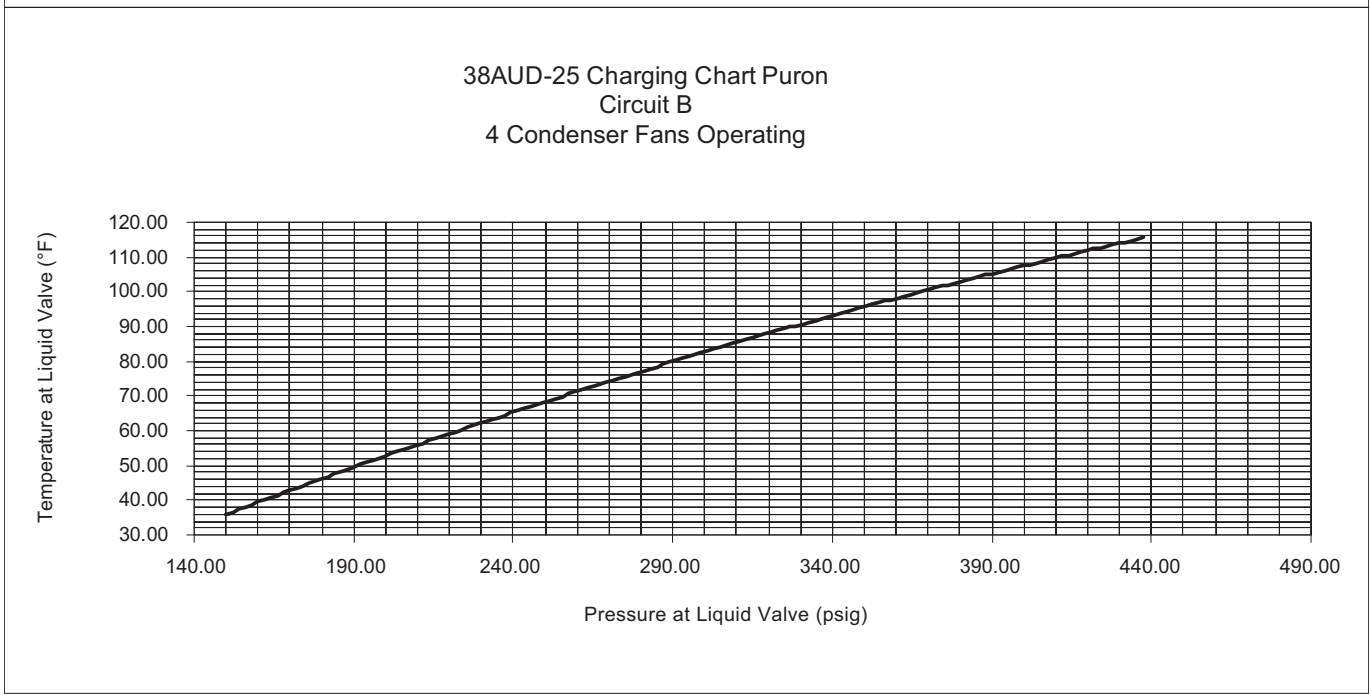

Fig. 20 — 38AUD*25 Charging Chart

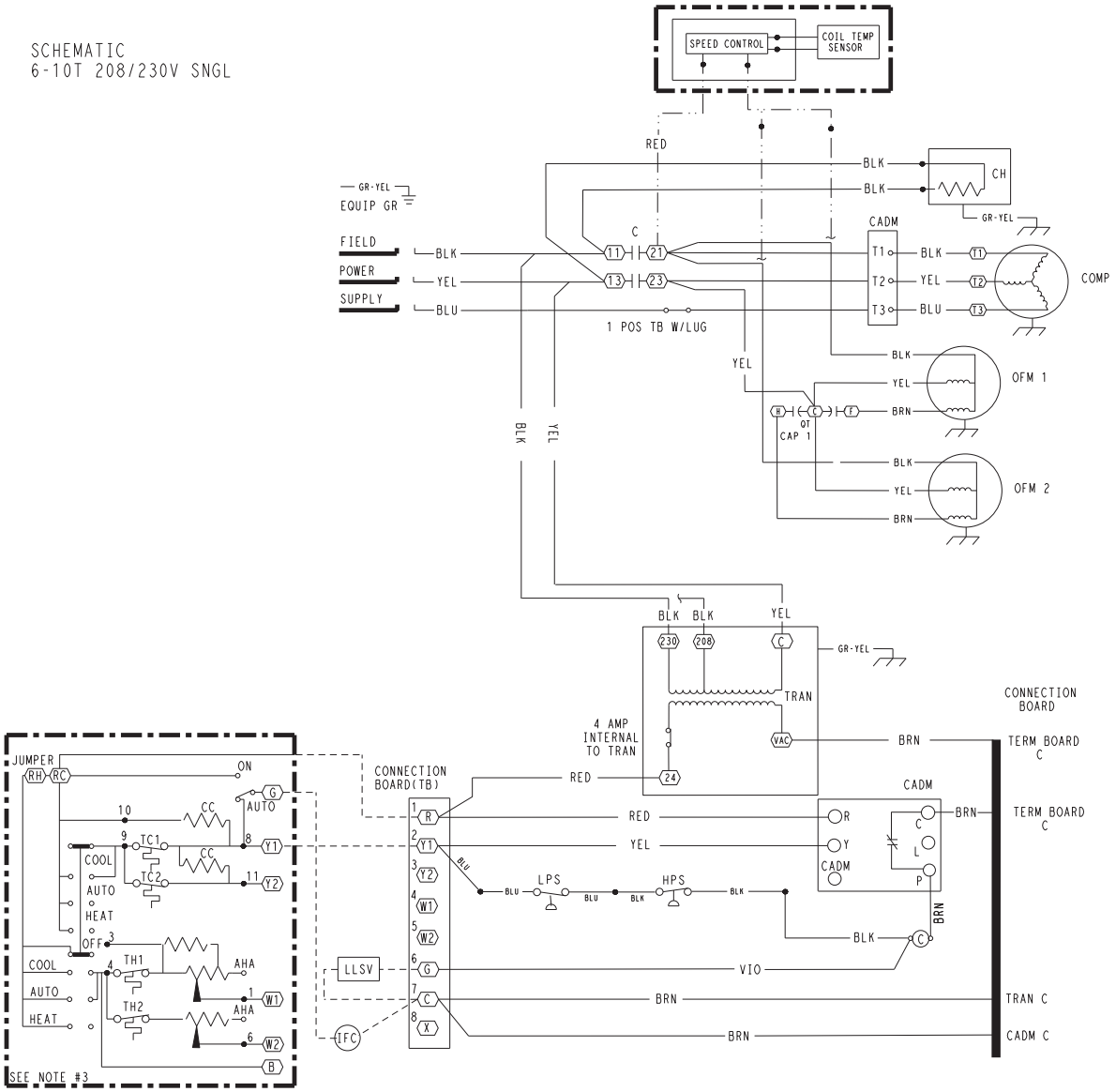

Fig. 21 — 38AU Wiring Diagram

OPERATING SEQUENCE

Base Unit Controls

Indoor (Supply) Fan

The indoor fan contactor (IFC) is remotely located at the fan coil or fan section. If the thermostat fan operation is selected as Continuous, the IFC is energized and the indoor (supply) fan motor runs continuously. If the thermostat fan operation is selected as Automatic, the IFC will be energized on a call for Cooling; indoor (supply) fan motor runs. When thermostat call for Cooling is satisfied, the IFC is de-energized and indoor (supply) fan motor stops.

Cooling, Unit Without Economizer

On a thermostat call for Cooling, IFC will be energized and indoor (supply) fan motor runs. Thermostat contact TC1 closes; terminal Y1 at 38AU unit receives 24-v. 24-v received at CADM terminal Y. If anti-recycle time delay period has not expired, CADM relay will remain open, preventing compressor start. When safety pressure switches are closed, the liquid line solenoid valve opens. When CADM time delay expires, the compressor contactor is energized; both outdoor fan motors start and compressor starts.

When space cooling load is satisfied, thermostat contacts TC1 open, removing 24-v at 38AU terminal Y. Compressor and outdoor fan motors stop. Liquid line solenoid valve is de-energized and valve closes. CADM begins its three-minute anti-recycle time delay.

If either the Low Pressure Switch or High Pressure Switch opens while thermostat contact TC1 remains closed, the compressor contactor is de-energized (both fan motors and compressor stop) and liquid line solenoid is de-energized (valve closes). CADM initiates a TRIP event (cooling demand sensed at CADM terminal Y but no current is measured at T1, T2, T3 motor sensors); CADM relay opens and RED LED is illuminated. TRIP condition maintains lockout of compressor operation until CADM is manually reset. Reset CADM by cycling unit main power.

Complete system shutdown may be caused by loss of main power, open compressor internal overload, open low-pressure or high-pressure switch, or a fault detected by the CADM logic. Compressor operation without cooling may indicate the compressor's ASTP feature is active; disconnect unit power and allow compressor to cool. See Service section for further details.

Cooling, Unit With Economizer

Refer to fan coil unit installation instructions and economizer accessory installation instructions for operating sequences when system is equipped with accessory economizer.

Heating

Refer to fan coil unit installation instructions and accessory heating device installation instructions for operating sequences in heating mode.

ROUTINE SYSTEM MAINTENANCE

These items should be part of a routine maintenance program, to be checked every month or two, until a specific schedule for each can be identified for this installation:

Quarterly Inspection (and 30 days after initial start)

Indoor section

- Condenser coil cleanliness checked.
- Return air filter replacement
- Outdoor hood inlet filters cleaned
- Belt tension checked
- Belt condition checked
- Pulley alignment checked
- Fan shaft bearing locking collar tightness checked
- Condensate drain checked

Seasonal Maintenance

These items should be checked at the beginning of each season (or more often if local conditions and usage patterns dictate):

Air Conditioning

- Condenser fan motor mounting bolts tightness
- Compressor mounting bolts
- Condenser fan blade positioning
- Control box cleanliness and wiring condition
- Wire terminal tightness
- Refrigerant charge level
- Evaporator coil cleaning
- Evaporator blower motor amperage

Heating

- Power wire connections
- Fuses ready
- Manual-reset limit switch is closed

Economizer or Outside Air Damper

- Inlet filters condition
- Check damper travel (economizer)
- Check gear and dampers for debris and dirt

SERVICE

Comfort Alert Diagnostic Module

The Comfort Alert Diagnostic Module (CADM) monitors and analyzes data from the Copeland Scroll® three-phase compressor and the thermostat demand. The CADM also provides a 3-minute anti-recycle time delay to compressor cycling.

The CADM detects causes for electrical and system related failures without any sensors. Flashing LEDs communicate the Alert codes to guide service technicians in accurately and quickly troubleshooting the system and determining root cause for the failure.

Inputs to the CADM include 24-vac power, thermostat Y1, compressor contactor coil (common side) and compressor power leads (from the compressor contactor).

Input	Terminal	Voltage
Control Power	R	24-V
Control Common	C	24-V
Cooling	Y	24-V
Contactor Coil	P	24-V
Line A	T1	Line
Line B	T2	Line
Line C	T3	Line

Control of the compressor contactor coil is through a normally-closed (power on the module) contact between terminals P and C.

Communications of status and alert conditions is through three LEDs located on the top edge of the module housing (see Fig. 22): POWER (green), ALERT (yellow), and TRIP (red).

The POWER LED indicates the presence of control power to the CADM.

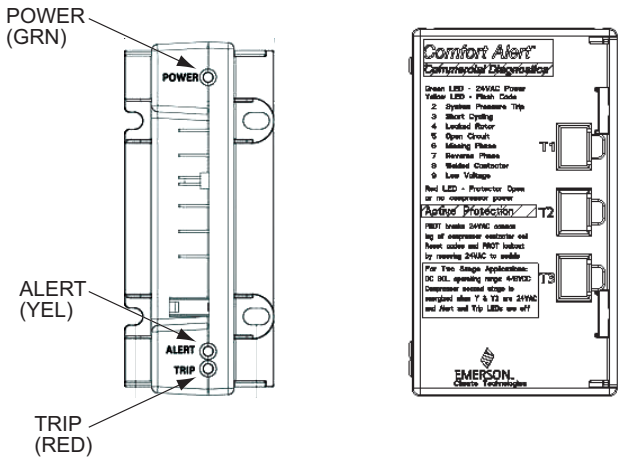

Fig. 22 — CADM Housing/LED Locations

The ALERT LED indicates an abnormal condition exists in the system through a flash code. The ALERT LED will blink a number of times consecutively, pause and the repeat the process. The number of blinks, defined in Table 8, correlates to a particular abnormal condition; troubleshooting tips are provided for each Alert code. Reset of the ALERT may be automatic or manual. If the fault condition causing the Alert is self-corrected, the Alert code will be removed and the CADM will automatically reset and allow the system to restart normally. Manual reset requires that main power to the 38AU unit be recycled after the cause for the Alert condition has been detected and corrected.

The TRIP LED indicates either a time-delay period is currently active (RED LED is blinking) or the module has locked out the compressor (RED LED is on steady). A lockout condition will occur when the CADM detects a thermostat demand at input Y but there is no power at the compressor line terminals T1 or T2 or T3. This lockout can occur due to a safety switch (LPS or HPS) opening and de-energizing the compressor contactor, the compressor-motor internal overload opens, or other internal power interruption has occurred. Reset of the TRIP LED requires that unit main power be recycled after the loss of power to the compressor condition has been detected and corrected.

Simultaneous Blinking of YELLOW and RED LEDs indicates control power input to the CADM is low. Check control circuit transformer and wiring.

Troubleshooting the CADM Wiring – Flashing LEDs also indicate wiring problems to the CADM. See Table 9 for discussion of additional LED flash codes and troubleshooting instructions.

Table 8 — LED Status Codes

Status LED	Status LED Description	Status LED Troubleshooting Information
Green “POWER”	Module has power	Supply voltage is present at module terminals
Red “TRIP” LED On Solid	Thermostat demand signal Y is present, but the compressor is not running.	1. Compressor protector is open 2. Condensing unit power disconnect is open 3. Compressor circuit breaker or fuse(s) is open 4. Broken supply wires or connector is not making contact 5. Compressor power wires not routed through Comfort Alert 6. Compressor contactor has failed open
Red “TRIP” LED Flashing	The anti-short cycle timer (3 minutes), in module is preventing compressor restart.	
Module locks out compressor when compressor damaging ALERT code appears. Lockout ALERT codes are noted in the Status LED Description. During a compressor lock out, 24VAC power must be removed from module to manually reset.		
Yellow “ALERT” LED On Solid	A short circuit or over current condition exists on PROT terminal.	1. Compressor contactor coil shorted 2. Electrical load too high for PROT circuit (maximum 1 Amp) 3. 24 V AC wired directly to PROT terminal
Yellow “ALERT” Flash Code 2	System Pressure Trip Discharge pressure out of limits or compressor overload (if no high pressure switch in system) LOCKOUT	1. High head pressure 2. Condenser coil poor air circulation (dirty, blocked, damaged) 3. Condenser fan is not running 4. If low pressure switch is open: Refer to Code 3 for troubleshooting
Yellow “ALERT” Flash Code 3	Short Cycling Compressor is running only briefly LOCKOUT	1. If low pressure switch is open: a. Low refrigerant charge b. Evaporator blower is not running c. Evaporator coil is frozen d. Faulty metering device e. Condenser coil is dirty f. Liquid line restriction (filter drier blocked if present) 2. If high pressure switch is open, go to Flash Code 2 information 3. Intermittent thermostat demand signal 4. System or control board defective
Yellow “ALERT” Flash Code 4	Locked Rotor LOCKOUT	1. Low line voltage to compressor 2. Excessive liquid refrigerant in compressor 3. Compressor bearings are seized
Yellow “ALERT” Flash Code 5	Open Circuit	1. Condensing unit power disconnect is open 2. Compressor circuit breaker or fuses are open 3. Compressor contactor has failed open 4. High pressure switch is open and requires manual reset 5. Broken supply wires or connector is not making contact 6. Unusually long compressor protector reset time due to extreme ambient temperature 7. Compressor windings are damaged
Yellow “ALERT” Flash Code 6	Missing Phase LOCKOUT	1. Compressor fuse is open on one phase 2. Broken wire or connector on one phase 3. Compressor motor winding is damaged 4. Utility supply has dropped one phase
Yellow “ALERT” Flash Code 7	Reverse Phase LOCKOUT	1. Compressor running backward due to supply phase reversal
Yellow “ALERT” Flash Code 8	Welded Contactor Compressor always runs	1. Compressor contactor has failed closed 2. Thermostat demand signal not connected to module
Yellow “ALERT” Flash Code 9	Low Voltage Control circuit < 18VAC	1. Control circuit transformer is overloaded 2. Low line voltage to compressor

Table 9 — CADM Troubleshooting

Miswired Module Indication	Recommended Troubleshooting Action
Green LED is not on, module does not power up	Determine if both R and C module terminals are connected. Verify voltage in present at module's R and C terminals. **NOTE:** The CADM requires a constant nominal 24VAC power supply. The wiring to the module's R and C terminals must be directly from the control transformer. The module cannot receive its power from another device that will interrupt the 24VAC power supply. See Fig. 22, the 38AU Wiring Diagram.
Green LED Intermittent, module powers up only when compressor runs	Determine if R and Y terminals are wired in reverse. Verify module's R and C terminals have a constant source. See "**NOTE**" above for details on R and C wiring.
TRIP LED is on but system and compressor check OK	Verify Y terminal is wired properly per the 38AU wiring diagram (see Fig. 21). Verify voltage at contactor coil falls below 0.5VAC when off. Verify 24VAQC is present across Y and C when thermostat demand signal is present. If not, R and C are reverse wired.
TRIP LED and ALERT LED flashing together	Verify R and C terminals are supplied with 19-28VAC.
ALERT Flash Code 3 (Compressor Short Cycling) displayed incorrectly	Verify Y terminal is connected to 24VAC at contactor coil. Verify voltage at contactor coil falls below 0.5VAC when off.
ALERT Flash Code 5 or 6 (Open Circuit, Missing Phase) displayed incorrectly	Check that compressor T1 and T3 wires are through module's current sensing holes. Verify Y terminal is connected to 24VAC at contactor coil. Verify voltage at contactor coil falls below 0.5VAC when off.
Alert Flash Code * (Welded Contactor) displayed incorrectly	Determine if module's Y terminal is connected. Verify Y terminal is connected to 24VAC at contactor coil. Verify 24VAC is present across Y and C when thermostat demand signal is present. If not, R and C are reverse wired. Verify voltage at contactor coil falls below 0.5VAC when off.

Crankcase Heater — The heater prevents refrigerant migration and compressor oil dilution during shutdown whenever compressor is not operating. The heater is wired to cycle with the compressor; the heater is off when compressor is running, and on when compressor is off.

The crankcase heater will operate as long as the power circuit is energized.

Compressor Protection

COMPRESSOR OVERTEMPERATURE PROTECTION (IP) — A thermostat installed on the compressor motor winding reacts to excessively high winding temperatures and shuts off the compressor.

CRANKCASE HEATER — The heater minimizes absorption of liquid refrigerant by oil in the crankcase during brief or extended shutdown periods. The main disconnect must be on to energize the crankcase heater.

> IMPORTANT: Never open any switch or disconnect that energizes the crankcase heater unless unit is being serviced or is to be shut down for a prolonged period. After a prolonged shutdown on a service job, energize the crankcase heater for 24 hours before starting the compressor.

ADVANCED SCROLL TEMPERATURE PROTECTION (ASTP) — See "Advanced Scroll Temperature Protection (ASTP)" on page 18.

Low-Pressure Switch — The 38AU low-pressure switch is stem-mounted on the suction line. Switches are all fixed, non-adjustable type.

High-Pressure Switch — The 38AU high-pressure switch is stem-mounted on the discharge line. The switch is a fixed, non-adjustable type.

Outdoor Fans — Each fan is supported by a formed-wire mount bolted to the fan deck and covered with a wire guard. Fan motors have permanently lubricated bearings.

Lubrication

FAN MOTORS have sealed bearings. No provisions are made for lubrication.

COMPRESSOR has its own oil supply. Loss of oil due to a leak in the system should be the only reason for adding oil after the system has been in operation.

NOVATION™ Coil Cleaning and Maintenance —

To clean the NOVATION condenser coil, chemicals are NOT to be used; only water is approved as the cleaning solution. Only clean potable water is authorized for cleaning NOVATION condensers.

Clean the coil as follows:

1. Turn off unit power.
2. Remove screws holding rear corner posts and top cover in place. Pivot top cover up 12 to 18 in. (305 to 457 mm) and support with a rigid support. See Fig. 23.

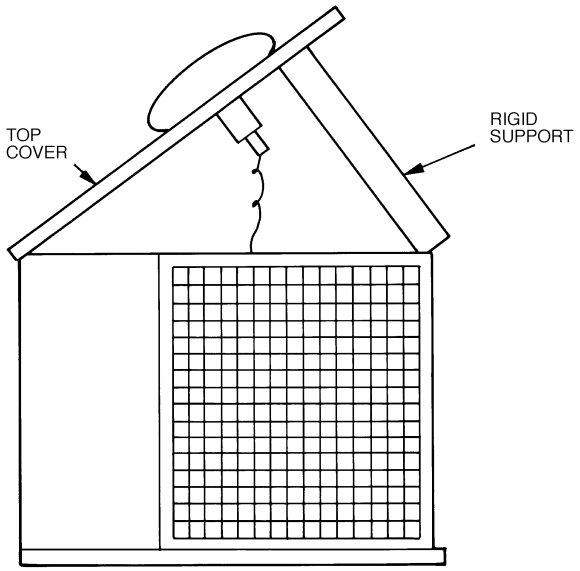

Fig. 23 — Pivot and Support Top Cover

3. Carefully remove any foreign objects or debris attached to the coil face or trapped within the mounting frame and brackets.
4. Using a high pressure water sprayer, purge any soap or industrial cleaners from hose and/or dilution tank prior to wetting the coil.Clean condenser face by spraying the coil core steadily and uniformly from top to bottom, directing the spray straight into or toward the coil face. Do not exceed 900 psig or a 45 degree angle; nozzle must be at least 12 in. (30 cm) from the coil face. Reduce pressure and use caution to prevent damage to air centers (fins). Do not fracture the braze between air centers and refrigerant tubes. Allow water to drain from the coil core and check for refrigerant leaks prior to start−up.
5. Replace top cover and rear corner posts.

⚠ CAUTION

EQUIPMENT DAMAGE HAZARD

Failure to follow this caution may result in equipment damage.

Chemical cleaning should NOT be used on the aluminum microchannel (NOVATION) condenser. Damage to the coil may occur. Only approved cleaning is recommended.

Repairing NOVATION Condenser Tube Leaks

RCD offers service repair kit Part Number 50TJ660007 for repairing tube leaks in the NOVATION coil crosstubes. This kit includes approved braze materials (aluminum fluxcore braze rods), a heat shield, a stainless steel brush, replacement fin segments, adhesive for replacing fin segments, and instructions specific to the NOVATION aluminum coil. See EPIC for instruction sheet 99TA526379.

The repair procedure requires the use of MAPP gas and torch (must be supplied by servicer) instead of conventional oxyacetylene fuel and torch. While the flame temperature for MAPP is lower than that of oxyacetylene (and thus provides more flexibility when working on aluminum), the flame temperature is still higher than the melting temperature of aluminum, so user caution is required. Follow instructions carefully. Use the heat shield.

Replacing NOVATION Condenser Coil

The service replacement coil is preformed and is equipped with transition joints with copper stub tubes. When brazing the connection joints to the unit tubing, use a wet cloth around the aluminum tube at the transition joint. Avoid applying torch flame directly onto the aluminum tubing.

Routine Cleaning of Round-Tube Plate Fin (RTPF) Coils — Periodic cleaning with Totaline® environmentally sound coil cleaner is essential to extend the life of RTPF coils. This cleaner is available from Carrier Replacement parts division as part number P902-0301 for a one gallon container, and part number P902-0305 for a 5 gallon container. It is recommended that all RTPF coils, with the exception of NOVATION coils, be cleaned with the Totaline environmentally sound coil cleaner as described below.

NOTE: Do NOT use Totaline® environmentally sound coil cleaner, or any other coil cleaner on NOVATION coils. See "NOVATION Coil Cleaning and Maintenance" for instructions on cleaning NOVATION coils.

Coil cleaning should be part of the unit's regularly scheduled maintenance procedures to ensure long life of the coil. Failure to clean the coils may result in reduced durability in the environment.

Avoid the use of:

- coil brighteners
- acid cleaning prior to painting
- high pressure washers
- poor quality water for cleaning

Totaline environmentally sound coil cleaner is non-flammable, hypoallergenic, non-bacterial, and a USDA accepted biodegradable agent that will not harm the coil or surrounding components such as electrical wiring, painted metal surfaces, or insulation. Use of non-recommended coil cleaners is strongly discouraged since coil and unit durability could be affected.

Totaline Environmentally Sound Coil Cleaner Application Equipment

- $2^1/_2$ gallon garden sprayer
- water rinse with low velocity spray nozzle

⚠ CAUTION

UNIT DAMAGE HAZARD

Failure to follow this caution may result in corrosion and damage to the unit.

Harsh chemicals, household bleach or acid or basic cleaners should not be used to clean outdoor or indoor coils or any kind. These cleaners can be very difficult to rinse out of the coil and can accelerate corrosion at the fin/tube interface where dissimilar materials are in contact. If there is dirt below the surface of the coil use the Totaline environmentally sound coil cleaner as described above.

⚠ CAUTION

UNIT RELIABILITY HAZARD

Failure to follow this caution may result in reduced unit performance.

High velocity water from a pressure washer, garden hose, or compressed air should never be used to clean a coil. The force of the water or air jet will bend the fin edges and increase airside pressure drop.

Totaline Environmentally Sound Coil Cleaner Application Instructions

NOTE: Proper eye protection such as safety glasses is recommended during mixing and application.

1. Turn off unit power.
2. Remove screws holding rear corner post and top cover in place. Pivot top cover up 12 to 18 inches (305 to 457 mm) and support with a rigid support. See Fig. 23.
3. Remove all surface loaded fibers and dirt with a vacuum cleaner. If a vacuum cleaner is not available, a soft non-metalic bristle brush may be used. In either case, the tool should be applied in the direction of the fins. Coil surfaces can be easily damaged (fin edges can be easily bent over and damage to the coating of a protected coil) if the tool is applied across the fins.

NOTE: Use of a water stream, such as a garden hose, against surface loaded coil will drive the fibers and dirt into the coil, making cleaning efforts more difficult. Surface loaded fibers must be completely removed prior to using low velocity clean water rinse.

4. Using a low velocity garden hose thoroughly wet finned surfaces with clean water. Be careful not to bend the fins.
5. Mix Totaline environmentally sound coil cleaner in a $2^1/_2$ gallon garden sprayer according to the instructions included with the cleaner. The optimum solution temperature is 100°F (38°C).

NOTE: Do NOT USE water in excess of 130°F (54°C), as the enzymatic activity will be destroyed.

6. Thoroughly apply Totaline environmentally sound coil cleaner solution to all coil surfaces including the finned area, tube sheets and coil headers.
7. Hold garden sprayer nozzle close to finned areas and apply cleaner with a vertical, up-and-down motion. Avoid spraying in horizontal pattern to minimize potential for fin damage.
8. Ensure cleaner thoroughly penetrates deep into finned areas.
9. Interior and exterior finned areas must be thoroughly cleaned.
10. Finned surfaces should remain wet with cleaning solution for 10 minutes.
11. Ensure surfaces are not allowed to dry before rinsing. Reapply cleaner as needed to ensure 10-minute saturation is achieved.
12. Thoroughly rinse all surfaces with low velocity clean water using downward rinsing motion of water spray nozzle. Protect fins from damage from the spray nozzle.
13. Replace top cover and rear corner posts.

Field Refrigerant Access Ports — Field service access to refrigerant pressures is through the access ports located at the service valves (see Fig. 7). These ports are ¼-in SAE Flare couplings with Schrader check valves and service caps. Use these ports to admit nitrogen to the field tubing during brazing, to evacuate the tubing and evaporator coil, to admit initial refrigerant charge into the low-side of the system and when checking and adjusting the system refrigerant charge. When service activities are completed, ensure the service caps are in place and secure; check for leaks. If the Schrader check valve must be removed and re-installed, tighten to 2-3 in-lbs (23-34 N-cm).

Factory High-Flow Access Ports — There are two additional access ports in the system - on the suction tube between the compressor and the suction service valve and on the liquid tube near the liquid service valve (see Fig. 7). These are brass fittings with black plastic caps. The hose connection fittings are standard ¼-in SAE Male Flare couplings.

The brass fittings are two-piece High Flow valves, with a receptacle base brazed to the tubing and an integral spring-closed check valve core screwed into the base. (See Fig. 24) This check valve is permanently assembled into this core body and cannot be serviced separately; replace the entire core body if necessary. Service tools are available from RCD that allow the replacement of the check valve core without having to recover the entire system refrigerant charge. Apply compressor refrigerant oil to the check valve core's bottom o-ring. Install the fitting body with 96 ±-10 in-lbs (1085 ±23 N-cm) of torque; do not overtighten.

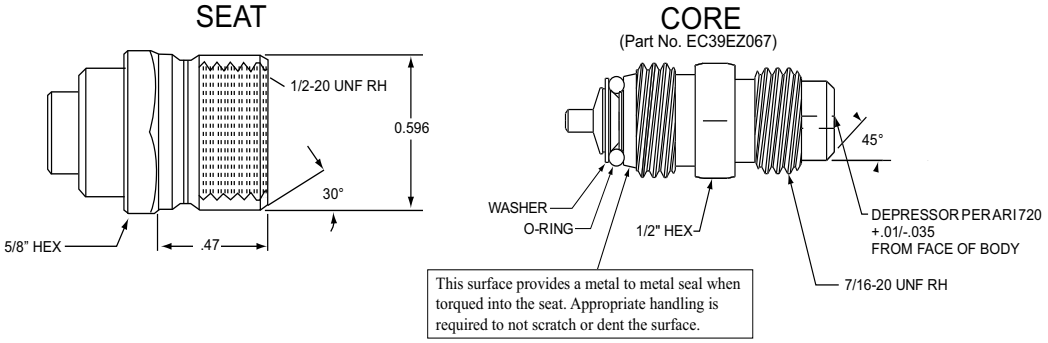

Fig. 24 — CoreMax Access Port Assembly

FASTENER TORQUE VALUES

Table 10 — Torque Values

Compressor mounting bolts	65–75 in–lbs	(734–847 N–cm)
Condenser fan motor mounting bolts	20 ±2 in–lbs	(226 ±23 N–cm)
Condenser fan hub setscrew	84 ±2 in–lbs	(949 ±136 N–cm)
High-flow service port	96 ±10 in–lbs	(1085 ±23 N–cm)
Schrader-type service check valve	2–3 in–lbs	(23–34 N–cm)

TROUBLESHOOTING

PROBLEM	SOLUTION
COMPRESSOR DOES NOT RUN	
Contactor Open	
1. Power off.	1. Restore power.
2. Fuses blown in field power circuit.	2. After finding cause and correcting, replace with correct size fuse.
3. No control power.	3. Check control transformer primary connections and circuit breaker.
4. Thermostat circuit open.	4. Check thermostat setting.
5. Safety device lockout circuit active.	5. Reset lockout circuit.
6. Low-pressure switch open.	6. Check for refrigerant undercharge, obstruction of indoor airflow. Make sure liquid line solenoid valve(s) is open.
7. High-pressure switch open.	7. Check for refrigerant overcharge, obstruction of outdoor airflow, air in system. Be sure outdoor fans are operating correctly.
8. Compressor overtemperature switch open.	8. Check for open condition. Allow for reset. Replace if defective.
9. Loose electrical connections.	9. Tighten all connections.
10. Compressor stuck.	10. See compressor service literature.
Contactor Closed	
1. Compressor leads loose.	1. Check connections.
2. Motor windings open.	2. See compressor service literature.
3. Single phasing.	3. Check for blown fuse. Check for loose connection at compressor terminal.
COMPRESSOR STOPS ON HIGH-PRESSURE SWITCH	
Outdoor Fan On	
1. High-pressure switch faulty.	1. Replace switch.
2. Reversed fan rotation.	2. Confirm rotation, correct if necessary.
3. Airflow restricted.	3. Remove obstruction.
4. Air recirculating.	4. Clear airflow area.
5. Noncondensables in system.	5. Recover refrigerant and recharge as required.
6. Refrigerant overcharge.	6. Recover refrigerant as required.
7. Line voltage incorrect.	7. Consult power company.
8. Refrigerant system restrictions.	8. Check or replace filter drier, expansion valve, etc.
Outdoor Fan Off	
1. Fan slips on shaft.	1. Tighten fan hub setscrews.
2. Motor not running.	2. Check power and capacitor.
3. Motor bearings stuck.	3. Replace bearings.
4. Motor overload open.	4. Check overload rating. Check for fan blade obstruction.
5. Motor burned out.	5. Replace motor.
COMPRESSOR CYCLES ON LOW-PRESSURE SWITCH	
Indoor-Air Fan Running	
1. Liquid line solenoid valve(s) fails to open.	1. Check liquid line solenoid valve(s) for proper operation. Replace if necessary.
2. Filter drier plugged.	2. Replace filter drier.
3. Expansion valve power head defective.	3. Replace power head.
4. Low refrigerant charge.	4. Add charge. Check low-pressure switch setting.
Airflow Restricted	
1. Coil iced up.	1. Check refrigerant charge.
2. Coil dirty.	2. Clean coil fins.
3. Air filters dirty.	3. Clean or replace filters.
4. Dampers closed.	4. Check damper operation and position.
Indoor-Air Fan Stopped	
1. Electrical connections loose.	1. Tighten all connections.
2. Fan relay defective.	2. Replace relay.
3. Motor overload open.	3. Power supply.
4. Motor defective.	4. Replace motor.
5. Fan belt broken or slipping.	5. Replace or tighten belt.

TROUBLESHOOTING (cont)

PROBLEM	SOLUTION
COMPRESSOR RUNNING BUT COOLING INSUFFICIENT	
Suction Pressure Low	
1. Refrigerant charge low.	1. Add refrigerant.
2. Head pressure low.	2. Check refrigerant charge. Check outdoor-air fan thermostat settings.
3. Air filters dirty.	3. Clean or replace filters.
4. Expansion valve power head defective.	4. Replace power head.
5. Indoor coil partially iced.	5. Check low-pressure setting.
6. Indoor airflow restricted.	6. Remove obstruction.
Suction Pressure High	
1. Unloaders not functioning	1. Check unloader adjustments. Check unloader setting.
2. Heat load excessive.	2. Check for open doors or windows in vicinity of fan coil.
UNIT OPERATES TOO LONG OR CONTINUOUSLY	
1. Low refrigerant charge.	1. Add refrigerant.
2. Control contacts fused.	2. Replace control.
3. Air in system.	3. Purge and evacuate system.
4. Partially plugged expansion valve or filter drier.	4. Clean or replace.
SYSTEM IS NOISY	
1. Piping vibration.	1. Support piping as required.
2. Compressor noisy.	2. Replace compressor if bearings are worn.
COMPRESSOR LOSES OIL	
1. Leak in system.	1. Repair leak.
2. Crankcase heaters not energized during shutdown.	2. Check wiring and relays. Check heater and replace if defective.
3. Improper interconnecting piping design.	3. Check piping for oil return. Replace if necessary.
FROSTED SUCTION LINE	
Expansion valve admitting excess refrigerant.	Adjust expansion valve.
HOT LIQUID LINE	
1. Shortage of refrigerant due to leak.	1. Repair leak and recharge.
2. Expansion valve opens too wide.	2. Adjust expansion valve.
FROSTED LIQUID LINE	
1. Restricted filter drier.	1. Remove restriction or replace.
2. Liquid line solenoid valve partially closed.	2. Replace valve.

APPENDIX

AIR CONDITIONER AND HEAT PUMP WITH PURON® — QUICK REFERENCE GUIDE

- Puron® (R-410A) refrigerant operates at 50 percent to 70 percent higher pressures than R-22. Be sure that servicing equipment and replacement components are designed to operate with Puron®.
- Puron® refrigerant cylinders are rose colored.
- Recovery cylinder service pressure rating must be 400 psig, DOT 4BA400 or DOT BW400.
- Puron® systems should be charged with liquid refrigerant. Use a commercial type metering device in the manifold hose when charging into suction line with compressor operating.
- Manifold sets should be 700 psig high side and 180 psig low side with 550 psig low-side retard.
- Use hoses with 700 psig service pressure rating.
- Leak detectors should be designed to detect HFC refirgerant.
- Puron®, as with other HFCs, is only compatible with POE oils.
- Vacuum pumps will not remove moisture from oil.
- Use only factory specified liquid-line filter driers with rated working pressures greater than 600 psig.
- Do not install a suction-line filter drier in liquid-line.
- POE oils absorb moisture rapidly. Do not expose oil to atmosphere.
- POE oils may cause damage to certain plastics and roofing materials.
- Wrap all filter driers and service valves with wet cloth when brazing.
- A factory approved, liquid-line filter drier is required on every unit.
- Do not use an R-22 TXV.
- If indoor unit is equipped with a TXV, it must be changed to a Puron® TXV.
- Never open system to atmosphere while it is under a vacuum.
- When system must be opened for service, recover refrigerant, break vacuum with dry nitrogen before opening system.
- Always replace filter drier after opening system for service.
- Do not vent Puron® into the atmosphere.
- Do not use capillary tube coils.
- Observe all **warnings**, **cautions**, and **bold** text.
- All Puron® heat pumps must have indoor TXV.
- Do not leave Puron® suction line driers in place for more than 72 hours.

Copyright 2009 Carrier Corp • 7310 W. Morris St. • Indianapolis, IN 46231
Printed in U.S.A. Edition Date: 09/09 **Catalog No: 38AU-03SI**

Manufacturer reserves the right to change, at any time, specifications and designs without notice and without obligations.
Replaces: New

III. START UP
START-UP CHECKLIST

I. PRELIMINARY INFORMATION

OUTDOOR: MODEL NO. _____ SERIAL NO. _____

INDOOR: AIR HANDLER MANUFACTURER _____

MODEL NO. _____ SERIAL NO. _____

ADDITIONAL ACCESSORIES _____

II. PRE-START-UP

OUTDOOR UNIT

IS THERE ANY SHIPPING DAMAGE? _____ (Y/N) _____

IF SO, WHERE: _____

_____

WILL THIS DAMAGE PREVENT UNIT START-UP? (Y/N) _____

CHECK POWER SUPPLY. DOES IT AGREE WITH UNIT? (Y/N) _____

HAS THE GROUND WIRE BEEN CONNECTED? (Y/N) _____

HAS THE CIRCUIT PROTECTION BEEN SIZED AND INSTALLED PROPERLY? (Y/N) _____

ARE THE POWER WIRES TO THE UNIT SIZED AND INSTALLED PROPERLY? (Y/N) _____

CONTROLS

ARE THERMOSTAT AND INDOOR FAN CONTROL WIRING CONNECTIONS MADE AND CHECKED? (Y/N) _____

ARE ALL WIRING TERMINALS (including main power supply) TIGHT? (Y/N) _____

HAS CRANKCASE HEATER BEEN ENERGIZED FOR 24 HOURS? (Y/N) _____

INDOOR UNIT

HAS WATER BEEN PLACED IN DRAIN PAN TO CONFIRM PROPER DRAINAGE? (Y/N) _____

ARE PROPER AIR FILTERS IN PLACE? (Y/N) _____

HAVE FAN AND MOTOR PULLEYS BEEN CHECKED FOR PROPER ALIGNMENT? (Y/N) _____

DO THE FAN BELTS HAVE PROPER TENSION? (Y/N) _____

HAS CORRECT FAN ROTATION BEEN CONFIRMED? (Y/N) _____

PIPING

ARE LIQUID LINE SOLENOID VALVES LOCATED AT THE INDOOR COILS AS REQUIRED? (Y/N) _____

HAVE LEAK CHECKS BEEN MADE AT COMPRESSOR, OUTDOOR AND INDOOR COILS, TXVs (Thermostatic Expansion Valves), SOLENOID VALVES, FILTER DRIERS, AND FUSIBLE PLUGS WITH A LEAK DETECTOR? (Y/N) _____

LOCATE, REPAIR, AND REPORT ANY LEAKS. _____

HAVE LIQUID LINE SERVICE VALVES BEEN OPENED? (Y/N) _____

HAVE SUCTION SERVICE VALVES BEEN OPENED? (Y/N) _____

CHECK VOLTAGE IMBALANCE

LINE-TO-LINE VOLTS: AB _____ V AC _____ V BC _____ V

(AB + AC + BC)/3 = AVERAGE VOLTAGE = _____ V

MAXIMUM DEVIATION FROM AVERAGE VOLTAGE = _____ V

VOLTAGE IMBALANCE = 100 X (MAX DEVIATION)/(AVERAGE VOLTAGE) = _____

IF OVER 2% VOLTAGE IMBALANCE, DO NOT ATTEMPT TO START SYSTEM!
CALL LOCAL POWER COMPANY FOR ASSISTANCE.

CHECK INDOOR UNIT FAN SPEED AND RECORD. _____

CHECK OUTDOOR UNIT FAN SPEED AND RECORD. _____

AFTER AT LEAST 10 MINUTES RUNNING TIME, RECORD THE FOLLOWING MEASUREMENTS:

SUCTION PRESSURE_____

SUCTION LINE TEMP_____

LIQUID PRESSURE_____

LIQUID LINE TEMP_____

ENTERING OUTDOOR UNIT AIR TEMP_____

LEAVING OUTDOOR UNIT AIR TEMP_____

INDOOR UNIT ENTERING-AIR DB (dry bulb) TEMP_____

INDOOR UNIT ENTERING-AIR WB (wet bulb) TEMP_____

INDOOR UNIT LEAVING-AIR DB TEMP_____

INDOOR UNIT LEAVING-AIR WB TEMP_____

COMPRESSOR AMPS (L1/L2/L3) ____/____/____

NOTES:

CUT ALONG DOTTED LINE

CUT ALONG DOTTED LINE

Copyright 2009 Carrier Corp • 7310 W. Morris St. • Indianapolis, IN 46231