# 45MULAQ
# Crossover Evaporator Coil
# Sizes 24K - 60K

# Installation Instructions

**NOTE:** Read the entire instruction manual before starting the installation.

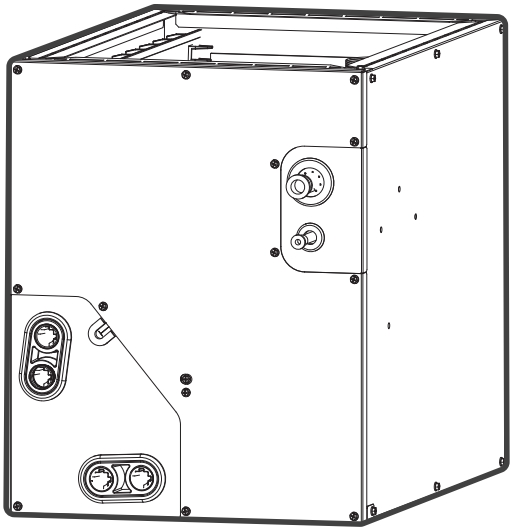

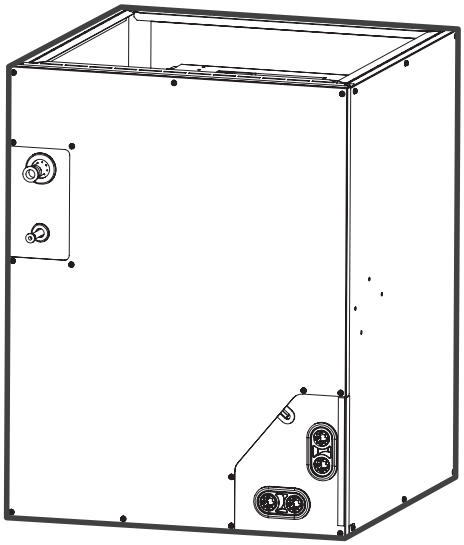

**Fig. 1 — Sizes 24K - 60K**

**NOTE:** Images are for illustration purposes **only**. Actual models may differ slightly.

## TABLE OF CONTENTS


SAFETY CONSIDERATIONS . . . . . 2
PRODUCT INSTALLATION WARNINGS . . . . . 8
ACCESSORIES . . . . . 13
INDOOR UNIT INSTALLATION . . . . . 14
SYSTEM INTRODUCTION . . . . . 15
AIR DUCT INSTALLATION . . . . . 26
CONTROL SIGNALS TO THE FURNACE. . . . . 32
TEST RUN . . . . . 34

# SAFETY CONSIDERATIONS

Installing, starting up, and servicing air- conditioning equipment can be hazardous due to system pressures, electrical components, and equipment location (roofs, elevated structures, etc.).
Only trained, qualified installers and service mechanics should install, start- up, and service this equipment.

Untrained personnel can perform basic maintenance functions such as coil cleaning. All other operations should be performed by trained service personnel only.

When working on the equipment, observe the precautions in the literature and on tags, stickers, and labels attached to the equipment.

Follow all safety codes.Wear safety glasses and work gloves. Keep a quenching cloth and a fire extinguisher nearby when brazing. Use care in handling, rigging, and setting bulky equipment.
Read these instructions thoroughly and follow all warnings or cautions included in the literature and attached to the unit. Consult local building codes and National Electrical Code (NEC) for special requirements.
Recognize safety information.

## This is the safety - alert symbol ⚠.

When you see this symbol on the unit and in instructions or manuals, be alert to the potential for personal injury. Understand these signal words: **DANGER**, **WARNING**, and **CAUTION**. These words are used with the safety- alert symbol.

**DANGER** identifies the most serious hazards which will result in severe personal injury or death.

**WARNING** signifies hazards which could result in personal injury or death.

**CAUTION** is used to identify unsafe practices which may result in minor personal injury or product and property damage.

**NOTE is used to highlight suggestions which will result in enhanced installation, reliability, or operation.**

## ⚠ WARNING

**ELECTRICAL SHOCK HAZARD**

Failure to follow this warning could result in personal injury or death.

Before installing, modifying, or servicing system, the main electrical disconnect switch must be in the OFF position. There may be more than 1 disconnect switch. Lock out and tag switch with a suitable warning label.

## ⚠ WARNING

**EXPLOSION HAZARD**

Failure to follow this warning could result in death, serious personal injury, and/or property damage.

Never use air or gases containing oxygen for leak testing or operating refrigerant compressors. Pressurized mixtures of air or gases containing oxygen can lead to an explosion.

## ⚠ CAUTION

**EQUIPMENT DAMAGE HAZARD**

Failure to follow this caution may result in equipment damage or improper operation.

Do not bury more than 36 in. (914 mm) of refrigerant pipe in the ground. If any section of pipe is buried, there must be a 6 in. (152 mm) vertical rise to the valve connections on the outdoor units. If more than the recommended length is buried, refrigerant may migrate to the cooler buried section during extended periods of system shutdown. This causes refrigerant slugging and could possibly damage the compressor at start-up.

## ⚠ WARNING

This appliance is not intended for use by persons (including children) with reduced physical, sensory or mental capabilities, or lack of experience and knowledge, unless they have been given supervision or instruction concerning use of the appliance by a person responsible for their safety. Children should be supervised to ensure that they do not play with the appliance.

## ⚠ WARNING

Only use the specified wire. If the wire is damaged, it must be replaced by the manufacturer, its service agent or similarly qualified persons in order to avoid a hazard. The product must be properly grounded at the time of installation, or electric shock may occur.

For all electrical work, follow all local and national wiring standards, regulations, and the Installation Manual. Connect the cables tightly, and clamp them securely to prevent external forces from damaging the terminal. Improper electrical connections can overheat and cause fire, and may also cause shock. All electrical connections must be made according to the Electrical Connection Diagram located on the panels of the indoor and outdoor units.

All wiring must be properly arranged to ensure that the control board cover can close properly. If the control board cover is not closed properly, it can lead to corrosion and cause the connection points on the terminal to heat up, catch fire, or cause electrical shock.

Disconnection must be incorporated in the fixed wiring in accordance with NEC, CSA and Local Codes. **Do not** share the electrical outlet with other appliances. Improper or insufficient power supply can cause fire or electric shock.

If connecting power to fixed wiring, an all-pole disconnection device which has at least 3mm clearances in all poles, and have a leakage current that may exceed 10mA, the residual current device (RCD) having a rated residual operating current not exceeding 30mA, and disconnection must be incorporated in the fixed wiring in accordance with NEC, CSA and Local Codes.

**Manufacturer reserves the right to change, at any time, specifications and designs without notice and without obligations.**

## ⚠ WARNING

**MANDATORY REQUIREMENT**

When these coils are applied with any furnace, the furnace must have the ability to have blower failure detection, air flow verification. The blower feedback should activate within one minute to shut off the gas valve.

Cannot be used on any Ultra Low NOx (ULN) furnaces

## ⚠ WARNING

Turn off the air conditioner and disconnect the power before performing any installation or repairing. Failure to do so can cause electric shock.

Installation must be performed by an authorized dealer or specialist. Defective installation can cause water leakage, electrical shock, or fire. Installation must be performed according to the installation instructions.

Improper installation can cause water leakage, electrical shock, or fire. Contact an authorized service technician for repair or maintenance of this unit. This appliance shall be installed in accordance with national wiring regulations.

Only use the included accessories, parts, and specified parts for installation. Using non-standard parts can cause water leakage, electrical shock, fire, and can cause the unit to fail.

Install the unit in a firm location that can support the unit's weight. If the chosen location cannot support the unit's weight, or the installation is not done properly, the unit may drop and cause serious injury and damage. Install drainage piping according to the instructions in this manual. Improper drainage may cause water damage to your home and property. For units that have an auxiliary electric heater, do not install the unit within 3 feet (1 meter) of any combustible materials.

If combustible gas accumulates around the unit, it may cause fire. Do not turn on the power until all work has been completed. When moving or relocating the air conditioner, consult experienced service technicians for disconnection and re-installation of the unit.

Read the information for details in "indoor unit installation" and "outdoor unit installation" sections.

**NOTE: The air conditioner's circuit board (PCB) is designed with a fuse to provide overcurrent protection. The specifications of the fuse are printed on the circuit board, for example: T3.15AL/250VAC, T5AL/250VAC, T3.15A/250VAC, T5A/250VAC, T20A/250VAC, T30A/250VAC,etc.**

**NOTE: Only a blast-proof ceramic fuse can be used.**

## ⚠ WARNING

**FOR FLAMMABLE REFRIGERANTS**

Do not use means to accelerate the defrosting process or to clean, other than those recommended by the manufacturer.

The appliance shall be stored in a room without continuously operating ignition sources (for example: open flames, an operating gas appliance or an operating electric heater).

Do not pierce or burn. Be aware that refrigerants may not contain an odor.

## ⚠ WARNING

**PERSONAL INJURY AND PROPERTY DAMAGE HAZARD**

For continued performance, reliability, and safety, the only approved accessories and replacement parts are those specified by the equipment manufacturer. The use of non-manufacturer approved parts and accessories could invalidate the equipment limited warranty and result in a fire risk, equipment malfunction, and failure.

Review the manufacturer's instructions and replacement parts catalogs available from your equipment supplier.

**WARNING** - RISK OF FIRE DUE TO FLAMMABLE REFRIGERANT USED. FOLLOW HANDLING INSTRUCTIONS CAREFULLY IN COMPLIANCE WITH NATIONAL REGULATIONS.

R-454B

R-454B

**Table 1 — Symbols displayed on the indoor unit or outdoor unit**

| | | |
|---|---|---|
| A2L | **WARNING** | This symbol shows that this appliance used a flammable refrigerant. If the refrigerant is leaked and exposed to an external ignition source, there is a risk of fire. |
| | **CAUTION** | This symbol shows that the operation manual should be read carefully. |
| | **CAUTION** | This symbol shows that a service personnel should be handling this equipment with reference to the installation manual. |
| | **CAUTION** | |
| | **CAUTION** | This symbol shows that information is available such as the operating manual or installation manual. |

**FCC**

This device complies with part 15 of the FCC Rules. Operation is subject to the following two conditions: (1) This device may not cause harmful interference, and (2) this device must accept any interference received, including interference that may cause undesired operation.

**For Class B Digital Device**

NOTE: This equipment has been tested and found to comply with the limits for a Class B digital device, pursuant to part 15 of the FCC Rules. These limits are designed to provide reasonable protection against harmful interference in a residential installation. This equipment generates, uses and can radiate radio frequency energy and, if not installed and used in accordance with the instructions may cause harmful interference to radio communications. However, there is no guarantee that interference will not occur in a particular installation. If this equipment does cause harmful interference to radio or television reception, which can be determined by turning the equipment off and on, the user is encouraged to try t o correct the interference by one or more of the following measures:

- Reorient or relocate the receiving antenna
- Increase the distance between the equipment and the receiver
- Connect the equipment into an outlet on a circuit different from that to which the receiver is connected.

Consult the dealer or an experienced radio/TV technician for assistance.

MODIFICATION: Any changes or modifications not expressly approved by the grantee of this device could void the user's authority to operate this device.

1. **Installation** (where refrigerant pipes are allowed)
   Any person who is involved with working on or breaking into a refrigerant circuit should hold a current valid certificate from an industry-accredited assessment authority, which authorizes their competence to handle refrigerants safely in accordance with an industry recognized assessment specification.
   Maintenance and repair requiring the assistance of other skilled personnel shall be carried out under the supervision of the person competent in the use of flammable refrigerants.
   That the installation of pipe-work shall be kept to a minimum.
   That pipe-work shall be protected from physical damage.
   Where refrigerant pipes shall be compliance with national gas regulations.
   That mechanical connections shall be accessible for maintenance purposes.
   Be more careful that foreign matter (oil, water, etc) does not enter the piping.
   Also, when storing the piping, securely seal the opening by pinching, taping, etc.
   All working procedure that affects safety means shall only be carried by competent persons.
   Appliance shall be stored in a well ventilated area where the room size corresponds to the room area as specified for operation.
   Joints shall be tested with detection equipment with a capability of 5 g/year of refrigerant or better, with the equipment in standstill and under operation or under a pressure of at least these standstill or operation conditions after installation. Detachable joints shall NOT be used in the indoor side of the unit (brazed, welded joint could be used). In cases that require mechanical ventilation, ventilation openings shall be kept clear of obstruction.

   **LEAK DETECTION SYSTEM** installed. Unit must be powered except for service. For the unit with refrigerant sensor, when the refrigerant sensor detects refrigerant leakage, the indoor unit will display a error code and emit a buzzing sound, the compressor of outdoor unit will immediately stop, and the indoor fan will start running. The service life of the refrigerant sensor is 15 years. When the refrigerant sensor malfunctions, the indoor unit will display the error code “FHCC”.
   The refrigerant sensor can not be repaired and can only be replaced by the manufacturer. It shall only be replaced with the sensor specified by the manufacturer.

2. **When a FLAMMABLE REFRIGERANT is used,** the requirements for installation space of appliance and/or ventilation requirements are determined according to

   - the mass charge amount (M) used in the appliance, the installation location, the type of ventilation of the location or of the appliance. piping material, pipe routing, and installation shall include protection from physical damage in operation and service, and be in compliance with national and local codes and standards, such as ASHRAE 15, IAPMO Uniform Mechanical Code, ICC International Mechanical Code, or CSA B52. All field joints shall be accessible for inspection prior to being covered or enclosed.
   that protection devices, piping, and fittings shall be protected as far as possible against adverse environmental affects, for example, the danger of water collecting and freezing in relief pipes or the accumulation of dirt and debris;
   - that piping in refrigeration systems shall be so designed and installed to minimize the likelihood of hydraulic shock damaging the system;
   - that steel pipes and components shall be protected against corrosion with a rustproof coating before applying any insulation;
   - that precautions shall be taken to avoid excessive vibration or pulsation; the minimum floor area of the room shall be mentioned in the form of a table or a single figure without reference to a formula; after completion of field piping for split systems, the field pipework shall be pressure tested with an inert gas and then vacuum tested prior to refrigerant charging, according to the following requirements:
     a. The minimum test pressure for the low side of the system shall be the low side design pressure and the minimum test pressure for the high side of the system shall be the high side design pressure, unless the high side of the system cannot be isolated from the low side of the system in which case the entire system shall be pressure tested to the low side design pressure.
     b. The test pressure after removal of pressure source shall be maintained for at least 1 h with no decrease of pressure indicated by the test gauge, with test gauge resolution not exceeding 5% of the test pressure.
     c. During the evacuation test, after achieving a vacuum level specified in the manual or less, the refrigeration system shall be isolated from the vacuum pump and the pressure shall not rise above 1500 microns within 10 min. The vacuum pressure level shall be specified in the manual, and shall be the lessor of 500 microns or the value required for compliance with national and local codes and standards, which may vary between residential, commercial, and industrial buildings.
   - field-made refrigerant joints indoors shall be tightness tested according to the following requirements: The test method shall have a sensitivity of 5 grams per year of refrigerant or better under a pressure of at least 0.25 times the maximum allowable pressure. No leak shall be detected.

3. Qualification of Workers

   Any maintenance, service and repair operations must be required qualification of the working personnel. Every working procedure that affects safety means shall only be carried out by competent persons that joined the training and achieved competence should be documented by a certificate. The training of these procedures is carried out by national training organizations or manufacturers that are accredited to teach the relevant national competency standards that may be set in legislation. All training shall follow the ANNEX HH requirements of UL 60335-2-40 4th Edition.
   Examples for such working procedures are:
   • breaking into the refrigerating circuit;
   • opening of sealed components;
   • opening of ventilated enclosures.

4. Checks to the area

   Prior to beginning work on systems containing flammable refrigerants, safety checks are necessary to ensure that the risk of ignition is minimized. For repair to the refrigerating system, the following precautions shall be complied with prior to conducting work on the system.

5. Work procedure

   Works shall be undertaken under a controlled procedure so as to minimize the risk of a flammable gas or vapor being present while the work is being performed.

6. General work area

   All maintenance staff and others working in the local area shall be instructed on the nature of work being carried out. work in confined spaces shall be avoided.

7. Checking for presence of refrigerant

   The area shall be checked with an appropriate refrigerant detector prior to and during work, to ensure the technician is aware of potentially flammable atmospheres. Ensure that the leak detection equipment being used is suitable for use with flammable refrigerants, i.e. no sparking, adequately sealed or intrinsically safe.

8. Presence of fire extinguisher

   If any hot work is to be conducted on the refrigeration equipment or any associated parts, appropriate fire extinguishing equipment shall be available to hand. Have a dry power or CO2 fire extinguisher adjacent to the charging area.

9. No ignition sources

   No person carrying out work in relation to a REFRIGERATING SYSTEM which involves exposing any pipe work shall use any sources of ignition in such a manner that it may lead to the risk of fire or explosion. All possible ignition sources, including cigarette smoking, should be kept sufficiently far away from the site of installation, repairing, removing and disposal, during which refrigerant can possibly be released to the surrounding space. Prior to work taking place, the area around the equipment is to be surveyed to make sure that there are no flammable hazards or ignition risks. "No Smoking" signs shall be displayed.

10. Ventilated area

    Ensure that the area is in the open or that it adequately ventilated before breaking into the system or conducting any hot work. A degree of ventilation shall continue during the period that the work is carried out. The ventilation should safely disperse any released refrigerant and preferably expel it externally into the atmosphere.

11. Checks to the refrigeration equipment

    Where electrical components are being changed, they shall be fit for the purpose and to the correct specification. At all times the manufacturer's maintenance and service guidelines shall be followed. If in doubt consult the manufacturer's technical department for assistance. The following checks shall be applied to installations using FLAMMABLE REFRIGERANTS:

    a. the actual refrigerant charge is in accordance with the room size within which the refrigerant containing parts are installed;
    b. the ventilation machinery and outlets are operating adequately and are not obstructed;
    c. if an indirect refrigerating circuit is being used, the secondary circuits shall be checked for the presence of refrigerant; marking to the equipment continues to be visible and legible, marking and signs that are illegible shall be corrected;
    d. refrigeration pipe or components are installed in a position where they are unlikely to be exposed to any substance which may corrode refrigerant containing components, unless the components are constructed of materials which are inherently resistant to being corroded or are suitably protected against being so corroded.

12. Checks to electrical devices

    Repair and maintenance to electrical components shall include initial safety checks and component inspection procedures. If a fault exists that could compromise safety, then no electrical supply shall be connected to the circuit until it is satisfactorily dealt with. If the fault cannot be corrected immediately but it is necessary to continue operation, and adequate temporary solution shall be used. This shall be reported to the owner of the equipment so all parties are advised. **Initial safety checks shall include:**
    - that capacitors are discharged: this shall be done in a safe manner to avoid possibility of sparking
    - that there no live electrical components and wiring are exposed while charging,
    - recovering or purging the system; that there is continuity of earth bonding.

13. Wiring

    Check that wiring will not be subject to wear, corrosion, excessive pressure, vibration, sharp edges or any other adverse environmental affects. The check shall also take into account the affects of aging or continual vibration from sources such as compressors or fans.

14. Detection of flammable refrigerants

    Under no circumstances shall potential sources of ignition be used in the searching for or detection of refrigerant leaks. A halide torch (or any other detector using a naked flame) shall not be used. The following leak detection methods are deemed acceptable for refrigerant systems. Electronic leak detectors may be used to detect refrigerant leaks but, in the case of FLAMMABLE REFRIGERANTS, the sensitivity may not be adequate, or may need re-calibration. (Detection equipment shall be calibrated in a refrigerant free area.) Ensure that the detector is not a potential source of ignition and is suitable for the refrigerant used. Leak detection equipment shall be set at a percentage of the LFL of the refrigerant and shall be calibrated to the refrigerant employed, and the appropriate percentage of gas (25 % maximum) is confirmed. Leak detection fluids are also suitable for use with most refrigerants but the use of detergents containing chlorine shall be avoided as the chlorine may react with the refrigerant and corrode the copper pipe-work.

**NOTE: Examples of leak detection fluids are: bubble method:**

**If a leak is suspected, all naked flames shall be removed/extinguished. If a leakage of refrigerant is found which requires brazing, all of the refrigerant shall be recovered from the system, or isolated (by means of shut off valves) in a part of the system remote from the leak. See the following instructions of removal of refrigerant**.

15. Removal and Evacuation

When breaking into the refrigerant circuit to make repairs - or for any other purpose conventional procedures shall be used. However, for flammable refrigerants it is important that best practice be followed, since flammability is a consideration.
The following procedure shall be adhered to:

- safely remove refrigerant following local and national regulations;
- evacuate;
- purge the circuit with inert gas (optional for A2L);
- evacuate (optional for A2L);
- continuously flush or purge with inert gas when using flame to open circuit; and
- open the circuit.

The refrigerant charge shall be recovered into the correct recovery cylinders if venting is not allowed by local and national codes. For appliances containing flammable refrigerants, the system shall be purged with oxygen-free nitrogen to render the appliance safe for flammable refrigerants. This process might need to be repeated several times. Compressed air or oxygen shall not be used for purging refrigerant systems.

For appliances containing flammable refrigerants, refrigerants purging shall be achieved by breaking the vacuum in the system with oxygen-free nitrogen and continuing to fill until the working pressure is achieved, then venting to atmosphere, and finally pulling down to a vacuum (optional for A2L). This process shall be repeated until no refrigerant is within the system (optional for A2L). When the final oxygen-free nitrogen charge is used, the system shall be vented down to atmospheric pressure to enable work to take place. The outlet for the vacuum pump shall not be close to any potential ignition sources, and ventilation shall be available.

16. Charging procedures

In addition to conventional charging procedures, the following requirements shall be followed:
Works shall be undertaken with appropriate tools only (In case of uncertainty, please consult the manufacturer of the tools for use with flammable refrigerants). Ensure that contamination of different refrigerants does not occur when using charging equipment. Hoses or lines shall be as short as possible to minimize the amount of refrigerant contained in them.
Cylinders shall be kept upright.
Ensure that the refrigeration system is earthed prior to charging the system with refrigerant.
Label the system when charging is complete (if not already).
Extreme care shall be taken not to overfill the refrigeration system.
Prior to recharging the system it shall be pressure tested with oxygen free nitrogen (OFN). The system shall be leak tested on completion of charging but prior to commissioning. A follow up leak test shall be carried out prior to leaving the site.

17. Decommissioning

Before carrying out this procedure, it is essential that the technician is completely familiar with the equipment and all its detail. It is recommended good practice that all refrigerants are recovered safely. Prior to the task being carried out, an oil and refrigerant sample shall be taken in case analysis is required prior to re-use of recovered refrigerant. It is essential that electrical power is available before the task is commenced.

a. Become familiar with the equipment and its operation.
b. Isolate system electrically
c. Before attempting the procedure ensure that:
mechanical handling equipment is available, if required, for handling refrigerant cylinders;
all personal protective equipment is available and being used correctly;

- the recovery process is supervised at all times by a competent person;
- recovery equipment and cylinders conform to the appropriate standards.

d. Pump down refrigerant system, if possible.
e. If a vacuum is not possible, make a manifold so that refrigerant can be removed from various parts of the system.
f. Make sure that cylinder is situated on the scales before recovery takes place.
g. Start the recovery machine and operate in accordance with instructions.
h. Do not overfill cylinders (no more than 80 % volume liquid charge)
i. Do not exceed the maximum working pressure of the cylinder, even temporarily.
j. When the cylinders have been filled correctly and the process completed, make sure that the cylinders and the equipment are removed from site promptly and all isolation valves on the equipment are closed off.
k. Recovered refrigerant shall not be charged into another refrigeration system unless it has been cleaned and checked.

18. Labeling

Equipment shall be labeled stating that it has been de-commissioned and emptied of refrigerant. The label shall be dated and signed. For appliances containing FLAMMABLE REFRIGERANTS, ensure that there are labels on the equipment stating the equipment contains FLAMMABLE REFRIGERANT.

19. Recovery

When removing refrigerant from a system, either for servicing or decommissioning, it is recommended good practice that all refrigerants are removed safely.When transferring refrigerant into cylinders, ensure that only appropriate refrigerant recovery cylinders are employed. Ensure that the correct number of cylinders for holding the total system charge is available. All cylinders to be used are designated for the recovered refrigerant and labeled for that refrigerant (i. e. special cylinders for the recovery of refrigerant). Cylinders shall be complete with pressure-relief valve and associated shut-o valves in good working order. Empty recovery cylinders are evacuated and, if possible, cooled before recovery occurs.
The recovery equipment shall be in good working order with a set of instructions concerning the equipment that is at hand and shall be suitable for the recovery of the flammable refrigerant. If in doubt, the manufacturer should be consulted. In addition, a set of calibrated weighing scales shall be available and in good working order. Hoses shall be complete with leak-free disconnect couplings and in good condition.
The recovered refrigerant shall be processed according to local legislation in the correct recovery cylinder, and the relevant waste transfer note arranged. Do not mix refrigerants in recovery units and especially not in cylinders. If compressors or compressor oils are to be removed, ensure that they have been evacuated to an acceptable level to make certain that flammable refrigerant does not remain within the lubricant. The compressor body shall not be heated by an open flame or other ignition sources to accelerate this process. When oil is drained from a system, it shall be carried out safely.

20. Unventilated areas

For appliances containing more than for any refrigerating circuit, the manual shall include a statement advising that an unventilated area where the appliance using FLAMMABLE REFRIGERANTS is installed shall be so constructed that should any refrigerant leak, it will not stagnate so as to create a fire or explosion hazard. This shall include:
- a warning that if appliances with A2L REFRIGERANTS connected via an air duct system to one or more rooms are installed in a room with an area less than >Amin as determined in Clause GG.2, that room shall be without continuously operating open flames (for example an operating gas appliance) or other POTENTIAL IGNITION SOURCES (for example an operating electric heater, hot surfaces). A flame-producing device may be installed in the same space if the device is provided with an effective flame arrest;
- for appliances using A2L REFRIGERANTS connected via an air duct system to one or more rooms, a warning with the substance of the following: “Auxiliary devices which may be a POTENTIAL IGNITION SOURCE shall not be installed in the duct work. Examples of such POTENTIAL IGNITION SOURCES are hot surfaces with a temperature exceeding X °C and electric switching devices”. NOTE X is the maximum allowable surface temperature as defined in 22.117.
The manufacturer should specify other potential continuously operating sources known to cause ignition of the refrigerant used. The appliance shall be stored so as to prevent mechanical damage from occurring.

- for appliances using A2L refrigerants connected via an air duct system to one or more rooms, a warning that only auxiliary devices approved by the appliance manufacturer or declared suitable with the refrigerant shall be installed in connecting ductwork. The manufacturer shall list in the instructions all approved auxiliary devices by manufacturer and model number for use with the specific appliance, if those devices have a potential to become an ignition source.
- a warning that if appliances connected via an air duct system to one or more rooms with A2L REFRIGERANTS are installed in a room with an area less than 4min as determined in Clause GG.2. or installed in a room with an EFFECTIVE DISPERSAL VOLUME VED less than the minimum as determined by Clause 101.DVN.8, that room shall be without continuously operating open flames (e.g. an operating gas appliance) or other POTENTIAL IGNITION SOURCES (for e.g. an operating electric heater, hot surfaces). A flame-producing device may be installed in the same space if the device is provided with an effective flame arrest.
- for REFRIGERANT DETECTION SYSTEMS, the function and operation and required servicing measures;
- for LIMITED LIFE REFRIGERANT SENSORS Used in REFRIGERANT DETECTION SYSTEMS, the specified end-of-life and replacement instructions;
- REFRIGERANT SENSORS for REFRIGERANT DETECTION SYSTEMS Shall Only be replaced with sensors specified by the appliance manufacture; and instructions to verify actuation of mitigation actions per Annex GG or Annex 101.DVN as applicable.

For appliances using FLAMMABLE REFRIGERANTS with safety features that depend upon the proper function of a leak detection system used for leak mitigation, the instructions and unit markings shall contain the substance of the following: "LEAK DETECTION SYSTEM installed. Unit must be powered except for service.” If any remote located REFRIGERANT SENSOR is employed to detect leaked refrigerant, such a remote located REFRIGERANT SENSOR shall also apply to this marking or be accompanied by such instructions.

21. Transportation, marking and storage for units that employ flammable refrigerants
    a. General: The following information is provided for units that employ FLAMMABLE REFRIGERANTS.
    b. Transport of equipment containing flammable refrigerants. Attention is drawn to the fact that additional transportation regulations may exist with respect to equipment containing flammable gas. The maximum number of pieces of equipment or the configuration of the equipment permitted to be transported together will be determined by the applicable transport regulations.
    c. Marking of equipment using signs. Signs for similar appliances used in a work area are generally addressed by local regulations and give the minimum requirements for the provision of safety and/or health signs for a work location. All required signs are to be maintained and employers should ensure that employees receive suitable and sufficient instruction and training on the meaning of appropriate safety signs and the actions that need to be taken in connection with these signs. The effectiveness of signs should not be diminished by too many signs being placed together. Any pictograms used should be as simple as possible and contain only essential details.
    d. Disposal of equipment using flammable refrigerants. See national regulations.
    e. Storage of equipment/appliances. The storage of the appliance should be in accordance with the applicable regulations or instructions, whichever is more stringent.
    f. Storage of packed (unsold) equipment. Storage package protection should be constructed in such a way that mechanical damage to the equipment inside the package will not cause a leak of the REFRIGERANT CHARGE. The maximum number of pieces of equipment permitted to be stored together will be determined by local regulations.

# PRODUCT INSTALLATION WARNINGS

- Turn off the air conditioner and disconnect the power before performing any installation or repairing. Failure to do so can cause electric shock.
- Installation must be performed by an authorized dealer or specialist. Defective installation can cause water leakage, electrical shock, or fire.
- Installation must be performed according to the installation instructions.
- Improper installation can cause water leakage, electrical shock, or fire. Contact an authorized service technician for repair or maintenance of this unit.
- This appliance shall be installed in accordance with national wiring regulations.
- Only use the included accessories, parts, and specified parts for installation.
- Using non-standard parts can cause water leakage, electrical shock, fire, and can cause the unit to fail.
- Install the unit in a firm location that can support the unit’s weight. If the chosen location cannot support the unit’s weight, or the installation is not done properly, the unit may drop and cause serious injury and damage.
- Install drainage piping according to the instructions in this manual. Improper drainage may cause water damage to your home and property.
- For units that have an auxiliary electric heater, do not install the unit within 1 meter (3 feet) of any combustible materials.
- For the units that have a wireless network function, the USB device access, replacement, maintenance operations must be carried out by professional staff.
- Do not install the unit in a location that may be exposed to combustible gas leaks. If combustible gas accumulates around the unit, it may cause fire.
- Do not turn on the power until all work has been completed.
- When moving or relocating the air conditioner, consult experienced service technicians for disconnection and re-installation of the unit.
- How to install the appliance to its support, please read the information for details in “indoor unit installation” and “outdoor unit installation” sections.

## TAKE NOTE OF FUSE SPECIFICATIONS

The air conditioner’s circuit board (PCB) is designed with a fuse to provide overcurrent protection. The specifications of the fuse are printed on the circuit board, for example: T3.15AL/250VAC, T5AL/250VAC, T3.15A/250VAC, T5A/250VAC, T20A/250VAC, T30A/250VAC,etc.
NOTE: Only the blast-proof ceramic fuse can be used.

## CLEANING AND MAINTENANCE WARNINGS

- Turn off the device and disconnect the power before cleaning. Failure to do so can cause electrical shock.
- **Do not** clean the air conditioner with excessive amounts of water.
- **Do not** clean the air conditioner with combustible cleaning agents. Combustible cleaning agents can cause fire or deformation.

## FLAMMABLE REFRIGERANT USE WARNINGS

1. Installation (Space)

   - That the installation of pipe-work shall be kept to a minimum.
   - That pipe-work shall be protected from physical damage.
   - Where refrigerant pipes shall be compliance with national gas regulations.
   - That mechanical connections shall be accessible for maintenance purposes.
   - In cases that require mechanical ventilation, ventilation openings shall be kept clear of obstruction.
   - When disposing of the product is used, be based on national regulations, properly processed.

2. Servicing

   - Any person who is involved with working on or breaking into a refrigerant circuit should hold a current valid certificate from an industry-accredited assessment authority, which authorizes their competence to handle refrigerants
   safely in accordance with an industry recognized assessment specification.

3. Maintenance and repair requiring the assistance of other skilled personnel shall be carried out under the supervision of the person competent in the use of flammable refrigerants.
4. Do not use means to accelerate the defrosting process or to clean, other than those recommended by the manufacturer.
5. The appliance shall be stored in a room without continuously operating ignition sources (for example: open flames, an operating gas appliance or an operating electric heater).
6. Be more careful that foreign matter (oil, water, etc) does not enter the piping. Also, when storing the piping, securely seal the opening by pinching, taping, etc.
7. Do not pierce or burn.
8. Be aware that refrigerants may not contain an odor.
9. All working procedure that affects safety means shall only be carried by competent persons.
10. Appliance shall be stored in a well -ventilated area where the room size corresponds to the room area as specific for operation.
11. The appliance shall be stored so as to prevent mechanical damage from occurring.
12. Joints shall be tested with detection equipment with a capability of 5 g/year of refrigerant or better, with the equipment in standstill and under operation or under a pressure of at least these standstill or operation conditions after installation. Detachable joints shall **NOT** be used in the indoor side of the unit (brazed, welded joint could be used).

**NOTE: FUSE SPCIFICATIONS**

**The air conditioner's circuit board (PCB) may be designed with a fuse to provide overcurrent protection. This fuse must be replaces with identical component. The specifications of the fuse, if equipped, are printed on the circuit board, examples of such are T5A/250VAC and T10A/250VAC.**

**NOTE: FLUORINATED GASES (NOT APPLICABLE TO THE UNIT USING R290 REFRIGERANT)**

**This air-conditioning unit contains fluorinated greenhouse gases. For specific information on the type of gas and the amount, please refer to the relevant label on the unit itself or the "Owner's Manual - Product Fiche" in the packaging of the outdoor unit.**

**Installation, service, maintenance and repair of this unit must be performed by a certified technician. Product un-installation and recycling must be performed by a certified technician. When the unit is checked for leaks, proper record-keeping of all checks is strongly recommended**.

The allowed static pressure range of the air conditioner on site is 0-0.80 in.wc.(0-200 Pa). The data below represents the static pressures at full required air flow used for AHRI testing.

**Table 2 — Static Pressure Range**

| MODEL | 18K-24K | 30K-36K | 48K-60K |
|---|---|---|---|
| PRESSURE (After January 1, 2023) | 0.5 in.wc.(125Pa) | | |

**NOTE: The maximum functional total external static pressure can not exceed 0.80 in.wc. or 200 Pa. The airflow reduces significantly beyond 0.80 in.wc. or 200Pa. System design should allow for the increased resistance of filters as they become dirty.**

## Room Size Restriction

The appliances are connected via an air duct system to one or more rooms, the bottom of the air outlet of the air duct in the room should be at a height.7.3ft/2.2m from the floor. In UL/CSA 60335-2-40, the R454B refrigerant belongs to mildly flammable refrigerants, which will limit the room area of the system service. Similarly, the total amount of refrigerant in the system should be less than or equal to the maximum allowable refrigerant charge, which depends on the room area serviced by the system.

**NOTE:**

The nouns in this section are explained as follows:

- Mc: The actual refrigerant charge in the system.
- A: the actual room area where the appliance is installed.
- Amin: The required minimum room area.
- Mmax: The allowable maximum refrigerant charge in a room.
- Qmin: The minimum circulation airflow.
- Anvmin The minimum opening area for connected rooms.
- TAmin: The total area of the conditioned space (For appliances serving one or more rooms with an air duct system).
- TA: The total area of the conditioned space connected by air ducts.

## Refrigerant Charge and Room Area Limitations

For the purpose of determination of room area (A) when used to calculate the maximum allowable refrigerant charge (Mmax) in an unventilated space, the following shall apply.
The room area (A) shall be defined as the room area enclosed by the projection to the floor of the walls, partitions and doors of the space in which the appliance is installed.
Spaces connected by only drop ceilings, ductwork, or similar connections shall not be considered a single space.
For units mounted higher than 6.0ft/1.8m, spaces divided by partition walls which are no higher than 5.3ft/1.6m shall be considered a single space.

For fixed appliances, rooms on the same floor and connected by an open passageway between the spaces can be considered a single room when determining compliance to Amin, if the passageway complies with all of the following.

- It is a permanent opening.
- It extends to the floor.
- It is intended for people to walk through.

For fixed appliances, the area of the adjacent rooms, on the same floor, connected by permanent opening in the walls and/or doors between occupied spaces, including gaps between the wall and the floor, can be considered a single room when determining compliance to Amin, provided all of the following are met.

- The space shall have appropriate openings according to Sec.2.
- The minimum opening area for natural ventilation Anvmin shall not be less than listed in Table 3.

**Table 3 — Opening Area**

| HEIGHT OF OUTLET, FT (M) | A, $FT^2$ ($M^2$) | MC, LB (KG) | MAX, LB (KG) | ANVMIN, $FT^2$ ($M^2$) |
|---|---|---|---|---|
| 7.2 (2.2) | 53.8 (5) | 11.0 (5.0) | 5.9 (2.7) | 0.48 (0.045) |
| | 64.5 (6) | | 6.4 (2.9) | 0.45 (0.042) |
| | 75.3 (7) | | 7.0 (3.2) | 0.41 (0.038) |
| | 86.1 (8) | | 7.5 (3.4) | 0.38 (0.035) |
| | 96.9 (9) | | 7.9 (3.6) | 0.33 (0.031) |
| | 107.6 (10) | | 8.4 (3.8) | 0.30 (0.028) |
| | 118.4 (11) | | 8.6 (3.9) | 0.26 (0.024) |
| | 129.2 (12) | | 9.3 (4.2) | 0.21 (0.020) |
| | 139.9 (13) | | 9.5 (4.3) | 0.17 (0.016) |
| | 150.7 (14) | | 9.9 (4.5) | 0.14 (0.013) |
| | 161.5 (15) | | 10.1 (4.6) | 0.10 (0.009) |
| | 172.2 (16) | | 10.6 (4.8) | 0.05 (0.005) |
| | 183 (17) | | 10.8 (4.9) | 0.01 (0.001) |

**NOTE: Take the Mc = 11 lb (5 kg) as an example. For appliances serving one or more rooms with an air duct system, the room area calculation shall be determined based on the total area of the conditioned space (TA) connected by ducts taking into consideration that the circulating airflow distributed to all the rooms by the appliance integral indoor fan will mix and dilute the leaking refrigerant before entering any room.**

## Opening Conditions for Connected Rooms

When the openings for connected rooms are required, the following conditions shall be applied.

- The area of any openings above 1ft. (300mm) from the floor shall not be considered in determining compliance with Anvmin.
- At least 50% of the required opening area Anvmin shall be below .66ft. (200mm) from the floor.
- The bottom of the lowest openings shall not be higher than the point of release when the unit is installed and not more than 33ft. (100mm) from the floor.
- Openings are permanent openings which cannot be closed.
  - For openings extending to the floor the height shall not be less than 20mm above the surface of the floor covering
- A second higher opening shall be provided. The total size of the second opening shall not be less than 50% of minimum opening area for Anvmin and shall be at least 4.9ft. (1.5 m) above the floor.

**NOTE: The requirement for the second opening can be met by drop ceilings, ventilation ducts, or similar arrangements that provide an airflow path between the connected rooms.**

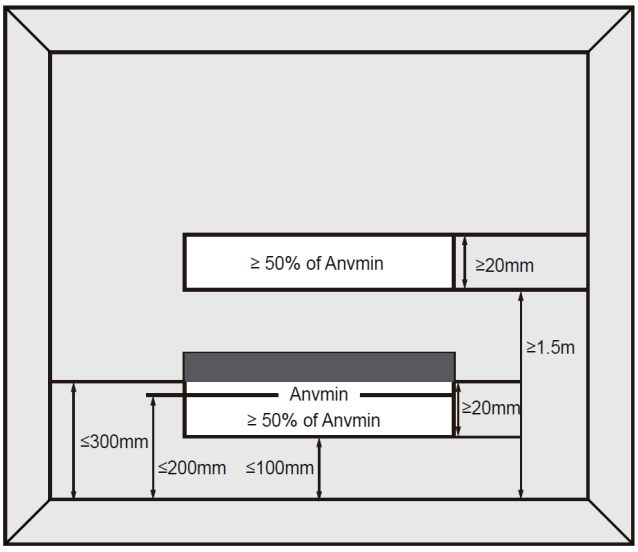


**Fig. 2 — AnvMin**

- The room into which refrigerant can leak, plus the connected adjacent room(s) shall have a total area of not less than TAmin.
- The room area in which the unit is installed shall be not less than 20% TAmin.

## R454B Refrigerant Charge Amount and Minimum Room Area

The machine you purchased may be one of the types in the table below. The indoor and outdoor units are designed to be used together. Check the unit you purchased. The minimum room area of operating or storage should be as specified in Table 5.

**Table 4 — Coil Dimensions**

| INDOOR UNIT | COIL DIMENSIONS | COIL SHAPE |
|---|---|---|
| 45MULAQ24XAX | 14.5“x21"x18 | A-Coil |
| 45MULAQ24XBX | 17.5“x21"x18" | A-Coil |
| 45MULAQ36XAX | 14.5"x21"x24" | A-Coil |
| 45MULAQ36XBX | 17.5"x21"x24" | A-Coil |
| 45MULAQ36XCX | 21"x21"x24" | A-Coil |
| 45MULAQ60XMX | 21"x21"x28" | M-Coil |
| 45MULAQ60XDX | 24.5"x21"x28" | A-Coil |

)

**Table 5 – A (min)**

| | | Ho, release height ft (m) | | | | | |
|---|---|---|---|---|---|---|---|
| MC or Mrel Refrigerant Charge Amount pounds (kilograms) | **Mc or Mrel (lbs (kgs)** | **≤ 7.2 (2.2)** | **7.5 (2.3)** | **7.9 (2.4)** | **8.5 (2.6)** | **9.2 (2.8)** | **9.8 (3.0)** |
| | ≤ 3.91 (1.776) | 12 (1.10) | | | | | |
| | 4.0 (1.8) | 60 (5.53) | 57 (5.29) | 55 (5.07) | 50 (4.68) | 47 (4.34) | 44 (4.05) |
| | 4.4 (2.0) | 66 (6.14) | 63 (5.88) | 61 (5.63) | 56 (5.2) | 52 (4.83) | 48 (4.5) |
| | 4.9 (2.2) | 73 (6.76) | 70 (6.46) | 67 (6.19) | 62 (5.72) | 57 (5.31) | 53 (4.95) |
| | 5.3 (2.4) | 79 (7.37) | 76 (7.05) | 73 (6.76) | 67 (6.24) | 62 (5.79) | 58 (5.41) |
| | 5.7 (2.6) | 86 (7.99) | 82 (7.64) | 79 (7.32) | 73 (6.76) | 68 (6.27) | 63 (5.86) |
| | 6.2 (2.8) | 93 (8.6) | 89 (8.23) | 85 (7.88) | 78 (7.28) | 73 (6.76) | 68 (6.31) |
| | 6.6 (3.0) | 99 (9.21) | 95 (8.81) | 91 (8.45) | 84 (7.8) | 78 (7.24) | 73 (6.76) |
| | 7.1 (3.2) | 106 (9.83) | 101 (9.4) | 97 (9.01) | 90 (8.32) | 83 (7.72) | 78 (7.21) |
| | 7.5 (3.4) | 112 (10.44) | 108 (9.99) | 103 (9.57) | 95 (8.84) | 88 (8.2) | 82 (7.66) |
| | 7.9 (3.6) | 119 (11.06) | 114 (10.58) | 109 (10.14) | 101 (9.36) | 94 (8.69) | 87 (8.11) |
| | 8.4 (3.8) | 126 (11.67) | 120 (11.16) | 115 (10.7) | 106 (9.88) | 99 (9.17) | 92 (8.56) |
| | 8.8 (4.0) | 132 (12.29) | 126 (11.75) | 121 (11.26) | 112 (10.4) | 104 (9.65) | 97 (9.01) |
| | 9.3 (4.2) | 139 (12.9) | 133 (12.34) | 127 (11.82) | 117 (10.91) | 109 (10.14) | 102 (9.46) |
| | 9.7 (4.4) | 145 (13.51) | 139 (12.93) | 133 (12.39) | 123 (11.43) | 114 (10.62) | 107 (9.91) |
| | 10.1 (4.6) | 152 (14.13) | 145 (13.51) | 139 (12.95) | 129 (11.95) | 119 (11.1) | 112 (10.36) |
| | 10.6 (4.8) | 159 (14.74) | 152 (14.1) | 145 (13.51) | 134 (12.47) | 125 (11.58) | 116 (10.81) |
| | 11 (5.0) | 165 (15.36) | 158 (14.69) | 152 (14.08) | 140 (12.99) | 130 (12.07) | 121 (11.26) |
| | 11.5 (5.2) | 172 (15.97) | 164 (15.28) | 158 (14.64) | 145 (13.51) | 135 (12.55) | 126 (11.71) |
| | 11.9 (5.4) | 179 (16.58) | 171 (15.86) | 164 (15.2) | 151 (14.03) | 140 (13.03) | 131 (12.16) |
| | 12.3 (5.6) | 185 (17.2) | 177 (16.45) | 170 (15.77) | 157 (14.55) | 145 (13.51) | 136 (12.61) |
| | 12.8 (5.8) | 192 (17.81) | 183 (17.04) | 176 (16.33) | 162 (15.07) | 151 (14) | 141 (13.06) |
| | 13.2 (6.0) | 198 (18.43) | 190 (17.63) | 182 (16.89) | 168 (15.59) | 156 (14.48) | 145 (13.51) |
| | 13.7 (6.2) | 205 (19.04) | 196 (18.21) | 188 (17.45) | 173 (16.11) | 161 (14.96) | 150 (13.96) |
| | 14.1 (6.4) | 212 (19.66) | 202 (18.8) | 194 (18.02) | 179 (16.63) | 166 (15.44) | 155 (14.41) |
| | 14.6 (6.6) | 218 (20.27) | 209 (19.39) | 200 (18.58) | 185 (17.15) | 171 (15.93) | 160 (14.86) |
| | 15 (6.8) | 225 (20.88) | 215 (19.98) | 206 (19.14) | 190 (17.67) | 177 (16.41) | 165 (15.32) |
| | 15.4 (7.0) | 231 (21.5) | 221 (20.56) | 212 (19.71) | 196 (18.19) | 182 (16.89) | 170 (15.77) |
| | 15.9 (7.2) | 238 (22.11) | 228 (21.15) | 218 (20.27) | 201 (18.71) | 187 (17.37) | 175 (16.22) |

**Amin (ft2 (m2))**
**Mc: Actual refrigerant charge in the system lbs (Kgs)**
**Mrel: Refrigerant releasable charge lbs (Kgs)**
**Ho: Release height, measured from duct opening, in ft (m)**
**Hinst: Height of install, from the bottom of the indoor appliance, measured in ft (m)**
**Ho≈ Hinst**
**Warning: Minimum room area of conditioned space is based on releasable charge or total system refrigerant charge.**

## For R454B refrigerant charge amount and minimum airflow:

Please check the furnace you purchased. The minimum airflow of operating or storage should be as specified in the following table.

**Table 6 – Refrigerant Charge Amount and Minimum Airflow**

| Mc lb (kg) | QHmin CFM ($m^3$/h) | Mc lb (kg) | QHmin CFM ($m^3$/h) | Mc lb (kg) | QHmin CFM ($m^3$/h) | Mc lb (kg) | QHmin CFM ($m^3$/h) | Mc lb (kg) | QHmin CFM ($m^3$/h) | Mc lb (kg) | QHmin CFM ($m^3$/h) |
|---|---|---|---|---|---|---|---|---|---|---|---|
| 3.09 (1.4) | 83.51 (141.89) | 6.16/ (3.0) | 178.96 (304.05) | 10.14/ (4.6) | 274.40 (466.22) | 13.67/ (6.2) | 369.85 (628.38) | 17.20/ (7.8) | 465.29 (790.54) | 20.72/ (9.4) | 560.74 (952.70) |
| 3.53/ (1.6) | 95.44 (162.16) | 7.05/ (3.2) | 190.89 (324.32) | 10.58/ (4.8) | 286.34 (486.49) | 14.11/ (6.4) | 381.78 (648.65) | 17.64/ (8.0) | 477.23 (810.81) | 21.16/ (9.6) | 572.67 (972.97) |
| 3.97/ (1.8) | 107.38 (182.43) | 7.50/ (3.4) | 202.82 (344.59) | 11.02/ (5.0) | 298.27 (506.76) | 14.55/ (6.6) | 393.71 (668.92) | 18.08/ (8.2) | 489.16 (831.08) | 21.61/ (9.8) | 584.60 (993.24) |
| 4.41/ (2) | 119.31 (202.70) | 7.94/ (3.6) | 214.75 (364.86) | 11.46/ (5.2) | 310.20 (527.03) | 14.99/ (6.8) | 405.64 (689.19) | 18.52/ (8.4) | 501.086 (851.35) | 22.05/ (10.0) | 596.53 (1013.51) |
| 4.85/ (2.2) | 131.24 (222.97) | 8.38/ (3.8) | 226.68 (385.14) | 11.90/ (5.4) | 322.13 (547.30) | 15.43/ (7.0) | 417.57 (709.46) | 18.96/ (8.6) | 513.02 (871.62) | 22.49/ (10.2) | 608.46 (1033.78) |
| 5.29/ (2.4) | 143.17 (243.24) | 8.82/ (4.0) | 238.61 (405.41) | 12.35/ (5.6) | 334.06 (567.57) | 15.87/ (7.2) | 429.50 (729.73) | 19.40/ (8.8) | 524.95 (891.89) | 22.93/ (10.4) | 620.39 (1054.05) |
| 5.73/ (2.6) | 155.10 (263.51) | 9.26/ (4.2) | 250.54 (425.68) | 12.79/ (5.8) | 345.99 (587.84) | 16.31/ (7.4) | 441.43 (750.00) | 19.84/ (9.0) | 536.88 (912.16) | 23.37/ (10.6) | 632.32 (1074.32) |
| 6.17/ (2.8) | 167.03 (283.78) | 9.70/ (4.4) | 262.47 (445.95) | 13.23/ (6.0) | 357.92 (608.19) | 16.76/ (7.6) | 453.36 (770.27) | 20.28/ (9.2) | 548.81 (932.43) | 23.81/ (10.8) | 644.25 (1094.59) |
| **Airflow Formula** | **QHmin** is the required minimum Airflow in $m^3$ /h<br>**Mc** is the actual refrigerant charge in the system in kg<br>**WARNING:** The minimum Airflow of conditioned space is based on releasable charge and total system refrigerant charge, and cooling full-load airflow not exceeding 400 scfm per specified ton of cooling. | | | | | | | | | | |

**IMPORTANT:** When these coils are applied with any furnace the furnace must have the ability to have blower failure detection, air flow verification. The blower feedback should activate within one minute to shut off the gas valve.
Cannot be used on any Ultra Low NOx (ULN) furnaces.

## Understanding installation airflow limitations

Install the coil in accordance with all national and local safety codes and the following airflow limits:

**Table 7 – Coil Airflow Limits**

| Model | Outdoor Unit (Ton) | Minimum CFM | Maximum CFM |
|---|---|---|---|
| 45MULAQ24XAX | 1- 1/2 | 525 | 600 |
| | 2 | 700 | 800 |
| 45MULAQ24XBX | 1- 1/2 | 525 | 600 |
| | 2 | 700 | 800 |
| 45MULAQ36XAX | 2-1/2 | 875 | 1000 |
| | 3 | 1050 | 1200 |
| 45MULAQ36XBX | 2-1/2 | 875 | 1000 |
| | 3 | 1050 | 1200 |
| 45MULAQ36XCX | 2-1/2 | 875 | 1000 |
| | 3 | 1050 | 1200 |
| 45MULAQ60XMX | 4 | 1400 | 1600 |
| | 5 | 1575 | 1800 |
| 45MULAQ60XDX | 4 | 1400 | 1600 |
| | 5 | 1575 | 1800 |

# ACCESSORIES

The system is shipped with the following accessories. Use all of the installation parts and accessories to install the system. Improper installation may result in water leakage, electrical shock and fire, or cause the equipment to fail. Keep the installation manual in a safe place and do not discard any other accessories until the installation has been completed.

**Table 8 — Accessories**

| NAME | APPEARANCE | QUANTITY | REMARKS |
|---|---|---|---|
| Manual | | 1 | |
| Coil Interface | | 1 | With separate package (Part on top of foam) |
| Wired Controller | 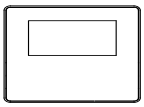 | 1 | With separate package |
| Wired Controller Screws | | 3 | M4*35 (For mounting on the wall), in the control box package |
| Coil Interface Screws | | 4 | M4*16, in the control box package |
| Wired Controller Anchors | | 3 | (For mounting on the wall), in the control box package |
| Room Temperature Sensor (T1) | | 1 | In the control box package |
| Room Temperature Sensor Extension Cable (T1)(5m) | 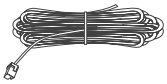 | 1 | In the control box package |
| Coil Sensor Clamp | | 1 | In the control box package |
| Cable ties | 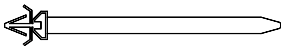 | 1 | In the control box package |

# INDOOR UNIT INSTALLATION

**NOTE: Install the indoor and outdoor units, cables and wires at least 3-1/5ft (1m) from televisions or radios to prevent static or image distortion. Depending on the appliances, a 3-1/5ft (1m) distance may not be sufficient. The Indoor unit must be electrically grounded per national and local electrical code.**

## Select the installation location for the indoor units

WARNING
DO NOT LOCATIONS:

DO NOT install the indoor unit in a moist environment. Excessive moisture can corrode the equipment, electrical components, and cause electrical shorts.

Areas with strong electromagnetic waves.

Coastal areas with high salt content in the air.

Areas with oil drilling or fracking.

Areas that store flammable materials or gas.

Areas where there may be detergent or other corrosive gases in the air, such as bathrooms, or laundry rooms.

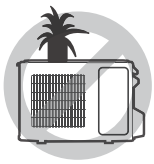

Areas where the air inlet and outlet may be obstructed.

Danger of explosion. Keep flammable materials and vapors, such as gasoline, away from air handler.

WARNING
MUST BE INSTALLED IN A LOCATION
THAT MEETS THE FOLLOWING REQUIREMENTS:

☑ Securely install the indoor unit on a structure that can support its weight. If the structure is too weak, the unit may fall and cause personal injury, unit and property damage, or death.

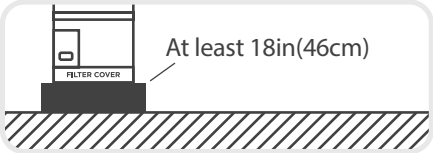


☑ Place air handler so that heating elements are at least 18 inches (46 cm) above the floor for a garage installation. Failure to follow these instructions can result in death, explosion, or fire.

☑ Enough room for installation and maintenance.

☑ Enough room for the connecting pipe and drainpipe.

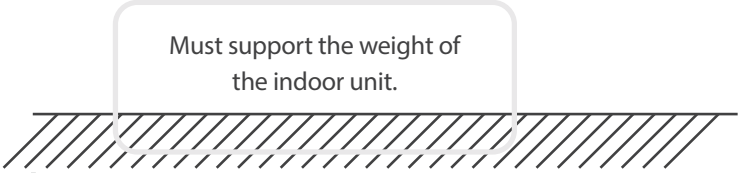


☑ The structure that the equipment is suspended from must support the weight of the indoor unit.

# SYSTEM INTRODUCTION

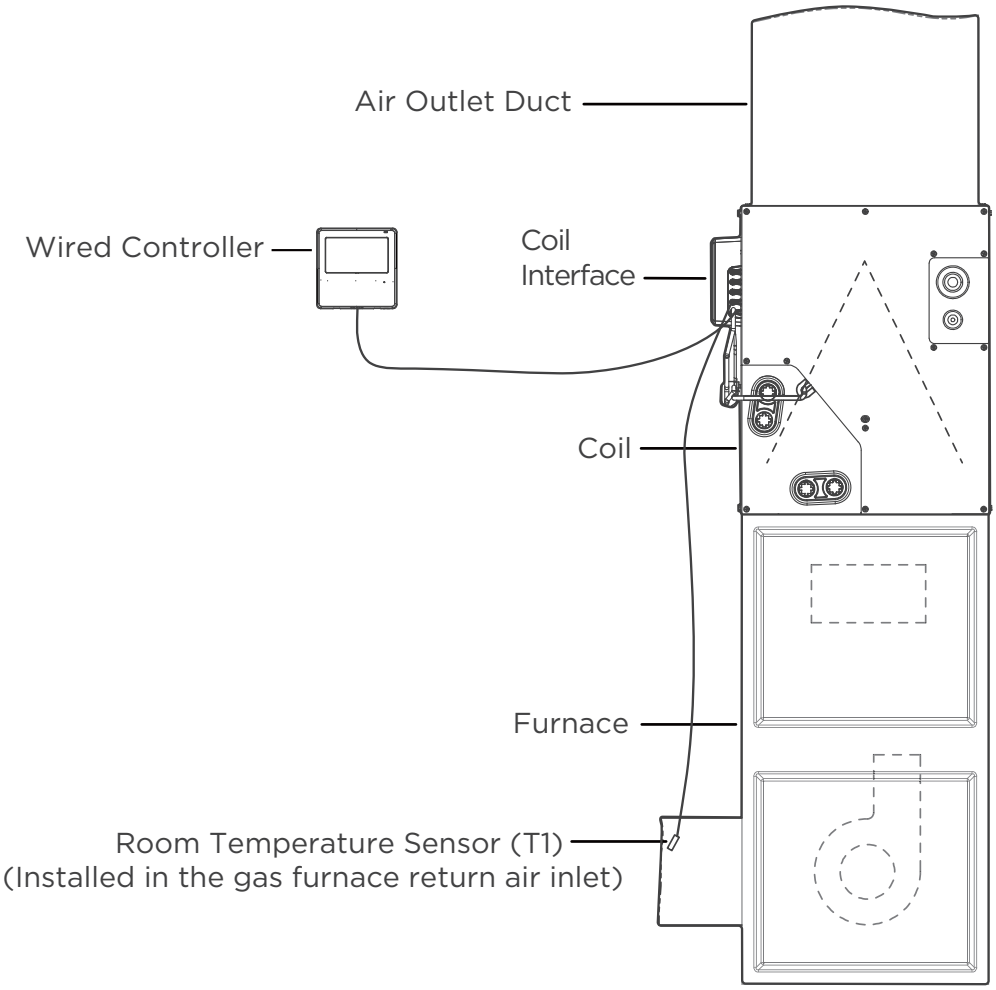


**Fig. 3 — Product Overview**

## Unit Dimensions

Unit: in(mm)

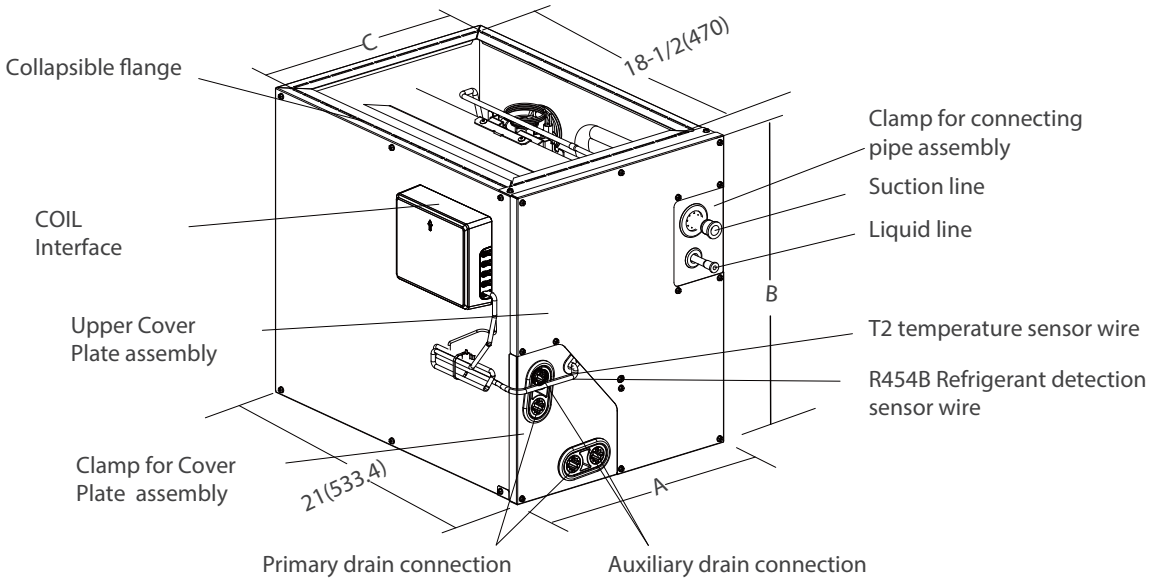


**Table 9 – Dimensions By Model**

| Model | 45MULAQ24XAX | | 45MULAQ36XAX | | 45MULAQ24XBX | |
|---|---|---|---|---|---|---|
| Dimensions | Inch | mm | Inch | mm | Inch | mm |
| A | 14-1/2 | 368 | 14-1/2 | 368 | 17-1/2 | 445 |
| B | 18 | 457 | 23-5/16 | 592 | 18 | 457 |
| C | 13-1/4 | 336 | 13-1/4 | 336 | 16-3/16 | 411 |
| **Model** | **45MULAQ36XBX** | | **45MULAQ36XCX** | | **45MULAQ60XDX** | |
| **Dimensions** | **Inch** | **mm** | **Inch** | **mm** | **Inch** | **mm** |
| A | 17-1/2 | 445 | 21 | 534 | 24-1/2 | 546 |
| B | 23-1/2 | 599 | 24 | 611 | 28 | 706 |
| C | 16-3/16 | 411 | 19-3/4 | 502 | 21-1/4 | 514 |

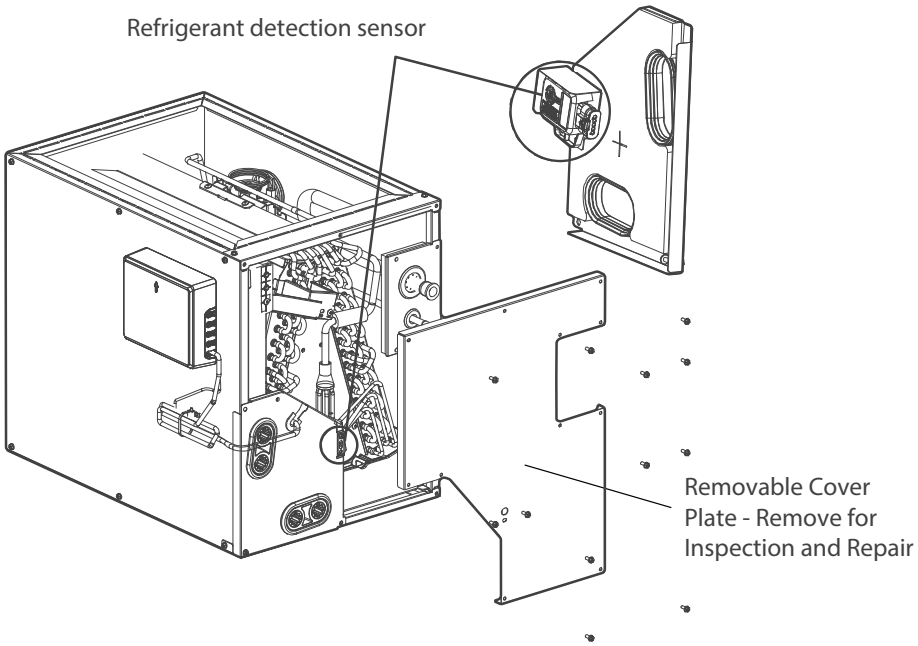


CASED DIMENSIONS AND COMPONENT LOCATION

**Fig. 4 – Refrigerant Detection Sensor Location**

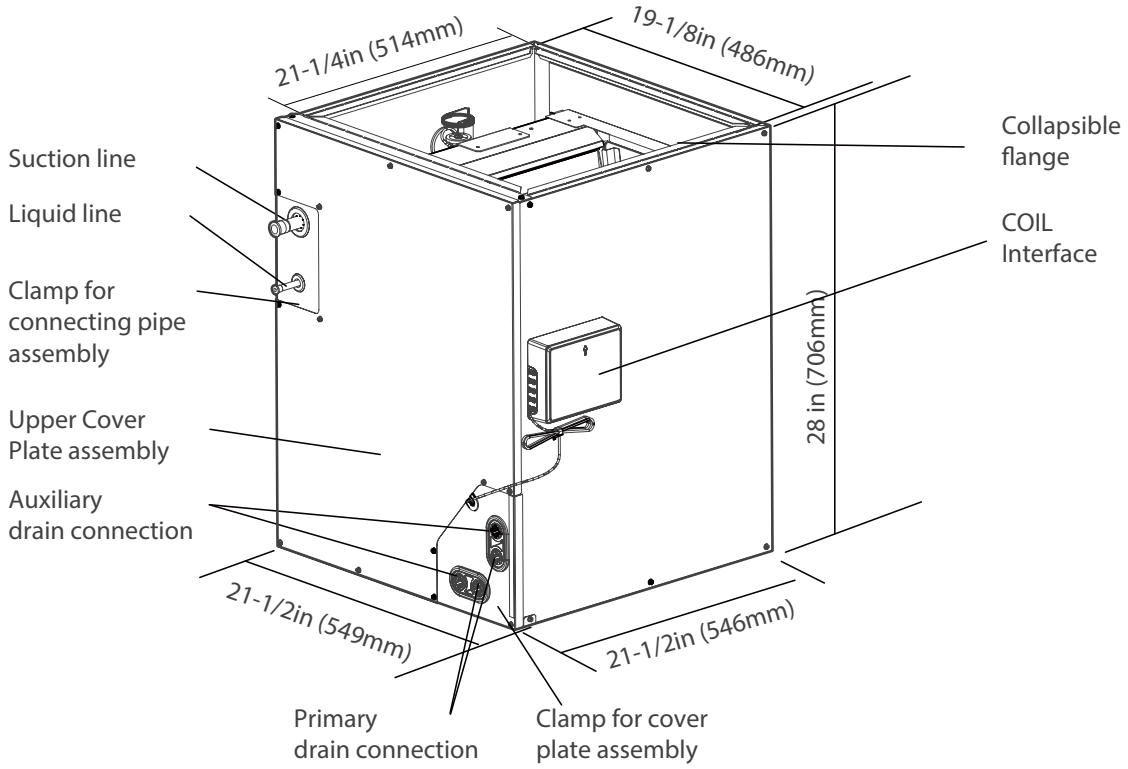


**Fig. 5 – Model 45MULAQ60XDX Dimensions**

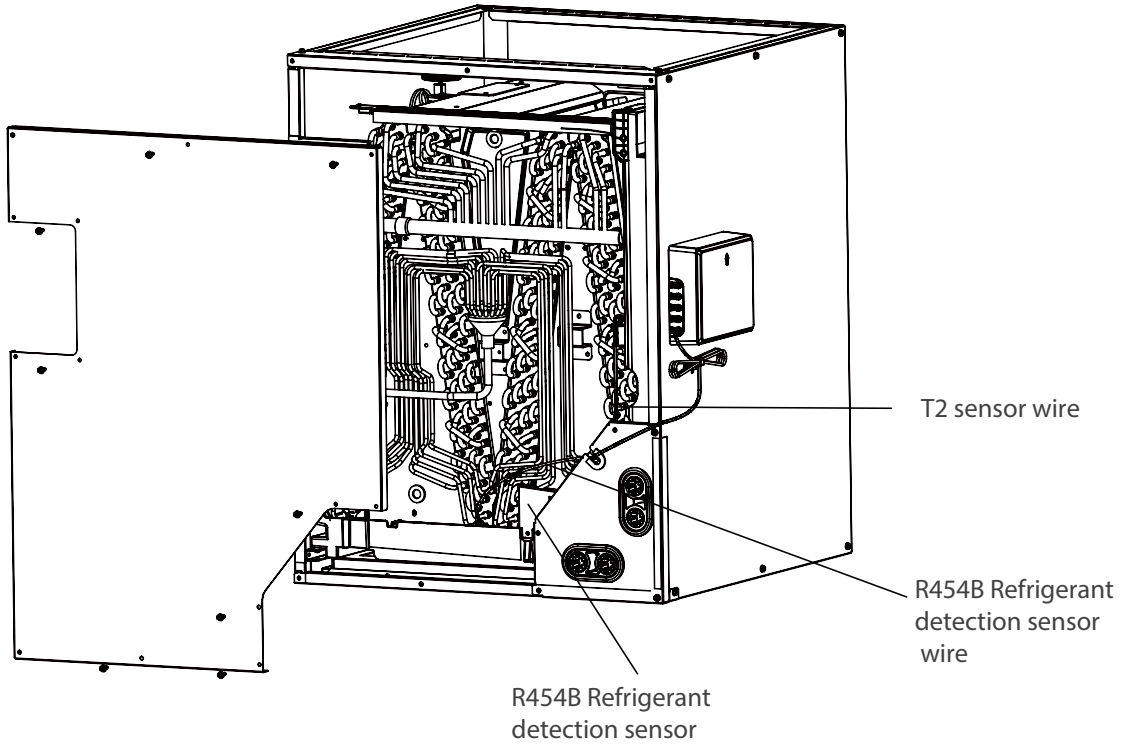


**Fig. 6 – R-454B Sensor Location**

## Codes and Regulations

This product is designed and manufactured to comply with national codes.

Installation in accordance with such codes and/or prevailing local codes/regulations is the responsibility of the installer. The manufacturer assumes no responsibility for equipment installed in violation of any codes or regulations.

The United States Environmental Protection Agency (EPA) has issued various regulations regarding the introduction and disposal of refrigerants. Failure to follow these regulations may harm the environment and can lead to the imposition of substantial fines. Should you have any questions please contact the local office of the EPA.

## Inspection Upon Unit Arrival

As soon as unit is received, it should be inspected and noted for possible shipping damage during transportation. It is carrier's responsibility to cover the cost of shipping damage. Manufacturer or distributor will not accept a claim from contractors for any transportation damage.

## Clearances

Following clearances should be provided during installation:

a. Maintenance and service access, including coil cleaning and coil assembly removal
b. Refrigerant piping and connections
c. Condensate drain line

To ensure the proper installation, select a solid and level site.

Ensure there is enough required space for installation and maintenance. More than 20 inches of straight duct recommended for vertical upflow and Horizontal left installation

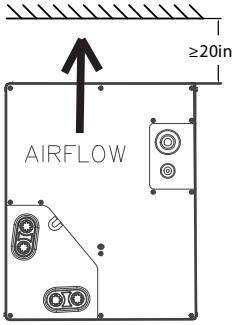


Front view of the indoor unit clearance (including air duct)

**Fig. 7 – Clearance - Front View**

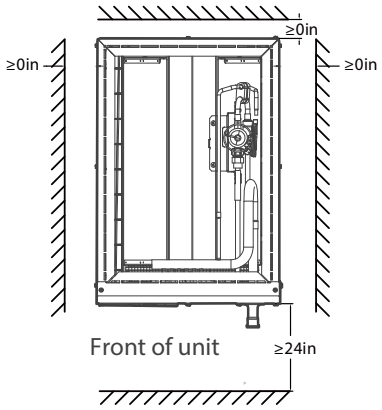


Top View of the indoor unit clearance (including air duct)

**Fig. 8 – Clearance - Top View**

## Installation and Trap Connection

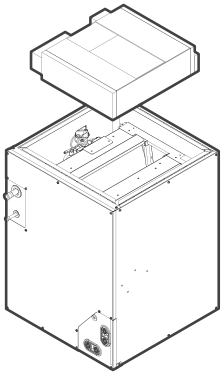

Take out the packing before installation (For some models)

**Fig. 9 – Remove Packing Material**

***Coil installation and drain connection.***

1. Installation steps for cased coil:
   a. Shut off or disconnect gas furnace's power and remove gas pipe if necessary.
   b. Disconnect and remove a sufficient portion of the supply ductwork to provide clearance for the cased coil.
   c. Ensure that the coil is leveled well and seal the gap between coil and furnace. In case that coil and furnace sizes are not matched, use proper size of sheet metal or other material to fill the gap and seal the gap to prevent air leak.
   d. Reconnect the ductwork to the coil case, and seal any leakage.
   e. Reconnect Power line on gas furnace, turn on the furnace to check for any sign of leakage.

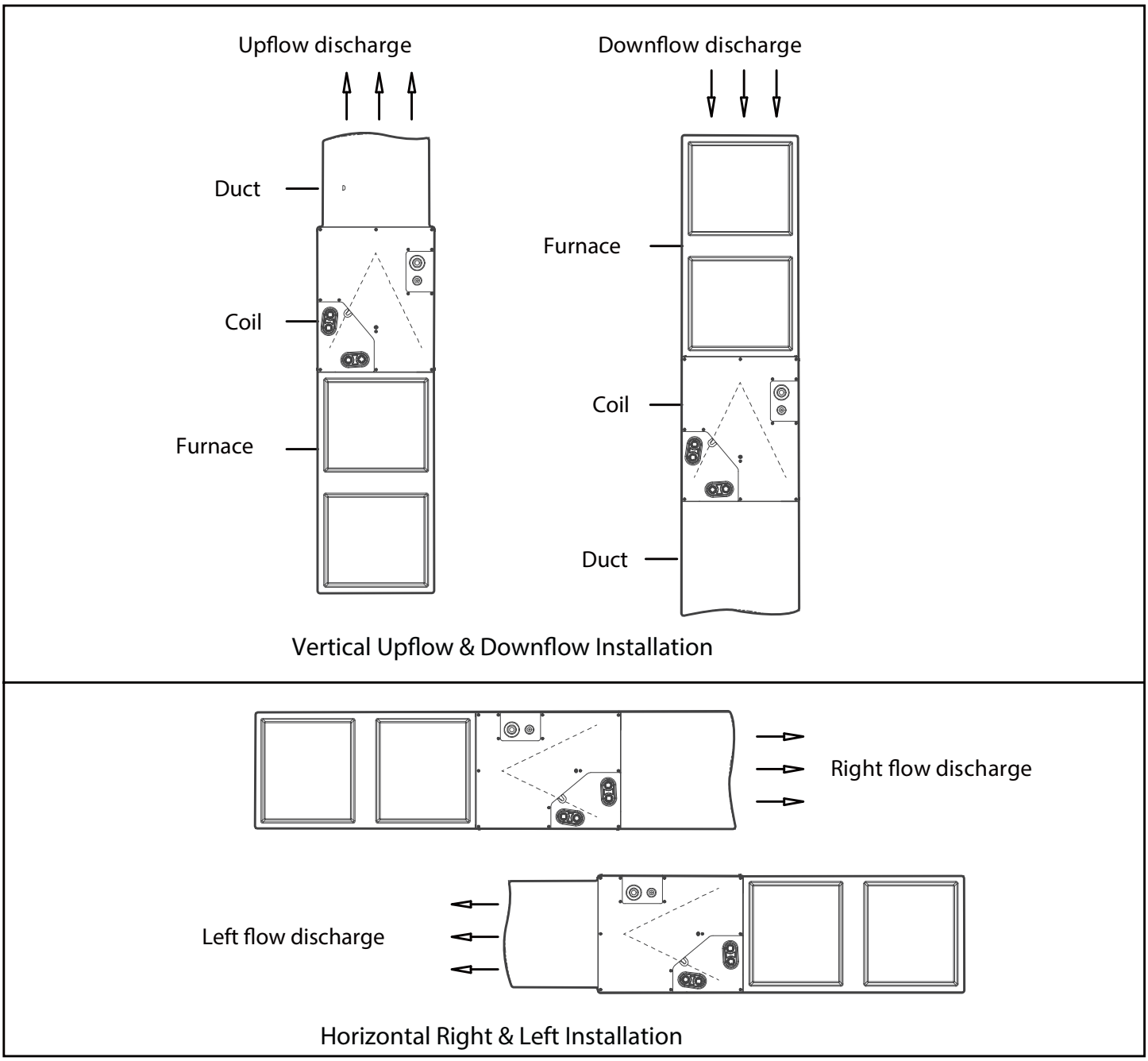


**Fig. 10 – Installation Type 1 -Typical Coil Installation on Furnace**

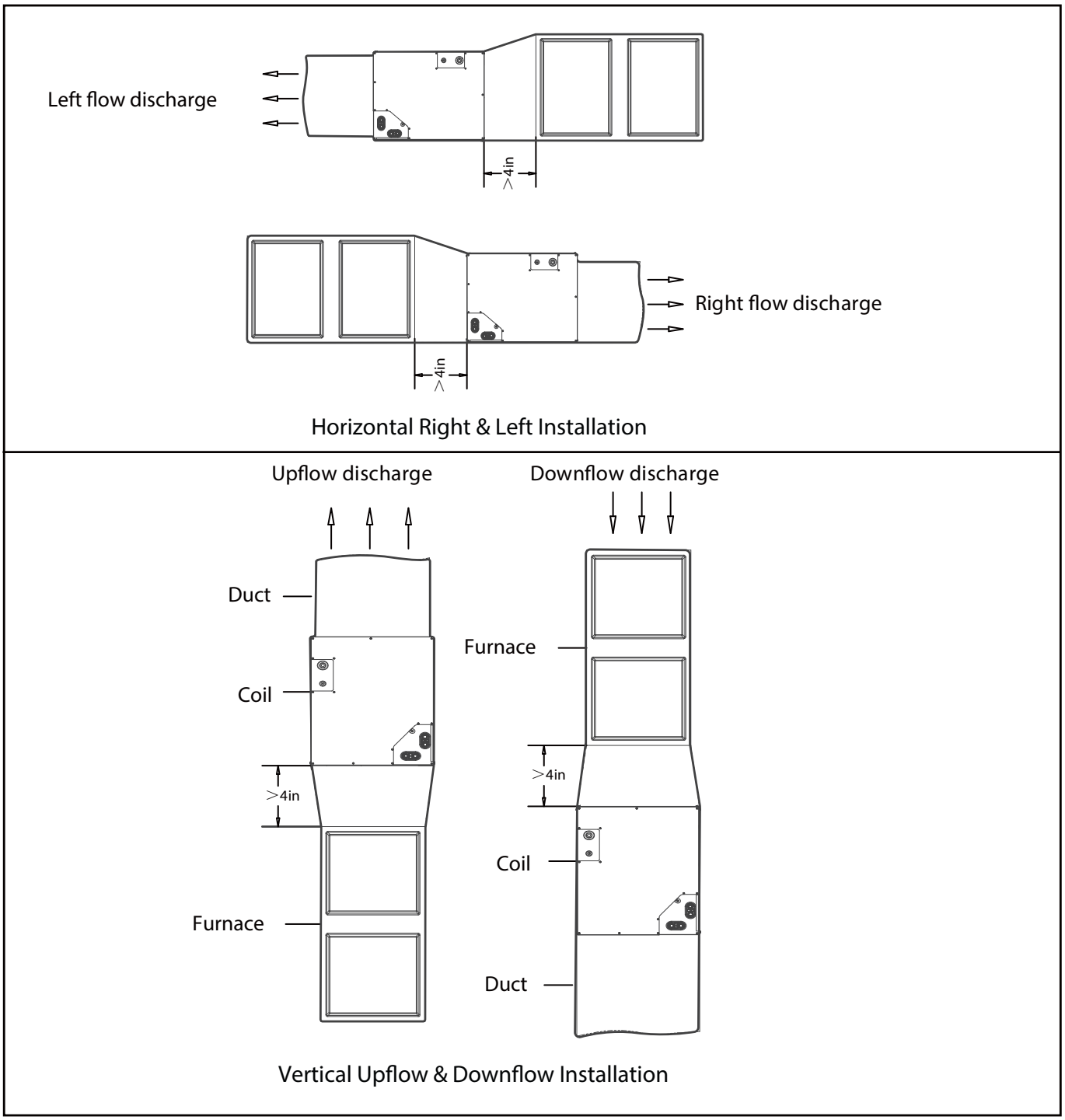


**Fig. 11 – Installation Type 2- Model 45MULAQ60XMX Coil Installation on Furnace**

## Installation

***Installation of Evaporator Coils***

Upflow coil installation

The cased coil is designed to fit furnaces of the same width.

1. Set coil in place on upflow furnace discharge air opening.
2. Ensure coil is level for proper condensate drainage. Do not tip coil toward condensate drain. Coil casing need not be fastened or screwed to furnace.
3. When installing wider coil on narrow furnace, create field fabricated adapter.

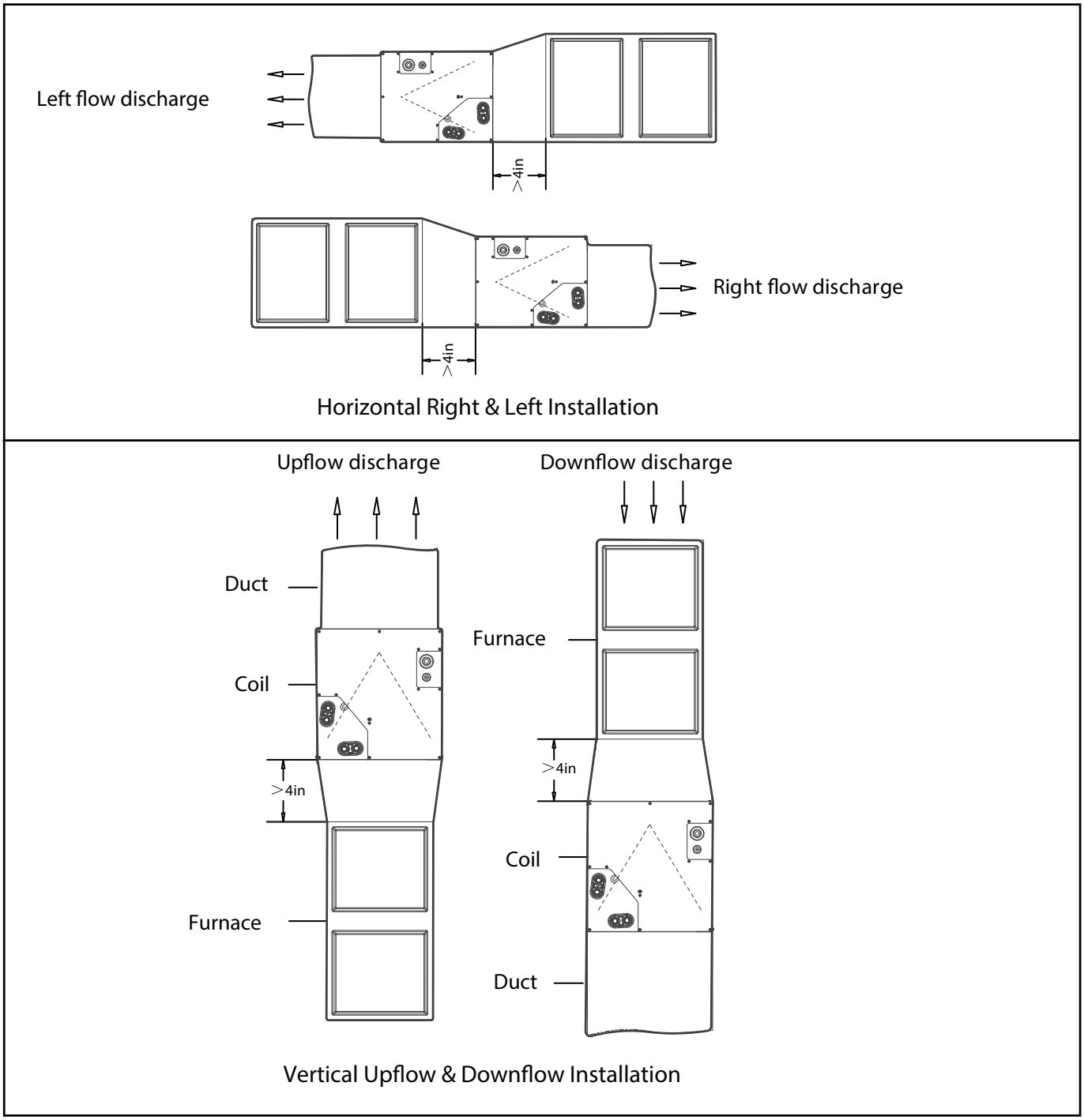


**Fig. 12 – Installation Type 3 - Adapter(s) Installation When Coil Overhangs Furnace**

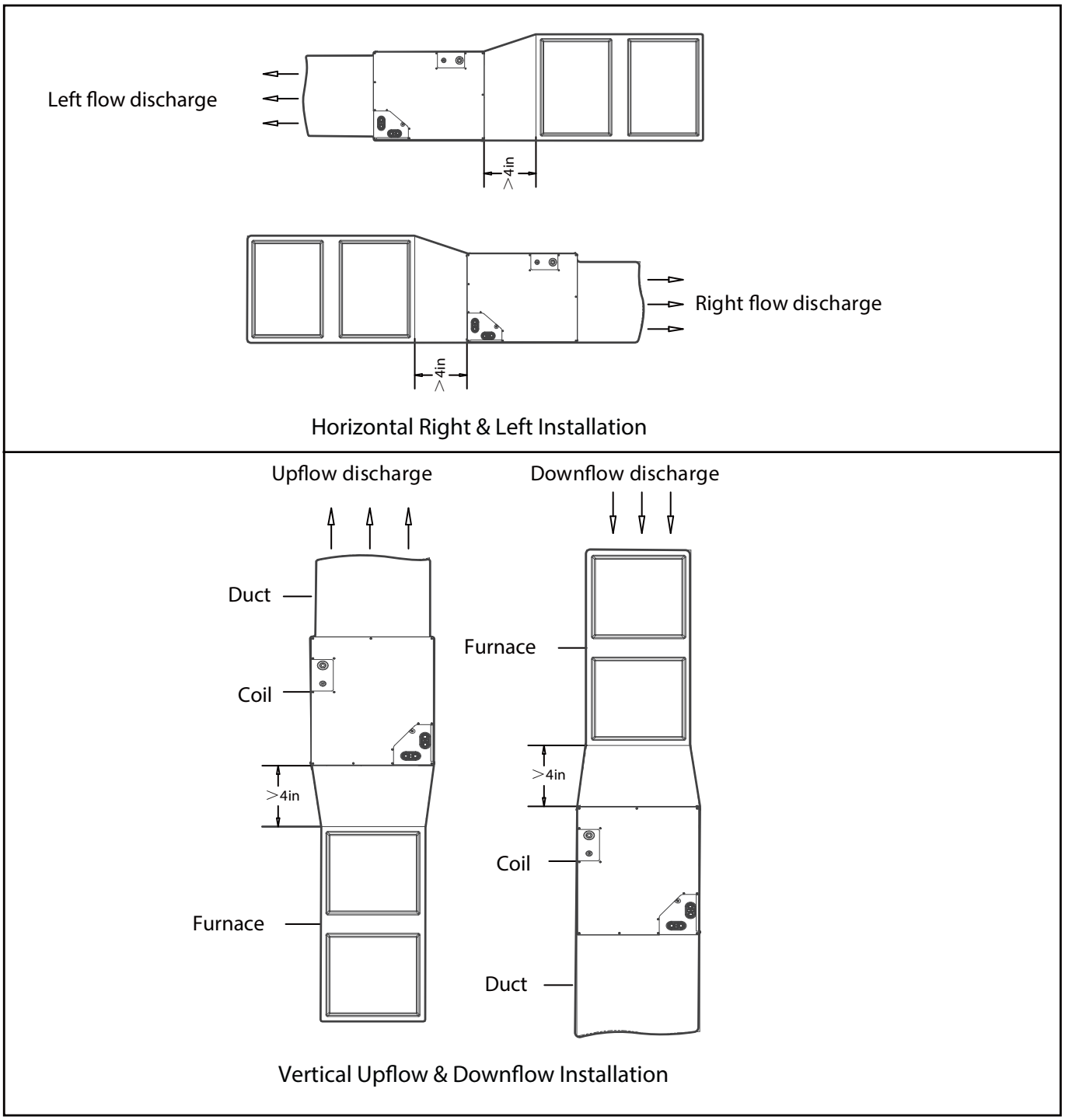


**Fig. 13 – Install 4” Duct Transition When Model 45MULAQ60XMX Coil Overhangs Furnace**

**NOTE:** On upflow installations where the indoor coil is placed in an unconditioned space, a 6” wide piece of insulation should be applied and wrapped around the outside of coil casing and supply duct contact point.

**NOTE:** Consult the furnace installation instructions for any special requirements when installing the coil to the furnace.

## Downflow Coil Installation

**IMPORTANT:** If the airflow is high due to ductwork or other causes, and there is a chance for water blow off, it is recommended that a 4-in. minimum field-supplied adapter be placed between the coil and the furnace to allow the air to distribute evenly to both coil slabs.

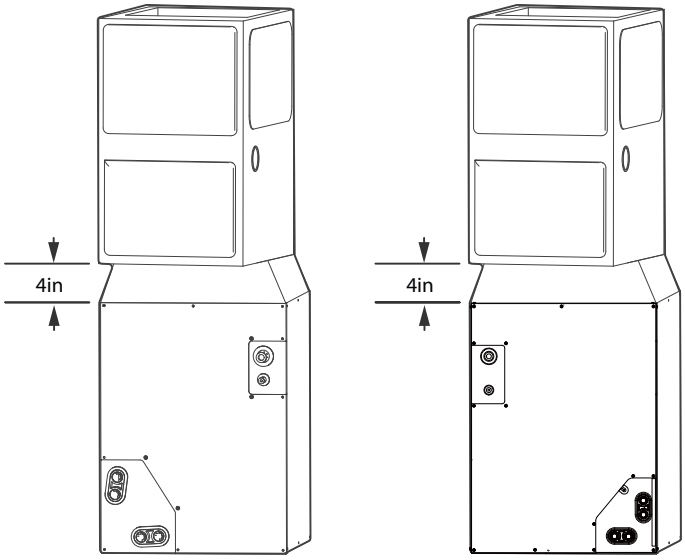


**Fig. 14 – Downflow Coil Installation**

1. Set cased coil on supply duct opening.
2. Place field fabricated 4-in. minimum adapter on coil casing. Adapter should be tapered to fit coil/furnace combination when one of them is larger than the other.
3. Set furnace on adapter.

**NOTE:** In downflow installation with a 4-way multiposition furnace, break off perforated duct flanges on furnace. See furnace installation instructions.

## Installation of Refrigerant Sensor

The wire of the refrigerant sensor must be connected to the leak mitigation primary leak mitigation connection on interface at CN8 output. There are 2 leak detection connections on the interface board; the black is primary and the red at CN5 is secondary (which has to be enabled by turning on dip switch SW5). The black connection at CN8 is default active for leak sensing.. For specific operation instructions, please refer to the Wiring Diagrams and Explanatory label of the leak mitigation control kit.

**⚠ WARNING**

**PERSONAL INJURY RISK**

When using a gas furnace for heating, ensure that the heat exchanger temperature does not exceed 2000F. Exceeding this temperature may cause the refrigerant leak sensor to malfunction, which can lead to a hazardous situation.

## Horizontal Coil Installation

The unit can be installed on a work platform, secured to roof truss in attic, suspended from hangers on floor joists in crawl space, or installed on blocks. It is designed to allow airflow in either direction, to mate with horizontal-left or horizontal-right furnace installations.

Ensure coil cabinet is level side to side and front to back. It is allowable to add up to 1/2-in. additional slope over length and depth of coil cabinet in the direction of drain pan connection.

## Horizontal Right Installation

1. Use field fabricated attachment plates to secure coil to furnace.
2. Use self-tapping screws to mount attachment plates to coil casing.
3. Connect furnace snugly against coil casing.
4. Use self-tapping screws to attach furnace.
5. Seal joint between coil casing and furnace to create an air tight seal using locally approved materials.
6. If coil is wider than furnace, use 4-in minimum transition and self-tapping screws to attach furnace.

## Horizontal Left Installation

1. Unbend the 4 tabs at the right side of the casing.
2. Connect furnace snugly against coil casing.
3. Use self-tapping screws to attach furnace.
4. Seal joint between coil casing and furnace to create air tight seal using locally approved materials.
5. If coil is wider than furnace, use 4-in. Minimum transition and self-tapping screws to attach furnace.

## Refrigerant Line Connections

**⚠ WARNING**

**PERSONAL INJURY RISK**

- Failure to follow this warning could result in personal injury. Wear eye protection.
- Coil is factory charged with 15 psi nitrogen. The coil is under pressure and TXV screen is in place behind liquid line plug. DO NOT remove liquid line plug first, always remove the suction line plug first to depressurize the coil.

**NOTE:** Factory nitrogen charge may escape past rubber plugs during storage. This does not indicate a leaking coil nor warrant return of the coil. Size and install refrigerant lines according to information provided with outdoor unit.

Route refrigerant lines to the coil in a manner that will not obstruct service access to the unit or removal of the filter. Do not use damaged, dirty, or contaminated tubing because it may plug refrigerant flow-control device. ALWAYS evacuate the coil and field-supplied tubing before opening outdoor unit service valves.

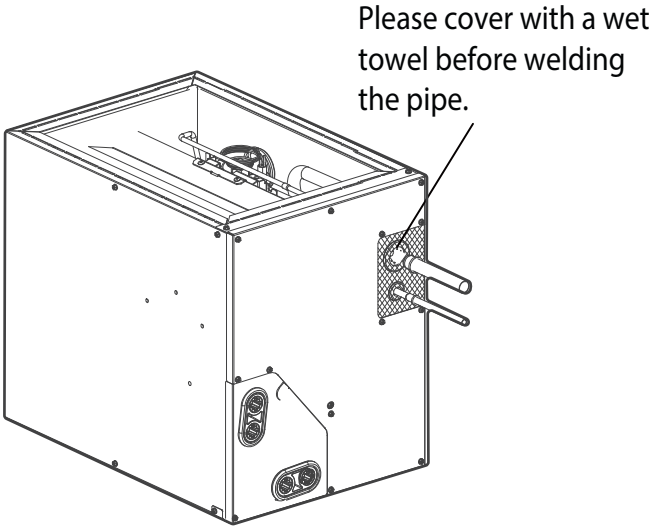


**Fig. 15 – Welding Precaution**

## Connect Refrigerant, Liquid, And Suction Lines

For matched systems, use line sizes recommended in outdoor unit Installation Instructions.

**⚠ CAUTION**

**Property Damage Risk**

Failure to follow this caution may result in property damage. Take precautions to ensure Aluminum tubes do not come in direct contact or allow for condensate run off with a dissimilar metal. Dissimilar metals can cause galvanic corrosion and possible premature failure.

The coil can be connected to outdoor units using field-supplied tubing of refrigerant grade. Always evacuate tubing and reclaim refrigerant when making connections or flaring tubing.

Leak check connections before insulating entire suction line.

1. Remove cabinet access door.
2. Remove rubber plugs, suction plug then liquid plug, from coil stubs using a pulling and twisting motion. Hold coil stubs steady to avoid bending or distorting.
3. Remove tubing plate with rubber grommets and slide plate with grommets onto the refrigerant lines (field line-set), away from braze joints.
4. Fit refrigerant lines into coil stubs. Wrap a heat sinking material such as a wet cloth behind braze joints.
5. Wrap TXV and nearby tubing with a heat-sinking material such as a wet cloth.
6. Use 1/2 Psig Nitrogen purge in the suction and out the liquid line.
7. Braze using a Sil-Fos or Phos-copper alloy. Do not use soft solder.
8. After brazing, allow joints to cool. Carefully remove TXV bulb insulation and verify that the TXV bulb is securely fastened with hose clamp. Tighten screw a half-turn past hand tight with TXV bulb placed in the indentation with full contact with the vapor line tube. Re-wrap TXV bulb with insulation.
9. Leak check connections before insulating entire suction line.
10. Slide tubing plate with rubber grommets over joints. Position tubing at center of each grommet to ensure an air seal around the tube. Reinstall cabinet door.

**⚠ CAUTION**

**Product Damage Risk**

Failure to follow this caution may result in product damage. To avoid valve damage to the refrigerant control device while brazing, valves must be wrapped with a heat-sinking material such as a wet cloth.

## Refrigerant Metering Device

These Coils have a factory installed hard shut-off TXV designed only for use with R454B refrigerant. Use only with outdoor units designed for R454B.

**NOTE:** ALL TXV'S HAVE PRESET SUPERHEAT SETTINGS AND ARE FIELD NON-ADJUSTABLE.

**⚠ CAUTION**

**Product Damage Risk**

Failure to follow this caution may result in product damage. DO NOT BURY MORE THAN 36 IN. OF REFRIGERANT TUBING IN GROUND. If any section of tubing is buried, there must be a 6 in. vertical rise to the valve connections on the outdoor unit. If more than the recommended length is buried, refrigerant may migrate to cooler buried section during extended periods of unit shutdown, causing refrigerant slugging and possible compressor damage at start-up.

## Condensate Drain Line Connection

**⚠ CAUTION**

**Product Damage Risk**

Failure to follow this caution may result in property damage. When installing over a finished ceiling and/or living area, install a field-fabricated secondary condensate pan under the entire unit.

The coil is designed to dispose of accumulated water through built-in condensate drain fittings. It is recommended that PVC fittings be used on the condensate pan. Don't over-tighten. Finger tighten plus 1-1/2 turns. Be sure to install plastic plug in unused condensate drain fitting. Two 3/4 inch female threaded pipe connections are provided in each coil condensate pan. A trap is not necessary on the condensate line if on the supply air side of furnace. Consult local codes for additional restrictions or precautions. If local codes require a trap, then the following guidelines are suggested to assure proper drainage. Install a trap in condensate line of coil as close the other coil as possible. Make trap at least 3 inches (76 mm) deep and no higher than the bottom of unit condensate drain opening. Pitch condensate line 1 inch (25.4 mm) for every 10 ft. of length to an open drain or sump. Make sure that the outlet of each trap is below its connection to condensate pan to prevent condensate from overflowing the drain pan. Prime all traps, test for leaks, and insulate traps and lines if located above a living area.

**⚠ WARNING**

**Personal Injury or Death Risk**

Failure to follow this warning could result in personal injury or death. Provide trap with air gap in drain line when connecting to waste (sewer) line.

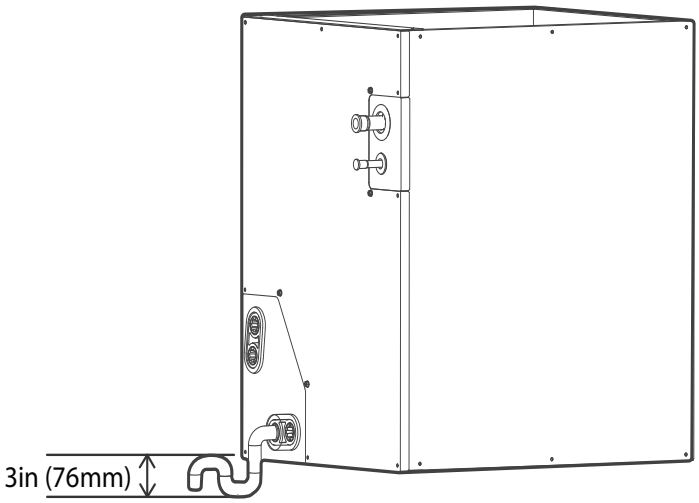


**Fig. 16 – Condensate Drain Height**

**NOTE:** If unit is located in or above a living space, where damage may result from condensate overflow, a field-supplied, external condensate pan should be installed underneath the entire unit, and a secondary condensate line (with appropriate trap) should be run from the unit into the pan. Any condensate in this external condensate pan should be drained to a noticeable place. As an alternative to using an external condensate pan, some localities may allow the running of a separate 3/4 inch (19 mm) condensate line (with appropriate trap) per local code to a place where the condensate will be noticeable. The owner of the structure must be informed that when condensate flows from secondary drain or external condensate pan, the unit requires servicing or water damage will occur. To further protect against water damage. install a float switch to shut the unit off if the water in the secondary pan gets too high.

## Waste Line Connection

If the condensate line is to be connected to a waste (sewer) line, an open trap must be in stalled ahead of the waste line to prevent escape of sewer gases.

# AIR DUCT INSTALLATION

***Flanged Mounting***

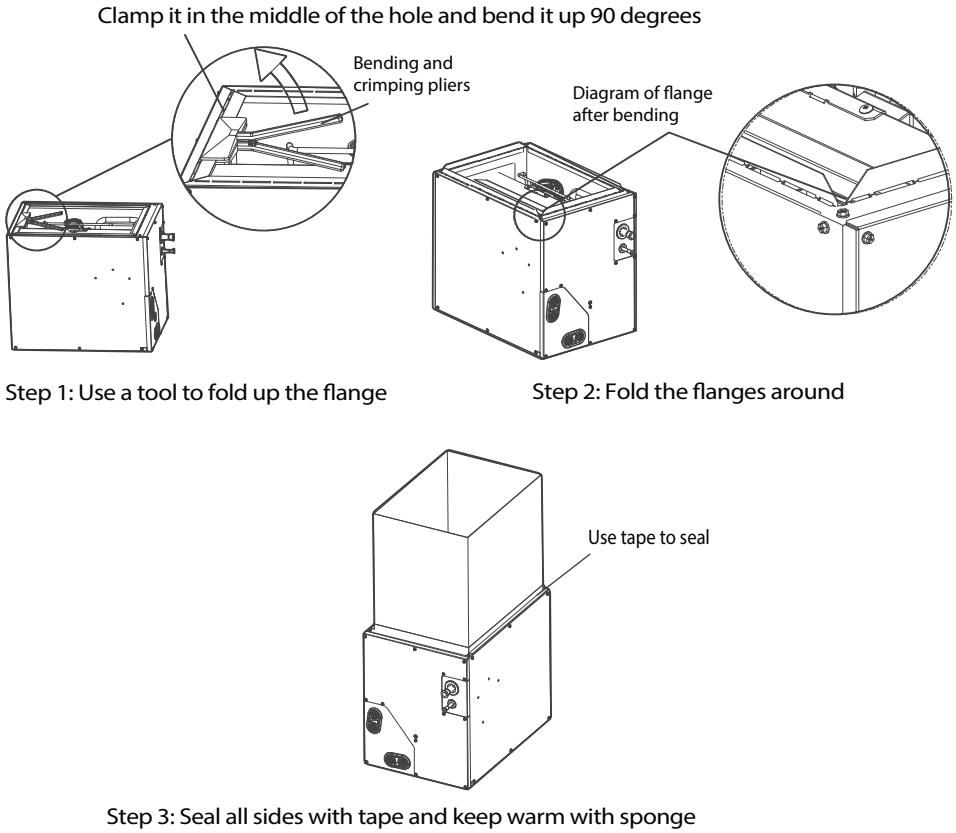


**Fig. 17 – Flanged Mounting**

## Coil Interface Installation

1. Choose Install Location
   Priority should be given to installing on the front of the coil, or you can choose to install it on the side or on nearby walls as needed.
2. Dismantling panels
   Figure 1: Installed on the side of the coil.?Vertical mounting, you can choose left or right)
   Figure 2: Installed on the wall of the coil attach. (Horizontal mounting)
   Figure 3: Installed on the wall of the coil attach.

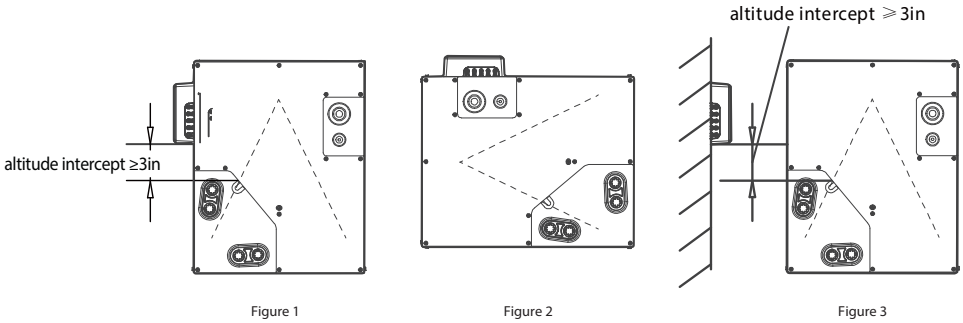


**Fig. 18 – Coil Interface Installation**

3. Dismantling the control box
   Using a screwdriver, pull at the two positions shown in the diagram.

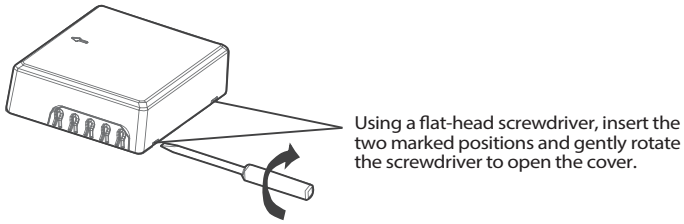


**Fig. 19 – Opening the Control Box Cover**

4. Attach Box
   Attach 3 screws, locate according to pre-drilled holes: right or left side..

**⚠ CAUTION**

**Only use screws provided or equivalent. Coil damage can occur. Refer toTable 7. Maximum length is 5/8" (16mm)**

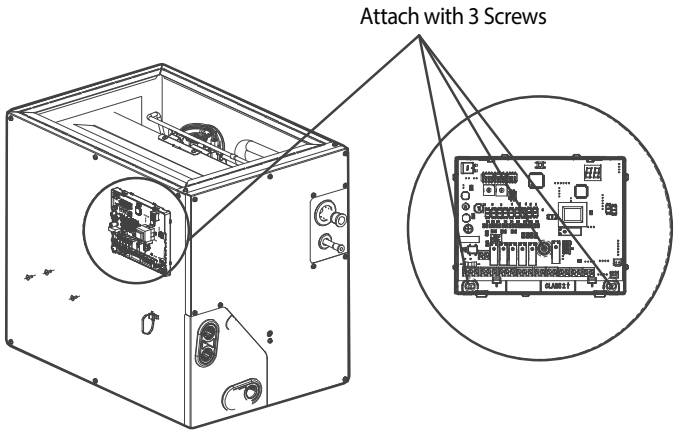


**Fig. 20 – Attach Control Box**

5. Cut out the cover port

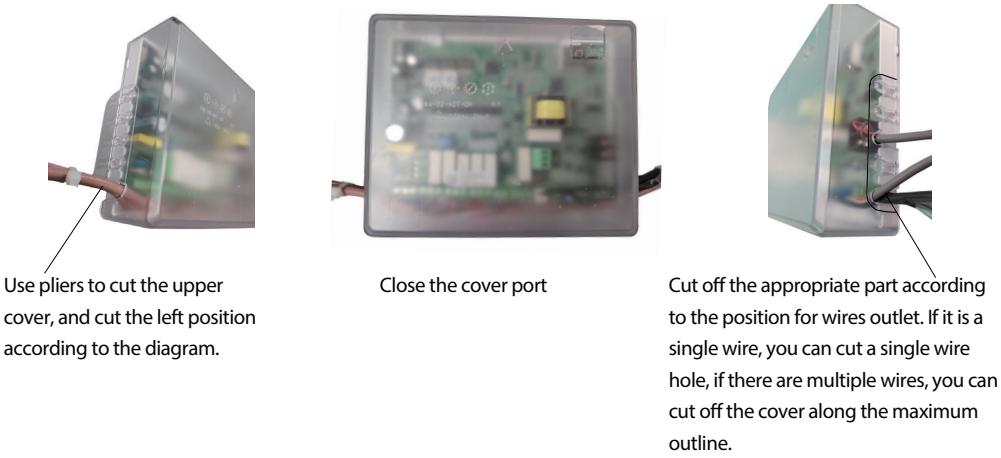


**Fig. 21 – Cut out the cover port opening**

6. Close the Cover
   Close the cover to complete the installation of the control box.

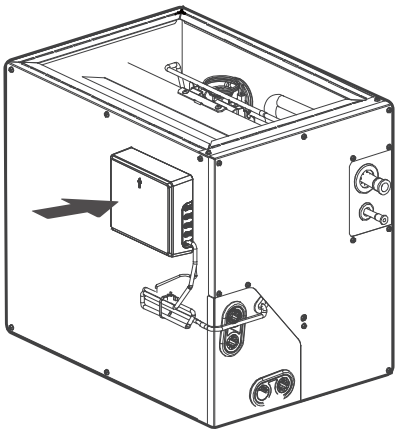

**Fig. 22 – Close Control Box Cover**

## WIRING PRECAUTIONS

**WARNING**

Before performing any electrical work, read these warnings:

- All wiring must comply with local and national electrical codes, regulations and must be installed by a licensed electrician.
- All electrical connections must be made according to the Electrical Connection Diagram located on the panels of the indoor and outdoor units.
- If there is a serious safety issue with the power supply, stop work immediately. Explain your reasoning to the client, and refuse to install the unit until the safety issue is properly resolved.
- Power voltage should be within 90-110% of rated voltage. Insufficient power supply can cause malfunction, electrical shock, or fire.
- Installation of an external surge suppressor at the outdoor disconnect is recommended.
- If connecting power to fixed wiring, a switch or circuit breaker that disconnects all poles and has a contact separation of at least 1/8in (3mm) must be incorporated in the fixed wiring. The qualified technician must use an approved circuit breaker or switch.
- Only connect the unit to an individual branch circuit. Do not connect another appliance to that Circuit.
- Make sure to properly ground the air conditioner.
- Every wire must be firmly connected. Loose wiring can cause the terminal to overheat, resulting in product malfunction and possible fire.
- Do not let wires touch or rest against refrigerant tubing, the compressor, or any moving parts within the unit.
- To avoid getting an electric shock, never touch the electrical components soon after the power supply has been turned on. After turning o the power, always wait 10 minutes or more before you touch the electrical components.
- Make sure that you do not cross your electrical wiring with your signal wiring. This may cause distortion, interference or possibly damage to circuit boards.
- No other equipment should be connected to the same power circuit.
- Connect the outdoor wires before connecting the indoor wires.

**WARNING**

Failure to follow this warning could result in product damage, personal injury, or death.

Before performing any electrical or wiring work, turn off the main power to the system.

## Wiring Overview

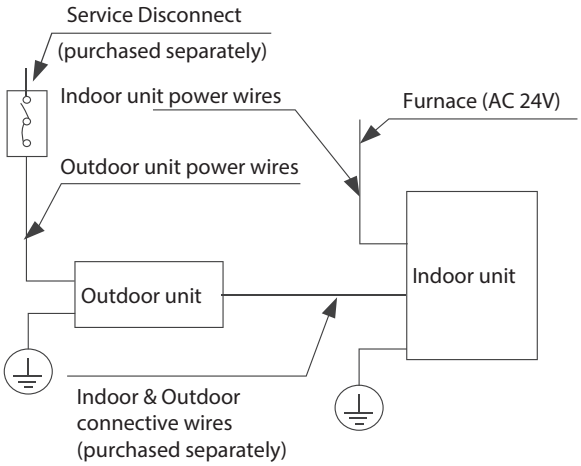


**Fig. 23 – Wiring Overview**

**NOTE: Wiring overview is for general explanation only. Your unit may be slightly different. The actual diagram should prevail.**

## INDOOR UNIT WIRING

The power to the unit must be disconnected before any wiring. Be sure to show application of tubing clamp and room temp sensor and cable.

Make note to review the different application (scenarios) options for proper wiring. Make sure strain relief and proper conduit are used when connecting to the box, recommended use of metal-clad cable.

**NOTE:** Use copper wire only. Separate the power supply leads and communication leads by the strain relief or segregate the power supply leads from communication leads.

Instruction for installation of the critical-to-safety wiring connection of the leak detection sensor or leak detection system to the furnace assembly.

The wiring shall be not less than 18 AWG with a minimum insulation thickness of 1.58 mm or protected from damage. Critical-to-safety wiring is any field installed wiring necessary to fulfill the requirements of minimum room area in the event of detection of a leak.

The appliance shall not be installed on furnaces with an inductive electrical greater than Le as calculated as follows:

the switched electrical load (Le) in kVA is less than or equal to:

- Le = 5 x (6,7/Su)4 when breaking all phases;

- Le = 2,5 x (6,7/Su)4 when breaking two legs of a three-phase load, or when breaking one or two legs of a single-phase load.

Where Le is the switched inductive electrical load in kilo volt-amperes (kVA); Su is the burning velocity of a refrigerant in centimeters per second (cm/s).

Detection of a leak shall turn on the indoor fan at the highest available speed or turn it on to not less than minimum airflow (Qhmin).

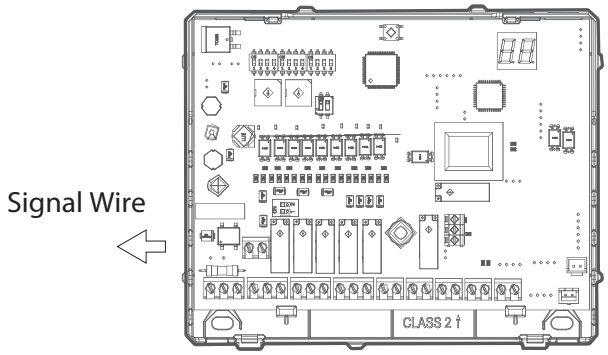


| LINES GAUGE | | |
|---|---|---|
| OUTDOOR-INDOOR SIGNAL WIRE | LINE DIAMETER(AWG) | 16 |
| 24V SIGNAL WIRE | LINE DIAMETER(AWG) | 18 |

**Fig. 24 – Signal Wire - Lines Gauge**

***Ratings***

**Table 10 – Electrical - INPUTS**

| Input Type | Input Rating | Terminals | Recommended Wire Range / Torque |
|---|---|---|---|
| **Power Input** | 24 V ac, 60 Hz, 300mA, Class 2 | Terminal Block CN1-3(R), CN1-2(C) | 14-22 AWG / 4.5 1n-lb (0.5N-m) |
| **Remote Control Signal Input** | 12 V DC, SELV | CN2 | 14-22 AWG /4.5 1n-lb (0.5N-m) |

**Table 11 – Communication**

| TYPE | RATING | TERMINALS | RECOMMENDED WIRE RANGE / TORQUE |
|---|---|---|---|
| Communication Between Indoor and Outdoor Unit | 5 V DC, Class 2, Limited Energy (≤ 15 W) | CN17 | 16 AWG / 0.5 N·m |
| Communication Between Data Conversion Module PWB and Centralized Controller | 5 V DC, Class 2 | CN3 | 16-18 AWG / 0.5 N·m |
| External Communication | 18 V DC, Class 2, Limited Energy (≤ 15 W) | CN19 | 14-22 AWG / 0.5 N·m |
| Communication Between Data Conversion Module PWB and Refrigerant Sensor | DC, Class 2, Limited | CN5, CN8 | 14-22 AWG / 0.5 N·m |

**Table 12 – Outputs**

| TYPE | RATING | TERMINALS | RECOMMENDED WIRE RANGE / TORQUE |
|---|---|---|---|
| Control Device for Furnace (Relay RY7, RY8) | 24 V AC, 60 Hz, Class 2, General Use (Signal Use) | CN9 | 18 AWG / 0.5 N·m |
| Control Device for Furnace (Relay, RY9, RY10) | 24 V AC, 60 Hz, Class 2, General Use (Signal Use) | CN10 | 18AWG / 0.5 N·m |

## Wiring Diagram

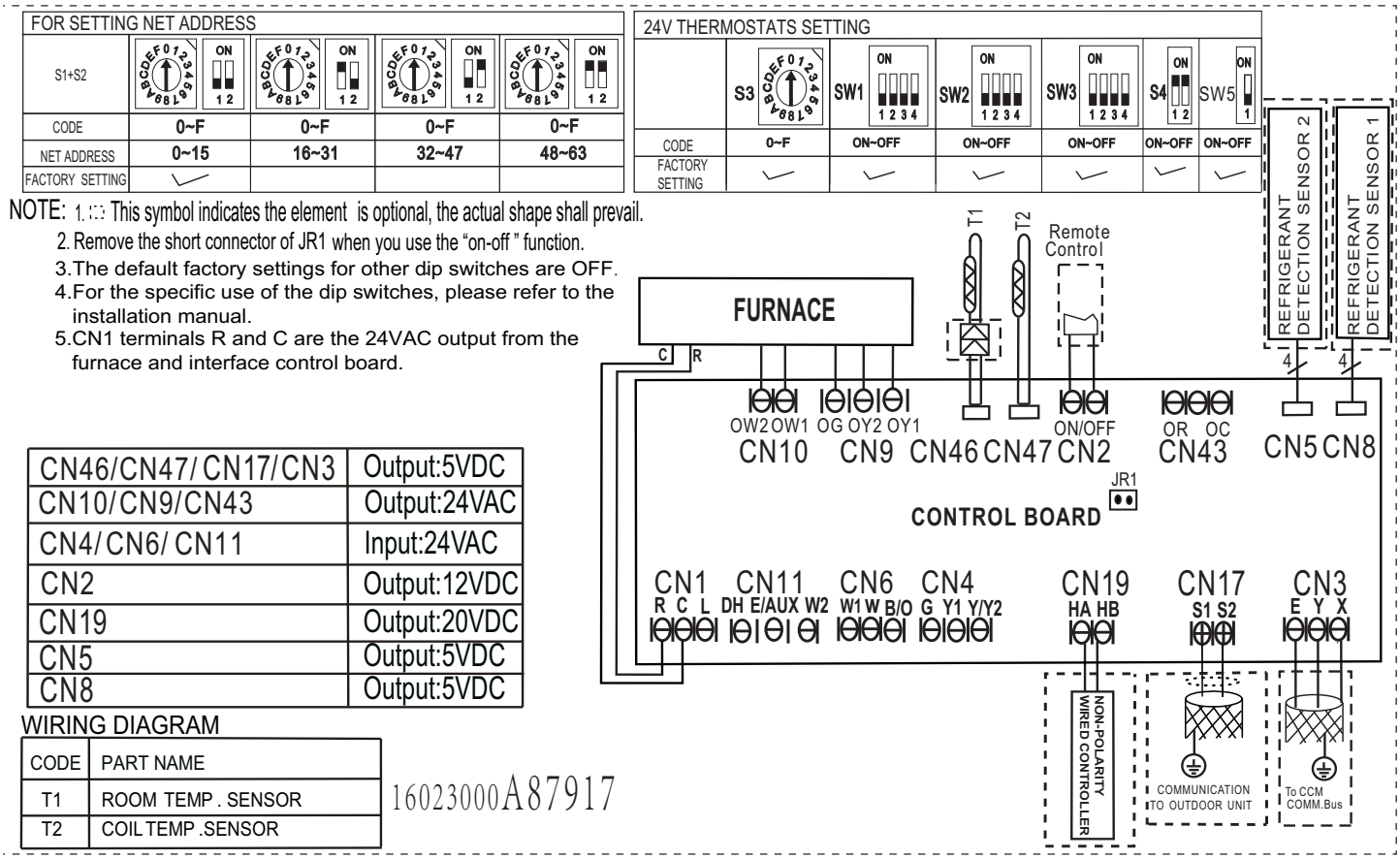


**Fig. 25 – Wiring Diagram**

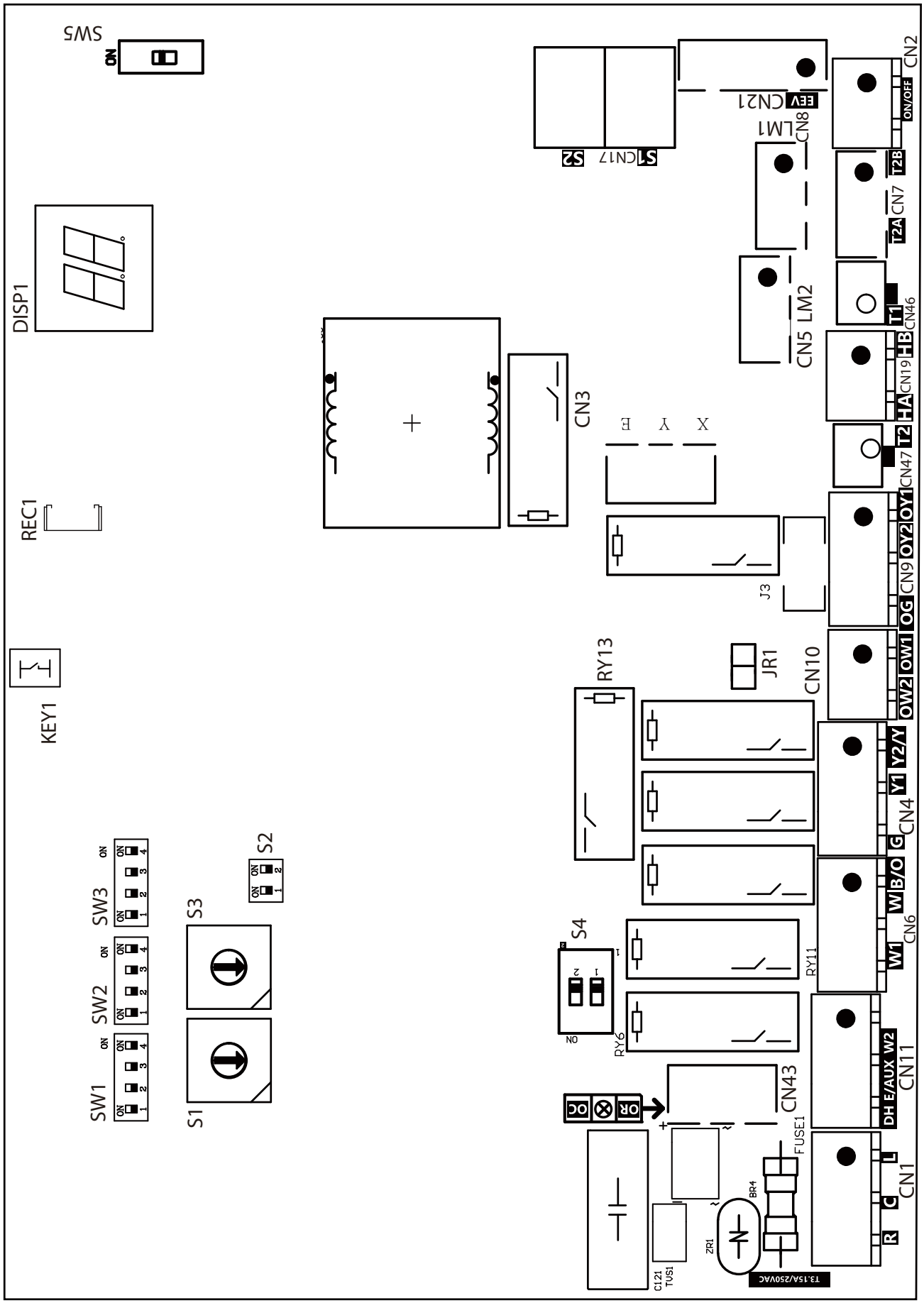


**Fig. 26 – Wiring Terminal Layout**

## CONTROL SIGNALS TO THE FURNACE

Control signals to the furnace are the standard thermostat control signals R,C,OW1,OW2, OG, OY1 and OY2.

**Table 13 – Connector Usage**

| Connector | Usage |
|---|---|
| **R** | Provides 24VAC power from the furnace to the board. |
| **C** | The 24VAC common wire between the furnace and the board |
| **OW1** | First stage of furnace command line from the board to the furnace (OW1-W1). If the furnaces that only have a W and do not have a W2, connect OW1 to the W of the furnace and make no connection with the OW2 signal wire (OW1-W). |
| **OW2** | Second stage of furnace command line from the board to the furnace (OW2-W2). OW2 cannot be ON unless OW1 is already ON |
| **OG** | Connect the OG signal to G of the furnace (OG-G). If the furnaces that do not have a G, connect OG to the Y or Y1 of the furnace (OG-Y or OG-Y1). |
| **OY1** | For 1-speed configuration, connect the OY1 signal to Y of the furnace and make no connection with the OY2 signal wire (OY1-Y). For 2-speed configuration, connect the OY1 signal to Y1 of the furnace (OY1-Y1). |
| **OY2** | For 2-speed configuration, connect the OY2 signal to Y2 of the furnace (OY2-Y2). In this configuration, the OY2 signal turns on as follows:<br>In Cool mode or Heat mode with HP when high speed fan is requested. In Auto Fan and Cool mode, the signal goes to high speed when the difference between room temperature and set point temperature is more than or equal to 1.5°C. The signal goes back to low speed when the temperature difference is less than 1°C.<br>In Auto Fan and Heat mode with the HP, the signal goes to high speed when the difference between room temperature and set point temperature is less than or equal to -1.5°C. The signal goes back to low speed when the temperature difference is more than 0°C. |

**In addition:**

Room temperature sensor to be installed in the return air duct temperature sensor to be installed on the COIL as specified.

## SPECIFY WIRING METHODS

**WARNING**

**PRODUCT DAMAGE RISK**

Please refer to the wiring nameplate for the wiring method. Do not connect 24VAC to S1 - S2, as this will damage the system.

### Connection Method

Full communication.

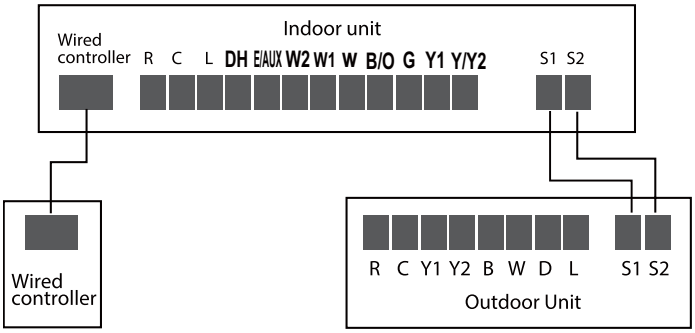


**Fig. 27 – Terminal Connections**

Function combination table of SW1-1 and SW1-4:

| SW1 | Control type | IDU and ODU Connection | Note |
|---|---|---|---|
| ON 1 2 3 4 | Wired controller | (S1+S2) | Auto Discovery |
| ON 1 2 3 4 | Wired controller | S1+S2 | Scenario 2 |

**Fig. 28 – DIP Switch Combination Table**

## Control Box Dial Codes

### Table 14 — Indoor Unit Dial Codes

| NO | DIAL CODE | CONTROL SCENARIO | FUNCTION | ON | OFF | NOTE |
|---|---|---|---|---|---|---|
| 1 | SW1-2 | 1, 2 | Anti-cold blow protection option | NO | [Default] YES | |
| 2 | SW1-3 | 1, 2, 3 | Single cooling / heating and and cooling options | Cooling | [Default] Cooling & Heating | |
| 3 | SW2-1 | 2 | Temperature differential to activate first stage furnace heating for HP + furnace mode. | 2°F (1°C) | [Default] 2°F (1°C) | |
| 4 | SW2-4 | 1 | Compressor | The operation of heat pump is limited by the outdoor temperature, and the operation of furnace heat is not limited.The system makes judgments according to the following rules:<br>1) The compressor can be operated when the outdoor temperature is ≥S3 DIP switch temperature +4°F (+2°C).<br>2) The compressor cannot be operated when the outdoor temperature is lower than the S3 DIP switch temperature. | | SW2-4 and S3 need to work together |
| 5 | SW2-4 | 2 | Compressor/Auxiliary heat outdoor ambient lockout | The operation of heat pump is limited by the outdoor temperature, and the operation of auxiliary heat is not limited.The system makes judgments according to the following rules:<br>1) The compressor can be operated when the outdoor temperature is ≥S3 DIP switch temperature +4°F (+2°C).<br>2) The compressor cannot be operated when the outdoor temperature is lower than the S3 DIP switch temperature. | [Default] Only one heat pump or auxiliary heat can be operated.The system makes judgments according to the following rules:<br>1) When the outdoor temperature is lower than the S3 DIP switch temperature, the compressor is not allowed to operated, but auxiliary heat is allowed to operated ;<br>2) When the outdoor temperature is ≥S3 DIP switch temperature +4°F (+2°C), the compressor can be operated, but auxiliary heat cannot be operated. | |
| 6 | Rotary Switch S3 | 1, 2 | Set outdoor temperature Limitation (for auxiliary heating or compressor) | Table A | | |
| 7 | SW3-1 | 1 | System automatically stages up capacity to satisfy set point. This adds 1 to 5°F (0 to 2°C) to the user set point in the calculated control point to increase capacity and satisfy user set point | 30 minutes | [Default] 90 minutes | |
| 8 | SW3-2 | 1 | Cooling and heating Y/Y2 temperature differential adjustment. | Compressor slower speed | [Default] Faster Compressor | Only affects compressor |
| 9 | SW3-3 | 2 | Temperature differential to active second stage furnace heating for furnace only or HP+ furnace mode. | 6°F (3°C) | [Default] 4°F (2°C) | Only affects compressor |
| 10 | SW4-1 | 1, 3 | Default ON | [Default] For single stage supplemental heat, W1 and W2 are connected | For dual stage supplemental heat, W1 and W2 are controlled independently | |
| 11 | SW4-2 | 1, 3 | DH function selection | [Default] Dehumidification control not available | Dehumidification feature is enabled through thermostat | |
| 12 | SW5 | 1, 2, 3 | Selection of the second Refrigerant Sensor | Both Refrigerant Sensors are used | [Default] Only use the first Refrigerant Sensor, interface is CN8 | |

**Table 15 – Table A -Temperature Settings**

| S3 | S3 (°F) | S3 (°C) |
|---|---|---|
| 0 | OFF | OFF |
| 1 | -22 | -30 |
| 2 | -18 | -28 |
| 3 | -15 | -26 |
| 4 | -11 | -24 |
| 5 | -8 | -22 |
| 6 | -4 | -20 |
| 7 | 3 | -16 |
| 8 | 10 | -12 |
| 9 | 18 | -8 |
| A | 25 | -4 |
| B | 32 | 0 |
| C | 36 | 2 |
| D | 39 | 4 |
| E | 43 | 6 |
| F | 46 | 8 |

## Description of Wired Controller Modes

**Table 16 – Controller Modes**

| | |
|---|---|
| Heat Pump | HP heating |
| Furnace | Single-furnace heating |
| Dual Fuel | Furnace heating, HP heating automatic control |

# TEST RUN

**CAUTION**

**Property Damage, Or Personal Injury Risk**

Failure to perform the test run may result in unit damage, property damage, or personal injury.

## Before Test Run

A test run must be performed after the entire system has been completely installed. Confirm the following points before performing the test:

a. Indoor and outdoor units are properly installed.
b. Piping and wiring are properly connected.
c. No obstacles near the inlet and outlet of the unit that might cause poor performance or product malfunction.
d. Refrigeration system does not leak.
e. Drainage system is unimpeded and draining to a safe location.
f. Insulation of piping and duct is properly installed.
g. Grounding wires are properly connected.
h. Length of the piping and additional refrigerant capacity have been recorded.
i. Power voltage is the correct voltage for the air conditioner

## Test Run Instructions

1. Open both the liquid and gas service valves.
2. Turn on the main power switch and allow the unit to warm up.
3. Set the air conditioner to COOL mode.
4. For the Indoor Unit
   a. Double check to see if the room temperature is being registered correctly.
   b. Ensure the manual buttons on the indoor unit works properly.
   c. Check to see that the drainage system is unimpeded and draining smoothly.
   d. Ensure there is no vibration or abnormal noise during operation.
5. For the Outdoor Unit
   a. Check to see if the refrigeration system is leaking.
   b. Make sure there is no vibration or abnormal noise during operation.
   c. Ensure the wind, noise, and water generated by the unit do not disturb your neighbors or pose a safety hazard.
6. Drainage Test
   a. Ensure the drain pipe flows smoothly. New buildings should perform this test before finishing the ceiling.
   b. Turn on the main power switch and run the air conditioner in COOL mode.
   c. Check to see that the water is discharged. It may take up to one minute after the unit begins to drain depending on the drain pipe.
   d. Make sure that there are no leaks in any of the piping.
   e. Stop the air conditioner. Turn off the main power switch and reinstall the test cover.

**NOTE: If the unit malfunctions or does not operate according to your expectations, please refer to the Troubleshooting section of Service Manual before calling customer service.**

© 2025 Carrier. All rights reserved.

**Manufacturer reserves the right to change, at any time, specifications and designs without notice and without obligations.**