50HCQ
High Efficient
Packaged Rooftop Heat Pump Units
3 to 10 Tons

Carrier
turn to the experts

Product Data

WeatherMaster®

C10222

ENERGY STAR

AHRI CERTIFIED™ www.ahridirectory.org

Use of the AHRI Certified TM Mark indicates a manufacturer's participation in the program For verification of certification for individual products, go to www.ahridirectory.org.

c UL US

ASHRAE 90.1 COMPLIANT

Puron™ the environmentally sound refrigerant

TABLE OF CONTENTS

	PAGE
FEATURES AND BENEFITS	3
MODEL NUMBER NOMENCLATURE	4
FACTORY OPTIONS & ACCESSORIES	5
AHRI CAPACITY RATING	8
SOUND PERFORMANCE	9
PHYSICAL DATA	10
ELECTRIC HEAT-ELECTRICAL DATA	12
WEIGHTS & DIMENSIONS	20
OPTION/ACCESSORY WEIGHTS	31
APPLICATION DATA	32
COOLING TABLES	33
HEATING CAPACITIES	40
STATIC PRESSURE ADDERS	47
FAN PERFORMANCE	48
ECONOMIZER, BAROMETRIC RELIEF AND PE PERFORMANCE	59
ELECTRICAL INFO	61
MCA / MOCP	64
TYPICAL WIRING DIAGRAMS	80
SEQUENCE OF OPERATION	86
GUIDE SPECIFICATIONS	89

Carrier

turn to the experts

Your Carrier Packaged Heat Pump rooftop unit (RTU) was designed by customers for customers. With no-strip screw collars, handled access panels, and more we've made your unit easy to install, easy to maintain and easy to use.

Easy to install:

All WeatherMaster™ units are field-convertible to horizontal air flow; no special kit required on 04-09 models. Supply duct kit required for 12 size only. Convertible airflow design makes it easy to adjust to unexpected job site complications. Lighter units make easy replacement. Carrier 3 - 10 ton 50HCQ rooftops fit on existing Carrier curbs dating back to 1989. Also, our large control box gives you room to work and room to mount Carrier accessory controls.

Easy to maintain:

Easy access handles by Carrier provide quick and easy access to all normally serviced components. Our "no-strip" screw system has superior holding power and guides screws into position while preventing the screw from stripping the unit's metal. Take accurate pressure readings by reading condenser pressure with panels on. Simply remove the black, composite plug, route your gauge line(s) through the hole, and connect them to the refrigeration service valve(s). Now, you can take refrigeration system pressure readings without affecting the condenser airflow.

Easy to use:

The newly designed, master terminal board by Carrier puts all your connections and troubleshooting points in one convenient place, standard. Most low voltage connections are made to the same board and make it easy to find what you're looking for and easy to access it.

Reliable:

Each unit comes with precision sized and tested scroll compressor that is internally protected from over temperature and pressures. Each refrigerant circuit is further protected with a high pressure, loss of charge and freeze protection switch. In addition, a liquid line filter drier and suction line accumulator protects each circuit. Each unit is factory tested prior to shipment to help ensure units operation once properly installed.

FEATURES AND BENEFITS

- Up to 28% lighter than similar industry units. Lighter rooftops make easier replacement jobs.
- 3 - 10 ton units fit on existing Carrier rooftop curbs which saves time and money on replacement jobs.
- Standardized components and layout. Standardized components and controls make service and stocking parts easier.
- Scroll compressors on all units. This makes service, stocking parts, replacement, and troubleshooting easier.
- Crankcase heater on all models (except 04 size) provides added protection in all applications.
- Precision-sized refrigerant suction line accumulator provides high reliability by preventing liquid from entering the compressor during low ambient conditions and reverse cycle switch over.
- Filed convertible from vertical to horizontal airflow on all models. No special kits required on 04-09 models. Supply duct kit required for 12 size model only.
- 4-way reversing valve rapidly changes the flow of refrigerant to quickly changeover from cooling to heating and heating to cooling.
- Easy-adjust, belt drive motor available on all sizes. Carrier provides a factory solution for most points in the fan performance table. There's no need for field-supplied drives or motors.
- 3-5 ton models come standard with an Electric Drive X13, 5 speed/torque motor to provide exact performance in many applications. Belt drive motor optional on all three phase voltage models.
- Provisions for bottom or side condensate drain.
- Capable of thru-the-base or thru-the-curb electrical routing.
- Dependable time/temperature defrost logic provides a defrost cycle, if needed, every 30, 60, 90 or 120 minutes and is adjustable.
- Single-point electrical connection.
- Sloped, composite drain pan sheds water; and won't rust.
- Standardized controls and control box layout. Standardized components and controls make stocking parts and service easier.
- Clean, easy to use control box.
- Standard coils are copper round tube, aluminum plate fin with optional coil coatings and copper fin design.
- Color-coded wiring.
- Large, laminated wiring and power wiring drawings which are affixed to unit make troubleshooting easy.
- Single, central terminal board for test and wiring connections.
- Fast-access, handled, panels for easy access to the blower and blower motor, control box, and compressors.
- "No-strip" screw system guides screws into the panel and captures them tightly without stripping the screw, the panel, or the unit.
- Exclusive, newly-designed indoor refrigerant header for easier maintenance and replacement.
- Standard mechanical cooling (125°F to 30°F or 52°C to -1°C) .
- 2-in. (51mm) disposable filters on all units.
- High capacity refrigerant filter drier and TXV metering device on each circuit.
- High pressure switch, loss of charge switch and freeze protection adds greater unit reliability.

Carrier Comfort System
PremierLink

MODEL NUMBER NOMENCLATURE

1	2	3	4	5	6	7	8	9	10	11	12	13	14	15	16	17	18
5	0	H	C	Q	A	0	6	A	0	A	6	A	0	B	0	A	0

Series Weathermaster
50HC = Packaged Rooftop High Efficiency

Heat Size
Q = Heat Pump

Refrig. System Options
A = 1–stage cooling models
D = 2–stg. cooling models

Cooling Tons
04 = 3 Ton
05 = 4 Ton
06 = 5 Ton
07 = 6 Ton
08 = 7.5 Ton
09 = 8.5 Ton
12 = 10 Ton

Sensor Options
A = None
B = RA smoke detector
C = SA smoke detector
D = RA & SA smoke detector
E = CO_2 sensor
F = RA smoke detector & CO_2
G = SA smoke detector & CO_2
H = RA & SA smoke detector & CO_2

Indoor Fan Options
0 = Electric drive X13 motor (04–06)
1 = Standard static option – Belt drive
2 = Medium static option – Belt drive
3 = High static option – Belt drive
C = High static option with High Eff. Motor – Belt Drive (12 only)

Coil Options (Outdoor – Indoor – Hail Guard)
A = Al/Cu – Al/Cu
B = Precoat Al/Cu – Al/Cu
C = E–coat Al/Cu – Al/Cu
D = E–coat Al/Cu – E coat Al/Cu
E = Cu/Cu – Al/Cu
F = Cu/Cu – Cu/Cu
M = Al/Cu – Al/Cu – Louvered Hail Guards
N = Precoat Al/Cu – Al/Cu – Louvered Hail Guards
P = E–coat Al/Cu – Al/Cu – Louvered Hail Guards
Q = E–coat Al/Cu – E–coat Al/Cu – Louvered Hail Guards
R = Cu/Cu – Al/Cu – Louvered Hail Guards
S = Cu/Cu – Cu/Cu – Louvered Hail Guards

Voltage
1 = 575/3/60
3 = 208–230/1/60
5 = 208–230/3/60
6 = 460/3/60

Design Rev
Factory assigned

Base Unit Controls
0 = Electromechanical
1 = PremierLink™ DDC controller
2 = RTU Open multi–protocol DDC controller

Intake / Exhaust Options
A = None
B = Temp econo w/ baro relief
F = Enthalpy econo w/ baro relief
K = 2 position damper

Service Options
0 = None
1 = Unpowered convenience outlet
2 = Powered convenience outlet
3 = Hinged Panels
4 = Hinged Panels Unpowered CO
5 = Hinged Panels Powered CO

Electrical Options
A = None
C = Non–fused disc
D = Thru the base
F = Non–fused & thru the base

Packaging
0 = Standard
1 = LTL

FACTORY OPTIONS AND/OR ACCESSORIES

Table 1 – FACTORY INSTALLED OPTIONS AND FIELD-INSTALLED ACCESSORIES

CATEGORY	ITEM	FACTORY INSTALLED OPTION	FIELD INSTALLED ACCESSORY
Cabinet	Hinged access doors	X	
	Thru–the–base electrical connections	X	X
	Suuply duct kit–Horizontal air applications (size 12 only)		X
Coil Options	Cu/Cu indoor and/or outdoor coils	X	
	Pre–coated outdoor coils	X	
	Premium, E–coated outdoor coils	X	
Condenser Protection	Condenser coil hail guard (louvered design)	X	X
Controls	Thermostats, temperature sensors, and subbases		X
	PremierLink DDC communicating controller	X	X
	RTU Open Multi–protocol controller	X	
	Smoke detector (supply and/or return air)	X	
	Time Guard II compressor delay control circuit		X
	Phase Monitor		X
Economizers & Outdoor Air Dampers	EconoMi$er IV (for electro–mechanical controlled RTUs)	X	X
	EconoMi$er2 (for DDC controlled RTUs)	X	X
	Motorized 2 position outdoor air damper	X	X
	Manual outdoor air damper (25% and 50%)		X
	Barometric relief[1]	X	X
	Power exhaust		X
Economizer Sensors & IAQ Devices	Single dry bulb temperature sensors[2]	X	X
	Differential dry bulb temperature sensors[2]		X
	Single enthalpy sensors[2]	X	X
	Differential enthalpy sensors[2]		X
	CO_2 sensor (wall, duct, or unit mounted)[2]	X	X
Electric Heat	Electric Resistance Heaters		X
	Single Point Kit		X
Indoor Motor & Drive	Multiple motor and belt drive packages	X	
	Electric Drive, X13, 5–speed/torque (3–5 ton)	X	
Low Ambient Control	Motormaster® head pressure controller[3]		X
Power Options	Convenience outlet (powered)	X	
	Convenience outlet (unpowered)	X	
	Non–fused disconnect	X	
Roof Curbs	Roof curb 14–in. (356mm)		X
	Roof curb 24–in. (610mm)		X

NOTES:
1. Included with economizer.
2. Sensors for optimizing economizer.
3. See application data for assistance.

Economizer (dry bulb or enthalpy)

Economizers save money. They bring in fresh, outside air for ventilation; and provide cool, outside air to cool your building. This is the preferred method of low ambient cooling. When coupled to CO_2 sensors, economizers can provide even more savings by coupling the ventilation air to only that amount required.

Economizers are available, installed and tested by the factory, with either enthalpy or dry bulb temperature inputs. There are also models for electromechanical as well as direct digital controllers. Additional sensors are available as accessories to optimize the economizers.

Economizers include gravity controlled, barometric relief which equalizes building pressure and ambient air pressures. This can be a cost effective solution to prevent building pressurization.

CO_2 Sensor

Improves productivity and saves money by working with the economizer to intake only the correct amount of outside air for ventilation. As occupants fill your building, the CO_2 sensor detects their presence through increasing CO_2 levels, and opens the economizer appropriately.

When the occupants leave, the CO_2 levels decrease, and the sensor appropriately closes the economizer. This intelligent control of the ventilation air, called Demand Control Ventilation (DCV) reduces the overall load on the rooftop, saving money.

Smoke Detectors

Trust the experts. Smoke detectors make your application safer and your job easier. Carrier smoke detectors immediately shut down the rooftop unit when smoke is detected. They are available, installed by the factory, for supply air, return air, or both.

Louvered Hail Guards

Sleek, louvered panels protect the condenser coil from hail damage, foreign objects, and incidental contact.

Convenience Outlet (powered or unpowered)

Lower service bills by including a convenience outlet in your specification. Carrier will install this service feature at our factory, powered or unpowered. Provides a convenient, 15 amp, 115V GFCI receptacle.

Non-fused Disconnect

This OSHA-compliant, factory installed, safety switch allows a service technician to locally secure power to the rooftop.

Power Exhaust Pressure Relief

Superior internal building pressure control. This field-installed accessory may eliminate the need for costly, external pressure control fans.

PremierLink

This CCN controller regulates your rooftop's performance to tighter tolerances and expanded limits, as well as facilitates zoning systems and digital accessories. It also unites your Carrier HVAC equipment together on one, coherent CCN network. The PremierLink can be factory installed, or easily field-installed.

RTU Open, Multi-protocol Controller

Connect the rooftop to an existing BAS without needing complicated translators or adapter modules using the RTU Open controller. This new controller speaks the 4 most common building automation system languages (Bacnet, Modbus, N2, and Lonworks). Use this controller when you have an existing BAS.

Time Guard II Control Circuit

This accessory protects your compressor by preventing short-cycling in the event of some other failure, prevents the compressor from restarting for 30 seconds after stopping. Not required with PremierLink, RTU Open, or authorized commercial thermostats.

Motorized 2-Position Damper

The new Carrier 2-position, motorized outdoor air damper admits up to 100% outside air. Using reliable, gear-driven technology, the 2-position damper opens to allow ventilation air and closes when the rooftop stops, stopping unwanted infiltration.

Manual OA Damper

Manual outdoor air dampers are an economical way to bring in ventilation air. The dampers are available in 25% and 50% versions.

Motormaster Head Pressure Controller

The Motormaster motor controller is a low ambient, head pressure controller kit that is designed to maintain the unit's condenser head pressure during periods of low ambient cooling operation. This device should be used as an alternative to economizer free cooling when economizer usage is either not appropriate or desired. The Motormaster will either cycle the outdoor fan motors or operate them at reduced speed to maintain the unit operation, depending on the model.

Alternate Motors and Drives

Some applications need larger horsepower motors, some need more airflow, and some need both. Regardless of the case, your Carrier expert has a factory installed combination to meet your application. A wide selection of motors and pulleys (drives) are available, factory installed, to handle nearly any application.

Thru-the-Base Connections

Thru-the-base connections, available as either an accessory or as a factory option, are necessary to ensure proper connection and seal when routing wire and piping through the rooftop's basepan and curb. These couplings eliminate roof penetration and should be considered for main power lines, as well as control power.

Electric Heaters

Carrier offers a full line of field-installed accessory heaters. The heaters are very easy to use and install. All are pre-engineered and certified.

Hinged Access Panels

Allows access to unit's major components with specifically designed hinged access panels. Panels are: filter, control box, fan motor and compressor.

Table 2 – AHRI COOLING RATING TABLES

COOLING MODE						
UNIT	NOM. CAPACITY (TONS)	NET COOLING CAPACITY (BTUH)	TOTAL POWER (kW)	SEER	EER	IEER
A04	3	36,400	2.8	15.60	12.70	N/A
A05	4	47,000	3.6	15.80	12.80	N/A
A06	5	58,500	4.6	15.00	12.50	N/A
A07	6	72,000	6.0	N/A	12.00	12.8
D08	7.5	90,000	7.4	N/A	12.10	12.8
D09	8.5	100,000	8.3	N/A	12.00	12.5
D12	10	119,000	9.8	N/A	12.30	13.0

NA Not applicable

HEATING MODE					
UNIT	HSPF	HEATING, LOW		HEATING, HIGH	
		CAPACITY (BTUH)	COP	CAPACITY (BTUH)	COP
A04	8.00	18,400	N/A	34,000	N/A
A05	8.10	23,800	N/A	46,000	N/A
A06	8.20	28,600	N/A	55,000	N/A
A07	n/a	39,000	2.40	70,000	3.40
D08	n/a	47,000	2.40	84,000	3.50
D09	n/a	56,000	2.26	100,000	3.40
D12	n/a	65,000	2.40	116,000	3.50

LEGEND

AHRI – Air Conditioning, Heating and Refrigeration Institute
ASHRAE – American Society of Heating, Refrigerating and Air Conditioning, Inc.
COP – Coefficient of Performance
EER – Energy Efficiency Ratio
HSPF – Heating Seasonal Performance Factor
IEER – Integrated Energy Efficiency Ratio
SEER – Seasonal Energy Efficiency Ratio

NOTES:

1. Rated and certified under AHRI Standard 210/240 or 340/360, as appropriate.
2. Ratings are based on:
   Cooling Standard: 80°F (27°C) db, 67°F (19°C) wb indoor air temp and 95°F db outdoor air temp.
   IEER Standard: A measure that expresses cooling part–load EER efficiency for commercial unitary air conditioning and heat pump equipment on the basis of weighted operation at variable load capacities.
3. All 50HCQ units comply with ASHRAE 90.1 Energy Standard for minimum SEER and EER requirements.

Table 3 – MINIMUM - MAXIMUM AIRFLOWS ELECTRIC HEAT

UNIT	COOLING		ELECTRIC HEATERS	
	MINIMUM	MAXIMUM	MINIMUM	MAXIMUM
50HCQA04	900	1500	900	1500
50HCQA05	1200	2000	1200	2000
50HCQA06	1500	2500	1500	2500
50HCQA07	1800	3000	1800	3000
50HCQD08	2250	3750	2250*	3750
50HCQD09	2550	4250	2552*	4250
50HCQD12	3000	5000	3000*	5000

*Minimum electric heat CFM exceptions :

UNIT	UNIT VOLTAGE	HEATER kW	UNIT CONFIGURATION	REQUIRED MINIMUM CFM
50HCQD08 50HCQD09	575	17.0	Horizontal or Vertical	2800
		34.0		2350
50HCQD12	230	50.0	Vertical	3550
			Horizontal	3420
		43.5	Horizontal or Vertical	3040
	575	50.0	Vertical	3150
		33.5		3520
			Horizontal	3420
		26.5	Vertical	3610

Table 4 – SOUND PERFORMANCE TABLE

50HCQ	OUTDOOR SOUND (dB)								
	A–WEIGHTED	63	125	250	500	1000	2000	4000	8000
A04	76	51.8	69.0	64.6	67.8	70.7	63.8	60.9	59.0
A05	79	56.1	69.6	68.7	72.5	72.8	68.9	65.0	61.2
A06	79	57.7	66.6	68.7	72.9	74.5	71.1	67.6	62.6
A07	81	86.7	82.7	79.1	78.4	75.4	71.2	67.8	62.9
D08	83	87.3	81.6	79.7	80.6	79.0	73.5	69.2	66.1
D09	87	61.7	74.7	77.4	82.6	84.9	81.9	78.8	75.9
D12	83	61.0	67.3	75.1	77.7	78.1	75.5	71.2	66.7

LEGEND

dB – Decibel

NOTES:

1. Outdoor sound data is measured in accordance with AHRI standard 270–95.
2. Measurements are expressed in terms of sound power. Do not compare these values to sound pressure values because sound pressure accounts for specific environmental factors which do not match individual applications. Sound power values are independent of the environment and therefore more accurate.
3. A–weighted sound ratings filter out very high and very low frequencies, to better approximate the response of an “average” human ear. A–weighted measurements for Carrier units are taken in accordance with 270–95.

Table 5 – PHYSICAL DATA (COOLING) 3 - 6 TONS

	50HCQA04	50HCQA05	50HCQA06	50HCQA07
Refrigeration System				
# Circuits / # Comp. / Type	1 / 1 / Scroll	1 / 1 / Scroll	1 / 1 / Scroll	1 / 1 / Scroll
Refrig. charge per circuit A/B(lbs–oz)	12 – 8 / –	15 – 8 / –	17 – 8 / –	15 – 8 / –
Metering Device	TXV	TXV	TXV	TXV
High pressure Trip / Reset (psig)	630 / 505	630 / 505	630 / 505	630 / 505
Loss of Charge Press. Trip / Reset (psig)	27 / 44	27 / 44	27 / 44	27 / 44
Compressor Capacity Staging (%)	100	100	100	100
Evap. Coil				
Material – Tube / Fin	Cu / Al	Cu / Al	Cu / Al	Cu / Al
Coil type	3/8” RTPF	3/8” RTPF	3/8” RTPF	3/8” RTPF
Rows / FPI	3 / 15	3 / 15	4/ 15	3/ 15
Total Face Area (ft^2)	5.5	7.3	7.3	8.9
Condensate Drain Conn. Size	3/4”	3/4”	3/4”	3/4”
Evap. Fan and Motor				
Standard Static 1 phase				
Motor Qty / Drive Type	1 / Direct	1 / Direct	1 / Direct	N/A
Max BHP	1.0	1.0	1.0	N/A
RPM Range	600–1200	600–1200	600–1200	N/A
Motor Frame Size	48	48	48	N/A
Fan Qty / Type	1 / Centrifugal	1 / Centrifugal	1 / Centrifugal	N/A
Fan Diameter x Length (in)	10 x 10	10 x 10	11 x 10	N/A
Standard Static 3 phase				
Motor Qty / Drive Type	1 / Direct	1 / Direct	1 / Direct	1 / Belt
Max BHP	1.0	1.0	1.0	1.2
RPM Range	600–1200	600–1200	600–1200	489–747
Motor Frame Size	48	48	48	56
Fan Qty / Type	1 / Centrifugal	1 / Centrifugal	1 / Centrifugal	1 / Centrifugal
Fan Diameter x Length (in)	10 x 10	10 x 10	11 x 10	15 x 15
Medium Static 3 phase				
Motor Qty / Drive Type	1 / Belt	1 / Belt	1 / Belt	1 / Belt
Max BHP	1.5	1.5	2.0	2.9
RPM Range	819–1251	920–1303	1066–1380	733–949
Motor Frame Size	56	56	56	56
Fan Qty / Type	1 / Centrifugal	1 / Centrifugal	1 / Centrifugal	1 / Centrifugal
Fan Diameter x Length (in)	10 x 10	10 x 10	10 x 10	15 x 15
High Static 3 phase				
Motor Qty / Drive Type	1 / Belt	1 / Belt	1 / Belt	1 / Belt
Max BHP	2.0	2.0	2.9	4.0
RPM Range	1035–1466	1035–1466	1208–1639	909–1102
Motor Frame Size	56	56	56	145
Fan Qty / Type	1 / Centrifugal	1 / Centrifugal	1 / Centrifugal	1 / Centrifugal
Fan Diameter x Length (in)	10 x 10	10 x 10	10 x 10	15 x 15
Cond. Coil				
Material – Tube / Fin	Cu / Al	Cu / Al	Cu / Al	Cu / Al
Coil type	3/8” RTPF	3/8” RTPF	3/8” RTPF	3/8” RTPF
Rows / FPI	2 / 17	2 / 17	2 / 17	2 / 17
Total Face Area (ft^2)	16.5	21.3	21.3	20.5
Cond. fan / motor				
Qty / Motor Drive Type	1 / direct	1 / direct	1 / direct	2 / direct
Motor HP / RPM	1/8 / 825	1/4 / 1100	1/4 / 1100	1/4 / 1100
Fan diameter (in)	22	22	22	22
Filters				
RA Filter # / Size (in)	2 / 16 x 25 x 2	4 / 16 x 16 x 2	4 / 16 x 16 x 2	4 / 16 x 20 x 2
OA inlet screen # / Size (in)	1 / 20 x 24 x 1	1 / 20 x 24 x 1	1 / 20 x 24 x 1	1 / 20 x 36 x 1

Table 6 – PHYSICAL DATA (COOLING) 7.5 - 10 TONS

	50HCQD08	50HCQD09	50HCQD12
Refrigeration System			
# Circuits / # Comp. / Type	2 / 2 / Scroll	2 / 2 / Scroll	2 / 2 / Scroll
Refrig. charge per circuit A/B (lbs–oz)	11 – 12 / 11 – 12	14–1/14–4	16–3/17–3
Metering Device	TXV	TXV	TXV
High pressure Trip / Reset (psig)	630 / 505	630 / 505	630 / 505
Loss of Charge Press. Trip / Reset (psig)	27 / 44	27 / 44	27 / 44
Compressor Capacity Staging (%)	50 / 100	50 / 100	50 / 100
Evap. Coil			
Material – Tube / Fin	Cu / Al	Cu / Al	Cu / Al
Coil type	3/8” RTPF	3/8” RTPF	3/8” RTPF
Rows / FPI	4 / 15	4 / 15	3 / 15
Total Face Area (ft^2)	11.1	11.1	17.3
Condensate Drain Conn. Size	3/4”	3/4”	3/4”
Evap. Fan and Motor			
Standard Static 3 phase			
Motor Qty / Drive Type	1 / Belt	1 / Belt	1 / Belt
Max BHP	1.2	1.2	2.4
RPM Range	518–733	460–652	440–609
Motor Frame Size	56	56	56
Fan Qty / Type	1 / Centrifugal	1 / Centrifugal	1 / Centrifugal
Fan Diameter x Length (in)	15 x 15	15 x 15	18 x 18
Medium Static 3 phase			
Motor Qty / Drive Type	1 / Belt	1 / Belt	1 / Belt
Max BHP	1.7	2.9	2.9
RPM Range	690–936	591–838	547–757
Motor Frame Size	56	56	56
Fan Qty / Type	1 / Centrifugal	1 / Centrifugal	1 / Centrifugal
Fan Diameter x Length (in)	15 x 15	15 x 15	18 x 18
High Static 3 phase			
Motor Qty / Drive Type	1 / Belt	1 / Belt	1 / Belt
Max BHP	2.8	2.9	6.1
RPM Range	838–1084	838–1084	762–963
Motor Frame Size	56	56	S184T
Fan Qty / Type	1 / Centrifugal	1 / Centrifugal	1 / Centrifugal
Fan Diameter x Length (in)	15 x 15	15 x 15	18 x 18
High Static High Efficiency 3 phase*			
Motor Qty / Drive Type	N/A	N/A	1 / Belt
Max BHP	N/A	N/A	6.1
RPM Range	N/A	N/A	762–963
Motor Frame Size	N/A	N/A	S184T
Fan Qty / Type	N/A	N/A	1 / Centrifugal
Fan Diameter x Length (in)	N/A	N/A	18 x 18
Cond. Coil			
Material – Tube / Fin	Cu / Al	Cu / Al	Cu / Al
Coil type	3/8” RTPF	3/8” RTPF	3/8” RTPF
Rows / FPI	2 / 17	3 / 17	2 / 17
Total Face Area (ft^2)	25.1	25.1	46.2
Cond. fan / motor			
Qty / Motor Drive Type	2 / direct	1 / direct	3 / direct
Motor HP / RPM	1/4 / 1100	1 / 1175	1 / 1100
Fan diameter (in)	22	30	22
Filters			
RA Filter # / Size (in)	4 / 20 x 20 x 2	4 / 20 x 20 x 2	6 / 18 x 24 x 2
OA inlet screen # / Size (in)	1 / 20 x 24 x 1	1 / 20 x 24 x 1	2 / 24 x 27 x 1 (Vert) 1 / 30 x 39 x 1 (Horiz)

* Section 313 of the Energy Independence and Security Act of 2007 (EISA 2007) mandates that the efficiency of general purpose motors we use in our Light Commercial Rooftops rated at 5.0 HP and larger be increased on or after December 19, 2010. We will offer both high and standard efficient motors until inventory is depleted and then shift over solely to the high efficient motors only.

Table 7 – ELECTRIC HEAT - ELECTRICAL DATA **3 TONS**

UNIT	NOM. V–PH–HZ	IFM TYPE	ELECTRIC HEATER PART NUMBER CRHEATERXXXXXX	NOM PWR (kW)	APP PWR (kW)	SINGLE POINT KIT PART NUMBER CRSINGLEXXXXXX			
						WITHOUT C.O. or UNPWRD C.O.		WITH PWRD C.O.	
						WITHOUT P.E.	WITH P.E.	WITHOUT P.E.	WITH P.E.
50HCQA04	208/230–1–60	STD DD	101A00	4.4	3.3/4.0	037	037	037	037
			102A00	6.5	4.9/6.0	040	040	040	040
			103B00	8.7	6.5/8.0	040	040	040	040
			104B00	10.5	7.9/9.6	040	040	040	040
			102A00,102A00	13.0	9.8/11.9	041	041	041	041
	208/230–3–60	STD DD	101A00	4.4	3.3/4.0	–	–	–	–
			102A00	6.5	4.9/6.0	–	–	–	–
			103B00	8.7	6.5/8.0	–	–	037	037
			104B00	10.5	7.9/9.6	037	037	037	037
			105A00	16.0	12.0/14.7	038	038	038	038
		MED	101A00	4.4	3.3/4.0	–	–	–	–
			102A00	6.5	4.9/6.0	–	–	–	–
			103B00	8.7	6.5/8.0	–	–	–	037
			104B00	10.5	7.9/9.6	037	037	037	037
			105A00	16.0	12.0/14.7	038	038	038	038
		HIGH	101A00	4.4	3.3/4.0	–	–	–	–
			102A00	6.5	4.9/6.0	–	–	–	–
			103B00	8.7	6.5/8.0	–	–	–	037
			104B00	10.5	7.9/9.6	037	037	037	037
			105A00	16.0	12.0/14.7	038	038	038	038
	460–3–60	STD DD	106A00	6.0	5.5	–	–	–	–
			107A00	8.8	8.1	–	–	–	–
			108A00	11.5	10.6	–	–	–	–
			109A00	14.0	12.9	–	–	–	–
		MED	106A00	6.0	5.5	–	–	–	–
			107A00	8.8	8.1	–	–	–	–
			108A00	11.5	10.6	–	–	–	–
			109A00	14.0	12.9	–	–	–	–
		HIGH	106A00	6.0	5.5	–	–	–	–
			107A00	8.8	8.1	–	–	–	–
			108A00	11.5	10.6	–	–	–	–
			109A00	14.0	12.9	–	–	–	–

– No Single Point Kit required

LEGEND

APP PWR – 208 / 230V / 460V / 575V
BD – Belt drive motor
C.O. – Convenience outlet
DD – Electric Drive X13 5 speed/torque motor
FLA – Full load amps
IFM – Indoor fan motor
NOM PWR – 240V / 480V / 600V
P.E. – Power exhaust
PWRD – Powered convenience outlet
UNPWRD – Unpowered convenience outlet

Table 8 – ELECTRIC HEAT - ELECTRICAL DATA **4 TONS**

UNIT	NOM. V–PH–HZ	IFM TYPE	ELECTRIC HEATER PART NUMBER CRHEATERXXXXXX	NOM PWR (kW)	APP PWR (kW)	SINGLE POINT KIT PART NUMBER CRSINGLEXXXXXX			
						WITHOUT C.O. or UNPWRD C.O.		WITH PWRD C.O.	
						WITHOUT P.E.	WITH P.E.	WITHOUT P.E.	WITH P.E.
50HCQA05	208/230–1–60	STD DD	101A00	4.4	3.3/4.0	037	037	040	040
			103B00	8.7	6.5/8.0	040	040	040	040
			102A00,102A00	13.0	9.8/11.9	041	041	041	041
			103B00,103B00	17.4	13.1/16.0	041	041	041	041
			104B00,104B00	21.0	15.8/19.3	041	041	041	041
	208/230–3–60	STD DD	102A00	6.5	4.9/6.0	–	–	–	037
			103B00	8.7	6.5/8.0	037	037	037	037
			105A00	16.0	12.0/14.7	038	038	038	038
			104B00,104B00	21.0	15.8/19.3	039	039	039	039
		MED	102A00	6.5	4.9/6.0	–	–	–	–
			103B00	8.7	6.5/8.0	–	037	037	037
			105A00	16.0	12.0/14.7	038	038	038	038
			104B00,104B00	21.0	15.8/19.3	039	039	039	039
		HIGH	102A00	6.5	4.9/6.0	–	–	–	–
			103B00	8.7	6.5/8.0	–	037	037	037
			105A00	16.0	12.0/14.7	038	038	038	038
			104B00,104B00	21.0	15.8/19.3	039	039	039	039
	460–3–60	STD DD	106A00	6.0	5.5	–	–	–	–
			108A00	11.5	10.6	–	–	–	–
			109A00	14.0	12.9	–	–	–	–
			108A00,108A00	23.0	21.1	037	037	037	037
		MED	106A00	6.0	5.5	–	–	–	–
			108A00	11.5	10.6	–	–	–	–
			109A00	14.0	12.9	–	–	–	–
			108A00,108A00	23.0	21.1	037	037	037	037
		HIGH	106A00	6.0	5.5	–	–	–	–
			108A00	11.5	10.6	–	–	–	–
			109A00	14.0	12.9	–	–	–	–
			108A00,108A00	23.0	21.1	037	037	037	037

– No Single Point Kit required

LEGEND

APP PWR – 208 / 230V / 460V / 575V
BD – Belt drive motor
C.O. – Convenience outlet
DD – Electric Drive X13 5 speed/torque motor
FLA – Full load amps
IFM – Indoor fan motor
NOM PWR – 240V / 480V / 600V
P.E. – Power exhaust
PWRD – Powered convenience outlet
UNPWRD – Unpowered convenience outlet

Table 9 – ELECTRIC HEAT - ELECTRICAL DATA 5 TONS

UNIT	NOM. V–PH–HZ	IFM TYPE	ELECTRIC HEATER PART NUMBER CRHEATERXXXXXX	NOM PWR (kW)	APP PWR (kW)	SINGLE POINT KIT PART NUMBER CRSINGLEXXXXXX			
						WITHOUT C.O. or UNPWRD C.O.		WITH PWRD C.O.	
						WITHOUT P.E.	WITH P.E.	WITHOUT P.E.	WITH P.E.
50HCQA06	208/230–1–60	STD DD	102A00	6.5	4.9/6.0	040	040	040	040
			103B00	8.7	6.5/8.0	040	040	040	040
			102A00,102A00	13.0	9.8/11.9	041	041	041	041
			103B00,103B00	17.4	13.1/16.0	041	041	041	041
			104B00,104B00	21.0	15.8/19.3	041	041	041	041
	208/230–3–60	STD DD	102A00	6.5	4.9/6.0	–	–	037	037
			104B00	10.5	7.9/9.6	038	038	038	038
			105A00	16.0	12.0/14.7	038	038	038	038
			104B00,104B00	21.0	15.8/19.3	039	039	039	039
			104B00,105A00	26.5	19.9/24.3	039	039	039	039
		MED	102A00	6.5	4.9/6.0	–	–	037	037
			104B00	10.5	7.9/9.6	037	037	038	038
			105A00	16.0	12.0/14.7	038	038	038	038
			104B00,104B00	21.0	15.8/19.3	039	039	039	039
			104B00,105A00	26.5	19.9/24.3	039	039	039	039
		HIGH	102A00	6.5	4.9/6.0	–	–	037	037
			104B00	10.5	7.9/9.6	038	038	038	038
			105A00	16.0	12.0/14.7	038	038	038	038
			104B00,104B00	21.0	15.8/19.3	039	039	039	039
			104B00,105A00	26.5	19.9/24.3	039	039	039	039
	460–3–60	STD DD	106A00	6.0	5.5	–	–	–	–
			108A00	11.5	10.6	–	–	–	–
			109A00	14.0	12.9	–	–	–	–
			108A00,108A00	23.0	21.1	037	037	037	037
			108A00,109A00	25.5	23.4	037	037	037	037
		MED	106A00	6.0	5.5	–	–	–	–
			108A00	11.5	10.6	–	–	–	–
			109A00	14.0	12.9	–	–	–	–
			108A00,108A00	23.0	21.1	037	037	037	037
			108A00,109A00	25.5	23.4	037	037	037	037
		HIGH	106A00	6.0	5.5	–	–	–	–
			108A00	11.5	10.6	–	–	–	–
			109A00	14.0	12.9	–	–	–	–
			108A00,108A00	23.0	21.1	037	037	037	037
			108A00,109A00	25.5	23.4	037	037	037	037

– No Single Point Kit required

LEGEND

APP PWR – 208 / 230V / 460V / 575V
BD – Belt drive motor
C.O. – Convenience outlet
DD – Electric Drive X13 5 speed/torque motor
FLA – Full load amps
IFM – Indoor fan motor
NOM PWR – 240V / 480V / 600V
P.E. – Power exhaust
PWRD – Powered convenience outlet
UNPWRD – Unpowered convenience outlet

Table 10 – ELECTRIC HEAT - ELECTRICAL DATA **6 TONS**

UNIT	NOM. V–PH–HZ	IFM TYPE	ELECTRIC HEATER PART NUMBER CRHEATERXXXXXX	NOM PWR (kW)	APP PWR (kW)	SINGLE POINT KIT PART NUMBER CRSINGLEXXXXXX			
						WITHOUT C.O. or UNPWRD C.O.		WITH PWRD C.O.	
						WITHOUT P.E.	WITH P.E.	WITHOUT P.E.	WITH P.E.
50HCQA07	208/230–3–60	STD	264A00	6.5	4.9/6.0	042	042	042	045
			117A00	10.4	7.8/9.6	043	043	043	043
			110A00	16.0	12.0/14.7	043	043	043	043
			117A00,117A00	21.0	15.8/19.3	045	045	045	045
			110A00,117A00	26.5	19.9/24.3	045	045	045	045
		MED	264A00	6.5	4.9/6.0	042	042	042	045
			117A00	10.4	7.8/9.6	043	043	043	043
			110A00	16.0	12.0/14.7	043	043	043	043
			117A00,117A00	21.0	15.8/19.3	045	045	045	045
			110A00,117A00	26.5	19.9/24.3	045	045	045	045
		HIGH	264A00	6.5	4.9/6.0	045	045	045	045
			117A00	10.4	7.8/9.6	043	043	043	043
			110A00	16.0	12.0/14.7	043	043	043	043
			117A00,117A00	21.0	15.8/19.3	045	045	045	045
			110A00,117A00	26.5	19.9/24.3	045	045	045	045
	460–3–60	STD	265A00	6.0	5.5	042	042	042	042
			266A00	11.5	10.6	042	042	042	042
			267A00	14.0	12.9	042	042	042	042
			268A00	23.0	21.1	042	042	042	042
			269A00	25.5	23.4	042	042	042	042
		MED	265A00	6.0	5.5	042	042	042	042
			266A00	11.5	10.6	042	042	042	042
			267A00	14.0	12.9	042	042	042	042
			268A00	23.0	21.1	042	042	042	042
			269A00	25.5	23.4	042	042	042	042
		HIGH	265A00	6.0	5.5	042	042	042	042
			266A00	11.5	10.6	042	042	042	042
			267A00	14.0	12.9	042	042	042	042
			268A00	23.0	21.1	042	042	042	042
			269A00	25.5	23.4	042	048	048	048

– No Single Point Kit required

LEGEND

APP PWR – 208 / 230V / 460V / 575V
C.O. – Convenience outlet
FLA – Full load amps
IFM – Indoor fan motor
NOM PWR – 240V / 480V / 600V
P.E. – Power exhaust
PWRD – Powered convenience outlet
UNPWRD – Unpowered convenience outlet

Table 11 – ELECTRIC HEAT - ELECTRICAL DATA 7.5 TONS

UNIT	NOM. V–PH–HZ	IFM TYPE	ELECTRIC HEATER PART NUMBER CRHEATERXXXXXX	NOM PWR (kW)	APP PWR (kW)	SINGLE POINT KIT PART NUMBER CRSINGLEXXXXXX			
						WITHOUT C.O. or UNPWRD C.O.		WITH PWRD C.O.	
						WITHOUT P.E.	WITH P.E.	WITHOUT P.E.	WITH P.E.
50HCQD08 (2–STAGE COOL)	208/230–3–60	STD	117A00	10.4	7.8/9.6	049	049	049	049
			110A00	16.0	12.0/14.7	049	049	049	049
			111A00	24.8	18.6/22.8	051	051	051	051
			112A00	32.0	24.0/29.4	051	051	051	051
			112A00,117A00	42.4	31.8/38.9	053	053	053	053
		MED	117A00	10.4	7.8/9.6	049	049	049	049
			110A00	16.0	12.0/14.7	049	049	049	049
			111A00	24.8	18.6/22.8	051	051	051	051
			112A00	32.0	24.0/29.4	051	051	051	051
			112A00,117A00	42.4	31.8/38.9	053	053	053	053
		HIGH	117A00	10.4	7.8/9.6	049	049	049	049
			110A00	16.0	12.0/14.7	049	049	049	049
			111A00	24.8	18.6/22.8	051	051	051	051
			112A00	32.0	24.0/29.4	051	051	051	051
			112A00,117A00	42.4	31.8/38.9	053	053	053	053
	460–3–60	STD	116A00	13.9	12.8	047	047	047	047
			113A00	16.5	15.2	047	047	047	047
			114A00	27.8	25.5	047	050	050	050
			115A00	33.0	30.3	050	050	050	050
			114A00,116A00	41.7	38.3	052	052	052	052
		MED	116A00	13.9	12.8	047	047	047	047
			113A00	16.5	15.2	047	047	047	047
			114A00	27.8	25.5	047	050	050	050
			115A00	33.0	30.3	050	050	050	050
			114A00,116A00	41.7	38.3	052	052	052	052
		HIGH	116A00	13.9	12.8	047	047	047	047
			113A00	16.5	15.2	047	047	047	047
			114A00	27.8	25.5	050	050	050	050
			115A00	33.0	30.3	050	050	050	050
			114A00,116A00	41.7	38.3	052	052	052	052
	575–3–60	STD	118A00	17.0	17.0	047	047	047	047
			119A00	34.0	34.0	050	050	050	050
		MED	118A00	17.0	17.0	047	047	047	047
			119A00	34.0	34.0	050	050	050	050
		HIGH	118A00	17.0	17.0	047	047	047	047
			119A00	34.0	34.0	050	050	050	050

– No Single Point Kit required

LEGEND

APP PWR – 208 / 230V / 460V / 575V
C.O. – Convenience outlet
FLA – Full load amps
IFM – Indoor fan motor
NOM PWR – 240V / 480V / 600V
P.E. – Power exhaust
PWRD – Powered convenience outlet
UNPWRD – Unpowered convenience outlet

Table 12 – ELECTRIC HEAT - ELECTRICAL DATA 8.5 TONS

UNIT	NOM. V–PH–HZ	IFM TYPE	ELECTRIC HEATER PART NUMBER CRHEATERXXXXXX	NOM PWR (kW)	APP PWR (kW)	SINGLE POINT KIT PART NUMBER CRSINGLEXXXXXX			
						WITHOUT C.O. or UNPWRD C.O.		WITH PWRD C.O.	
						WITHOUT P.E.	WITH P.E.	WITHOUT P.E.	WITH P.E.
50HCQD09 (2 STAGE COOL)	208/230–3–60	STD	117A00	10.4	7.8/9.6	049	049	049	049
			110A00	16.0	12.0/14.7	049	049	049	049
			111A00	24.8	18.6/22.8	051	051	051	051
			112A00	32.0	24.0/29.4	051	051	051	051
			112A00,117A00	42.4	31.8/38.9	053	053	053	053
		MED	117A00	10.4	7.8/9.6	049	049	049	051
			110A00	16.0	12.0/14.7	049	049	049	051
			111A00	24.8	18.6/22.8	051	051	051	053
			112A00	32.0	24.0/29.4	051	051	051	053
			112A00,117A00	42.4	31.8/38.9	053	053	053	054
		HIGH	117A00	10.4	7.8/9.6	049	049	049	051
			110A00	16.0	12.0/14.7	049	049	049	051
			111A00	24.8	18.6/22.8	051	051	051	053
			112A00	32.0	24.0/29.4	051	051	051	053
			112A00,117A00	42.4	31.8/38.9	053	053	053	054
	460–3–60	STD	116A00	13.9	12.8	047	047	047	047
			113A00	16.5	15.2	047	047	047	047
			114A00	27.8	25.5	050	050	050	050
			115A00	33.0	30.3	050	050	050	050
			114A00,116A00	41.7	38.3	052	052	052	052
		MED	116A00	13.9	12.8	047	047	047	047
			113A00	16.5	15.2	047	047	047	047
			114A00	27.8	25.5	050	050	050	050
			115A00	33.0	30.3	050	050	050	050
			114A00,116A00	41.7	38.3	052	052	052	052
		HIGH	116A00	13.9	12.8	047	047	047	047
			113A00	16.5	15.2	047	047	047	047
			114A00	27.8	25.5	050	050	050	050
			115A00	33.0	30.3	050	050	050	050
			114A00,116A00	41.7	38.3	052	052	052	052
	575–3–60	STD	118A00	17.0	17.0	047	047	047	047
			119A00	34.0	34.0	050	050	050	050
		MED	118A00	17.0	17.0	047	047	047	047
			119A00	34.0	34.0	050	050	050	050
		HIGH	118A00	17.0	17.0	047	047	047	047
			119A00	34.0	34.0	050	050	050	050

– No Single Point Kit required

LEGEND

APP PWR – 208 / 230V / 460V / 575V
C.O. – Convenience outlet
FLA – Full load amps
IFM – Indoor fan motor
NOM PWR – 240V / 480V / 600V
P.E. – Power exhaust
PWRD – Powered convenience outlet
UNPWRD – Unpowered convenience outlet

Table 13 – ELECTRIC HEAT - ELECTRICAL DATA 10 TONS

UNIT	NOM. V–PH–HZ	IFM TYPE	ELECTRIC HEATER PART NUMBER CRHEATERXXXXXX	NOM PWR (kW)	APP PWR (kW)	SINGLE POINT KIT PART NUMBER CRSINGLEXXXXXX			
						WITHOUT C.O. or UNPWRD C.O.		WITH PWRD C.O.	
						WITHOUT P.E.	WITH P.E.	WITHOUT P.E.	WITH P.E.
50HCQD12 (2 STAGE)	208/230–3–60	STD	288A00	10.0	7.5/9.2	049	049	049	049
			291A00	16.5	12.4/15.2	049	049	049	049
			294A00	33.5	25.2/30.8	051	051	051	051
			288A00,294A00	43.5	32.7/40.0	053	053	053	053
			291A00,294A00	50.0	37.6/45.9	053	053	053	053
		MED	288A00	10.0	7.5/9.2	049	049	049	051
			291A00	16.5	12.4/15.2	049	049	049	051
			294A00	33.5	25.2/30.8	051	051	051	053
			288A00,294A00	43.5	32.7/40.0	053	053	053	054
			291A00,294A00	50.0	37.6/45.9	053	053	053	054
		HIGH	288A00	10.0	7.5/9.2	051	051	051	051
			291A00	16.5	12.4/15.2	051	051	051	051
			294A00	33.5	25.2/30.8	053	053	053	053
			288A00,294A00	43.5	32.7/40.0	054	054	054	054
			291A00,294A00	50.0	37.6/45.9	054	054	054	054
		HIGH – High Eff.	288A00	10.0	7.5/9.2	051	051	051	051
			291A00	16.5	12.4/15.2	051	051	051	051
			294A00	33.5	25.2/30.8	053	053	053	053
			288A00,294A00	43.5	32.7/40.0	054	054	054	054
			291A00,294A00	50.0	37.6/45.9	054	054	054	054
50HCQD12 (2 STAGE)	460–3–60	STD	289A00	10.0	9.2	047	047	047	047
			292A00	16.5	15.2	047	047	047	047
			295A00	33.5	30.8	050	050	050	050
			289A00,295A00	43.5	40.0	052	052	052	052
			292A00,295A00	50.0	45.9	052	052	052	052
		MED	289A00	10.0	9.2	047	047	047	047
			292A00	16.5	15.2	047	047	047	047
			295A00	33.5	30.8	050	050	050	050
			289A00,295A00	43.5	40.0	052	052	052	052
			292A00,295A00	50.0	45.9	052	052	052	052
		HIGH	289A00	10.0	9.2	047	047	047	047
			292A00	16.5	15.2	047	047	047	047
			295A00	33.5	30.8	050	050	050	050
			289A00,295A00	43.5	40.0	052	052	052	052
			292A00,295A00	50.0	45.9	052	052	052	052
		HIGH – High Eff.	289A00	10.0	9.2	047	047	047	047
			292A00	16.5	15.2	047	047	047	047
			295A00	33.5	30.8	050	050	050	050
			289A00,295A00	43.5	40.0	052	052	052	052
			292A00,295A00	50.0	45.9	052	052	052	052

– No Single Point Kit required

LEGEND

APP PWR – 208 / 230V / 460V / 575V
C.O. – Convenience outlet
FLA – Full load amps
IFM – Indoor fan motor
NOM PWR – 240V / 480V / 600V
P.E. – Power exhaust
PWRD – Powered convenience outlet
UNPWRD – Unpowered convenience outlet

Table 13 - ELECTRIC HEAT - ELECTRICAL DATA (Cont.) **10 TONS**

UNIT	NOM. V–PH–HZ	IFM TYPE	ELECTRIC HEATER PART NUMBER CRHEATERXXXXXX	NOM PWR (kW)	APP PWR (kW)	SINGLE POINT KIT PART NUMBER CRSINGLEXXXXXX			
						WITHOUT C.O. or UNPWRD C.O.		WITH PWRD C.O.	
						WITHOUT P.E.	WITH P.E.	WITHOUT P.E.	WITH P.E.
50HCQD12 (2 STAGE)	575–3–60	STD	290A00	10.0	9.2	047	047	047	047
			293A00	16.5	15.2	047	047	047	047
			296A00	33.5	30.8	047	050	047	050
			290A00,296A00	43.5	40.0	052	052	052	052
			293A00,296A00	50.0	45.9	052	052	052	052
		MED	290A00	10.0	9.2	047	047	047	047
			293A00	16.5	15.2	047	047	047	047
			296A00	33.5	30.8	047	050	047	050
			290A00,296A00	43.5	40.0	052	052	052	052
			293A00,296A00	50.0	45.9	052	052	052	052
		HIGH	290A00	10.0	9.2	047	047	047	047
			293A00	16.5	15.2	047	047	047	047
			296A00	33.5	30.8	050	050	050	050
			290A00,296A00	43.5	40.0	052	052	052	052
			293A00,296A00	50.0	45.9	052	052	052	052
		HIGH – High Eff.	290A00	10.0	9.2	047	047	047	047
			293A00	16.5	15.2	047	047	047	047
			296A00	33.5	30.8	050	050	050	050
			290A00,296A00	43.5	40.0	052	052	052	052
			293A00,296A00	50.0	45.9	052	052	052	052

– No Single Point Kit required

LEGEND

APP PWR – 208 / 230V / 460V / 575V
C.O. – Convenience outlet
FLA – Full load amps
IFM – Indoor fan motor
NOM PWR – 240V / 480V / 600V
P.E. – Power exhaust
PWRD – Powered convenience outlet
UNPWRD – Unpowered convenience outlet

WEIGHTS & DIMENSIONS

NOTES:

1. DIMENSIONS ARE IN INCHES, DIMENSIONS IN [ ] ARE IN MILLIMETERS.
2. CENTER OF GRAVITY
3. DIRECTION OF AIR FLOW

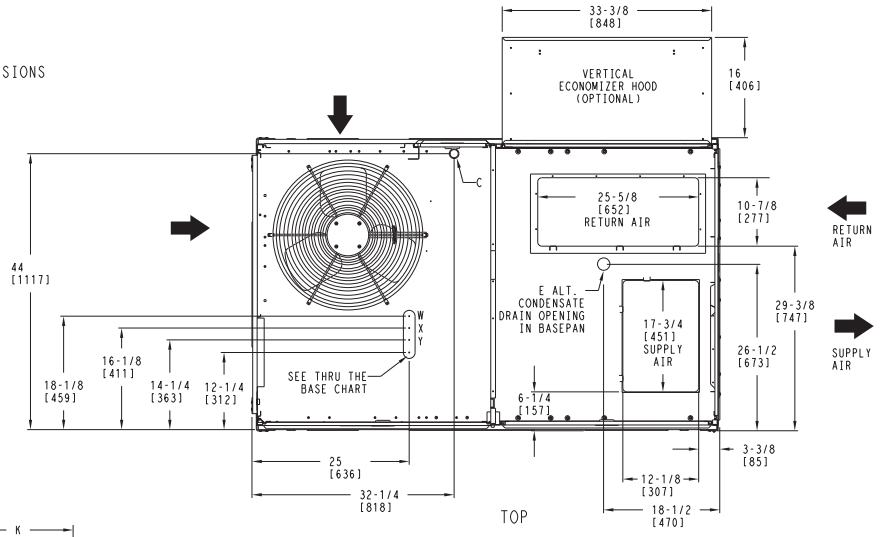

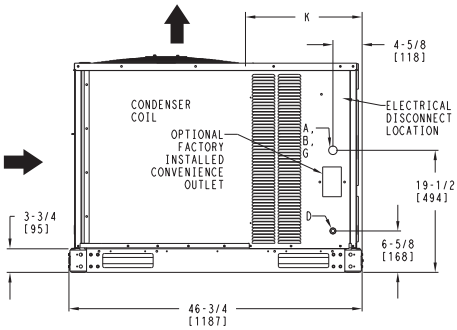

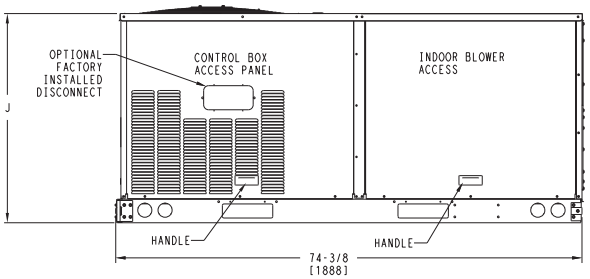

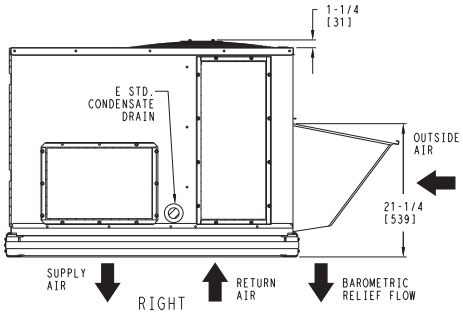

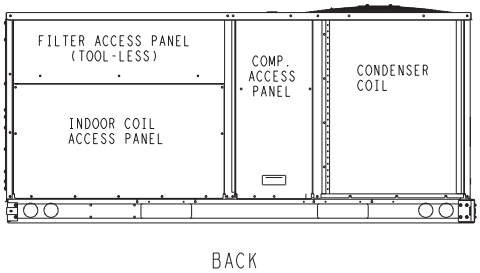

Vertical Connections / Economizer

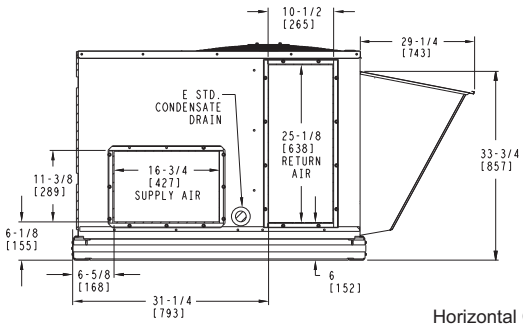

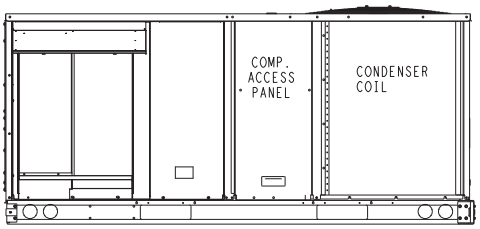

Horizontal Connections / Economizer

	CONNECTION SIZES
A	1 3/8" [35] DIA FIELD POWER SUPPLY HOLE
B	2" [51] DIA POWER SUPPLY KNOCKOUT
C	1 3/4" [44] DIA GAUGE ACCESS PLUG
D	7/8" [22] DIA FIELD CONTROL WIRING HOLE
E	3/4"-14 NPT CONDENSATE DRAIN
G	2 1/2 " [64] DIA POWER SUPPLY KNOCK-OUT

THRU-THE-BASE CHART THESE HOLES REQUIRED FOR USE CRBTMPWR001A01			
	THREADED CONDUIT SIZE	WIRE USE	REQ'D HOLE SIZES (MAX.)
W	1/2"	ACC.	7/8" [22.2]
X	1/2"	24V	7/8" [22.2]
Y *	3/4" (001)	POWER	1 1/8" [28.4]
	FOR "THRU-THE-BASEPAN" FACTORY OPTION, FITTINGS FOR ONLY X & Y ARE PROVIDED		
*	SELECT EITHER 3/4" OR 1/2" FOR POWER, DEPENDING ON WIRE SIZE		

UNIT	J	K
50HCQA04	33 3/8 [847]	18 5/8 [472]
50HCQA05	41 3/8 [1051]	14 7/8 [377]
50HCQA06	41 3/8 [1051]	14 7/8 [377]

C10230

Fig. 1 - Dimensions 50HCQ 04-06

WEIGHTS & DIMENSIONS (cont.)

UNIT	STD. UNIT WEIGHT		CORNER WEIGHT (A)		CORNER WEIGHT (B)		CORNER WEIGHT (C)		CORNER WEIGHT (D)		C.G.		HEIGHT
	LBS.	KG.	LBS.	KG.	LBS.	KG.	LBS.	KG.	LBS.	KG.	X	Y	Z
50HCQA04	495	225	130	59	118	54	118	54	130	59	35 3/8 [899]	23 3/8 [594]	18 3/8 [467]
50HCQA05	580	263	161	73	147	67	130	59	142	64	35 1/2 [902]	21 7/8 [556]	20 1/2 [521]
50HCQA06	610	277	165	75	152	69	141	64	152	69	35 3/4 [908]	22 1/2 [572]	20 3/4 [527]

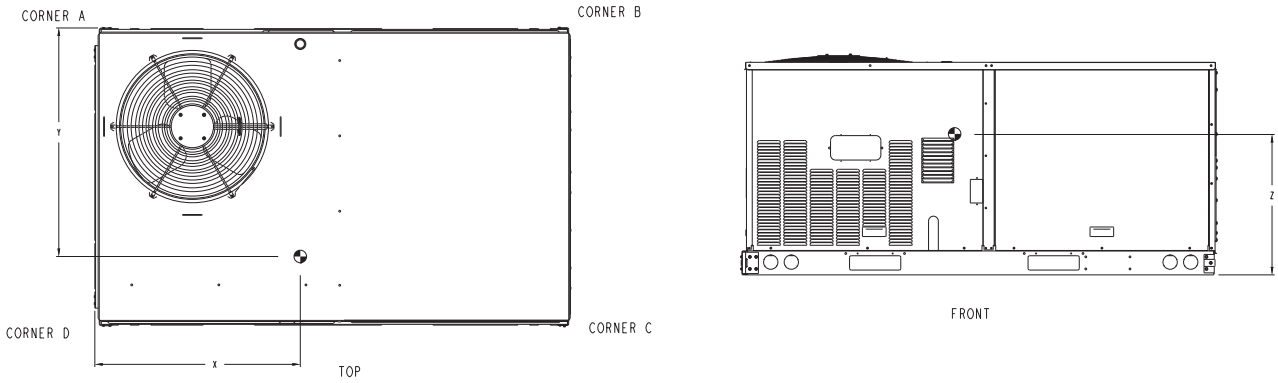

C10231

Fig. 2 - Dimensions 50HCQ 04-06

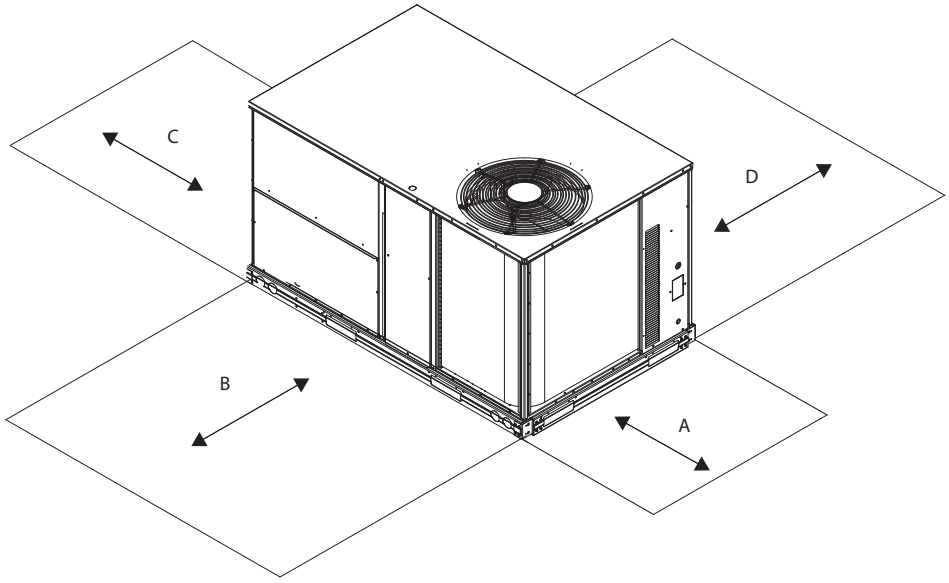

C10577

Fig. 3 - Service Clearance

LOC	DIMENSION	CONDITION
A	48–in. (1219 mm)	Unit disconnect is mounted on panel
	18–in. (457 mm)	No disconnect, convenience outlet option
	18–in. (457 mm)	Recommended service clearance
	12–in. (305 mm)	Minimum clearance
B	42–in. (1067 mm)	Surface behind servicer is grounded (e.g., metal, masonry wall)
	36–in. (914 mm)	Surface behind servicer is electrically non–conductive (e.g., wood, fiberglass)
	Special	Check for sources of flue products within 10–ft of unit fresh air intake hood
C	36–in. (914 mm)	Side condensate drain is used
	18–in. (457 mm)	Minimum clearance
D	42–in. (1067 mm)	Surface behind servicer is grounded (e.g., metal, masonry wall, another unit)
	36–in. (914 mm)	Surface behind servicer is electrically non–conductive (e.g., wood, fiberglass)

WEIGHTS & DIMENSIONS (cont.)

ROOFCURB ACCESSORY	A	UNIT SIZE
CRRFCURB001A01	1' - 2" [356]	50HCQA04-06
CRRFCURB002A01	2' - 0" [610]	

NOTES:
1. ROOFCURB ACCESSORY IS SHIPPED DISASSEMBLED.
2. INSULATED PANELS: 1" THK. POLYURETHANE FOAM, 1-3/4 # DENSITY.
3. DIMENSIONS IN [ ] ARE IN MILLIMETERS.
4. ROOFCURB: 18 GAGE STEEL ON 14" CURB, AND 16 GAGE STEEL ON 24" CURB.
5. ATTACH DUCTWORK TO CURB. (FLANGES OF DUCT REST ON CURB)
6. SERVICE CLEARANCE 4' ON EACH SIDE.
7. ⇨ DIRECTION OF AIR FLOW.
8. CONNECTOR PACKAGES CRBTMPWR001A01 AND 2A01 ARE FOR THRU-THE-CURB TYPE CONNECTIONS. PACKAGES CRBTMPWR003A01 AND 4A01 ARE FOR THE THRU-THE-BOTTOM TYPE CONNECTIONS.

CONNECTOR PKG. ACCY.	B	C	D ALT DRAIN HOLE	GAS	POWER	CONTROL	ACCESSORY POWER
CRBTMPWR001A01	1'-9 11/16" [551]	1'-4" [406]	1 3/4" [44.5]	3/4" [19] NPT	3/4" [19] NPT	1/2" [12.7] NPT	1/2" [12.7] NPT
CRBTMPWR003A01				1/2" [12.7] NPT			

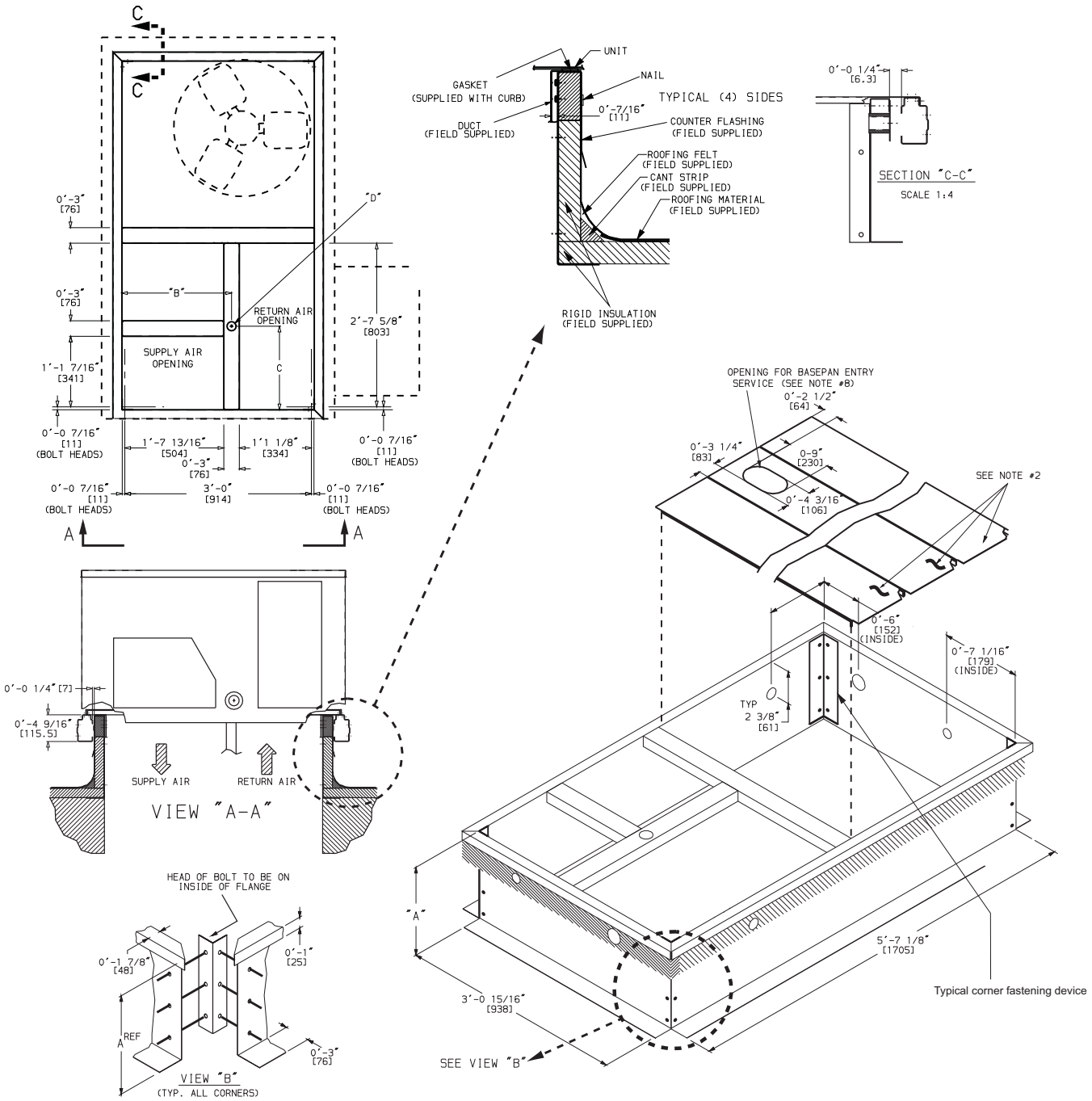

Fig. 4 - Curb Dimensions 50HCQ 04-06

WEIGHTS & DIMENSIONS (cont.)

NOTES:

1. DIMENSIONS ARE IN INCHES, DIMENSIONS IN [ ] ARE IN MILLIMETERS.
2. CENTER OF GRAVITY
3. DIRECTION OF AIR FLOW

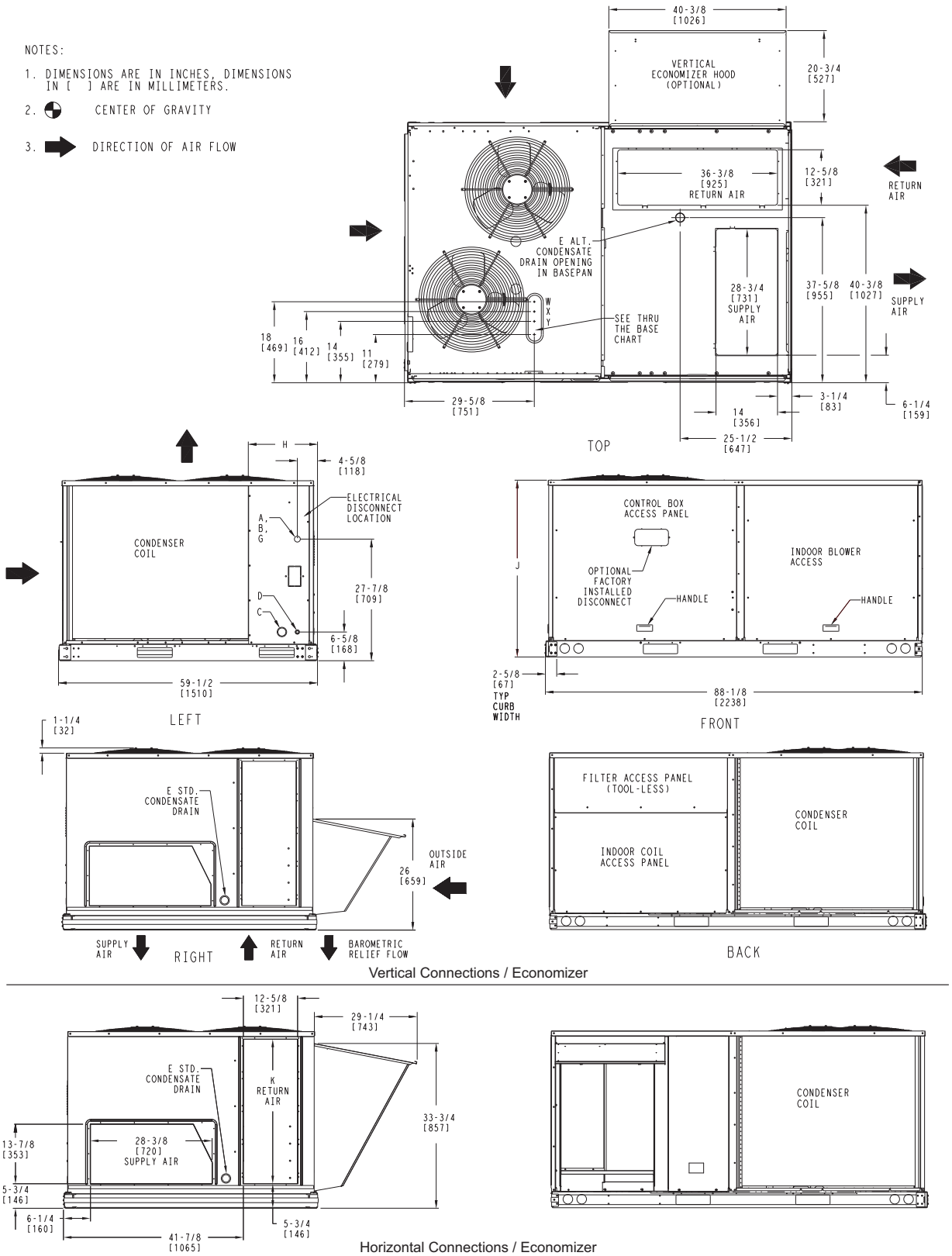

	CONNECTION SIZES
A	1 3/8" [35] DIA FIELD POWER SUPPLY HOLE
B	2 1/2" [64] DIA POWER SUPPLY KNOCKOUT
C	1 3/4" [51] DIA GAUGE ACCESS PLUG
D	7/8" [22] DIA FIELD CONTROL WIRING HOLE
E	3/4"-14 NPT CONDENSATE DRAIN
G	2 " [51] DIA POWER SUPPLY KNOCK-OUT

THRU-THE-BASE CHART (FIELD INST)

THESE HOLES REQUIRED FOR USE WITH ACCY KITS:
CRBTMPWR001A01: 07
CRBTMPWR002A01: 08

	THREADED CONDUIT SIZE	WIRE USE	REQ'D HOLE SIZES (MAX.)
W	1/2"	ACC.	7/8" [22.2]
X	1/2"	24V	7/8" [22.2]
Y	3/4" (001) 1 1/4" (002)	POWER	1 1/8" [28.6] 1 3/4" [44.4]

THRU-THE-BASE CHART (FIOP)

FOR "THRU-THE-BASEPAN" FACTORY OPTION, FITTINGS FOR ONLY X & Y ARE PROVIDED: (1) 1/2" & (1) 1 1/4" ELECTRICAL FITTINGS.

UNIT	J	K	H
50HCQA07	41 1/4 [1048]	33 [658]	15 7/8 [403]
50HCQD08	49 3/8 [1253]	36 3/8 [925]	15 7/8 [403]

C10464

Fig. 5 - Dimensions 50HCQ 07-08

WEIGHTS & DIMENSIONS (cont.)

UNIT	STD. UNIT WEIGHT *		CORNER WEIGHT (A)		CORNER WEIGHT (B)		CORNER WEIGHT (C)		CORNER WEIGHT (D)		C.G.		
	LBS.	KG.	LBS.	KG.	LBS.	KG.	LBS.	KG.	LBS.	KG.	X	Y	Z
50HCQA07	710	322	162	73.5	129	58.5	186	84.4	234	106	38 5/8 [481]	34 1/8 [867]	21 1/4 [540]
50HCQD08	875	397	190	86.2	160	72.6	253	114.8	284	128.8	40 [1016]	34 5/8 [879]	24 3/8 [619]

* STANDARD UNIT WEIGHT IS WITHOUT ELECTRIC HEAT AND WITHOUT PACKAGING.
FOR OPTIONS AND ACCESSORIES REFER TO THE PRODUCT DATA CATALOG.

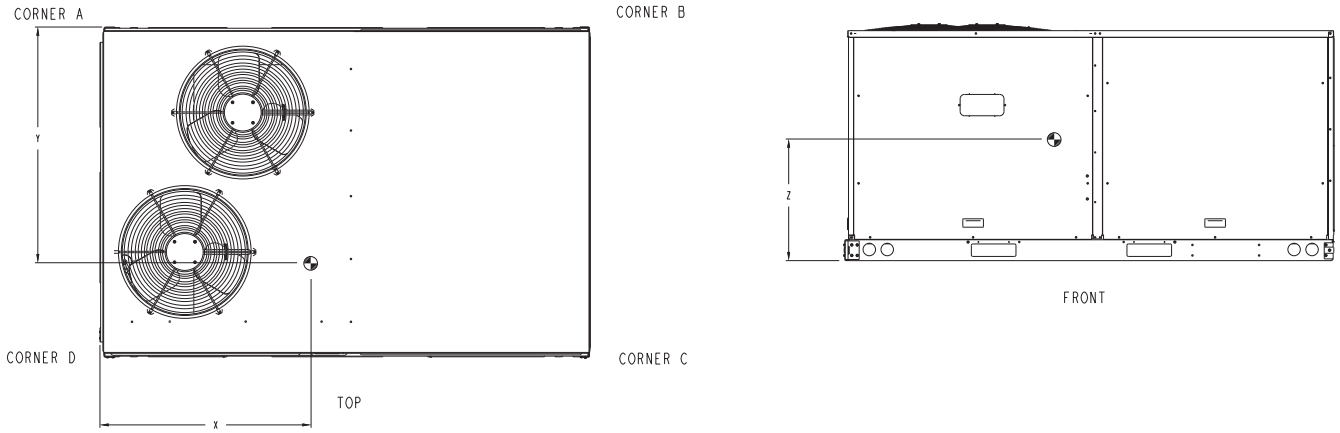

C10465

Fig. 6 - Dimensions 50HCQ 07-08

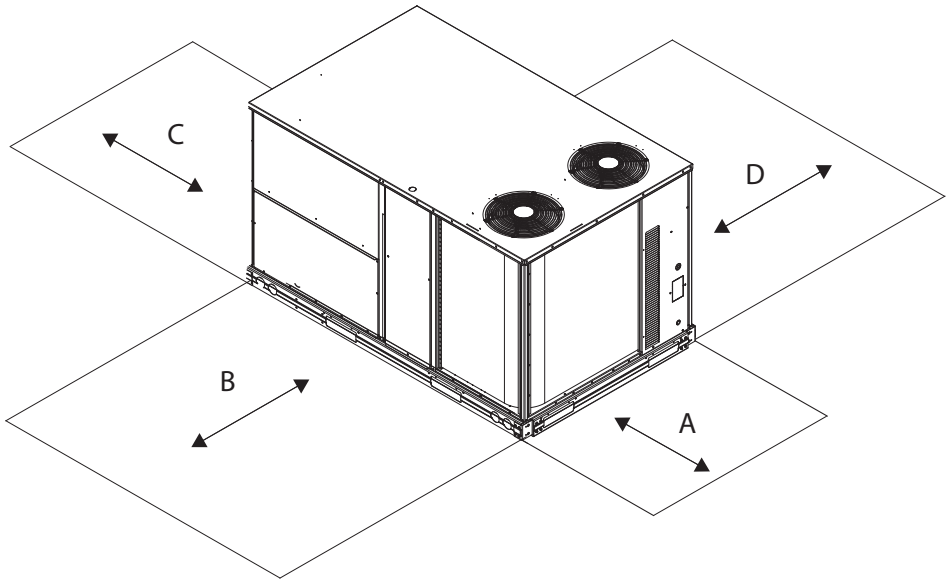

C10577

Fig. 7 - Service Clearance

LOC	DIMENSION	CONDITION
A	48–in. (1219 mm)	Unit disconnect is mounted on panel
	18–in. (457 mm)	No disconnect, convenience outlet option
	18–in. (457 mm)	Recommended service clearance
	12–in. (305 mm)	Minimum clearance
B	42–in. (1067 mm)	Surface behind servicer is grounded (e.g., metal, masonry wall)
	36–in. (914 mm)	Surface behind servicer is electrically non–conductive (e.g., wood, fiberglass)
	Special	Check for sources of flue products within 10–ft of unit fresh air intake hood
C	36–in. (914 mm)	Side condensate drain is used
	18–in. (457 mm)	Minimum clearance
D	42–in. (1067 mm)	Surface behind servicer is grounded (e.g., metal, masonry wall, another unit)
	36–in. (914 mm)	Surface behind servicer is electrically non–conductive (e.g., wood, fiberglass)

NOTES:

1. DIMENSIONS ARE IN INCHES, DIMENSIONS IN [ ] ARE IN MILLIMETERS.
2. CENTER OF GRAVITY
3. DIRECTION OF AIR FLOW

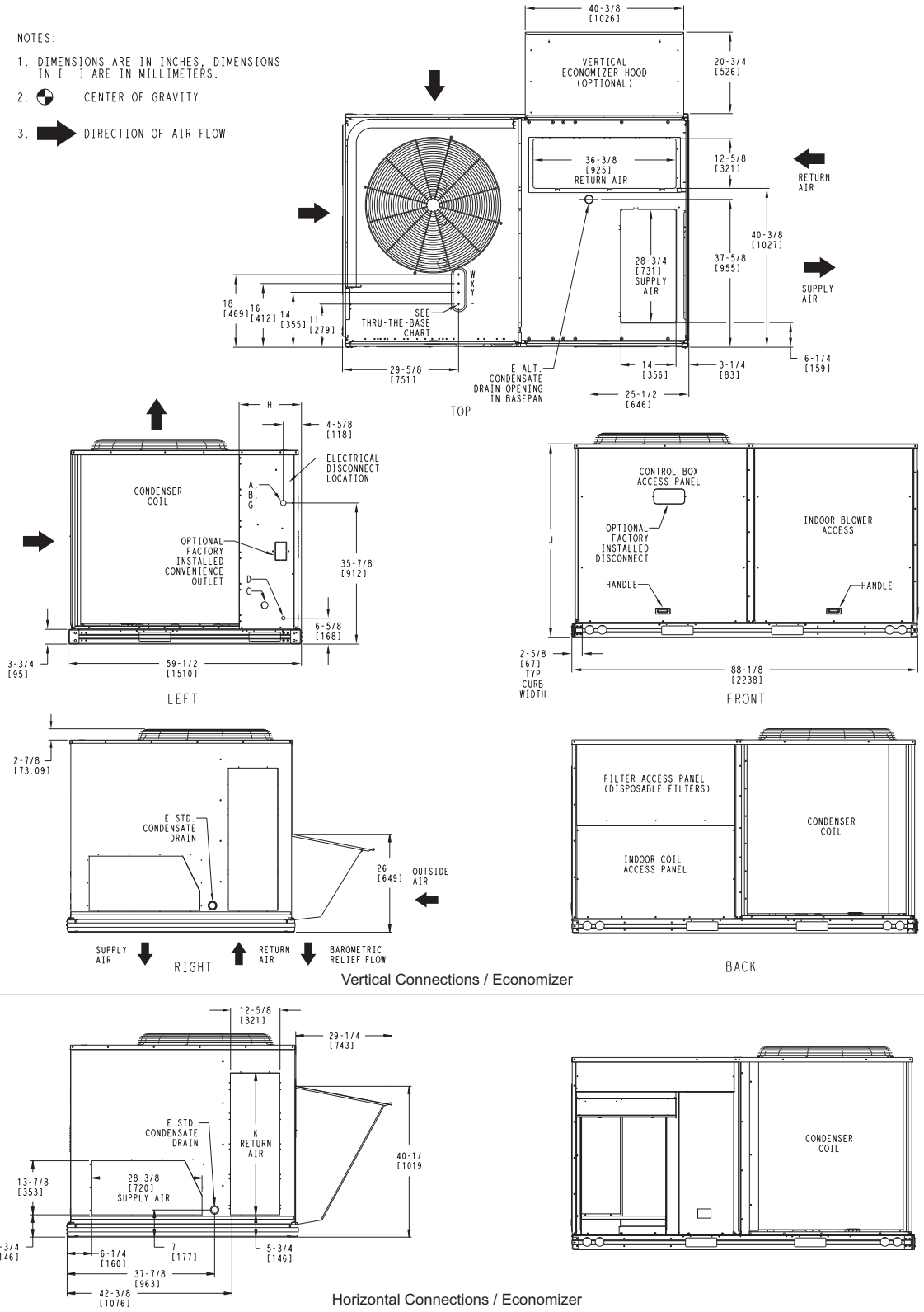

Vertical Connections / Economizer

Horizontal Connections / Economizer

	CONNECTION SIZES
A	1 3/8" [35] DIA FIELD POWER SUPPLY HOLE
B	2 1/2" [64] DIA POWER SUPPLY KNOCKOUT
C	1 3/4" [51] DIA GAUGE ACCESS PLUG
D	7/8" [22] DIA FIELD CONTROL WIRING HOLE
E	3/4"-14 NPT CONDENSATE DRAIN
G	2" [51] DIA POWER SUPPLY KNOCK-OUT

THRU-THE-BASE CHART THESE HOLES REQUIRED FOR USE CRBTMPWR002A01			
	THREADED CONDUIT SIZE	WIRE USE	REQ'D HOLE SIZES (MAX.)
W	1/2"	ACC.	7/8" [22.2]
X	1/2"	24V	7/8" [22.2]
Y	1 1/4"	POWER	1 3/4" [44.4]
	FOR "THRU-THE-BASEPAN" FACTORY OPTION, FITTINGS FOR ONLY X & Y ARE PROVIDED		

UNIT	H	J	K
50HCQD09	15 7/8 [403]	49 3/8 [1253]	36 3/8 [925]

C10460

Fig. 8 - Dimensions 50HCQ 09

WEIGHTS & DIMENSIONS (cont.)

UNIT	STD. UNIT WEIGHT		CORNER WEIGHT (A)		CORNER WEIGHT (B)		CORNER WEIGHT (C)		CORNER WEIGHT (D)		C.G.		
	LBS.	KG.	LBS.	KG.	LBS.	KG.	LBS.	KG.	LBS.	KG.	X	Y	Z
50HCQD09	1020	463	255	115.7	199	90.3	248	112.5	318	144.2	38 1/4 [972]	32 [813]	24 [610]

* STANDARD UNIT WEIGHT IS WITHOUT ELECTRIC HEAT AND WITHOUT PACKAGING.
FOR OPTIONS AND ACCESSORIES REFER TO THE PRODUCT DATA CATALOG.

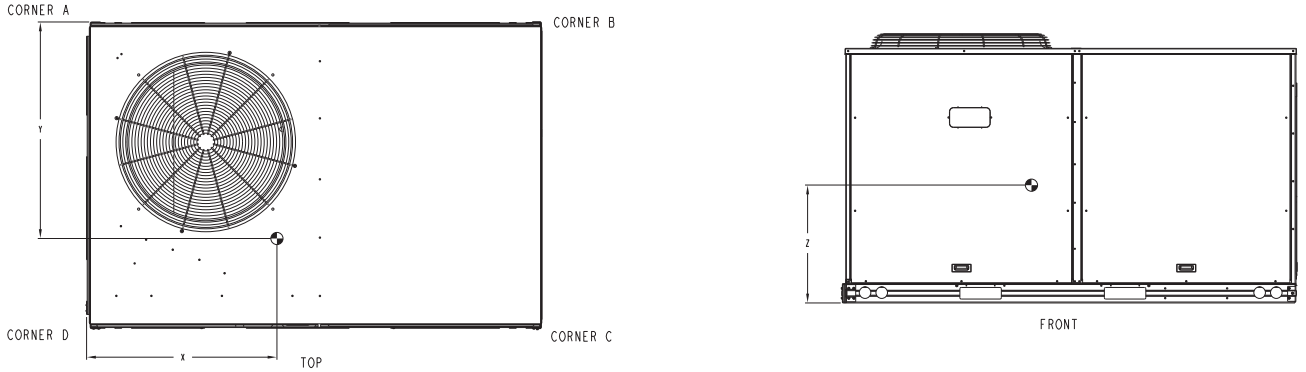

C10461

Fig. 9 - Dimensions 50HCQ 09

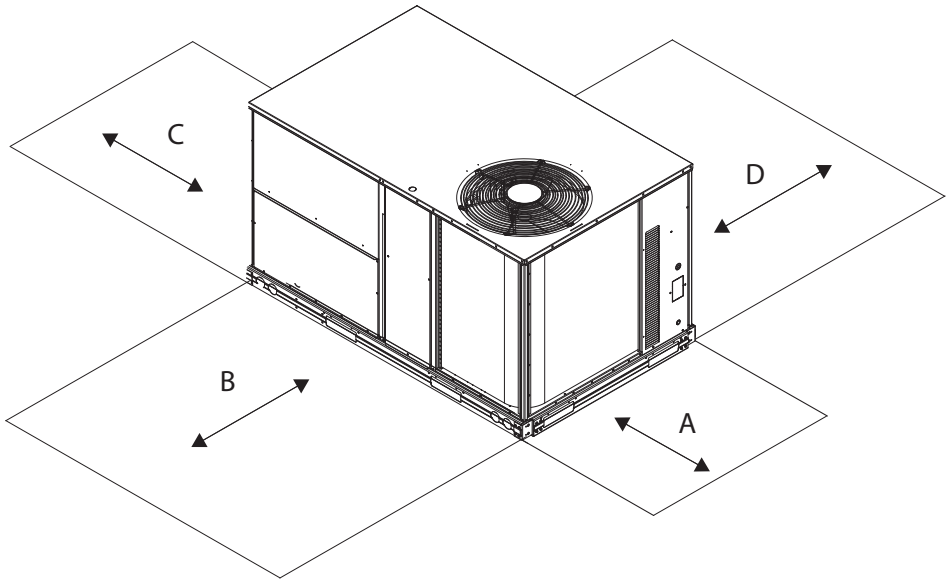

C08337

Fig. 10 - Service Clearance

LOC	DIMENSION	CONDITION
A	48 – in. (1219 mm)	Unit disconnect is mounted on panel
	18 – in. (457 mm)	No disconnect, convenience outlet option
	18 – in. (457 mm)	Recommended service clearance
	12 – in. (305 mm)	Minimum clearance
B	42 – in. (1067 mm)	Surface behind servicer is grounded (e.g., metal, masonry wall)
	36 – in. (914 mm)	Surface behind servicer is electrically non – conductive (e.g., wood, fiberglass)
	Special	Check for sources of flue products within 10 – ft of unit fresh air intake hood
C	36 – in. (914 mm)	Side condensate drain is used
	18 – in. (457 mm)	Minimum clearance
D	42 – in. (1067 mm)	Surface behind servicer is grounded (e.g., metal, masonry wall, another unit)
	36 – in. (914 mm)	Surface behind servicer is electrically non – conductive (e.g., wood, fiberglass)

WEIGHTS & DIMENSIONS (cont.)

ROOF CURB ACCESSORY #	A	UNIT SIZE
CRRFCURB003A01	1′-2" [356]	50HCQ*07-09
CRRFCURB004A01	2′-0" [610]	

NOTES:
1. ROOFCURB ACCESSORY IS SHIPPED DISASSEMBLED.
2. INSULATED PANELS: 1" THK. POLYURETHANE FOAM, 1-3/4 # DENSITY.
3. DIMENSIONS IN [ ] ARE IN MILLIMETERS.
4. ROOFCURB: 16 GAGE STEEL.
5. ATTACH DUCTWORK TO CURB. (FLANGES OF DUCT REST ON CURB).
6. SERVICE CLEARANCE 4" ON EACH SIDE.
7. ▨ DIRECTION OF AIR FLOW.
8. CONNECTOR PACKAGES CRBTMPWR001A01 AND 2A01 ARE FOR THRU-THE-CURB TYPE CONNECTIONS PACKAGES CRBTMPWR003A01 AND 4A01 ARE FOR THRU-THE-BOTTOM TYPE CONNECTIONS.

CONNECTOR PKG. ACC.	B	C	D (ALT. DRAIN HOLE)	POWER	CONTROL	ACCECCORY PWR
CRBTMPWR001A01	2′ 8-7/16" [827]	1′ 10-15/16" [583]	1-3/4" [44.5]	3/4" [19] NPT	1/2" [12.7] NPT	1/2" [12.7] NPT
CRBTMPWR002A01				1-1/4" [31.7] NPT		
CRBTMPWR003A01				3/4" [19] NPT		
CRBTMPWR004A01				1-1/4" [31.7] NPT		

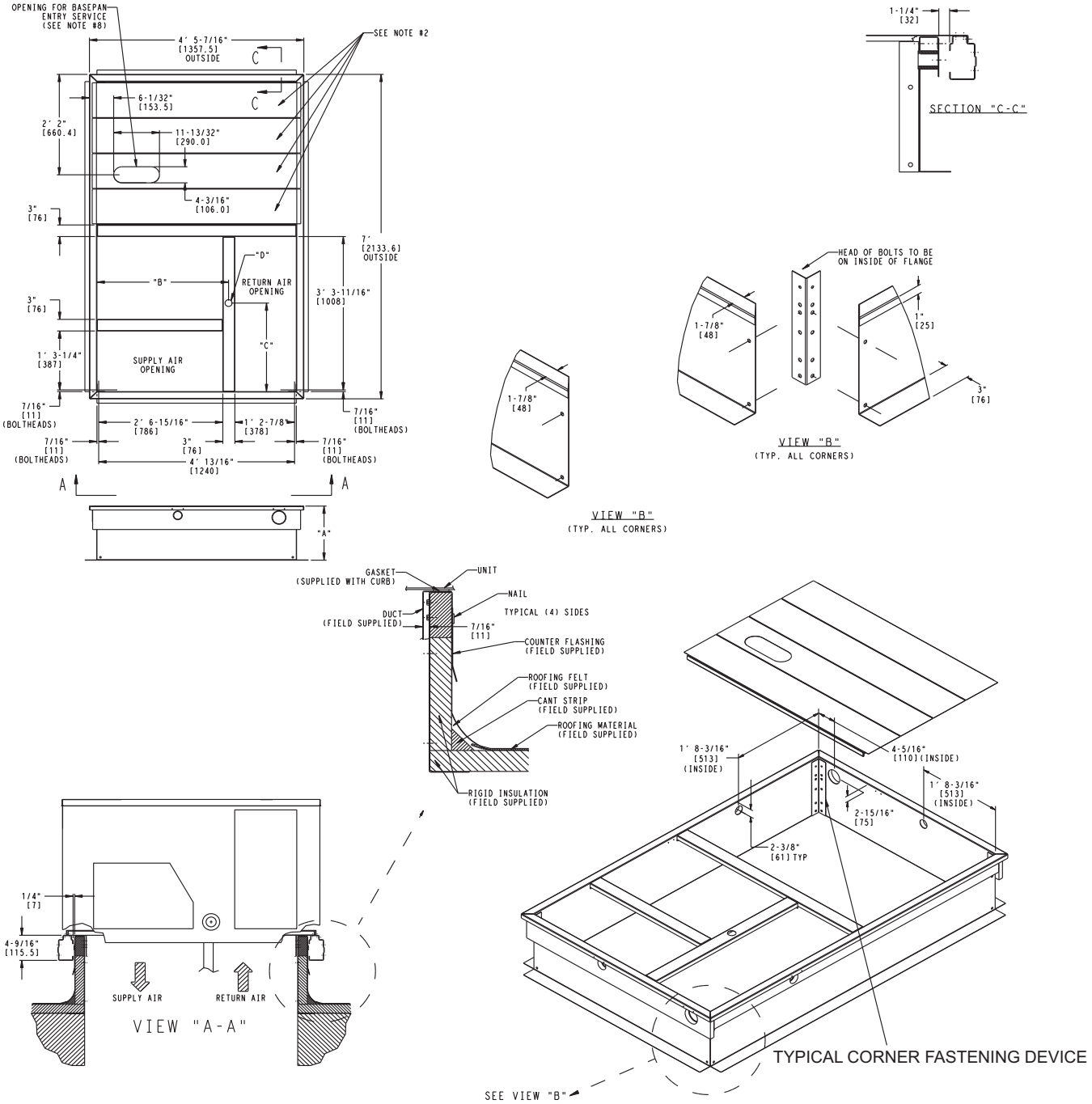

Fig. 11 - Curb Dimensions 50HCQ 07-09

WEIGHTS & DIMENSIONS (cont.)

NOTES:

1. DIMENSIONS ARE IN INCHES, DIMENSIONS IN [ ] ARE IN MILLIMETERS.
2. CENTER OF GRAVITY
3. DIRECTION OF AIR FLOW

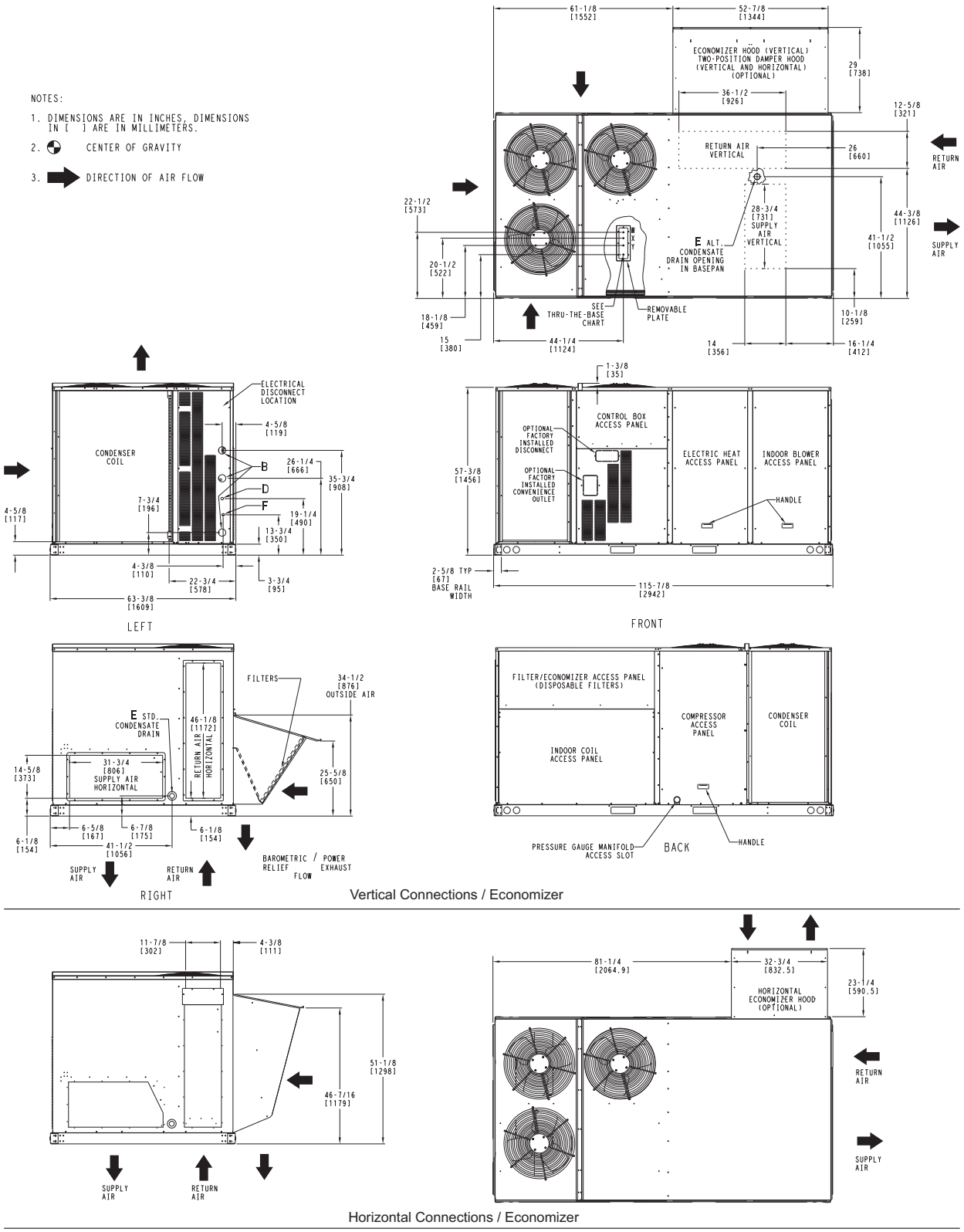

	CONNECTION SIZES
B	2 1/2" [64] DIA POWER SUPPLY HOLE
D	7/8" [22] DIA FIELD CONTROL WIRING HOLE
E	3/4"-14 NPT CONDENSATE DRAIN
F	7/8" [22] DIA FIELD CONVENIENCE OUTLET HOLE

THRU-THE-BASE CHART
THESE HOLES REQUIRED FOR USE CRBTMPWR005A00,006A00,007A00

ACCESSORY NO.		THREADED CONDUIT SIZE	WIRE USE	REQ'D HOLE SIZES (MAX.)
005	W	1/2"	ACC.	7/8" [22.2]
	X	1/2"	24V	7/8" [22.2]
	Y	1 1/4"	POWER	1 1/2" [38.1]
006	W	1/2"	ACC.	7/8" [22.2]
	X	1/2"	24V	7/8" [22.2]
	Y	1 1/2"	POWER	2" [50.8]
007	W	1/2"	ACC.	7/8" [22.2]
	X	1/2"	24V	7/8" [22.2]
	Y	2"	POWER	2 1/2" [63.5]
	FOR "THRU-THE-BASEPAN" FACTORY OPTION, FITTINGS FOR X & Y ARE PROVIDED AS SPECIFIED ON "006".			

C10845

Fig. 12 – Dimensions 50HCQ 12

WEIGHTS & DIMENSIONS (cont.)

UNIT	STD UNIT WEIGHT		CORNER WEIGHT (A)		CORNER WEIGHT (B)		CORNER WEIGHT (C)		CORNER WEIGHT (D)		C.G.		
	LBS.	KG.	LBS.	KG.	LBS.	KG.	LBS.	KG.	LBS.	KG.	X	Y	Z
50HCQD12	1390	632	356	162	344	156	339	154	351	160	57 [1448]	31 1/2 [800]	21 1/8 [537]

STANDARD UNIT WEIGHT IS WITHOUT ELECTRIC HEAT & WITHOUT PACKAGING.
FOR OPTIONS & ACCESSORIES, REFER TO THE PRODUCT DATA CATALOG.

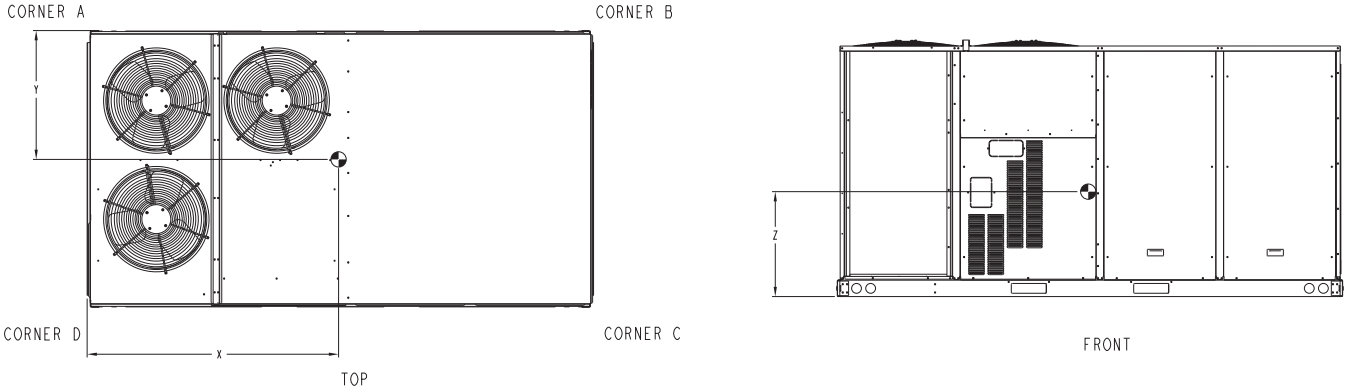

C10846

Fig. 13 - Dimensions 50HCQ 12

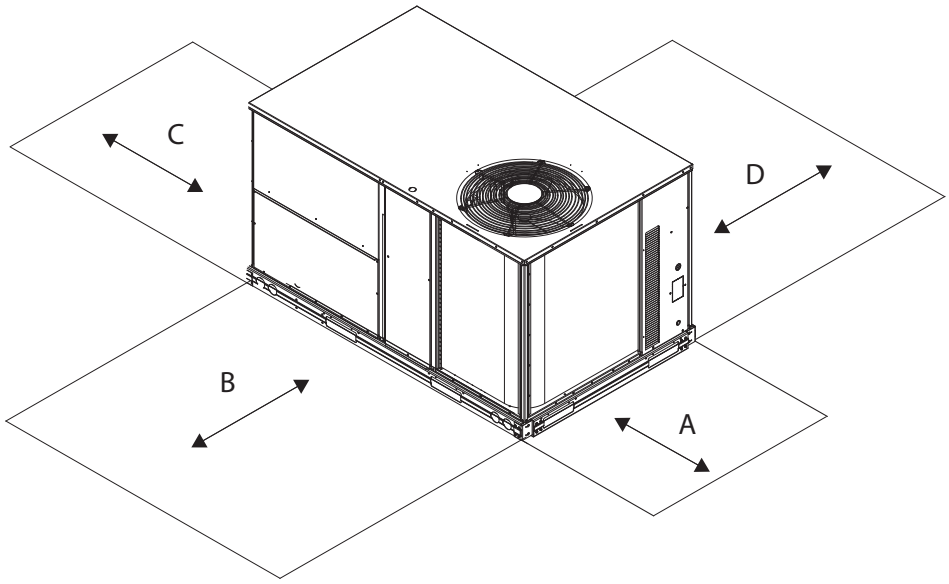

C08337

Fig. 14 - Service Clearance

LOC	DIMENSION	CONDITION
A	48 – in. (1219 mm)	Unit disconnect is mounted on panel
	18 – in. (457 mm)	No disconnect, convenience outlet option
	18 – in. (457 mm)	Recommended service clearance
	12 – in. (305 mm)	Minimum clearance
B	42 – in. (1067 mm)	Surface behind servicer is grounded (e.g., metal, masonry wall)
	36 – in. (914 mm)	Surface behind servicer is electrically non – conductive (e.g., wood, fiberglass)
	Special	Check for sources of flue products within 10 – ft of unit fresh air intake hood
C	36 – in. (914 mm)	Side condensate drain is used
	18 – in. (457 mm)	Minimum clearance
D	42 – in. (1067 mm)	Surface behind servicer is grounded (e.g., metal, masonry wall, another unit)
	36 – in. (914 mm)	Surface behind servicer is electrically non – conductive (e.g., wood, fiberglass)

WEIGHTS & DIMENSIONS (cont.)

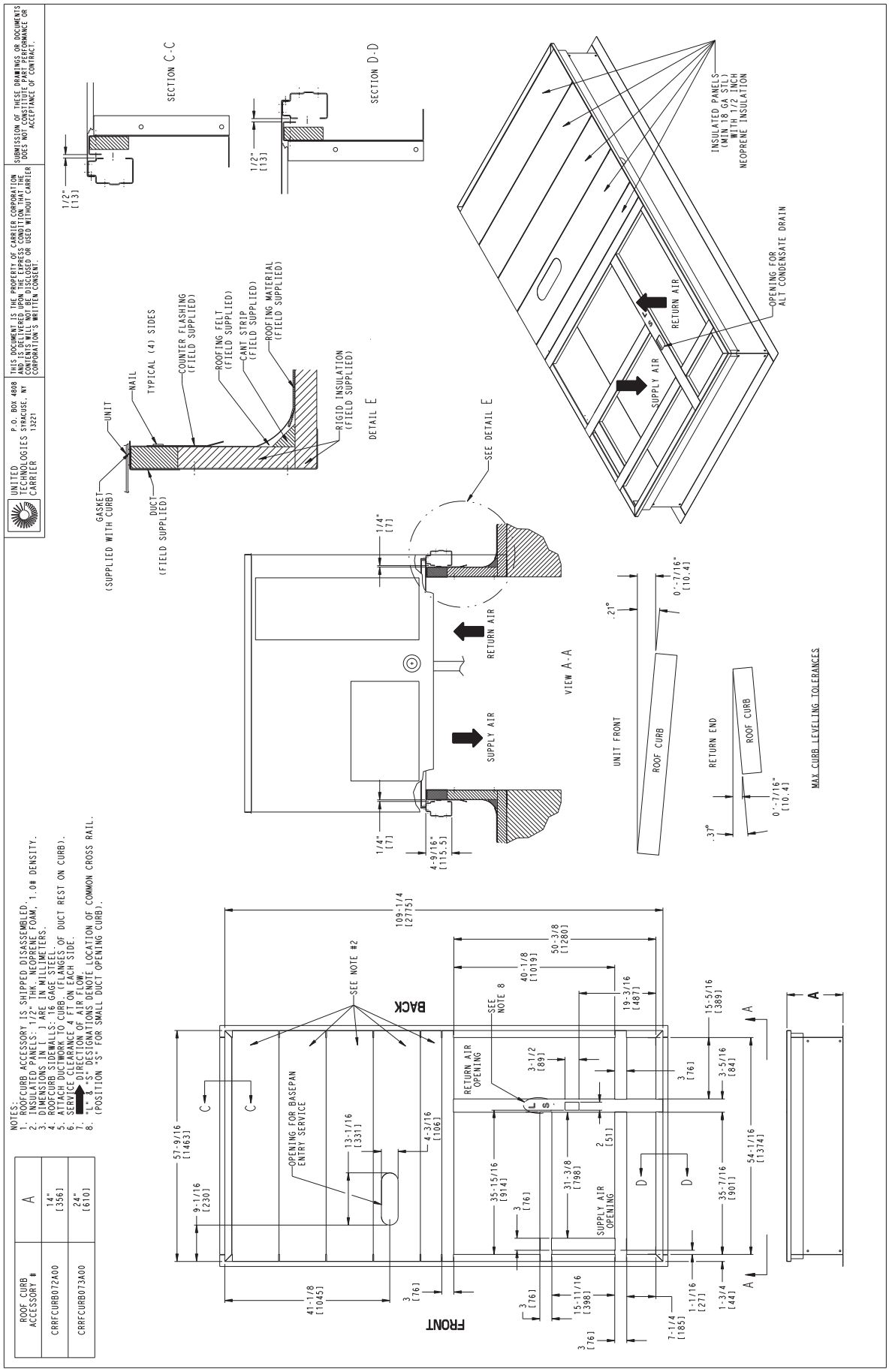

C10855

Fig. 15 - Curb Dimensions 50HCQ 12

OPTION / ACCESSORY WEIGHTS

OPTION / ACCESSORY	OPTION / ACCESSORY WEIGHTS													
	04		05		06		07		08		09		12	
	lb	kg	lb	kg	lb	kg	lb	kg	lb	kg	lb	kg	lb	kg
Power Exhaust – vertical	50	23	50	23	50	23	50	23	75	34	75	34	85	39
Power Exhaust – horizontal	30	14	30	14	30	14	30	14	30	14	30	14	75	34
EconoMi$er (IV or 2)	50	23	50	23	50	23	50	23	75	34	75	34	115	52
Two Position damper	39	18	39	18	39	18	39	18	58	26	58	26	65	29
Manual Dampers	12	5	12	5	12	5	12	5	18	8	18	8	25	11
Hail Guard (louvered)	16	7	16	7	16	7	16	7	34	15	34	15	45	20
Cu/Cu Condenser Coil	35	16	35	16	35	16	95	43	95	43	95	43	160	73
Cu/Cu Cond. & Evaporator Coils	60	27	60	27	90	41	165	75	140	64	195	88	280	127
Roof Curb (14–in. curb)	115	52	115	52	115	52	115	52	143	65	143	65	180	82
Roof Curb (24–in. curb)	197	89	197	89	197	89	197	89	245	111	245	111	255	116
CO_2 sensor	5	2	5	2	5	2	5	2	5	2	5	2	5	2
Electric Heater	30	14	30	14	30	14	30	14	45	20	45	20	25	11
Single Point Kit	10	5	10	5	10	5	10	5	12	5	12	5	25	11
Optional Indoor Motor / Drive	10	5	10	5	10	5	10	5	15	7	15	7	45	20
Motormaster Controller	35	16	35	16	35	16	35	16	35	16	35	16	35	16
Return Smoke Detector	5	2	5	2	5	2	5	2	5	2	5	2	5	2
Supply Smoke Detector	5	2	5	2	5	2	5	2	5	2	5	2	5	2
Non–Fused Disconnect	15	7	15	7	15	7	15	7	15	7	15	7	15	7
Powered Convenience outlet	35	16	35	16	35	16	35	16	35	16	35	16	35	16
Non–Powered Convenience outlet	5	2	5	2	5	2	5	2	5	2	5	2	5	2
Enthalpy Sensor	2	1	2	1	2	1	2	1	2	1	2	1	2	1
Differential Enthalpy Sensor	3	1	3	1	3	1	3	1	3	1	3	1	3	1

NOTE: Where multiple variations are available, the heaviest combination is listed.

Min operating ambient temp (cooling):

In mechanical cooling mode, your Carrier rooftop can safely operate down to an outdoor ambient temperature of 30°F (-1°C). It is possible to provide cooling at lower outdoor ambient temperatures by using less outside air, economizers, and/or accessory low ambient kits.

Max operating ambient temp (cooling):

The maximum operating ambient temperature for cooling mode is 125°F (52°C). While cooling operation above 125°F (52°C) may be possible, it could cause either a reduction in performance, reliability, or a protective action by the unit's internal safety devices.

Min and max airflow (cooling mode):

To maintain safe and reliable operation of your rooftop, operate within the cooling airflow limits. Operating above the max may cause blow-off, undesired airflow noise, or airflow related problems with the rooftop unit. Operating below the min may cause problems with coil freeze-up.

Airflow:

All units are draw-though in cooling mode.

Outdoor air application strategies:

Economizers reduce operating expenses and compressor run time by providing a free source of cooling and a means of ventilation to match application changing needs. In fact, they should be considered for most applications. Also, consider the various economizer control methods and their benefits, as well as sensors required to accomplish your application goals. Please contact your local Carrier representative for assistance.

Motor limits, Brake horsepower (BHP):

Due to Carrier's internal unit design, air path, and specially designed motors, the full horsepower (maximum continuous BHP) band, as listed in this manual, can be used with the utmost confidence. There is no need for extra safety factors, as Carrier's motors are designed and rigorously tested to use the entire, listed BHP range without either nuisance tripping or premature motor failure.

Sizing a rooftop

Bigger isn't necessarily better. While an air conditioner needs to have enough capacity to meet the load, it doesn't need excess capacity. In fact, having excess capacity typically results in very poor part load performance and humidity control.

Using higher design temperatures than ASHRAE recommends for your location, adding "safety factors" to the calculated load, and rounding up to the next largest unit, are all signs of oversizing air conditioners. Oversizing can cause short-cycling, and short cycling leads to poor humidity control, reduced efficiency, higher utility bills, drastic indoor temperature swings, excessive noise, and increased wear and tear on the air conditioner.

Rather than oversizing an air conditioner, wise contractors and engineers "right-size" or even slightly undersize air conditioners. Correctly sizing an air conditioner controls humidity better; promotes efficiency; reduces utility bills; extends equipment life, and maintains even, comfortable temperatures.

Low ambient applications

When equipped with a Carrier economizer, your rooftop unit can cool your space by bringing in fresh, cool outside air. In fact, when so equipped, accessory low ambient kit may not be necessary. In low ambient conditions, unless the outdoor air is excessively humid or contaminated, economizer-based "free cooling" is the preferred less costly and energy conscious method.

In low ambient applications where outside air might not be desired (such as contaminated or excessively humid outdoor environments), your Carrier rooftop can operate at ambient temperatures down to -20°F (-29°C) using the recommended accessory Motormaster low ambient controller.

Application / Selection Option

Selection software by Carrier saves time by calculating performance in the selection process. Contact your Carrier sales representative for assistance.

Table 14 – COOLING CAPACITIES 1-STAGE COOLING 3 TONS

50HCQA04				AMBIENT TEMPERATURE														
				85			95			105			115			125		
				EAT (db)			EAT (db)			EAT (db)			EAT (db)			EAT (db)		
				75	80	85	75	80	85	75	80	85	75	80	85	75	80	85
900 Cfm	EAT (wb)	58	THC	31.8	31.8	36.0	30.5	30.5	34.5	29.0	29.0	32.9	27.5	27.5	31.1	25.7	25.7	29.2
			SHC	27.5	31.8	36.0	26.4	30.5	34.5	25.2	29.0	32.9	23.8	27.5	31.1	22.3	25.7	29.2
		62	THC	33.5	33.5	34.2	31.8	31.8	33.4	30.0	30.0	32.5	28.0	28.0	31.4	25.9	25.9	30.2
			SHC	24.9	29.5	34.2	24.0	28.7	33.4	23.2	27.8	32.5	22.2	26.8	31.4	21.1	25.7	30.2
		67	THC	36.8	36.8	36.8	34.9	34.9	34.9	32.9	32.9	32.9	30.8	30.8	30.8	28.4	28.4	28.4
			SHC	20.6	25.2	29.9	19.8	24.4	29.1	18.9	23.6	28.3	18.0	22.7	27.4	17.0	21.7	26.4
		72	THC	40.4	40.4	40.4	38.4	38.4	38.4	36.2	36.2	36.2	33.8	33.8	33.8	31.3	31.3	31.3
			SHC	16.1	20.9	25.6	15.4	20.1	24.8	14.5	19.2	24.0	13.6	18.3	23.0	12.7	17.4	22.1
		76	THC	–	43.4	43.4	–	41.2	41.2	–	38.9	38.9	–	36.4	36.4	–	33.7	33.7
			SHC	–	17.3	22.2	–	16.5	21.5	–	15.7	20.6	–	14.8	19.6	–	13.9	18.7
1050 Cfm	EAT (wb)	58	THC	33.5	33.5	38.0	32.1	32.1	36.4	30.6	30.6	34.7	28.9	28.9	32.7	27.0	27.0	30.6
			SHC	29.0	33.5	38.0	27.8	32.1	36.4	26.5	30.6	34.7	25.0	28.9	32.7	23.4	27.0	30.6
		62	THC	34.6	34.6	37.4	32.8	32.8	36.5	30.9	30.9	35.5	28.9	28.9	34.1	27.0	27.0	31.9
			SHC	26.7	32.1	37.4	25.9	31.2	36.5	24.9	30.2	35.5	23.8	28.9	34.1	22.2	27.0	31.9
		67	THC	37.9	37.9	37.9	35.9	35.9	35.9	33.8	33.8	33.8	31.5	31.5	31.5	29.0	29.0	29.0
			SHC	21.8	27.2	32.6	21.0	26.4	31.8	20.1	25.5	30.9	19.2	24.6	29.9	18.2	23.6	28.9
		72	THC	41.5	41.5	41.5	39.4	39.4	39.4	37.1	37.1	37.1	34.6	34.6	34.6	31.9	31.9	31.9
			SHC	16.7	22.1	27.6	15.9	21.3	26.7	15.0	20.4	25.9	14.1	19.5	24.9	13.1	18.6	24.0
		76	THC	–	44.6	44.6	–	42.3	42.3	–	39.8	39.8	–	37.2	37.2	–	34.4	34.4
			SHC	–	18.0	23.6	–	17.2	22.8	–	16.3	21.9	–	15.4	21.0	–	14.5	20.0
1200 Cfm	EAT (wb)	58	THC	35.0	35.0	39.7	33.5	33.5	38.0	31.8	31.8	36.1	30.0	30.0	34.0	28.1	28.1	31.8
			SHC	30.3	35.0	39.7	29.0	33.5	38.0	27.6	31.8	36.1	26.0	30.0	34.0	24.3	28.1	31.8
		62	THC	35.5	35.5	40.4	33.7	33.7	39.3	31.9	31.9	37.6	30.1	30.1	35.4	28.1	28.1	33.1
			SHC	28.4	34.4	40.4	27.4	33.3	39.3	26.2	31.9	37.6	24.7	30.1	35.4	23.1	28.1	33.1
		67	THC	38.7	38.7	38.7	36.7	36.7	36.7	34.5	34.5	34.5	32.1	32.1	32.4	29.5	29.5	31.4
			SHC	22.9	29.0	35.1	22.1	28.2	34.3	21.2	27.3	33.4	20.3	26.3	32.4	19.2	25.3	31.4
		72	THC	42.4	42.4	42.4	40.2	40.2	40.2	37.8	37.8	37.8	35.2	35.2	35.2	32.5	32.5	32.5
			SHC	17.1	23.3	29.4	16.3	22.5	28.6	15.5	21.6	27.7	14.5	20.7	26.8	13.6	19.7	25.8
		76	THC	–	45.5	45.5	–	43.1	43.1	–	40.6	40.6	–	37.8	37.8	–	34.9	34.9
			SHC	–	18.6	25.0	–	17.8	24.1	–	17.0	23.2	–	16.0	22.3	–	15.1	21.3
1350 Cfm	EAT (wb)	58	THC	36.2	36.2	41.1	34.6	34.6	39.3	32.9	32.9	37.3	31.0	31.0	35.1	28.9	28.9	32.8
			SHC	31.4	36.2	41.1	30.0	34.6	39.3	28.5	32.9	37.3	26.9	31.0	35.1	25.1	28.9	32.8
		62	THC	36.3	36.3	42.8	34.7	34.7	40.9	32.9	32.9	38.8	31.0	31.0	36.6	29.0	29.0	34.1
			SHC	29.8	36.3	42.8	28.5	34.7	40.9	27.1	32.9	38.8	25.5	31.0	36.6	23.8	29.0	34.1
		67	THC	39.4	39.4	39.4	37.3	37.3	37.3	35.0	35.0	35.8	32.5	32.5	34.8	29.9	29.9	33.7
			SHC	24.0	30.8	37.6	23.2	30.0	36.8	22.3	29.1	35.8	21.3	28.1	34.8	20.3	27.0	33.7
		72	THC	43.1	43.1	43.1	40.8	40.8	40.8	38.3	38.3	38.3	35.7	35.7	35.7	32.9	32.9	32.9
			SHC	17.6	24.4	31.3	16.8	23.6	30.4	15.9	22.7	29.5	14.9	21.8	28.6	14.0	20.8	27.6
		76	THC	–	46.2	46.2	–	43.8	43.8	–	41.1	41.1	–	38.3	38.3	–	35.3	35.3
			SHC	–	19.2	26.2	–	18.4	25.4	–	17.5	24.5	–	16.6	23.5	–	15.6	22.5
1500 Cfm	EAT (wb)	58	THC	37.3	37.3	42.3	35.6	35.6	40.4	33.8	33.8	38.3	31.8	31.8	36.1	29.7	29.7	33.6
			SHC	32.3	37.3	42.3	30.9	35.6	40.4	29.3	33.8	38.3	27.6	31.8	36.1	25.7	29.7	33.6
		62	THC	37.3	37.3	44.0	35.7	35.7	42.0	33.9	33.9	39.9	31.9	31.9	37.5	29.7	29.7	35.0
			SHC	30.7	37.3	44.0	29.3	35.7	42.0	27.8	33.9	39.9	26.2	31.9	37.5	24.4	29.7	35.0
		67	THC	39.9	39.9	40.0	37.8	37.8	39.1	35.4	35.4	38.1	32.9	32.9	37.1	30.3	30.3	35.9
			SHC	25.1	32.5	40.0	24.2	31.7	39.1	23.3	30.7	38.1	22.3	29.7	37.1	21.2	28.5	35.9
		72	THC	43.7	43.7	43.7	41.3	41.3	41.3	38.8	38.8	38.8	36.1	36.1	36.1	33.2	33.2	33.2
			SHC	18.0	25.5	33.0	17.2	24.7	32.1	16.3	23.8	31.2	15.3	22.8	30.3	14.3	21.8	29.3
		76	THC	–	46.8	46.8	–	44.3	44.3	–	41.6	41.6	–	38.7	38.7	–	35.6	35.6
			SHC	–	19.8	27.4	–	19.0	26.6	–	18.1	25.7	–	17.1	24.7	–	16.1	23.7

LEGEND

– – Do not operate in this region
Cfm – Cubic feet per minute (supply air)
EAT(db) – Entering air temperature (dry bulb)
EAT(wb) – Entering air temperature (wet bulb)
SHC – Sensible heat capacity
THC – Total capacity

Table 15 – COOLING CAPACITIES 1-STAGE COOLING 4 TONS

50HCQA05				AMBIENT TEMPERATURE														
				85			95			105			115			125		
				EAT (db)			EAT (db)			EAT (db)			EAT (db)			EAT (db)		
				75	80	85	75	80	85	75	80	85	75	80	85	75	80	85
1200 Cfm	EAT (wb)	58	THC	41.1	41.1	46.6	39.5	39.5	44.8	37.7	37.7	42.7	35.8	35.8	40.6	33.7	33.7	38.2
			SHC	35.6	41.1	46.6	34.2	39.5	44.8	32.7	37.7	42.7	31.0	35.8	40.6	29.2	33.7	38.2
		62	THC	43.1	43.1	44.7	41.0	41.0	43.6	38.7	38.7	42.5	36.3	36.3	41.2	33.8	33.8	39.8
			SHC	32.3	38.5	44.7	31.3	37.5	43.6	30.2	36.3	42.5	29.0	35.1	41.2	27.8	33.8	39.8
		67	THC	47.4	47.4	47.4	45.1	45.1	45.1	42.6	42.6	42.6	39.9	39.9	39.9	37.1	37.1	37.1
			SHC	26.7	32.9	39.1	25.7	31.9	38.0	24.6	30.8	37.0	23.5	29.7	35.9	22.4	28.5	34.7
		72	THC	52.1	52.1	52.1	49.6	49.6	49.6	46.8	46.8	46.8	43.9	43.9	43.9	40.8	40.8	40.8
			SHC	20.8	27.1	33.4	19.9	26.1	32.3	18.8	25.1	31.3	17.7	24.0	30.2	16.6	22.8	29.0
		76	THC	–	56.1	56.1	–	53.3	53.3	–	50.4	50.4	–	47.3	47.3	–	44.0	44.0
			SHC	–	22.4	29.0	–	21.4	28.0	–	20.4	26.9	–	19.3	25.7	–	18.2	24.6
1400 Cfm	EAT (wb)	58	THC	43.3	43.3	49.1	41.6	41.6	47.1	39.6	39.6	44.9	37.6	37.6	42.6	35.4	35.4	40.1
			SHC	37.5	43.3	49.1	36.0	41.6	47.1	34.4	39.6	44.9	32.6	37.6	42.6	30.6	35.4	40.1
		62	THC	44.5	44.5	48.9	42.3	42.3	47.7	39.9	39.9	46.3	37.7	37.7	44.4	35.4	35.4	41.7
			SHC	34.7	41.8	48.9	33.6	40.7	47.7	32.4	39.4	46.3	30.9	37.7	44.4	29.1	35.4	41.7
		67	THC	48.8	48.8	48.8	46.3	46.3	46.3	43.7	43.7	43.7	40.9	40.9	40.9	37.9	37.9	38.1
			SHC	28.3	35.4	42.5	27.2	34.4	41.5	26.2	33.3	40.4	25.0	32.2	39.3	23.8	31.0	38.1
		72	THC	53.6	53.6	53.6	50.9	50.9	50.9	48.0	48.0	48.0	45.0	45.0	45.0	41.7	41.7	41.7
			SHC	21.6	28.7	35.9	20.5	27.7	34.9	19.5	26.6	33.8	18.4	25.5	32.7	17.2	24.3	31.5
		76	THC	–	57.6	57.6	–	54.7	54.7	–	51.6	51.6	–	48.4	48.4	–	44.9	44.9
			SHC	–	23.3	30.9	–	22.3	29.8	–	21.3	28.7	–	20.1	27.5	–	19.0	26.3
1600 Cfm	EAT (wb)	58	THC	45.2	45.2	51.3	43.3	43.3	49.1	41.3	41.3	46.8	39.1	39.1	44.3	36.7	36.7	41.6
			SHC	39.2	45.2	51.3	37.5	43.3	49.1	35.8	41.3	46.8	33.9	39.1	44.3	31.8	36.7	41.6
		62	THC	46.1	46.1	50.5	43.4	43.4	51.1	41.3	41.3	48.7	39.1	39.1	46.1	36.7	36.7	43.3
			SHC	36.0	43.3	50.5	35.7	43.4	51.1	33.9	41.3	48.7	32.1	39.1	46.1	30.2	36.7	43.3
		67	THC	49.9	49.9	49.9	47.3	47.3	47.3	44.6	44.6	44.6	41.6	41.6	42.6	38.6	38.6	41.3
			SHC	29.8	37.8	45.9	28.7	36.8	44.8	27.6	35.7	43.7	26.5	34.5	42.6	25.2	33.3	41.3
		72	THC	54.7	54.7	54.7	51.9	51.9	51.9	48.9	48.9	48.9	45.7	45.7	45.7	42.4	42.4	42.4
			SHC	22.2	30.3	38.4	21.2	29.2	37.3	20.1	28.2	36.2	18.9	27.0	35.1	17.7	25.8	33.9
		76	THC	–	58.8	58.8	–	55.8	55.8	–	52.6	52.6	–	49.2	49.2	–	45.6	45.6
			SHC	–	24.2	32.6	–	23.1	31.5	–	22.1	30.3	–	20.9	29.1	–	19.7	27.9
1800 Cfm	EAT (wb)	58	THC	46.8	46.8	53.1	44.8	44.8	50.8	42.7	42.7	48.3	40.3	40.3	45.7	37.8	37.8	42.9
			SHC	40.6	46.8	53.1	38.8	44.8	50.8	37.0	42.7	48.3	34.9	40.3	45.7	32.8	37.8	42.9
		62	THC	46.9	46.9	55.2	44.8	44.8	52.8	42.7	42.7	50.3	40.4	40.4	47.6	37.9	37.9	44.6
			SHC	38.5	46.9	55.2	36.8	44.8	52.8	35.1	42.7	50.3	33.2	40.4	47.6	31.1	37.9	44.6
		67	THC	50.8	50.8	50.8	48.1	48.1	48.1	45.2	45.2	46.9	42.2	42.2	45.7	39.1	39.1	44.3
			SHC	31.2	40.2	49.1	30.1	39.1	48.0	29.0	37.9	46.9	27.8	36.7	45.7	26.6	35.4	44.3
		72	THC	55.7	55.7	55.7	52.7	52.7	52.7	49.6	49.6	49.6	46.4	46.4	46.4	42.9	42.9	42.9
			SHC	22.8	31.8	40.8	21.7	30.7	39.7	20.6	29.6	38.6	19.5	28.4	37.4	18.3	27.2	36.2
		76	THC	–	59.7	59.7	–	56.6	56.6	–	53.3	53.3	–	49.8	49.8	–	46.1	46.1
			SHC	–	25.0	34.2	–	23.9	33.1	–	22.8	31.9	–	21.6	30.7	–	20.4	29.5
2000 Cfm	EAT (wb)	58	THC	48.2	48.2	54.6	46.1	46.1	52.2	43.8	43.8	49.7	41.4	41.4	46.9	38.8	38.8	44.0
			SHC	41.8	48.2	54.6	39.9	46.1	52.2	38.0	43.8	49.7	35.9	41.4	46.9	33.6	38.8	44.0
		62	THC	48.2	48.2	56.8	46.1	46.1	54.4	43.9	43.9	51.7	41.4	41.4	48.8	38.8	38.8	45.7
			SHC	39.6	48.2	56.8	37.9	46.1	54.4	36.0	43.9	51.7	34.0	41.4	48.8	31.9	38.8	45.7
		67	THC	51.4	51.4	52.2	48.7	48.7	51.1	45.8	45.8	49.9	42.7	42.7	48.6	39.5	39.5	47.1
			SHC	32.6	42.4	52.2	31.5	41.3	51.1	30.3	40.1	49.9	29.1	38.8	48.6	27.8	37.4	47.1
		72	THC	56.4	56.4	56.4	53.4	53.4	53.4	50.2	50.2	50.2	46.9	46.9	46.9	43.3	43.3	43.3
			SHC	23.3	33.2	43.0	22.2	32.1	41.9	21.1	31.0	40.8	20.0	29.8	39.6	18.8	28.6	38.4
		76	THC	–	60.4	60.4	–	57.2	57.2	–	53.9	53.9	–	50.3	50.3	–	46.5	46.5
			SHC	–	25.7	35.7	–	24.6	34.6	–	23.5	33.5	–	22.3	32.2	–	21.1	31.0

LEGEND

– – Do not operate in this region
Cfm – Cubic feet per minute (supply air)
EAT(db) – Entering air temperature (dry bulb)
EAT(wb) – Entering air temperature (wet bulb)
SHC – Sensible heat capacity
THC – Total capacity

Table 16 – COOLING CAPACITIES 1-STAGE COOLING 5 TONS

50HCQA06				AMBIENT TEMPERATURE														
				85			95			105			115			125		
				EAT (db)			EAT (db)			EAT (db)			EAT (db)			EAT (db)		
				75	80	85	75	80	85	75	80	85	75	80	85	75	80	85
1500 Cfm	EAT (wb)	58	THC	53.8	53.8	60.7	51.7	51.7	58.3	49.4	49.4	55.8	46.9	46.9	53.0	44.2	44.2	49.9
			SHC	46.9	53.8	60.7	45.0	51.7	58.3	43.0	49.4	55.8	40.9	46.9	53.0	38.5	44.2	49.9
		62	THC	56.2	56.2	58.3	53.5	53.5	57.0	50.6	50.6	55.5	47.5	47.5	53.9	44.2	44.2	51.8
			SHC	42.6	50.5	58.3	41.3	49.1	57.0	39.9	47.7	55.5	38.4	46.2	53.9	36.6	44.2	51.8
		67	THC	61.7	61.7	61.7	58.7	58.7	58.7	55.5	55.5	55.5	52.0	52.0	52.0	48.2	48.2	48.2
			SHC	35.1	43.0	50.9	33.8	41.7	49.6	32.5	40.4	48.3	31.1	38.9	46.8	29.5	37.4	45.3
		72	THC	67.7	67.7	67.7	64.4	64.4	64.4	60.9	60.9	60.9	57.1	57.1	57.1	53.0	53.0	53.0
			SHC	27.4	35.3	43.3	26.1	34.1	42.0	24.8	32.7	40.7	23.4	31.3	39.2	21.9	29.8	37.7
		76	THC	–	72.7	72.7	–	69.2	69.2	–	65.4	65.4	–	61.3	61.3	–	56.9	56.9
			SHC	–	29.0	37.3	–	27.8	36.1	–	26.5	34.7	–	25.1	33.2	–	23.5	31.6
1750 Cfm	EAT (wb)	58	THC	56.7	56.7	64.0	54.4	54.4	61.4	51.9	51.9	58.6	49.2	49.2	55.6	46.2	46.2	52.2
			SHC	49.4	56.7	64.0	47.4	54.4	61.4	45.2	51.9	58.6	42.9	49.2	55.6	40.3	46.2	52.2
		62	THC	58.0	58.0	63.8	55.2	55.2	62.3	52.2	52.2	60.5	49.3	49.3	57.8	46.3	46.3	54.2
			SHC	45.9	54.8	63.8	44.5	53.4	62.3	42.9	51.7	60.5	40.8	49.3	57.8	38.3	46.3	54.2
		67	THC	63.4	63.4	63.4	60.3	60.3	60.3	56.9	56.9	56.9	53.2	53.2	53.2	49.3	49.3	49.7
			SHC	37.3	46.4	55.5	36.0	45.1	54.2	34.6	43.7	52.8	33.1	42.2	51.3	31.5	40.6	49.7
		72	THC	69.5	69.5	69.5	66.0	66.0	66.0	62.4	62.4	62.4	58.3	58.3	58.3	54.0	54.0	54.0
			SHC	28.3	37.5	46.7	27.0	36.2	45.4	25.7	34.8	44.0	24.2	33.4	42.5	22.7	31.8	41.0
		76	THC	–	74.5	74.5	–	70.9	70.9	–	66.9	66.9	–	62.6	62.6	–	58.0	58.0
			SHC	–	30.2	39.7	–	29.0	38.4	–	27.6	37.0	–	26.2	35.5	–	24.6	33.9
2000 Cfm	EAT (wb)	58	THC	59.1	59.1	66.7	56.7	56.7	64.0	54.0	54.0	61.0	51.1	51.1	57.7	48.0	48.0	54.1
			SHC	51.5	59.1	66.7	49.4	56.7	64.0	47.1	54.0	61.0	44.5	51.1	57.7	41.8	48.0	54.1
		62	THC	59.5	59.5	68.7	56.7	56.7	66.5	54.1	54.1	63.4	51.2	51.2	60.0	48.0	48.0	56.2
			SHC	48.7	58.7	68.7	47.0	56.7	66.5	44.8	54.1	63.4	42.4	51.2	60.0	39.7	48.0	56.2
		67	THC	64.7	64.7	64.7	61.5	61.5	61.5	57.9	57.9	57.9	54.1	54.1	55.6	50.1	50.1	53.9
			SHC	39.3	49.6	59.9	38.0	48.3	58.6	36.6	46.9	57.2	35.0	45.3	55.6	33.4	43.7	53.9
		72	THC	70.9	70.9	70.9	67.3	67.3	67.3	63.4	63.4	63.4	59.3	59.3	59.3	54.8	54.8	54.8
			SHC	29.2	39.5	49.9	27.9	38.2	48.6	26.5	36.8	47.2	25.0	35.3	45.7	23.4	33.8	44.1
		76	THC	–	75.9	75.9	–	72.1	72.1	–	68.0	68.0	–	63.6	63.6	–	58.8	58.8
			SHC	–	31.3	41.9	–	30.0	40.6	–	28.7	39.2	–	27.2	37.6	–	25.6	36.0
2250 Cfm	EAT (wb)	58	THC	61.2	61.2	69.1	58.6	58.6	66.1	55.8	55.8	63.0	52.7	52.7	59.5	49.4	49.4	55.7
			SHC	53.3	61.2	69.1	51.0	58.6	66.1	48.6	55.8	63.0	45.9	52.7	59.5	43.0	49.4	55.7
		62	THC	61.2	61.2	71.8	58.6	58.6	68.7	55.8	55.8	65.4	52.8	52.8	61.9	49.4	49.4	57.9
			SHC	50.7	61.2	71.8	48.6	58.6	68.7	46.2	55.8	65.4	43.7	52.8	61.9	40.9	49.4	57.9
		67	THC	65.8	65.8	65.8	62.4	62.4	62.8	58.8	58.8	61.3	54.9	54.9	59.7	50.7	50.7	57.9
			SHC	41.2	52.7	64.2	39.9	51.3	62.8	38.4	49.9	61.3	36.9	48.3	59.7	35.2	46.5	57.9
		72	THC	72.0	72.0	72.0	68.3	68.3	68.3	64.3	64.3	64.3	60.0	60.0	60.0	55.4	55.4	55.4
			SHC	30.0	41.5	53.0	28.6	40.1	51.6	27.2	38.7	50.2	25.8	37.2	48.7	24.2	35.6	47.1
		76	THC	–	77.0	77.0	–	73.1	73.1	–	68.9	68.9	–	64.3	64.3	–	59.5	59.5
			SHC	–	32.3	44.1	–	31.0	42.7	–	29.6	41.3	–	28.1	39.7	–	26.6	38.1
2500 Cfm	EAT (wb)	58	THC	62.9	62.9	71.1	60.2	60.2	68.0	57.3	57.3	64.7	54.1	54.1	61.1	50.6	50.6	57.1
			SHC	54.8	62.9	71.1	52.5	60.2	68.0	49.9	57.3	64.7	47.1	54.1	61.1	44.1	50.6	57.1
		62	THC	63.0	63.0	73.8	60.3	60.3	70.6	57.3	57.3	67.2	54.1	54.1	63.4	50.6	50.6	59.3
			SHC	52.2	63.0	73.8	49.9	60.3	70.6	47.5	57.3	67.2	44.8	54.1	63.4	41.9	50.6	59.3
		67	THC	66.6	66.6	68.2	63.2	63.2	66.8	59.5	59.5	65.2	55.5	55.5	63.5	51.3	51.3	61.5
			SHC	43.1	55.6	68.2	41.7	54.2	66.8	40.2	52.7	65.2	38.6	51.0	63.5	36.8	49.1	61.5
		72	THC	72.8	72.8	72.8	69.0	69.0	69.0	65.0	65.0	65.0	60.6	60.6	60.6	55.9	55.9	55.9
			SHC	30.7	43.3	56.0	29.4	42.0	54.6	28.0	40.6	53.2	26.5	39.1	51.7	24.9	37.5	50.1
		76	THC	–	77.9	77.9	–	73.9	73.9	–	69.5	69.5	–	64.9	64.9	–	59.9	59.9
			SHC	–	33.3	46.1	–	32.0	44.7	–	30.6	43.3	–	29.1	41.7	–	27.5	40.1

LEGEND

– – Do not operate in this region
Cfm – Cubic feet per minute (supply air)
EAT(db) – Entering air temperature (dry bulb)
EAT(wb) – Entering air temperature (wet bulb)
SHC – Sensible heat capacity
THC – Total capacity

Table 17 – COOLING CAPACITIES 1-STAGE COOLING 6 TONS

50HCQA07				AMBIENT TEMPERATURE														
				85			95			105			115			125		
				EAT (db)			EAT (db)			EAT (db)			EAT (db)			EAT (db)		
				75	80	85	75	80	85	75	80	85	75	80	85	75	80	85
1800 Cfm	EAT (wb)	58	THC	63.5	63.5	71.7	60.1	60.1	67.9	56.4	56.4	63.7	52.3	52.3	59.1	47.8	47.8	54
			SHC	55.2	63.5	71.7	52.3	60.1	67.9	49.1	56.4	63.7	45.5	52.3	59.1	41.6	47.8	54
		62	THC	66.5	66.5	68.9	62.1	62.1	66.9	57.4	57.4	64.6	52.4	52.4	61.4	47.9	47.9	56.2
			SHC	50.2	59.5	68.9	48.1	57.5	66.9	45.9	55.2	64.6	43.3	52.4	61.4	39.6	47.9	56.2
		67	THC	73.9	73.9	73.9	69.9	69.9	69.9	64.6	64.6	64.6	59	59	59	52.8	52.8	52.8
			SHC	40.7	50	59.4	39.2	48.7	58.1	37.2	46.6	56	35	44.5	53.9	32.7	42.1	51.6
		72	THC	78.2	78.2	78.2	76.9	76.9	76.9	73.1	73.1	73.1	67.5	67.5	67.5	61	61	61
			SHC	29.8	38.9	47.9	29.4	38.7	48	28	37.4	46.8	26.1	35.5	44.9	23.9	33.3	42.7
		76	THC	–	79.5	79.5	–	79.9	79.9	–	78.1	78.1	–	74	74	–	68.1	68.1
			SHC	–	29.8	39.7	–	29.9	39.8	–	29.3	39.1	–	27.9	37.5	–	26.1	35.5
2100 Cfm	EAT (wb)	58	THC	67.7	67.7	76.4	64	64	72.3	60.1	60.1	67.9	55.8	55.8	63	51	51	57.7
			SHC	58.9	67.7	76.4	55.7	64	72.3	52.3	60.1	67.9	48.5	55.8	63	44.4	51	57.7
		62	THC	69.2	69.2	75.6	64.7	64.7	73.5	60.2	60.2	70.5	55.8	55.8	65.5	51.1	51.1	60
			SHC	54.2	64.9	75.6	52.2	62.8	73.5	49.7	60.1	70.5	46.2	55.8	65.5	42.2	51.1	60
		67	THC	75.6	75.6	75.6	72.1	72.1	72.1	66.9	66.9	66.9	60.9	60.9	60.9	54.5	54.5	56.9
			SHC	42.8	53.4	63.9	41.8	52.6	63.3	39.9	50.7	61.6	37.6	48.5	59.3	35.3	46.1	56.9
		72	THC	78.9	78.9	78.9	78.2	78.2	78.2	75	75	75	69.6	69.6	69.6	63	63	63
			SHC	30.2	40.2	50.2	30.1	40.6	51	29.1	39.8	50.5	27.3	38.1	48.9	25.1	35.9	46.7
		76	THC	–	79.7	79.7	–	80.5	80.5	–	79.1	79.1	–	75.5	75.5	–	69.8	69.8
			SHC	–	30.7	42.3	–	30.8	42.1	–	30.3	41.4	–	29.1	40.1	–	27.4	38.3
2400 Cfm	EAT (wb)	58	THC	70.8	70.8	80	67.3	67.3	76.1	63.1	63.1	71.3	58.6	58.6	66.2	53.7	53.7	60.7
			SHC	61.6	70.8	80	58.6	67.3	76.1	54.9	63.1	71.3	51	58.6	66.2	46.7	53.7	60.7
		62	THC	71.3	71.3	81.4	67.4	67.4	79	63.1	63.1	74.1	58.7	58.7	68.9	53.7	53.7	63.1
			SHC	57.7	69.6	81.4	55.7	67.4	79	52.2	63.1	74.1	48.5	58.7	68.9	44.4	53.7	63.1
		67	THC	76.7	76.7	76.7	73.7	73.7	73.7	68.5	68.5	68.5	62.4	62.4	64.4	56	56	62
			SHC	44.7	56.2	67.8	44.1	56.1	68.1	42.3	54.5	66.7	40.1	52.2	64.4	37.8	49.9	62
		72	THC	79.3	79.3	79.3	79	79	79	76.3	76.3	76.3	71.1	71.1	71.1	64.4	64.4	64.4
			SHC	30.5	41.3	52.1	30.7	42.1	53.6	29.9	41.8	53.8	28.3	40.4	52.5	26.2	38.3	50.5
		76	THC	–	80	80	–	80.8	80.8	–	79.8	79.8	–	76.5	76.5	–	71	71
			SHC	–	31.2	43.5	–	31.4	43.6	–	31.1	43.3	–	30.2	42.4	–	28.6	40.8
2700 Cfm	EAT (wb)	58	THC	73.3	73.3	82.8	70	70	79.1	65.8	65.8	74.3	61	61	68.9	55.9	55.9	63.2
			SHC	63.7	73.3	82.8	60.9	70	79.1	57.2	65.8	74.3	53.1	61	68.9	48.7	55.9	63.2
		62	THC	73.3	73.3	85.8	70.1	70.1	82.3	65.8	65.8	77.3	61.1	61.1	71.7	56	56	65.7
			SHC	60.5	73.2	85.8	58	70.1	82.3	54.4	65.8	77.3	50.5	61.1	71.7	46.3	56	65.7
		67	THC	77.5	77.5	77.5	74.9	74.9	74.9	70	70	71.5	63.7	63.7	69.2	57.2	57.2	66.6
			SHC	46.1	58.6	71.1	46.1	59.3	72.5	44.7	58.1	71.5	42.4	55.8	69.2	40	53.3	66.6
		72	THC	79.6	79.6	79.6	79.5	79.5	79.5	77.2	77.2	77.2	72.3	72.3	72.3	65.6	65.6	65.6
			SHC	30.8	42.3	53.7	31.1	43.4	55.8	30.7	43.7	56.7	29.2	42.5	55.9	27.2	40.6	54.1
		76	THC	–	80.1	80.1	–	81.1	81.1	–	80.3	80.3	–	77.1	77.1	–	71.9	71.9
			SHC	–	31.6	44.5	–	32	44.9	–	31.8	44.9	–	31	44.3	–	29.6	43
3000 Cfm	EAT (wb)	58	THC	75	75	84.8	72.2	72.2	81.6	68.1	68.1	76.9	63.1	63.1	71.2	57.8	57.8	65.3
			SHC	65.3	75	84.8	62.9	72.2	81.6	59.2	68.1	76.9	54.9	63.1	71.2	50.3	57.8	65.3
		62	THC	75.1	75.1	88.1	72.3	72.3	84.8	68.1	68.1	79.9	63.1	63.1	74.1	57.9	57.9	67.9
			SHC	62.1	75.1	88.1	59.8	72.3	84.8	56.3	68.1	79.9	52.2	63.1	74.1	47.8	57.9	67.9
		67	THC	77.9	77.9	77.9	75.9	75.9	76.5	71.1	71.1	76	65	65	73.8	58.4	58.4	70.9
			SHC	47.3	60.6	73.8	48	62.2	76.5	46.8	61.4	76	44.6	59.2	73.8	42.1	56.5	70.9
		72	THC	79.3	79.3	79.3	79.9	79.9	79.9	77.9	77.9	77.9	73.2	73.2	73.2	66.5	66.5	66.5
			SHC	30.9	42.8	54.6	31.6	44.6	57.7	31.3	45.3	59.3	30	44.5	59	28.1	42.7	57.4
		76	THC	–	80.1	80.1	–	81.2	81.2	–	80.6	80.6	–	77.6	77.6	–	72.5	72.5
			SHC	–	32	45.4	–	32.4	46	–	32.5	46.4	–	31.8	46.1	–	30.6	45.1

LEGEND

– – Do not operate in this region
Cfm – Cubic feet per minute (supply air)
EAT(db) – Entering air temperature (dry bulb)
EAT(wb) – Entering air temperature (wet bulb)
SHC – Sensible heat capacity
THC – Total capacity

Table 18 – COOLING CAPACITIES 2-STAGE COOLING 7.5 TONS

50HCQD08				AMBIENT TEMPERATURE														
				85			95			105			115			125		
				EAT (db)			EAT (db)			EAT (db)			EAT (db)			EAT (db)		
				75	80	85	75	80	85	75	80	85	75	80	85	75	80	85
2250Cfm	EAT (wb)	58	THC	81.1	81.1	92.1	76.4	76.4	86.8	73.0	73.0	82.9	69.3	69.3	78.7	65.2	65.2	74.1
			SHC	70.1	81.1	92.1	66.0	76.4	86.8	63.1	73.0	82.9	59.8	69.3	78.7	56.4	65.2	74.1
		62	THC	86.2	86.2	86.2	80.1	80.1	83.0	75.6	75.6	80.9	70.8	70.8	78.6	65.9	65.9	76.1
			SHC	62.5	74.2	85.9	59.7	71.3	83.0	57.6	69.3	80.9	55.4	67.0	78.6	53	64.5	76.1
		67	THC	94.3	94.3	94.3	87.6	87.6	87.6	82.8	82.8	82.8	77.6	77.6	77.6	72.1	72.1	72.1
			SHC	51.3	63.0	74.6	48.5	60.1	71.8	46.5	58.1	69.8	44.4	56.0	67.7	42.2	53.8	65.5
		72	THC	102.9	102.9	102.9	95.6	95.6	95.6	90.3	90.3	90.3	84.7	84.7	84.7	78.7	78.7	78.7
			SHC	39.6	51.4	63.1	36.9	48.6	60.3	34.9	46.6	58.3	32.9	44.5	56.2	30.7	42.4	54.1
		76	THC	–	109.9	109.9	–	102.1	102.1	–	96.4	96.4	–	90.5	90.5	–	84.1	84.1
			SHC	–	41.8	54.2	–	39.1	51.4	–	37.2	49.4	–	35.2	47.2	–	33.1	45
2625 Cfm	EAT (wb)	58	THC	85.7	85.7	97.3	80.6	80.6	91.5	76.9	76.9	87.3	72.8	72.8	82.7	68.5	68.5	77.8
			SHC	74.0	85.7	97.3	69.6	80.6	91.5	66.4	76.9	87.3	62.9	72.8	82.7	59.2	68.5	77.8
		62	THC	89.0	89.0	94.2	82.6	82.6	91.1	78.0	78.0	88.7	73.3	73.3	85.3	68.5	68.5	81
			SHC	67.3	80.7	94.2	64.3	77.7	91.1	62.1	75.4	88.7	59.3	72.3	85.3	56.1	68.5	81
		67	THC	97.2	97.2	97.2	90.1	90.1	90.1	85.0	85.0	85.0	79.6	79.6	79.6	73.8	73.8	73.8
			SHC	54.3	67.8	81.2	51.4	64.9	78.3	49.4	62.8	76.3	47.3	60.7	74.1	45	58.5	71.9
		72	THC	105.8	105.8	105.8	98.1	98.1	98.1	92.6	92.6	92.6	86.7	86.7	86.7	80.5	80.5	80.5
			SHC	40.9	54.4	67.9	38.1	51.5	65.0	36.1	49.5	63.0	34.0	47.4	60.9	31.8	45.3	58.7
		76	THC	–	112.7	112.7	–	104.5	104.5	–	98.6	98.6	–	92.4	92.4	–	85.8	85.8
			SHC	–	43.5	57.6	–	40.7	54.6	–	38.7	52.5	–	36.7	50.4	–	34.5	48.1
3000 Cfm	EAT (wb)	58	THC	89.5	89.5	101.6	84.1	84.1	95.5	80.1	80.1	90.9	75.7	75.7	86.0	71.2	71.2	80.8
			SHC	77.3	89.5	101.6	72.6	84.1	95.5	69.2	80.1	90.9	65.5	75.7	86.0	61.5	71.2	80.8
		62	THC	91.3	91.3	101.9	84.8	84.8	97.7	80.3	80.3	94.3	75.8	75.8	89.5	71.2	71.2	84.1
			SHC	71.7	86.8	101.9	68.2	83.0	97.7	65.5	79.9	94.3	62.1	75.8	89.5	58.3	71.2	84.1
		67	THC	99.5	99.5	99.5	92.1	92.1	92.1	86.8	86.8	86.8	81.1	81.1	81.1	75.1	75.1	78.2
			SHC	57.2	72.4	87.5	54.2	69.4	84.6	52.2	67.4	82.6	50.0	65.2	80.4	47.8	63	78.2
		72	THC	108.1	108.1	108.1	100.0	100.0	100.0	94.3	94.3	94.3	88.2	88.2	88.2	81.8	81.8	81.8
			SHC	42.0	57.2	72.4	39.1	54.3	69.5	37.1	52.3	67.4	35.0	50.2	65.3	32.9	48	63.1
		76	THC	–	114.8	114.8	–	106.3	106.3	–	100.3	100.3	–	93.8	93.8	–	87	87
			SHC	–	44.9	60.6	–	42.0	57.6	–	40.1	55.5	–	38.0	53.3	–	35.8	51
3375 Cfm	EAT (wb)	58	THC	92.8	92.8	105.4	87.0	87.0	98.8	82.8	82.8	94.0	78.2	78.2	88.9	73.4	73.4	83.4
			SHC	80.2	92.8	105.4	75.2	87.0	98.8	71.5	82.8	94.0	67.6	78.2	88.9	63.4	73.4	83.4
		62	THC	93.6	93.6	108.0	87.1	87.1	102.8	82.8	82.8	97.8	78.3	78.3	92.5	73.5	73.5	86.8
			SHC	75.3	91.6	108.0	71.3	87.1	102.8	67.9	82.8	97.8	64.1	78.3	92.5	60.1	73.5	86.8
		67	THC	101.3	101.3	101.3	93.6	93.6	93.6	88.1	88.1	88.6	82.3	82.3	86.4	76.2	76.2	84
			SHC	59.9	76.8	93.6	56.9	73.8	90.7	54.8	71.7	88.6	52.6	69.5	86.4	50.3	67.2	84
		72	THC	109.8	109.8	109.8	101.5	101.5	101.5	95.6	95.6	95.6	89.3	89.3	89.3	82.8	82.8	82.8
			SHC	43.0	59.9	76.7	40.1	56.9	73.8	38.1	54.9	71.7	36.0	52.8	69.6	33.8	50.6	67.4
		76	THC	–	116.4	116.4	–	107.6	107.6	–	101.4	101.4	–	94.8	94.8	–	87.9	87.9
			SHC	–	46.1	63.3	–	43.2	60.2	–	41.2	58.1	–	39.1	55.9	–	37	53.6
3750 Cfm	EAT (wb)	58	THC	95.6	95.6	108.6	89.5	89.5	101.7	85.1	85.1	96.7	80.4	80.4	91.3	75.3	75.3	85.5
			SHC	82.6	95.6	108.6	77.4	89.5	101.7	73.6	85.1	96.7	69.4	80.4	91.3	65.1	75.3	85.5
		62	THC	95.7	95.7	113.0	89.6	89.6	105.8	85.2	85.2	100.6	80.4	80.4	95.0	75.4	75.4	89
			SHC	78.3	95.7	113.0	73.4	89.6	105.8	69.7	85.2	100.6	65.8	80.4	95.0	61.7	75.4	89
		67	THC	102.7	102.7	102.7	94.8	94.8	96.6	89.2	89.2	94.4	83.3	83.3	92.1	77.1	77.1	89.6
			SHC	62.5	81.0	99.6	59.5	78.0	96.6	57.4	75.9	94.4	55.1	73.6	92.1	52.8	71.2	89.6
		72	THC	111.3	111.3	111.3	102.8	102.8	102.8	96.7	96.7	96.7	90.3	90.3	90.3	83.6	83.6	83.6
			SHC	44.0	62.4	80.8	41.1	59.5	77.9	39.0	57.4	75.8	36.9	55.3	73.7	34.7	53.1	71.5
		76	THC	–	117.5	117.5	–	108.6	108.6	–	102.3	102.3	–	95.6	95.6	–	88.6	88.6
			SHC	–	47.2	65.7	–	44.3	62.6	–	42.3	60.5	–	40.2	58.2	–	38	55.9

LEGEND

– – Do not operate in this region
Cfm – Cubic feet per minute (supply air)
EAT(db) – Entering air temperature (dry bulb)
EAT(wb) – Entering air temperature (wet bulb)
SHC – Sensible heat capacity
THC – Total capacity

Table 19 – COOLING CAPACITIES 2-STAGE COOLING 8.5 TONS

50HCQD09				AMBIENT TEMPERATURE														
				85			95			105			115			125		
				EAT (db)			EAT (db)			EAT (db)			EAT (db)			EAT (db)		
				75	80	85	75	80	85	75	80	85	75	80	85	75	80	85
2550 Cfm	EAT (wb)	58	THC	85.8	85.8	97.8	80.9	80.9	91.8	75.7	75.7	85.9	70.2	70.2	79.7	64.4	64.4	73.1
			SHC	73.9	85.8	97.8	70	80.9	91.8	65.5	75.7	85.9	60.7	70.2	79.7	55.7	64.4	73.1
		62	THC	90.4	90.4	94.5	83.8	83.8	91.4	76.8	76.8	88	70.5	70.5	82.7	64.5	64.5	76.1
			SHC	67.8	81.1	94.5	64.8	78.1	91.4	61.6	74.8	88	57.6	70.1	82.7	52.8	64.5	76.1
		67	THC	101.6	101.6	101.6	95	95	95	87.4	87.4	87.4	79.3	79.3	79.3	71	71	71
			SHC	55.5	68.7	81.9	52.9	66.3	79.7	49.9	63.3	76.7	46.9	60.3	73.7	43.8	57.2	70.6
		72	THC	109.3	109.3	109.3	106	106	106	99.6	99.6	99.6	91.4	91.4	91.4	82.7	82.7	82.7
			SHC	41.1	54.1	67.2	39.9	53.3	66.6	37.7	51.1	64.6	34.9	48.3	61.7	32	45.4	58.8
		76	THC	–	114.5	114.5	–	111.2	111.2	–	107.7	107.7	–	101	101	–	92.6	92.6
			SHC	–	42.6	56.7	–	41.6	55.6	–	40.5	54.5	–	38.3	51.9	–	35.6	49.2
2975 Cfm	EAT (wb)	58	THC	91.8	91.8	104.5	86.4	86.4	98	80.7	80.7	91.6	74.7	74.7	84.8	68.6	68.6	77.8
			SHC	79.1	91.8	104.5	74.7	86.4	98	69.8	80.7	91.6	64.6	74.7	84.8	59.3	68.6	77.8
		62	THC	94.4	94.4	104.4	87.5	87.5	100.5	81	81	95.1	74.8	74.8	88.3	68.7	68.7	81
			SHC	73.8	89.1	104.4	70.3	85.4	100.5	66.1	80.6	95.1	61.3	74.8	88.3	56.3	68.7	81
		67	THC	104.3	104.3	104.3	98.6	98.6	98.6	90.6	90.6	90.6	82.1	82.1	82.1	73.4	73.4	78.4
			SHC	58.7	73.7	88.6	56.8	72.3	87.8	53.8	69.3	84.8	50.7	66.1	81.6	47.5	62.9	78.4
		72	THC	111.3	111.3	111.3	108	108	108	102.7	102.7	102.7	94.5	94.5	94.5	85.5	85.5	85.5
			SHC	42.2	56.7	71.3	41	56.1	71.3	39.3	54.8	70.3	36.6	52.1	67.6	33.7	49.2	64.7
		76	THC	–	116.3	116.3	–	112.7	112.7	–	109.2	109.2	–	103.5	103.5	–	95.4	95.4
			SHC	–	44.3	60.6	–	43.1	59	–	41.9	57.7	–	40.2	56	–	37.7	53.4
3400 Cfm	EAT (wb)	58	THC	96.6	96.6	109.9	91.1	91.1	103.4	85.1	85.1	96.6	78.7	78.7	89.3	72.1	72.1	81.8
			SHC	83.3	96.6	109.9	78.8	91.1	103.4	73.6	85.1	96.6	68.1	78.7	89.3	62.4	72.1	81.8
		62	THC	97.7	97.7	112.8	91.7	91.7	106.8	85.3	85.3	100.7	78.8	78.8	93	72.2	72.2	85.2
			SHC	78.6	95.7	112.8	74.4	90.6	106.8	69.9	85.3	100.7	64.6	78.8	93	59.2	72.2	85.2
		67	THC	106	106	106	101.2	101.2	101.2	93	93	93	84.4	84.4	89.2	75.5	75.5	85.8
			SHC	61.6	78.1	94.7	60.2	77.7	95.1	57.4	74.9	92.4	54.2	71.7	89.2	50.9	68.4	85.8
		72	THC	112.7	112.7	112.7	109.3	109.3	109.3	104.8	104.8	104.8	96.8	96.8	96.8	87.7	87.7	87.7
			SHC	43.1	59	75	41.9	58.5	75.2	40.7	58	75.4	38.1	55.7	73.2	35.2	52.8	70.4
		76	THC	–	117.6	117.6	–	113.9	113.9	–	110.2	110.2	–	105.2	105.2	–	97.2	97.2
			SHC	–	45.4	63	–	44.2	61.5	–	43.1	60.5	–	41.8	59.4	–	39.5	57.2
3825 Cfm	EAT (wb)	58	THC	100.5	100.5	114.2	95.1	95.1	107.9	88.9	88.9	100.8	82.2	82.2	93.3	75.3	75.3	85.5
			SHC	86.7	100.5	114.2	82.3	95.1	107.9	76.9	88.9	100.8	71.1	82.2	93.3	65.2	75.3	85.5
		62	THC	100.6	100.6	119	95.4	95.4	112.5	89	89	105	82.3	82.3	97.1	75.4	75.4	89
			SHC	82.3	100.6	119	78.2	95.4	112.5	72.9	89	105	67.5	82.3	97.1	61.8	75.4	89
		67	THC	107.3	107.3	107.3	103.1	103.1	103.1	95.1	95.1	99.8	86.3	86.3	96.4	77.3	77.3	92.6
			SHC	64.1	82.2	100.2	63.4	82.7	102	60.8	80.3	99.8	57.6	77	96.4	54.2	73.4	92.6
		72	THC	113.8	113.8	113.8	110.3	110.3	110.3	106.3	106.3	106.3	98.5	98.5	98.5	89.3	89.3	89.3
			SHC	44	61.2	78.3	42.7	60.8	78.9	41.8	61	80.1	39.5	59	78.5	36.6	56.2	75.7
		76	THC	–	118.6	118.6	–	114.8	114.8	–	110.9	110.9	–	106.3	106.3	–	98.5	98.5
			SHC	–	46.4	65.1	–	45.2	63.9	–	44.2	63	–	43.2	62.5	–	41.1	60.7
4250 Cfm	EAT (wb)	58	THC	103.2	103.2	117.2	98.5	98.5	111.8	92.2	92.2	104.6	85.3	85.3	96.8	78.1	78.1	88.7
			SHC	89.1	103.2	117.2	85.2	98.5	111.8	79.7	92.2	104.6	73.8	85.3	96.8	67.6	78.1	88.7
		62	THC	103.2	103.2	121.8	98.6	98.6	116.3	92.3	92.3	108.9	85.4	85.4	100.7	78.2	78.2	92.3
			SHC	84.6	103.2	121.8	80.8	98.6	116.3	75.6	92.3	108.9	70	85.4	100.7	64.1	78.2	92.3
		67	THC	108.3	108.3	108.3	104.5	104.5	108.3	96.8	96.8	106.7	88	88	103.2	79.3	79.3	97.6
			SHC	66.5	86	105.5	66.3	87.3	108.3	64	85.3	106.7	60.7	82	103.2	56.6	77.1	97.6
		72	THC	114.7	114.7	114.7	111.1	111.1	111.1	107.3	107.3	107.3	99.9	99.9	99.9	90.6	90.6	90.6
			SHC	44.8	63.1	81.5	43.5	62.9	82.3	42.8	63.5	84.2	40.7	62.1	83.5	37.9	59.4	81
		76	THC	–	119.4	119.4	–	115.5	115.5	–	111.4	111.4	–	107.1	107.1	–	99.5	99.5
			SHC	–	47.3	67	–	46.2	66	–	45.2	65.3	–	44.5	65.3	–	42.6	63.9

LEGEND

– – Do not operate in this region
Cfm – Cubic feet per minute (supply air)
EAT(db) – Entering air temperature (dry bulb)
EAT(wb) – Entering air temperature (wet bulb)
SHC – Sensible heat capacity
THC – Total capacity

Table 20 – COOLING CAPACITIES 2-STAGE COOLING 10 TONS

50HCQD12				AMBIENT TEMPERATURE														
				85			95			105			115			125		
				EA (dB)			EA (dB)			EA (dB)			EA (dB)			EA (dB)		
				75	80	85	75	80	85	75	80	85	75	80	85	75	80	85
3000 Cfm	EAT (wb)	58	THC	106.0	106.0	119.9	102.0	102.0	115.3	97.6	97.6	110.4	92.9	92.9	105.0	87.5	87.5	98.9
			SHC	92.2	106.0	119.9	88.6	102.0	115.3	84.9	97.6	110.4	80.7	92.9	105.0	76.1	87.5	98.9
		62	THC	112.3	112.3	113.3	107.1	107.1	110.7	101.5	101.5	107.9	95.4	95.4	104.7	88.9	88.9	100.5
			SHC	83.4	98.3	113.3	80.8	95.8	110.7	78.1	93.0	107.9	75.1	89.9	104.7	71.5	86.0	100.5
		67	THC	123.3	123.3	123.3	117.6	117.6	117.6	111.4	111.4	111.4	104.5	104.5	104.5	97.0	97.0	97.0
			SHC	69.2	84.3	99.3	66.7	81.7	96.8	64.1	79.1	94.1	61.2	76.2	91.2	58.0	73.0	88.0
		72	THC	135.2	135.2	135.2	128.8	128.8	128.8	121.9	121.9	121.9	114.4	114.4	114.4	106.2	106.2	106.2
			SHC	54.5	69.8	85.0	52.0	67.3	82.5	49.4	64.6	79.8	46.5	61.7	76.8	43.4	58.5	73.6
		76	THC	–	145.1	145.1	–	138.2	138.2	–	130.7	130.7	–	122.6	122.6	–	113.7	113.7
			SHC	–	57.9	74.3	–	55.4	71.8	–	52.8	69.1	–	50.0	66.1	–	46.9	62.8
3500 Cfm	EAT (wb)	58	THC	111.6	111.6	126.2	107.3	107.3	121.4	102.6	102.6	116.0	97.4	97.4	110.2	91.6	91.6	103.6
			SHC	97.1	111.6	126.2	93.3	107.3	121.4	89.2	102.6	116.0	84.7	97.4	110.2	79.6	91.6	103.6
		62	THC	115.9	115.9	123.6	110.5	110.5	120.7	104.6	104.6	117.4	98.6	98.6	112.5	92.1	92.1	106.9
			SHC	89.4	106.5	123.6	86.7	103.7	120.7	83.7	100.5	117.4	79.8	96.1	112.5	75.4	91.2	106.9
		67	THC	127.0	127.0	127.0	120.9	120.9	120.9	114.3	114.3	114.3	107.1	107.1	107.1	99.2	99.2	99.2
			SHC	73.2	90.5	107.8	70.7	87.9	105.2	67.9	85.1	102.4	64.9	82.2	99.4	61.7	78.9	96.1
		72	THC	139.1	139.1	139.1	132.3	132.3	132.3	125.0	125.0	125.0	117.0	117.0	117.0	108.4	108.4	108.4
			SHC	56.4	73.8	91.3	53.8	71.2	88.6	51.1	68.4	85.8	48.1	65.4	82.8	44.9	62.2	79.5
		76	THC	–	149.0	149.0	–	141.7	141.7	–	133.8	133.8	–	125.2	125.2	–	–	–
			SHC	–	60.3	79.1	–	57.7	76.3	–	54.9	73.3	–	52.0	70.1	–	–	–
4000 Cfm	EAT (wb)	58	THC	116.5	116.5	131.7	111.8	111.8	126.5	106.8	106.8	120.7	101.2	101.2	114.4	95.0	95.0	107.4
			SHC	101.2	116.5	131.7	97.2	111.8	126.5	92.8	106.8	120.7	88.0	101.2	114.4	82.5	95.0	107.4
		62	THC	118.9	118.9	133.1	113.5	113.5	128.6	107.8	107.8	123.8	101.7	101.7	118.4	95.1	95.1	111.7
			SHC	94.9	114.0	133.1	91.4	110.0	128.6	87.6	105.7	123.8	83.4	100.9	118.4	78.5	95.1	111.7
		67	THC	129.9	129.9	129.9	123.5	123.5	123.5	116.6	116.6	116.6	109.1	109.1	109.1	100.9	100.9	103.8
			SHC	77.0	96.4	115.9	74.4	93.8	113.2	71.5	90.9	110.3	68.5	87.8	107.2	65.2	84.5	103.8
		72	THC	142.0	142.0	142.0	135.0	135.0	135.0	127.3	127.3	127.3	119.1	119.1	119.1	110.1	110.1	110.1
			SHC	58.0	77.6	97.2	55.4	74.9	94.5	52.6	72.1	91.6	49.6	69.0	88.5	46.3	65.7	85.1
		76	THC	–	152.0	152.0	–	144.4	144.4	–	136.2	136.2	–	–	–	–	–	–
			SHC	–	62.4	83.1	–	59.7	80.2	–	56.9	77.2	–	–	–	–	–	–
4500 Cfm	EAT (wb)	58	THC	120.6	120.6	136.3	115.7	115.7	130.8	110.3	110.3	124.7	104.4	104.4	118.0	97.8	97.8	110.5
			SHC	104.8	120.6	136.3	100.5	115.7	130.8	95.9	110.3	124.7	90.7	104.4	118.0	85.0	97.8	110.5
		62	THC	122.1	122.1	139.4	116.6	116.6	134.6	110.6	110.6	129.9	104.4	104.4	122.7	97.8	97.8	114.9
			SHC	98.8	119.1	139.4	95.1	114.9	134.6	91.3	110.6	129.9	86.2	104.4	122.7	80.7	97.8	114.9
		67	THC	132.2	132.2	132.2	125.5	125.5	125.5	118.4	118.4	118.4	110.6	110.6	114.6	102.2	102.2	111.0
			SHC	80.6	102.1	123.7	77.8	99.4	120.9	74.9	96.4	117.9	71.8	93.2	114.6	68.4	89.7	111.0
		72	THC	144.4	144.4	144.4	137.1	137.1	137.1	129.2	129.2	129.2	120.7	120.7	120.7	111.4	111.4	111.4
			SHC	59.5	81.2	102.8	56.8	78.4	100.1	54.0	75.5	97.1	50.9	72.4	93.9	47.6	69.1	90.5
		76	THC	–	154.4	154.4	–	146.5	146.5	–	138.0	138.0	–	–	–	–	–	–
			SHC	–	64.2	86.9	–	61.5	84.0	–	58.7	81.0	–	–	–	–	–	–
5000 Cfm	EAT (wb)	58	THC	124.1	124.1	140.4	119.0	119.0	134.5	113.3	113.3	128.1	107.1	107.1	121.1	100.1	100.1	113.2
			SHC	107.9	124.1	140.4	103.4	119.0	134.5	98.5	113.3	128.1	93.1	107.1	121.1	87.0	100.1	113.2
		62	THC	124.9	124.9	144.9	119.2	119.2	140.0	113.4	113.4	133.2	107.1	107.1	125.8	100.2	100.2	117.7
			SHC	102.2	123.6	144.9	98.4	119.2	140.0	93.6	113.4	133.2	88.4	107.1	125.8	82.7	100.2	117.7
		67	THC	134.0	134.0	134.0	127.2	127.2	128.2	119.8	119.8	125.1	111.9	111.9	121.6	103.3	103.3	117.6
			SHC	83.9	107.5	131.1	81.1	104.7	128.2	78.2	101.6	125.1	74.9	98.3	121.6	71.3	94.5	117.6
		72	THC	146.3	146.3	146.3	138.8	138.8	138.8	130.7	130.7	130.7	121.9	121.9	121.9	112.5	112.5	112.5
			SHC	60.9	84.6	108.3	58.1	81.8	105.4	55.2	78.8	102.4	52.2	75.6	99.1	48.8	72.2	95.6
		76	THC	–	156.4	156.4	–	148.2	148.2	–	–	–	–	–	–	–	–	–
			SHC	–	66.0	90.6	–	63.3	87.6	–	–	–	–	–	–	–	–	–

LEGEND

– – Do not operate in this region
Cfm – Cubic feet per minute (supply air)
EAT(db) – Entering air temperature (dry bulb)
EAT(wb) – Entering air temperature (wet bulb)
SHC – Sensible heat capacity
THC – Total capacity

Table 21 – HEATING CAPACITIES **3 TONS**

50HCQA04											
RETURN AIR (°F db)	CFM (STANDARD AIR)		TEMPERATURE AIR ENTERING OUTDOOR COIL (°F db AT 70% RH)								
			–10	0	10	17	30	40	47	50	60
55	900	Capacity		13.3	17.2	20.0	26.0	31.3	35.6	37.0	42.7
		Int. Cap.		12.3	15.8	18.3	22.8	31.3	35.6	37.0	42.7
		kW		1.9	2.0	2.1	2.2	2.4	2.6	2.7	2.9
	1200	Capacity		13.8	17.8	20.8	27.0	32.8	36.9	38.3	44.1
		Int. Cap.		12.7	16.3	18.9	23.6	32.8	36.9	38.3	44.1
		kW		1.8	1.9	2.0	2.1	2.3	2.4	2.4	2.6
	1500	Capacity			18.7	21.8	28.2	34.0	38.1	39.4	45.1
		Int. Cap.			17.2	19.8	24.7	34.0	38.1	39.4	45.1
		kW			2.0	2.1	2.2	2.4	2.4	2.5	2.6
70	900	Capacity	7.5	11.0	14.9	17.8	23.6	28.5	32.7	34.2	40.4
		Int. Cap.	6.9	10.2	13.7	16.2	20.7	28.5	32.7	34.2	40.4
		kW	2.1	2.2	2.3	2.4	2.6	2.7	2.9	3.0	3.3
	1200	Capacity	7.9	11.6	15.6	18.6	24.7	29.9	34.6	36.0	41.9
		Int. Cap.	7.3	10.7	14.3	16.9	21.6	29.9	34.6	36.0	41.9
		kW	2.0	2.1	2.2	2.3	2.4	2.6	2.8	2.8	3.0
	1500	Capacity	8.7	12.4	16.5	19.6	25.8	31.3	35.9	37.3	43.1
		Int. Cap.	8.0	11.4	15.1	17.8	22.6	31.3	35.9	37.3	43.1
		kW	2.2	2.2	2.3	2.4	2.5	2.6	2.8	2.8	3.0
80	900	Capacity	5.7	9.3	13.2	16.1	21.9	26.8	30.5	32.1	38.4
		Int. Cap.	5.3	8.5	12.1	14.7	19.2	26.8	30.5	32.1	38.4
		kW	2.3	2.4	2.5	2.6	2.8	3.0	3.2	3.2	3.6
	1200	Capacity	6.1	9.8	13.9	16.9	22.9	28.1	32.3	33.9	40.3
		Int. Cap.	5.6	9.0	12.7	15.4	20.1	28.1	32.3	33.9	40.3
		kW	2.2	2.3	2.4	2.5	2.7	2.8	3.0	3.1	3.3
	1500	Capacity	6.8	10.6	14.8	17.9	24.1	29.4	34.0	35.6	41.6
		Int. Cap.	6.3	9.8	13.6	16.3	21.1	29.4	34.0	35.6	41.6
		kW	2.4	2.5	2.5	2.6	2.7	2.9	3.0	3.1	3.3

– Indicates operation not permissible

LEGEND

Capacity – Instantaneous Capacity (1000 Btuh) includes indoor fan motor heat @AHRI static conditions
Int. Cap. – Integrated Capacity is Instantaneous Capacity minus the effects of frost on the outdoor coil and the heat required to defrost
RH – Relative Humidity
db – Dry Bulb

Table 22 – HEATING CAPACITIES 4 TONS

50HCQA05											
RETURN AIR (°F db)	CFM (STANDARD AIR)		TEMPERATURE AIR ENTERING OUTDOOR COIL (°F db AT 70% RH)								
			–10	0	10	17	30	40	47	50	60
55	1200	Capacity		18.5	23.8	27.7	35.3	41.9	47.6	49.3	56.5
		Int. Cap.		17.1	21.8	25.2	30.9	41.9	47.6	49.3	56.5
		kW		2.6	2.7	2.8	3.1	3.3	3.6	3.6	3.9
	1600	Capacity		18.8	24.3	28.4	36.1	43.6	48.7	50.4	57.4
		Int. Cap.		17.3	22.3	25.9	31.6	43.6	48.7	50.4	57.4
		kW		2.5	2.6	2.6	2.8	3.1	3.2	3.3	3.5
	2000	Capacity		19.8	25.3	29.7	37.5	44.9	49.8	51.4	58.0
		Int. Cap.		18.2	23.2	27.1	32.9	44.9	49.8	51.4	58.0
		kW		2.6	2.7	2.8	2.9	3.2	3.3	3.3	3.5
70	1200	Capacity	10.9	16.2	21.4	25.2	32.8	38.9	44.0	46.0	54.0
		Int. Cap.	10.1	14.9	19.7	23.0	28.7	38.9	44.0	46.0	54.0
		kW	2.8	2.9	3.1	3.2	3.5	3.7	4.0	4.1	4.5
	1600	Capacity	11.2	16.6	22.0	25.9	34.0	40.0	46.1	48.0	55.2
		Int. Cap.	10.3	15.3	20.2	23.6	29.8	40.0	46.1	48.0	55.2
		kW	2.7	2.8	2.9	3.0	3.2	3.4	3.7	3.8	4.0
	2000	Capacity	12.1	17.7	23.2	27.1	35.2	41.8	47.7	49.4	56.2
		Int. Cap.	11.2	16.2	21.2	24.7	30.9	41.8	47.7	49.4	56.2
		kW	2.9	2.9	3.0	3.1	3.3	3.5	3.7	3.8	4.0
80	1200	Capacity	8.9	14.3	19.6	23.3	30.8	37.4	41.8	43.6	51.8
		Int. Cap.	8.2	13.1	18.0	21.3	27.0	37.4	41.8	43.6	51.8
		kW	3.0	3.2	3.3	3.5	3.8	4.1	4.3	4.4	4.8
	1600	Capacity	9.2	14.7	20.2	24.1	31.9	38.4	43.4	45.5	53.5
		Int. Cap.	8.5	13.6	18.6	22.0	28.0	38.4	43.4	45.5	53.5
		kW	2.9	3.0	3.2	3.3	3.5	3.8	4.0	4.1	4.4
	2000	Capacity	10.1	15.8	21.4	25.3	33.4	39.8	45.4	47.4	54.7
		Int. Cap.	9.4	14.5	19.6	23.1	29.2	39.8	45.4	47.4	54.7
		kW	3.1	3.2	3.3	3.4	3.6	3.8	4.0	4.1	4.4

▨ – Indicates operation not permissible

LEGEND

Capacity – Instantaneous Capacity (1000 Btuh) includes indoor fan motor heat @AHRI static conditions
Int. Cap. – Integrated Capacity is Instantaneous Capacity minus the effects of frost on the outdoor coil and the heat required to defrost
RH – Relative Humidity
db – Dry Bulb

Table 23 – HEATING CAPACITIES **5 TONS**

50HCQA06											
RETURN AIR (°F db)	CFM (STANDARD AIR)		TEMPERATURE AIR ENTERING OUTDOOR COIL (°F db AT 70% RH)								
			–10	0	10	17	30	40	47	50	60
55	1500	Capacity		22.0	28.5	33.3	43.5	51.4	58.0	60.1	68.6
		Int. Cap.		20.3	26.1	30.4	38.1	51.4	58.0	60.1	68.6
		kW		2.9	3.1	3.2	3.5	3.7	3.8	3.9	4.1
	2000	Capacity		23.9	30.5	35.5	45.7	54.1	60.4	62.3	69.9
		Int. Cap.		22.0	28.0	32.4	40.1	54.1	60.4	62.3	69.9
		kW		3.2	3.3	3.4	3.6	3.8	3.9	3.9	4.1
	2500	Capacity		25.0	31.7	36.9	47.1	55.2	60.7	62.3	68.8
		Int. Cap.		23.0	29.1	33.6	41.3	55.2	60.7	62.3	68.8
		kW		3.3	3.4	3.5	3.7	3.8	3.9	3.9	4.0
70	1500	Capacity		18.9	25.3	30.1	40.1	48.4	54.8	56.8	65.4
		Int. Cap.		17.4	23.3	27.5	35.2	48.4	54.8	56.8	65.4
		kW		3.4	3.5	3.6	3.9	4.2	4.4	4.5	4.7
	2000	Capacity		20.7	27.4	32.3	43.0	50.9	57.4	59.3	67.4
		Int. Cap.		19.1	25.1	29.4	37.7	50.9	57.4	59.3	67.4
		kW		3.6	3.7	3.8	4.1	4.3	4.4	4.4	4.6
	2500	Capacity		21.9	28.6	33.6	44.4	52.5	58.5	60.3	67.3
		Int. Cap.		20.1	26.3	30.7	38.9	52.5	58.5	60.3	67.3
		kW		3.7	3.8	3.9	4.1	4.3	4.4	4.4	4.6
80	1500	Capacity	10.3	16.5	23.1	27.8	37.4	46.2	52.4	54.7	63.2
		Int. Cap.	9.5	15.2	21.2	25.4	32.8	46.2	52.4	54.7	63.2
		kW	3.5	3.7	3.9	4.0	4.3	4.6	4.8	4.9	5.2
	2000	Capacity	12.0	18.4	25.1	30.0	40.1	48.9	55.2	57.4	65.4
		Int. Cap.	11.1	16.9	23.0	27.4	35.2	48.9	55.2	57.4	65.4
		kW	3.8	3.9	4.1	4.2	4.4	4.6	4.8	4.9	5.1
	2500	Capacity	13.0	19.5	26.3	31.4	41.9	50.5	56.6	58.4	65.7
		Int. Cap.	12.0	18.0	24.2	28.6	36.7	50.5	56.6	58.4	65.7
		kW	3.9	4.0	4.2	4.3	4.5	4.7	4.8	4.8	5.0

▨ – Indicates operation not permissible

LEGEND

Capacity – Instantaneous Capacity (1000 Btuh) includes indoor fan motor heat @AHRI static conditions

Int. Cap. – Integrated Capacity is Instantaneous Capacity minus the effects of frost on the outdoor coil and the heat required to defrost

RH – Relative Humidity

db – Dry Bulb

Table 24 – HEATING CAPACITIES 6 TONS

50HCQA07											
RETURN AIR (°F db)	CFM (STANDARD AIR)		TEMPERATURE AIR ENTERING OUTDOOR COIL (°F db AT 70% RH)								
			–10	0	10	17	30	40	47	50	60
55	900	Capacity	20.5	28.2	36.0	41.6	52.8	62.7	71.0	73.5	83.8
		Int. Cap.	19.0	25.9	33.0	38.0	46.3	62.7	71.0	73.5	83.8
		kW	4.0	4.2	4.4	4.5	4.7	5.0	5.2	5.3	5.5
	1200	Capacity		29.0	37.0	42.8	54.4	65.4	73.0	75.4	86.1
		Int. Cap.		26.7	34.0	39.1	47.7	65.4	73.0	75.4	86.1
		kW		4.1	4.2	4.3	4.5	4.8	4.9	4.9	5.1
	1500	Capacity		29.5	37.6	43.5	55.4	66.4	73.9	76.4	87.2
		Int. Cap.		27.1	34.5	39.7	48.5	66.4	73.9	76.4	87.2
		kW		4.0	4.1	4.2	4.4	4.6	4.7	4.7	4.9
70	900	Capacity	15.8	23.6	31.6	37.3	48.5	57.7	65.5	68.5	79.7
		Int. Cap.	14.6	21.7	29.0	34.0	42.5	57.7	65.5	68.5	79.7
		kW	4.5	4.7	4.9	5.0	5.3	5.5	5.7	5.8	6.1
	1200	Capacity	16.4	24.6	32.8	38.7	50.2	60.1	68.9	71.7	82.3
		Int. Cap.	15.1	22.6	30.1	35.3	44.0	60.1	68.9	71.7	82.3
		kW	4.4	4.6	4.8	4.9	5.1	5.2	5.5	5.5	5.7
	1500	Capacity	16.8	25.1	33.5	39.5	51.3	61.6	70.5	73.0	83.6
		Int. Cap.	15.5	23.1	30.8	36.1	44.9	61.6	70.5	73.0	83.6
		kW	4.4	4.6	4.7	4.8	4.9	5.1	5.3	5.3	5.5
80	900	Capacity	11.9	20.0	28.1	33.9	45.2	54.3	61.5	64.5	76.1
		Int. Cap.	11.0	18.4	25.8	30.9	39.6	54.3	61.5	64.5	76.1
		kW	4.8	5.0	5.3	5.4	5.7	5.9	6.1	6.2	6.5
	1200	Capacity	12.5	20.9	29.3	35.4	47.0	56.7	64.6	67.7	79.4
		Int. Cap.	11.5	19.2	26.9	32.3	41.2	56.7	64.6	67.7	79.4
		kW	4.8	5.0	5.1	5.3	5.5	5.6	5.8	5.9	6.1
	1500	Capacity	12.8	21.4	30.1	36.2	48.1	57.9	66.5	69.6	80.9
		Int. Cap.	11.8	19.7	27.6	33.0	42.1	57.9	66.5	69.6	80.9
		kW	4.8	4.9	5.1	5.2	5.3	5.5	5.6	5.7	5.9

▨ – Indicates operation not permissible

LEGEND

Capacity – Instantaneous Capacity (1000 Btuh) includes indoor fan motor heat @AHRI static conditions

Int. Cap. – Integrated Capacity is Instantaneous Capacity minus the effects of frost on the outdoor coil and the heat required to defrost

RH – Relative Humidity

db – Dry Bulb

Table 25 – HEATING CAPACITIES **7.5 TONS**

50HCQD08											
RETURN AIR (°F db)	CFM (STANDARD AIR)		TEMPERATURE AIR ENTERING OUTDOOR COIL (°F db AT 70% RH)								
			–10	0	10	17	30	40	47	50	60
55	2250	Capacity	24.3	33.6	43.4	50.6	66.3	78.0	87.4	90.4	102.6
		Int. Cap.	22.4	30.9	39.8	46.2	58.1	78.0	87.4	90.4	102.6
		kW	4.8	5.0	5.2	5.4	5.8	6.1	6.3	6.4	6.7
	3000	Capacity	24.7	34.2	44.3	51.8	67.8	80.2	89.6	92.5	104.6
		Int. Cap.	22.8	31.5	40.7	47.3	59.4	80.2	89.6	92.5	104.6
		kW	4.7	4.9	5.0	5.1	5.4	5.7	5.9	5.9	6.2
	3750	Capacity	24.9	34.6	44.9	52.6	68.7	81.3	90.4	93.1	104.3
		Int. Cap.	23.1	31.9	41.2	48.0	60.2	81.3	90.4	93.1	104.3
		kW	4.7	4.8	4.9	5.0	5.3	5.5	5.6	5.6	5.8
70	2250	Capacity	20.3	29.6	39.3	46.5	60.8	73.8	82.7	85.9	98.3
		Int. Cap.	18.7	27.2	36.1	42.4	53.3	73.8	82.7	85.9	98.3
		kW	5.5	5.7	5.9	6.1	6.5	6.9	7.2	7.3	7.7
	3000	Capacity	20.8	30.4	40.5	47.9	63.4	75.9	85.4	88.5	100.6
		Int. Cap.	19.3	28.0	37.2	43.6	55.6	75.9	85.4	88.5	100.6
		kW	5.4	5.6	5.8	5.9	6.2	6.5	6.7	6.7	7.0
	3750	Capacity	21.2	31.0	41.2	48.7	64.8	77.2	86.8	89.8	101.4
		Int. Cap.	19.6	28.5	37.8	44.4	56.7	77.2	86.8	89.8	101.4
		kW	5.4	5.5	5.6	5.7	6.0	6.2	6.4	6.4	6.6
80	2250	Capacity	16.8	26.2	36.0	43.2	57.2	70.2	79.5	82.8	95.2
		Int. Cap.	15.5	24.1	33.0	39.4	50.1	70.2	79.5	82.8	95.2
		kW	6.0	6.2	6.5	6.7	7.1	7.5	7.9	8.0	8.4
	3000	Capacity	17.4	27.1	37.2	44.6	59.3	73.0	82.1	85.4	97.7
		Int. Cap.	16.1	24.9	34.2	40.7	52.0	73.0	82.1	85.4	97.7
		kW	5.9	6.1	6.3	6.4	6.7	7.1	7.3	7.4	7.7
	3750	Capacity	17.7	27.6	38.0	45.5	60.6	74.3	83.7	87.0	98.8
		Int. Cap.	16.4	25.4	34.9	41.5	53.1	74.3	83.7	87.0	98.8
		kW	5.9	6.0	6.2	6.3	6.5	6.8	7.0	7.0	7.3

LEGEND

Capacity – Instantaneous Capacity (1000 Btuh) includes indoor fan motor heat @AHRI static conditions
Int. Cap. – Integrated Capacity is Instantaneous Capacity minus the effects of frost on the outdoor coil and the heat required to defrost
RH – Relative Humidity
dD – Dry Bulb

Table 26 – HEATING CAPACITIES 8.5 TONS

50HCQD09											
RETURN AIR (°F db)	CFM (STANDARD AIR)		TEMPERATURE AIR ENTERING OUTDOOR COIL (°F db AT 70% RH)								
			–10	0	10	17	30	40	47	50	60
55	2250	Capacity	35.1	37.7	49.0	57.4	74.4	87.8	98.9	102.6	118.3
		Int. Cap.	32.5	34.7	45.0	52.3	65.2	87.8	98.9	102.6	118.3
		kW	5.4	5.3	5.5	5.7	6.1	6.4	6.7	6.7	7.1
	3400	Capacity	32.6	39.1	50.8	59.4	76.8	90.8	102.1	105.7	121.3
		Int. Cap.	30.1	36.0	46.6	54.1	67.3	90.8	102.1	105.7	121.3
		kW	5.4	5.3	5.5	5.7	6.0	6.2	6.4	6.4	6.7
	4250	Capacity	34.4	42.6	54.4	63.3	80.9	95.1	106.1	109.6	125.0
		Int. Cap.	31.8	39.2	50.0	57.7	70.9	95.1	106.1	109.6	125.0
		kW	6.2	6.2	6.3	6.4	6.7	6.9	7.0	7.1	7.3
70	2250	Capacity	35.2	33.3	44.5	52.8	69.3	83.1	93.6	97.3	112.9
		Int. Cap.	32.6	30.6	40.9	48.1	60.7	83.1	93.6	97.3	112.9
		kW	6.3	6.0	6.3	6.5	6.9	7.3	7.6	7.7	8.1
	3400	Capacity	35.6	34.9	46.5	55.0	72.5	86.1	97.1	100.8	116.2
		Int. Cap.	32.9	32.1	42.7	50.1	63.5	86.1	97.1	100.8	116.2
		kW	6.3	6.1	6.3	6.5	6.8	7.1	7.3	7.3	7.6
	4250	Capacity	38.2	38.6	50.3	59.0	76.7	90.5	101.6	105.2	120.2
		Int. Cap.	35.3	35.5	46.2	53.7	67.2	90.5	101.6	105.2	120.2
		kW	7.2	6.9	7.1	7.2	7.5	7.7	7.9	7.9	8.2
80	2250	Capacity	34.6	29.6	40.9	49.1	65.4	79.8	89.9	93.8	109.1
		Int. Cap.	32.0	27.2	37.5	44.8	57.3	79.8	89.9	93.8	109.1
		kW	7.1	6.6	6.9	7.1	7.5	8.0	8.3	8.4	8.8
	3400	Capacity	35.2	31.2	42.8	51.4	68.2	82.7	93.4	97.2	112.5
		Int. Cap.	32.5	28.7	39.3	46.8	59.8	82.7	93.4	97.2	112.5
		kW	7.1	6.7	6.9	7.1	7.4	7.7	8.0	8.1	8.4
	4250	Capacity	38.2	34.9	46.7	55.4	72.7	87.1	98.2	101.8	116.8
		Int. Cap.	35.3	32.1	42.9	50.5	63.7	87.1	98.2	101.8	116.8
		kW	7.9	7.5	7.7	7.8	8.1	8.4	8.6	8.6	8.9

LEGEND

Capacity – Instantaneous Capacity (1000 Btuh) includes indoor fan motor heat @AHRI static conditions
Int. Cap. – Integrated Capacity is Instantaneous Capacity minus the effects of frost on the outdoor coil and the heat required to defrost
RH – Relative Humidity
db – Dry Bulb

Table 27 – HEATING CAPACITIES **10 TONS**

50HCQD12											
RETURN AIR (°F db)	CFM (STANDARD AIR)		TEMPERATURE AIR ENTERING OUTDOOR COIL (°F db AT 70% RH)								
			–10	0	10	17	30	40	47	50	60
55	3000	Capacity	39.8	50.9	62.9	72.7	91.4	106.1	117.2	121.0	136.2
		Int. Cap.	36.8	46.8	57.8	66.3	80.1	106.1	117.2	121.0	136.2
		kW	6.23	6.55	6.87	7.15	7.71	8.20	8.62	8.76	9.39
	4000	Capacity	42.1	53.5	66.0	75.9	94.8	109.6	120.7	124.3	139.4
		Int. Cap.	39.0	49.2	60.6	69.2	83.0	109.6	120.7	124.3	139.4
		kW	6.50	6.75	7.01	7.22	7.65	8.03	8.36	8.47	8.96
	5000	Capacity	44.5	56.0	69.1	79.1	97.5	112.3	123.0	126.3	140.9
		Int. Cap.	41.2	51.5	63.4	72.1	85.4	112.3	123.0	126.3	140.9
		kW	6.93	7.15	7.38	7.56	7.91	8.25	8.51	8.60	9.01
70	3000	Capacity	34.6	45.8	57.9	66.9	86.4	101.6	112.2	116.3	131.2
		Int. Cap.	32.0	42.1	53.1	61.0	75.7	101.6	112.2	116.3	131.2
		kW	7.04	7.42	7.81	8.11	8.82	9.41	9.86	10.06	10.75
	4000	Capacity	37.0	48.5	60.9	70.4	90.4	105.1	116.1	120.0	134.8
		Int. Cap.	34.2	44.6	55.9	64.2	79.3	105.1	116.1	120.0	134.8
		kW	7.31	7.62	7.93	8.17	8.73	9.16	9.53	9.66	10.21
	5000	Capacity	39.4	51.1	63.7	73.6	93.5	108.0	118.9	122.5	137.0
		Int. Cap.	36.4	47.0	58.4	67.1	81.9	108.0	118.9	122.5	137.0
		kW	7.74	8.01	8.28	8.48	8.96	9.33	9.63	9.74	10.21
80	3000	Capacity	30.4	41.9	54.1	63.1	82.6	98.5	108.9	113.1	127.9
		Int. Cap.	28.1	38.6	49.6	57.6	72.3	98.5	108.9	113.1	127.9
		kW	7.65	8.09	8.53	8.86	9.64	10.34	10.83	11.05	11.80
	4000	Capacity	32.8	44.6	57.1	66.5	86.5	102.1	112.7	116.9	131.5
		Int. Cap.	30.4	41.1	52.4	60.6	75.8	102.1	112.7	116.9	131.5
		kW	7.92	8.28	8.64	8.90	9.51	10.03	10.43	10.58	11.17
	5000	Capacity	35.2	47.2	59.9	69.4	89.8	105.1	115.8	119.6	134.0
		Int. Cap.	32.6	43.5	55.0	63.3	78.7	105.1	115.8	119.6	134.0
		kW	8.36	8.68	8.98	9.19	9.72	10.15	10.49	10.61	11.12

LEGEND

Capacity – Instantaneous Capacity (1000 Btuh) includes indoor fan motor heat @AHRI static conditions

Int. Cap. – Integrated Capacity is Instantaneous Capacity minus the effects of frost on the outdoor coil and the heat required to defrost

RH – Relative Humidity

db – Dry Bulb

Table 28 – STATIC PRESSURE ADDERS (Factory Options and/or Accessories)

Economizer

3 – 5 TONS											
CFM (in. wg)	**600**	**800**	**1000**	**1250**	**1500**	**1750**	**2000**	**2250**	**2500**	**2750**	**3000**
Vertical Economizer	0.01	0.02	0.04	0.05	0.07	0.09	0.12	0.15	0.18	0.22	0.26
Horizontal Economizer	0.02	0.03	0.04	0.06	0.08	0.10	0.13	0.15	0.18	0.23	0.28

6 – 10 TONS																
CFM (in. wg)	**2250**	**2500**	**2750**	**3000**	**3250**	**3500**	**3750**	**4000**	**4250**	**4500**	**4750**	**5000**	**5250**	**5500**	**5750**	**6000**
Vertical Economizer	0.06	0.08	0.09	0.12	0.13	0.15	0.17	0.20	0.22	0.25	0.29	0.33	0.36	0.40	0.44	0.48
Horizontal Economizer	0.08	0.10	0.13	0.15	0.18	0.21	0.25	0.28	0.30	0.34	0.39	0.43	0.47	0.51	0.56	0.60

Electric Heaters

3 – 5 TONS										
CFM (in. wg)	**600**	**900**	**1200**	**1400**	**1600**	**1800**	**2000**	**2200**	**2400**	**2600**
1 Electric Heater Module	0.03	0.05	0.07	0.09	0.09	0.10	0.11	0.11	0.12	0.13
2 Electric Heater Modules	0.13	0.15	0.16	0.16	0.16	0.17	0.17	0.17	0.18	0.18

6 – 10 TONS																
CFM (in. wg)	**2250**	**2500**	**2750**	**3000**	**3250**	**3500**	**3750**	**4000**	**4250**	**4500**	**4750**	**5000**	**5250**	**5500**	**5750**	**6000**
1 Electric Heater Module	0.03	0.04	0.04	0.05	0.06	0.07	0.08	0.09	0.10	0.11	0.12	0.13	0.14	0.15	0.16	0.18
2 Electric Heater Modules	0.04	0.05	0.05	0.06	0.07	0.08	0.09	0.10	0.11	0.12	0.13	0.15	0.16	0.17	0.19	0.20

General fan performance notes:

1. Interpolation is permissible. Do not extrapolate.
2. External static pressure is the static pressure difference between the return duct and the supply duct plus the static pressure caused by any FIOPs or accessories.
3. Tabular data accounts for pressure loss due to clean filters, unit casing, and wet coils. Factory options and accessories may add static pressure losses, as shown in the above tables. Selection software is available, through your salesperson, to help you select the best motor/drive combination for your application.
4. The Fan Performance tables offer motor/drive recommendations. In cases when two motor/drive combinations would work, Carrier recommended the lower horsepower option.
5. For information on the electrical properties of Carrier motors, please see the Electrical information section of this book.
6. For more information on the performance limits of Carrier motors, see the application data section of this book.

FAN PERFORMANCE

Table 29 – 50HCQA04
3 TON HORIZONTAL UNIT DIRECT DRIVE

SPEED (TORQUE) TAP	CFM	ESP	BHP
1	900	0.57	0.25
	975	0.47	0.24
	1050	0.37	0.22
	1125	0.27	0.21
	1200	0.18	0.20
	1275	0.09	0.20
	1350	–	–
	1425	–	–
	1500	–	–
2	900	0.73	0.30
	975	0.62	0.29
	1050	0.51	0.28
	1125	0.41	0.27
	1200	0.30	0.25
	1275	0.19	0.24
	1350	0.08	0.22
	1425	–	–
	1500	–	–
3	900	1.04	0.41
	975	0.93	0.40
	1050	0.82	0.39
	1125	0.70	0.38
	1200	0.58	0.36
	1275	0.46	0.35
	1350	0.34	0.33
	1425	0.23	0.31
	1500	0.12	0.30
4	900	1.26	0.49
	975	1.18	0.50
	1050	1.09	0.50
	1125	0.99	0.50
	1200	0.88	0.49
	1275	0.76	0.47
	1350	0.63	0.46
	1425	0.50	0.44
	1500	0.37	0.42
5	900	1.35	0.52
	975	1.30	0.54
	1050	1.26	0.57
	1125	1.21	0.59
	1200	1.16	0.62
	1275	1.12	0.64
	1350	1.07	0.67
	1425	1.02	0.70
	1500	0.97	0.73

Table 30 – 50HCQA04
3 TON VERTICAL UNIT DIRECT DRIVE

SPEED (TORQUE) TAP	CFM	ESP	BHP
1	900	0.44	0.19
	975	0.34	0.18
	1050	0.24	0.17
	1125	0.15	0.16
	1200	0.07	0.16
	1275	–	–
	1350	–	–
	1425	–	–
	1500	–	–
2	900	0.60	0.24
	975	0.49	0.23
	1050	0.38	0.22
	1125	0.28	0.21
	1200	0.18	0.20
	1275	0.09	0.19
	1350	–	–
	1425	–	–
	1500	–	–
3	900	0.93	0.36
	975	0.81	0.35
	1050	0.70	0.34
	1125	0.58	0.33
	1200	0.47	0.31
	1275	0.36	0.30
	1350	0.25	0.29
	1425	0.14	0.27
	1500	–	–
4	900	1.15	0.44
	975	1.07	0.45
	1050	0.97	0.46
	1125	0.86	0.46
	1200	0.74	0.43
	1275	0.61	0.41
	1350	0.48	0.40
	1425	0.35	0.39
	1500	0.23	0.37
5	900	1.24	0.51
	975	1.19	0.52
	1050	1.24	0.54
	1125	1.24	0.57
	1200	1.03	0.59
	1275	0.98	0.61
	1350	0.93	0.64
	1425	0.88	0.67
	1500	0.82	0.69

FAN PERFORMANCE (cont.)

Table 31 – 50HCQA05
4 TON HORIZONTAL UNIT DIRECT DRIVE

SPEED (TORQUE) TAP	CFM	ESP	BHP
1	1200	0.93	0.48
	1300	0.80	0.46
	1400	0.66	0.44
	1500	0.51	0.41
	1600	0.36	0.39
	1700	0.22	0.36
	1800	0.08	0.33
	1900	–	–
	2000	–	–
2	1200	1.04	0.53
	1300	0.91	0.51
	1400	0.76	0.48
	1500	0.61	0.46
	1600	0.45	0.43
	1700	0.30	0.40
	1800	0.16	0.38
	1900	0.04	0.35
	2000	–	–
3	1200	1.18	0.58
	1300	1.09	0.59
	1400	0.98	0.60
	1500	0.86	0.60
	1600	0.72	0.57
	1700	0.57	0.54
	1800	0.42	0.51
	1900	0.28	0.48
	2000	0.15	0.45
4	1200	1.24	0.60
	1300	1.18	0.63
	1400	1.12	0.66
	1500	1.04	0.71
	1600	0.95	0.70
	1700	0.85	0.71
	1800	0.73	0.71
	1900	0.60	0.69
	2000	0.45	0.65
5	1200	1.25	0.61
	1300	1.20	0.65
	1400	1.12	0.68
	1500	1.04	0.68
	1600	1.05	0.76
	1700	1.01	0.76
	1800	0.96	0.84
	1900	0.91	0.89
	2000	0.87	0.93

Table 32 – 50HCQA05
4 TON VERTICAL UNIT DIRECT DRIVE

SPEED (TORQUE) TAP	CFM	ESP	BHP
1	1200	0.87	0.43
	1300	0.73	0.41
	1400	0.59	0.39
	1500	0.43	0.37
	1600	0.27	0.34
	1700	0.12	0.33
	1800	–	–
	1900	–	–
	2000	–	–
2	1200	0.96	0.48
	1300	0.84	0.46
	1400	0.69	0.44
	1500	0.53	0.41
	1600	0.37	0.39
	1700	0.21	0.36
	1800	0.06	0.34
	1900	–	–
	2000	–	–
3	1200	1.13	0.53
	1300	1.06	0.53
	1400	0.98	0.54
	1500	0.88	0.56
	1600	0.76	0.54
	1700	0.62	0.52
	1800	0.47	0.50
	1900	0.31	0.47
	2000	0.15	0.45
4	1200	1.16	0.57
	1300	1.12	0.59
	1400	1.07	0.62
	1500	1.00	0.67
	1600	0.91	0.66
	1700	0.80	0.67
	1800	0.67	0.67
	1900	0.52	0.63
	2000	0.35	0.61
5	1200	1.16	0.59
	1300	1.11	0.63
	1400	1.01	0.67
	1500	0.91	0.67
	1600	0.96	0.75
	1700	0.91	0.75
	1800	0.86	0.83
	1900	0.80	0.87
	2000	0.74	0.91

FAN PERFORMANCE (cont.)

Table 33 – 50HCQA06
5 TON HORIZONTAL UNIT DIRECT DRIVE

SPEED (TORQUE) TAP	CFM	ESP	BHP
1	1500	0.37	0.35
	1625	0.22	0.33
	1750	0.08	0.31
	1875	–	–
	2000	–	–
	2125	–	–
	2250	–	–
	2375	–	–
	2500	–	–
2	1500	0.54	0.44
	1625	0.37	0.41
	1750	0.20	0.38
	1875	0.04	0.35
	2000	–	–
	2125	–	–
	2250	–	–
	2375	–	–
	2500	–	–
3	1500	1.28	0.83
	1625	1.10	0.81
	1750	0.90	0.78
	1875	0.68	0.74
	2000	0.47	0.70
	2125	0.27	0.66
	2250	0.10	0.62
	2375	–	–
	2500	–	–
4	1500	1.46	0.94
	1625	1.32	0.92
	1750	1.16	0.96
	1875	0.96	0.95
	2000	0.76	0.91
	2125	0.54	0.86
	2250	0.33	0.82
	2375	0.14	0.78
	2500	0.00	0.72
5	1500	1.52	0.97
	1625	1.42	1.01
	1750	1.16	1.05
	1875	0.96	1.09
	2000	1.00	1.09
	2125	0.82	1.06
	2250	0.62	1.02
	2375	0.40	0.98
	2500	0.16	0.93

Table 34 – 50HCQA06
5 TON VERTICAL UNIT DIRECT DRIVE

SPEED (TORQUE) TAP	CFM	ESP	BHP
1	1500	0.27	0.32
	1625	0.13	0.30
	1750	–	–
	1875	–	–
	2000	–	–
	2125	–	–
	2250	–	–
	2375	–	–
	2500	–	–
2	1500	0.42	0.40
	1625	0.25	0.37
	1750	0.08	0.34
	1875	–	–
	2000	–	–
	2125	–	–
	2250	–	–
	2375	–	–
	2500	–	–
3	1500	1.11	0.79
	1625	0.91	0.76
	1750	0.70	0.74
	1875	0.50	0.70
	2000	0.30	0.67
	2125	0.12	0.63
	2250	–	–
	2375	–	–
	2500	–	–
4	1500	1.29	0.90
	1625	1.13	0.88
	1750	0.95	0.91
	1875	0.74	0.88
	2000	0.52	0.84
	2125	0.30	0.80
	2250	0.11	0.77
	2375	–	–
	2500	–	–
5	1500	1.36	0.94
	1625	1.24	0.99
	1750	0.95	1.02
	1875	0.74	1.05
	2000	0.74	1.03
	2125	0.53	0.99
	2250	0.31	0.94
	2375	0.08	0.90
	2500	–0.14	0.86

FAN PERFORMANCE (cont.)

Table 35 – 50HCQA04 **3 TON HORIZONTAL SUPPLY**

CFM	AVAILABLE EXTERNAL STATIC PRESSURE (IN. WG)									
	0.2		0.4		0.6		0.8		1.0	
	RPM	BHP	RPM	BHP	RPM	BHP	RPM	BHP	RPM	BHP
900	574	0.13	707	0.23	817	0.34	913	0.47	999	0.61
975	597	0.15	727	0.25	835	0.37	929	0.50	1015	0.64
1050	621	0.18	747	0.28	853	0.40	946	0.53	1030	0.68
1125	646	0.20	768	0.31	872	0.43	964	0.57	1047	0.72
1200	671	0.23	790	0.34	892	0.47	982	0.61	1064	0.76
1275	696	0.26	812	0.38	912	0.51	1001	0.65	1082	0.81
1350	723	0.30	835	0.42	933	0.55	1020	0.70	1100	0.86
1425	749	0.34	859	0.46	955	0.60	1040	0.75	1119	0.91
1500	776	0.38	883	0.51	977	0.65	1061	0.80	1138	0.97

CFM	AVAILABLE EXTERNAL STATIC PRESSURE (IN. WG)									
	1.2		1.4		1.6		1.8		2.0	
	RPM	BHP	RPM	BHP	RPM	BHP	RPM	BHP	RPM	BHP
900	1078	0.77	1151	0.93	1220	1.11	1284	1.30	1346	1.49
975	1093	0.80	1165	0.97	1233	1.15	1297	1.33	1358	1.53
1050	1108	0.84	1180	1.01	1247	1.19	1311	1.38	1371	1.58
1125	1123	0.88	1195	1.05	1261	1.23	1325	1.42	1385	1.62
1200	1140	0.92	1210	1.10	1276	1.28	1339	1.47	1399	1.68
1275	1157	0.97	1226	1.15	1292	1.33	1354	1.53	1414	1.73
1350	1174	1.02	1243	1.20	1308	1.39	1370	1.59	1429	1.80
1425	1192	1.08	1260	1.26	1325	1.45	1386	1.65	1444	1.86
1500	1210	1.14	1278	1.33	1342	1.52	1403	1.72	1461	1.93

Med Static Motor and Drive – 819–1251 RPM, Max BHP 1.5
High Static Motor and Drive – 1035–1466 RPM, Max BHP 2.0

Table 36 – 50HCQA04 **3 TON VERTICAL SUPPLY**

CFM	AVAILABLE EXTERNAL STATIC PRESSURE (IN. WG)									
	0.2		0.4		0.6		0.8		1.0	
	RPM	BHP	RPM	BHP	RPM	BHP	RPM	BHP	RPM	BHP
900	594	0.15	740	0.25	867	0.37	981	0.52	1084	0.68
975	618	0.17	758	0.28	881	0.40	991	0.55	1092	0.71
1050	642	0.19	777	0.30	896	0.43	1003	0.58	1102	0.75
1125	668	0.22	797	0.34	912	0.47	1017	0.62	1113	0.79
1200	695	0.25	818	0.37	930	0.51	1032	0.66	1126	0.83
1275	722	0.29	841	0.41	949	0.55	1048	0.71	1140	0.88
1350	750	0.33	864	0.46	968	0.60	1065	0.76	1155	0.93
1425	778	0.37	888	0.50	989	0.65	1083	0.81	1171	0.99
1500	807	0.42	913	0.56	1011	0.71	1103	0.87	1188	1.05

CFM	AVAILABLE EXTERNAL STATIC PRESSURE (IN. WG)									
	1.2		1.4		1.6		1.8		2.0	
	RPM	BHP	RPM	BHP	RPM	BHP	RPM	BHP	RPM	BHP
900	1180	0.86	1269	1.05	1354	1.25	1434	1.47	**1511**	**1.70**
975	1186	0.89	1275	1.08	1358	1.29	1437	1.51	**1513**	**1.74**
1050	1194	0.92	1281	1.12	1363	1.32	1441	1.54	**1516**	**1.78**
1125	1204	0.97	1289	1.16	1370	1.37	1447	1.59	**1520**	**1.82**
1200	1215	1.01	1298	1.21	1378	1.42	1454	1.64	**1526**	**1.87**
1275	1227	1.06	1309	1.26	1387	1.47	1462	1.69	**1533**	**1.92**
1350	1240	1.12	1321	1.32	1397	1.53	**1471**	**1.75**	**1541**	**1.99**
1425	1254	1.18	1333	1.38	1409	1.59	**1481**	**1.82**	–	–
1500	1270	1.24	1347	1.45	1421	1.66	**1492**	**1.89**	–	–

Boldface – Field–supplied Drive
– Outside operating range

Med Static Motor and Drive – 819–1251 RPM, Max BHP 1.5
High Static Motor and Drive – 1035–1466 RPM, Max BHP 2.0

FAN PERFORMANCE (cont.)

Table 37 – 50HCQA05 **4 TON HORIZONTAL SUPPLY**

CFM	Available External Static Pressure (in. wg)									
	0.2		0.4		0.6		0.8		1.0	
	RPM	BHP	RPM	BHP	RPM	BHP	RPM	BHP	RPM	BHP
1200	630	0.20	755	0.31	859	0.43	949	0.56	1030	0.70
1300	659	0.24	781	0.36	883	0.48	972	0.61	1052	0.76
1400	689	0.28	808	0.40	908	0.53	995	0.67	1075	0.82
1500	720	0.33	836	0.46	933	0.59	1020	0.74	1098	0.89
1600	752	0.38	864	0.52	960	0.66	1044	0.81	1121	0.97
1700	784	0.44	893	0.58	986	0.73	1070	0.89	1146	1.05
1800	816	0.50	922	0.65	1014	0.81	1096	0.97	1171	1.14
1900	849	0.58	952	0.73	1042	0.90	1122	1.07	1196	1.24
2000	882	0.66	982	0.82	1070	0.99	1149	1.17	1222	1.35

CFM	AVAILABLE EXTERNAL STATIC PRESSURE (IN. WG)									
	1.2		1.4		1.6		1.8		2.0	
	RPM	BHP	RPM	BHP	RPM	BHP	RPM	BHP	RPM	BHP
1200	1104	0.84	1173	0.99	1237	1.15	1298	1.32	1356	1.49
1300	1125	0.91	1194	1.06	1258	1.23	1318	1.40	1375	1.58
1400	1147	0.98	1215	1.14	1278	1.31	1338	1.48	1395	1.67
1500	1170	1.05	1237	1.22	1299	1.39	1359	1.57	1416	1.76
1600	1193	1.13	1259	1.31	1321	1.49	1380	1.67	1437	1.86
1700	1216	1.22	1282	1.40	1344	1.59	1402	1.78	1458	1.97
1800	1240	1.32	1305	1.50	1366	1.69	1424	1.89	*1480*	*2.09*
1900	1265	1.43	1329	1.61	1390	1.81	*1447*	*2.01*	*1502*	*2.22*
2000	1290	1.54	1353	1.73	1413	1.93	*1470*	*2.14*	*1525*	*2.35*

Italics – Field–supplied motor and drive required

Med Static Motor and Drive – 920–1303 RPM, Max BHP 1.5
High Static Motor and Drive – 1035–1466 RPM, Max BHP 2.0

Table 38 – 50HCQA05 **4 TON VERTICAL SUPPLY**

CFM	AVAILABLE EXTERNAL STATIC PRESSURE (IN. WG)									
	0.2		0.4		0.6		0.8		1.0	
	RPM	BHP	RPM	BHP	RPM	BHP	RPM	BHP	RPM	BHP
1200	682	0.25	800	0.36	897	0.48	982	0.61	1058	0.75
1300	717	0.29	832	0.42	928	0.55	1011	0.68	1086	0.82
1400	753	0.34	865	0.48	958	0.61	1041	0.76	1115	0.91
1500	789	0.40	898	0.54	990	0.69	1071	0.84	1144	1.00
1600	826	0.47	932	0.62	1022	0.77	1102	0.93	1174	1.09
1700	863	0.54	966	0.70	1055	0.86	1133	1.03	1205	1.20
1800	901	0.62	1001	0.79	1088	0.96	1165	1.13	1235	1.31
1900	939	0.71	1037	0.89	1121	1.07	1197	1.25	1267	1.44
2000	978	0.81	1073	0.99	1156	1.18	1230	1.37	1299	1.57

CFM	AVAILABLE EXTERNAL STATIC PRESSURE (IN. WG)									
	1.2		1.4		1.6		1.8		2.0	
	RPM	BHP	RPM	BHP	RPM	BHP	RPM	BHP	RPM	BHP
1200	1128	0.89	1192	1.03	1252	1.18	1309	1.34	1363	1.50
1300	1155	0.97	1219	1.12	1279	1.28	1336	1.44	1389	1.61
1400	1183	1.06	1247	1.22	1306	1.38	1362	1.55	1416	1.72
1500	1212	1.16	1275	1.32	1334	1.49	1389	1.67	1443	1.85
1600	1241	1.26	1303	1.43	1362	1.61	1417	1.79	1470	1.98
1700	1271	1.37	1332	1.55	1390	1.74	1445	1.93	*1498*	*2.12*
1800	1301	1.50	1362	1.68	1419	1.87	*1474*	*2.07*	*1526*	*2.27*
1900	1331	1.63	1392	1.82	*1449*	*2.02*	*1503*	*2.22*	–	–
2000	1362	1.77	1422	1.97	*1478*	*2.18*	*1532*	*2.38*	–	–

Italics – Field–supplied motor and drive required
– Outside operating range

Med Static Motor and Drive – 920–1303 RPM, Max BHP 1.5
High Static Motor and Drive – 1035–1466 RPM, Max BHP 2.0

Table 39 – 50HCQA06 **5 TON HORIZONTAL SUPPLY**

CFM	AVAILABLE EXTERNAL STATIC PRESSURE (IN. WG)									
	0.2		0.4		0.6		0.8		1.0	
	RPM	BHP	RPM	BHP	RPM	BHP	RPM	BHP	RPM	BHP
1500	725	0.33	840	0.46	937	0.60	1023	0.75	1101	0.90
1625	765	0.40	876	0.54	970	0.68	1054	0.84	1131	1.00
1750	806	0.48	912	0.63	1004	0.78	1087	0.94	1162	1.11
1875	847	0.57	950	0.72	1039	0.88	1120	1.05	1194	1.23
2000	889	0.66	988	0.83	1075	1.00	1154	1.18	1226	1.36
2125	931	0.78	1027	0.95	1112	1.13	1189	1.31	1260	1.50
2250	974	0.90	1067	1.08	1149	1.27	1224	1.46	1294	1.66
2375	1018	1.03	1107	1.23	1187	1.43	1261	1.63	1329	1.84
2500	1061	1.19	1148	1.39	1226	1.59	1297	1.81	1364	2.02

CFM	AVAILABLE EXTERNAL STATIC PRESSURE (IN. WG)									
	1.2		1.4		1.6		1.8		2.0	
	RPM	BHP	RPM	BHP	RPM	BHP	RPM	BHP	RPM	BHP
1500	1172	1.06	1239	1.23	1302	1.40	1361	1.58	1418	1.77
1625	1201	1.16	1267	1.34	1329	1.52	1388	1.71	1444	1.90
1750	1231	1.28	1296	1.46	1358	1.65	1416	1.84	1472	2.04
1875	1262	1.41	1326	1.60	1387	1.79	1445	1.99	1499	2.20
2000	1294	1.55	1357	1.74	1417	1.95	1474	2.15	1528	2.36
2125	1326	1.70	1388	1.90	1447	2.11	1504	2.33	1557	2.55
2250	1359	1.87	1420	2.08	1479	2.29	1534	2.51	1587	2.74
2375	1393	2.05	1453	2.27	1511	2.49	1566	2.72	–	–
2500	1427	2.24	1487	2.47	1543	2.70	1597	2.94	–	–

Med Static Motor and Drive – 1066–1380 RPM, Max BHP 2.0
High Static Motor and Drive – 1208–1639 RPM, Max BHP 2.9

– Outside operating range

Table 40 – 50HCQA06 **5 TON VERTICAL SUPPLY**

CFM	AVAILABLE EXTERNAL STATIC PRESSURE (IN. WG)									
	0.2		0.4		0.6		0.8		1.0	
	RPM	BHP	RPM	BHP	RPM	BHP	RPM	BHP	RPM	BHP
1500	794	0.41	902	0.55	993	0.69	1074	0.85	1147	1.00
1625	840	0.49	945	0.64	1034	0.80	1113	0.96	1185	1.13
1750	888	0.59	988	0.75	1075	0.92	1153	1.09	1223	1.26
1875	936	0.70	1033	0.87	1117	1.05	1193	1.23	1263	1.41
2000	984	0.82	1078	1.00	1160	1.19	1235	1.39	1303	1.58
2125	1033	0.96	1124	1.15	1204	1.35	1277	1.56	1343	1.76
2250	1083	1.11	1170	1.32	1248	1.53	1319	1.74	1385	1.96
2375	1133	1.28	1217	1.50	1293	1.72	1363	1.95	1427	2.17
2500	1183	1.47	1265	1.70	1339	1.93	1406	2.17	1470	2.41

CFM	AVAILABLE EXTERNAL STATIC PRESSURE (IN. WG)									
	1.2		1.4		1.6		1.8		2.0	
	RPM	BHP	RPM	BHP	RPM	BHP	RPM	BHP	RPM	BHP
1500	1214	1.16	1277	1.33	1336	1.50	1392	1.67	1445	1.85
1625	1251	1.30	1313	1.47	1371	1.65	1427	1.83	1479	2.02
1750	1289	1.44	1350	1.63	1407	1.81	1462	2.01	1514	2.20
1875	1327	1.60	1387	1.80	1444	1.99	1498	2.19	1550	2.40
2000	1366	1.78	1426	1.98	1482	2.19	1535	2.40	1586	2.61
2125	1406	1.97	1464	2.18	1520	2.40	1573	2.62	1623	2.84
2250	1446	2.18	1504	2.40	1559	2.62	1611	2.85	–	–
2375	1487	2.40	1544	2.63	1598	2.87	–	–	–	–
2500	1529	2.64	1585	2.89	–	–	–	–	–	–

Med Static Motor and Drive – 1066–1380 RPM, Max BHP 2.0
High Static Motor and Drive – 1208–1639 RPM, Max BHP 2.9

– Outside operating range

Table 41 – 50HCQA07 **6 TON HORIZONTAL SUPPLY**

CFM	AVAILABLE EXTERNAL STATIC PRESSURE (IN. WG)									
	0.2		0.4		0.6		0.8		1.0	
	RPM	BHP	RPM	BHP	RPM	BHP	RPM	BHP	RPM	BHP
1800	415	0.28	510	0.46	588	0.65	655	0.85	715	1.08
1950	431	0.32	525	0.51	601	0.71	668	0.93	727	1.16
2100	448	0.38	540	0.57	615	0.78	681	1.01	740	1.25
2250	465	0.43	555	0.64	629	0.86	694	1.10	753	1.34
2400	483	0.49	571	0.71	644	0.94	708	1.19	766	1.45
2550	501	0.56	587	0.79	659	1.04	722	1.29	779	1.56
2700	519	0.64	603	0.88	674	1.14	737	1.40	793	1.68
2850	538	0.72	620	0.98	689	1.24	751	1.52	807	1.80
3000	557	0.82	637	1.08	705	1.36	766	1.64	822	1.94

CFM	AVAILABLE EXTERNAL STATIC PRESSURE (IN. WG)									
	1.2		1.4		1.6		1.8		2.0	
	RPM	BHP	RPM	BHP	RPM	BHP	RPM	BHP	RPM	BHP
1800	770	1.31	821	1.56	868	1.82	913	2.09	955	2.36
1950	782	1.40	832	1.66	879	1.92	924	2.20	966	2.49
2100	794	1.50	844	1.76	891	2.03	935	2.32	977	2.61
2250	806	1.60	856	1.87	903	2.15	947	2.45	988	2.75
2400	819	1.71	868	1.99	915	2.28	958	2.58	1000	2.89
2550	832	1.83	881	2.12	927	2.42	971	2.73	1012	3.05
2700	845	1.96	894	2.26	940	2.57	983	2.88	1024	3.21
2850	859	2.10	907	2.41	953	2.72	995	3.05	1036	3.38
3000	873	2.24	921	2.56	966	2.89	1008	3.22	1049	3.56

Std Static Motor and Drive – 489–747 RPM, Max BHP 1.2
Med Static Motor and Drive – 733–949 RPM, Max BHP 2.9
High Static Motor and Drive – 909–1102 RPM, Max BHP 4.0

Table 42 – 50HCQA07 **6 TON VERTICAL SUPPLY**

CFM	AVAILABLE EXTERNAL STATIC PRESSURE (IN. WG)									
	0.2		0.4		0.6		0.8		1.0	
	RPM	BHP	RPM	BHP	RPM	BHP	RPM	BHP	RPM	BHP
1800	446	0.33	534	0.50	609	0.70	676	0.91	736	1.14
1950	467	0.39	552	0.57	625	0.77	690	0.99	750	1.23
2100	489	0.45	571	0.64	642	0.86	706	1.08	764	1.33
2250	511	0.53	591	0.73	660	0.95	722	1.19	779	1.44
2400	534	0.61	611	0.82	678	1.05	739	1.30	795	1.56
2550	558	0.71	631	0.93	697	1.17	756	1.42	811	1.69
2700	581	0.81	652	1.04	716	1.29	774	1.55	828	1.83
2850	605	0.93	674	1.17	736	1.43	792	1.70	845	1.98
3000	630	1.06	696	1.31	756	1.58	811	1.86	863	2.15

CFM	AVAILABLE EXTERNAL STATIC PRESSURE (IN. WG)									
	1.2		1.4		1.6		1.8		2.0	
	RPM	BHP	RPM	BHP	RPM	BHP	RPM	BHP	RPM	BHP
1800	791	1.39	843	1.65	892	1.93	938	2.22	981	2.53
1950	804	1.49	855	1.76	903	2.04	949	2.34	992	2.65
2100	818	1.59	868	1.87	915	2.16	961	2.46	1003	2.78
2250	832	1.71	882	1.99	928	2.29	973	2.59	1015	2.92
2400	847	1.83	896	2.12	942	2.43	986	2.74	1028	3.07
2550	862	1.97	910	2.27	956	2.58	999	2.90	1041	3.23
2700	878	2.12	926	2.42	971	2.74	1013	3.07	1055	3.41
2850	895	2.28	941	2.59	986	2.92	1028	3.25	1069	3.60
3000	912	2.46	958	2.78	1001	3.11	1043	3.45	1083	3.80

Std Static Motor and Drive – 489–747 RPM, Max BHP 1.2
Med Static Motor and Drive – 733–949 RPM, Max BHP 2.9
High Static Motor and Drive – 909–1102 RPM, Max BHP 4.0

Table 43 – 50HCQD08 **7.5 TON HORIZONTAL SUPPLY**

CFM	AVAILABLE EXTERNAL STATIC PRESSURE (IN. WG)									
	0.2		0.4		0.6		0.8		1.0	
	RPM	BHP	RPM	BHP	RPM	BHP	RPM	BHP	RPM	BHP
2250	433	0.29	518	0.41	596	0.54	667	0.67	733	0.81
2438	454	0.35	535	0.48	609	0.61	677	0.75	741	0.90
2625	477	0.42	553	0.55	624	0.69	689	0.84	751	1.00
2813	500	0.49	572	0.64	640	0.78	703	0.94	763	1.10
3000	523	0.58	592	0.73	657	0.88	718	1.05	775	1.22
3188	547	0.68	613	0.83	675	1.00	733	1.17	789	1.34
3375	571	0.78	634	0.95	694	1.12	750	1.30	804	1.48
3563	596	0.90	656	1.07	713	1.25	768	1.44	820	1.63
3750	621	1.03	679	1.21	734	1.40	786	1.59	837	1.79

CFM	AVAILABLE EXTERNAL STATIC PRESSURE (IN. WG)									
	1.2		1.4		1.6		1.8		2.0	
	RPM	BHP	RPM	BHP	RPM	BHP	RPM	BHP	RPM	BHP
2250	795	0.96	854	1.11	910	1.27	963	1.43	1014	1.60
2438	802	1.05	859	1.21	913	1.38	966	1.55	1016	1.72
2625	810	1.16	865	1.32	919	1.49	970	1.67	1019	1.85
2813	819	1.27	874	1.44	925	1.62	975	1.80	1023	1.99
3000	830	1.39	883	1.57	934	1.76	982	1.95	1029	2.14
3188	843	1.53	894	1.71	943	1.90	990	2.10	1036	2.30
3375	856	1.67	905	1.86	953	2.06	1000	2.27	1045	2.48
3563	870	1.83	918	2.03	965	2.23	1010	2.44	1054	2.66
3750	885	1.99	932	2.20	978	2.42	1022	2.64	1065	2.86

Std Static Motor and Drive – 518–733 RPM, Max BHP 1.2
Med Static Motor and Drive – 690–936 RPM, Max BHP 1.7
High Static Motor and Drive – 838–1084 RPM, Max BHP 2.8

Table 44 – 50HCQD08 **7.5 TON VERTICAL SUPPLY**

CFM	AVAILABLE EXTERNAL STATIC PRESSURE (IN. WG)									
	0.2		0.4		0.6		0.8		1.0	
	RPM	BHP	RPM	BHP	RPM	BHP	RPM	BHP	RPM	BHP
2250	457	0.32	536	0.44	604	0.55	664	0.67	719	0.79
2438	481	0.39	557	0.51	623	0.64	682	0.77	735	0.89
2625	505	0.47	578	0.60	642	0.73	700	0.87	753	1.00
2813	530	0.55	601	0.70	663	0.84	719	0.98	771	1.13
3000	556	0.65	623	0.80	684	0.95	738	1.11	789	1.26
3188	582	0.76	647	0.92	705	1.08	759	1.25	808	1.41
3375	608	0.88	671	1.05	727	1.22	779	1.40	828	1.57
3563	634	1.01	695	1.19	750	1.38	801	1.56	848	1.74
3750	661	1.16	719	1.35	773	1.54	822	1.73	869	1.93

CFM	AVAILABLE EXTERNAL STATIC PRESSURE (IN. WG)									
	1.2		1.4		1.6		1.8		2.0	
	RPM	BHP	RPM	BHP	RPM	BHP	RPM	BHP	RPM	BHP
2250	770	0.91	817	1.03	861	1.15	903	1.28	943	1.40
2438	785	1.02	832	1.15	876	1.28	917	1.41	957	1.55
2625	802	1.14	847	1.28	891	1.42	932	1.56	971	1.70
2813	819	1.27	864	1.42	907	1.57	947	1.72	986	1.87
3000	836	1.42	881	1.57	923	1.73	963	1.89	1001	2.05
3188	855	1.57	898	1.74	940	1.90	979	2.07	1017	2.24
3375	873	1.74	916	1.91	957	2.09	996	2.26	1034	2.44
3563	893	1.92	935	2.11	975	2.29	1014	2.47	1051	2.66
3750	912	2.12	954	2.31	994	2.50	1031	2.70	1068	2.89

Std Static Motor and Drive – 518–733 RPM, Max BHP 1.2
Med Static Motor and Drive – 690–936 RPM, Max BHP 1.7
High Static Motor and Drive – 838–1084 RPM, Max BHP 2.8

FAN PERFORMANCE (cont.)

Table 45 – 50HCQD09 **8.5 TON HORIZONTAL SUPPLY**

CFM	AVAILABLE EXTERNAL STATIC PRESSURE (IN. WG)									
	0.2		0.4		0.6		0.8		1.0	
	RPM	BHP	RPM	BHP	RPM	BHP	RPM	BHP	RPM	BHP
2550	468	0.39	546	0.52	618	0.66	684	0.80	747	0.96
2763	493	0.47	567	0.61	635	0.76	699	0.91	760	1.07
2975	520	0.57	589	0.72	654	0.87	716	1.03	774	1.20
3188	547	0.68	613	0.83	675	1.00	733	1.17	789	1.34
3400	575	0.80	637	0.96	696	1.14	752	1.31	806	1.50
3613	603	0.94	662	1.11	719	1.29	773	1.48	824	1.67
3825	631	1.09	688	1.27	742	1.46	794	1.66	843	1.86
4038	660	1.26	714	1.45	766	1.65	816	1.85	864	2.06
4250	689	1.45	741	1.65	790	1.86	838	2.07	885	2.29

CFM	AVAILABLE EXTERNAL STATIC PRESSURE (IN. WG)									
	1.2		1.4		1.6		1.8		2.0	
	RPM	BHP	RPM	BHP	RPM	BHP	RPM	BHP	RPM	BHP
2550	806	1.11	863	1.28	916	1.45	968	1.62	1018	1.80
2763	817	1.24	871	1.41	924	1.59	974	1.77	1022	1.95
2975	829	1.37	882	1.55	932	1.74	981	1.93	1028	2.12
3188	843	1.53	894	1.71	943	1.90	990	2.10	1036	2.30
3400	858	1.69	907	1.88	955	2.09	1001	2.29	1046	2.50
3613	874	1.87	922	2.07	968	2.28	1013	2.49	1057	2.71
3825	891	2.07	938	2.28	983	2.49	1027	2.71	1069	2.94
4038	910	2.28	955	2.50	999	2.72	1041	2.95	1083	3.19
4250	930	2.51	973	2.74	1015	2.97	1057	3.21	1097	3.45

Std static – 460–652 RPM, Max BHP 1.2
Med static – 591–838 RPM, Max BHP 2.9
High static – 838–1084 RPM, Max BHP 2.9

Table 46 – 50HCQD09 **8.5 VERTICAL SUPPLY**

CFM	AVAILABLE EXTERNAL STATIC PRESSURE (IN. WG)									
	0.2		0.4		0.6		0.8		1.0	
	RPM	BHP	RPM	BHP	RPM	BHP	RPM	BHP	RPM	BHP
2550	495	0.43	570	0.56	634	0.70	693	0.83	746	0.96
2763	524	0.53	595	0.67	657	0.81	714	0.95	766	1.09
2975	552	0.63	620	0.79	681	0.94	736	1.09	787	1.24
3188	582	0.76	647	0.92	705	1.08	759	1.25	808	1.41
3400	611	0.89	674	1.07	730	1.24	782	1.42	831	1.59
3613	641	1.05	701	1.23	756	1.42	806	1.60	854	1.79
3825	672	1.22	729	1.42	782	1.61	831	1.81	877	2.00
4038	702	1.41	758	1.62	809	1.83	857	2.03	901	2.24
4250	733	1.62	787	1.84	836	2.06	883	2.28	926	2.49

CFM	AVAILABLE EXTERNAL STATIC PRESSURE (IN. WG)									
	1.2		1.4		1.6		1.8		2.0	
	RPM	BHP	RPM	BHP	RPM	BHP	RPM	BHP	RPM	BHP
2550	795	1.09	841	1.23	885	1.36	926	1.50	965	1.64
2763	814	1.24	859	1.38	902	1.53	943	1.68	982	1.82
2975	834	1.40	878	1.55	921	1.71	961	1.86	999	2.02
3188	855	1.57	898	1.74	940	1.90	979	2.07	1017	2.24
3400	876	1.76	919	1.94	960	2.12	998	2.29	1036	2.47
3613	898	1.97	940	2.16	980	2.34	1018	2.53	1055	2.72
3825	921	2.20	962	2.40	1001	2.59	1039	2.79	1075	2.99
4038	944	2.45	984	2.65	1023	2.86	1060	3.07	1096	3.27
4250	968	2.71	1007	2.93	1045	3.15	1081	3.36	1117	3.58

Std static – 460–652 RPM, Max BHP 1.2
Med static – 591–838 RPM, Max BHP 2.9
High static – 838–1084 RPM, Max BHP 2.9

FAN PERFORMANCE (cont.)

Table 47 – 50HCQD12 **10 TON HORIZONTAL SUPPLY**

CFM	AVAILABLE EXTERNAL STATIC PRESSURE (IN. WG)									
	0.2		0.4		0.6		0.8		1.0	
	RPM	BHP	RPM	BHP	RPM	BHP	RPM	BHP	RPM	BHP
3000	335	0.32	**421**	**0.51**	500	0.74	572	1.00	637	1.29
3250	**350**	**0.38**	**430**	**0.58**	505	0.81	575	1.08	640	1.37
3500	**365**	**0.45**	441	0.65	512	0.89	579	1.16	642	1.46
3750	**381**	**0.53**	452	0.74	520	0.98	584	1.26	645	1.56
4000	**397**	**0.61**	464	0.83	529	1.08	590	1.36	650	1.67
4250	**413**	**0.70**	477	0.93	538	1.19	598	1.47	655	1.78
4500	**429**	**0.81**	491	1.05	549	1.31	606	1.60	661	1.91
4750	445	0.92	505	1.17	561	1.44	615	1.73	667	2.05
5000	462	1.04	519	1.30	573	1.58	625	1.88	675	2.21

CFM	AVAILABLE EXTERNAL STATIC PRESSURE (IN. WG)									
	1.2		1.4		1.6		1.8		2.0	
	RPM	BHP	RPM	BHP	RPM	BHP	RPM	BHP	RPM	BHP
3000	697	1.59	751	1.91	801	2.24	847	2.59	891	2.94
3250	699	1.68	753	2.01	803	2.35	850	2.71	895	3.08
3500	701	1.78	755	2.12	806	2.47	853	2.84	898	3.22
3750	703	1.88	757	2.23	808	2.59	855	2.97	900	3.36
4000	706	2.00	*759*	*2.35*	809	2.72	857	3.11	902	3.51
4250	709	2.12	*761*	*2.48*	811	2.86	858	3.25	903	3.66
4500	714	2.25	765	2.62	813	3.00	860	3.40	905	3.82
4750	719	2.40	768	2.77	816	3.15	862	3.56	906	3.99
5000	725	2.55	773	2.93	820	3.32	865	3.73	908	4.16

Std Static Motor and Drive – 440–609 RPM, Max BHP 2.4
Med Static Motor and Drive – 547–757 RPM, Max BHP 2.9
High Static Motor and Drive – 762–963 RPM, Max BHP 6.1

Boldface – Field–supplied Drive (motor pulley KR11HY151)
Italics – Field–supplied drive (motor pulley KR11HY186)

Table 48 – 50HCQD12 **10 VERTICAL SUPPLY**

CFM	AVAILABLE EXTERNAL STATIC PRESSURE (IN. WG)									
	0.2		0.4		0.6		0.8		1.0	
	RPM	BHP	RPM	BHP	RPM	BHP	RPM	BHP	RPM	BHP
3000	**383**	**0.39**	470	0.60	549	0.85	620	1.13	684	1.42
3250	**402**	**0.47**	483	0.68	559	0.94	629	1.22	692	1.53
3500	**421**	**0.55**	498	0.78	570	1.04	637	1.33	699	1.65
3750	441	0.65	513	0.88	582	1.15	647	1.45	707	1.78
4000	461	0.75	529	0.99	594	1.27	657	1.58	716	1.91
4250	481	0.87	545	1.12	608	1.41	668	1.72	725	2.06
4500	502	1.01	563	1.26	622	1.55	680	1.88	735	2.22
4750	522	1.15	581	1.42	637	1.72	693	2.05	746	2.40
5000	543	1.31	599	1.59	653	1.90	706	2.23	*758*	*2.59*

CFM	AVAILABLE EXTERNAL STATIC PRESSURE (IN. WG)									
	1.2		1.4		1.6		1.8		2.0	
	RPM	BHP	RPM	BHP	RPM	BHP	RPM	BHP	RPM	BHP
3000	742	1.73	795	2.05	845	2.38	891	2.73	935	3.08
3250	749	1.85	802	2.19	852	2.54	899	2.89	943	3.26
3500	756	1.98	809	2.33	859	2.69	906	3.06	950	3.45
3750	764	2.12	816	2.48	866	2.86	912	3.24	956	3.64
4000	771	2.27	824	2.64	873	3.03	919	3.42	963	3.83
4250	780	2.43	831	2.81	880	3.21	926	3.62	970	4.04
4500	788	2.60	839	2.99	887	3.40	933	3.82	976	4.25
4750	798	2.78	847	3.18	895	3.60	940	4.03	983	4.47
5000	808	2.98	856	3.38	903	3.81	947	4.25	990	4.71

Std Static Motor and Drive – 440–609 RPM, Max BHP 2.4
Med Static Motor and Drive – 547–757 RPM, Max BHP 2.9
High Static Motor and Drive – 762–963 RPM, Max BHP 6.1

Boldface – Field–supplied Drive (motor pulley KR11HY151)
Italics – Field–supplied drive (motor pulley KR11HY186)
Underline – Field–supplied (motor pulley KR11HY194)

Table 49 – PULLEY ADJUSTMENT

UNIT		MOTOR/DRIVE COMBO	MOTOR PULLEY TURNS OPEN										
			0	0.5	1	1.5	2	2.5	3	3.5	4	4.5	5
04	3 phase	Medium Static	1251	1208	1165	1121	1078	1035	992	949	905	862	819
		High Static	1466	1423	1380	1337	1294	1251	1207	1164	1121	1078	1035
05	3 phase	Medium Static	1303	1265	1226	1188	1150	1112	1073	1035	997	958	920
		High Static	1466	1423	1380	1337	1294	1251	1207	1164	1121	1078	1035
06	3 phase	Medium Static	1380	1349	1317	1286	1254	1223	1192	1160	1129	1097	1066
		High Static	1639	1596	1553	1510	1467	1424	1380	1337	1294	1251	1208
07	3 phase	Standard Static	747	721	695	670	644	618	592	566	541	515	489
		Medium Static	949	927	906	884	863	841	819	798	776	755	733
		High Static	1102	1083	1063	1044	1025	1006	986	967	948	928	909
08	3 phase	Standard Static	733	712	690	669	647	626	604	583	561	540	518
		Medium Static	936	911	887	862	838	813	788	764	739	715	690
		High Static	1084	1059	1035	1010	986	961	936	912	887	863	838
09	3 phase	Standard Static	652	633	614	594	575	556	537	518	498	479	460
		Medium Static	838	813	789	764	739	715	690	665	640	616	591
		High Static	1084	1059	1035	1010	986	961	936	912	887	863	838
12	3 phase	Standard Static	609	592	575	558	541	525	508	491	474	457	440
		Medium Static	757	736	715	694	673	652	631	610	589	568	547
		High Static	963	943	923	903	883	863	842	822	802	782	762

NOTE: Do not adjust pulley further than 5 turns open.

– Factory settings

* Do not set motor pulley above 5 turns open for A or AX section belts

** Do not set motor pulley below 1 turn open for B or BX section belts

ECONOMIZER, BAROMETRIC RELIEF AND PE PERFORMANCE

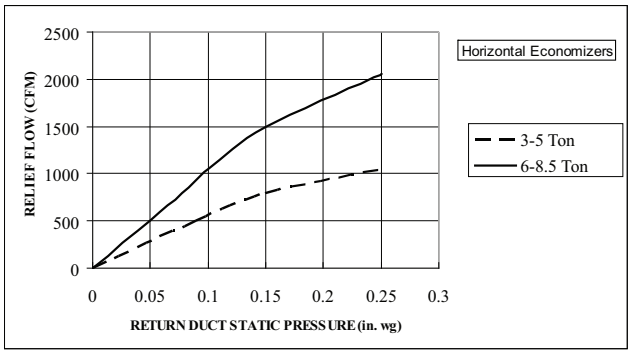

C10612

Fig. 16 - Barometric Relief Flow Capacity

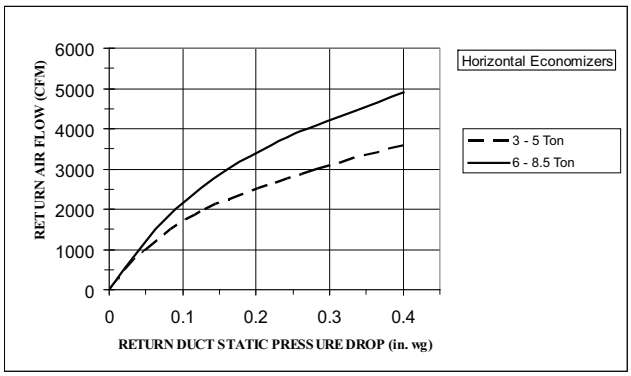

C10614

Fig. 17 - Return Air Pressure Drop

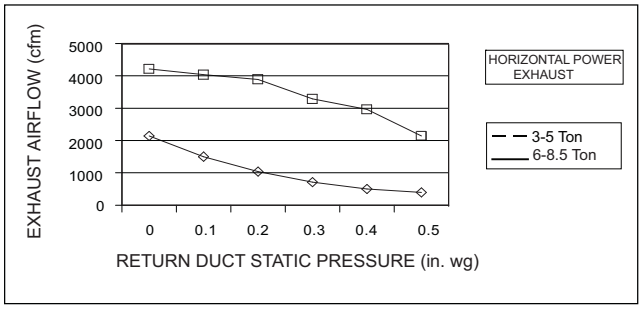

C10615

Fig. 18 - Horizontal Power Exhaust Performance

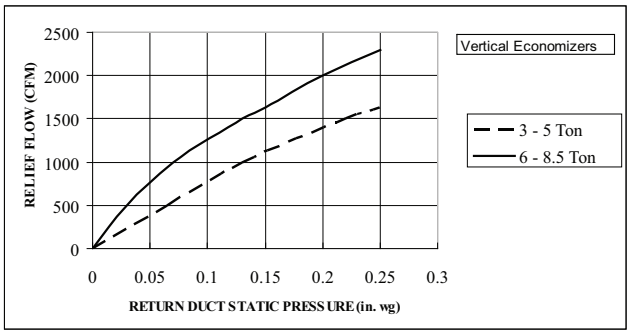

C10616

Fig. 19 - Barometric Relief Flow Capacity

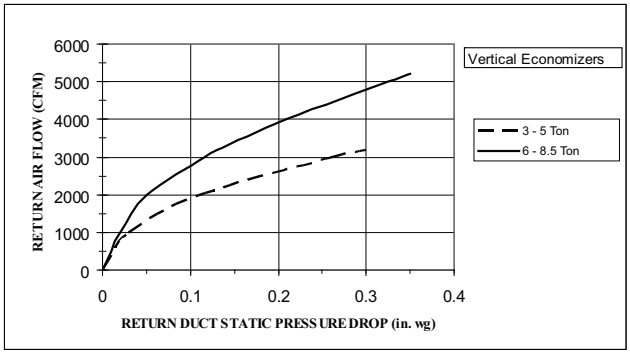

C10618

Fig. 20 - Return Air Pressure Drop

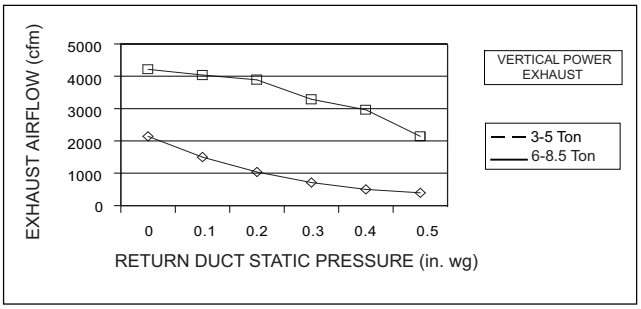

C10619

Fig. 21 - Vertical Power Exhaust Performance

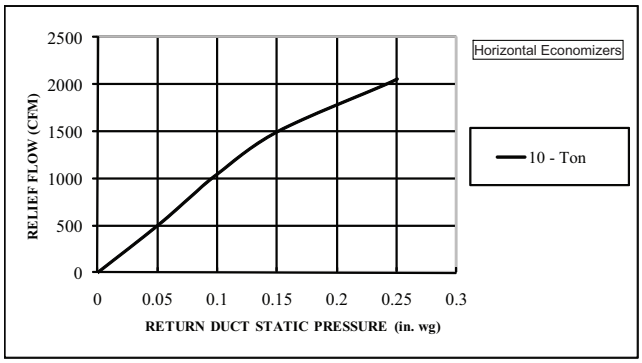

C101018

Fig. 22 - Barometric Relief Flow Capacity

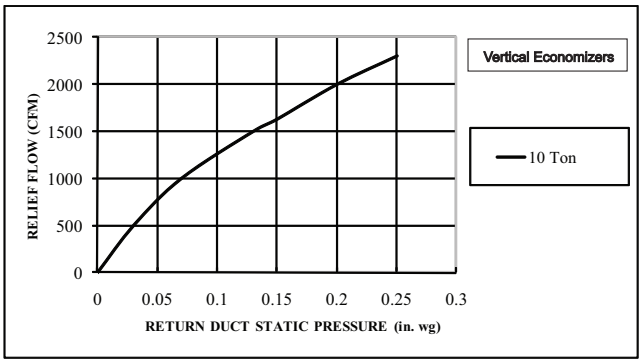

C101020

Fig. 25 - Barometric Relief Flow Capacity

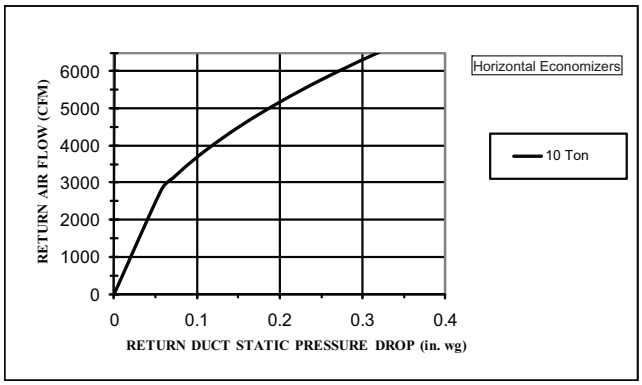

C101019

Fig. 23 - Return Air Pressure Drop

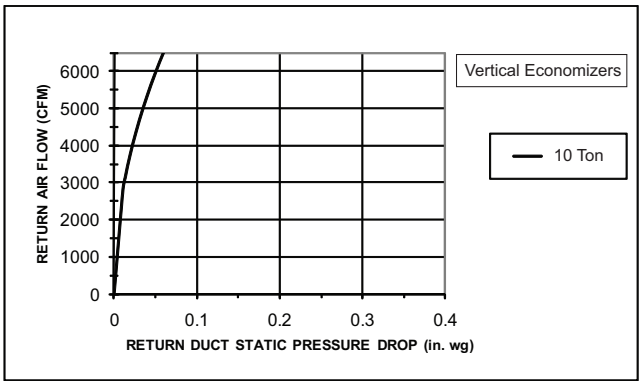

C101021

Fig. 26 - Return Air Pressure Drop

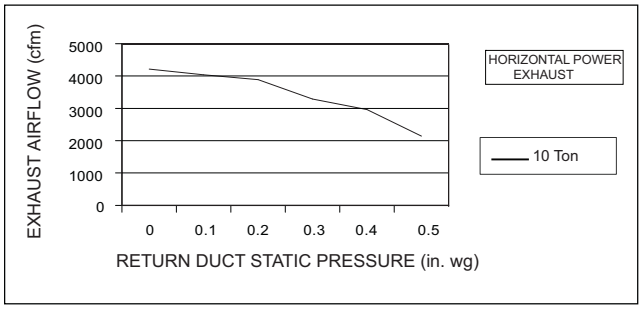

C101022

Fig. 24 - Horizontal Power Exhaust Performance

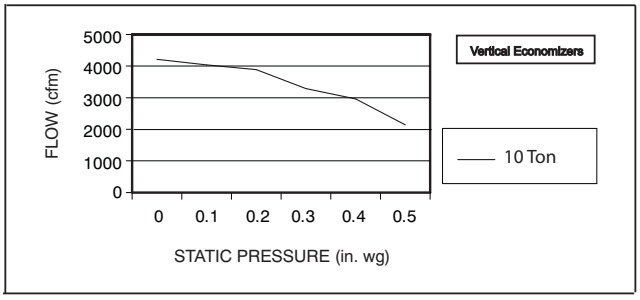

C101027

Fig. 27 - Vertical Power Exhaust Performance

Table 50 – 50HCQA04 **1-Stage Cooling** **3 TONS**

V–Ph–Hz	VOLTAGE RANGE		COMP (ea)		OFM (ea)		IFM		
	MIN	MAX	RLA	LRA	WATTS	FLA	TYPE	EFF at Full Load	FLA
208–1–60	187	253	16.6	79	190	1.0	DD–STD	84%	7.4
230–1–60	187	253	16.6	79	190	1.0	DD–STD	84%	7.4
208–3–60	187	253	10.4	73	190	1.0	DD–STD	84%	7.4
							MED	80%	5.2
							HIGH	80%	5.2
230–3–60	187	253	10.4	73	190	1.0	DD–STD	84%	7.4
							MED	80%	5.2
							HIGH	80%	5.2
460–3–60	414	506	5.8	38	190	0.5	DD–STD	84%	4.0
							MED	80%	2.6
							HIGH	80%	2.6
575–3–60	518	633	3.8	37	190	0.5	DD–STD	84%	4.0
							MED	80%	2.4
							HIGH	80%	2.0

Table 51 – 50HCQA05 **1-Stage Cooling** **4 TONS**

V–Ph–Hz	VOLTAGE RANGE		COMP (ea)		OFM (ea)		IFM		
	MIN	MAX	RLA	LRA	WATTS	FLA	TYPE	EFF at Full Load	FLA
208–1–60	187	253	19.8	109	325	1.4	DD–STD	84%	7.4
230–1–60	187	253	19.8	109	325	1.4	DD–STD	84%	7.4
208–3–60	187	253	13.1	83	325	1.4	DD–STD	84%	7.4
							MED	80%	5.2
							HIGH	80%	5.2
230–3–60	187	253	13.1	83	325	1.4	DD–STD	84%	7.4
							MED	80%	5.2
							HIGH	80%	5.2
460–3–60	414	506	6.1	41	325	0.8	DD–STD	84%	4.0
							MED	80%	2.6
							HIGH	80%	2.6
575–3–60	518	633	4.4	33	325	0.8	DD–STD	84%	4.0
							MED	80%	2.4
							HIGH	80%	2.0

Table 52 – 50HCQA06 **1-Stage Cooling** **5 TONS**

V–Ph–Hz	VOLTAGE RANGE		COMP (ea)		OFM (ea)		IFM		
	MIN	MAX	RLA	LRA	WATTS	FLA	TYPE	EFF at Full Load	FLA
208–1–60	187	253	25.0	134	325	1.4	DD–STD	84%	7.4
230–1–60	187	253	25.0	134	325	1.4	DD–STD	84%	7.4
208–3–60	187	253	15.9	110	325	1.4	DD–STD	84%	7.4
							MED	80%	5.2
							HIGH	81%	7.5
230–3–60	187	253	15.9	110	325	1.4	DD–STD	84%	7.4
							MED	80%	5.2
							HIGH	81%	7.5
460–3–60	414	506	7.0	52	325	0.8	DD–STD	84%	4.0
							MED	80%	2.6
							HIGH	81%	3.4
575–3–60	518	633	5.1	40	325	0.8	DD–STD	84%	4.0
							MED	80%	2.0
							HIGH	81%	2.8

Table 53 – 50HCQA07 **1-Stage Cooling** **6 TONS**

V–Ph–Hz	VOLTAGE RANGE		COMP (ea)		OFM (ea)		IFM		
	MIN	MAX	RLA	LRA	WATTS	FLA	TYPE	EFF at Full Load	FLA
208–3–60	187	253	19.0	123	325	1.5	STD MED HIGH	80% 80% 80%	5.2 7.5 15.0
230–3–60	187	253	19.0	123	325	1.5	STD MED HIGH	80% 80% 80%	5.2 7.5 15.0
460–3–60	414	506	9.7	62	325	0.8	STD MED HIGH	80% 80% 80%	2.6 3.4 7.4
575–3–60	518	633	7.4	50	325	0.6	STD MED HIGH	80% 80% 80%	2.4 2.8 5.6

Table 54 – 50HCQD08 **2-Stage Cooling** **7.5 TONS**

V–Ph–Hz	VOLTAGE RANGE		COMP (Cir 1)		COMP (Cir 2)		OFM (ea)		IFM		
	MIN	MAX	RLA	LRA	RLA	LRA	WATTS	FLA	TYPE	EFF at Full Load	FLA
208–3–60	187	253	13.1	83	13.1	83	325	1.5	STD MED HIGH	80% 80% 81%	5.2 5.2 10.0
230–3–60	187	253	13.1	83	13.1	83	325	1.5	STD MED HIGH	80% 80% 81%	5.2 5.2 10.0
460–3–60	414	506	6.1	41	6.1	41	325	0.8	STD MED HIGH	80% 80% 81%	2.6 2.6 4.4
575–3–60	518	633	4.4	33	4.4	33	325	0.6	STD MED HIGH	80% 80% 81%	2.4 2.0 2.8

Table 55 – 50HCQD09 **2-Stage Cooling** **8.5 TONS**

V–Ph–Hz	VOLTAGE RANGE		COMP (Cir 1)		COMP (Cir 2)		OFM (ea)		IFM		
	MIN	MAX	RLA	LRA	RLA	LRA	WATTS	FLA	TYPE	EFF at Full Load	FLA
208–3–60	187	253	16.0	91	13.7	83	325	6.2	STD MED HIGH	80% 80% 81%	5.2 7.5 10.0
230–3–60	187	253	16.0	91	13.7	83	325	6.2	STD MED HIGH	80% 80% 81%	5.2 7.5 10.0
460–3–60	414	506	7.0	46	6.2	41	325	3.1	STD MED HIGH	80% 80% 81%	2.6 3.4 4.4
575–3–60	518	633	5.6	37	4.8	33	325	2.5	STD MED HIGH	80% 80% 81%	2.0 2.8 2.8

Table 56 – 50HCQD12 **2-Stage Cooling** **10 TONS**

V–Ph–Hz	VOLTAGE RANGE		COMP (Cir 1)		COMP (Cir 2)		OFM (ea)		IFM		
	MIN	MAX	RLA	LRA	RLA	LRA	WATTS	FLA	TYPE	EFF at Full Load	FLA
208–3–60	187	253	15.6	110	15.9	110	280	1.5	STD	80%	5.2
									MED	80%	7.5
									HIGH	80%	17.0
									HIGH High Eff.	89.5%	20.4
230–3–60	187	253	15.6	110	15.9	110	280	1.5	STD	80%	5.2
									MED	80%	7.5
									HIGH	80%	15.0
									HIGH High Eff.	89.5%	20.4
460–3–60	414	506	7.7	52	7.7	52	280	0.8	STD	80%	2.6
									MED	80%	3.4
									HIGH	80%	7.6
									HIGH High Eff.	89.5%	10.2
575–3–60	518	633	5.8	39	5.7	39	280	0.7	STD	80%	2.0
									MED	80%	2.8
									HIGH	81%	6.1
									HIGH High Eff.	89.5%	9.0

Table 57 – MCA/MOCP DETERMINATION WITHOUT C.O. OR UNPWRD C.O.

UNIT	NOM. V–PH–HZ	IFM TYPE	ELEC HTR		WITHOUT C.O. or UNPWR C.O.							
					WITHOUT P.E.				WITH P.E. (pwrd fr/unit)			
			NOM (kW)	FLA	MCA	MOCP	DISC. SIZE		MCA	MOCP	DISC. SIZE	
							FLA	LRA			FLA	LRA
50HCQA04	208/230–1–60	DD–STD	–	–	29.2	45	29	88	31.1	45	31	90
			3.3/4.4	15.9/18.3	49.0/52.0	60/60	47/50	104/106	50.9/53.9	60/60	49/52	106/108
			4.9/6.5	23.5/27.1	58.5/63.0	60/70	56/60	112/115	60.4/64.9	70/70	58/62	114/117
			6.5/8.7	31.4/36.3	68.4/74.5	70/80	65/70	119/124	70.3/76.4	80/80	67/73	121/126
			7.9/10.5	37.9/43.8	76.5/83.9	80/90	72/79	126/132	78.4/85.8	80/90	75/81	128/134
			9.8/13.0	46.9/54.2	87.8/96.9	90/100	83/91	182/196	89.7/98.8	90/100	85/93	184/198
	208/230–3–60	DD–STD	–	–	21.4	30	22	82	23.3	30	24	84
			3.3/4.4	9.2/10.6	32.9/34.7	40/40	32/34	91/93	34.8/36.6	40/40	34/36	93/95
			4.9/6.5	13.6/15.6	38.4/40.9	45/45	37/40	96/98	40.3/42.8	45/45	39/42	98/100
			6.5/8.7	18.1/20.9	44.0/47.5	45/50	42/46	100/103	45.9/49.4	50/50	45/48	102/105
			7.9/10.5	21.9/25.3	48.8/53.0	50/60	47/51	104/107	50.7/54.9	60/60	49/53	106/109
			12.0/16.0	33.4/38.5	63.2/69.5	70/70	60/66	115/121	65.1/71.4	70/80	62/68	117/123
		MED	–	–	19.2	25	19	94	21.1	30	21	96
			3.3/4.4	9.2/10.6	30.7/32.5	35/40	30/31	103/105	32.6/34.4	40/40	32/33	105/107
			4.9/6.5	13.6/15.6	36.2/38.7	40/45	35/37	108/110	38.1/40.6	45/45	37/39	110/112
			6.5/8.7	18.1/20.9	41.8/45.3	45/50	40/43	112/115	43.7/47.2	45/50	42/45	114/117
			7.9/10.5	21.9/25.3	46.6/50.8	50/60	44/48	116/119	48.5/52.7	50/60	46/50	118/121
			12.0/16.0	33.4/38.5	61.0/67.3	70/70	58/63	127/133	62.9/69.2	70/70	60/66	129/135
		HIGH	–	–	19.2	25	19	105	21.1	30	21	107
			3.3/4.4	9.2/10.6	30.7/32.5	35/40	30/31	114/116	32.6/34.4	40/40	32/33	116/118
			4.9/6.5	13.6/15.6	36.2/38.7	40/45	35/37	119/121	38.1/40.6	45/45	37/39	121/123
			6.5/8.7	18.1/20.9	41.8/45.3	45/50	40/43	123/126	43.7/47.2	45/50	42/45	125/128
			7.9/10.5	21.9/25.3	46.6/50.8	50/60	44/48	127/130	48.5/52.7	50/60	46/50	129/132
			12.0/16.0	33.4/38.5	61.0/67.3	70/70	58/63	138/144	62.9/69.2	70/70	60/66	140/146
	460–3–60	DD–STD	–	–	11.8	15	12	43	12.8	15	13	44
			6.0	7.2	20.8	25	20	50	21.8	25	21	51
			8.8	10.6	25.0	25	24	54	26.0	30	25	55
			11.5	13.8	29.0	30	28	57	30.0	30	29	58
			14.0	16.8	32.8	35	31	60	33.8	35	32	61
		MED	–	–	10.4	15	10	48	11.4	15	11	49
			6.0	7.2	19.4	20	19	55	20.4	25	20	56
			8.8	10.6	23.6	25	22	59	24.6	25	24	60
			11.5	13.8	27.6	30	26	62	28.6	30	27	63
			14.0	16.8	31.4	35	30	65	32.4	35	31	66
		HIGH	–	–	10.4	15	10	54	11.4	15	11	55
			6.0	7.2	19.4	20	19	61	20.4	25	20	62
			8.8	10.6	23.6	25	22	65	24.6	25	24	66
			11.5	13.8	27.6	30	26	68	28.6	30	27	69
			14.0	16.8	31.4	35	30	71	32.4	35	31	72
	575–3–60	DD–STD	–	–	9.3	15	10	42	11.2	15	12	44
		MED	–	–	7.7	15	8	45	9.6	15	10	47
		HIGH	–	–	7.3	15	7	49	9.2	15	9	51

LEGEND

C.O. – Convenience outlet
DD – Electric Drive X13 Motor
DISC – Disconnect
FLA – Full load amps
IFM – Indoor fan motor
LRA – Locked rotor amps
MCA – Minimum circuit amps
MOCP – Maximum over current protection
P.E. – Power exhaust
UNPWRD C.O. – Unpowered Convenience outlet

NOTES:

1. In compliance with NEC requirements for multimotor and combination load equipment (refer to NEC Articles 430 and 440), the overcurrent protective device for the unit shall be fuse or HACR breaker. Canadian units may be fuse or circuit breaker.
2. **Unbalanced 3-Phase Supply Voltage**
   Never operate a motor where a phase imbalance in supply voltage is greater than 2%. Use the following formula to determine the percentage of voltage imbalance.

$$\text{\% Voltage Imbalance} = 100 \times \frac{\text{max voltage deviation from average voltage}}{\text{average voltage}}$$

Example: Supply voltage is 230-3-60

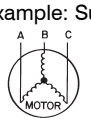

AB = 224V
BC = 231V
AC = 226V

$$\text{Average Voltage} = \frac{(224 + 231 + 226)}{3} = \frac{681}{3} = 227$$

Determine maximum deviation from average voltage.
(AB) 227 – 224 = 3V Maximum deviation is 4V.
(BC) 231 – 227 = 4V Determine percent of voltage imbalance.

$$\text{\% Voltage Imbalance} = 100 \times \frac{4}{227} = 1.76\%$$

This amount of phase imbalance is satisfactory as it is below the maximum allowable 2%.

IMPORTANT: If the supply voltage phase imbalance is more than 2%, contact your local electric utility company immediately.

Table 58 – MCA/MOCP DETERMINATION WITHOUT C.O. OR UNPWRD C.O.

UNIT	NOM. V–PH–HZ	IFM TYPE	ELEC HTR		WITHOUT C.O. or UNPWR C.O.							
					WITHOUT P.E.				WITH P.E. (pwrd fr/unit)			
			NOM (kW)	FLA	MCA	MOCP	DISC. SIZE		MCA	MOCP	DISC. SIZE	
							FLA	LRA			FLA	LRA
50HCQA05	208/230–1–60	DD–STD	–	–	33.6	50	33	119	35.5	50	35	121
			3.3/4.4	15.9/18.3	53.4/56.4	60/60	51/54	135/137	55.3/58.3	60/60	53/56	137/139
			6.5/8.7	31.4/36.3	72.8/78.9	80/80	69/75	150/155	74.7/80.8	80/90	71/77	152/157
			9.8/13.0	46.9/54.2	92.2/101.3	100/110	87/95	213/227	94.1/103.2	100/110	89/97	215/229
			13.1/17.4	62.8/72.5	112.1/124.2	125/125	105/116	245/264	114.0/126.1	125/150	107/118	247/266
			15.8/21.0	75.8/87.5	128.3/142.9	150/150	120/134	271/294	130.2/144.8	150/150	122/136	273/296
	208/230–3–60	DD–STD	–	–	25.2	30	25	93	27.1	40	27	95
			4.9/6.5	13.6/15.6	42.2/44.7	50/50	41/43	107/109	44.1/46.6	50/50	43/45	109/111
			6.5/8.7	18.1/20.9	47.8/51.3	50/60	46/49	111/114	49.7/53.2	50/60	48/51	113/116
			12.0/16.0	33.4/38.5	66.9/73.3	70/80	64/69	126/132	68.8/75.2	70/80	66/72	128/134
			15.8/21.0	43.8/50.5	79.9/88.3	80/90	76/83	181/194	81.8/90.2	90/100	78/85	183/196
		MED	–	–	23.0	30	23	105	24.9	30	25	107
			4.9/6.5	13.6/15.6	40.0/42.5	45/50	38/41	119/121	41.9/44.4	50/50	40/43	121/123
			6.5/8.7	18.1/20.9	45.6/49.1	50/50	43/47	123/126	47.5/51.0	50/60	46/49	125/128
			12.0/16.0	33.4/38.5	64.7/71.1	70/80	61/67	138/144	66.6/73.0	70/80	63/69	140/146
			15.8/21.0	43.8/50.5	77.7/86.1	80/90	73/81	193/206	79.6/88.0	80/90	75/83	195/208
		HIGH	–	–	23.0	30	23	116	24.9	30	25	118
			4.9/6.5	13.6/15.6	40.0/42.5	45/50	38/41	130/132	41.9/44.4	50/50	40/43	132/134
			6.5/8.7	18.1/20.9	45.6/49.1	50/50	43/47	134/137	47.5/51.0	50/60	46/49	136/139
			12.0/16.0	33.4/38.5	64.7/71.1	70/80	61/67	149/155	66.6/73.0	70/80	63/69	151/157
			15.8/21.0	43.8/50.5	77.7/86.1	80/90	73/81	204/217	79.6/88.0	80/90	75/83	206/219
	460–3–60	DD–STD	–	–	12.4	15	13	47	13.4	15	14	48
			6.0	7.2	21.4	25	21	54	22.4	25	22	55
			11.5	13.8	29.7	30	28	61	30.7	35	30	62
			14.0	16.8	33.4	35	32	64	34.4	35	33	65
			23.0	27.7	47.1	50	44	102	48.1	50	46	103
		MED	–	–	11.0	15	11	52	12.0	15	12	53
			6.0	7.2	20.0	25	19	59	21.0	25	20	60
			11.5	13.8	28.3	30	27	66	29.3	30	28	67
			14.0	16.8	32.0	35	30	69	33.0	35	31	70
			23.0	27.7	45.7	50	43	107	46.7	50	44	108
		HIGH	–	–	11.0	15	11	58	12.0	15	12	59
			6.0	7.2	20.0	25	19	65	21.0	25	20	66
			11.5	13.8	28.3	30	27	72	29.3	30	28	73
			14.0	16.8	32.0	35	30	75	33.0	35	31	76
			23.0	27.7	45.7	50	43	113	46.7	50	44	114
	575–3–60	DD–STD	–	–	10.3	15	11	39	12.2	15	13	41
		MED	–	–	8.7	15	9	42	10.6	15	11	44
		HIGH	–	–	8.3	15	8	46	10.2	15	10	48

See page 64 for Legend and Notes.

Table 59 – MCA/MOCP DETERMINATION WITHOUT C.O. OR UNPWRD C.O.

UNIT	NOM. V–PH–HZ	IFM TYPE	ELEC HTR NOM (kW)	ELEC HTR FLA	WITHOUT C.O. or UNPWR C.O. WITHOUT P.E. MCA	WITHOUT P.E. MOCP	WITHOUT P.E. DISC. SIZE FLA	WITHOUT P.E. DISC. SIZE LRA	WITH P.E. (pwrd fr/unit) MCA	WITH P.E. MOCP	WITH P.E. DISC. SIZE FLA	WITH P.E. DISC. SIZE LRA
50HCQA06	208/230–1–60	DD–STD	–	–	40.1	60	39	144	42.0	60	41	146
			4.9/6.5	23.5/27.1	69.4/73.9	80/80	66/70	168/171	71.3/75.8	80/80	68/72	170/173
			6.5/8.7	31.4/36.3	79.3/85.4	80/100	75/81	175/180	81.2/87.3	90/100	77/83	177/182
			9.8/13.0	46.9/54.2	98.7/107.8	100/110	93/101	238/252	100.6/109.7	110/110	95/103	240/254
			13.1/17.4	62.8/72.5	118.6/130.7	125/150	111/122	270/289	120.5/132.6	125/150	113/124	272/291
			15.8/21.0	75.8/87.5	134.8/149.4	150/150	126/139	296/319	136.7/151.3	150/175	128/142	298/321
	208/230–3–60	DD–STD	–	–	28.7	40	28	120	30.6	45	31	122
			4.9/6.5	13.6/15.6	45.7/48.2	50/60	44/46	134/136	47.6/50.1	60/60	46/49	136/138
			7.9/10.5	21.9/25.3	56.1/60.3	60/70	54/58	142/145	58.0/62.2	60/70	56/60	144/147
			12.0/16.0	33.4/38.5	70.4/76.8	80/80	67/73	153/159	72.3/78.7	80/80	69/75	155/161
			15.8/21.0	43.8/50.5	83.4/91.8	90/100	79/86	208/221	85.3/93.7	90/100	81/89	210/223
			19.9/26.5	55.2/63.8	97.7/108.4	100/110	92/102	230/248	99.6/110.3	100/125	94/104	232/250
		MED	–	–	26.5	40	26	143	28.4	40	28	145
			4.9/6.5	13.6/15.6	43.5/46.0	50/50	42/44	157/159	45.4/47.9	50/50	44/46	159/161
			7.9/10.5	21.9/25.3	53.9/58.1	60/60	51/55	165/168	55.8/60.0	60/60	53/57	167/170
			12.0/16.0	33.4/38.5	68.2/74.6	70/80	64/70	176/182	70.1/76.5	80/80	66/72	178/184
			15.8/21.0	43.8/50.5	81.2/89.6	90/90	76/84	231/244	83.1/91.5	90/100	78/86	233/246
			19.9/26.5	55.2/63.8	95.5/106.2	100/110	89/99	253/271	97.4/108.1	100/110	92/101	255/273
		HIGH	–	–	28.8	40	29	169	30.7	45	31	171
			4.9/6.5	13.6/15.6	45.8/48.3	50/60	44/46	183/185	47.7/50.2	60/60	46/49	185/187
			7.9/10.5	21.9/25.3	56.2/60.4	60/70	54/58	191/194	58.1/62.3	60/70	56/60	193/196
			12.0/16.0	33.4/38.5	70.5/76.9	80/80	67/73	202/208	72.4/78.8	80/80	69/75	204/210
			15.8/21.0	43.8/50.5	83.5/91.9	90/100	79/87	257/270	85.4/93.8	90/100	81/89	259/272
			19.9/26.5	55.2/63.8	97.8/108.5	100/110	92/102	279/297	99.7/110.4	100/125	94/104	281/299
	460–3–60	DD–STD	–	–	13.6	20	14	58	14.6	20	15	59
			6.0	7.2	22.6	25	22	65	23.6	25	23	66
			11.5	13.8	30.8	35	29	72	31.8	35	31	73
			14.0	16.8	34.6	35	33	75	35.6	40	34	76
			23.0	27.7	48.2	50	45	113	49.2	50	47	114
			25.5	30.7	51.9	60	49	119	52.9	60	50	120
		MED	–	–	12.2	15	12	69	13.2	20	13	70
			6.0	7.2	21.2	25	20	76	22.2	25	21	77
			11.5	13.8	29.4	30	28	83	30.4	35	29	84
			14.0	16.8	33.2	35	31	86	34.2	35	32	87
			23.0	27.7	46.8	50	44	124	47.8	50	45	125
			25.5	30.7	50.5	60	47	130	51.5	60	48	131
		HIGH	–	–	13.0	15	13	82	14.0	20	14	83
			6.0	7.2	22.0	25	21	89	23.0	25	22	90
			11.5	13.8	30.2	35	29	96	31.2	35	30	97
			14.0	16.8	34.0	35	32	99	35.0	35	33	100
			23.0	27.7	47.6	50	45	137	48.6	50	46	138
			25.5	30.7	51.3	60	48	143	52.3	60	49	144
	575–3–60	DD–STD	–	–	11.2	15	11	46	13.1	15	14	48
		MED	–	–	9.2	15	9	53	11.1	15	11	55
		HIGH	–	–	10.0	15	10	64	11.9	15	12	66

See page 64 for Legend and Notes.

Table 60 – MCA/MOCP DETERMINATION WITHOUT C.O. OR UNPWRD C.O.

UNIT	NOM. V–PH–HZ	IFM TYPE	ELEC HTR		WITHOUT C.O. or UNPWR C.O.							
					WITHOUT P.E.				WITH P.E. (pwrd fr/unit)			
			Nom (kW)	FLA	MCA	MOCP	DISC. SIZE		MCA	MOCP	DISC. SIZE	
							FLA	LRA			FLA	LRA
50HCQA07	208/230–3–60	STD	–	–	32.0	50	31	148	35.8	50	36	152
			4.9/6.5	13.6/15.6	49.0/51.5	60/60	47/49	162/164	52.8/55.3	60/60	51/54	166/168
			7.8/10.4	21.7/25.0	59.1/63.2	60/70	56/60	170/173	62.9/67.0	70/70	61/64	174/177
			12.0/16.0	33.4/38.5	73.7/80.1	80/90	70/76	181/187	77.5/83.9	80/90	74/80	185/191
			15.8/21.0	43.8/50.5	86.7/95.1	90/100	82/89	236/249	90.5/98.9	100/100	86/94	240/253
			19.9/26.5	55.2/63.8	101.0/111.7	110/125	95/105	258/276	104.8/115.5	110/125	99/109	262/280
		MED	–	–	34.3	50	34	185	38.1	50	38	189
			4.9/6.5	13.6/15.6	51.3/53.8	60/60	50/52	199/201	55.1/57.6	60/60	54/56	203/205
			7.8/10.4	21.7/25.0	61.4/65.5	70/70	59/63	207/210	65.2/69.3	70/80	63/67	211/214
			12.0/16.0	33.4/38.5	76.0/82.4	80/90	72/78	218/224	79.8/86.2	80/90	77/83	222/228
			15.8/21.0	43.8/50.5	89.0/97.4	90/100	84/92	273/286	92.8/101.2	100/110	89/96	277/290
			19.9/26.5	55.2/63.8	103.3/114.0	110/125	97/107	295/313	107.1/117.8	110/125	102/112	299/317
		HIGH	–	–	41.8	60	43	211	45.6	60	47	215
			4.9/6.5	13.6/15.6	58.8/61.3	70/70	58/60	225/227	62.6/65.1	70/80	63/65	229/231
			7.8/10.4	21.7/25.0	68.9/73.0	80/80	68/71	233/236	72.7/76.8	80/80	72/76	237/240
			12.0/16.0	33.4/38.5	83.5/89.9	90/90	81/87	244/250	87.3/93.7	90/100	85/91	248/254
			15.8/21.0	43.8/50.5	96.5/104.9	100/110	93/101	299/312	100.3/108.7	110/110	97/105	303/316
			19.9/26.5	55.2/63.8	110.8/121.5	125/125	106/116	321/339	114.6/125.3	125/150	110/120	325/343
	460–3–60	STD	–	–	16.3	25	16	75	18.1	25	18	77
			6.0	7.2	25.3	30	24	82	27.1	30	26	84
			11.5	13.8	33.6	35	32	89	35.4	40	34	91
			14.0	16.8	37.3	40	35	92	39.1	40	37	94
			23.0	27.7	51.0	60	48	103	52.8	60	50	105
			25.5	30.7	54.7	60	51	106	56.5	60	53	108
		MED	–	–	17.1	25	17	94	18.9	25	19	96
			6.0	7.2	26.1	30	25	101	27.9	30	27	103
			11.5	13.8	34.4	40	33	108	36.2	40	35	110
			14.0	16.8	38.1	40	36	111	39.9	45	38	113
			23.0	27.7	51.8	60	49	122	53.6	60	51	124
			25.5	30.7	55.5	60	52	125	57.3	60	54	127
		HIGH	–	–	21.1	30	22	107	22.9	30	24	109
			6.0	7.2	30.1	35	30	114	31.9	35	32	116
			11.5	13.8	38.4	40	37	121	40.2	45	39	123
			14.0	16.8	42.1	45	41	124	43.9	45	43	126
			23.0	27.7	55.8	60	53	135	57.6	60	55	137
			25.5	30.7	59.5	60	57	138	61.3	70	59	140
	575–3–60	STD	–	–	12.9	20	13	61	16.7	20	17	65
		MED	–	–	13.3	20	13	76	17.1	20	17	80
		HIGH	–	–	16.1	20	16	90	19.9	25	21	94

See page 64 for Legend and Notes.

Table 61 – MCA/MOCP DETERMINATION WITHOUT C.O. OR UNPWRD C.O.

UNIT	NOM. V–PH–HZ	IFM TYPE	ELEC HTR		WITHOUT C.O. or UNPWR C.O.							
					WITHOUT P.E.				WITH P.E. (pwrd fr/unit)			
			Nom (kW)	FLA	MCA	MOCP	DISC. SIZE		MCA	MOCP	DISC. SIZE	
							FLA	LRA			FLA	LRA
50HCQD08	208/230–3–60	STD	–	–	37.7	50	40	191	41.5	50	44	195
			7.8/10.4	21.7/25.0	64.8/68.9	70/70	65/68	213/216	68.6/72.7	70/80	69/73	217/220
			12.0/16.0	33.4/38.5	79.4/85.8	80/90	78/84	224/230	83.2/89.6	90/90	82/88	228/234
			18.6/24.8	51.7/59.7	102.3/112.3	110/125	99/108	243/251	106.1/116.1	110/125	103/113	247/255
			24.0/32.0	66.7/77.0	121.1/133.9	125/150	116/128	258/268	124.9/137.7	125/150	121/132	262/272
			31.8/42.4	88.4/102.0	148.2/165.2	150/175	141/157	368/395	152.0/169.0	175/175	146/161	372/399
		MED	–	–	37.7	50	40	202	41.5	50	44	206
			7.8/10.4	21.7/25.0	64.8/68.9	70/70	65/68	224/227	68.6/72.7	70/80	69/73	228/231
			12.0/16.0	33.4/38.5	79.4/85.8	80/90	78/84	235/241	83.2/89.6	90/90	82/88	239/245
			18.6/24.8	51.7/59.7	102.3/112.3	110/125	99/108	254/262	106.1/116.1	110/125	103/113	258/266
			24.0/32.0	66.7/77.0	121.1/133.9	125/150	116/128	269/279	124.9/137.7	125/150	121/132	273/283
			31.8/42.4	88.4/102.0	148.2/165.2	150/175	141/157	379/406	152.0/169.0	175/175	146/161	383/410
		HIGH	–	–	42.5	50	45	245	46.3	50	49	249
			7.8/10.4	21.7/25.0	69.6/73.7	70/80	70/74	267/270	73.4/77.5	80/80	74/78	271/274
			12.0/16.0	33.4/38.5	84.2/90.6	90/100	83/89	278/284	88.0/94.4	90/100	88/94	282/288
			18.6/24.8	51.7/59.7	107.1/117.1	110/125	105/114	297/305	110.9/120.9	125/125	109/118	301/309
			24.0/32.0	66.7/77.0	125.9/138.7	150/150	122/134	312/322	129.7/142.5	150/150	126/138	316/326
			31.8/42.4	88.4/102.0	153.0/170.0	175/175	147/162	422/449	156.8/173.8	175/175	151/167	426/453
	460–3–60	STD	–	–	17.9	20	19	95	19.7	25	21	97
			13.9	16.7	38.8	40	38	112	40.6	45	40	114
			16.5	19.8	42.7	45	42	115	44.5	45	44	117
			27.8	33.4	59.7	60	57	128	61.5	70	59	130
			33.0	39.7	67.6	70	65	135	69.4	70	67	137
			41.7	50.2	80.7	90	77	195	82.5	90	79	197
		MED	–	–	17.9	20	19	101	19.7	25	21	103
			13.9	16.7	38.8	40	38	118	40.6	45	40	120
			16.5	19.8	42.7	45	42	121	44.5	45	44	123
			27.8	33.4	59.7	60	57	134	61.5	70	59	136
			33.0	39.7	67.6	70	65	141	69.4	70	67	143
			41.7	50.2	80.7	90	77	201	82.5	90	79	203
		HIGH	–	–	19.7	25	21	123	21.5	25	23	125
			13.9	16.7	40.6	45	40	140	42.4	45	42	142
			16.5	19.8	44.5	45	44	143	46.3	50	46	145
			27.8	33.4	61.5	70	59	156	63.3	70	61	158
			33.0	39.7	69.4	70	67	163	71.2	80	69	165
			41.7	50.2	82.5	90	79	223	84.3	90	81	225
	575–3–60	STD	–	–	13.5	15	14	77	17.3	20	19	81
			17.0	20.4	39.0	40	38	97	42.8	45	42	101
			34.0	40.9	64.6	70	61	118	68.4	70	66	122
		MED	–	–	13.1	15	14	81	16.9	20	18	85
			17.0	20.4	38.6	40	37	101	42.4	45	42	105
			34.0	40.9	64.2	70	61	122	68.0	70	65	126
		HIGH	–	–	13.9	20	15	92	17.7	20	19	96
			17.0	20.4	39.4	40	38	112	43.2	45	43	116
			34.0	40.9	65.0	70	62	133	68.8	70	66	137

See page 64 for Legend and Notes.

Table 62 – MCA/MOCP DETERMINATION WITHOUT C.O. OR UNPWRD C.O.

UNIT	NOM. V–PH–HZ	IFM TYPE	ELEC HTR		WITHOUT C.O. or UNPWR C.O.							
					WITHOUT P.E.				WITH P.E. (pwrd fr/unit)			
			Nom (kW)	FLA	MCA	MOCP	DISC. SIZE		MCA	MOCP	DISC. SIZE	
							FLA	LRA			FLA	LRA
50HCQD09	208/230–3–60	STD	–	–	45.1	60	47	225	48.9	60	52	229
			7.8/10.4	21.7/25.0	72.2/76.4	80/80	72/76	247/250	76.0/80.2	80/90	77/80	251/254
			12.0/16.0	33.4/38.5	86.9/93.2	90/100	86/92	258/264	90.7/97.0	100/100	90/96	262/268
			18.6/24.8	51.7/59.7	109.7/119.7	110/125	107/116	277/285	113.5/123.5	125/125	111/120	281/289
			24.0/32.0	66.7/77.0	128.5/141.4	150/150	124/136	292/302	132.3/145.2	150/150	128/140	296/306
			31.8/42.4	88.4/102.0	155.6/172.6	175/175	149/165	402/429	159.4/176.4	175/200	153/169	406/433
		MED	–	–	47.4	60	50	262	51.2	60	54	266
			7.8/10.4	21.7/25.0	74.5/78.7	80/80	75/79	284/287	78.3/82.5	80/90	79/83	288/291
			12.0/16.0	33.4/38.5	89.2/95.5	90/100	88/94	295/301	93.0/99.3	100/100	93/99	299/305
			18.6/24.8	51.7/59.7	112.0/122.0	125/125	109/119	314/322	115.8/125.8	125/150	114/123	318/326
			24.0/32.0	66.7/77.0	130.8/143.7	150/150	127/138	329/339	134.6/147.5	150/150	131/143	333/343
			31.8/42.4	88.4/102.0	157.9/174.9	175/175	152/167	439/466	161.7/178.7	175/200	156/172	443/470
		HIGH	–	–	49.9	60	53	279	53.7	60	57	283
			7.8/10.4	21.7/25.0	77.0/81.2	80/90	78/82	301/304	80.8/85.0	90/90	82/86	305/308
			12.0/16.0	33.4/38.5	91.7/98.0	100/100	91/97	312/318	95.5/101.8	100/110	96/101	316/322
			18.6/24.8	51.7/59.7	114.5/124.5	125/125	112/121	331/339	118.3/128.3	125/150	117/126	335/343
			24.0/32.0	66.7/77.0	133.3/146.2	150/150	129/141	346/356	137.1/150.0	150/150	134/146	350/360
			31.8/42.4	88.4/102.0	160.4/177.4	175/200	154/170	456/483	164.2/181.2	175/200	159/174	460/487
	460–3–60	STD	–	–	20.7	25	22	112	22.5	25	24	114
			13.9	16.7	41.5	45	41	129	43.3	45	43	131
			16.5	19.8	45.4	50	45	132	47.2	50	47	134
			27.8	33.4	62.4	70	60	145	64.2	70	62	147
			33.0	39.7	70.3	80	67	152	72.1	80	69	154
			41.7	50.2	83.4	90	79	212	85.2	90	82	214
		MED	–	–	21.5	25	23	131	23.3	30	25	133
			13.9	16.7	42.3	45	42	148	44.1	45	44	150
			16.5	19.8	46.2	50	45	151	48.0	50	47	153
			27.8	33.4	63.2	70	61	164	65.0	70	63	166
			33.0	39.7	71.1	80	68	171	72.9	80	70	173
			41.7	50.2	84.2	90	80	231	86.0	90	82	233
		HIGH	–	–	22.5	25	24	140	24.3	30	26	142
			13.9	16.7	43.3	45	43	157	45.1	50	45	159
			16.5	19.8	47.2	50	47	160	49.0	50	49	162
			27.8	33.4	64.2	70	62	173	66.0	70	64	175
			33.0	39.7	72.1	80	69	180	73.9	80	72	182
			41.7	50.2	85.2	90	82	240	87.0	90	84	242
	575–3–60	STD	–	–	16.3	20	17	97	20.1	25	22	101
			17.0	20.4	41.8	45	41	117	45.6	50	45	121
			34.0	40.9	67.4	70	64	138	71.2	80	69	142
		MED	–	–	17.1	20	18	108	20.9	25	22	112
			17.0	20.4	42.6	45	42	128	46.4	50	46	132
			34.0	40.9	68.2	70	65	149	72.0	80	69	153
		HIGH	–	–	17.1	20	18	108	20.9	25	22	112
			17.0	20.4	42.6	45	42	128	46.4	50	46	132
			34.0	40.9	68.2	70	65	149	72.0	80	69	153

See page 64 for Legend and Notes.

Table 63 – MCA/MOCP DETERMINATION WITHOUT C.O. OR UNPWRD C.O.

UNIT	NOM. V–PH–HZ	IFM TYPE	ELEC HTR		WITHOUT C.O. or UNPWR C.O.							
					WITHOUT P.E.				WITH P.E. (pwrd fr/unit)			
			NOM (kW)	FLA	MCA	MOCP	DISC. SIZE		MCA	MOCP	DISC. SIZE	
							FLA	LRA			FLA	LRA
50HCQD12	208/230–3–60	STD	–	–	45.2	60	47	262	49.0	60	52	266
			7.5/10.0	20.9/24.1	71.3/75.3	80/80	71/75	283/286	75.1/79.1	80/80	76/79	287/290
			12.4/16.5	34.4/39.7	88.2/94.8	90/100	87/93	296/302	92.0/98.6	100/100	91/97	300/306
			25.2/33.5	69.9/80.6	132.6/145.9	150/150	128/140	332/343	136.4/149.7	150/150	132/144	336/347
			32.7/43.5	90.7/104.7	158.6/176.1	175/200	152/168	443/471	162.4/179.9	175/200	156/172	447/475
			37.6/50.0	104.3/120.3	175.6/165.5	200/175	167/186	471/503	179.4/169.3	200/175	172/190	475/507
		MED	–	–	47.5	60	50	288	51.3	60	54	292
			7.5/10.0	20.9/24.1	73.6/77.6	80/80	74/78	309/312	77.4/81.4	80/90	78/82	313/316
			12.4/16.5	34.4/39.7	90.5/97.1	100/100	90/96	322/328	94.3/100.9	100/110	94/100	326/332
			25.2/33.5	69.9/80.6	134.9/148.2	150/150	130/143	358/369	138.7/152.0	150/175	135/147	362/373
			32.7/43.5	90.7/104.7	160.9/178.4	175/200	154/170	469/497	164.7/182.2	175/200	159/175	473/501
			37.6/50.0	104.3/120.3	177.9/167.8	200/175	170/188	497/529	181.7/171.6	200/200	174/193	501/533
		HIGH	–	–	57.3/55.0	70/60	61/59	316	61.1/58.8	70/70	65/63	320
			7.5/10.0	20.9/24.1	83.4/85.1	90/90	85/86	337/340	87.2/88.9	90/90	89/91	341/344
			12.4/16.5	34.4/39.7	100.3/104.6	110/110	101/104	350/356	104.1/108.4	110/110	105/109	354/360
			25.2/33.5	69.9/80.6	144.6/155.7	150/175	141/151	386/397	148.4/159.5	150/175	146/156	390/401
			32.7/43.5	90.7/104.7	170.6/185.9	175/200	165/179	497/525	174.4/189.7	175/200	170/183	501/529
			37.6/50.0	104.3/120.3	187.6/175.3	200/200	181/197	525/557	191.4/179.1	200/200	185/201	529/561
		HIGH High Eff.	–	–	61.5	80	65	324	65.3	80	69	328
			7.5/10.0	20.9/24.1	87.6/91.6	100/100	89/93	345/348	91.4/95.4	100/100	93/97	349/352
			12.4/16.5	34.4/39.7	104.5/111.1	110/125	104/111	358/364	108.3/114.9	110/125	109/115	362/368
			25.2/33.5	69.9/80.6	148.9/162.3	150/175	145/158	394/405	152.7/166.1	175/175	150/162	398/409
			32.7/43.5	90.7/104.7	174.9/192.4	175/200	169/185	505/533	178.7/196.2	200/200	174/190	509/537
			37.6/50.0	104.3/120.3	191.9/181.8	200/200	185/203	533/565	195.7/185.6	200/200	189/208	537/569
	460–3–60	STD	–	–	22.3	30	23	125	24.1	30	26	127
			10.0	12.0	37.3	40	37	137	39.1	40	39	139
			16.5	19.9	47.2	50	46	145	49.0	50	48	147
			33.5	40.3	72.7	80	70	165	74.5	80	72	167
			43.5	52.3	87.7	90	84	230	89.5	90	86	232
			50.0	60.2	82.5	90	93	245	84.3	90	95	247
		MED	–	–	23.1	30	24	138	24.9	30	26	140
			10.0	12.0	38.1	40	38	150	39.9	40	40	152
			16.5	19.9	48.0	50	47	158	49.8	50	49	160
			33.5	40.3	73.5	80	71	178	75.3	80	73	180
			43.5	52.3	88.5	90	85	243	90.3	100	87	245
			50.0	60.2	83.3	90	94	258	85.1	90	96	260
		HIGH	–	–	27.3	30	29	152	29.1	35	31	154
			10.0	12.0	42.3	45	43	164	44.1	45	45	166
			16.5	19.9	52.2	60	52	172	54.0	60	54	174
			33.5	40.3	77.7	80	76	192	79.5	80	78	194
			43.5	52.3	92.7	100	89	257	94.5	100	91	259
			50.0	60.2	87.5	90	98	272	89.3	100	101	274
		HIGH High Eff.	–	–	30.6	40	32	156	32.4	40	34	158
			10.0	12.0	45.6	50	46	168	47.4	50	48	170
			16.5	19.9	55.4	60	55	176	57.2	60	57	178
			33.5	40.3	80.9	90	79	196	82.7	90	81	198
			43.5	52.3	95.9	100	92	261	97.7	100	94	263
			50.0	60.2	90.8	100	101	276	92.6	100	104	278

Table 63 - MCA/MOCP DETERMINATION WITHOUT C.O. OR UNPWRD C.O. (Cont.)

UNIT	NOM. V–PH–HZ	IFM TYPE	ELEC HTR		WITHOUT C.O. or UNPWR C.O.							
					WITHOUT P.E.				WITH P.E. (pwrd fr/unit)			
			NOM (kW)	FLA	MCA	MOCP	DISC. SIZE		MCA	MOCP	DISC. SIZE	
							FLA	LRA			FLA	LRA
50HCQD12	575–3–60	STD	–	–	17.1	20	18	95	20.9	25	22	99
			10.0	9.6	29.1	30	29	105	32.9	35	33	109
			16.5	15.9	36.9	40	36	111	40.7	45	41	115
			33.5	32.2	57.3	60	55	127	61.1	70	59	131
			43.5	41.8	69.3	70	66	179	73.1	80	70	183
			50.0	48.1	65.2	70	73	191	69.0	80	78	195
		MED	–	–	17.9	20	19	106	21.7	25	23	110
			10.0	9.6	29.9	30	30	116	33.7	35	34	120
			16.5	15.9	37.7	40	37	122	41.5	45	42	126
			33.5	32.2	58.1	60	56	138	61.9	70	60	142
			43.5	41.8	70.1	80	67	190	73.9	80	71	194
			50.0	48.1	66.0	70	74	202	69.8	80	79	206
		HIGH	–	–	21.2	25	23	109	25.0	30	27	113
			10.0	9.6	33.2	35	34	119	37.0	40	38	123
			16.5	15.9	41.1	45	41	125	44.9	45	45	129
			33.5	32.2	61.5	70	60	141	65.3	70	64	145
			43.5	41.8	73.5	80	71	193	77.3	80	75	197
			50.0	48.1	69.3	80	78	205	73.1	80	82	209
		HIGH High Eff.	–	–	24.9	30	26	118	28.7	35	30	122
			10.0	9.6	36.9	40	37	128	40.7	45	41	132
			16.5	15.9	44.7	45	44	134	48.5	50	49	138
			33.5	32.2	65.1	70	63	150	68.9	70	67	154
			43.5	41.8	77.1	80	74	202	80.9	90	78	206
			50.0	48.1	73.0	80	81	214	76.8	80	86	218

See page 64 for Legend and Notes.

Table 64 – MCA/MOCP DETERMINATION WITH PWRD C.O.

UNIT	NOM. V–PH–HZ	IFM TYPE	ELEC HTR		WITH PWRD C.O.							
					WITHOUT P.E.				WITH P.E. (pwrd fr/unit)			
			Nom (kW)	FLA	MCA	MOCP	DISC. SIZE		MCA	MOCP	DISC. SIZE	
							FLA	LRA			FLA	LRA
50HCQA04	208/230–1–60	DD–STD	–	–	34.0	50	34	93	35.9	50	36	95
			3.3/4.4	15.9/18.3	53.8/56.8	60/60	53/55	109/111	55.7/58.7	60/60	55/58	111/113
			4.9/6.5	23.5/27.1	63.3/67.8	70/70	61/65	117/120	65.2/69.7	70/70	63/68	119/122
			6.5/8.7	31.4/36.3	73.2/79.3	80/80	70/76	124/129	75.1/81.2	80/90	73/78	126/131
			7.9/10.5	37.9/43.8	81.3/88.7	90/90	78/85	131/137	83.2/90.6	90/100	80/87	133/139
			9.8/13.0	46.9/54.2	92.6/101.7	100/110	88/97	187/201	94.5/103.6	100/110	90/99	189/203
	208/230–3–60	DD–STD	–	–	26.2	30	27	87	28.1	35	29	89
			3.3/4.4	9.2/10.6	37.7/39.5	45/45	38/39	96/98	39.6/41.4	45/45	40/42	98/100
			4.9/6.5	13.6/15.6	43.2/45.7	50/50	43/45	101/103	45.1/47.6	50/50	45/47	103/105
			6.5/8.7	18.1/20.9	48.8/52.3	50/60	48/51	105/108	50.7/54.2	60/60	50/53	107/110
			7.9/10.5	21.9/25.3	53.6/57.8	60/60	52/56	109/112	55.5/59.7	60/60	55/58	111/114
			12.0/16.0	33.4/38.5	68.0/74.3	70/80	66/71	120/126	69.9/76.2	70/80	68/74	122/128
		MED	–	–	24.0	30	25	99	25.9	30	27	101
			3.3/4.4	9.2/10.6	35.5/37.3	40/45	35/37	108/110	37.4/39.2	45/45	37/39	110/112
			4.9/6.5	13.6/15.6	41.0/43.5	45/50	40/43	113/115	42.9/45.4	45/50	42/45	115/117
			6.5/8.7	18.1/20.9	46.6/50.1	50/60	45/49	117/120	48.5/52.0	50/60	48/51	119/122
			7.9/10.5	21.9/25.3	51.4/55.6	60/60	50/54	121/124	53.3/57.5	60/60	52/56	123/126
			12.0/16.0	33.4/38.5	65.8/72.1	70/80	63/69	132/138	67.7/74.0	70/80	65/71	134/140
		HIGH	–	–	24.0	30	25	110	25.9	30	27	112
			3.3/4.4	9.2/10.6	35.5/37.3	40/45	35/37	119/121	37.4/39.2	45/45	37/39	121/123
			4.9/6.5	13.6/15.6	41.0/43.5	45/50	40/43	124/126	42.9/45.4	45/50	42/45	126/128
			6.5/8.7	18.1/20.9	46.6/50.1	50/60	45/49	128/131	48.5/52.0	50/60	48/51	130/133
			7.9/10.5	21.9/25.3	51.4/55.6	60/60	50/54	132/135	53.3/57.5	60/60	52/56	134/137
			12.0/16.0	33.4/38.5	65.8/72.1	70/80	63/69	143/149	67.7/74.0	70/80	65/71	145/151
	460–3–60	DD–STD	–	–	14.0	20	14	45	15.0	20	16	46
			6.0	7.2	23.0	25	23	52	24.0	25	24	53
			8.8	10.6	27.2	30	27	56	28.2	30	28	57
			11.5	13.8	31.2	35	30	59	32.2	35	31	60
			14.0	16.8	35.0	35	34	62	36.0	40	35	63
		MED	–	–	12.6	15	13	50	13.6	20	14	51
			6.0	7.2	21.6	25	21	57	22.6	25	22	58
			8.8	10.6	25.8	30	25	61	26.8	30	26	62
			11.5	13.8	29.8	30	29	64	30.8	35	30	65
			14.0	16.8	33.6	35	32	67	34.6	35	33	68
		HIGH	–	–	12.6	15	13	56	13.6	20	14	57
			6.0	7.2	21.6	25	21	63	22.6	25	22	64
			8.8	10.6	25.8	30	25	67	26.8	30	26	68
			11.5	13.8	29.8	30	29	70	30.8	35	30	71
			14.0	16.8	33.6	35	32	73	34.6	35	33	74
	575–3–60	DD–STD	–	–	11.0	15	12	44	12.9	15	14	46
		MED	–	–	9.4	15	10	47	11.3	15	12	49
		HIGH	–	–	9.0	15	9	51	10.9	15	11	53

See page 64 for Legend and Notes.

Table 65 – MCA/MOCP DETERMINATION WITH PWRD C.O.

UNIT	NOM. V–PH–HZ	IFM TYPE	ELEC HTR		WITH PWRD C.O.							
					WITHOUT P.E.				WITH P.E. (pwrd fr/unit)			
			Nom (kW)	FLA	MCA	MOCP	DISC. SIZE		MCA	MOCP	DISC. SIZE	
							FLA	LRA			FLA	LRA
50HCQA05	208/230–1–60	DD–STD	–	–	38.4	50	38	124	40.3	60	41	126
			3.3/4.4	15.9/18.3	58.2/61.2	60/70	57/59	140/142	60.1/63.1	70/70	59/62	142/144
			6.5/8.7	31.4/36.3	77.6/83.7	80/90	75/80	155/160	79.5/85.6	80/90	77/82	157/162
			9.8/13.0	46.9/54.2	97.0/106.1	100/110	92/101	218/232	98.9/108.0	100/110	95/103	220/234
			13.1/17.4	62.8/72.5	116.9/129.0	125/150	111/122	250/269	118.8/130.9	125/150	113/124	252/271
			15.8/21.0	75.8/87.5	133.1/147.7	150/150	126/139	276/299	135.0/149.6	150/150	128/141	278/301
	208/230–3–60	DD–STD	–	–	30.0	40	31	98	31.9	40	33	100
			4.9/6.5	13.6/15.6	47.0/49.5	50/50	46/49	112/114	48.9/51.4	50/60	49/51	114/116
			6.5/8.7	18.1/20.9	52.6/56.1	60/60	52/55	116/119	54.5/58.0	60/60	54/57	118/121
			12.0/16.0	33.4/38.5	71.7/78.1	80/80	69/75	131/137	73.6/80.0	80/90	71/77	133/139
			15.8/21.0	43.8/50.5	84.7/93.1	90/100	81/89	186/199	86.6/95.0	90/100	83/91	188/201
		MED	–	–	27.8	40	28	110	29.7	40	30	112
			4.9/6.5	13.6/15.6	44.8/47.3	50/50	44/46	124/126	46.7/49.2	50/50	46/48	126/128
			6.5/8.7	18.1/20.9	50.4/53.9	60/60	49/52	128/131	52.3/55.8	60/60	51/54	130/133
			12.0/16.0	33.4/38.5	69.5/75.9	70/80	67/72	143/149	71.4/77.8	80/80	69/75	145/151
			15.8/21.0	43.8/50.5	82.5/90.9	90/100	79/86	198/211	84.4/92.8	90/100	81/88	200/213
		HIGH	–	–	27.8	40	28	121	29.7	40	30	123
			4.9/6.5	13.6/15.6	44.8/47.3	50/50	44/46	135/137	46.7/49.2	50/50	46/48	137/139
			6.5/8.7	18.1/20.9	50.4/53.9	60/60	49/52	139/142	52.3/55.8	60/60	51/54	141/144
			12.0/16.0	33.4/38.5	69.5/75.9	70/80	67/72	154/160	71.4/77.8	80/80	69/75	156/162
			15.8/21.0	43.8/50.5	82.5/90.9	90/100	79/86	209/222	84.4/92.8	90/100	81/88	211/224
	460–3–60	DD–STD	–	–	14.6	20	15	49	15.6	20	16	50
			6.0	7.2	23.6	25	23	56	24.6	25	24	57
			11.5	13.8	31.9	35	31	63	32.9	35	32	64
			14.0	16.8	35.6	40	34	66	36.6	40	36	67
			23.0	27.7	49.3	50	47	104	50.3	60	48	105
		MED	–	–	13.2	15	13	54	14.2	20	15	55
			6.0	7.2	22.2	25	22	61	23.2	25	23	62
			11.5	13.8	30.5	35	29	68	31.5	35	30	69
			14.0	16.8	34.2	35	33	71	35.2	40	34	72
			23.0	27.7	47.9	50	45	109	48.9	50	46	110
		HIGH	–	–	13.2	15	13	60	14.2	20	15	61
			6.0	7.2	22.2	25	22	67	23.2	25	23	68
			11.5	13.8	30.5	35	29	74	31.5	35	30	75
			14.0	16.8	34.2	35	33	77	35.2	40	34	78
			23.0	27.7	47.9	50	45	115	48.9	50	46	116
	575–3–60	DD–STD	–	–	12.0	15	13	41	13.9	20	15	43
		MED	–	–	10.4	15	11	44	12.3	15	13	46
		HIGH	–	–	10.0	15	10	48	11.9	15	12	50

See page 64 for Legend and Notes.

Table 66 – MCA/MOCP DETERMINATION WITH PWRD C.O.

UNIT	NOM. V–PH–HZ	IFM TYPE	ELEC HTR		WITH PWRD C.O.							
					WITHOUT P.E.				WITH P.E. (pwrd fr/unit)			
			Nom (kW)	FLA	MCA	MOCP	DISC. SIZE		MCA	MOCP	DISC. SIZE	
							FLA	LRA			FLA	LRA
50HCQA06	208/230–1–60	DD–STD	–	–	44.9	60	44	149	46.8	60	47	151
			4.9/6.5	23.5/27.1	74.2/78.7	80/80	71/76	173/176	76.1/80.6	80/90	74/78	175/178
			6.5/8.7	31.4/36.3	84.1/90.2	100/100	81/86	180/185	86.0/92.1	100/100	83/88	182/187
			9.8/13.0	46.9/54.2	103.5/112.6	110/125	98/107	243/257	105.4/114.5	110/125	101/109	245/259
			13.1/17.4	62.8/72.5	123.4/135.5	125/150	117/128	275/294	125.3/137.4	150/150	119/130	277/296
			15.8/21.0	75.8/87.5	139.6/154.2	150/175	132/145	301/324	141.5/156.1	150/175	134/147	303/326
	208/230–3–60	DD–STD	–	–	33.5	45	34	125	35.4	50	36	127
			4.9/6.5	13.6/15.6	50.5/53.0	60/60	50/52	139/141	52.4/54.9	60/60	52/54	141/143
			7.9/10.5	21.9/25.3	60.9/65.1	70/70	59/63	147/150	62.8/67.0	70/70	61/65	149/152
			12.0/16.0	33.4/38.5	75.2/81.6	80/90	72/78	158/164	77.1/83.5	80/90	75/80	160/166
			15.8/21.0	43.8/50.5	88.2/96.6	90/100	84/92	213/226	90.1/98.5	100/100	86/94	215/228
			19.9/26.5	55.2/63.8	102.5/113.2	110/125	97/107	235/253	104.4/115.1	110/125	100/109	237/255
		MED	–	–	31.3	45	31	148	33.2	45	34	150
			4.9/6.5	13.6/15.6	48.3/50.8	60/60	47/49	162/164	50.2/52.7	60/60	49/52	164/166
			7.9/10.5	21.9/25.3	58.7/62.9	60/70	57/60	170/173	60.6/64.8	70/70	59/63	172/175
			12.0/16.0	33.4/38.5	73.0/79.4	80/80	70/76	181/187	74.9/81.3	80/90	72/78	183/189
			15.8/21.0	43.8/50.5	86.0/94.4	90/100	82/89	236/249	87.9/96.3	90/100	84/92	238/251
			19.9/26.5	55.2/63.8	100.3/111.0	110/125	95/105	258/276	102.2/112.9	110/125	97/107	260/278
		HIGH	–	–	33.6	45	34	174	35.5	50	36	176
			4.9/6.5	13.6/15.6	50.6/53.1	60/60	50/52	188/190	52.5/55.0	60/60	52/54	190/192
			7.9/10.5	21.9/25.3	61.0/65.2	70/70	59/63	196/199	62.9/67.1	70/70	61/65	198/201
			12.0/16.0	33.4/38.5	75.3/81.7	80/90	72/78	207/213	77.2/83.6	80/90	75/81	209/215
			15.8/21.0	43.8/50.5	88.3/96.7	90/100	84/92	262/275	90.2/98.6	100/100	87/94	264/277
			19.9/26.5	55.2/63.8	102.6/113.3	110/125	98/107	284/302	104.5/115.2	110/125	100/110	286/304
	460–3–60	DD–STD	–	–	15.8	20	16	60	16.8	20	17	61
			6.0	7.2	24.8	25	24	67	25.8	30	26	68
			11.5	13.8	33.0	35	32	74	34.0	35	33	75
			14.0	16.8	36.8	40	35	77	37.8	40	37	78
			23.0	27.7	50.4	60	48	115	51.4	60	49	116
			25.5	30.7	54.1	60	51	121	55.1	60	53	122
		MED	–	–	14.4	20	14	71	15.4	20	16	72
			6.0	7.2	23.4	25	23	78	24.4	25	24	79
			11.5	13.8	31.6	35	30	85	32.6	35	32	86
			14.0	16.8	35.4	40	34	88	36.4	40	35	89
			23.0	27.7	49.0	50	46	126	50.0	50	47	127
			25.5	30.7	52.7	60	50	132	53.7	60	51	133
		HIGH	–	–	15.2	20	15	84	16.2	20	17	85
			6.0	7.2	24.2	25	24	91	25.2	30	25	92
			11.5	13.8	32.4	35	31	98	33.4	35	32	99
			14.0	16.8	36.2	40	35	101	37.2	40	36	102
			23.0	27.7	49.8	50	47	139	50.8	60	48	140
			25.5	30.7	53.5	60	51	145	54.5	60	52	146
	575–3–60	DD–STD	–	–	12.9	15	13	48	14.8	20	16	50
		MED	–	–	10.9	15	11	55	12.8	15	13	57
		HIGH	–	–	11.7	15	12	66	13.6	15	14	68

See page 64 for Legend and Notes.

Table 67 – MCA/MOCP DETERMINATION WITH PWRD C.O.

UNIT	NOM. V–PH–HZ	IFM TYPE	ELEC HTR		WITH PWRD C.O.							
					NO P.E.				WITH P.E. (pwrd fr/unit)			
			Nom (kW)	FLA	MCA	MOCP	DISC. SIZE FLA	DISC. SIZE LRA	MCA	MOCP	DISC. SIZE FLA	DISC. SIZE LRA
50HCQA07	208/230–3–60	STD	–	–	36.8	50	37	153	40.6	50	41	157
			4.9/6.5	13.6/15.6	53.8/56.3	60/60	52/55	167/169	57.6/60.1	60/70	57/59	171/173
			7.8/10.4	21.7/25.0	63.9/68.0	70/80	62/66	175/178	67.7/71.8	80/80	66/70	179/182
			12.0/16.0	33.4/38.5	78.5/84.9	80/90	75/81	186/192	82.3/88.7	90/90	80/85	190/196
			15.8/21.0	43.8/50.5	91.5/99.9	100/100	87/95	241/254	95.3/103.7	100/110	92/99	245/258
			19.9/26.5	55.2/63.8	105.8/116.5	110/125	100/110	263/281	109.6/120.3	110/125	105/115	267/285
		MED	–	–	39.1	50	39	190	42.9	60	44	194
			4.9/6.5	13.6/15.6	56.1/58.6	60/60	55/57	204/206	59.9/62.4	70/70	59/62	208/210
			7.8/10.4	21.7/25.0	66.2/70.3	70/80	64/68	212/215	70.0/74.1	80/80	69/73	216/219
			12.0/16.0	33.4/38.5	80.8/87.2	90/90	78/84	223/229	84.6/91.0	90/100	82/88	227/233
			15.8/21.0	43.8/50.5	93.8/102.2	100/110	90/98	278/291	97.6/106.0	100/110	94/102	282/295
			19.9/26.5	55.2/63.8	108.1/118.8	110/125	103/113	300/318	111.9/122.6	125/125	107/117	304/322
		HIGH	–	–	46.6	60	48	216	50.4	60	52	220
			4.9/6.5	13.6/15.6	63.6/66.1	70/80	64/66	230/232	67.4/69.9	80/80	68/70	234/236
			7.8/10.4	21.7/25.0	73.7/77.8	80/80	73/77	238/241	77.5/81.6	80/90	77/81	242/245
			12.0/16.0	33.4/38.5	88.3/94.7	90/100	86/92	249/255	92.1/98.5	100/100	91/97	253/259
			15.8/21.0	43.8/50.5	101.3/109.7	110/110	98/106	304/317	105.1/113.5	110/125	103/111	308/321
			19.9/26.5	55.2/63.8	115.6/126.3	125/150	112/121	326/344	119.4/130.1	125/150	116/126	330/348
	460–3–60	STD	–	–	18.5	25	19	77	20.3	30	21	79
			6.0	7.2	27.5	30	27	84	29.3	30	29	86
			11.5	13.8	35.8	40	34	91	37.6	40	36	93
			14.0	16.8	39.5	45	38	94	41.3	45	40	96
			23.0	27.7	53.2	60	50	105	55.0	60	52	107
			25.5	30.7	56.9	60	54	108	58.7	60	56	110
		MED	–	–	19.3	25	19	96	21.1	30	22	98
			6.0	7.2	28.3	30	28	103	30.1	35	30	105
			11.5	13.8	36.6	40	35	110	38.4	40	37	112
			14.0	16.8	40.3	45	39	113	42.1	45	41	115
			23.0	27.7	54.0	60	51	124	55.8	60	53	126
			25.5	30.7	57.7	60	55	127	59.5	60	57	129
		HIGH	–	–	23.3	30	24	109	25.1	30	26	111
			6.0	7.2	32.3	40	32	116	34.1	40	34	118
			11.5	13.8	40.6	45	40	123	42.4	45	42	125
			14.0	16.8	44.3	45	43	126	46.1	50	45	128
			23.0	27.7	58.0	60	56	137	59.8	60	58	139
			25.5	30.7	61.7	70	59	140	63.5	70	61	142
	575–3–60	STD	–	–	14.6	20	15	63	18.4	25	19	67
		MED	–	–	15.0	20	15	78	18.8	25	19	82
		HIGH	–	–	17.8	25	18	92	21.6	25	23	96

See page 64 for Legend and Notes.

Table 68 – MCA/MOCP DETERMINATION WITH PWRD C.O.

UNIT	NOM. V–PH–HZ	IFM TYPE	ELEC HTR		WITH PWRD C.O.							
					NO P.E.				WITH P.E. (pwrd fr/unit)			
			Nom (kW)	FLA	MCA	MOCP	DISC. SIZE FLA	DISC. SIZE LRA	MCA	MOCP	DISC. SIZE FLA	DISC. SIZE LRA
50HCQD08	208/230–3–60	STD	–	–	42.5	50	45	196	46.3	50	49	200
			7.8/10.4	21.7/25.0	69.6/73.7	70/80	70/74	218/221	73.4/77.5	80/80	74/78	222/225
			12.0/16.0	33.4/38.5	84.2/90.6	90/100	83/89	229/235	88.0/94.4	90/100	88/94	233/239
			18.6/24.8	51.7/59.7	107.1/117.1	110/125	105/114	248/256	110.9/120.9	125/125	109/118	252/260
			24.0/32.0	66.7/77.0	125.9/138.7	150/150	122/134	263/273	129.7/142.5	150/150	126/138	267/277
			31.8/42.4	88.4/102.0	153.0/170.0	175/175	147/162	373/400	156.8/173.8	175/175	151/167	377/404
		MED	–	–	42.5	50	45	207	46.3	50	49	211
			7.8/10.4	21.7/25.0	69.6/73.7	70/80	70/74	229/232	73.4/77.5	80/80	74/78	233/236
			12.0/16.0	33.4/38.5	84.2/90.6	90/100	83/89	240/246	88.0/94.4	90/100	88/94	244/250
			18.6/24.8	51.7/59.7	107.1/117.1	110/125	105/114	259/267	110.9/120.9	125/125	109/118	263/271
			24.0/32.0	66.7/77.0	125.9/138.7	150/150	122/134	274/284	129.7/142.5	150/150	126/138	278/288
			31.8/42.4	88.4/102.0	153.0/170.0	175/175	147/162	384/411	156.8/173.8	175/175	151/167	388/415
		HIGH	–	–	47.3	60	51	250	51.1	60	55	254
			7.8/10.4	21.7/25.0	74.4/78.5	80/80	76/79	272/275	78.2/82.3	80/90	80/84	276/279
			12.0/16.0	33.4/38.5	89.0/95.4	90/100	89/95	283/289	92.8/99.2	100/100	93/99	287/293
			18.6/24.8	51.7/59.7	111.9/121.9	125/125	110/119	302/310	115.7/125.7	125/150	114/124	306/314
			24.0/32.0	66.7/77.0	130.7/143.5	150/150	127/139	317/327	134.5/147.3	150/150	132/144	321/331
			31.8/42.4	88.4/102.0	157.8/174.8	175/175	152/168	427/454	161.6/178.6	175/200	157/172	431/458
	460–3–60	STD	–	–	20.1	25	21	97	21.9	25	23	99
			13.9	16.7	41.0	45	41	114	42.8	45	43	116
			16.5	19.8	44.9	45	44	117	46.7	50	46	119
			27.8	33.4	61.9	70	60	130	63.7	70	62	132
			33.0	39.7	69.8	70	67	137	71.6	80	69	139
			41.7	50.2	82.9	90	79	197	84.7	90	81	199
		MED	–	–	20.1	25	21	103	21.9	25	23	105
			13.9	16.7	41.0	45	41	120	42.8	45	43	122
			16.5	19.8	44.9	45	44	123	46.7	50	46	125
			27.8	33.4	61.9	70	60	136	63.7	70	62	138
			33.0	39.7	69.8	70	67	143	71.6	80	69	145
			41.7	50.2	82.9	90	79	203	84.7	90	81	205
		HIGH	–	–	21.9	25	23	125	23.7	30	26	127
			13.9	16.7	42.8	45	43	142	44.6	45	45	144
			16.5	19.8	46.7	50	46	145	48.5	50	48	147
			27.8	33.4	63.7	70	62	158	65.5	70	64	160
			33.0	39.7	71.6	80	69	165	73.4	80	71	167
			41.7	50.2	84.7	90	81	225	86.5	90	83	227
	575–3–60	STD	–	–	15.2	20	16	79	19.0	25	21	83
			17.0	20.4	40.7	45	40	99	44.5	45	44	103
			34.0	40.9	66.3	70	63	120	70.1	80	68	124
		MED	–	–	14.8	20	16	83	18.6	20	20	87
			17.0	20.4	40.3	45	39	103	44.1	45	44	107
			34.0	40.9	65.9	70	63	124	69.7	70	67	128
		HIGH	–	–	15.6	20	17	94	19.4	25	21	98
			17.0	20.4	41.1	45	40	114	44.9	45	45	118
			34.0	40.9	66.7	70	64	135	70.5	80	68	139

See page 64 for Legend and Notes.

Table 69 – MCA/MOCP DETERMINATION WITH PWRD C.O.

UNIT	NOM. V–PH–HZ	IFM TYPE	ELEC HTR		WITH PWRD C.O.							
					NO P.E.				WITH P.E. (pwrd fr/unit)			
			Nom (kW)	FLA	MCA	MOCP	DISC. SIZE		MCA	MOCP	DISC. SIZE	
							FLA	LRA			FLA	LRA
50HCQD09	208/230–3–60	STD	–	–	49.9	60	53	230	53.7	60	57	234
			7.8/10.4	21.7/25.0	77.0/81.2	80/90	78/82	252/255	80.8/85.0	90/90	82/86	256/259
			12.0/16.0	33.4/38.5	91.7/98.0	100/100	91/97	263/269	95.5/101.8	100/110	96/101	267/273
			18.6/24.8	51.7/59.7	114.5/124.5	125/125	112/121	282/290	118.3/128.3	125/150	117/126	286/294
			24.0/32.0	66.7/77.0	133.3/146.2	150/150	129/141	297/307	137.1/150.0	150/150	134/146	301/311
			31.8/42.4	88.4/102.0	160.4/177.4	175/200	154/170	407/434	164.2/181.2	175/200	159/174	411/438
		MED	–	–	52.2	60	55	267	56.0	70	60	271
			7.8/10.4	21.7/25.0	79.3/83.5	80/90	80/84	289/292	83.1/87.3	90/90	85/89	293/296
			12.0/16.0	33.4/38.5	94.0/100.3	100/110	94/100	300/306	97.8/104.1	100/110	98/104	304/310
			18.6/24.8	51.7/59.7	116.8/126.8	125/150	115/124	319/327	120.6/130.6	125/150	119/128	323/331
			24.0/32.0	66.7/77.0	135.6/148.5	150/150	132/144	334/344	139.4/152.3	150/175	137/148	338/348
			31.8/42.4	88.4/102.0	162.7/179.7	175/200	157/173	444/471	166.5/183.5	175/200	161/177	448/475
		HIGH	–	–	54.7	60	58	284	58.5	70	63	288
			7.8/10.4	21.7/25.0	81.8/86.0	90/90	83/87	306/309	85.6/89.8	90/90	88/91	310/313
			12.0/16.0	33.4/38.5	96.5/102.8	100/110	97/103	317/323	100.3/106.6	110/110	101/107	321/327
			18.6/24.8	51.7/59.7	119.3/129.3	125/150	118/127	336/344	123.1/133.1	125/150	122/131	340/348
			24.0/32.0	66.7/77.0	138.1/151.0	150/175	135/147	351/361	141.9/154.8	150/175	139/151	355/365
			31.8/42.4	88.4/102.0	165.2/182.2	175/200	160/176	461/488	169.0/186.0	175/200	164/180	465/492
	460–3–60	STD	–	–	22.9	25	24	114	24.7	30	26	116
			13.9	16.7	43.7	45	43	131	45.5	50	46	133
			16.5	19.8	47.6	50	47	134	49.4	50	49	136
			27.8	33.4	64.6	70	63	147	66.4	70	65	149
			33.0	39.7	72.5	80	70	154	74.3	80	72	156
			41.7	50.2	85.6	90	82	214	87.4	90	84	216
		MED	–	–	23.7	30	25	133	25.5	30	27	135
			13.9	16.7	44.5	45	44	150	46.3	50	46	152
			16.5	19.8	48.4	50	48	153	50.2	60	50	155
			27.8	33.4	65.4	70	64	166	67.2	70	66	168
			33.0	39.7	73.3	80	71	173	75.1	80	73	175
			41.7	50.2	86.4	90	83	233	88.2	90	85	235
		HIGH	–	–	24.7	30	26	142	26.5	30	28	144
			13.9	16.7	45.5	50	46	159	47.3	50	48	161
			16.5	19.8	49.4	50	49	162	51.2	60	51	164
			27.8	33.4	66.4	70	65	175	68.2	70	67	177
			33.0	39.7	74.3	80	72	182	76.1	80	74	184
			41.7	50.2	87.4	90	84	242	89.2	90	86	244
	575–3–60	STD	–	–	18.0	20	19	99	21.8	25	23	103
			17.0	20.4	43.5	45	43	119	47.3	50	47	123
			34.0	40.9	69.1	70	66	140	72.9	80	70	144
		MED	–	–	18.8	25	20	110	22.6	25	24	114
			17.0	20.4	44.3	45	43	130	48.1	50	48	134
			34.0	40.9	69.9	70	67	151	73.7	80	71	155
		HIGH	–	–	18.8	25	20	110	22.6	25	24	114
			17.0	20.4	44.3	45	43	130	48.1	50	48	134
			34.0	40.9	69.9	70	67	151	73.7	80	71	155

See page 64 for Legend and Notes.

Table 70 – MCA/MOCP DETERMINATION WITH PWRD C.O.

UNIT	NOM. V–PH–HZ	IFM TYPE	ELEC HTR		WITH PWRD C.O.							
					WITHOUT P.E.				WITH P.E. (pwrd fr/unit)			
			Nom (kW)	FLA	MCA	MOCP	DISC. SIZE		MCA	MOCP	DISC. SIZE	
							FLA	LRA			FLA	LRA
50HCQD12	208/230–3–60	STD	–	–	50.0	60	53	267	53.8	60	57	271
			7.5/10.0	20.9/24.1	76.1/80.1	80/90	77/81	288/291	79.9/83.9	80/90	81/85	292/295
			12.4/16.5	34.4/39.7	93.0/99.6	100/100	92/99	301/307	96.8/103.4	100/110	97/103	305/311
			25.2/33.5	69.9/80.6	137.4/150.7	150/175	133/146	337/348	141.2/154.5	150/175	138/150	341/352
			32.7/43.5	90.7/104.7	163.4/180.9	175/200	157/173	448/476	167.2/184.7	175/200	162/178	452/480
			37.6/50.0	104.3/120.3	180.4/170.3	200/175	173/191	476/508	184.2/174.1	200/200	177/196	480/512
		MED	–	–	52.3	60	56	293	56.1	70	60	297
			7.5/10.0	20.9/24.1	78.4/82.4	80/90	80/83	314/317	82.2/86.2	90/90	84/88	318/321
			12.4/16.5	34.4/39.7	95.3/101.9	100/110	95/101	327/333	99.1/105.7	100/110	99/106	331/337
			25.2/33.5	69.9/80.6	139.7/153.0	150/175	136/148	363/374	143.5/156.8	150/175	140/153	367/378
			32.7/43.5	90.7/104.7	165.7/183.2	175/200	160/176	474/502	169.5/187.0	175/200	164/180	478/506
			37.6/50.0	104.3/120.3	182.7/172.6	200/200	175/194	502/534	186.5/176.4	200/200	180/198	506/538
		HIGH	–	–	62.1/59.8	70/70	66/64	321	65.9/63.6	80/70	71/69	325
			7.5/10.0	20.9/24.1	88.2/89.9	90/90	91/92	342/345	92.0/93.7	100/100	95/96	346/349
			12.4/16.5	34.4/39.7	105.1/109.4	110/110	106/110	355/361	108.9/113.2	110/125	110/114	359/365
			25.2/33.5	69.9/80.6	149.4/160.5	150/175	147/157	391/402	153.2/164.3	175/175	151/161	395/406
			32.7/43.5	90.7/104.7	175.4/190.7	200/200	171/185	502/530	179.2/194.5	200/200	175/189	506/534
			37.6/50.0	104.3/120.3	192.4/180.1	200/200	186/203	530/562	196.2/183.9	200/200	191/207	534/566
		HIGH High Eff.	–	–	66.3	80	70	329	70.1	80	75	333
			7.5/10.0	20.9/24.1	92.4/96.4	100/100	94/98	350/353	96.2/100.2	100/110	99/102	354/357
			12.4/16.5	34.4/39.7	109.3/115.9	110/125	110/116	363/369	113.1/119.7	125/125	114/120	367/373
			25.2/33.5	69.9/80.6	153.7/167.1	175/175	151/163	399/410	157.5/170.9	175/175	155/167	403/414
			32.7/43.5	90.7/104.7	179.7/197.2	200/200	175/191	510/538	183.5/201.0	200/225	179/195	514/542
			37.6/50.0	104.3/120.3	196.7/186.6	200/200	190/209	538/570	200.5/190.4	225/200	195/213	542/574
	460–3–60	STD	–	–	24.5	30	26	127	26.3	30	28	129
			10.0	12.0	39.5	40	40	139	41.3	45	42	141
			16.5	19.9	49.4	50	49	147	51.2	60	51	149
			33.5	40.3	74.9	80	72	167	76.7	80	74	169
			43.5	52.3	89.9	90	86	232	91.7	100	88	234
			50.0	60.2	84.7	90	95	247	86.5	90	97	249
		MED	–	–	25.3	30	27	140	27.1	30	29	142
			10.0	12.0	40.3	45	41	152	42.1	45	43	154
			16.5	19.9	50.2	60	50	160	52.0	60	52	162
			33.5	40.3	75.7	80	73	180	77.5	80	75	182
			43.5	52.3	90.7	100	87	245	92.5	100	89	247
			50.0	60.2	85.5	90	96	260	87.3	90	98	262
		HIGH	–	–	29.5	35	32	154	31.3	35	34	156
			10.0	12.0	44.5	45	46	166	46.3	50	48	168
			16.5	19.9	54.4	60	55	174	56.2	60	57	176
			33.5	40.3	79.9	80	78	194	81.7	90	80	196
			43.5	52.3	94.9	100	92	259	96.7	100	94	261
			50.0	60.2	89.7	100	101	274	91.5	100	103	276
		HIGH High Eff.	–	–	32.8	40	35	158	34.6	40	37	160
			10.0	12.0	47.8	50	49	170	49.6	50	51	172
			16.5	19.9	57.6	60	58	178	59.4	60	60	180
			33.5	40.3	83.1	90	81	198	84.9	90	83	200
			43.5	52.3	98.1	100	95	263	99.9	100	97	265
			50.0	60.2	93.0	100	104	278	94.8	100	106	280

Table 70 - MCA/MOCP DETERMINATION WITH PWRD C.O. (Cont.)

UNIT	NOM. V–PH–HZ	IFM TYPE	ELEC HTR		WITH PWRD C.O.							
					WITHOUT P.E.				WITH P.E. (pwrd fr/unit)			
			Nom (kW)	FLA	MCA	MOCP	DISC. SIZE		MCA	MOCP	DISC. SIZE	
							FLA	LRA			FLA	LRA
50HCQD12	575–3–60	STD	–	–	18.8	25	20	97	22.6	25	24	101
			10.0	9.6	30.8	35	31	107	34.6	35	35	111
			16.5	15.9	38.6	40	38	113	42.4	45	43	117
			33.5	32.2	59.0	60	57	129	62.8	70	61	133
			43.5	41.8	71.0	80	68	181	74.8	80	72	185
			50.0	48.1	66.9	70	75	193	70.7	80	80	197
		MED	–	–	19.6	25	21	108	23.4	25	25	112
			10.0	9.6	31.6	35	32	118	35.4	40	36	122
			16.5	15.9	39.4	40	39	124	43.2	45	43	128
			33.5	32.2	59.8	60	58	140	63.6	70	62	144
			43.5	41.8	71.8	80	69	192	75.6	80	73	196
			50.0	48.1	67.7	70	76	204	71.5	80	81	208
		HIGH	–	–	22.9	25	25	111	26.7	30	29	115
			10.0	9.6	34.9	35	36	121	38.7	40	40	125
			16.5	15.9	42.8	45	43	127	46.6	50	47	131
			33.5	32.2	63.2	70	62	143	67.0	70	66	147
			43.5	41.8	75.2	80	73	195	79.0	80	77	199
			50.0	48.1	71.0	80	80	207	74.8	80	84	211
		HIGH High Eff.	–	–	26.6	30	28	120	30.4	35	32	124
			10.0	9.6	38.6	45	39	130	42.4	45	43	134
			16.5	15.9	46.4	50	46	136	50.2	60	51	140
			33.5	32.2	66.8	70	65	152	70.6	80	69	156
			43.5	41.8	78.8	80	76	204	82.6	90	80	208
			50.0	48.1	74.7	80	83	216	78.5	90	88	220

See page 64 for Legend and Notes.

TYPICAL WIRING DIAGRAMS

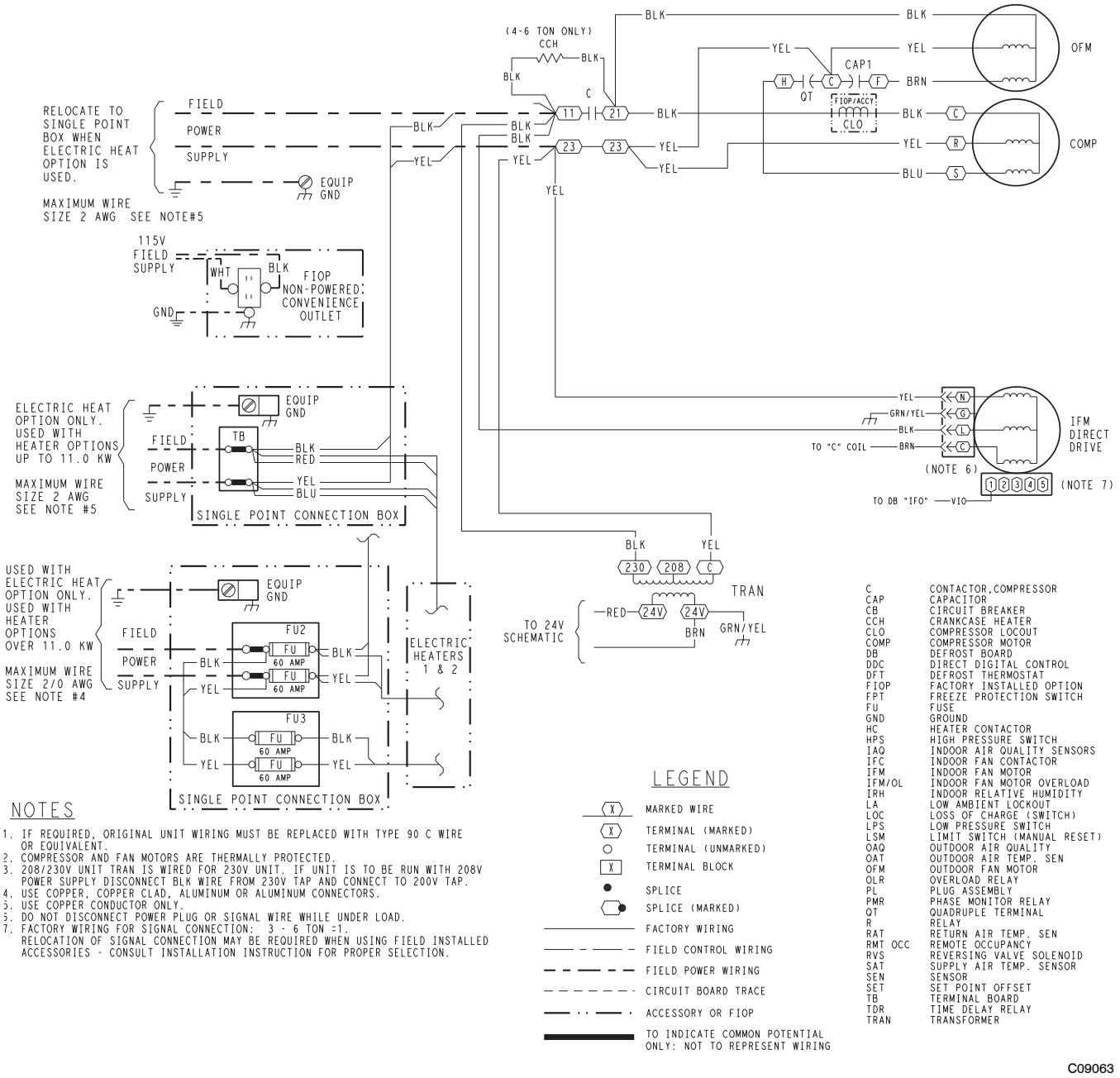

NOTES

1. IF REQUIRED, ORIGINAL UNIT WIRING MUST BE REPLACED WITH TYPE 90 C WIRE OR EQUIVALENT.
2. COMPRESSOR AND FAN MOTORS ARE THERMALLY PROTECTED.
3. 208/230V UNIT TRAN IS WIRED FOR 230V UNIT. IF UNIT IS TO BE RUN WITH 208V POWER SUPPLY DISCONNECT BLK WIRE FROM 230V TAP AND CONNECT TO 200V TAP.
4. USE COPPER, COPPER CLAD, ALUMINUM OR ALUMINUM CONNECTORS.
5. USE COPPER CONDUCTOR ONLY.
6. DO NOT DISCONNECT POWER PLUG OR SIGNAL WIRE WHILE UNDER LOAD.
7. FACTORY WIRING FOR SIGNAL CONNECTION: 3 - 6 TON =1. RELOCATION OF SIGNAL CONNECTION MAY BE REQUIRED WHEN USING FIELD INSTALLED ACCESSORIES - CONSULT INSTALLATION INSTRUCTION FOR PROPER SELECTION.

Fig. 28 - 1-Stage Cooling Typical Power Diagram

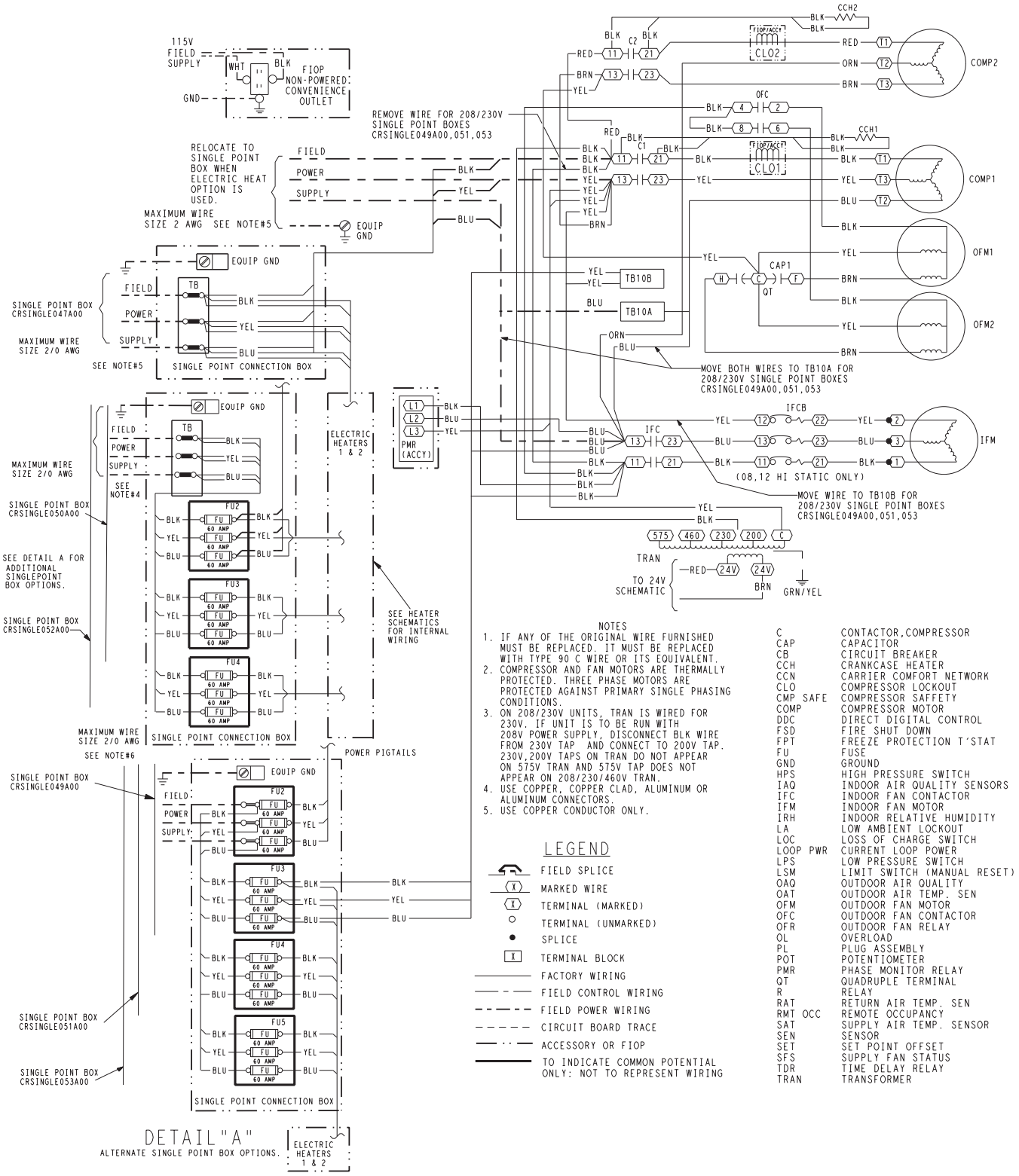

NOTES

1. IF ANY OF THE ORIGINAL WIRE FURNISHED MUST BE REPLACED. IT MUST BE REPLACED WITH TYPE 90 C WIRE OR ITS EQUIVALENT.
2. COMPRESSOR AND FAN MOTORS ARE THERMALLY PROTECTED. THREE PHASE MOTORS ARE PROTECTED AGAINST PRIMARY SINGLE PHASING CONDITIONS.
3. ON 208/230V UNITS, TRAN IS WIRED FOR 230V. IF UNIT IS TO BE RUN WITH 208V POWER SUPPLY, DISCONNECT BLK WIRE FROM 230V TAP AND CONNECT TO 200V TAP. 230V,200V TAPS ON TRAN DO NOT APPEAR ON 575V TRAN AND 575V TAP DOES NOT APPEAR ON 208/230/460V TRAN.
4. USE COPPER, COPPER CLAD, ALUMINUM OR ALUMINUM CONNECTORS.
5. USE COPPER CONDUCTOR ONLY.

LEGEND

- FIELD SPLICE
- MARKED WIRE
- TERMINAL (MARKED)
- TERMINAL (UNMARKED)
- SPLICE
- TERMINAL BLOCK
- FACTORY WIRING
- FIELD CONTROL WIRING
- FIELD POWER WIRING
- CIRCUIT BOARD TRACE
- ACCESSORY OR FIOP
- TO INDICATE COMMON POTENTIAL ONLY: NOT TO REPRESENT WIRING

C	CONTACTOR,COMPRESSOR
CAP	CAPACITOR
CB	CIRCUIT BREAKER
CCH	CRANKCASE HEATER
CCN	CARRIER COMFORT NETWORK
CLO	COMPRESSOR LOCKOUT
CMP SAFE	COMPRESSOR SAFFETY
COMP	COMPRESSOR MOTOR
DDC	DIRECT DIGITAL CONTROL
FSD	FIRE SHUT DOWN
FPT	FREEZE PROTECTION T´STAT
FU	FUSE
GND	GROUND
HPS	HIGH PRESSURE SWITCH
IAQ	INDOOR AIR QUALITY SENSORS
IFC	INDOOR FAN CONTACTOR
IFM	INDOOR FAN MOTOR
IRH	INDOOR RELATIVE HUMIDITY
LA	LOW AMBIENT LOCKOUT
LOC	LOSS OF CHARGE SWITCH
LOOP PWR	CURRENT LOOP POWER
LPS	LOW PRESSURE SWITCH
LSM	LIMIT SWITCH (MANUAL RESET)
OAQ	OUTDOOR AIR QUALITY
OAT	OUTDOOR AIR TEMP. SEN
OFM	OUTDOOR FAN MOTOR
OFC	OUTDOOR FAN CONTACTOR
OFR	OUTDOOR FAN RELAY
OL	OVERLOAD
PL	PLUG ASSEMBLY
POT	POTENTIOMETER
PMR	PHASE MONITOR RELAY
QT	QUADRUPLE TERMINAL
R	RELAY
RAT	RETURN AIR TEMP. SEN
RMT OCC	REMOTE OCCUPANCY
SAT	SUPPLY AIR TEMP. SENSOR
SEN	SENSOR
SET	SET POINT OFFSET
SFS	SUPPLY FAN STATUS
TDR	TIME DELAY RELAY
TRAN	TRANSFORMER

Fig. 29 – 2-Stage Cooling Typical Power Diagram

TYPICAL WIRING DIAGRAMS (cont.)

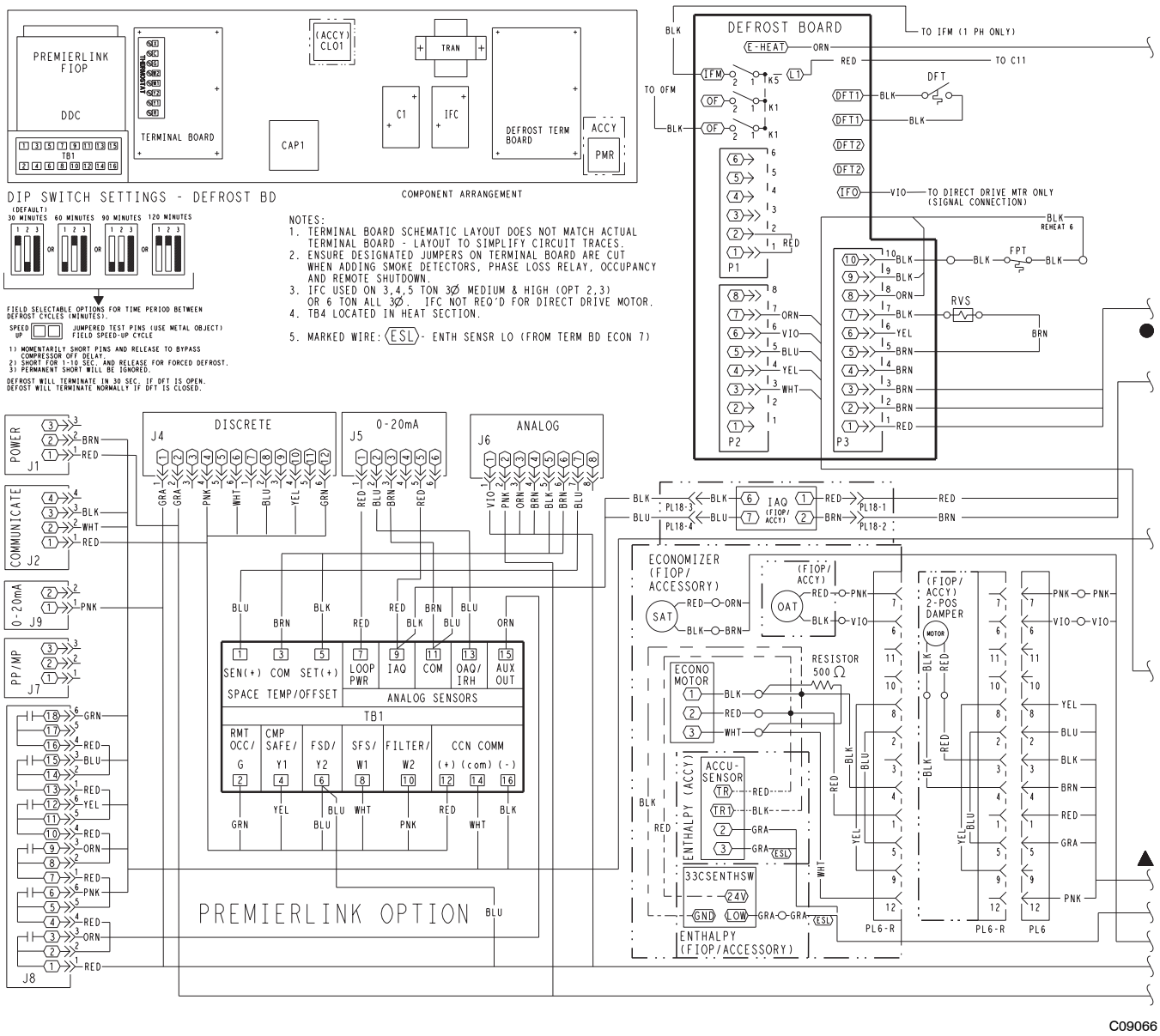

Fig. 30 - PremierLink Option Diagram

TYPICAL WIRING DIAGRAMS (cont.)

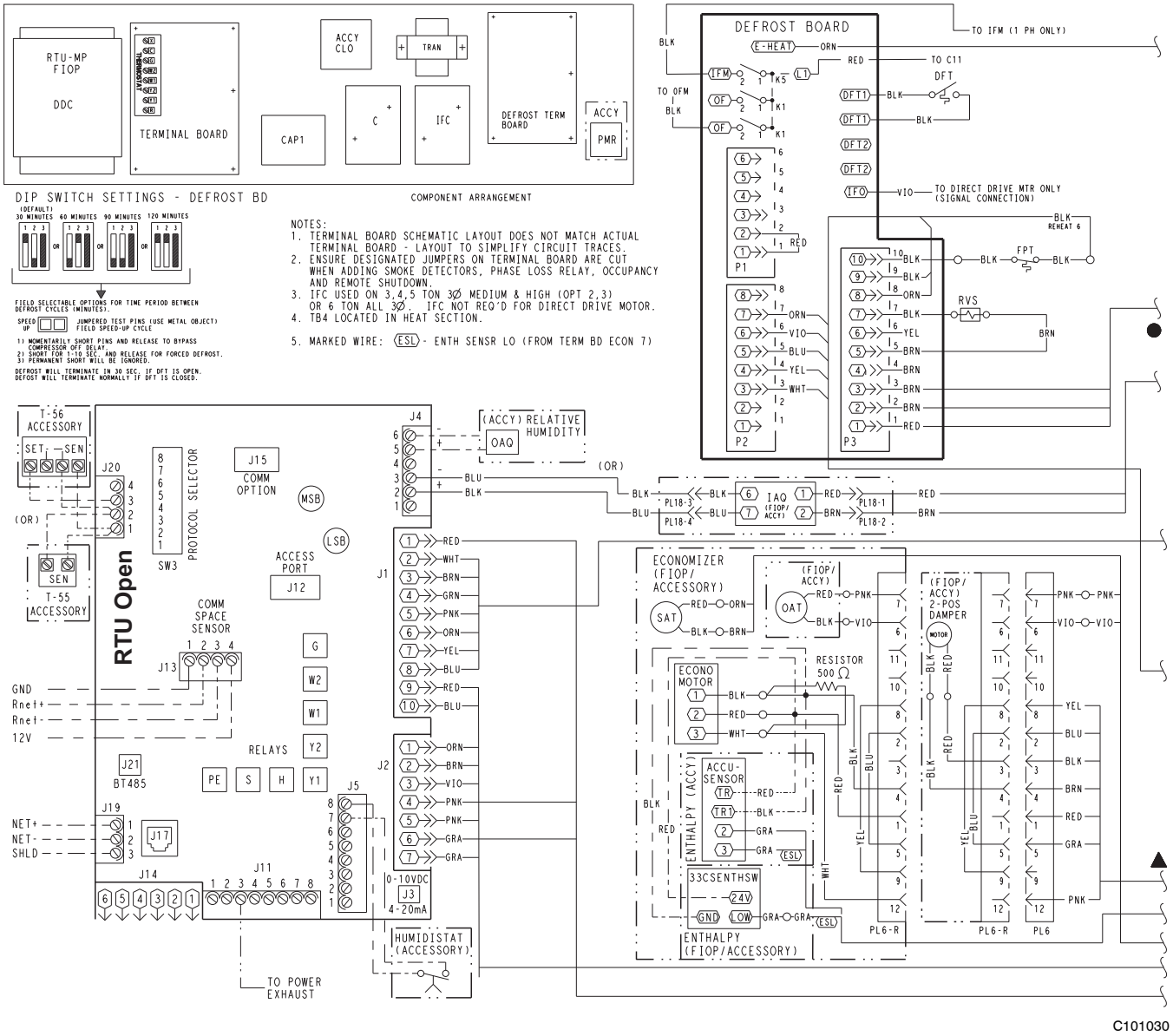

Fig. 31 - Multi-Protocol Option Diagram

50HCQ

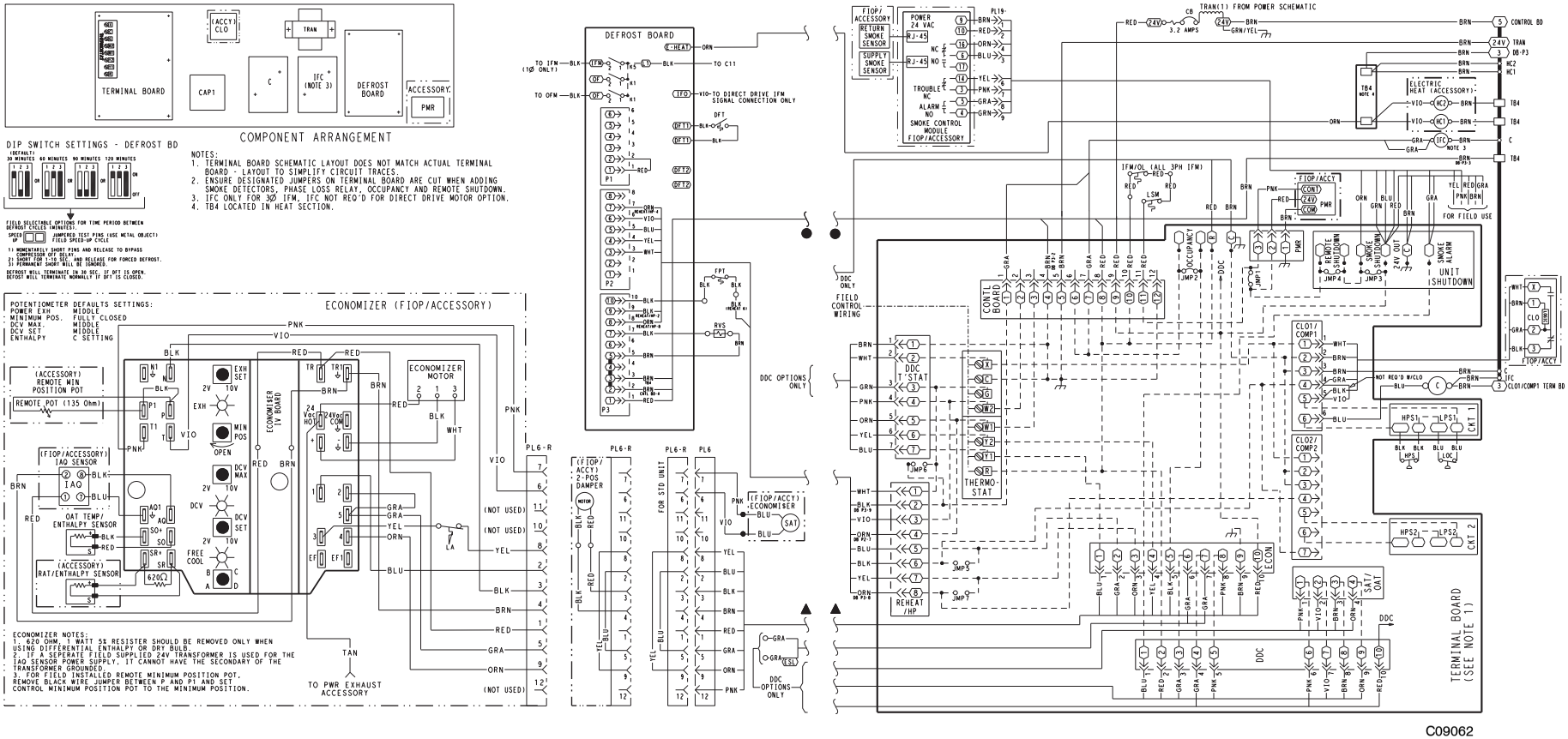

Fig. 32 - 1-Stage Typical Wiring Diagram

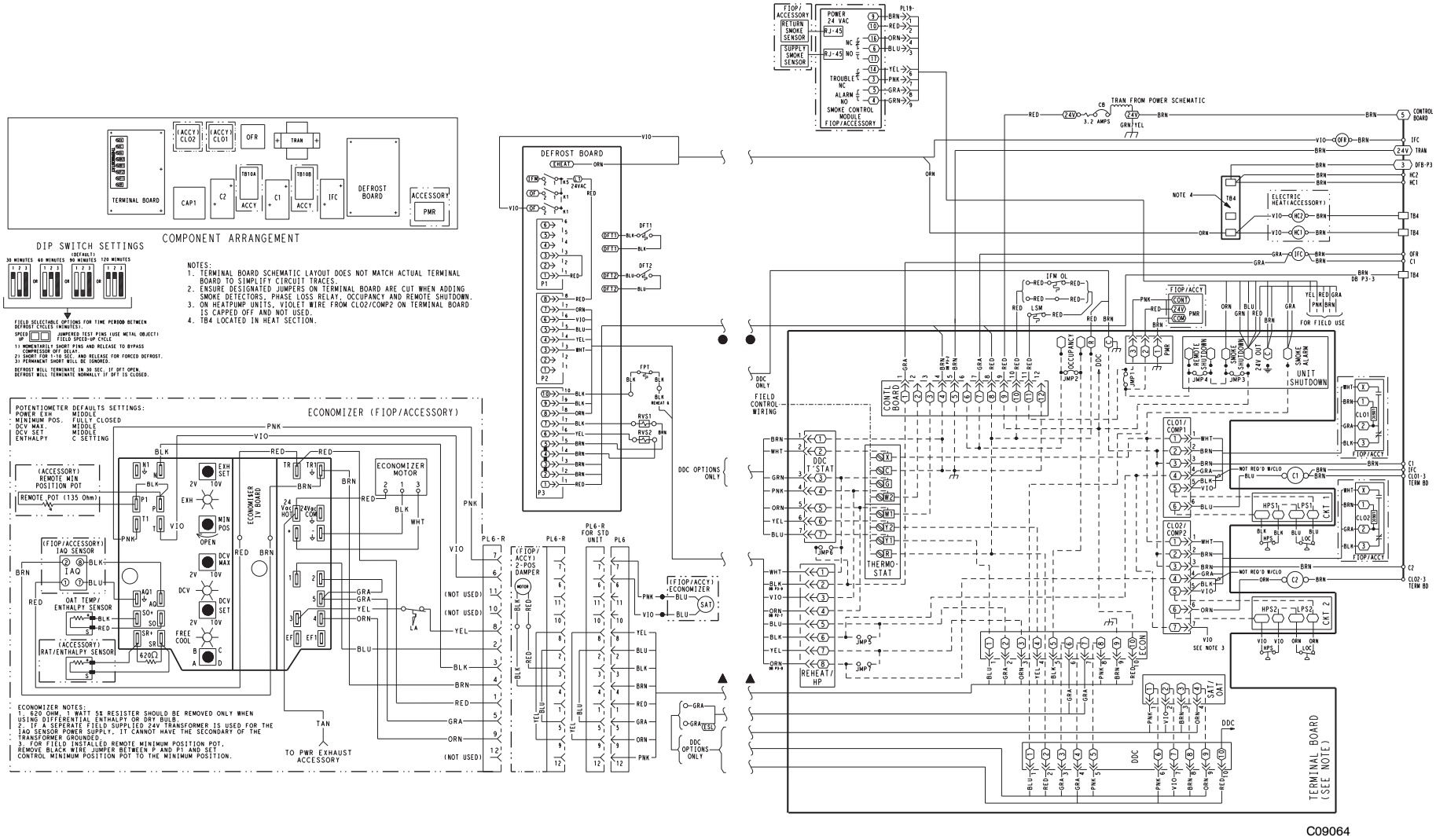

Fig. 33 - 2-Stage Typical Wiring Diagram

Cooling, unit without economizer

When thermostat calls for cooling, terminals G and Y1 are energized. The indoor fan contactor (IFC), reversing valve solenoid (RVS) and compressor contactor are energized and indoor fan motor, compressor, and outdoor fan starts. The outdoor fan motor runs continuously while unit is cooling.

Two-stage models: If Stage 1 cooling does not satisfy the space load, the space temperature will rise until thermostat calls for Stage 2 cooling (Y2 closes). Defrost Board activates Stage 2 Compressor. Reversing valve 2 switches to Cooling position. Compressor 2 contactor is energized; Compressor 2 starts and Circuit 2 operates in Cooling mode.

When Cooling Stage 2 is satisfied, thermostat Y2 opens. Compressor 2 contactor is de-energized; Compressor 2 stops. Reversing Valve 2 remains energized.

When Cooling Stage 1 is satisfied, thermostat Y1 opens. Compressor 1 contactor is de-energized; Compressor 1 stops. Outdoor fan relay is de-energized; outdoor fans stop. After the Fan Delay period, the Indoor fan contactor is de-energized; indoor fan stops (unless Continuous Fan operation has been selected). Reversing Valve 1 remains energized.

Reversing valve solenoids are energized in Cooling modes. Each solenoid will remain energized until the next Heating mode is initiated for this circuit.

Heating, unit without economizer

Upon a request for heating from the space thermostat, terminal W1 will be energized with 24V. The IFC, outdoor fan contactor (OFC), C1, and C2 will be energized. The indoor fan, outdoor fans, and compressor no. 1, and compressor no. 2 are energized and reversing valves are de-energized and switch position.

If the space temperature continues to fall while W1 is energized, W2 will be energized with 24V, and the heater contactor(s) (HC) will be energized, which will energize the electric heater(s).

When the space thermostat is satisfied, W2 will be de-energized first, and the electric heater(s) will be de-energized.

Upon a further rise in space temperature, W1 will be de-energized.

Two compressor models: When the thermostat calls for heating, terminal W1 is energized. Defrost Board de-energizes both reversing valve solenoids and reversing valves move to Heating position. The indoor fan contactor is energized; indoor fan motor starts. Outdoor fan relay is energized; both outdoor fan motors run. Compressor contactors C1 and C2 are energized; both refrigeration circuits operate in Heating mode.

If Stage 1 heating does not satisfy the space load, the space temperature will fall until thermostat calls for Stage 2 heating (W2 closes). Terminal W2 is energized. Defrost Board issues an output at EHEAT. Heater contactor 1 and heater contactor 2 (if installed) are energized; all electric heaters are energized.

When space heating load is partially satisfied, thermostat terminal W2 is de-energized; heater contactors are de-energized and all electric heat is terminated. Stage 1 heating continues.

When the space heating load is fully satisfied, thermostat terminal W1 is also de-energized.

Reversing valve solenoids remain de-energized until the next call for Cooling mode is initiated.

Cooling, unit with EconoMi$er IV

When free cooling is not available, the compressors will be controlled by the zone thermostat. When free cooling is available, the outdoor air damper is modulated by the EconoMi$er IV control to provide a 50 to 55°F (10° to 13°C) mixed air temperature into the zone. As the mixed air temperature fluctuates above 55 or below 50°F (13° to 10°C), the dampers will be modulated (open or close) to bring the mixed air temperature back within control.

If mechanical cooling is utilized with free cooling, the outdoor air damper will maintain its current position at the time the compressor is started. If the increase in cooling capacity causes the mixed air temperature to drop below 45°F (7°C), then the outdoor air damper position will be decreased to the minimum position. If the mixed air temperature continues to fall, the outdoor air damper will close. Control returns to normal once the mixed air temperature rises above 48°F (9°C).

If optional power exhaust is installed, as the outdoor air damper opens and closes, the power exhaust fans will be energized and de-energized.

If field-installed accessory CO_2 sensors are connected to the EconoMi$er IV control, a demand controlled ventilation strategy will begin to operate. As the CO_2 level in the zone increases above the CO_2 setpoint, the minimum position of the damper will be increased proportionally. As the CO_2 level decreases because of the increase in fresh air, the outdoor air damper will be proportionally closed.

For EconoMi$er IV operation, there must be a thermostat call for the fan (G). If the unit is occupied and the fan is on, the damper will operate at minimum position. Otherwise, the damper will be closed.

When the EconoMi$er IV control is in the occupied mode and a call for cooling exists (Y1 on the thermostat), the control will first check for indoor fan operation. If the fan is not on, then cooling will not be activated. If the fan is on, then the control will open the EconoMi$er IV damper to the minimum position.

On the initial power to the EconoMi$er IV control, it will take the damper up to $2^1/_2$ minutes before it begins to position itself. Any change in damper position will take up to 30 seconds to initiate. Damper movement from full closed to full open (or vice versa) will take between $1^1/_2$ and $2^1/_2$ minutes.

If free cooling can be used as determined from the appropriate changeover command (switch, dry bulb, enthalpy curve, differential dry bulb, or differential enthalpy), then the control will modulate the dampers open to maintain the mixed air temperature setpoint at 50° to 55°F (10° to 13°C).

If there is a further demand for cooling (cooling second stage — Y2 is energized), then the control will bring on compressor stage 1 to maintain the mixed air temperature setpoint. The EconoMi$er IV damper will be open at maximum position. EconoMi$er IV operation is limited to a single compressor.

Heating, unit with EconoMi$er

When the room temperature calls for heat through terminal W1, the indoor (evaporator) fan contactor (IFC) and heater contactor no. 1 (HC1) are energized and the reversing valve(s) de-energize and switches position. On units equipped for 2 stages of heat, when additional heat is needed, heater contactor no. 2 is energized through W2. The economizer damper moves to the minimum position. When the thermostat is satisfied, the damper moves to the fully closed position.

Cooling, unit with EconoMi$er2, PremierLink control and a thermostat

When free cooling is not available, the compressors will be controlled by the PremierLink control in response to the Y1 and Y2 inputs from the thermostat.

The PremierLink control will use the following information to determine if free cooling is available:

- Indoor fan has been on for at least 30 seconds.
- The SPT, SAT, and OAT inputs must have valid readings.
- OAT must be less than 75°F (24°C).
- OAT must be less than SPT.
- Enthalpy must be LOW (may be jumpered if an enthalpy sensor not available).
- Economizer position is NOT forced.

Pre-cooling occurs when there is no call from the thermostat except G. Pre-cooling is defined as the economizer modulates to provide 70°F (21°C) supply air.

When free cooling is available the PremierLink control will control the compressors, energize the reversing valve(s) and economizer to provide a supply air temperature determined to meet the Y1 and Y2 calls from the thermostat.

If optional power exhaust is installed, as the outdoor air damper opens and closes, the power exhaust fans will be energized and de-energized.

If field-installed accessory CO_2 sensors are connected to the PremierLink control, a PID controlled demand ventilation strategy will begin to operate. As the CO_2 level in the zone increases above the CO_2 setpoint, the minimum position of the damper will be increased proportionally. As the CO_2 level decreases because of the increase in fresh air, the outdoor air damper will be proportionally closed.

Heating, unit with EconoMi$er2, PremierLink control and a thermostat

When the thermostat calls for heating, terminal W1 is energized. The PremierLink control will move the economizer damper to the minimum position if there is a call for G and closed if there is a call for W1 without G. In order to prevent thermostat from short cycling, the unit is locked into the heating mode for at least 10 minutes when W1 is energized. The reversing valve solenoid(s) de-energizes and switches position.

On units equipped for two stages of heat, when additional heat is needed, W2 is energized and the electric heat (if used) comes on. When the thermostat is satisfied and W1 is de-energized, the IFM stops.

Cooling, unit with EconoMi$er2, PremierLink control and a room sensor

When free cooling is not available, the compressors will be controlled by the PremierLink controller using a PID Error reduction calculation.

The PremierLink controller will use the following information to determine if free cooling is available:

- Indoor fan has been on for at least 30 seconds.
- The SPT, SAT, and OAT inputs must have valid readings.
- OAT must be less than 75°F (24°C).
- OAT must be less than SPT.
- Enthalpy must be LOW (may be jumpered if an enthalpy sensor is not available).
- Economizer position is NOT forced.

When free cooling is available, the outdoor air damper is positioned through the use of a Proportional Integral (PID) control process to provide a calculated supply air temperature into the zone. The supply air will maintain the space temperature between the heating and cooling setpoints.

The PremierLink control will integrate the compressors stages with the economizer based on similar logic as the three routines listed in the previous section. The SASP will float up and down based on the error reduction calculations that compare space temperature and space setpoint. The reversing valves will be energized.

If an optional power exhaust is installed, as the outdoor air damper opens and closes, the power exhaust fans will be energized and de-energized.

If field- installed accessory CO_2 sensors are connected to the PremierLink control, a PID-controlled demand ventilation strategy will begin to operate. As the CO_2 level in the zone increases above the CO_2 setpoint, the minimum position of the damper will be increased proportionally. As the CO_2 level decreases because of the increase in fresh air, the outdoor air damper will be proportionally closed.

Heating, unit with EconoMi$er2, PremierLink control and a room sensor

Every 40 seconds the controller will calculate the required heat stages (maximum of 3) to maintain Supply Air Temperature (SAT) if the following qualifying conditions are met:

- Indoor fan has been on for at least 30 seconds.
- COOL mode is not active.
- OCCUPIED, TEMP.COMPENSATED START or HEAT mode is active.
- SAT reading is available.
- Fire shutdown mode is not active.

If all of the above conditions are met, the number of heat stages is calculated; otherwise the required number of heat stages will be set to 0.

If the PremierLink controller determines that heat stages are required, the economizer damper will be moved to minimum position if occupied and closed if unoccupied.

Defrost

When the temperature of the outdoor coil drops below 28°F (-2°C) as sensed by the defrost thermostat (DFT2) and the defrost timer is at the end of a timed period (adjustable at 30, 60, 90 or 120 minutes), reversing valve solenoids (RVS1 and RVS2) are energized and the OFC is de-energized. This switches the position of the reversing valves and shuts off the outdoor fan. The electric heaters (if installed) will be energized.

The unit continues to defrost until the coil temperature as measured by DFT2 reaches 65°F (18°C), or the duration of defrost cycle completes a 10-minute period.

During the Defrost mode, if circuit 1 defrosts first, RVS1 will oscillate between Heating and Cooling modes until the Defrost mode is complete.

At the end of the defrost cycle, the electric heaters (if installed) will be de-energized; the reversing valves switch and the outdoor fan motor will be energized. The unit will now operate in the Heating mode.

If the space thermostat is satisfied during a defrost cycle, the unit will continue in the Defrost mode until the time or temperature constraints are satisfied.

Automatic changeover

When the system selection switch is set at AUTO. position, unit automatically changes from heating operation to cooling operation when the temperature of the conditioned space rises to the cooling level setting. When the temperature of the conditioned space falls to the heating level setting, unit automatically changes from cooling to heating operation (with a 3°F deadband in between).

Continuous air circulation

Turn unit power on. Set system control at OFF position. Set fan switch at ON position. The indoor fan contactor is energized through the thermostat switch and the indoor fan runs continuously.

Emergency heat

When the switch is on (thermostat is set to the EM HT position), compressor circuit and outdoor thermostats are bypassed, and the second stage of thermostat energizes the indoor blower and the electric resistance heaters.

GUIDE SPECIFICATIONS - 50HCQ*04-12

Note about this specification:

Carrier created this specification in "Masterformat" as published by the Construction Specification Institute. Please feel free to copy this specification directly into your building specifications.

Rooftop Packaged Heat Pump

HVAC Guide Specifications

Size Range: **3 to 10 Nominal Tons**

Section **Description**

23 06 80 Schedules for Decentralized HVAC Equipment

23 06 80.13 Decentralized Unitary HVAC Equipment Schedule

23 06 80.13.A. Rooftop unit schedule

1. Schedule is per the project specification requirements.

23 07 16 HVAC Equipment Insulation

23 07 16.13 Decentralized, Rooftop Units:

23 07 16.13.A. Evaporator fan compartment:

1. Interior cabinet surfaces shall be insulated with a minimum 1/2-in. thick, minimum 1 1/2 lb density, flexible fiberglass insulation bonded with a phenolic binder, neoprene coated on the air side.
2. Insulation and adhesive shall meet NFPA 90A requirements for flame spread and smoke generation.

23 07 16.13.B. Electric heat compartment:

1. Aluminum foil-faced fiberglass insulation shall be used.
2. Insulation and adhesive shall meet NFPA 90A requirements for flame spread and smoke generation.

23 09 13 Instrumentation and Control Devices for HVAC

23 09 13.23 Sensors and Transmitters

23 09 13.23.A. Thermostats

1. Thermostat must
   a. have capability to energize 2 different stages of cooling, and 2 different stages of heating.
   b. include capability for occupancy scheduling.

23 09 23 Direct-digital Control system for HVAC

23 09 23.13 Decentralized, Rooftop Units:

23 09 23.13.A. PremierLink controller

1. Shall be ASHRAE 62-2001 compliant.
2. Shall accept 18-32VAC input power.
3. Shall have an operating temperature range from -40°F (-40°C) to 158°F (70°C), 10% - 95% RH (non-condensing).
4. Shall include an integrated economizer controller to support an economizer with 4 to 20 mA actuator input and no microprocessor controller.
5. Controller shall accept the following inputs: space temperature, setpoint adjustment, outdoor air temperature, indoor air quality, outdoor air quality, indoor relative humidity, compressor lock-out, fire shutdown, enthalpy, fan status, remote time clock/door switch.
6. Shall accept a CO_2 sensor in the conditioned space, and be Demand Control Ventilation (DCV) ready.
7. Shall provide the following outputs: Economizer, fan, cooling stage 1, cooling stage 2, heat stage 1, heat stage 2, heat stage 3/ exhaust/ reversing valve/ dehumidify/ occupied.
8. Unit shall provide surge protection for the controller through a circuit breaker.
9. Shall be Internet capable, and communicate at a Baud rate of 38.4K or faster
10. Shall have an LED display independently showing the status of activity on the communication bus, and processor operation.
11. Shall include an EIA-485 protocol communication port, an access port for connection of either a computer or a Carrier technician tool, an EIA-485 port for network communication to intelligent space sensors and displays, and a port to connect an optional LonWorks plug-in communications card.
12. Shall have built-in Carrier Comfort Network (CCN) protocol, and be compatible with other CCN devices, including ComfortLink and ComfortVIEW controllers.

13. Shall have built-in support for Carrier technician tool.
14. Software upgrades will be accomplished by local download. Software upgrades through chip replacements are not allowed.
15. Shall be shock resistant in all planes to 5G peak, 11ms during operation, and 100G peak, 11ms during storage.
16. Shall be vibration resistant in all planes to 1.5G @ 20-300 Hz.
17. Shall support a bus length of 4000 ft max, 60 devices per 1000 ft section, and 1 RS-485 repeater per 1000ft sections.

23 09 23.13.B. Multi-protocol, direct digital controller:

1. Shall be ASHRAE 62-2001 compliant.
2. Shall accept 18-30VAC, 50-60Hz, and consumer 15VA or less power.
3. Shall have an operating temperature range from -40°F (-40°C) to 130°F (54°C), 10% - 90% RH (non-condensing).
4. Shall include built-in protocol for BACNET (MS/TP and PTP modes), Modbus (RTU and ASCII), Johnson N2 and LonWorks. LonWorks Echelon processor required for all Lon applications shall be contained in separate communication board.
5. Shall allow access of up to 62 network variables (SNVT). Shall be compatible with all open controllers
6. Baud rate Controller shall be selectable using a dipswitch.
7. Shall have an LED display independently showing the status of serial communication, running, errors, power, all digital outputs, and all analog inputs.
8. Shall accept the following inputs: space temperature, setpoint adjustment, outdoor air temperature, indoor air quality, outdoor air quality, compressor lock-out, fire shutdown, enthalpy switch, and fan status/filter status/humidity/remote occupancy.
9. Shall provide the following outputs: economizer, fan, cooling stage 1, cooling stage 2, heat stage 1, heat stage 2, heat stage 3/ exhaust/ reversing valve.
10. Shall have built-in surge protection circuitry through solid state polyswitches. Polyswitches shall be used on incoming power and network connections. Polyswitches will return to normal when the “trip” condition clears.
11. Shall have a battery back-up capable of a minimum of 10,000 hours of data and time clock retention during power outages.
12. Shall have built-in support for Carrier technician tool.
13. Shall include an EIA-485 protocol communication port, an access port for connection of either a computer or a Carrier technician tool, an EIA-485 port for network communication to intelligent space sensors and displays, and a port to connect an optional LonWorks communications card.
14. Software upgrades will be accomplished by either local or remote download. No software upgrades through chip replacements are allowed.

23 09 33 Electric and Electronic Control System for HVAC

23 09 33.13 Decentralized, Rooftop Units:

23 09 33.13.A. General:

1. Shall be complete with self-contained low voltage control circuit protected by a resettable circuit breaker on the 24-v transformer side. Transformer shall have 75VA capability.
2. Shall utilize color-coded wiring.
3. Shall include a central control terminal board to conveniently and safely provide connection points for vital control functions such as: smoke detectors, phase monitor, economizer, thermostat, DDC control options, loss of charge, freeze switch, high pressure switches.
4. Unit shall include a minimum of one 8-pin screw terminal connection board for connection of control wiring.
5. Shall include integrated defrost system to prevent excessive frost accumulation during heating duty, and shall be controlled as follows:
   a. Defrost shall be initiated on the basis of time and coil temperature.
   b. A 30,60,90,120 minute timer shall activate the defrost cycle only if the coil temperature is low enough to indicate a heavy frost condition.
   c. Defrost cycle shall terminate when defrost thermostat is satisfied and shall have a positive termination time of 10 minutes.
6. Defrost system shall also include:
   a. Defrost Cycle Indicator LED.
   b. Dip switch selectable defrost time between 30,60,90 and 120 minutes. Factory set at 30 minutes.
   c. Molded plug connection to insure proper connection.

23 09 33.23.B. Safeties:

1. Compressor overtemperature, overcurrent.
2. Loss of charge switch.
   a. Units with 2 compressors shall have different sized connectors for the circuit 1 and circuit 2 loss of charge switches. They shall physically prevent the cross-wiring of the safety switches between circuits 1 and 2.
   b. Loss of charge switch shall use different color wire than the high pressure switch. The purpose is to assist the installer and service technician to correctly wire and or troubleshoot the rooftop unit.
3. High pressure switch.
   a. Units with 2 compressors shall have different sized connectors for the circuit 1 and circuit 2 high pressure switches. They shall physically prevent the cross-wiring of the safety switches between circuits 1 and 2.
   b. High pressure switch shall use different color wire than the low pressure switch. The purpose is to assist the installer and service technician to correctly wire and or troubleshoot the rooftop unit.
4. Freeze protection thermostat, evaporator coil.
5. Automatic reset, motor thermal overload protector.

23 09 93 Sequence of Operations for HVAC Controls

23 09 93.13 Decentralized, Rooftop Units:

23 09 93.13 INSERT SEQUENCE OF OPERATION

23 40 13 Panel Air Filters

23 40 13.13 Decentralized, Rooftop Units:

23 40 13.13.A. Standard filter section

1. Shall consist of factory-installed, low velocity, throwaway 2-in. thick fiberglass filters of commercially available sizes.
2. Unit shall use only one filter size. Multiple sizes are not acceptable.
3. Filters shall be accessible through an access panel with “no-tool” removal as described in the unit cabinet section of this specification (23 81 19.13.H).

23 81 19 Self-Contained Air Conditioners

23 81 19.13 Small-Capacity Self-Contained Air Conditioners (50HCQ*04-12)

23 81 19.13.A. General

1. Outdoor, rooftop mounted, electrically controlled, heating and cooling unit utilizing a(n) hermetic scroll compressor(s) for cooling duty and heat pump for heating duty.
2. Factory assembled, single piece heating and cooling rooftop unit. Contained within the unit enclosure shall be all factory wiring, piping, controls, and special features required prior to field startup.
3. Unit shall use environmentally safe, Puron refrigerant.
4. Unit shall be installed in accordance with the manufacturer’s instructions.
5. Unit must be selected and installed in compliance with local, state, and federal codes.

23 81 19.13.B. Quality Assurance

1. Unit meets ASHRAE 90.1 minimum efficiency requirements.
2. Unit shall be rated in accordance with AHRI Standards 210/240 and 340/360.
3. Unit shall be designed to conform to ASHRAE 15, 2001.
4. Unit shall be UL-tested and certified in accordance with ANSI Z21.47 Standards and UL-listed and certified under Canadian standards as a total package for safety requirements.
5. Insulation and adhesive shall meet NFPA 90A requirements for flame spread and smoke generation.
6. Unit casing shall be capable of withstanding 500-hour salt spray exposure per ASTM B117 (scribed specimen).
7. Unit casing shall be capable of withstanding Federal Test Method Standard No. 141 (Method 6061) 5000-hour salt spray.
8. Unit shall be designed in accordance with ISO 9001, and shall be manufactured in a facility registered by ISO 9001.
9. Roof curb shall be designed to conform to NRCA Standards.
10. Unit shall be subjected to a completely automated run test on the assembly line. The data for each unit will be stored at the factory, and must be available upon request.
11. Unit shall be designed in accordance with UL Standard 1995, including tested to withstand rain.
12. Unit shall be constructed to prevent intrusion of snow and tested to prevent snow intrusion into the control box up to 40 mph.
13. Unit shake tested to assurance level 1, ASTM D4169 to ensure shipping reliability.

14. High Efficient Motors listed shall meet Section 313 of the Energy Independence and Security Act of 2007 (EISA 2007).

23 81 19.13.C. Delivery, Storage, and Handling

1. Unit shall be stored and handled per manufacturer's recommendations.
2. Lifted by crane requires either shipping top panel or spreader bars.
3. Unit shall only be stored or positioned in the upright position.

23 81 19.13.D. Project Conditions

1. As specified in the contract.

23 81 19.13.E. Project Conditions

1. As specified in the contract.

23 81 19.13.F. Operating Characteristics

1. Unit shall be capable of starting and running at 125°F (52°C) ambient outdoor temperature, meeting maximum load criteria of AHRI Standard 210/240 or 340/360 at ± 10% voltage.
2. Compressor with standard controls shall be capable of operation down to 30°F (-1°C), ambient outdoor temperatures. Accessory Low Ambient controls are available if mechanically cooling at ambient temperatures below 30°F (-1°C).
3. Unit shall be capable of simultaneous heating duty and defrost cycle operation when using accessory electric heaters.
4. Unit shall discharge supply air vertically or horizontally as shown on contract drawings.
5. Unit shall be factory configured for vertical supply & return configurations.
6. Unit shall be field convertible from vertical to horizontal configuration. No special kits on 04-09 sizes. Size 12 model shall require a supply duct kit for field installation.
7. Unit shall be capable of mixed operation: vertical supply with horizontal return or horizontal supply with vertical return.

23 81 19.13.G. Electrical Requirements

1. Main power supply voltage, phase, and frequency must match those required by the manufacturer.

23 81 19.13.H. Unit Cabinet

1. Unit cabinet shall be constructed of galvanized steel, and shall be bonderized and coated with a prepainted baked enamel finish on all externally exposed surfaces.
2. Unit cabinet exterior paint shall be: film thickness, (dry) 0.003 inches minimum, gloss (per ASTM D523, 60°F): 60, Hardness: H-2H Pencil hardness.
3. Evaporator fan compartment interior cabinet insulation shall conform to AHRI Standards 210/240 or 340/360 minimum exterior sweat criteria. Interior surfaces shall be insulated with a minimum 1/2-in. thick, 1 lb density, flexible fiberglass insulation, neoprene coated on the air side. Aluminum foil-faced fiberglass insulation shall be used in the heat compartment.
4. Base of unit shall have a minimum of three locations for thru-the-base electrical connections (factory-installed or field-installed), standard.
5. Base Rail
   a. Unit shall have base rails on a minimum of 2 sides.
   b. Holes shall be provided in the base rails for rigging shackles to facilitate maneuvering and overhead rigging.
   c. Holes shall be provided in the base rail for moving the rooftop by fork truck.
   d. Base rail shall be a minimum of 16 gauge thickness.
6. Condensate pan and connections:
   a. Shall be a sloped condensate drain pan made of a non-corrosive material.
   b. Shall comply with ASHRAE Standard 62.
   c. Shall use a 3/4-in. -14 NPT drain connection, possible either through the bottom or end of the drain pan. Connection shall be made per manufacturer's recommendations.
7. Top panel:
   a. Shall be a single piece on all 04 to 09 models. Two piece on size 12 models.
8. Electrical Connections
   a. All unit power wiring shall enter unit cabinet at a single, factory prepared, knockout location.
   b. Thru-the-base capability
      (1.) Standard unit shall have a thru-the-base electrical location(s) using a raised, embossed portion of the unit basepan.

(2.) Optional, factory approved, watertight connection method must be used for thru-the-base electrical connections.

(3.) No basepan penetration, other than those authorized by the manufacturer, is permitted.

9. Component access panels (standard)
   a. Cabinet panels shall be easily removable for servicing.
   b. Unit shall have one factory-installed, tool-less, removable, filter access panel.
   c. Panels covering control box, indoor fan, indoor fan motor, gas components (where applicable), and compressors shall have molded composite handles.
   d. Handles shall be UV modified, composite. permanently attached, and recessed into the panel.
   e. Screws on the vertical portion of all removable access panels shall engage into heat resistant, molded composite collars.
   f. Collars shall be removable and easily replaceable using manufacturer recommended parts.

23 81 19.13.I. N/A

23 81 19.13.J. Coils

1. Standard Aluminum/Copper Coils: on all models.
   a. Standard evaporator and condenser coils shall have aluminum lanced plate fins mechanically bonded to seamless internally grooved copper tubes with all joints brazed.
   b. Evaporator coils shall be leak tested to 150 psig. Pressure tested to 450 psig and qualified to UL 1995 burst test at 1775 psig.
   c. Condenser coils shall be leak tested to 150 psig. Pressure tested to 650 psig and qualified to UL 1995 burst test at 1980 psig.
2. Optional Pre-coated aluminum fin condenser coils: on all models.
   a. Shall have a durable epoxy-phenolic coating to provide protection in mildly corrosive coastal environments.
   b. Coating shall be applied to the aluminum fin stock prior to the fin stamping process to create an inert barrier between the aluminum fin and copper tube.
   c. Epoxy-phenolic barrier shall minimize galvanic action between dissimilar metals.
3. Optional Copper-fin evaporator and condenser coils: on all models.
   a. Shall be constructed of copper fins mechanically bonded to copper tubes and copper tube sheets.
   b. Galvanized steel tube sheets shall not be acceptable.
   c. A polymer strip shall prevent coil assembly from contacting the sheet metal coil pan to minimize potential for galvanic corrosion between coil and pan.
4. Optional E-coated aluminum-fin evaporator and condenser coils: on all models.
   a. Shall have a flexible epoxy polymer coating uniformly applied to all coil surface areas without material bridging between fins.
   b. Coating process shall ensure complete coil encapsulation of tubes, fins and headers.
   c. Color shall be high gloss black with gloss per ASTM D523-89.
   d. Uniform dry film thickness from 0.8 to 1.2 mil on all surface areas including fin edges.
   e. Superior hardness characteristics of 2H per ASTM D3363-92A and cross-hatch adhesion of 4B-5B per ASTM D3359-93.
   f. Impact resistance shall be up to 160 in.-lb (ASTM D2794-93).
   g. Humidity and water immersion resistance shall be up to minimum 1000 and 250 hours respectively (ASTM D2247-92 and ASTM D870-92).
   h. Corrosion durability shall be confirmed through testing to be no less than 1000 hours salt spray per ASTM B117-90.

23 81 19.13.K. Refrigerant Components

1. Refrigerant circuit shall include the following control, safety, and maintenance features:
   a. Thermostatic Expansion Valve (TXV) shall help provide optimum performance across the entire operating range. Shall contain removable power element to allow change out of power element and bulb without removing the valve body.
   b. Refrigerant filter drier on each refrigerant circuit.
   c. Service gauge connections on suction and discharge lines.
   d. Pressure gauge access through a specially designed access port in the top panel of the unit.
   e. Suction line accumulator to provide protection in all operating modes from cooling, heating and reverse cycle switching. Standard on each refrigerant circuit.
2. There shall be gauge line access port in the top of the rooftop, covered by a black, removable plug.

a. The plug shall be easy to remove and replace.
b. When the plug is removed, the gauge access port shall enable maintenance personnel to route their pressure gauge lines.
c. This gauge access port shall facilitate correct and accurate condenser pressure readings by enabling the reading with the compressor access panel on.
d. The plug shall be made of a leak proof, UV-resistant, composite material.

3. Compressors
   a. Unit shall use one fully hermetic, scroll compressor for each independent refrigeration circuit.
   b. Models shall be available with single compressor designs on 04-07 models, plus additional 2 compressor (stage) models from 08-12 sizes.
   c. Compressor motors shall be cooled by refrigerant gas passing through motor windings.
   d. Compressors shall be internally protected from high discharge temperature conditions.
   e. Compressors shall be protected from an overtemperature and over-amperage conditions by an internal, motor overload device.
   f. Compressor shall be factory mounted on rubber grommets.
   g. Compressor motors shall have internal line break thermal, current overload and high pressure differential protection.
   h. Crankcase heaters shall be utilized on all models to protect compressor with specific refrigerant charge.

23 81 19.13.L. Filter Section

1. Filters access is specified in the unit cabinet section of this specification.
2. Filters shall be held in place by a pivoting filter tray, facilitating easy removal and installation.
3. Shall consist of factory-installed, low velocity, throw-away 2-in. thick fiberglass filters.
4. Filters shall be standard, commercially available sizes.
5. Only one size filter per unit is allowed.

23 81 19.13.M. Evaporator Fan and Motor

1. Evaporator fan motor:
   a. Shall have permanently lubricated bearings.
   b. Shall have inherent automatic-reset thermal overload protection or circuit breaker.
   c. Shall have a maximum continuous bhp rating for continuous duty operation; no safety factors above that rating shall be required.
2. Electric Drive (Direct Drive) X13 – 5 Speed/Torque Evaporator Fan:
   a. Multi speed motor with easy quick adjustment settings.
   b. Blower fan shall be double inlet type with forward curved blades.
   c. Shall be constructed from steel with a corrosion resistant finish and dynamically balanced.
   d. Standard on all 04-06 models.
3. Belt-driven Evaporator Fan:
   a. Belt drive shall include an adjustable pitch motor pulley.
   b. Shall use sealed, permanently lubricated ball-bearing type.
   c. Blower fan shall be double inlet type with forward curved blades.
   d. Shall be constructed from steel with a corrosion resistant finish and dynamically balanced.
   e. Standard on all 07-12 size models. Optional on all 04-06 3-phase models.

23 81 19.13.N. Condenser Fans and Motors

1. Condenser fan motors:
   a. Shall be a totally enclosed motor.
   b. Shall use permanently lubricated bearings.
   c. Shall have inherent thermal overload protection with an automatic reset feature.
   d. Shall use a shaft down design on all sizes.
2. Condenser Fans:
   a. Shall be a direct driven propeller type fan.
   b. Shall have aluminum blades riveted to corrosion resistant steel spiders and shall be dynamically balanced.

23 81 19.13.O. Special Features, Options and Accessories

1. Integrated Economizers:
   a. Integrated, gear driven parallel modulating blade design type capable of simultaneous economizer and compressor operation.

b. Independent modules for vertical or horizontal return configurations shall be available. Vertical return modules shall be available as a factory-installed option.

c. Damper blades shall be galvanized steel with composite gears. Plastic or composite blades on intake or return shall not be acceptable.

d. Shall include all hardware and controls to provide free cooling with outdoor air when temperature and/or humidity are below setpoints.

e. Shall be equipped with gear driven dampers for both the outdoor ventilation air and the return air for positive air stream control.

f. Shall be equipped with low leakage dampers, not to exceed 2% leakage at 1 in. wg pressure differential.

g. Shall be capable of introducing up to 100% outdoor air.

h. Shall be equipped with a barometric relief damper capable of relieving up to 100% return air.

i. Shall be designed to close damper(s) during loss-of-power situations with spring return built into motor.

j. Dry bulb outdoor air temperature sensor shall be provided as standard. Outdoor air sensor setpoint shall be adjustable and shall range from 40 to 100°F / 4 to 38°C. Additional sensor options shall be available as accessories.

k. The economizer controller shall also provide control of an accessory power exhaust unit function. Factory set at 100%, with a range of 0% to 100%.

l. The economizer shall maintain minimum airflow into the building during occupied period and provide design ventilation rate for full occupancy. A remote potentiometer may be used to override the damper setpoint.

m. Dampers shall be completely closed when the unit is in the unoccupied mode.

n. Economizer controller shall accept a 2-10Vdc CO_2 sensor input for IAQ/DCV control. In this mode, dampers shall modulate the outdoor air damper to provide ventilation based on the sensor input.

o. Compressor lockout sensor shall open at 35°F (2°C) and close at 50°F (10°C).

p. Actuator shall be direct coupled to economizer gear. No linkage arms or control rods shall be acceptable.

q. Economizer controller shall provide indications when in free cooling mode, in the DCV mode, or the exhaust fan contact is closed.

r. Economizer equipped with a mixed air sensor field mounted on the indoor fan blower side plate to control return air and outdoor air dampers to maintain 55°F (13°C) temperature.

2. Two-Position Motorized Damper

a. Damper shall be a Two-Position Motorized Damper. Damper travel shall be from the full closed position to the field adjustable %-open setpoint.

b. Damper shall include adjustable damper travel from 25% to 100% (full open).

c. Damper shall include single or dual blade, gear driven dampers and actuator motor.

d. Actuator shall be direct coupled to damper gear. No linkage arms or control rods shall be acceptable.

e. Damper will admit up to 100% outdoor air for applicable rooftop units.

f. Damper shall close upon indoor (evaporator) fan shutoff and/or loss of power.

g. The damper actuator shall plug into the rooftop unit's wiring harness plug. No hard wiring shall be required.

h. Outside air hood shall include aluminum water entrainment filter

3. Manual damper

a. Manual damper package shall consist of damper, air inlet screen, and rain hood which can be preset to admit up to 50% outdoor air for year round ventilation.

4. Head Pressure Control Package

a. Controller shall control coil head pressure by condenser fan speed modulation or condenser fan cycling and wind baffles.

b. Shall consist of solid state control and condenser coil temperature sensor to maintain condensing temperature between 90°F (32°C) and 110°F (43°C) at outdoor ambient temperatures down to -20°F (-29°C).

5. Condenser Coil Hail Guard Assembly

a. Shall protect against damage from hail.

b. Shall be louvered design.

6. Unit Mounted, Non-Fused Disconnect Switch:

a. Switch shall be factory-installed, internally mounted.

b. National Electric Code (NEC) and UL approved non-fused switch shall provide unit power shutoff.

c. Shall be accessible from outside the unit

d. Shall provide local shutdown and lockout capability.

7. Convenience Outlet:
   a. Powered convenience outlet.
      (1.) Outlet shall be powered from main line power to the rooftop unit.
      (2.) Outlet shall be powered from line side or load side of disconnect by installing contractor, as required by code. If outlet is powered from load side of disconnect, unit electrical ratings shall be UL certified and rated for additional outlet amperage.
      (3.) Outlet shall be factory-installed and internally mounted with easily accessible 115-v female receptacle.
      (4.) Outlet shall include 15 amp GFI receptacles with independent fuse protection.
      (5.) Voltage required to operate convenience outlet shall be provided by a factory-installed step down transformer.
      (6.) Outlet shall be accessible from outside the unit.
   b. Non-Powered convenience outlet.
      (1.) Outlet shall be powered from a separate 115-120v power source.
      (2.) A transformer shall not be included.
      (3.) Outlet shall be factory-installed and internally mounted with easily accessible 115-v female receptacle.
      (4.) Outlet shall include 15 amp GFI receptacles.
      (5.) Outlet shall be accessible from outside the unit.
8. Thru-the-Base Connectors:
   a. Kits shall provide connectors to permit electrical connections to be brought to the unit through the unit basepan.
   b. Minimum of three connection locations per unit.
9. Propeller Power Exhaust:
   a. Power exhaust shall be used in conjunction with an integrated economizer.
   b. Independent modules for vertical or horizontal return configurations shall be available.
   c. Horizontal power exhaust shall be mounted in return ductwork.
   d. Power exhaust shall be controlled by economizer controller operation. Exhaust fans shall be energized when dampers open past the 0-100% adjustable setpoint on the economizer control.
10. Roof Curbs (Vertical):
   a. Full perimeter roof curb with exhaust capability providing separate air streams for energy recovery from the exhaust air without supply air contamination.
   b. Formed galvanized steel with wood nailer strip and shall be capable of supporting entire unit weight.
   c. Permits installation and securing of ductwork to curb prior to mounting unit on the curb.
11. Medium and high Static Indoor Fan Motor(s) and Drive(s) (04-12):
   a. Medium and high static motor(s) and drive(s) shall be factory-installed to provide additional performance range.
12. Thru-the-Bottom Utility Connectors:
   a. Kit shall provide connectors to permit gas and electrical connections to be brought to the unit through the basepan.
13. Outdoor Air Enthalpy Sensor:
   a. The outdoor air enthalpy sensor shall be used to provide single enthalpy control. When used in conjunction with a return air enthalpy sensor, the unit will provide differential enthalpy control. The sensor allows the unit to determine if outside air is suitable for free cooling.
14. Return Air Enthalpy Sensor:
   a. The return air enthalpy sensor shall be used in conjunction with an outdoor air enthalpy sensor to provide differential enthalpy control.
15. Indoor Air Quality (CO_2) Sensor:
   a. Shall be able to provide demand ventilation indoor air quality (IAQ) control.
   b. The IAQ sensor shall be available in duct mount, wall mount, or wall mount with LED display. The setpoint shall have adjustment capability.
16. Smoke detectors (Factory-Installed Only):
   a. Shall be a Four-Wire Controller and Detector.
   b. Shall be environmental compensated with differential sensing for reliable, stable, and drift-free sensitivity.
   c. Shall use magnet activated test/reset sensor switches.
   d. Shall have tool-less connection terminal access.
   e. Shall have a recessed momentary switch for testing and resetting the detector.

f. Controller shall include:

(1.) One set of normally open alarm initiation contacts for connection to an initiating device circuit on a fire alarm control panel.

(2.) Two Form-C auxiliary alarm relays for interface with rooftop unit or other equipment.

(3.) One Form-C supervision (trouble) relay to control the operation of the Trouble LED on a remote test/reset station.

(4.) Capable of direct connection to two individual detector modules.

(5.) Can be wired to up to 14 other duct smoke detectors for multiple fan shutdown applications.

17. Time Guard

a. Shall prevent compressor short cycling by providing a 5-minute delay (±2 minutes) before restarting a compressor after shutdown for any reason.

b. One device shall be required per compressor.

18. Electric Heat:

a. Heating Section

(1.) Heater element open coil resistance wire, nickel-chrome alloy, 0.29 inches inside diameter, strung through ceramic insulators mounted on metal frame. Coil ends are staked and welded to terminal screw slots.

(2.) Heater assemblies are provided with integral fusing for protection of internal heater circuits not exceeding 48 amps each. Auto reset thermo limit controls, magnetic heater contactors (24V coil) and terminal block all mounted in electric heater control box (minimum 18 ga galvanized steel) attached to end of heater assembly.

19. Hinged Access panels

a. Shall provide easy access through integrated quarter turn latches.

b. Shall be on major panels of filter, control box, fan motor and compressor.

Copyright 2011 Carrier Corp. • 7310 W. Morris St. • Indianapolis, IN 46231 Printed in U.S.A. Edition Date: 03/11 **Catalog No: 50HCQ–03PD**

Manufacturer reserves the right to change, at any time, specifications and designs without notice and without obligations.

Replaces: 50HCQ–02PD