50TCQ
Packaged Heat Pump
3 to 12.5 Nominal Tons

Carrier
turn to the experts

Product Data

WeatherMaker®

C08613

Puron™
the environmentally sound refrigerant

TABLE OF CONTENTS

	PAGE
FEATURES AND BENEFITS	3
MODEL NUMBER NOMENCLATURE	4
FACTORY OPTIONS & ACCESSORIES	5
AHRI CAPACITY RATING	8
SOUND PERFORMANCE	9
PHYSICAL DATA	10
WEIGHTS & DIMENSIONS	20
APPLICATION DATA	36
COOLING TABLES	38
STATIC PRESSURE TABLES	50
FAN PERFORMANCE	51
OUTDOOR AIR INTAKE & EXHAUST PERF	63
ELECTRICAL INFO	66
MCA / MOCP	68
TYPICAL WIRING DIAGRAMS	84
GUIDE SPECIFICATIONS	93

Carrier®

Turn to the Experts.℠

Your Carrier Packaged Heat Pump rooftop unit (RTU) was designed by customers for customers. With no-strip screw collars, handled access panels, and more we've made your unit easy to install, easy to maintain and easy to use.

Easy to install:

All WeatherMaker™ units are field-convertible to horizontal air flow; no special adapter curbs or kits are necessary. Convertible airflow design makes it easy to adjust to unexpected job site complications. Lighter units make easy replacement. Carrier 3 - 12.5 ton 50TCQ rooftops fit on existing Carrier curbs dating back to 1989. Also, our large control box gives you room to work and room to mount Carrier accessory controls.

Easy to maintain:

Easy access handles by Carrier provide quick and easy access to all normally serviced components. Our "no-strip" screw system has superior holding power and guides screws into position while preventing the screw from stripping the unit's metal. Take accurate pressure readings by reading condenser pressure with panels on. Simply remove the black, composite plug, route your gauge line(s) through the hole, and connect them to the refrigeration service valve(s). Now, you can take refrigeration system pressure readings without affecting the condenser airflow.

Easy to use:

The newly designed, master terminal board by Carrier puts all your connections and troubleshooting points in one convenient place, standard. Most low voltage connections are made to the same board and make it easy to find what you're looking for and easy to access it. Carrier rooftops have high and low pressure switches, a filter drier, and 2-in. (51mm) filters standard.

FEATURES AND BENEFITS

- Up to 28% lighter than similar industry units. Lighter rooftops make easier replacement jobs.
- 3 - 12.5 ton units fit on existing Carrier rooftop curbs making the utility connections the same. This saves time and money on replacement jobs.
- Standardized components and layout. Standardized components and controls make service and stocking parts easier.
- Scroll compressors on all units. This makes service, stocking parts, replacement, and trouble-shooting easier.
- Crankcase heater on all models (except 04 size) provides added protection in all applications.
- Precision-sized suction line accumulator provides high reliability by preventing liquid from entering the compressor during low ambient conditions and reverse cycle switch over.
- Field convertible airflow (3 - 12.5 tons). Being able to convert a unit from vertical airflow to horizontal makes it easy to overcome job site complications.
- 4-way reversing valve rapidly changes the flow of refrigerant to quickly changeover from cooling to heating and heating to cooling.
- Easy-adjust, belt drive motor available on all sizes. Carrier provides a factory solution for most points in the fan performance table. There's no need for field-supplied drives or motors.
- 3-5 ton models come standard with an Electric Drive X13, 5 speed/torque motor to provide exact performance in many applications. Belt drive motor optional.
- Provisions for bottom or side condensate drain.
- Capable of thru-the-base or thru-the-curb electrical routing.
- Dependable time/temperature defrost logic provides a defrost cycle, if needed, every 30, 60, 90 or 120 minutes and is adjustable.
- Single-point electrical connection.
- Sloped, composite drain pan. Sloped, composite drain pan sheds water; and won't rust.
- Standardized controls and control box layout. Standardized components and controls make stocking parts and service easier.
- Clean, easy to use control box.
- Standard coils are copper round tube, aluminum plate fin with optional coil coatings and copper fin design.
- Color-coded wiring.
- Large, laminated wiring and power wiring drawings which are affixed to unit make troubleshooting easy.
- Single, central terminal board for test and wiring connections.
- Fast-access, handled, panels for easy access to the blower and blower motor, control box, and compressors.
- "No-strip" screw system guides screws into the panel and captures them tightly without stripping the screw, the panel, or the unit.
- Exclusive, newly-designed indoor refrigerant header for easier maintenance and replacement.
- Mechanical cooling (115°F to 25°F or 46°C to -4°C) on Electro-Mechanical (E/M) and Direct Digital Controller (DDC) (PremierLink™ or RTU-MP controller).
- 2-in. (51mm) disposable filters on all units.
- High capacity refrigerant filter drier on each circuit.
- High pressure switch, loss of charge switch and freeze protection adds greater unit reliability.

MODEL NUMBER NOMENCLATURE

1	2	3	4	5	6	7	8	9	10	11	12	13	14	15	16	17	18
5	0	T	C	Q	A	0	6	A	2	A	5	A	0	A	0	A	0

Unit Type
50 = Cooling/Elec Heat RTU

Model
TC = High Eff (with Puron refrigerant)

Heat Size
Q = Heat Pump

Refrig. System Options
A = 1–stage cooling compressor models
D = 2–stg. cooling compressor models

Cooling Tons
04 = 3 Ton
05 = 4 Ton
06 = 5 Ton
07 = 6 Ton
08 = 7.5 Ton
09 = 8.5 Ton
12 = 10 Ton
14 = 12.5 Ton

Sensor Options
A = None
B = RA smoke detector
C = SA smoke detector
D = RA & SA smoke detector
E = CO_2 sensor
F = RA smoke detector & CO_2
G = SA smoke detector & CO_2
H = RA & SA smoke detector & CO_2

Indoor Fan Options
0 = Electric drive X13 5–speed/torque motor (3–5 ton only)
1 = Standard static option – Belt drive
2 = Medium static option – Belt drive
3 = High static option – Belt drive

Coil Options (Outdoor – Indoor – Hail Guard)
A = Al/Cu – Al/Cu
B = Precoat Al/Cu – Al/Cu
C = E coat Al/Cu – Al/Cu
D = E coat Al/Cu – E coat Al/Cu
E = Cu/Cu – Al/Cu
F = Cu/Cu – Cu/Cu
M = Al/Cu – Al/Cu – Louvered Hail Guards
N = Precoat Al/Cu – Al/Cu – Louvered Hail Guards
P = E coat Al/Cu – Al/Cu – Louvered Hail Guards
Q = E coat Al/Cu – E coat Al/Cu – Louvered Hail Guards
R = Cu/Cu – Al/Cu – Louvered Hail Guards
S = Cu/Cu – Cu/Cu – Louvered Hail Guards

Voltage
1 = 575/3/60
3 = 208–230/1/60
5 = 208–230/3/60
6 = 460/3/60

Design Rev
Factory assigned

Base Unit Controls
0 = Electromechanical
1 = PremierLink DDC controller
2 = Open protocol DDC controller

Intake / Exhaust Options
A = None
B = Temp econo w/ baro relief
F = Enthalpy econo w/ baro relief
K = 2 position damper

Service Options
0 = None
1 = Unpowered convenience outlet
2 = Powered convenience outlet

Electrical Options
A = None
C = Non–fused disc
D = Thru the base
F = Non–fused & thru the base

Packaging
0 = Standard
1 = LTL

FACTORY OPTIONS AND/OR ACCESSORIES

Table 1 – FACTORY-INSTALLED OPTIONS AND FIELD-INSTALLED ACCESSORIES

CATEGORY	ITEM	FACTORY INSTALLED OPTION	FIELD INSTALLED ACCESSORY
Cabinet	Thru–the–base electrical connections	X	X
	Disconnect Switch Bracket (Available 14 size only)		X
	Supply Duct Cover (Available 14 size only)		X
Coil Options	Cu/Cu indoor and/or outdoor coils	X	
	Pre–coated outdoor coils	X	
	Premium, E–coated outdoor coils	X	
Condenser Protection	Condenser coil hail guard (louvered design)	X	X
Controls	Thermostats, temperature sensors, and subbases		X
	PremierLink DDC communicating controller	X	X
	RTU–MP Multi–protocol controller	X	
	Smoke detector (supply and/or return air)	X	
	Time Guard II compressor delay control circuit		X
	Phase Monitor		X
Economizers & Outdoor Air Dampers	EconoMi$er IV (for electro–mechanical controlled RTUs)	X	X
	EconoMi$er2 (for DDC controlled RTUs)	X	X
	Motorized 2 position outdoor air damper	X	X
	Manual outdoor air damper (25% and 50%)		X
	Barometric relief[1]	X	X
	Power exhaust		X
Economizer Sensors & IAQ Devices	Single dry bulb temperature sensors[2]	X	X
	Differential dry bulb temperature sensors[2]		X
	Single enthalpy sensors[2]	X	X
	Differential enthalpy sensors[2]		X
	CO_2 sensor (wall, duct, or unit mounted)[2]	X	X
Electric Heat	Electric Resistance Heaters		X
	Single Point Kit		X
Indoor Motor & Drive	Multiple motor and belt drive packages	X	
	Electric Drive, X13, 5–speed/torque (3–5 ton)	X	
Low Ambient Control	Motormaster® head pressure controller[3]		X
Power Options	Convenience outlet (powered)	X	
	Convenience outlet (unpowered)	X	
	Non–fused disconnect	X	
Roof Curbs	Roof curb 14–in. (356mm)		X
	Roof curb 24–in. (610mm)		X

NOTES:
1. Included with economizer.
2. Sensors for optimizing economizer.
3. See application data for assistance.

Economizer (dry bulb or enthalpy)

Economizers save money. They bring in fresh, outside air for ventilation; and provide cool, outside air to cool your building. This is the preferred method of low ambient cooling. When coupled to CO_2 sensors, Economizers can provide even more savings by coupling the ventilation air to only that amount required.

Economizers are available, installed and tested by the factory, with either enthalpy or dry bulb temperature inputs. There are also models for electromechanical as well as direct digital controllers. Additional sensors are available as accessories to optimize the economizers.

Economizers include gravity controlled, barometric relief which equalizes building pressure and ambient air pressures. This can be a cost effective solution to prevent building pressurization.

CO_2 Sensor

Improves productivity and saves money by working with the economizer to intake only the correct amount of outside air for ventilation. As occupants fill your building, the CO_2 sensor detects their presence through increasing CO_2 levels, and opens the economizer appropriately.

When the occupants leave, the CO_2 levels decrease, and the sensor appropriately closes the economizer. This intelligent control of the ventilation air, called Demand Control Ventilation (DCV) reduces the overall load on the rooftop, saving money.

Smoke Detectors

Trust the experts. Smoke detectors make your application safer and your job easier. Carrier smoke detectors immediately shut down the rooftop unit when smoke is detected. They are available, installed by the factory, for supply air, return air, or both.

Louvered Hail Guards

Sleek, louvered panels protect the condenser coil from hail damage, foreign objects, and incidental contact.

Convenience Outlet (powered or un-powered)

Lower service bills by including a convenience outlet in your specification. Carrier will install this service feature at our factory, powered. Provides a convenient, 15 amp, 115V GFCI receptacle.

Non-fused Disconnect

This OSHA-compliant, factory-installed, safety switch allows a service technician to locally secure power to the rooftop.

Power Exhaust Pressure Relief

Superior internal building pressure control. This field-installed accessory may eliminate the need for costly, external pressure control fans.

PremierLink™

This CCN controller regulates your rooftop's performance to tighter tolerances and expanded limits, as well as facilitates zoning systems and digital accessories. It also unites your Carrier HVAC equipment together on one, coherent CCN network. The PremierLink can be factory-installed, or easily field-installed.

RTU-MP, Multi-protocol Controller

Connect the rooftop to an existing BAS without needing complicated translators or adapter modules using the RTU-MP controller. This new controller speaks the 4 most common building automation system languages (Bacnet, Modbus, N2, and Lonworks). Use this controller when you have an existing BAS.

Time Guard II Control Circuit

This accessory protects your compressor by preventing short-cycling in the event of some other failure, prevents the compressor from restarting for 30 seconds after stopping. Not required with PremierLink®, RTU-MP, or authorized commercial thermostats.

Filter or Fan Status Switches

Use these differential pressure switches to detect a filter clog or indoor fan motor failure. When used in conjunction with a compatible unit controller/thermostat, the switches will activate an alarm to warn the appropriate personnel.

Motorized 2-Position Damper

The new Carrier 2-position, motorized outdoor air damper admits up to 100% outside air. Using reliable, gear-driven technology, the 2-position damper opens to allow ventilation air and closes when the rooftop stops, stopping unwanted infiltration.

Manual OA Damper

Manual outdoor air dampers are an economical way to bring in ventilation air. The dampers are available in 25% and 50% versions.

Motormaster Head Pressure Controller

The Motormaster motor controller is a low ambient, head pressure controller kit that is designed to maintain the unit's condenser head pressure during periods of low ambient cooling operation. This device should be used as an alternative to economizer free cooling not when economizer usage is either not appropriate or desired. The Motormaster will either cycle the outdoor fan motors or operate them at reduced speed to maintain the unit operation, depending on the model.

Alternate Motors and Drives

Some applications need larger horsepower motors, some need more airflow, and some need both. Regardless of the case, your Carrier expert has a factory installed combination to meet your application. A wide selection of motors and pulleys (drives) are available, factory installed, to handle nearly any application.

Thru-the-Base Connections

Thru-the-base connections, available as either an accessory or as a factory option, are necessary to ensure proper connection and seal when routing wire and piping through the rooftop's basepan and curb. These couplings eliminate roof penetration and should be considered for gas lines, main power lines, as well as control power.

Disconnect Switch Bracket

Provides a pre-engineered and sized mounting bracket for applications requiring a unit mounted fused disconnect of greater than 100 amps. Bracket assures that no damage will occur to coils when mounting with screws and other fasteners.

Supply Duct Cover

This supply duct cover is required when field converting the factory standard vertical duct supply to horizontal duct supply configuration. One is required per unit.

Electric Heaters

Carrier offers a full line of field-installed accessory heaters. The heaters are very easy to use and install. All are pre-engineered and certified.

Table 2 – AHRI COOLING RATING TABLES

COOLING MODE						
50TCQ	NOMINAL CAPACITY (TONS)	NET COOLING CAPACITY (BTUH)	TOTAL POWER (kW)	SEER	EER	IEER
A04	3	37,000	3.30	13.40*	11.00	N/A
A05	4	47,000	4.10	13.10*	11.20	N/A
A06	5	61,500	5.50	13.20*	11.15	N/A
A07	6	70,000	6.30	N/A	11.10	12.20
D08	7.5	88,000	7.80	N/A	11.20	12.20
D09	8.5	99,000	8.80	N/A	11.20	12.20
D12	10	117,000	10.60	N/A	11.00	11.30
D14	12.5	142,000	13.30	N/A	10.60	10.70

NOTE:
All AHRI ratings are based on 230, 460 and 575 volt.
* Electric Drive (direct drive) X13 5 speed/torque motor. SEER rating is 13.0 for belt drive.
NA Not applicable

50TCQ

HEATING MODE					
50TCQ	HSPF	HEATING, LOW AT 17°F (–8°C) AMBIENT		HEATING, HIGH AT 47°F (8°C) AMBIENT	
		CAPACITY (BTUH)	COP	CAPACITY (BTUH)	COP
A04	7.70	18,200	N/A	35,600	N/A
A05	7.70	23,600	N/A	45,500	N/A
A06	7.70	31,200	N/A	58,000	N/A
A07	N/A	34,800	2.25	67,000	3.30
D08	N/A	48,000	2.25	86,000	3.30
D09	N/A	54,500	2.25	96,000	3.30
D12	N/A	62,300	2.25	116,000	3.30
D14	N/A	76,000	2.05	142,000	3.20

LEGEND
AHRI – Air Conditioning, Heating and Refrigeration Institute
ASHRAE – American Society of Heating, Refrigerating and Air Conditioning, Inc.
COP – Coefficient of Performance
EER – Energy Efficiency Ratio
HSPF – Heating Seasonal Performance Factor
IEER – Integrated Energy Efficiency Ratio
SEER – Seasonal Energy Efficiency Ratio

NOTES:
1. Rated and certified under AHRI Standard 210/240 or 340/360, as appropriate.
2. Ratings are based on:
   Cooling Standard: 80°F (27°C) db, 67°F (19°C) wb indoor air temp and 95°F db outdoor air temp.
   IEER Standard: A measure that expresses cooling part–load EER efficiency for commercial unitary air conditioning and heat pump equipment on the basis of weighted operation at variable load capacities.
3. All 50TCQ units comply with ASHRAE 90.1 Energy Standard for minimum SEER and EER requirements.

Use of the AHRI Certified TM Mark indicates a manufacturer's participation in the program For verification of certification for individual products, go to www.ahridirectory.org.

Table 3 – MINIMUM - MAXIMUM AIRFLOWS ELECTRIC HEAT

UNIT	COOLING		ELECTRIC HEATERS	
	MINIMUM	MAXIMUM	MINIMUM	MAXIMUM
50TCQ*04	900	1500	900	1500
50TCQ*05	1200	2000	1200	2000
50TCQ*06	1500	2500	1500	2500
50TCQ*07	1800	3000	1800	3000
50TCQ*08	2250	3750	2250*	3750
50TCQ*09	2550	4250	2550*	4250
50TCQ*12	3000	5000	3000	5000
50TCQ*14	3750	6250	3750	6250

*Minimum electric heat CFM exceptions :

UNIT	UNIT VOLTAGE	HEATER kW	UNIT CONFIGURATION	REQUIRED MINIMUM CFM
50TCQ*08 50TCQ*09	575	17.0	Horizontal or Vertical	2800
		34.0		2350

Table 4 – SOUND PERFORMANCE TABLE

50TCQ	OUTDOOR SOUND (dB)								
	A–WEIGHTED	63	125	250	500	1000	2000	4000	8000
A04	77	78.9	81.7	74.9	72.5	70.3	65.6	65.6	62.6
A05	80	90.4	84.6	77.6	77.5	74.8	70.6	68.0	64.2
A06	80	92.7	84.9	79.0	76.7	73.8	69.6	66.4	62.8
A07	78	88.0	79.5	76.2	75.8	72.5	68.6	65.7	62.4
D08	82	89.7	81.5	80.5	79.2	77.1	73.2	70.2	67.4
D09	84	90.8	85.2	81.6	79.5	78.1	74.0	70.4	66.5
D12	87	88.1	90.0	85.9	83.0	81.6	78.5	76.4	75.5
D14	83	89.3	85.2	80.3	78.0	77.0	74.4	73.7	68.9

LEGEND
dB – Decibel

NOTES:
1. Outdoor sound data is measured in accordance with AHRI standard 270–95.
2. Measurements are expressed in terms of sound power. Do not compare these values to sound pressure values because sound pressure accounts for specific environmental factors which do not match individual applications. Sound power values are independent of the environment and therefore more accurate.
3. A–weighted sound ratings filter out very high and very low frequencies, to better approximate the response of an “average” human ear. A–weighted measurements for Carrier units are taken in accordance with 270–95.

Table 5 – PHYSICAL DATA (COOLING) 3 - 6 TONS

	50TCQA04	50TCQA05	50TCQA06	50TCQA07
Refrigeration System				
# Circuits / # Comp. / Type	1 / 1 / Scroll	1 / 1 / Scroll	1 / 1 / Scroll	1 / 1 / Scroll
Puron® refrig. (R–410A) charge per circuit A/B (lbs–oz)	9 – 8 / –	10 –3 / –	12 – 13 / –	16 – 13 / –
Metering Device	Acutrol	Acutrol	Acutrol	Acutrol
High pressure Trip / Reset (psig)	630 / 505	630 / 505	630 / 505	630 / 505
Loss of Charge Pressure Trip / Reset (psig)	27 / 44	27 / 44	27 / 44	27 / 44
Compressor Capacity Staging (%)	100%	100%	100%	100%
Evap. Coil				
Material – Tube / Fin	Cu / Al	Cu / Al	Cu / Al	Cu / Al
Coil type	3/8–in RTPF	3/8–in RTPF	3/8–in RTPF	3/8–in RTPF
Rows / FPI	3 / 15	3 / 15	4/ 15	4/ 15
Total Face Area (ft^2)	5.5	5.5	7.3	7.3
Condensate Drain Conn. Size	3/4–in	3/4–in	3/4–in	3/4–in
Evap. Fan and Motor				
Standard Static 1 phase				
Motor Qty / Drive Type	1 / Direct	1 / Direct	1 / Direct	N/A
Max BHP	1	1	1	–
RPM Range	600–1200	600–1200	600–1200	–
Motor Frame Size	48	48	48	–
Fan Qty / Type	1 / Centrifugal	1 / Centrifugal	1 / Centrifugal	–
Fan Diameter x Length (in)	10 x 10	10 x 10	11 x 10	–
Standard Static 3 phase				
Motor Qty / Drive Type	1 / Direct	1 / Direct	1 / Direct	1 / Belt
Max BHP	1	1	1	1.5
RPM Range	600–1200	600–1200	600–1200	878–1192
Motor Frame Size	48	48	48	56
Fan Qty / Type	1 / Centrifugal	1 / Centrifugal	1 / Centrifugal	1 / Centrifugal
Fan Diameter x Length (in)	10 x 10	10 x 10	11 x 10	10 x 10
Medium Static 3 phase				
Motor Qty / Drive Type	1 / Belt	1 / Belt	1 / Belt	1 / Belt
Max BHP	1.5	1.5	2	2.9
RPM Range	819–1251	920–1303	1066–1380	1066–1380
Motor Frame Size	56	56	56	56
Fan Qty / Type	1 / Centrifugal	1 / Centrifugal	1 / Centrifugal	1 / Centrifugal
Fan Diameter x Length (in)	10 x 10	10 x 10	10 x 10	10 x 10
High Static 3 phase				
Motor Qty / Drive Type	1 / Belt	1 / Belt	1 / Belt	1 / Belt
Max BHP	2	2	2.9	2.9
RPM Range	1035–1466	1035–1466	1208–1639	1208–1639
Motor Frame Size	56	56	56	56
Fan Qty / Type	1 / Centrifugal	1 / Centrifugal	1 / Centrifugal	1 / Centrifugal
Fan Diameter x Length (in)	10 x 10	10 x 10	10 x 10	10 x 10
Cond. Coil				
Material – Tube / Fin	Cu / Al	Cu / Al	Cu / Al	Cu / Al
Coil type	3/8–in RTPF	3/8–in RTPF	3/8–in RTPF	3/8–in RTPF
Rows / FPI	2 / 17	2 / 17	2 / 17	2 / 17
Total Face Area (ft^2)	10.7	12.7	15	21.25
Cond. fan / motor				
Qty / Motor Drive Type	1 / Direct	1 / Direct	1 / Direct	1 / Direct
Motor HP / RPM	1/8 / 825	1/4 / 1100	1/4 / 1100	1/4 / 1100
Fan diameter (in)	22	22	22	22
Filters				
RA Filter # / Size (in)	2 / 16 x 25 x 2	2 / 16 x 25 x 2	4 / 16 x 16 x 2	4 / 16 x 16 x 2
OA inlet screen # / Size (in)	1 / 20 x 24 x 1	1 / 20 x 24 x 1	1 / 20 x 24 x 1	1 / 20 x 24 x 1

Table 6 – PHYSICAL DATA (COOLING) 7.5 - 12.5 TONS

	50TCQD08	50TCQD09	50TCQD12	50TCQD14
Refrigeration System				
# Circuits / # Comp. / Type	2 / 2 / Scroll	2 / 2 / Scroll	2 / 2 / Scroll	2 / 2 / Scroll
Puron® refrig. (R–410A) charge per circuit A/B (lbs–oz)	10 – 3 / 10 – 3	11 – 2 / 11 – 2	12 – 2 / 11 – 2	14 – 8 / 13 – 8
Metering Device	Acutrol	Acutrol	Acutrol	Acutrol
High pressure Trip / Reset (psig)	630 / 505	630 / 505	630 / 505	630 / 505
Loss of Charge Pressure Trip / Reset (psig)	27 / 44	27 / 44	27 / 44	27 / 44
Compressor Capacity Staging (%)	50% / 100%	50% / 100%	50% / 100%	50% / 100%
Evap. Coil				
Material – Tube / Fin	Cu / Al	Cu / Al	Cu / Al	Cu / Al
Coil type	3/8–in RTPF	3/8–in RTPF	3/8–in RTPF	3/8–in RTPF
Rows / FPI	3 / 15	4 / 15	4 / 15	3 / 15
Total Face Area (ft^2)	11.1	11.1	11.1	17.5
Condensate Drain Conn. Size	3/4”	3/4”	3/4”	3/4”
Evap. Fan and Motor				
Standard Static 3 phase				
Motor Qty / Drive Type	1 / Belt	1 / Belt	1 / Belt	1 / Belt
Max BHP	1.2	1.2	2.4	2.9
RPM Range	460–652	460–652	591–839	507–676
Motor Frame Size	56	56	56	56
Fan Qty / Type	1 / Centrifugal	1 / Centrifugal	1 / Centrifugal	1 / Centrifugal
Fan Diameter x Length (in)	15 x 15	15 x 15	15 x 15	18 x 18
Medium Static 3 phase				
Motor Qty / Drive Type	1 / Belt	1 / Belt	1 / Belt	1 / Belt
Max BHP	2.9	2.9	2.9	2.9
RPM Range	591–838	591–838	733–949	634–833
Motor Frame Size	56	56	56	56
Fan Qty / Type	1 / Centrifugal	1 / Centrifugal	1 / Centrifugal	1 / Centrifugal
Fan Diameter x Length (in)	15 x 15	15 x 15	15 x 15	18 x 18
High Static 3 phase				
Motor Qty / Drive Type	1 / Belt	1 / Belt	1 / Belt	1 / Belt
Max BHP	2.9	2.9	3.7	6.1
RPM Range	838–1084	838–1084	838–1084	792–971
Motor Frame Size	56	56	56	S184T
Fan Qty / Type	1 / Centrifugal	1 / Centrifugal	1 / Centrifugal	1 / Centrifugal
Fan Diameter x Length (in)	15 x 15	15 x 15	15 x 15	18 x 18
Cond. Coil				
Material – Tube / Fin	Cu / Al	Cu / Al	Cu / Al	Cu / Al
Coil type	3/8–in RTPF	3/8–in RTPF	3/8–in RTPF	3/8–in RTPF
Rows / FPI	2 / 17	2 / 17	3 / 17	2 / 17
Total Face Area (ft^2)	25.1	25.1	25.1	36.1
Cond. fan / motor				
Qty / Motor Drive Type	2 / Direct	2 / Direct	1 / Direct	3 / Direct
Motor HP / RPM	1/4 / 1100	1/4 / 1100	1 / 1175	1/4 / 1100
Fan diameter (in)	22	22	30	22
Filters				
RA Filter # / Size (in)	4 / 20 x 20 x 2	4 / 20 x 20 x 2	4 / 20 x 20 x 2	6 / 18 x 24 x 2 2 / 24 x 27 x 1 (Vertical)
OA inlet screen # / Size (in)	1 / 20 x 24 x 1	1 / 20 x 24 x 1	1 / 20 x 24 x 1	1 / 30 x 39 x 1 (Horizontal)

Table 7 – ELECTRIC HEAT - ELECTRICAL DATA 3 TONS

UNIT	NOM. V–PH–HZ	IFM TYPE	ELECTRIC HEATER PART NUMBER CRHEATERXXXXXX	NOM PWR (kW)	APP PWR (kW)	SINGLE POINT KIT PART NUMBER CRSINGLEXXXXXX			
						WITHOUT C.O. or UNPWRD C.O.		WITH PWRD C.O.	
						WITHOUT P.E.	WITH P.E.	WITHOUT P.E.	WITH P.E.
50TCQA04	208/230–1–60	STD DD	101A00	4.4	3.3/4.0	037A00	037A00	037A00	040A00
			102A00	6.5	4.9/6.0	040A00	040A00	040A00	040A00
			103B00	8.7	6.5/8.0	040A00	040A00	040A00	040A00
			104B00	10.5	7.9/9.6	040A00	040A00	040A00	040A00
			102A00,102A00	13.0	9.8/11.9	041A00	041A00	041A00	041A00
	208/230–3–60	STD DD	101A00	4.4	3.3/4.0	–	–	–	–
			102A00	6.5	4.9/6.0	–	–	–	037A00
			103B00	8.7	6.5/8.0	037A00	037A00	037A00	037A00
			104B00	10.5	7.9/9.6	037A00	037A00	038A00	038A00
			105A00	16.0	12.0/14.7	038A00	038A00	038A00	038A00
		MED BD	101A00	4.4	3.3/4.0	–	–	–	–
			102A00	6.5	4.9/6.0	–	–	–	–
			103B00	8.7	6.5/8.0	–	037A00	037A00	037A00
			104B00	10.5	7.9/9.6	037A00	037A00	037A00	038A00
			105A00	16.0	12.0/14.7	038A00	038A00	038A00	038A00
		HIGH BD	101A00	4.4	3.3/4.0	–	–	–	–
			102A00	6.5	4.9/6.0	–	–	–	–
			103B00	8.7	6.5/8.0	–	037A00	037A00	037A00
			104B00	10.5	7.9/9.6	037A00	037A00	037A00	038A00
			105A00	16.0	12.0/14.7	038A00	038A00	038A00	038A00
	460–3–60	STD DD	106A00	6.0	5.5	–	–	–	–
			107A00	8.8	8.1	–	–	–	–
			108A00	11.5	10.6	–	–	–	–
			109A00	14.0	12.9	–	–	–	–
		MED BD	106A00	6.0	5.5	–	–	–	–
			107A00	8.8	8.1	–	–	–	–
			108A00	11.5	10.6	–	–	–	–
			109A00	14.0	12.9	–	–	–	–
		HIGH BD	106A00	6.0	5.5	–	–	–	–
			107A00	8.8	8.1	–	–	–	–
			108A00	11.5	10.6	–	–	–	–
			109A00	14.0	12.9	–	–	–	–

– No Single Point Kit required

LEGEND

APP PWR – 208 / 230V / 460V / 575V
BD – Belt drive motor
C.O. – Convenience outlet
DD – Electric Drive X13 5 speed/torque motor
FLA – Full load amps
IFM – Indoor fan motor
NOM PWR – 240V / 480V / 600V
P.E. – Power exhaust
PWRD – Powered convenience outlet
UNPWRD – Unpowered convenience outlet

UNIT	NOM. V–PH–HZ	IFM TYPE	ELECTRIC HEATER PART NUMBER CRHEATERXXXXXX	NOM PWR (kW)	APP PWR (kW)	SINGLE POINT KIT PART NUMBER CRSINGLEXXXXXX			
						WITHOUT C.O. or UNPWRD C.O.		WITH PWRD C.O.	
						WITHOUT P.E.	WITH P.E.	WITHOUT P.E.	WITH P.E.
50TCQA05	208/230–1–60	STD DD	101A00	4.4	3.3/4.0	037A00	040A00	040A00	040A00
			103B00	8.7	6.5/8.0	040A00	040A00	040A00	040A00
			102A00,102A00	13.0	9.8/11.9	041A00	041A00	041A00	041A00
			103B00,103B00	17.4	13.1/16.0	041A00	041A00	041A00	041A00
			104B00,104B00	21.0	15.8/19.3	041A00	041A00	041A00	041A00
	208/230–3–60	STD DD	102A00	6.5	4.9/6.0	–	–	–	037A00
			103B00	8.7	6.5/8.0	037A00	037A00	037A00	037A00
			105A00	16.0	12.0/14.7	038A00	038A00	038A00	038A00
			104B00,104B00	21.0	15.8/19.3	039A00	039A00	039A00	039A00
		MED BD	102A00	6.5	4.9/6.0	–	–	–	–
			103B00	8.7	6.5/8.0	–	037A00	037A00	037A00
			105A00	16.0	12.0/14.7	038A00	038A00	038A00	038A00
			104B00,104B00	21.0	15.8/19.3	039A00	039A00	039A00	039A00
		HIGH BD	102A00	6.5	4.9/6.0	–	–	–	–
			103B00	8.7	6.5/8.0	–	037A00	037A00	037A00
			105A00	16.0	12.0/14.7	038A00	038A00	038A00	038A00
			104B00,104B00	21.0	15.8/19.3	039A00	039A00	039A00	039A00
	460–3–60	STD DD	106A00	6.0	5.5	–	–	–	–
			108A00	11.5	10.6	–	–	–	–
			109A00	14.0	12.9	–	–	–	–
			108A00,108A00	23.0	21.1	037A00	037A00	037A00	037A00
		MED BD	106A00	6.0	5.5	–	–	–	–
			108A00	11.5	10.6	–	–	–	–
			109A00	14.0	12.9	–	–	–	–
			108A00,108A00	23.0	21.1	037A00	037A00	037A00	037A00
		HIGH BD	106A00	6.0	5.5	–	–	–	–
			108A00	11.5	10.6	–	–	–	–
			109A00	14.0	12.9	–	–	–	–
			108A00,108A00	23.0	21.1	037A00	037A00	037A00	037A00

– No Single Point Kit required

LEGEND

APP PWR – 208 / 230V / 460V / 575V
BD – Belt drive motor
C.O. – Convenience outlet
DD – Electric Drive X13 5 speed/torque motor
FLA – Full load amps
IFM – Indoor fan motor
NOM PWR – 240V / 480V / 600V
P.E. – Power exhaust
PWRD – Powered convenience outlet
UNPWRD – Unpowered convenience outlet

Table 7 - (cont.) ELECTRIC HEAT - ELECTRICAL DATA **5 TONS**

UNIT	NOM. V–PH–HZ	IFM TYPE	ELECTRIC HEATER PART NUMBER CRHEATERXXXXXX	NOM PWR (kW)	APP PWR (kW)	SINGLE POINT KIT PART NUMBER CRSINGLEXXXXXX			
						WITHOUT C.O. or UNPWRD C.O.		WITH PWRD C.O.	
						WITHOUT P.E.	WITH P.E.	WITHOUT P.E.	WITH P.E.
50TCQA06	208/230–1–60	STD DD	102A00	6.5	4.9/6.0	040A00	040A00	040A00	040A00
			103B00	8.7	6.5/8.0	040A00	040A00	040A00	040A00
			102A00,102A00	13.0	9.8/11.9	041A00	041A00	041A00	041A00
			103B00,103B00	17.4	13.1/16.0	041A00	041A00	041A00	041A00
			104B00,104B00	21.0	15.8/19.3	041A00	041A00	041A00	041A00
	208/230–3–60	STD DD	102A00	6.5	4.9/6.0	–	–	037A00	037A00
			104B00	10.5	7.9/9.6	038A00	038A00	038A00	038A00
			105A00	16.0	12.0/14.7	038A00	038A00	038A00	038A00
			104B00,104B00	21.0	15.8/19.3	039A00	039A00	039A00	039A00
			104B00,105A00	26.5	19.9/24.3	039A00	039A00	039A00	039A00
		MED BD	102A00	6.5	4.9/6.0	–	–	–	037A00
			104B00	10.5	7.9/9.6	037A00	037A00	038A00	038A00
			105A00	16.0	12.0/14.7	038A00	038A00	038A00	038A00
			104B00,104B00	21.0	15.8/19.3	039A00	039A00	039A00	039A00
			104B00,105A00	26.5	19.9/24.3	039A00	039A00	039A00	039A00
		HIGH BD	102A00	6.5	4.9/6.0	–	–	037A00	037A00
			104B00	10.5	7.9/9.6	038A00	038A00	038A00	038A00
			105A00	16.0	12.0/14.7	038A00	038A00	038A00	038A00
			104B00,104B00	21.0	15.8/19.3	039A00	039A00	039A00	039A00
			104B00,105A00	26.5	19.9/24.3	039A00	039A00	039A00	039A00
	460–3–60	STD DD	106A00	6.0	5.5	–	–	–	–
			108A00	11.5	10.6	–	–	–	–
			109A00	14.0	12.9	–	–	–	–
			108A00,108A00	23.0	21.1	037A00	037A00	037A00	037A00
			108A00,109A00	25.5	23.4	037A00	037A00	037A00	037A00
		MED BD	106A00	6.0	5.5	–	–	–	–
			108A00	11.5	10.6	–	–	–	–
			109A00	14.0	12.9	–	–	–	–
			108A00,108A00	23.0	21.1	037A00	037A00	037A00	037A00
			108A00,109A00	25.5	23.4	037A00	037A00	037A00	037A00
		HIGH BD	106A00	6.0	5.5	–	–	–	–
			108A00	11.5	10.6	–	–	–	–
			109A00	14.0	12.9	–	–	–	–
			108A00,108A00	23.0	21.1	037A00	037A00	037A00	037A00
			108A00,109A00	25.5	23.4	037A00	037A00	037A00	037A00

– No Single Point Kit required

LEGEND

APP PWR – 208 / 230V / 460V / 575V
BD – Belt drive motor
C.O. – Convenience outlet
DD – Electric Drive X13 5 speed/torque motor
FLA – Full load amps
IFM – Indoor fan motor
NOM PWR – 240V / 480V / 600V
P.E. – Power exhaust
PWRD – Powered convenience outlet
UNPWRD – Unpowered convenience outlet

UNIT	NOM. V–PH–HZ	IFM TYPE	ELECTRIC HEATER PART NUMBER CRHEATERXXXXXX	NOM PWR (kW)	APP PWR (kW)	SINGLE POINT KIT PART NUMBER CRSINGLEXXXXXX			
						WITHOUT C.O. or UNPWRD C.O.		WITH PWRD C.O.	
						WITHOUT P.E.	WITH P.E.	WITHOUT P.E.	WITH P.E.
50TCQA07	208/230–3–60	STD	102A00	6.5	4.9/6.0	–	037A00	037A00	037A00
			104B00	10.5	7.9/9.6	038A00	038A00	038A00	038A00
			105A00	16.0	12.0/14.7	038A00	038A00	038A00	038A00
			104B00,104B00	21.0	15.8/19.3	039A00	039A00	039A00	039A00
			104B00,105A00	26.5	19.9/24.3	039A00	039A00	039A00	039A00
		MED	102A00	6.5	4.9/6.0	037A00	037A00	037A00	037A00
			104B00	10.5	7.9/9.6	038A00	038A00	038A00	038A00
			105A00	16.0	12.0/14.7	038A00	038A00	038A00	038A00
			104B00,104B00	21.0	15.8/19.3	039A00	039A00	039A00	039A00
			104B00,105A00	26.5	19.9/24.3	039A00	039A00	039A00	039A00
		HIGH	102A00	6.5	4.9/6.0	037A00	037A00	037A00	037A00
			104B00	10.5	7.9/9.6	038A00	038A00	038A00	038A00
			105A00	16.0	12.0/14.7	038A00	038A00	038A00	038A00
			104B00,104B00	21.0	15.8/19.3	039A00	039A00	039A00	039A00
			104B00,105A00	26.5	19.9/24.3	039A00	039A00	039A00	039A00
	460–3–60	STD	106A00	6.0	5.5	–	–	–	–
			108A00	11.5	10.6	–	–	–	–
			109A00	14.0	12.9	–	–	–	–
			108A00,108A00	23.0	21.1	037A00	037A00	037A00	037A00
			108A00,109A00	25.5	23.4	037A00	037A00	037A00	037A00
		MED	106A00	6.0	5.5	–	–	–	–
			108A00	11.5	10.6	–	–	–	–
			109A00	14.0	12.9	–	–	–	–
			108A00,108A00	23.0	21.1	037A00	037A00	037A00	037A00
			108A00,109A00	25.5	23.4	037A00	037A00	037A00	037A00
		HIGH	106A00	6.0	5.5	–	–	–	–
			108A00	11.5	10.6	–	–	–	–
			109A00	14.0	12.9	–	–	–	–
			108A00,108A00	23.0	21.1	037A00	037A00	037A00	037A00
			108A00,109A00	25.5	23.4	037A00	037A00	037A00	037A00

– No Single Point Kit required

LEGEND

APP PWR – 208 / 230V / 460V / 575V
C.O. – Convenience outlet
FLA – Full load amps
IFM – Indoor fan motor
NOM PWR – 240V / 480V / 600V
P.E. – Power exhaust
PWRD – Powered convenience outlet
UNPWRD – Unpowered convenience outlet

Table 7 - (cont.) ELECTRIC HEAT - ELECTRICAL DATA — 7.5 TONS

UNIT	NOM. V–PH–HZ	IFM TYPE	ELECTRIC HEATER PART NUMBER CRHEATERXXXXXX	NOM PWR (kW)	APP PWR (kW)	SINGLE POINT KIT PART NUMBER CRSINGLEXXXXXX			
						WITHOUT C.O. or UNPWRD C.O.		WITH PWRD C.O.	
						WITHOUT P.E.	WITH P.E.	WITHOUT P.E.	WITH P.E.
50TCQD08 (2–STAGE COOL)	208/230–3–60	STD	117A00	10.4	7.8/9.6	049A00	049A00	049A00	049A00
			110A00	16.0	12.0/14.7	049A00	049A00	049A00	049A00
			111A00	24.8	18.6/22.8	051A00	051A00	051A00	051A00
			112A00	32.0	24.0/29.4	051A00	051A00	051A00	051A00
			112A00,117A00	42.4	31.8/38.9	053A00	053A00	053A00	053A00
		MED	117A00	10.4	7.8/9.6	049A00	049A00	049A00	049A00
			110A00	16.0	12.0/14.7	049A00	049A00	049A00	049A00
			111A00	24.8	18.6/22.8	051A00	051A00	051A00	051A00
			112A00	32.0	24.0/29.4	051A00	051A00	051A00	051A00
			112A00,117A00	42.4	31.8/38.9	053A00	053A00	053A00	053A00
		HIGH	117A00	10.4	7.8/9.6	049A00	049A00	049A00	049A00
			110A00	16.0	12.0/14.7	049A00	049A00	049A00	049A00
			111A00	24.8	18.6/22.8	051A00	051A00	051A00	051A00
			112A00	32.0	24.0/29.4	051A00	051A00	051A00	051A00
			112A00,117A00	42.4	31.8/38.9	053A00	053A00	053A00	053A00
	460–3–60	STD	116A00	13.9	12.8	047A00	047A00	047A00	047A00
			113A00	16.5	15.2	047A00	047A00	047A00	047A00
			114A00	27.8	25.5	047A00	050A00	050A00	050A00
			115A00	33.0	30.3	050A00	050A00	050A00	050A00
			114A00,116A00	41.7	38.3	052A00	052A00	052A00	052A00
		MED	116A00	13.9	12.8	047A00	047A00	047A00	047A00
			113A00	16.5	15.2	047A00	047A00	047A00	047A00
			114A00	27.8	25.5	050A00	050A00	050A00	050A00
			115A00	33.0	30.3	050A00	050A00	050A00	050A00
			114A00,116A00	41.7	38.3	052A00	052A00	052A00	052A00
		HIGH	116A00	13.9	12.8	047A00	047A00	047A00	047A00
			113A00	16.5	15.2	047A00	047A00	047A00	047A00
			114A00	27.8	25.5	050A00	050A00	050A00	050A00
			115A00	33.0	30.3	050A00	050A00	050A00	050A00
			114A00,116A00	41.7	38.3	052A00	052A00	052A00	052A00
	575–3–60	STD	118A00	17.0	17.0	047A00	047A00	047A00	047A00
			119A00	34.0	34.0	050A00	050A00	050A00	050A00
		MED	118A00	17.0	17.0	047A00	047A00	047A00	047A00
			119A00	34.0	34.0	050A00	050A00	050A00	050A00
		HIGH	118A00	17.0	17.0	047A00	047A00	047A00	047A00
			119A00	34.0	34.0	050A00	050A00	050A00	050A00

– No Single Point Kit required

LEGEND

APP PWR – 208 / 230V / 460V / 575V
C.O. – Convenience outlet
FLA – Full load amps
IFM – Indoor fan motor
NOM PWR – 240V / 480V / 600V
P.E. – Power exhaust
PWRD – Powered convenience outlet
UNPWRD – Unpowered convenience outlet

Table 7 - (cont.) ELECTRIC HEAT - ELECTRICAL DATA 8.5 TONS

UNIT	NOM. V–PH–HZ	IFM TYPE	ELECTRIC HEATER PART NUMBER CRHEATERXXXXXX	NOM PWR (kW)	APP PWR (kW)	SINGLE POINT KIT PART NUMBER CRSINGLEXXXXXX			
						WITHOUT C.O. or UNPWRD C.O.		WITH PWRD C.O.	
						WITHOUT P.E.	WITH P.E.	WITHOUT P.E.	WITH P.E.
50TCQD09 (2–STAGE COOL)	208/230–3–60	STD	117A00	10.4	7.8/9.6	049A00	049A00	049A00	049A00
			110A00	16.0	12.0/14.7	049A00	049A00	049A00	049A00
			111A00	24.8	18.6/22.8	051A00	051A00	051A00	051A00
			112A00	32.0	24.0/29.4	051A00	051A00	051A00	051A00
			112A00,117A00	42.4	31.8/38.9	053A00	053A00	053A00	053A00
		MED	117A00	10.4	7.8/9.6	049A00	049A00	049A00	049A00
			110A00	16.0	12.0/14.7	049A00	049A00	049A00	049A00
			111A00	24.8	18.6/22.8	051A00	051A00	051A00	051A00
			112A00	32.0	24.0/29.4	051A00	051A00	051A00	051A00
			112A00,117A00	42.4	31.8/38.9	053A00	053A00	053A00	053A00
		HIGH	117A00	10.4	7.8/9.6	049A00	049A00	049A00	049A00
			110A00	16.0	12.0/14.7	049A00	049A00	049A00	049A00
			111A00	24.8	18.6/22.8	051A00	051A00	051A00	051A00
			112A00	32.0	24.0/29.4	051A00	051A00	051A00	051A00
			112A00,117A00	42.4	31.8/38.9	053A00	053A00	053A00	053A00
	460–3–60	STD	116A00	13.9	12.8	047A00	047A00	047A00	047A00
			113A00	16.5	15.2	047A00	047A00	047A00	047A00
			114A00	27.8	25.5	050A00	050A00	050A00	050A00
			115A00	33.0	30.3	050A00	050A00	050A00	050A00
			114A00,116A00	41.7	38.3	052A00	052A00	052A00	052A00
		MED	116A00	13.9	12.8	047A00	047A00	047A00	047A00
			113A00	16.5	15.2	047A00	047A00	047A00	047A00
			114A00	27.8	25.5	050A00	050A00	050A00	050A00
			115A00	33.0	30.3	050A00	050A00	050A00	050A00
			114A00,116A00	41.7	38.3	052A00	052A00	052A00	052A00
		HIGH	116A00	13.9	12.8	047A00	047A00	047A00	047A00
			113A00	16.5	15.2	047A00	047A00	047A00	047A00
			114A00	27.8	25.5	050A00	050A00	050A00	050A00
			115A00	33.0	30.3	050A00	050A00	050A00	050A00
			114A00,116A00	41.7	38.3	052A00	052A00	052A00	052A00
	575–3–60	STD	118A00	17.0	17.0	047A00	047A00	047A00	047A00
			119A00	34.0	34.0	050A00	050A00	050A00	050A00
		MED	118A00	17.0	17.0	047A00	047A00	047A00	047A00
			119A00	34.0	34.0	050A00	050A00	050A00	050A00
		HIGH	118A00	17.0	17.0	047A00	047A00	047A00	047A00
			119A00	34.0	34.0	050A00	050A00	050A00	050A00

– No Single Point Kit required

LEGEND

APP PWR – 208 / 230V / 460V / 575V
C.O. – Convenience outlet
FLA – Full load amps
IFM – Indoor fan motor
NOM PWR – 240V / 480V / 600V
P.E. – Power exhaust
PWRD – Powered convenience outlet
UNPWRD – Unpowered convenience outlet

Table 7 - (cont.) ELECTRIC HEAT - ELECTRICAL DATA **10 TONS**

UNIT	NOM. V–PH–HZ	IFM TYPE	ELECTRIC HEATER PART NUMBER CRHEATERXXXXXX	NOM PWR (kW)	APP PWR (kW)	SINGLE POINT KIT PART NUMBER CRSINGLEXXXXXX			
						WITHOUT C.O. or UNPWRD C.O.		WITH PWRD C.O.	
						WITHOUT P.E.	WITH P.E.	WITHOUT P.E.	WITH P.E.
50TCQD12 (2–STAGE COOL)	208/230–3–60	STD	117A00	10.4	7.8/9.6	049A00	049A00	049A00	049A00
			110A00	16.0	12.0/14.7	049A00	049A00	049A00	049A00
			112A00	32.0	24.0/29.4	051A00	051A00	051A00	051A00
			112A00,117A00	42.4	31.8/38.9	053A00	053A00	053A00	053A00
			112A00,110A00	50.0	37.6/45.9	053A00	053A00	053A00	053A00
		MED	117A00	10.4	7.8/9.6	049A00	049A00	051A00	051A00
			110A00	16.0	12.0/14.7	049A00	049A00	051A00	051A00
			112A00	32.0	24.0/29.4	051A00	051A00	053A00	053A00
			112A00,117A00	42.4	31.8/38.9	053A00	053A00	054A00	054A00
			112A00,110A00	50.0	37.6/45.9	053A00	053A00	054A00	054A00
		HIGH	117A00	10.4	7.8/9.6	051A00	051A00	051A00	051A00
			110A00	16.0	12.0/14.7	051A00	051A00	051A00	051A00
			112A00	32.0	24.0/29.4	053A00	053A00	053A00	053A00
			112A00,117A00	42.4	31.8/38.9	054A00	054A00	054A00	054A00
			112A00,110A00	50.0	37.6/45.9	054A00	054A00	054A00	054A00
	460–3–60	STD	116A00	13.9	12.8	047A00	047A00	047A00	047A00
			113A00	16.5	15.2	047A00	047A00	047A00	047A00
			115A00	33.0	30.3	050A00	050A00	050A00	050A00
			114A00,116A00	41.7	38.3	052A00	052A00	052A00	052A00
			115A00,113A00	50.0	45.9	052A00	052A00	052A00	052A00
		MED	116A00	13.9	12.8	047A00	047A00	047A00	047A00
			113A00	16.5	15.2	047A00	047A00	047A00	047A00
			115A00	33.0	30.3	050A00	050A00	050A00	050A00
			114A00,116A00	41.7	38.3	052A00	052A00	052A00	052A00
			115A00,113A00	50.0	45.9	052A00	052A00	052A00	052A00
		HIGH	116A00	13.9	12.8	047A00	047A00	047A00	047A00
			113A00	16.5	15.2	047A00	047A00	047A00	047A00
			115A00	33.0	30.3	050A00	050A00	050A00	050A00
			114A00,116A00	41.7	38.3	052A00	052A00	052A00	052A00
			115A00,113A00	50.0	45.9	052A00	052A00	052A00	052A00
	575–3–60	STD	118A00	17.0	17.0	047A00	047A00	047A00	047A00
			119A00	34.0	34.0	050A00	050A00	050A00	050A00
			118A00,119A00	51.0	51.0	052A00	052A00	052A00	052A00
		MED	118A00	17.0	17.0	047A00	047A00	047A00	047A00
			119A00	34.0	34.0	050A00	050A00	050A00	050A00
			118A00,119A00	51.0	51.0	052A00	052A00	052A00	052A00
		HIGH	118A00	17.0	17.0	047A00	047A00	047A00	047A00
			119A00	34.0	34.0	050A00	050A00	050A00	050A00
			118A00,119A00	51.0	51.0	052A00	052A00	052A00	052A00

– No Single Point Kit required

LEGEND

APP PWR – 208 / 230V / 460V / 575V
C.O. – Convenience outlet
FLA – Full load amps
IFM – Indoor fan motor
NOM PWR – 240V / 480V / 600V
P.E. – Power exhaust
PWRD – Powered convenience outlet
UNPWRD – Unpowered convenience outlet

Table 7 - (cont.) ELECTRIC HEAT - ELECTRICAL DATA **12.5 TONS**

UNIT	NOM. V–PH–HZ	IFM TYPE	ELECTRIC HEATER PART NUMBER CRHEATERXXXXXX	NOM PWR (kW)	APP PWR (kW)	SINGLE POINT KIT PART NUMBER CRSINGLEXXXXXX			
						WITHOUT C.O. or UNPWRD C.O.		WITH PWRD C.O.	
						WITHOUT P.E.	WITH P.E.	WITHOUT P.E.	WITH P.E.
50TCQD14 (2–STAGE COOL)	208/230–3–60	STD	291A00	16.5	12.4/15.2	051A00	051A00	051A00	051A00
			288A00,291A00	26.5	19.9/24.3	053A00	053A00	053A00	053A00
			294A00	33.5	25.2/30.8	053A00	053A00	053A00	053A00
			288A00,294A00	43.5	32.7/40.0	054A00	054A00	054A00	054A00
			291A00,294A00	50.0	37.6/45.9	054A00	054A00	054A00	054A00
		MED	291A00	16.5	12.4/15.2	051A00	051A00	051A00	051A00
			288A00,291A00	26.5	19.9/24.3	053A00	053A00	053A00	053A00
			294A00	33.5	25.2/30.8	053A00	053A00	053A00	053A00
			288A00,294A00	43.5	32.7/40.0	054A00	054A00	054A00	054A00
			291A00,294A00	50.0	37.6/45.9	054A00	054A00	054A00	054A00
			291A00	16.5	12.4/15.2	051A00	051A00	051A00	051A00
		HIGH	288A00,291A00	26.5	19.9/24.3	053A00	053A00	053A00	053A00
			294A00	33.5	25.2/30.8	053A00	053A00	053A00	053A00
			288A00,294A00	43.5	32.7/40.0	054A00	054A00	054A00	054A00
			291A00,294A00	50.0	37.6/45.9	054A00	054A00	054A00	054A00
	460–3–60	STD	292A00	16.5	15.2	047A00	047A00	047A00	047A00
			289A00,292A00	26.5	24.3	050A00	050A00	050A00	050A00
			295A00	33.5	30.8	050A00	050A00	050A00	050A00
			289A00,295A00	43.5	40.0	052A00	052A00	052A00	052A00
			292A00,295A00	50.0	45.9	052A00	052A00	052A00	052A00
		MED	292A00	16.5	15.2	047A00	047A00	047A00	047A00
			289A00,292A00	26.5	24.3	050A00	050A00	050A00	050A00
			295A00	33.5	30.8	050A00	050A00	050A00	050A00
			289A00,295A00	43.5	40.0	052A00	052A00	052A00	052A00
			292A00,295A00	50.0	45.9	052A00	052A00	052A00	052A00
		HIGH	292A00	16.5	15.2	047A00	050A00	050A00	050A00
			289A00,292A00	26.5	24.3	050A00	050A00	050A00	050A00
			295A00	33.5	30.8	050A00	050A00	050A00	050A00
			289A00,295A00	43.5	40.0	052A00	052A00	052A00	052A00
			292A00,295A00	50.0	45.9	052A00	052A00	052A00	052A00
	575–3–60	STD	293A00	16.5	15.2	047A00	047A00	047A00	047A00
			290A00,293A00	26.5	24.3	047A00	047A00	047A00	050A00
			296A00	33.5	30.8	050A00	050A00	050A00	050A00
			290A00,296A00	43.5	40.0	052A00	052A00	052A00	052A00
			293A00,296A00	50.0	45.9	052A00	052A00	052A00	052A00
		MED	293A00	16.5	15.2	047A00	047A00	047A00	047A00
			290A00,293A00	26.5	24.3	047A00	047A00	047A00	050A00
			296A00	33.5	30.8	050A00	050A00	050A00	050A00
			290A00,296A00	43.5	40.0	052A00	052A00	052A00	052A00
			293A00,296A00	50.0	45.9	052A00	052A00	052A00	052A00
		HIGH	293A00	16.5	15.2	047A00	047A00	047A00	047A00
			290A00,293A00	26.5	24.3	047A00	050A00	050A00	050A00
			296A00	33.5	30.8	050A00	050A00	050A00	050A00
			290A00,296A00	43.5	40.0	052A00	052A00	052A00	052A00
			293A00,296A00	50.0	45.9	052A00	052A00	052A00	052A00

– No Single Point Kit required

LEGEND

APP PWR – 208 / 230V / 460V / 575V
C.O. – Convenience outlet
FLA – Full load amps
IFM – Indoor fan motor
NOM PWR – 240V / 480V / 600V
P.E. – Power exhaust
PWRD – Powered convenience outlet
UNPWRD – Unpowered convenience outlet

WEIGHTS & DIMENSIONS

NOTES:

1. DIMENSIONS ARE IN INCHES, DIMENSIONS IN [ ] ARE IN MILLIMETERS.
2. CENTER OF GRAVITY
3. DIRECTION OF AIR FLOW

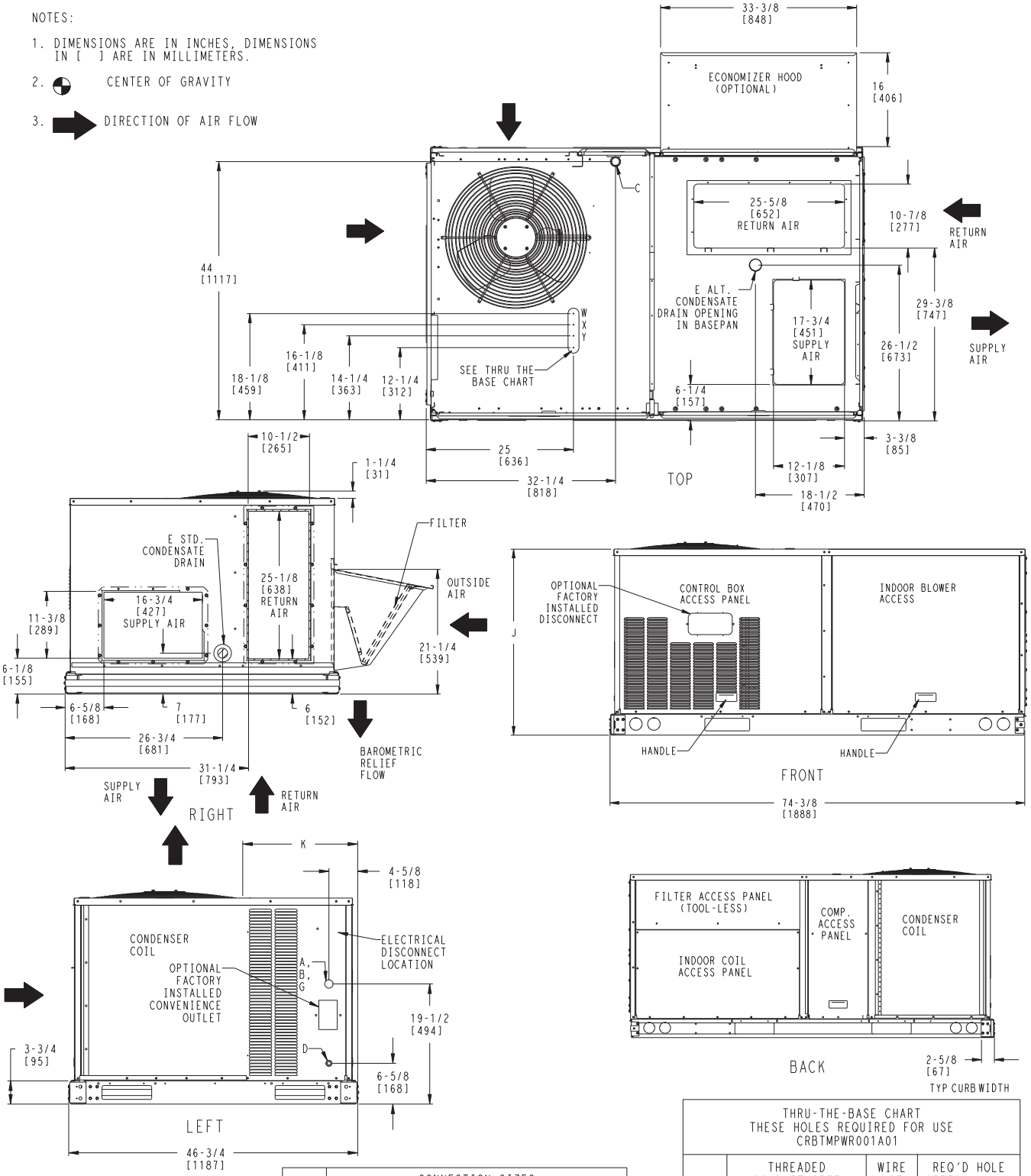

UNIT	J	K
50TCQA04	33 3/8 [847]	18 5/8 [472]
50TCQA05	33 3/8 [847]	14 7/8 [377]
50TCQA06	41 3/8 [1051]	14 7/8 [377]
50TCQA07	41 3/8 [1051]	14 7/8 [377]

	CONNECTION SIZES
A	1 3/8" [35] DIA FIELD POWER SUPPLY HOLE
B	2" [51] DIA POWER SUPPLY KNOCKOUT
C	1 3/4" [44] DIA GAUGE ACCESS PLUG
D	7/8" [22] DIA FIELD CONTROL WIRING HOLE
E	3/4"-14 NPT CONDENSATE DRAIN
G	2 1/2 " [64] DIA POWER SUPPLY KNOCK-OUT

THRU-THE-BASE CHART THESE HOLES REQUIRED FOR USE CRBTMPWR001A01			
	THREADED CONDUIT SIZE	WIRE USE	REQ'D HOLE SIZES (MAX.)
W	1/2"	ACC.	7/8" [22.2]
X	1/2"	24V	7/8" [22.2]
Y *	3/4" (001)	POWER	1 1/8" [28.4]
	FOR "THRU-THE-BASEPAN" FACTORY OPTION, FITTINGS FOR ONLY X & Y ARE PROVIDED		
*	SELECT EITHER 3/4" OR 1/2" FOR POWER, DEPENDING ON WIRE SIZE		

C09016

Fig. 1 - Dimensions 50TCQ 04-07

WEIGHTS & DIMENSIONS (cont.)

UNIT	STD. UNIT WEIGHT		CORNER WEIGHT (A)		CORNER WEIGHT (B)		CORNER WEIGHT (C)		CORNER WEIGHT (D)		C.G.		HEIGHT
	LBS.	KG.	LBS.	KG.	LBS.	KG.	LBS.	KG.	LBS.	KG.	X	Y	Z
50TCQA04	505	229	136	62	130	59	117	53	123	56	36 1/4 [921]	22 1/8 [562]	16 3/8 [416]
50TCQA05	510	231	138	63	131	59	118	54	124	56	36 1/4 [921]	22 1/8 [562]	16 1/2 [419]
50TCQA06	590	268	159	72	146	66	137	62	149	68	35 5/8 [905]	22 5/8 [575]	20 1/8 [511]
50TCQA07	630	286	166	75	166	75	149	68	149	68	37 1/4 [946]	22 1/8 [562]	20 3/4 [527]

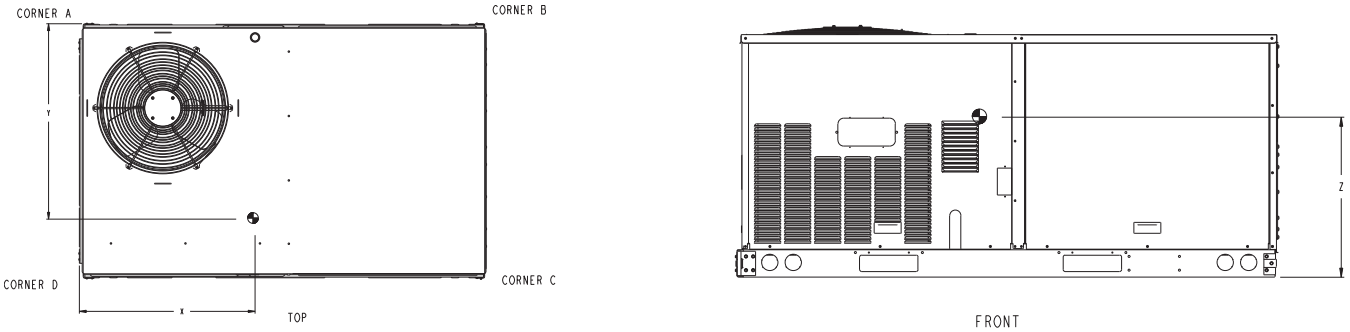

C09017

Fig. 2 - Dimensions 50TCQ 04-07

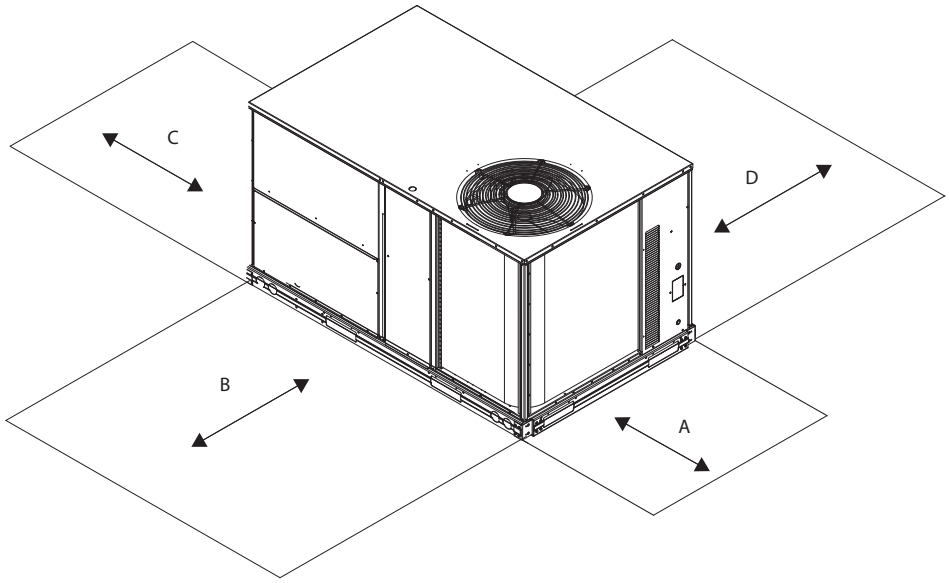

C08337

Fig. 3 - Service Clearance

LOC	DIMENSION	CONDITION
A	48–in. (1219 mm)	Unit disconnect is mounted on panel
	18–in. (457 mm)	No disconnect, convenience outlet option
	18–in. (457 mm)	Recommended service clearance
	12–in. (305 mm)	Minimum clearance
B	42–in. (1067 mm)	Surface behind servicer is grounded (e.g., metal, masonry wall)
	36–in. (914 mm)	Surface behind servicer is electrically non–conductive (e.g., wood, fiberglass)
	Special	Check for sources of flue products within 10–ft of unit fresh air intake hood
C	36–in. (914 mm)	Side condensate drain is used
	18–in. (457 mm)	Minimum clearance
D	42–in. (1067 mm)	Surface behind servicer is grounded (e.g., metal, masonry wall, another unit)
	36–in. (914 mm)	Surface behind servicer is electrically non–conductive (e.g., wood, fiberglass)

WEIGHTS & DIMENSIONS (cont.)

ROOFCURB ACCESSORY	A	UNIT SIZE
CRRFCURB001A02	1' - 2" [356]	50TCQA04-07
CRRFCURB002A02	2' - 0" [610]	

NOTES:
1. ROOFCURB ACCESSORY IS SHIPPED DISASSEMBLED.
2. INSULATED PANELS: 1" THK. POLYURETHANE FOAM, 1-3/4 # DENSITY.
3. DIMENSIONS IN [ ] ARE IN MILLIMETERS.
4. ROOFCURB: 18 GAGE STEEL ON 14" CURB, AND 16 GAGE STEEL ON 24" CURB.
5. ATTACH DUCTWORK TO CURB. (FLANGES OF DUCT REST ON CURB)
6. SERVICE CLEARANCE 4' ON EACH SIDE.
7. ▨ DIRECTION OF AIR FLOW.
8. CONNECTOR PACKAGES CRBTMPWR001A01 AND 2A01 ARE FOR THRU-THE-CURB TYPE CONNECTIONS. PACKAGES CRBTMPWR003A01 AND 4A01 ARE FOR THE THRU-THE-BOTTOM TYPE CONNECTIONS.

CONNECTOR PKG. ACC.	B	C	D ALT DRAIN HOLE	POWER	CONTROL	ACCESSORY PWR
CRBTMPWR001A01 CRBTMPWR002A01	2'-8 7/16" [827]	1'-10 15/16" [583]	1 3/4" [44.5]	3/4" [19] NPT 1 1/4" [31.7]	1/2" [12.7] NPT	1/2" [12.7] NPT
CRBTMPWR003A01	↓	↓	↓	3/4" [19] NPT	↓	↓
CRBTMPWR004A01	↓	↓	↓	1 1/4" [31.7]	↓	↓

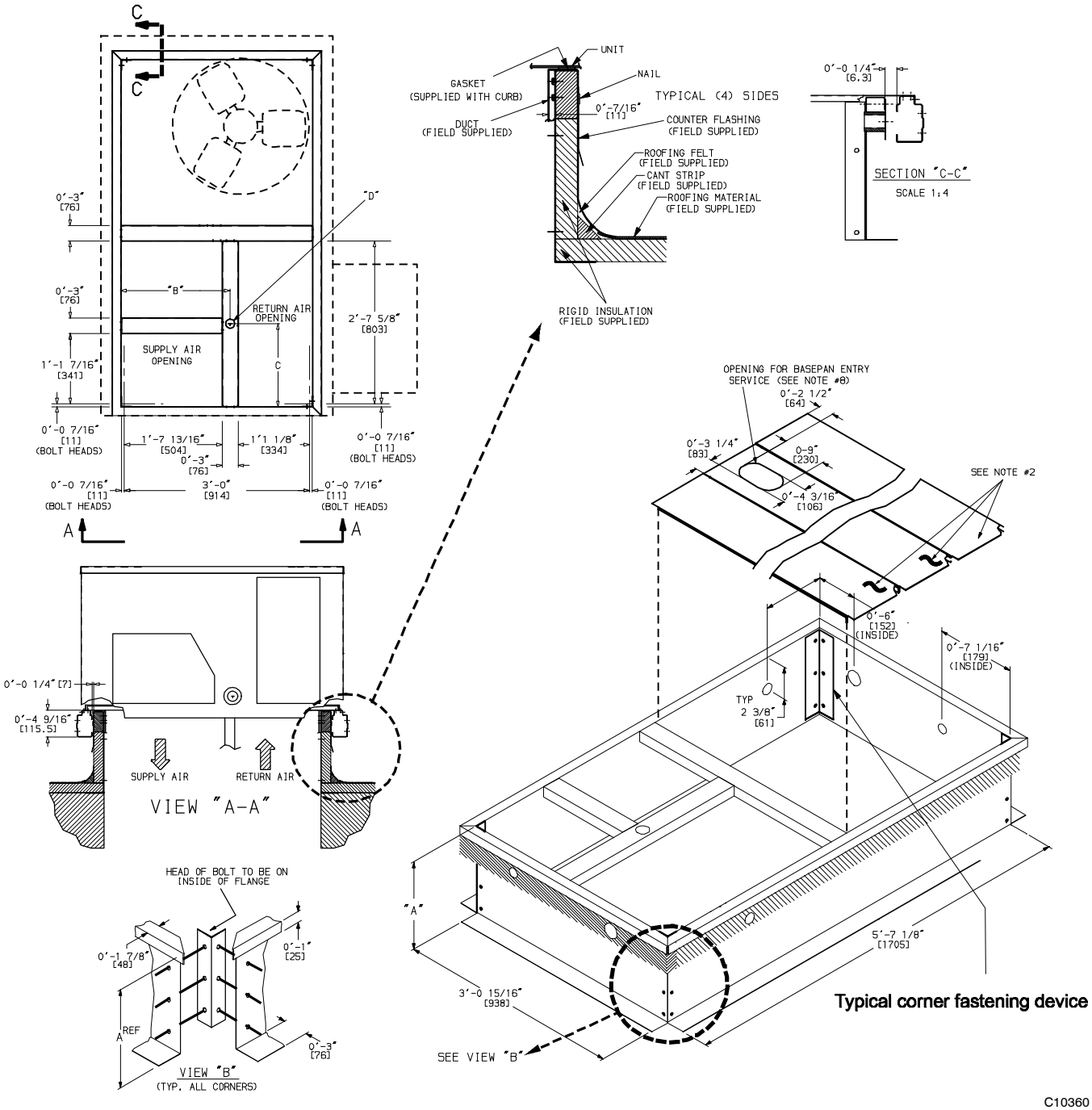

Fig. 4 - Curb Dimensions 50TCQ 04-07

Vertical Connections / Economizer

NOTES:

1. DIMENSIONS ARE IN INCHES, DIMENSIONS IN [ ] ARE IN MILLIMETERS.
2. CENTER OF GRAVITY
3. DIRECTION OF AIR FLOW

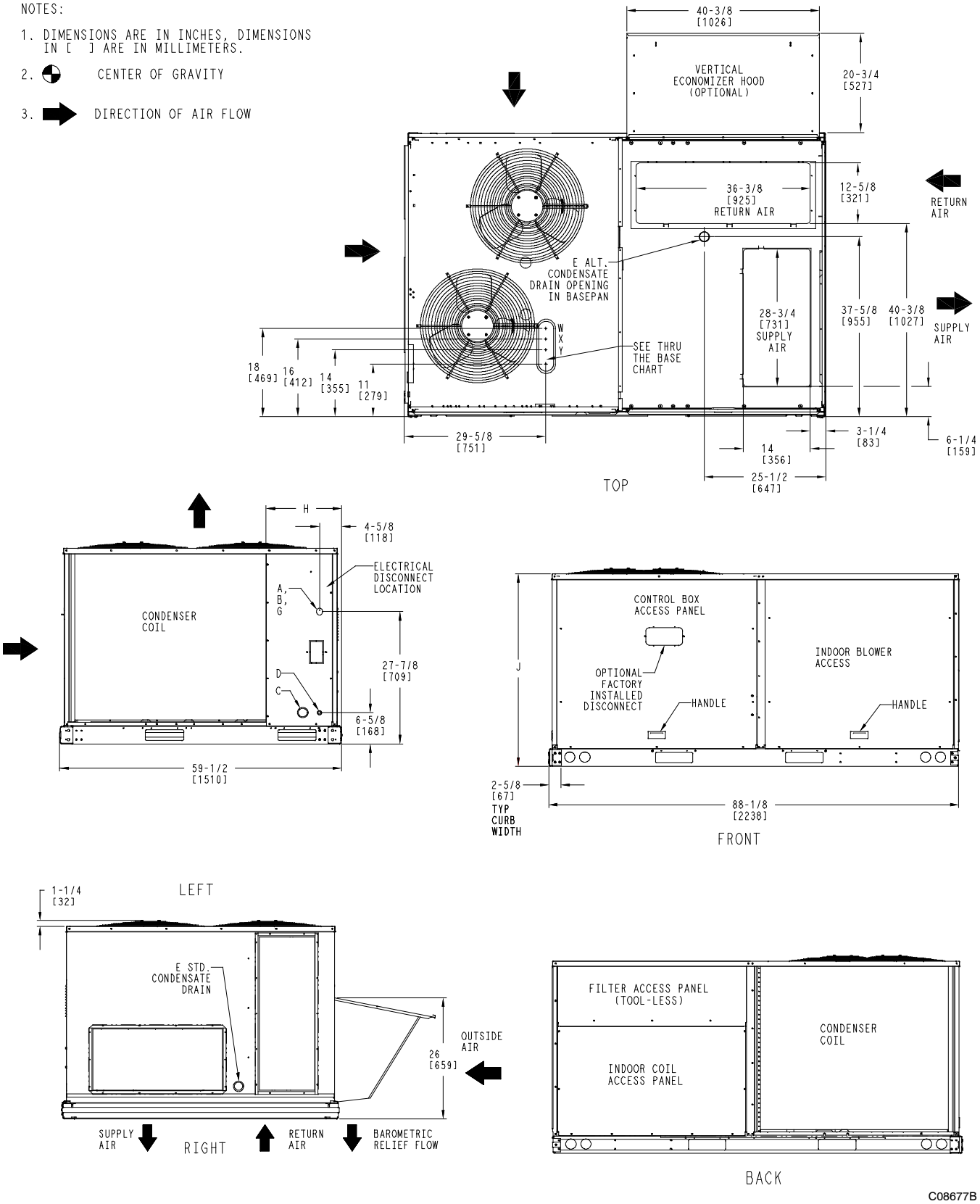

Fig. 5 – Dimensions 50TCQ 08-09

Horizontal Connections / Economizer

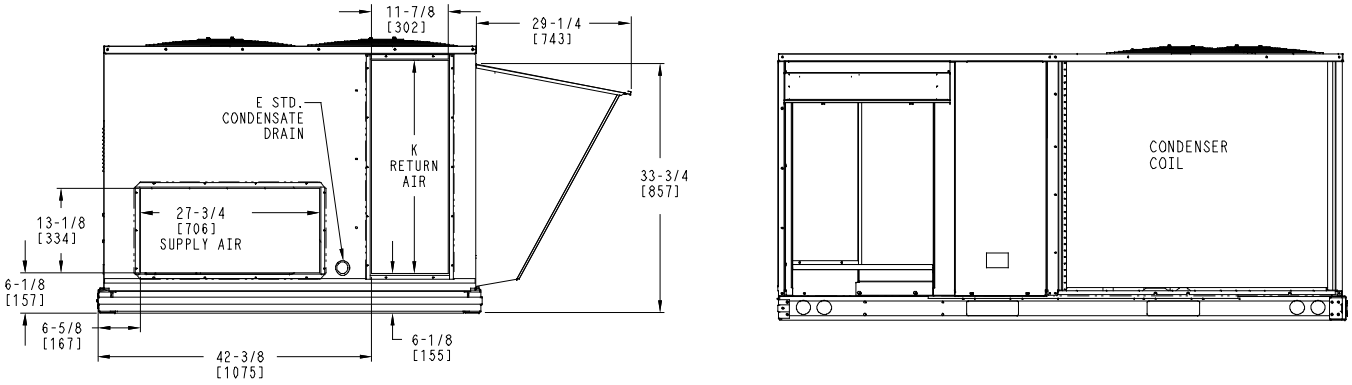

	CONNECTION SIZES
A	1 3/8" [35] DIA FIELD POWER SUPPLY HOLE
B	2 1/2" [64] DIA POWER SUPPLY KNOCKOUT
C	1 3/4" [51] DIA GAUGE ACCESS PLUG
D	7/8" [22] DIA FIELD CONTROL WIRING HOLE
E	3/4"-14 NPT CONDENSATE DRAIN
G	2 " [51] DIA POWER SUPPLY KNOCK-OUT

THRU-THE-BASE CHART THESE HOLES REQUIRED FOR USE CRBTMPWR002A01			
	THREADED CONDUIT SIZE	WIRE USE	REQ'D HOLE SIZES (MAX.)
W	1/2"	ACC.	7/8" [22.2]
X	1/2"	24V	7/8" [22.2]
Y	1 1/4" (002)	POWER	1 3/4" [44.4]
	FOR "THRU-THE-BASEPAN" FACTORY OPTION, FITTINGS FOR ONLY X & Y ARE PROVIDED		

UNIT	J	K	H
50TCQD08	49 3/8 [1253]	36 3/8 [924]	23 7/8 [609]
50TCQD09	49 3/8 [1253]	36 3/8 [924]	23 7/8 [609]

C10393

Fig. 6 - Dimensions 50TCQ 08-09

WEIGHTS & DIMENSIONS (cont.)

UNIT	STD. UNIT WEIGHT		CORNER WEIGHT (A)		CORNER WEIGHT (B)		CORNER WEIGHT (C)		CORNER WEIGHT (D)		C.G.		
	LBS.	KG.	LBS.	KG.	LBS.	KG.	LBS.	KG.	LBS.	KG.	X	Y	Z
50TCQD08	885	401	187	85	158	72	247	112	293	133	39 15/16 [1014]	35 1/4 [895]	23 1/2 [597]
50TCQD09	910	413	200	91	166	75	247	112	297	135	39 5/8 [1006]	34 1/2 [876]	23 1/2 [597]

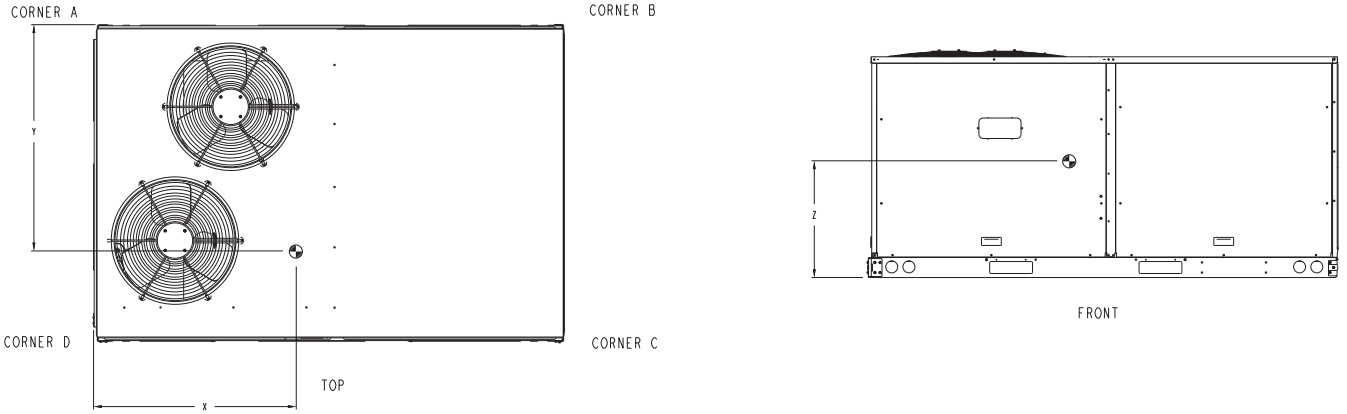

C08678

Fig. 7 - Dimensions 50TCQ 08-09

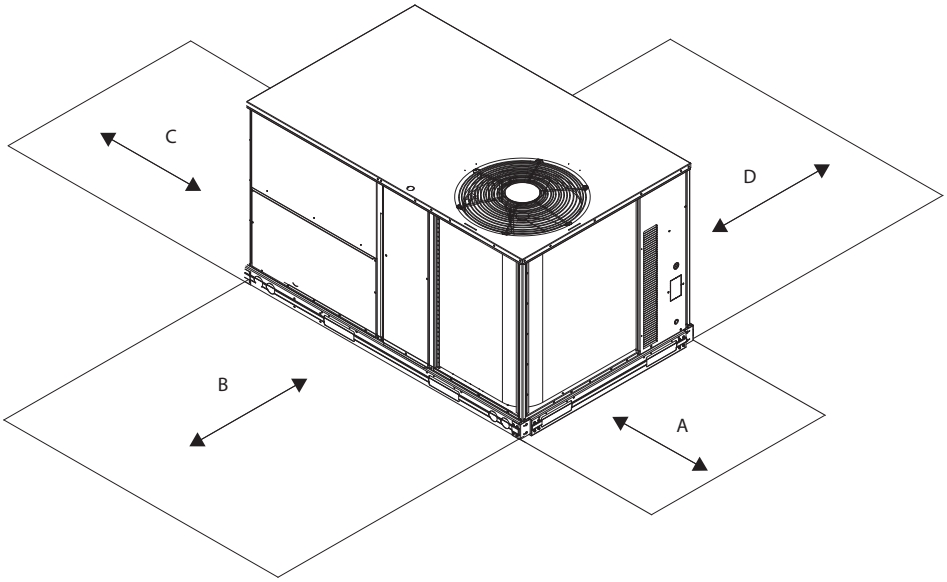

C08337

Fig. 8 - Service Clearance

LOC	DIMENSION	CONDITION
A	48–in. (1219 mm)	Unit disconnect is mounted on panel
	18–in. (457 mm)	No disconnect, convenience outlet option
	18–in. (457 mm)	Recommended service clearance
	12–in. (305 mm)	Minimum clearance
B	42–in. (1067 mm)	Surface behind servicer is grounded (e.g., metal, masonry wall)
	36–in. (914 mm)	Surface behind servicer is electrically non–conductive (e.g., wood, fiberglass)
	Special	Check for sources of flue products within 10–ft of unit fresh air intake hood
C	36–in. (914 mm)	Side condensate drain is used
	18–in. (457 mm)	Minimum clearance
D	42–in. (1067 mm)	Surface behind servicer is grounded (e.g., metal, masonry wall, another unit)
	36–in. (914 mm)	Surface behind servicer is electrically non–conductive (e.g., wood, fiberglass)

WEIGHTS & DIMENSIONS (cont.)

ROOFCURB ACCESSORY	A	UNIT SIZE
CRRFCURB003A01	1'-2" [356]	50TCQD08, 09
CRRFCURB004A01	2'-0" [610]	

NOTES:
1. ROOFCURB ACCESSORY IS SHIPPED DISASSEMBLED.
2. INSULATED PANELS: 1" THK. POLYURETHANE FOAM, 1-3/4 # DENSITY.
3. DIMENSIONS IN [ ] ARE IN MILLIMETERS.
4. ROOFCURB: 18 GAGE STEEL ON 14" CURB, AND 16 GAGE STEEL ON 24" CURB.
5. ATTACH DUCTWORK TO CURB. (FLANGES OF DUCT REST ON CURB)
6. SERVICE CLEARANCE 4' ON EACH SIDE.
7. ▨ DIRECTION OF AIR FLOW.
8. CONNECTOR PACKAGES CRBTMPWR001A01 AND 2A01 ARE FOR THRU-THE-CURB TYPE CONNECTIONS. PACKAGES CRBTMPWR003A01 AND 4A01 ARE FOR THE THRU-THE-BOTTOM TYPE CONNECTIONS.

CONNECTOR PKG. ACC.	B	C	D ALT DRAIN HOLE	POWER	CONTROL	ACCESSORY PWR
CRBTMPWR001A01 CRBTMPWR002A01	2'-8 7/16" [827]	1'-10 15/16" [583]	1 3/4" [44.5]	3/4" [19] NPT 1 1/4" [31.7]	1/2" [12.7] NPT	1/2" [12.7] NPT
CRBTMPWR003A01	↓	↓	↓	3/4" [19] NPT	↓	↓
CRBTMPWR004A01	↓	↓	↓	1 1/4" [31.7]	↓	↓

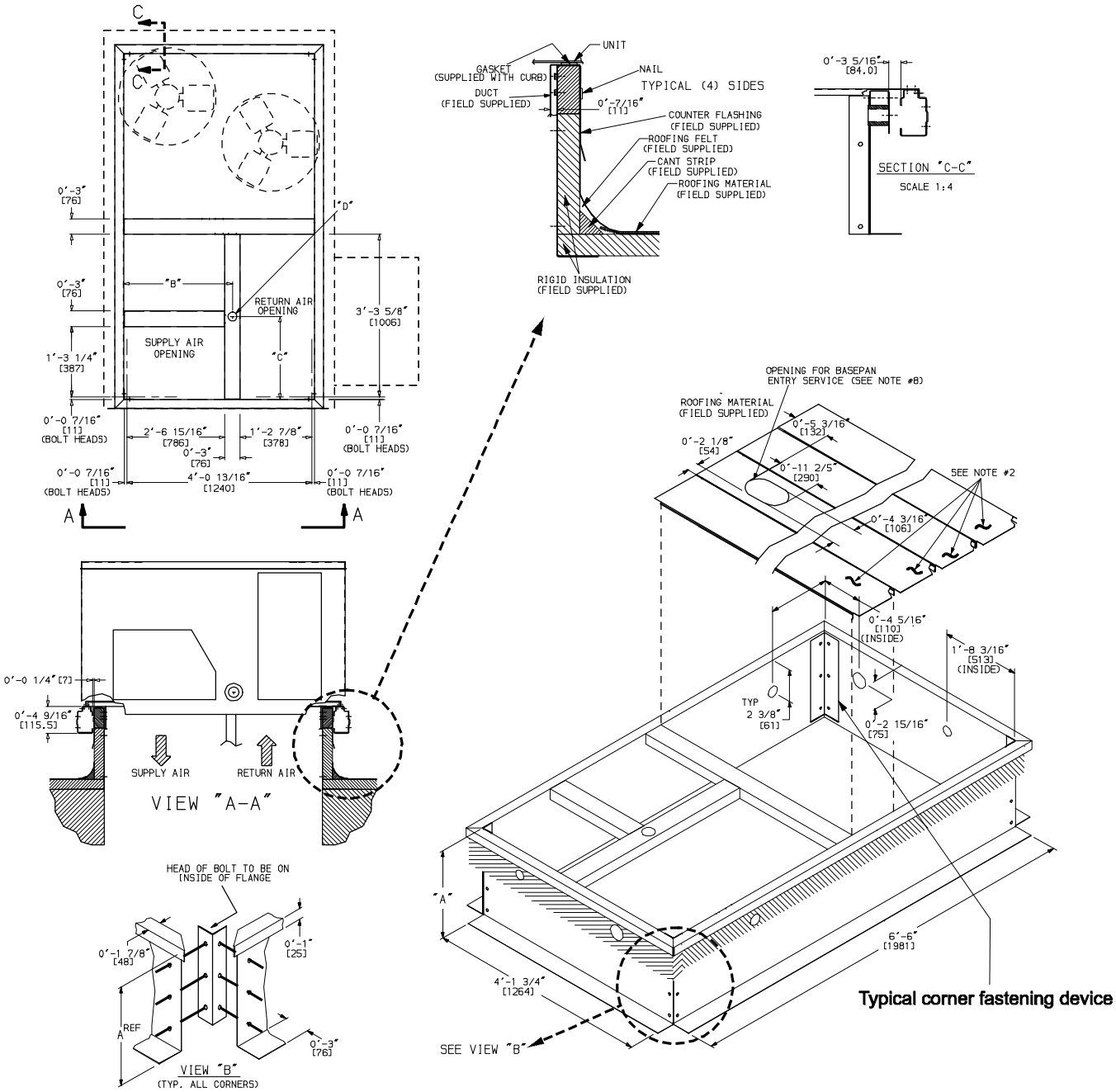

Fig. 9 - Curb Dimensions 50TCQ 08-09

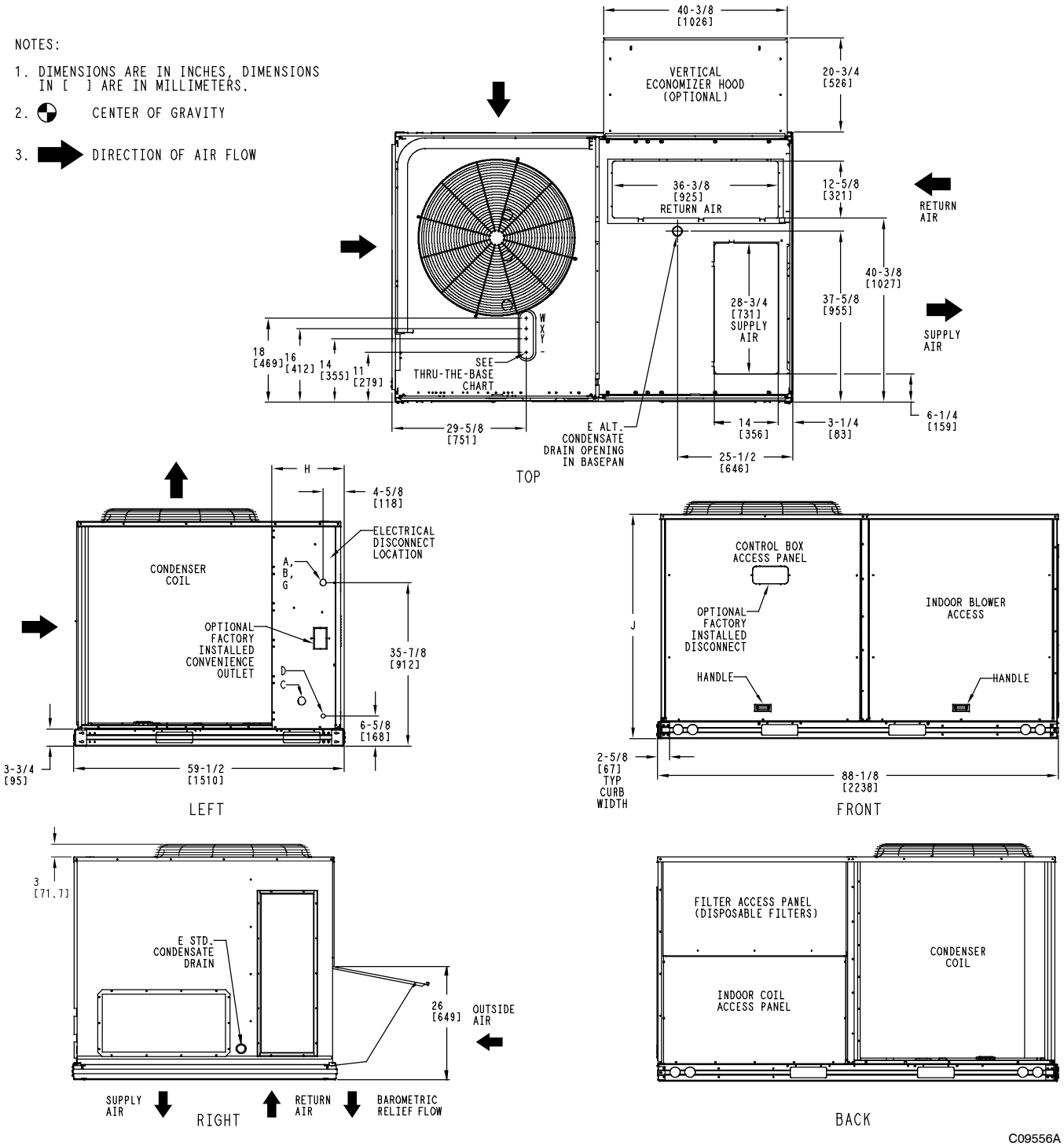

Fig. 10 – Dimensions 50TCQ 12

Horizontal Connections / Economizer

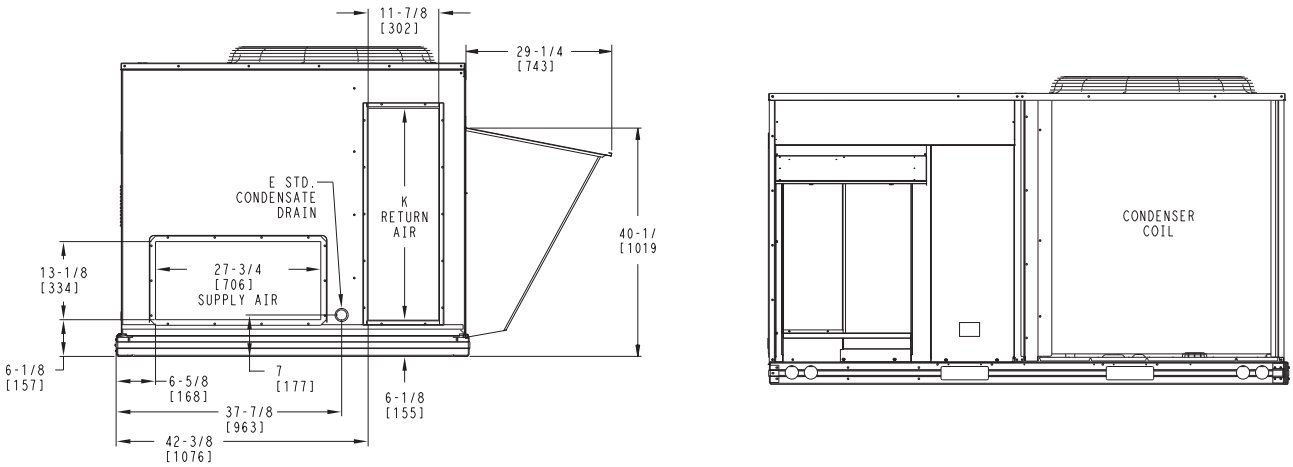

	CONNECTION SIZES
A	1 3/8" [35] DIA FIELD POWER SUPPLY HOLE
B	2 1/2" [64] DIA POWER SUPPLY KNOCKOUT
C	1 3/4" [51] DIA GAUGE ACCESS PLUG
D	7/8" [22] DIA FIELD CONTROL WIRING HOLE
E	3/4"-14 NPT CONDENSATE DRAIN
G	2" [51] DIA POWER SUPPLY KNOCK-OUT

THRU-THE-BASE CHART THESE HOLES REQUIRED FOR USE CRBTMPWR002A01			
	THREADED CONDUIT SIZE	WIRE USE	REQ'D HOLE SIZES (MAX.)
W	1/2"	ACC.	7/8" (22.2)
X	1/2"	24V	7/8" (22.2)
Y	1 1/4" (002)	POWER	1 3/4" (44.4)
	FOR "THRU-THE-BASEPAN" FACTORY OPTION, FITTINGS FOR ONLY X & Y ARE PROVIDED		

UNIT	H	J	K
50TCQD12	15 7/8 [403]	49 3/8 [1253]	36 3/8 [924]

C10409

Fig. 11 - Dimensions 50TCQ 12

WEIGHTS & DIMENSIONS (cont.)

UNIT	STD. UNIT WEIGHT*		CORNER WEIGHT (A)		CORNER WEIGHT (B)		CORNER WEIGHT (C)		CORNER WEIGHT (D)		C.G.		
	LBS.	KG.	LBS.	KG.	LBS.	KG.	LBS.	KG.	LBS.	KG.	X	Y	Z
50TCQD12	1050	476	284	129	201	91	234	106	331	150	36 1/2 [927]	32 [813]	23 1/2 [597]

* STANDARD UNIT WEIGHT IS WITHOUT ELECTRIC HEAT AND WITHOUT PACKAGING.
FOR OPTIONS AND ACCESSORIES REFER TO THE PRODUCT DATA CATALOG.

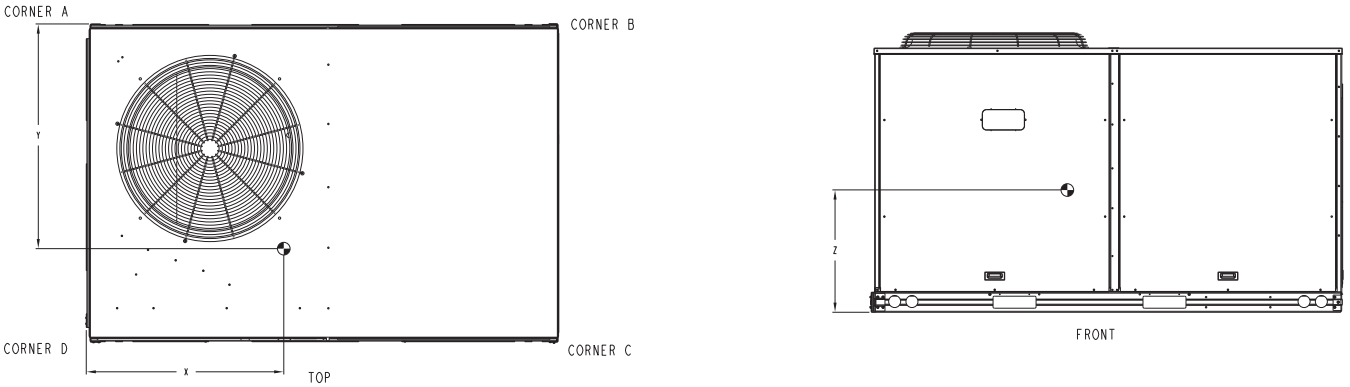

C09557A

Fig. 12 – Dimensions 50TCQ 12

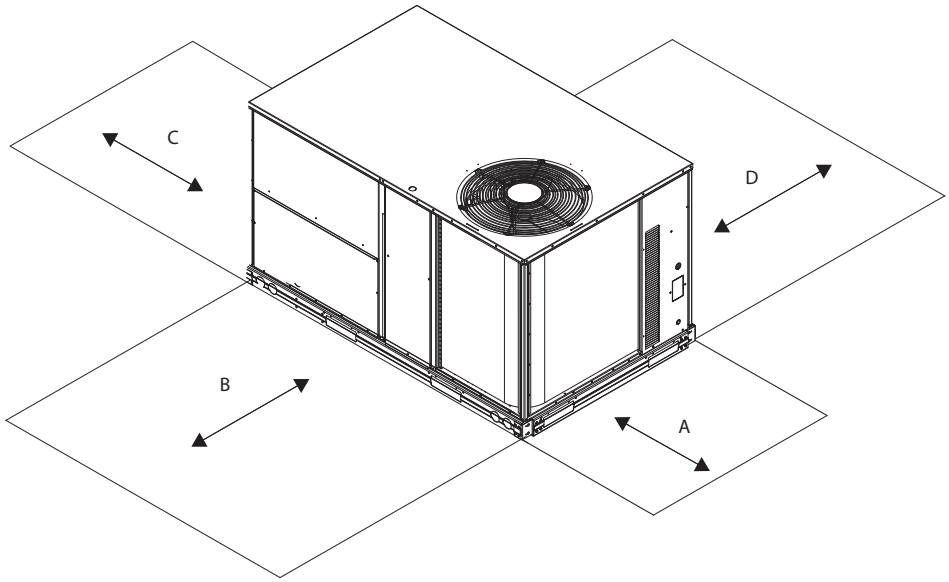

C08337

Fig. 13 – Service Clearance

LOC	DIMENSION	CONDITION
A	48–in. (1219 mm)	Unit disconnect is mounted on panel
	18–in. (457 mm)	No disconnect, convenience outlet option
	18–in. (457 mm)	Recommended service clearance
	12–in. (305 mm)	Minimum clearance
B	42–in. (1067 mm)	Surface behind servicer is grounded (e.g., metal, masonry wall)
	36–in. (914 mm)	Surface behind servicer is electrically non–conductive (e.g., wood, fiberglass)
	Special	Check for sources of flue products within 10–ft of unit fresh air intake hood
C	36–in. (914 mm)	Side condensate drain is used
	18–in. (457 mm)	Minimum clearance
D	42–in. (1067 mm)	Surface behind servicer is grounded (e.g., metal, masonry wall, another unit)
	36–in. (914 mm)	Surface behind servicer is electrically non–conductive (e.g., wood, fiberglass)

WEIGHTS & DIMENSIONS (cont.)

ROOFCURB ACCESSORY	A	UNIT SIZE
CRRFCURB003A01	1' - 2" [356]	50TCQD12
CRRFCURB004A01	2' - 0" [610]	

NOTES:
1. ROOFCURB ACCESSORY IS SHIPPED DISASSEMBLED.
2. INSULATED PANELS: 1" THK. POLYURETHANE FOAM, 1-3/4 # DENSITY.
3. DIMENSIONS IN [ ] ARE IN MILLIMETERS.
4. ROOFCURB: 18 GAGE STEEL ON 14" CURB, AND 16 GAGE STEEL ON 24" CURB.
5. ATTACH DUCTWORK TO CURB. (FLANGES OF DUCT REST ON CURB)
6. SERVICE CLEARANCE 4' ON EACH SIDE.
7. ▨ DIRECTION OF AIR FLOW.
8. CONNECTOR PACKAGES CRBTMPWR001A01 AND 2A01 ARE FOR THRU-THE-CURB TYPE CONNECTIONS. PACKAGES CRBTMPWR003A01 AND 4A01 ARE FOR THE THRU-THE-BOTTOM TYPE CONNECTIONS.

CONNECTOR PKG. ACC.	B	C	D ALT DRAIN HOLE	POWER	CONTROL	ACCESSORY PWR
CRBTMPWR001A01 CRBTMPWR002A01	2'-8 7/16" [827]	1'-10 15/16" [583]	1 3/4" [44.5]	3/4" [19] NPT 1 1/4" [31.7]	1/2" [12.7] NPT	1/2" [12.7] NPT
CRBTMPWR003A01	↓	↓	↓	3/4" [19] NPT	↓	↓
CRBTMPWR004A01	↓	↓	↓	1 1/4" [31.7]	↓	↓

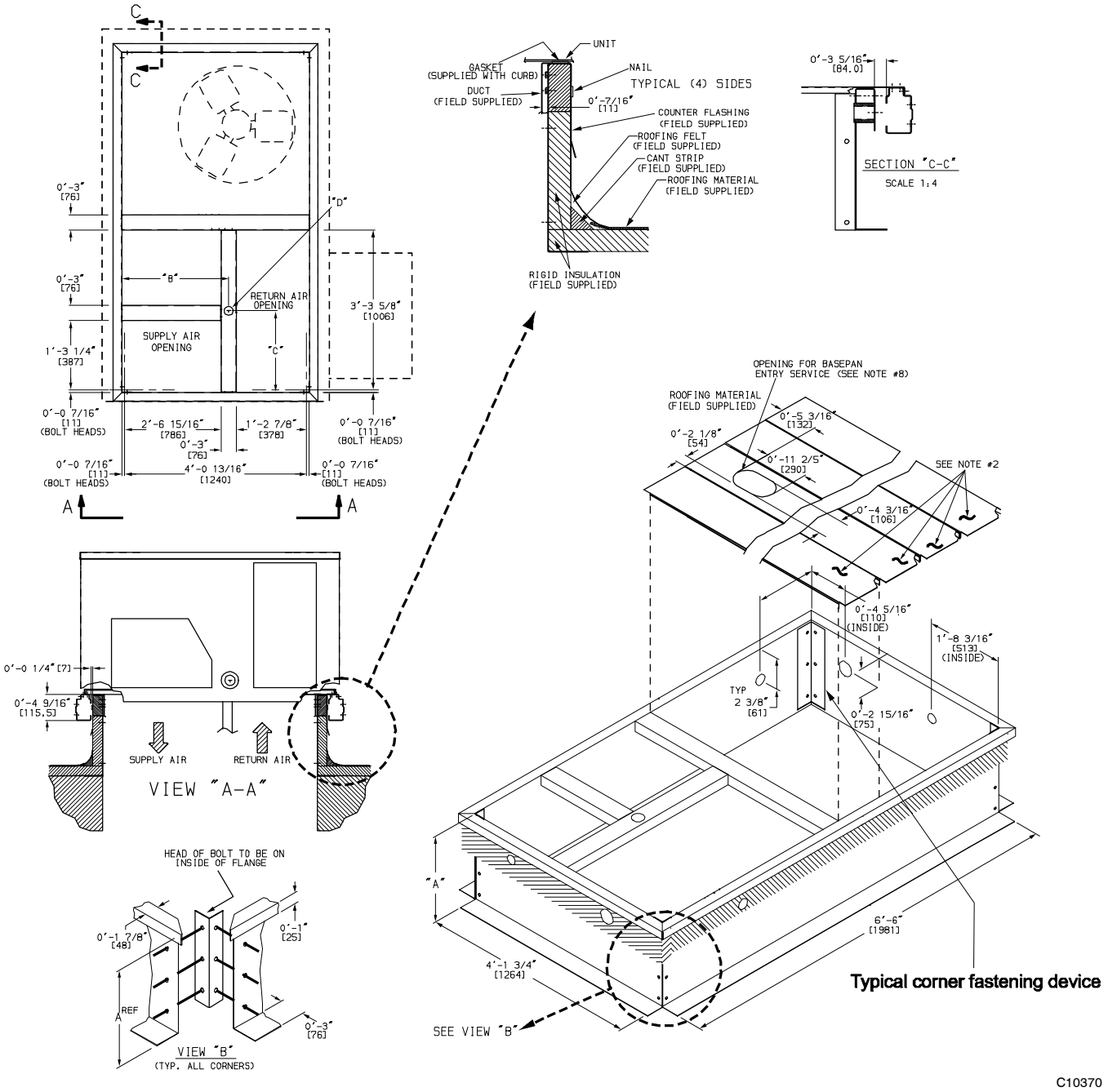

Fig. 14 - Curb Dimensions 50TCQ 12

Vertical Connections / Economizer

NOTES:

1. DIMENSIONS ARE IN INCHES, DIMENSIONS IN [ ] ARE IN MILLIMETERS.
2. CENTER OF GRAVITY
3. DIRECTION OF AIR FLOW

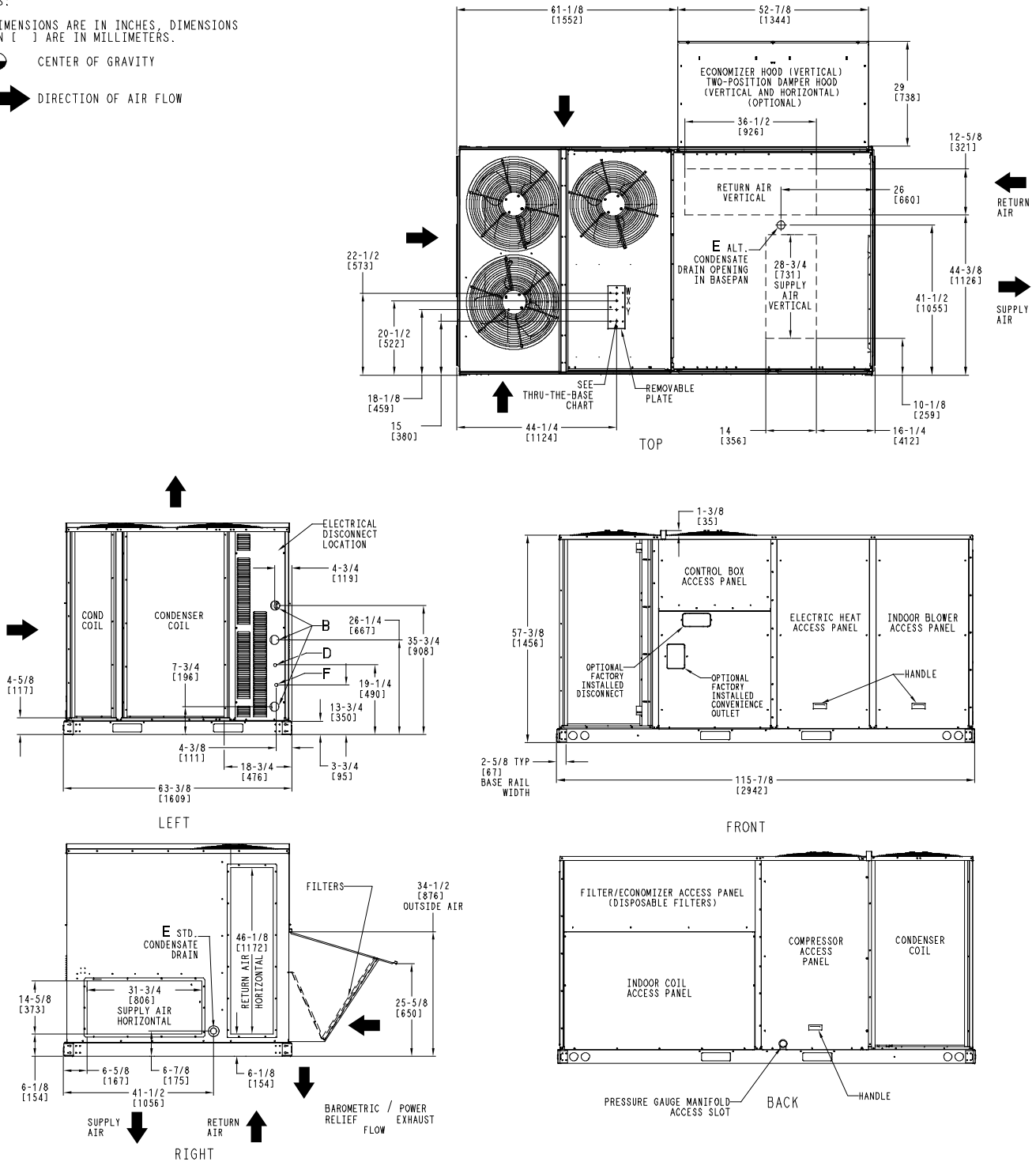

Fig. 15 – Dimensions 50TCQ 14

50TCQ

Horizontal Connections / Economizer

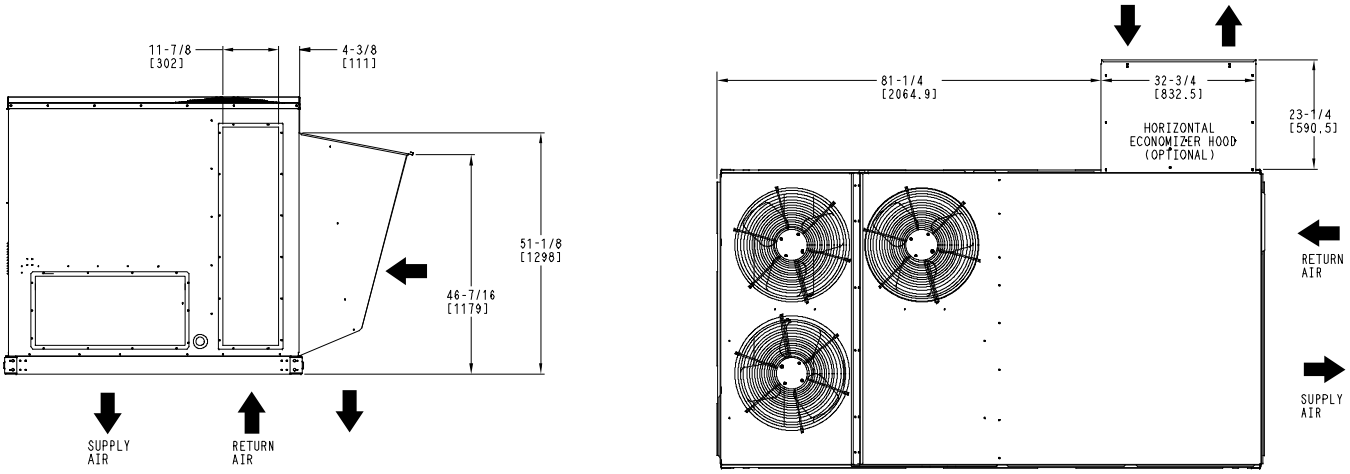

	CONNECTION SIZES
B	2 1/2" [64] DIA POWER SUPPLY HOLE
D	7/8" [22] DIA FIELD CONTROL WIRING HOLE
E	3/4"-14 NPT CONDENSATE DRAIN
F	7/8" [22] DIA FIELD CONVENIENCE OUTLET HOLE

THRU-THE-BASE CHART
THESE HOLES REQUIRED FOR USE
CRBTMPWR005A00,006A00,007A00

ACCESSORY NO.		THREADED CONDUIT SIZE	WIRE USE	REQ'D HOLE SIZES (MAX.)
005	W	1/2"	ACC.	7/8" [22.2]
	X	1/2"	24V	7/8" [22.2]
	Y	1 1/4"	POWER	1 1/2" [38.1]
006	W	1/2"	ACC.	7/8" [22.2]
	X	1/2"	24V	7/8" [22.2]
	Y	1 1/2"	POWER	2" [50.8]
007	W	1/2"	ACC.	7/8" [22.2]
	X	1/2"	24V	7/8" [22.2]
	Y	2"	POWER	2 1/2" [63.5]
	FOR "THRU-THE-BASEPAN" FACTORY OPTION, FITTINGS FOR X & Y ARE PROVIDED AS SPECIFIED ON "006".			

C09895A

Fig. 16 - Dimensions 50TCQ 14

WEIGHTS & DIMENSIONS (cont.)

UNIT	STD UNIT WEIGHT*		CORNER WEIGHT (A)		CORNER WEIGHT (B)		CORNER WEIGHT (C)		CORNER WEIGHT (D)		C.G.		
	LBS.	KG.	LBS.	KG.	LBS.	KG.	LBS.	KG.	LBS.	KG.	X	Y	Z
50TCQ14	1370	623	369	168	361	164	316	144	324	147	57 1/2 [1460]	29 1/2 [750]	24 [610]

*- STANDARD UNIT WEIGHT IS WITHOUT ELECTRIC HEAT AND WITHOUT PACKAGING.
FOR OTHER OPTIONS AND ACCESSORIES REFER TO THE PRODUCT DATA CATALOG.

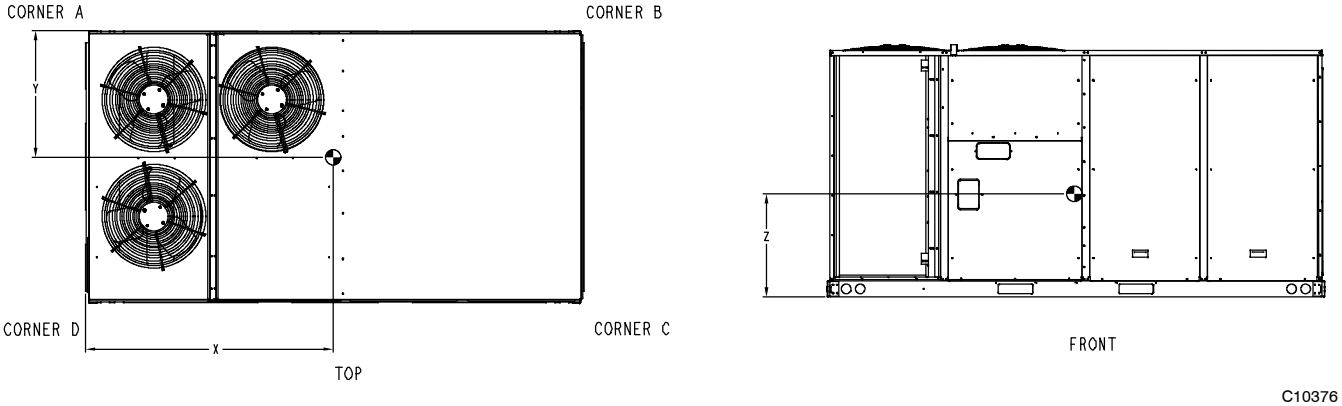

Fig. 17 - Dimensions 50TCQ 14

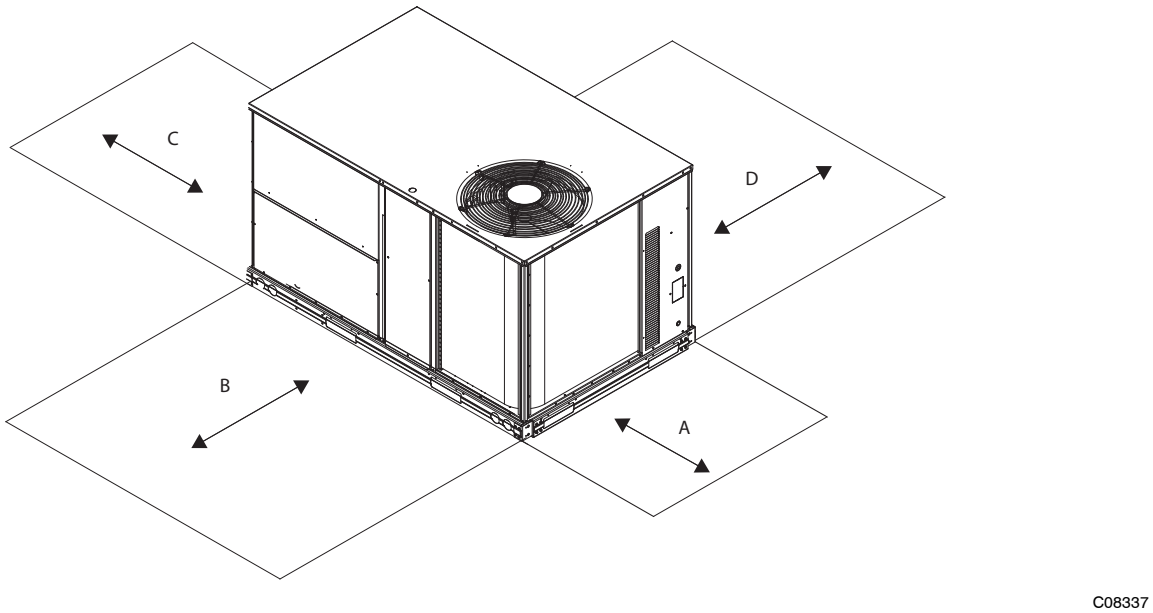

Fig. 18 - Service Clearance

LOC	DIMENSION	CONDITION
A	48–in. (1219 mm)	Unit disconnect is mounted on panel
	18–in. (457 mm)	No disconnect, convenience outlet option
	18–in. (457 mm)	Recommended service clearance
	12–in. (305 mm)	Minimum clearance
B	42–in. (1067 mm)	Surface behind servicer is grounded (e.g., metal, masonry wall)
	36–in. (914 mm)	Surface behind servicer is electrically non–conductive (e.g., wood, fiberglass)
	Special	Check for sources of flue products within 10–ft of unit fresh air intake hood
C	36–in. (914 mm)	Side condensate drain is used
	18–in. (457 mm)	Minimum clearance
D	42–in. (1067 mm)	Surface behind servicer is grounded (e.g., metal, masonry wall, another unit)
	36–in. (914 mm)	Surface behind servicer is electrically non–conductive (e.g., wood, fiberglass)

WEIGHTS & DIMENSIONS (cont.)

ROOF CURB ACCESSORY #	A
CRRFCURB072A00	14" [356]
CRRFCURB073A00	24" [610]

NOTES:
1. ROOFCURB ACCESSORY IS SHIPPED DISASSEMBLED.
2. INSULATED PANELS: 1/2" THK, NEOPRENE FOAM, 1.0# DENSITY.
3. DIMENSIONS IN [ ] ARE IN MILLIMETERS.
4. ROOFCURB SIDEWALLS: 16 GAGE STEEL.
5. ATTACH DUCTWORK TO CURB. (FLANGES OF DUCT REST ON CURB).
6. SERVICE CLEARANCE 4 FT ON EACH SIDE.
7. ➡ DIRECTION OF AIR FLOW.
8. "L" & "S" DESIGNATIONS DENOTE LOCATION OF COMMON CROSS RAIL. (POSITION "S" FOR SMALL DUCT OPENING CURB).

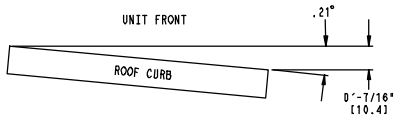

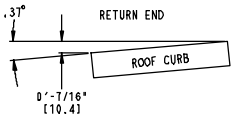

MAX CURB LEVELING TOLERANCES

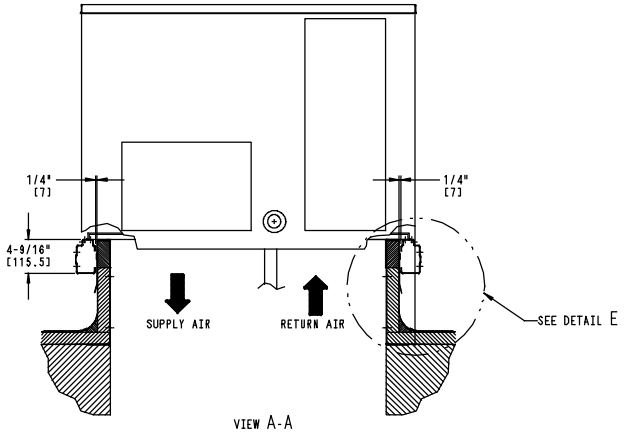

VIEW A-A

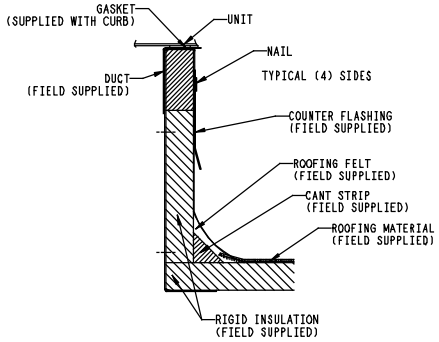

DETAIL E

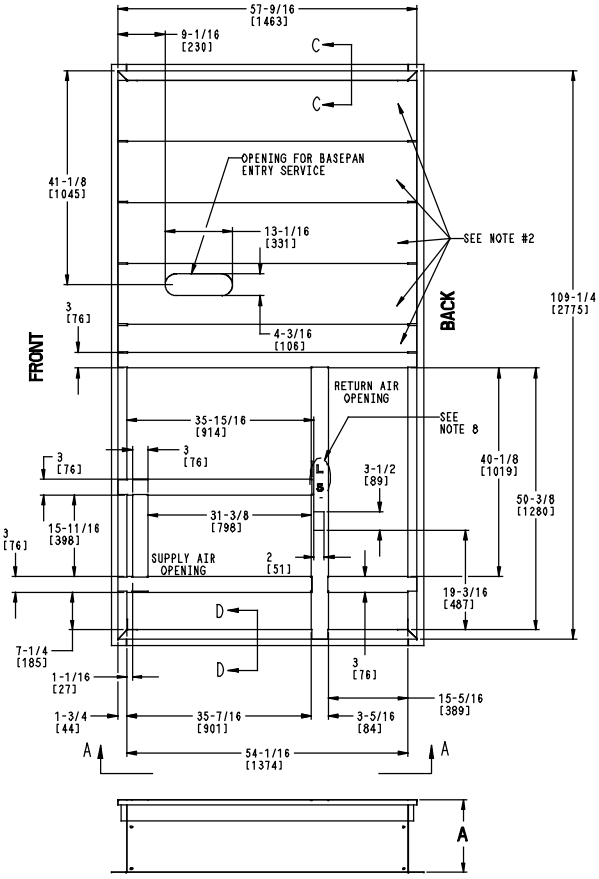

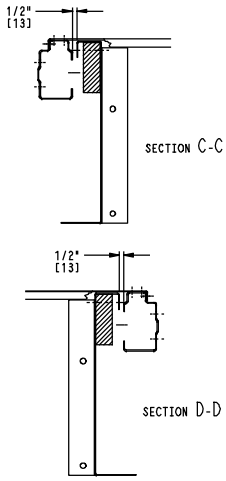

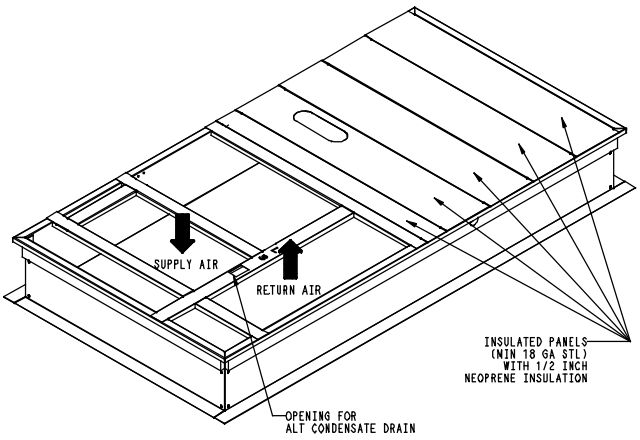

C10251

Fig. 19 - Curb Dimensions 50TCQ 14

OPTION / ACCESSORY WEIGHTS

OPTION / ACCESSORY	OPTION / ACCESSORY WEIGHTS															
	04		05		06		07		08		09		12		14	
	lb	kg	lb	kg	lb	kg	lb	kg	lb	kg	lb	kg	lb	kg	lb	kg
Power Exhaust – vertical	50	23	50	23	50	23	50	23	75	34	75	34	75	34	85	39
Power Exhaust – horizontal	30	14	30	14	30	14	30	14	30	14	30	14	30	14	75	34
EconoMi$er (IV or 2)	50	23	50	23	50	23	50	23	75	34	75	34	75	34	115	52
Two Position damper	39	18	39	18	39	18	39	18	58	26	58	26	58	26	65	29
Manual Dampers	12	5	12	5	12	5	12	5	18	8	18	8	18	8	25	11
Hail Guard (louvered)	16	7	16	7	16	7	16	7	34	15	34	15	34	15	45	20
Cu/Cu Condenser Coil	35	16	35	16	35	16	95	43	95	43	95	43	170	77	160	73
Cu/Cu Cond. & Evaporator Coils	60	27	60	27	90	41	165	75	140	64	195	88	270	122	280	127
Roof Curb (14–in. curb)	115	52	115	52	115	52	115	52	143	65	143	65	143	65	180	82
Roof Curb (24–in. curb)	197	89	197	89	197	89	197	89	245	111	245	111	245	111	235	107
CO_2 sensor	5	2	5	2	5	2	5	2	5	2	5	2	5	2	5	2
Electric Heater	30	14	30	14	30	14	30	14	45	20	45	20	45	20	25	11
Single Point Kit	10	5	10	5	10	5	10	5	12	5	12	5	12	5	25	11
Optional Indoor Motor / Drive	10	5	10	5	10	5	10	5	15	7	15	7	15	7	45	20
Motormaster Controller	35	16	35	16	35	16	35	16	35	16	35	16	35	16	25	11
Return Smoke Detector	5	2	5	2	5	2	5	2	5	2	5	2	5	2	5	2
Supply Smoke Detector	5	2	5	2	5	2	5	2	5	2	5	2	5	2	5	2
Non–Fused Disconnect	15	7	15	7	15	7	15	7	15	7	15	7	15	7	10	5
Powered Convenience outlet	35	16	35	16	35	16	35	16	35	16	35	16	35	16	32	15
Non–Powered Convenience outlet	5	2	5	2	5	2	5	2	5	2	5	2	5	2	4	2
Enthalpy Sensor	2	1	2	1	2	1	2	1	2	1	2	1	2	1	2	1
Differential Enthalpy Sensor	3	1	3	1	3	1	3	1	3	1	3	1	3	1	3	1

NOTE: Where multiple variations are available, the heaviest combination is listed.

Min operating ambient temp (cooling):

In mechanical cooling mode, your Carrier rooftop can safely operate down to an outdoor ambient temperature of 25°F (-4°C). It is possible to provide cooling at lower outdoor ambient temperatures by using less outside air, economizers, and/or accessory low ambient kits.

Max operating ambient temp (cooling):

The maximum operating ambient temperature for cooling mode is 115°F (46°C). While cooling operation above 115°F (46°C) may be possible, it could cause either a reduction in performance, reliability, or a protective action by the unit's internal safety devices.

Min and max airflow (cooling mode):

To maintain safe and reliable operation of your rooftop, operate within the cooling airflow limits. Operating above the max may cause blow-off, undesired airflow noise, or airflow related problems with the rooftop unit. Operating below the min may cause problems with coil freeze-up.

Airflow:

All units are draw-though in cooling mode.

Outdoor air application strategies:

Economizers reduce operating expenses and compressor run time by providing a free source of cooling and a means of ventilation to match application changing needs. In fact, they should be considered for most applications. Also, consider the various economizer control methods and their benefits, as well as sensors required to accomplish your application goals. Please contact your local Carrier representative for assistance.

Motor limits, Brake horsepower (BHP):

Due to Carrier's internal unit design, air path, and specially designed motors, the full horsepower (maximum continuous BHP) band, as listed in this manual, can be used with the utmost confidence. There is no need for extra safety factors, as Carrier's motors are designed and rigorously tested to use the entire, listed BHP range without either nuisance tripping or premature motor failure.

Sizing a rooftop

Bigger isn't necessarily better. While an air conditioner needs to have enough capacity to meet the load, it doesn't need excess capacity. In fact, having excess capacity typically results in very poor part load performance and humidity control.

Using higher design temperatures than ASHRAE recommends for your location, adding "safety factors" to the calculated load, and rounding up to the next largest unit, are all signs of oversizing air conditioners. Oversizing can cause short-cycling, and short cycling leads to poor humidity control, reduced efficiency, higher utility bills, drastic indoor temperature swings, excessive noise, and increased wear and tear on the air conditioner.

Rather than oversizing an air conditioner, wise contractors and engineers "right-size" or even slightly undersize air conditioners. Correctly sizing an air conditioner controls humidity better; promotes efficiency; reduces utility bills; extends equipment life, and maintains even, comfortable temperatures.

Low ambient applications

When equipped with a Carrier economizer, your rooftop unit can cool your space by bringing in fresh, cool outside air. In fact, when so equipped, accessory low ambient kit may not be necessary. In low ambient conditions, unless the outdoor air is excessively humid or contaminated, economizer-based "free cooling" is the preferred less costly and energy conscious method.

In low ambient applications where outside air might not be desired (such as contaminated or excessively humid outdoor environments), your Carrier rooftop can operate at ambient temperatures down to -20°F (-29°C) using the recommended accessory Motormaster low ambient controller.

SELECTION PROCEDURE (WITH 50TCQA07 EXAMPLE)

(Selection software by Carrier saves time by performing many of the steps below.)

I. Determine cooling and heating loads.

Given:

Mixed Air Drybulb	80°F (27°C)
Mixed Air Wetbulb	67°F (19°C)
Ambient Drybulb	95°F (35°C)
TC_{Load}	65.0 MBH
SHC_{Load}	46.0 MBH
HC_{Load}	45.0 MBH
Outdoor-Air Winter Design Temp	0°F (-18°C)
Indoor Air Winter Design Temp	70°F (21°C)
Vertical Supply Air	2100 CFM
External Static Pressure	0.66 in.wg
Electrical Characteristics	230-3-60

II. Make an initial guess at cooling tons.

Refrig. tons = TC_{Load} / 12 MBH per ton
Refrig. tons = 65.0 / 12 = 5.42 tons

In this case, start by looking at the 50TCQA07.

III. Look up the rooftop's TC and SHC.

Table 11 shows that, at the application's supply air CFM, mixed air and ambient temperatures, the 50TCQA07 supplies:
TC_{Load} = 69.0 MBH
SHC_{Load} = 50.7 MBH.

IV. Calculate the building Latent Heat Load.

$LC_{Load} = TC_{Load} - SHC_{Load}$
LC_{Load} = 65.0 MBH - 46.0 MBH = 19.0 MBH

V. Select electric heat.

Enter the Instantaneous and Integrated Heating Ratings, Table 18 at 2100 cfm. At 70°F (21°C) return indoor air and 0°F (-18°C) air entering outdoor coil, the integrated heating capacity after interpolation, is 24,300 Btuh. (Select integrated heating capacity value since deductions for outdoor-coil frost and defrosting have already been made. No correction is required.)

The required heating capacity is 45,000 Btuh. Therefore, 20,700 Btuh (45,000 – 24,300) additional electric heat is required.

Determine additional electric heat capacity in kW.

$$\frac{20{,}700 \text{ Btuh}}{3413 \text{ Btuh/kW}} = 6.1 \text{ kW of heat required.}$$

Enter the Electric Heating Capacities table for 50TCQA07 at 208/230, 3-phase. The 6.5-kW heater at 230V most closely satisfies the heating required.

6.5 kW x 3413 = 22,185 Btuh

Total unit heating capacity is 46,485 Btuh (22,185 + 24,300).

VI. Calculate RTU Latent Heat Capacity

LC = TC - SHC
LC = 69.0 MBH - 50.7 MBH = 18.3 MBH

VII. Compare RTU capacities to loads.

Compare the rooftop's SHC and LC to the building's Sensible and Latent Heat Loads.
See Notes 1 and 2.

VIII. Select factory options (FIOP)

Local code requires an economizer for any unit with TC larger than 65.0 MBH.

IX. Calculate the total static pressure.

External static pressure	0.66 in. wg
Sum of FIOP/Accessory static	+0.14 in. wg
Total Static Pressure	0.80 in. wg

X. Look up the Indoor Fan RPM & BHP.

Table 35 shows, at 2100 CFM & ESP= 0.8,
RPM = 1268 & BHP = 1.52

XI. Determine electrical requirements

Table 47 shows the MCA and MOCP of a 50TCQA07 (without convenience outlet) with 6.5 kW electric heater as:

MCA = 52.3 amps & MOCP = 60 amps
Min. Disconnect Size: FLA = 50 & LRA = 199.

Legend
BHP — Brake horsepower
FLA — Full load amps
HC — Heating Capacities
LC — Latent capacity
LRA — Lock rotor amp
MBH — (1,000) BTUH
MCA — Min. circuit ampacity
MOCP — Max. over–current protection
RPM — Revolutions per minute
RTU — Rooftop unit
SHC — Sensible heat capacity
THC — Total capacity

NOTES:
1. Selecting a unit with a SHC slightly lower than the SHC_{Load} is often better than oversizing. Slightly lower SHC's will help control indoor humidity, and prevent temperature swings.
2. If the rooftop's capacity meets the Sensible Heat Load, but not the Latent Heat Load.

Table 8 – COOLING CAPACITIES 1-STAGE COOLING 3 TONS

50TCQA04				AMBIENT TEMPERATURE											
				85			95			105			115		
				EAT (db)			EAT (db)			EAT (db)			EAT (db)		
				75	80	85	75	80	85	75	80	85	75	80	85
900 Cfm	EAT (wb)	58	THC	31.4	31.4	35.7	29.6	29.6	33.6	27.6	27.6	31.5	25.6	25.6	29.1
			SHC	27.1	31.4	35.7	25.5	29.6	33.6	23.8	27.6	31.5	22.0	25.6	29.1
		62	THC	33.5	33.5	34.4	30.9	30.9	33.2	28.3	28.3	31.9	25.7	25.7	30.4
			SHC	24.8	29.6	34.4	23.6	28.4	33.2	22.3	27.1	31.9	20.9	25.7	30.4
		67	THC	38.0	38.0	38.0	35.3	35.3	35.3	32.4	32.4	32.4	29.4	29.4	29.4
			SHC	21.0	25.8	30.7	19.8	24.6	29.5	18.6	23.4	28.2	17.3	22.2	27.0
		72	THC	42.1	42.1	42.1	39.7	39.7	39.7	37.1	37.1	37.1	34.0	34.0	34.0
			SHC	16.7	21.6	26.4	15.8	20.6	25.5	14.7	19.6	24.4	13.6	18.4	23.2
		76	THC	–	44.9	44.9	–	43.0	43.0	–	40.5	40.5	–	37.5	37.5
			SHC	–	17.8	22.7	–	17.1	22.0	–	16.2	21.1	–	15.2	20.1
1050 Cfm	EAT (wb)	58	THC	33.7	33.7	38.3	31.7	31.7	36.0	29.6	29.6	33.6	27.4	27.4	31.2
			SHC	29.1	33.7	38.3	27.3	31.7	36.0	25.5	29.6	33.6	23.6	27.4	31.2
		62	THC	35.0	35.0	38.1	32.3	32.3	36.7	29.7	29.7	35.1	27.4	27.4	32.5
			SHC	26.9	32.5	38.1	25.6	31.2	36.7	24.2	29.7	35.1	22.4	27.4	32.5
		67	THC	39.4	39.4	39.4	36.7	36.7	36.7	33.7	33.7	33.7	30.5	30.5	30.5
			SHC	22.4	28	33.6	21.2	26.8	32.4	20.0	25.6	31.2	18.7	24.3	29.9
		72	THC	43.3	43.3	43.3	41.0	41.0	41.0	38.3	38.3	38.3	35.2	35.2	35.2
			SHC	17.2	22.8	28.4	16.4	22.0	27.7	15.3	21.0	26.6	14.2	19.8	25.4
		76	THC	–	45.8	45.8	–	44.0	44.0	–	41.6	41.6	–	38.6	38.6
			SHC	–	18.4	24.2	–	17.8	23.5	–	16.9	22.7	–	15.9	21.6
1200 Cfm	EAT (wb)	58	THC	35.7	35.7	40.5	33.5	33.5	38.1	31.3	31.3	35.6	28.9	28.9	32.9
			SHC	30.8	35.7	40.5	28.9	33.5	38.1	27.0	31.3	35.6	24.9	28.9	32.9
		62	THC	36.3	36.3	41.5	33.6	33.6	39.7	31.3	31.3	37.1	29.0	29.0	34.3
			SHC	28.9	35.2	41.5	27.4	33.6	39.7	25.6	31.3	37.1	23.6	29.0	34.3
		67	THC	40.4	40.4	40.4	37.8	37.8	37.8	34.7	34.7	34.7	31.4	31.4	32.6
			SHC	23.6	30.0	36.4	22.5	28.9	35.3	21.3	27.6	34.0	19.9	26.3	32.6
		72	THC	44.1	44.1	44.1	42.0	42.0	42.0	39.2	39.2	39.2	36.0	36.0	36.0
			SHC	17.7	23.9	30.2	16.9	23.3	29.6	15.9	22.3	28.6	14.7	21.1	27.5
		76	THC	–	46.6	46.6	–	44.4	44.4	–	42.3	42.3	–	39.4	39.4
			SHC	–	19.0	25.5	–	18.3	24.7	–	17.6	24.0	–	16.6	23.1
1350 Cfm	EAT (wb)	58	THC	37.5	37.5	42.6	35.1	35.1	40.0	32.8	32.8	37.3	30.3	30.3	34.5
			SHC	32.4	37.5	42.6	30.3	35.1	40.0	28.3	32.8	37.3	26.1	30.3	34.5
		62	THC	37.6	37.6	44.4	35.2	35.2	41.6	32.8	32.8	38.8	30.3	30.3	35.9
			SHC	30.7	37.6	44.4	28.8	35.2	41.6	26.8	32.8	38.8	24.8	30.3	35.9
		67	THC	41.2	41.2	41.2	38.6	38.6	38.6	35.6	35.6	36.7	32.2	32.2	35.3
			SHC	24.8	31.9	39	23.7	30.8	38.0	22.5	29.6	36.7	21.1	28.2	35.3
		72	THC	44.7	44.7	44.7	42.7	42.7	42.7	39.9	39.9	39.9	36.7	36.7	36.7
			SHC	18.0	24.9	31.8	17.3	24.4	31.5	16.3	23.5	30.6	15.2	22.3	29.5
		76	THC	–	47.2	47.2	–	44.9	44.9	–	42.9	42.9	–	39.9	39.9
			SHC	–	19.5	26.6	–	18.7	25.7	–	18.1	25.2	–	17.2	24.4
1500 Cfm	EAT (wb)	58	THC	38.8	38.8	44.1	36.6	36.6	41.6	34.1	34.1	38.8	31.5	31.5	35.8
			SHC	33.5	38.8	44.1	31.6	36.6	41.6	29.4	34.1	38.8	27.2	31.5	35.8
		62	THC	38.8	38.8	45.9	36.6	36.6	43.3	34.1	34.1	40.4	31.6	31.6	37.3
			SHC	31.7	38.8	45.9	29.9	36.6	43.3	27.9	34.1	40.4	25.8	31.6	37.3
		67	THC	41.8	41.8	41.8	39.2	39.2	40.6	36.3	36.3	39.3	32.8	32.8	37.9
			SHC	25.8	33.6	41.4	24.9	32.7	40.6	23.7	31.5	39.3	22.3	30.1	37.9
		72	THC	45.2	45.2	45.2	43.2	43.2	43.2	40.5	40.5	40.5	37.2	37.2	37.2
			SHC	18.4	25.8	33.3	17.7	25.4	33.2	16.8	24.6	32.5	15.6	23.5	31.4
		76	THC	–	47.6	47.6	–	45.2	45.2	–	43.2	43.2	–	40.3	40.3
			SHC	–	19.9	27.5	–	19.1	26.7	–	18.6	26.3	–	17.7	25.6

LEGEND

– – Do not operate in this region (Points are outside SST and SDT permissible operating range)
Cfm – Cubic feet per minute (supply air)
EAT(db) – Entering air temperature (dry bulb)
EAT(wb) – Entering air temperature (wet bulb)
SHC – Sensible heat capacity
THC – Total capacity

Table 9 – COOLING CAPACITIES 1-STAGE COOLING 4 TONS

50TCQA05				AMBIENT TEMPERATURE											
				85			95			105			115		
				EAT (db)			EAT (db)			EAT (db)			EAT (db)		
				75	80	85	75	80	85	75	80	85	75	80	85
1200 Cfm	EAT (wb)	58	THC	41.7	41.7	46.9	39.9	39.9	45.1	37.8	37.8	43.1	35.6	35.6	41.0
			SHC	36.5	41.7	46.9	34.7	39.9	45.1	32.5	37.8	43.1	30.3	35.6	41.0
		62	THC	44.1	44.1	44.1	42.0	42.0	43.1	39.4	39.4	41.9	36.7	36.7	40.6
			SHC	33.7	38.9	44.1	32.6	37.8	43.1	31.3	36.6	41.9	29.8	35.2	40.6
		67	THC	48.8	48.8	48.8	46.4	46.4	46.4	43.7	43.7	43.7	40.9	40.9	40.9
			SHC	28.2	33.4	38.6	27.1	32.4	37.6	25.9	31.3	36.6	24.6	30.0	35.4
		72	THC	53.2	53.2	53.2	50.7	50.7	50.7	48.1	48.1	48.1	45.2	45.2	45.2
			SHC	22.3	27.5	32.7	21.3	26.5	31.8	20.2	25.5	30.8	18.9	24.4	29.8
		76	THC	–	56.2	56.2	–	53.8	53.8	–	51.1	51.1	–	48.0	48.0
			SHC	–	22.5	27.7	–	21.7	27.0	–	20.8	26.1	–	19.7	25.1
1400 Cfm	EAT (wb)	58	THC	44.1	44.1	50.2	42.2	42.2	48.3	40.2	40.2	46.4	38.0	38.0	44.3
			SHC	38.1	44.1	50.2	36.1	42.2	48.3	34.0	40.2	46.4	31.7	38.0	44.3
		62	THC	45.8	45.8	48.3	43.3	43.3	47.1	40.8	40.8	45.8	38.0	38.0	44.3
			SHC	36.2	42.3	48.3	34.9	41.0	47.1	33.4	39.6	45.8	31.7	38.0	44.3
		67	THC	50.2	50.2	50.2	47.7	47.7	47.7	44.9	44.9	44.9	42.0	42.0	42.0
			SHC	29.7	35.8	41.9	28.7	34.8	40.9	27.5	33.7	39.9	26.2	32.5	38.8
		72	THC	54.4	54.4	54.4	52.0	52.0	52.0	49.2	49.2	49.2	46.2	46.2	46.2
			SHC	22.9	28.9	35.0	21.9	28.0	34.1	20.8	27.0	33.2	19.5	25.8	32.2
		76	THC	–	57.1	57.1	–	54.8	54.8	–	52.0	52.0	–	48.7	48.7
			SHC	–	23.3	29.4	–	22.5	28.6	–	21.5	27.7	–	20.3	26.7
1600 Cfm	EAT (wb)	58	THC	46.1	46.1	53.1	44.0	44.0	51.0	41.9	41.9	48.9	39.6	39.6	46.8
			SHC	39.2	46.1	53.1	37.1	44.0	51.0	34.8	41.9	48.9	32.4	39.6	46.8
		62	THC	46.9	46.9	52.1	44.6	44.6	50.5	42.0	42.0	49.0	39.6	39.6	46.8
			SHC	38.2	45.2	52.1	36.5	43.5	50.5	34.9	42.0	49.0	32.4	39.6	46.8
		67	THC	51.2	51.2	51.2	48.7	48.7	48.7	45.9	45.9	45.9	42.8	42.8	42.8
			SHC	31.1	38.0	45.0	30.1	37.1	44.0	28.9	35.9	43.0	27.5	34.7	42.0
		72	THC	55.3	55.3	55.3	52.9	52.9	52.9	50.0	50.0	50.0	46.9	46.9	46.9
			SHC	23.2	30.1	37.1	22.3	29.3	36.3	21.2	28.3	35.4	19.9	27.1	34.4
		76	THC	–	57.8	57.8	–	55.4	55.4	–	52.6	52.6	–	49.3	49.3
			SHC	–	23.9	30.8	–	23.1	30.1	–	22.1	29.2	–	20.9	28.2
1800 Cfm	EAT (wb)	58	THC	47.7	47.7	55.5	45.6	45.6	53.5	43.4	43.4	51.3	41.0	41.0	49.1
			SHC	39.9	47.7	55.5	37.8	45.6	53.5	35.4	43.4	51.3	32.8	41.0	49.1
		62	THC	47.9	47.9	55.7	45.7	45.7	53.5	43.4	43.4	51.4	41.0	41.0	49.1
			SHC	40.1	47.9	55.7	37.8	45.7	53.5	35.5	43.4	51.4	32.9	41.0	49.1
		67	THC	52.0	52.0	52.0	49.4	49.4	49.4	46.6	46.6	46.6	43.5	43.5	45.0
			SHC	32.3	40.1	47.9	31.3	39.2	47.1	30.1	38.1	46.0	28.7	36.9	45.0
		72	THC	55.9	55.9	55.9	53.5	53.5	53.5	50.6	50.6	50.6	47.4	47.4	47.4
			SHC	23.4	31.3	39.1	22.6	30.5	38.3	21.5	29.5	37.4	20.1	28.3	36.4
		76	THC	–	58.3	58.3	–	55.9	55.9	–	53.1	53.1	–	49.6	49.6
			SHC	–	24.4	32.2	–	23.6	31.5	–	22.6	30.6	–	21.4	29.6
2000 Cfm	EAT (wb)	58	THC	49.1	49.1	57.7	46.9	46.9	55.7	44.6	44.6	53.5	42.1	42.1	51.1
			SHC	40.4	49.1	57.7	38.2	46.9	55.7	35.8	44.6	53.5	33.1	42.1	51.1
		62	THC	49.1	49.1	57.7	47.0	47.0	55.7	44.7	44.7	53.5	42.2	42.2	51.2
			SHC	40.4	49.1	57.7	38.2	47.0	55.7	35.8	44.7	53.5	33.1	42.2	51.2
		67	THC	52.6	52.6	52.6	50.0	50.0	50.0	47.1	47.1	49.0	44.0	44.0	47.9
			SHC	33.4	42.0	50.7	32.5	41.2	49.9	31.2	40.1	49.0	29.8	38.8	47.9
		72	THC	56.4	56.4	56.4	53.9	53.9	53.9	51.1	51.1	51.1	47.8	47.8	47.8
			SHC	23.6	32.2	40.9	22.8	31.5	40.3	21.7	30.6	39.4	20.3	29.3	38.4
		76	THC	–	58.6	58.6	–	56.3	56.3	–	53.4	53.4	–	49.9	49.9
			SHC	–	24.8	33.5	–	24.0	32.8	–	23.1	32.0	–	21.8	30.9

LEGEND

– – Do not operate in this region (Points are outside SST and SDT permissible operating range)
Cfm – Cubic feet per minute (supply air)
EAT(db) – Entering air temperature (dry bulb)
EAT(wb) – Entering air temperature (wet bulb)
SHC – Sensible heat capacity
THC – Total capacity

Table 10 – COOLING CAPACITIES 1-STAGE COOLING 5 TONS

50TCQA06				AMBIENT TEMPERATURE											
				85			95			105			115		
				EAT (db)			EAT (db)			EAT (db)			EAT (db)		
				75	80	85	75	80	85	75	80	85	75	80	85
1500 Cfm	EAT (wb)	58	THC	52.7	52.7	59.2	49.9	49.9	56.5	46.9	46.9	53.6	43.6	43.6	50.4
			SHC	46.2	52.7	59.2	43.4	49.9	56.5	40.3	46.9	53.6	36.8	43.6	50.4
		62	THC	55.5	55.5	55.8	52.1	52.1	54.3	48.1	48.1	52.4	43.7	43.7	50.3
			SHC	42.8	49.3	55.8	41.1	47.7	54.3	39.2	45.8	52.4	36.7	43.5	50.3
		67	THC	61.7	61.7	61.7	58.1	58.1	58.1	54.1	54.1	54.1	49.6	49.6	49.6
			SHC	35.6	42.1	48.6	34.0	40.5	47.1	32.2	38.8	45.5	30.2	37.0	43.8
		72	THC	68.0	68.0	68.0	64.3	64.3	64.3	60.1	60.1	60.1	55.5	55.5	55.5
			SHC	27.9	34.4	40.9	26.4	33.0	39.6	24.7	31.4	38.1	22.8	29.7	36.5
		76	THC	–	72.9	72.9	–	69.0	69.0	–	64.5	64.5	–	59.5	59.5
			SHC	–	28.0	34.5	–	26.6	33.2	–	25.1	31.8	–	23.4	30.2
1750 Cfm	EAT (wb)	58	THC	56.0	56.0	63.6	53.0	53.0	60.7	49.9	49.9	57.7	46.5	46.5	54.5
			SHC	48.4	56.0	63.6	45.4	53.0	60.7	42.2	49.9	57.7	38.6	46.5	54.5
		62	THC	57.6	57.6	61.6	54.1	54.1	59.9	50.1	50.1	57.6	46.6	46.6	54.5
			SHC	46.4	54.0	61.6	44.6	52.2	59.9	42.1	49.8	57.6	38.7	46.6	54.5
		67	THC	63.6	63.6	63.6	59.9	59.9	59.9	55.7	55.7	55.7	51.1	51.1	51.1
			SHC	38.0	45.6	53.2	36.4	44.0	51.7	34.5	42.3	50.1	32.5	40.5	48.4
		72	THC	69.9	69.9	69.9	66.0	66.0	66.0	61.7	61.7	61.7	56.9	56.9	56.9
			SHC	29.0	36.6	44.2	27.5	35.2	42.8	25.7	33.5	41.3	23.7	31.7	39.7
		76	THC	–	74.6	74.6	–	70.6	70.6	–	65.8	65.8	–	60.5	60.5
			SHC	–	29.2	36.8	–	27.8	35.5	–	26.1	34.0	–	24.3	32.3
2000 Cfm	EAT (wb)	58	THC	58.8	58.8	67.4	55.8	55.8	64.5	52.5	52.5	61.4	48.8	48.8	57.9
			SHC	50.1	58.8	67.4	47.0	55.8	64.5	43.6	52.5	61.4	39.7	48.8	57.9
		62	THC	59.3	59.3	66.9	55.9	55.9	64.6	52.5	52.5	61.4	48.8	48.8	57.9
			SHC	49.5	58.2	66.9	47.1	55.9	64.6	43.6	52.5	61.4	39.8	48.8	57.9
		67	THC	65.1	65.1	65.1	61.3	61.3	61.3	56.9	56.9	56.9	52.2	52.2	52.8
			SHC	40.2	48.9	57.6	38.6	47.3	56.1	36.7	45.6	54.5	34.6	43.7	52.8
		72	THC	71.3	71.3	71.3	67.3	67.3	67.3	62.8	62.8	62.8	57.8	57.8	57.8
			SHC	29.9	38.6	47.3	28.3	37.1	45.9	26.5	35.5	44.4	24.5	33.6	42.7
		76	THC	–	75.9	75.9	–	71.7	71.7	–	66.6	66.6	–	61.2	61.2
			SHC	–	30.2	38.9	–	28.7	37.6	–	27.0	36.0	–	25.1	34.3
2250 Cfm	EAT (wb)	58	THC	61.0	61.0	70.8	57.9	57.9	67.8	54.5	54.5	64.5	50.7	50.7	60.9
			SHC	51.3	61.0	70.8	48.1	57.9	67.8	44.5	54.5	64.5	40.5	50.7	60.9
		62	THC	61.1	61.1	70.8	58.0	58.0	67.8	54.6	54.6	64.6	50.7	50.7	61.0
			SHC	51.3	61.1	70.8	48.1	58.0	67.8	44.6	54.6	64.6	40.5	50.7	61.0
		67	THC	66.2	66.2	66.2	62.3	62.3	62.3	57.9	57.9	58.8	53.1	53.1	57.0
			SHC	42.3	52.0	61.8	40.6	50.5	60.4	38.7	48.7	58.8	36.6	46.8	57.0
		72	THC	72.3	72.3	72.3	68.3	68.3	68.3	63.7	63.7	63.7	58.5	58.5	58.5
			SHC	30.6	40.4	50.2	29.1	39.0	48.9	27.2	37.3	47.3	25.0	35.3	45.5
		76	THC	–	76.9	76.9	–	72.5	72.5	–	67.4	67.4	–	61.8	61.8
			SHC	–	31.1	40.9	–	29.6	39.5	–	27.9	37.9	–	25.9	36.2
2500 Cfm	EAT (wb)	58	THC	63.0	63.0	73.8	59.8	59.8	70.7	56.2	56.2	67.3	52.3	52.3	63.7
			SHC	52.1	63.0	73.8	48.8	59.8	70.7	45.1	56.2	67.3	41.0	52.3	63.7
		62	THC	63.0	63.0	73.9	59.8	59.8	70.8	56.3	56.3	67.4	52.4	52.4	63.7
			SHC	52.2	63.0	73.9	48.9	59.8	70.8	45.2	56.3	67.4	41.0	52.4	63.7
		67	THC	67.2	67.2	67.2	63.1	63.1	64.5	58.7	58.7	62.8	53.8	53.8	61.0
			SHC	44.2	55.0	65.9	42.5	53.5	64.5	40.6	51.7	62.8	38.3	49.6	61.0
		72	THC	73.2	73.2	73.2	69.0	69.0	69.0	64.3	64.3	64.3	59.0	59.0	59.0
			SHC	31.3	42.2	53.1	29.7	40.7	51.7	27.8	38.9	50.1	25.5	36.9	48.3
		76	THC	–	77.7	77.7	–	73.1	73.1	–	67.9	67.9	–	62.2	62.2
			SHC	–	32.0	42.9	–	30.5	41.5	–	28.6	39.8	–	26.6	38.0

LEGEND

– – Do not operate in this region (Points are outside SST and SDT permissible operating range)
Cfm – Cubic feet per minute (supply air)
EAT(db) – Entering air temperature (dry bulb)
EAT(wb) – Entering air temperature (wet bulb)
SHC – Sensible heat capacity
THC – Total capacity

Table 11 – COOLING CAPACITIES 1-STAGE COOLING 6 TONS

50TCQA07				AMBIENT TEMPERATURE											
				85			95			105			115		
				EAT (db)			EAT (db)			EAT (db)			EAT (db)		
				75	80	85	75	80	85	75	80	85	75	80	85
1800 Cfm	EAT (wb)	58	THC	61.1	61.1	68.9	58.3	58.3	66.1	55.2	55.2	63.2	51.8	51.8	59.9
			SHC	53.3	61.1	68.9	50.4	58.3	66.1	47.2	55.2	63.2	43.7	51.8	59.9
		62	THC	64.1	64.1	65.2	60.5	60.5	63.6	56.5	56.5	61.8	52.1	52.1	59.7
			SHC	49.6	57.4	65.2	47.8	55.7	63.6	45.8	53.8	61.8	43.4	51.6	59.7
		67	THC	70.8	70.8	70.8	67.2	67.2	67.2	63.1	63.1	63.1	58.6	58.6	58.6
			SHC	40.7	48.5	56.3	39.1	47.0	54.9	37.3	45.3	53.3	35.3	43.5	51.7
		72	THC	77.4	77.4	77.4	73.7	73.7	73.7	69.5	69.5	69.5	64.9	64.9	64.9
			SHC	31.1	38.9	46.7	29.6	37.5	45.5	27.9	36.0	44.0	26.0	34.2	42.5
		76	THC	–	82.0	82.0	–	78.4	78.4	–	73.9	73.9	–	68.8	68.8
			SHC	–	30.9	38.8	–	29.7	37.6	–	28.1	36.2	–	26.4	34.6
2100 Cfm	EAT (wb)	58	THC	64.6	64.6	73.7	61.6	61.6	70.8	58.4	58.4	67.7	54.8	54.8	64.3
			SHC	55.5	64.6	73.7	52.5	61.6	70.8	49.1	58.4	67.7	45.3	54.8	64.3
		62	THC	66.1	66.1	71.7	62.5	62.5	69.9	58.5	58.5	67.8	54.9	54.9	64.4
			SHC	53.4	62.5	71.7	51.5	60.7	69.9	49.2	58.5	67.8	45.3	54.9	64.4
		67	THC	72.8	72.8	72.8	69.0	69.0	69.0	64.8	64.8	64.8	60.2	60.2	60.2
			SHC	43.1	52.2	61.3	41.5	50.7	59.9	39.7	49.1	58.4	37.7	47.3	56.8
		72	THC	79.2	79.2	79.2	75.4	75.4	75.4	71.0	71.0	71.0	66.2	66.2	66.2
			SHC	31.9	41.1	50.2	30.5	39.7	49.0	28.7	38.1	47.5	26.7	36.3	45.9
		76	THC	–	83.1	83.1	–	79.8	79.8	–	75.1	75.1	–	69.7	69.7
			SHC	–	32.0	41.2	–	30.7	39.9	–	29.1	38.5	–	27.3	36.9
2400 Cfm	EAT (wb)	58	THC	67.4	67.4	77.8	64.4	64.4	74.9	61.0	61.0	71.7	57.3	57.3	68.2
			SHC	57.0	67.4	77.8	53.9	64.4	74.9	50.3	61.0	71.7	46.4	57.3	68.2
		62	THC	67.8	67.8	77.4	64.4	64.4	74.9	61.0	61.0	71.7	57.3	57.3	68.3
			SHC	56.5	66.9	77.4	53.9	64.4	74.9	50.3	61.0	71.7	46.4	57.3	68.3
		67	THC	74.3	74.3	74.3	70.4	70.4	70.4	66.1	66.1	66.1	61.4	61.4	61.7
			SHC	45.3	55.7	66.1	43.7	54.2	64.7	41.9	52.6	63.3	39.9	50.8	61.7
		72	THC	80.4	80.4	80.4	76.6	76.6	76.6	72.1	72.1	72.1	67.1	67.1	67.1
			SHC	32.6	43.0	53.4	31.2	41.7	52.3	29.3	40.1	50.8	27.2	38.2	49.2
		76	THC	–	84.0	84.0	–	80.7	80.7	–	76.0	76.0	–	70.4	70.4
			SHC	–	32.6	43.1	–	31.6	42.2	–	30.0	40.8	–	28.1	39.1
2700 Cfm	EAT (wb)	58	THC	69.7	69.7	81.5	66.6	66.6	78.5	63.1	63.1	75.2	59.3	59.3	71.6
			SHC	58.0	69.7	81.5	54.8	66.6	78.5	51.1	63.1	75.2	47.0	59.3	71.6
		62	THC	69.8	69.8	81.5	66.6	66.6	78.4	63.2	63.2	75.2	59.4	59.4	71.7
			SHC	58.0	69.8	81.5	54.8	66.6	78.4	51.2	63.2	75.2	47.1	59.4	71.7
		67	THC	75.4	75.4	75.4	71.4	71.4	71.4	67.1	67.1	67.9	62.3	62.3	66.4
			SHC	47.2	59.0	70.7	45.7	57.6	69.4	43.9	55.9	67.9	41.8	54.1	66.4
		72	THC	81.3	81.3	81.3	77.5	77.5	77.5	72.9	72.9	72.9	67.8	67.8	67.8
			SHC	33.0	44.8	56.5	31.7	43.6	55.5	29.8	41.9	54.0	27.7	40.0	52.4
		76	THC	–	84.9	84.9	–	81.3	81.3	–	76.6	76.6	–	70.8	70.8
			SHC	–	33.4	45.2	–	33.0	44.9	–	30.8	43.0	–	28.8	41.3
3000 Cfm	EAT (wb)	58	THC	71.7	71.7	84.7	68.5	68.5	81.7	64.9	64.9	78.3	61.0	61.0	74.7
			SHC	58.7	71.7	84.7	55.4	68.5	81.7	51.6	64.9	78.3	47.3	61.0	74.7
		62	THC	71.7	71.7	84.8	68.6	68.6	81.7	65.0	65.0	78.3	61.0	61.0	74.7
			SHC	58.7	71.7	84.8	55.4	68.6	81.7	51.6	65.0	78.3	47.4	61.0	74.7
		67	THC	76.4	76.4	76.4	72.3	72.3	73.8	67.9	67.9	72.4	63.0	63.0	70.8
			SHC	49.0	62.1	75.1	47.5	60.7	73.8	45.7	59	72.4	43.4	57.1	70.8
		72	THC	82.0	82.0	82.0	78.2	78.2	78.2	73.5	73.5	73.5	68.2	68.2	68.2
			SHC	33.4	46.5	59.5	32.1	45.3	58.5	30.2	43.6	57.1	28.0	41.7	55.5
		76	THC	–	85.5	85.5	–	81.8	81.8	–	77.1	77.1	–	71.3	71.3
			SHC	–	34.2	47.2	–	33.0	46.3	–	31.6	45.1	–	29.5	43.3

LEGEND

– – Do not operate in this region (Points are outside SST and SDT permissible operating range)
Cfm – Cubic feet per minute (supply air)
EAT(db) – Entering air temperature (dry bulb)
EAT(wb) – Entering air temperature (wet bulb)
SHC – Sensible heat capacity
THC – Total capacity

Table 12 – COOLING CAPACITIES 2-STAGE COOLING 7.5 TONS

50TCQD08				AMBIENT TEMPERATURE											
				85			95			105			115		
				EAT (db)			EAT (db)			EAT (db)			EAT (db)		
				75	80	85	75	80	85	75	80	85	75	80	85
2250Cfm	EAT (wb)	58	THC	77.4	77.4	87.8	74.1	74.1	84.1	69.8	69.8	79.2	65.2	65.2	74.1
			SHC	66.9	77.4	87.8	64.0	74.1	84.1	60.3	69.8	79.2	56.4	65.2	74.1
		62	THC	81.8	81.8	83.7	77.2	77.2	81.4	71.9	71.9	78.9	66.6	66.6	75.9
			SHC	60.6	72.1	83.7	58.4	69.9	81.4	55.9	67.4	78.9	53.2	64.5	75.9
		67	THC	90.6	90.6	90.6	86.0	86.0	86.0	80.8	80.8	80.8	75.1	75.1	75.1
			SHC	50.4	62.0	73.5	48.4	60.0	71.6	46.2	57.8	69.3	43.9	55.4	67.0
		72	THC	99.4	99.4	99.4	94.7	94.7	94.7	89.5	89.5	89.5	83.8	83.8	83.8
			SHC	39.6	51.3	62.9	37.7	49.4	61.0	35.8	47.4	59.0	33.6	45.2	56.8
		76	THC	–	105.7	105.7	–	100.8	100.8	–	95.5	95.5	–	89.7	89.7
			SHC	–	42.1	54.5	–	40.4	52.8	–	38.6	50.9	–	36.5	48.8
2625 Cfm	EAT (wb)	58	THC	81.8	81.8	92.8	78.0	78.0	88.6	74.1	74.1	84.2	69.5	69.5	78.9
			SHC	70.7	81.8	92.8	67.5	78.0	88.6	64.1	74.1	84.2	60.1	69.5	78.9
		62	THC	84.7	84.7	91.7	79.9	79.9	89.2	75.2	75.2	86.2	69.8	69.8	81.6
			SHC	65.2	78.5	91.7	62.9	76.1	89.2	60.3	73.3	86.2	56.8	69.2	81.6
		67	THC	93.4	93.4	93.4	88.6	88.6	88.6	83.2	83.2	83.2	77.4	77.4	77.4
			SHC	53.4	66.7	80.1	51.4	64.7	78.1	49.2	62.5	75.9	46.8	60.2	73.5
		72	THC	101.9	101.9	101.9	97.1	97.1	97.1	91.8	91.8	91.8	86.0	86.0	86.0
			SHC	40.8	54.1	67.5	38.9	52.3	65.6	36.9	50.3	63.6	34.8	48.1	61.5
		76	THC	–	107.7	107.7	–	102.6	102.6	–	97.2	97.2	–	91.2	91.2
			SHC	–	43.7	58.1	–	41.9	56.0	–	39.9	53.9	–	37.9	51.6
3000 Cfm	EAT (wb)	58	THC	85.6	85.6	97.2	81.8	81.8	92.9	77.6	77.6	88.0	72.9	72.9	82.8
			SHC	74.1	85.6	97.2	70.7	81.8	92.9	67.1	77.6	88.0	63.0	72.9	82.8
		62	THC	87.0	87.0	98.9	82.5	82.5	95.4	78.0	78.0	90.5	73.3	73.3	85.6
			SHC	69.4	84.1	98.9	66.6	81.0	95.4	63.1	76.8	90.5	59.6	72.6	85.6
		67	THC	95.5	95.5	95.5	90.5	90.5	90.5	85.1	85.1	85.1	79.0	79.0	79.6
			SHC	56.1	71.2	86.2	54.1	69.2	84.2	51.9	67.0	82.1	49.5	64.6	79.6
		72	THC	103.8	103.8	103.8	98.8	98.8	98.8	93.4	93.4	93.4	87.5	87.5	87.5
			SHC	41.8	56.7	71.6	39.9	54.8	69.8	37.9	52.9	67.8	35.8	50.7	65.7
		76	THC	–	109.1	109.1	–	104.0	104.0	–	98.3	98.3	–	92.2	92.2
			SHC	–	44.9	60.6	–	43.1	58.6	–	41.1	56.4	–	39.0	54.2
3375 Cfm	EAT (wb)	58	THC	88.9	88.9	100.9	84.9	84.9	96.4	80.5	80.5	91.4	75.7	75.7	86.0
			SHC	76.9	88.9	100.9	73.4	84.9	96.4	69.6	80.5	91.4	65.5	75.7	86.0
		62	THC	89.6	89.6	103.8	85.1	85.1	100.4	81.0	81.0	94.1	75.8	75.8	89.5
			SHC	72.4	88.1	103.8	69.7	85.0	100.4	65.6	79.8	94.1	62.1	75.8	89.5
		67	THC	97.1	97.1	97.1	92.1	92.1	92.1	86.5	86.5	87.9	80.3	80.3	85.4
			SHC	58.7	75.3	92.0	56.7	73.4	90.1	54.5	71.2	87.9	52.0	68.7	85.4
		72	THC	105.2	105.2	105.2	100.0	100.0	100.0	94.5	94.5	94.5	88.5	88.5	88.5
			SHC	42.6	59.0	75.3	40.7	57.1	73.5	38.8	55.2	71.6	36.6	53.1	69.5
		76	THC	–	110.1	110.1	–	105.0	105.0	–	99.2	99.2	–	92.9	92.9
			SHC	–	45.9	62.8	–	44.1	60.9	–	42.1	58.7	–	40.0	56.4
3750 Cfm	EAT (wb)	58	THC	91.6	91.6	104.0	87.5	87.5	99.4	83.0	83.0	94.3	78.1	78.1	88.7
			SHC	79.2	91.6	104.0	75.7	87.5	99.4	71.8	83.0	94.3	67.6	78.1	88.7
		62	THC	91.7	91.7	108.3	87.7	87.7	103.5	83.1	83.1	98.1	78.2	78.2	92.3
			SHC	75.2	91.7	108.3	71.8	87.7	103.5	68.1	83.1	98.1	64.1	78.2	92.3
		67	THC	98.4	98.4	98.4	93.3	93.3	95.6	87.7	87.7	93.4	81.5	81.5	90.9
			SHC	61.1	79.3	97.5	59.1	77.3	95.6	56.9	75.2	93.4	54.5	72.7	90.9
		72	THC	106.2	106.2	106.2	101.0	101.0	101.0	95.4	95.4	95.4	89.3	89.3	89.3
			SHC	43.4	61.1	78.8	41.5	59.2	76.9	39.5	57.3	75.0	37.4	55.2	73.0
		76	THC	–	111.0	111.0	–	105.8	105.8	–	99.8	99.8	–	93.5	93.5
			SHC	–	46.8	64.9	–	45.1	63.1	–	43.0	60.8	–	40.9	58.4

LEGEND

– – Do not operate in this region (Points are outside SST and SDT permissible operating range)
Cfm – Cubic feet per minute (supply air)
EAT(db) – Entering air temperature (dry bulb)
EAT(wb) – Entering air temperature (wet bulb)
SHC – Sensible heat capacity
THC – Total capacity

Table 13 – COOLING CAPACITIES 2-STAGE COOLING 8.5 TONS

50TCQD09				AMBIENT TEMPERATURE											
				85			95			105			115		
				EAT (db)			EAT (db)			EAT (db)			EAT (db)		
				75	80	85	75	80	85	75	80	85	75	80	85
2550 Cfm	EAT (wb)	58	THC	91.1	91.1	102.9	86.4	86.4	97.5	81.2	81.2	91.7	75.7	75.7	85.5
			SHC	79.4	91.1	102.9	75.2	86.4	97.5	70.8	81.2	91.7	66.0	75.7	85.5
		62	THC	96.0	96.0	99.4	89.2	89.2	96.4	83.0	83.0	93.4	76.5	76.5	88.0
			SHC	72.7	86.0	99.4	69.6	83.0	96.4	66.7	80.0	93.4	62.4	75.2	88.0
		67	THC	106.4	106.4	106.4	100.4	100.4	100.4	92.9	92.9	92.9	86.0	86.0	86.0
			SHC	60.4	73.8	87.2	57.7	71.1	84.5	54.7	68.1	81.6	51.8	65.2	78.6
		72	THC	117.3	117.3	117.3	111.2	111.2	111.2	104.3	104.3	104.3	97.0	97.0	97.0
			SHC	47.4	60.9	74.4	45.1	58.5	72.0	42.4	55.9	69.4	39.7	53.1	66.6
		76	THC	–	126.1	126.1	–	119.9	119.9	–	113.0	113.0	–	105.6	105.6
			SHC	–	50.3	64.3	–	48.0	61.8	–	45.6	59.4	–	43.0	56.7
2975 Cfm	EAT (wb)	58	THC	96.5	96.5	109.0	91.7	91.7	103.5	86.7	86.7	97.9	80.5	80.5	90.9
			SHC	84.1	96.5	109.0	79.9	91.7	103.5	75.5	86.7	97.9	70.1	80.5	90.9
		62	THC	98.2	98.2	109.0	92.9	92.9	105.4	87.0	87.0	100.5	80.6	80.6	94.5
			SHC	78.1	93.6	109.0	75.1	90.2	105.4	71.3	85.9	100.5	66.7	80.6	94.5
		67	THC	109.5	109.5	109.5	103.0	103.0	103.0	96.3	96.3	96.3	87.6	87.6	87.6
			SHC	64.1	79.6	95.2	61.4	76.9	92.5	58.7	74.3	89.8	55.3	70.9	86.5
		72	THC	120.6	120.6	120.6	114.2	114.2	114.2	107.3	107.3	107.3	99.5	99.5	99.5
			SHC	49.1	64.7	80.3	46.7	62.3	77.9	44.1	59.7	75.3	41.3	56.9	72.5
		76	THC	–	129.2	129.2	–	122.9	122.9	–	115.7	115.7	–	108.1	108.1
			SHC	–	52.3	68.4	–	50.0	65.8	–	47.6	63.5	–	45.0	60.8
3400 Cfm	EAT (wb)	58	THC	101.0	101.0	114.0	96.7	96.7	109.1	90.9	90.9	102.6	84.9	84.9	95.8
			SHC	88.0	101.0	114.0	84.2	96.7	109.1	79.2	90.9	102.6	74.0	84.9	95.8
		62	THC	102.3	102.3	116.5	96.9	96.9	112.5	90.7	90.7	106.3	84.6	84.6	99.1
			SHC	82.9	99.7	116.5	79.7	96.1	112.5	75.1	90.7	106.3	70.0	84.6	99.1
		67	THC	112.1	112.1	112.1	105.5	105.5	105.5	98.4	98.4	98.4	90.8	90.8	94.2
			SHC	67.7	85.3	102.9	65.1	82.7	100.2	62.2	79.8	97.3	59.2	76.7	94.2
		72	THC	123.0	123.0	123.0	116.5	116.5	116.5	109.4	109.4	109.4	101.6	101.6	101.6
			SHC	50.5	68.2	85.9	48.2	65.8	83.5	45.6	63.2	80.8	42.8	60.4	78.1
		76	THC	–	131.5	131.5	–	124.9	124.9	–	117.7	117.7	–	109.9	109.9
			SHC	–	54.1	72.1	–	51.8	69.7	–	49.4	67.2	–	46.8	64.6
3825 Cfm	EAT (wb)	58	THC	104.5	104.5	118.0	99.8	99.8	112.6	94.4	94.4	106.6	87.9	87.9	99.2
			SHC	91.1	104.5	118.0	86.9	99.8	112.6	82.3	94.4	106.6	76.6	87.9	99.2
		62	THC	105.0	105.0	123.0	100.3	100.3	117.5	93.4	93.4	109.5	87.3	87.3	102.3
			SHC	86.9	105.0	123.0	83.0	100.3	117.5	77.4	93.4	109.5	72.3	87.3	102.3
		67	THC	114.1	114.1	114.1	107.4	107.4	107.6	99.4	99.4	104.6	92.0	92.0	101.3
			SHC	71.2	90.8	110.4	68.5	88.1	107.6	65.4	85.0	104.6	62.4	81.9	101.3
		72	THC	124.9	124.9	124.9	118.2	118.2	118.2	111.0	111.0	111.0	103.1	103.1	103.1
			SHC	51.9	71.5	91.1	49.5	69.1	88.7	47.0	66.6	86.2	44.2	63.8	83.4
		76	THC	–	133.3	133.3	–	126.5	126.5	–	119.2	119.2	–	111.2	111.2
			SHC	–	55.7	75.6	–	53.5	73.3	–	51.1	70.8	–	48.5	68.1
4250 Cfm	EAT (wb)	58	THC	108.6	108.6	122.6	102.7	102.7	115.9	97.4	97.4	110.0	90.8	90.8	102.5
			SHC	94.6	108.6	122.6	89.5	102.7	115.9	84.9	97.4	110.0	79.1	90.8	102.5
		62	THC	109.0	109.0	126.4	103.4	103.4	121.2	97.5	97.5	114.2	91.3	91.3	106.9
			SHC	89.5	107.9	126.4	85.6	103.4	121.2	80.7	97.5	114.2	75.6	91.3	106.9
		67	THC	115.6	115.6	117.4	108.9	108.9	114.7	101.6	101.6	111.4	93.6	93.6	108.1
			SHC	74.3	95.9	117.4	71.7	93.2	114.7	68.7	90.1	111.4	65.6	86.8	108.1
		72	THC	126.4	126.4	126.4	119.7	119.7	119.7	112.3	112.3	112.3	104.2	104.2	104.2
			SHC	53.1	74.6	96.1	50.8	72.3	93.8	48.2	69.8	91.4	45.4	67.0	88.5
		76	THC	–	134.6	134.6	–	127.8	127.8	–	120.3	120.3	–	112.3	112.3
			SHC	–	57.2	78.8	–	55.0	76.6	–	52.6	74.1	–	50.0	71.5

LEGEND

– – Do not operate in this region (Points are outside SST and SDT permissible operating range)
Cfm – Cubic feet per minute (supply air)
EAT(db) – Entering air temperature (dry bulb)
EAT(wb) – Entering air temperature (wet bulb)
SHC – Sensible heat capacity
THC – Total capacity

Table 14 – COOLING CAPACITIES 2-STAGE COOLING 10 TONS

50TCQD12				AMBIENT TEMPERATURE											
				85			95			105			115		
				EAT (db)			EAT (db)			EAT (db)			EAT (db)		
				75	80	85	75	80	85	75	80	85	75	80	85
3000 Cfm	EAT (wb)	58	THC	102.8	102.8	121.0	96.3	96.3	115.8	90.1	90.1	109.5	83.5	83.5	102.9
			SHC	82.1	101.5	121.0	76.8	96.3	115.8	70.6	90.1	109.5	64.0	83.5	102.9
		62	THC	108.0	108.0	114.3	100.4	100.4	111.1	92.1	92.1	107.1	84.2	84.2	102.0
			SHC	75.4	94.9	114.3	72.2	91.7	111.1	68.1	87.6	107.1	63.1	82.5	102.0
		67	THC	120.5	120.5	120.5	113.5	113.5	113.5	104.9	104.9	104.9	95.2	95.2	95.2
			SHC	60.2	79.7	99.2	57.7	77.2	96.7	54.4	73.9	93.4	50.8	70.3	89.7
		72	THC	132.8	132.8	132.8	126.5	126.5	126.5	118.6	118.6	118.6	109.3	109.3	109.3
			SHC	44.5	64.0	83.4	42.2	61.7	81.2	39.5	59.0	78.5	36.4	55.9	75.3
		76	THC	–	142.0	142.0	–	136.0	136.0	–	129.1	129.1	–	120.3	120.3
			SHC	–	50.9	70.4	–	48.8	68.2	–	46.6	66.0	–	43.7	63.2
3500 Cfm	EAT (wb)	58	THC	108.2	108.2	130.9	102.5	102.5	125.2	95.5	95.5	118.2	88.3	88.3	111.0
			SHC	85.5	108.2	130.9	79.8	102.5	125.2	72.8	95.5	118.2	65.6	88.3	111.0
		62	THC	111.4	111.4	125.8	104.6	104.6	122.1	96.3	96.3	117.0	88.7	88.7	110.7
			SHC	80.4	103.1	125.8	76.7	99.4	122.1	71.6	94.3	117.0	65.3	88.0	110.7
		67	THC	123.4	123.4	123.4	116.3	116.3	116.3	107.9	107.9	107.9	97.5	97.5	98.9
			SHC	62.6	85.3	108.0	60.1	82.9	105.6	57.2	79.9	102.6	53.5	76.2	98.9
		72	THC	135.4	135.4	135.4	129.2	129.2	129.2	121.2	121.2	121.2	112.0	112.0	112.0
			SHC	44.2	67.0	89.7	42.2	64.9	87.6	39.5	62.2	85.0	36.5	59.3	82.0
		76	THC	–	144.6	144.6	–	138.4	138.4	–	131.3	131.3	–	–	–
			SHC	–	51.9	74.6	–	50.0	72.7	–	47.8	70.5	–	–	–
4000 Cfm	EAT (wb)	58	THC	112.7	112.7	138.7	106.9	106.9	132.9	99.9	99.9	125.9	92.3	92.3	118.2
			SHC	86.7	112.7	138.7	81.0	106.9	132.9	74.0	99.9	125.9	66.3	92.3	118.2
		62	THC	114.0	114.0	135.3	107.6	107.6	131.3	100.4	100.4	125.5	92.3	92.3	118.3
			SHC	83.4	109.3	135.3	79.3	105.3	131.3	73.6	99.6	125.5	66.4	92.3	118.3
		67	THC	125.4	125.4	125.4	118.2	118.2	118.2	109.5	109.5	111.2	99.1	99.1	107.7
			SHC	64.5	90.5	116.4	62.2	88.1	114.1	59.3	85.3	111.2	55.8	81.8	107.7
		72	THC	137.2	137.2	137.2	130.7	130.7	130.7	122.8	122.8	122.8	113.5	113.5	113.5
			SHC	43.6	69.6	95.5	41.7	67.6	93.6	39.2	65.1	91.1	36.3	62.2	88.2
		76	THC	–	146.3	146.3	–	139.9	139.9	–	132.5	132.5	–	–	–
			SHC	–	52.8	78.7	–	50.8	76.8	–	48.6	74.6	–	–	–
4500 Cfm	EAT (wb)	58	THC	115.9	115.9	145.2	110.4	110.4	139.6	103.4	103.4	132.6	95.4	95.4	124.6
			SHC	86.7	115.9	145.2	81.2	110.4	139.6	74.2	103.4	132.6	66.2	95.4	124.6
		62	THC	116.6	116.6	143.2	110.4	110.4	139.4	103.9	103.9	131.8	95.4	95.4	124.6
			SHC	84.8	114.0	143.2	81.0	110.2	139.4	73.4	102.6	131.8	66.2	95.4	124.6
		67	THC	126.5	126.5	126.5	119.5	119.5	122.2	110.6	110.6	119.6	100.2	100.2	116.1
			SHC	65.9	95.1	124.3	63.8	93.0	122.2	61.2	90.4	119.6	57.7	86.9	116.1
		72	THC	138.0	138.0	138.0	131.5	131.5	131.5	123.9	123.9	123.9	114.2	114.2	114.2
			SHC	42.7	71.9	101.1	40.8	70.0	99.2	38.5	67.7	96.9	35.6	64.8	94.0
		76	THC	–	147.3	147.3	–	140.6	140.6	–	–	–	–	–	–
			SHC	–	53.3	82.6	–	51.4	80.6	–	–	–	–	–	–
5000 Cfm	EAT (wb)	58	THC	118.4	118.4	150.9	112.9	112.9	145.4	105.9	105.9	138.4	97.8	97.8	130.2
			SHC	86.0	118.4	150.9	80.5	112.9	145.4	73.5	105.9	138.4	65.3	97.8	130.2
		62	THC	118.5	118.5	150.7	113.5	113.5	144.5	106.0	106.0	138.4	97.9	97.9	130.3
			SHC	85.8	118.3	150.7	79.6	112.0	144.5	73.5	106.0	138.4	65.4	97.9	130.3
		67	THC	126.9	126.9	131.8	120.0	120.0	130.0	111.1	111.1	127.4	100.8	100.8	123.9
			SHC	66.9	99.4	131.8	65.1	97.5	130.0	62.5	94.9	127.4	59.0	91.4	123.9
		72	THC	138.4	138.4	138.4	131.6	131.6	131.6	124.0	124.0	124.0	114.2	114.2	114.2
			SHC	41.4	73.8	106.3	39.5	71.9	104.4	37.3	69.8	102.2	34.6	67.0	99.5
		76	THC	–	147.7	147.7	–	140.9	140.9	–	–	–	–	–	–
			SHC	–	53.6	86.1	–	51.7	84.2	–	–	–	–	–	–

LEGEND

– – Do not operate in this region (Points are outside SST and SDT permissible operating range)
Cfm – Cubic feet per minute (supply air)
EAT(db) – Entering air temperature (dry bulb)
EAT(wb) – Entering air temperature (wet bulb)
SHC – Sensible heat capacity
THC – Total capacity

Table 15 – COOLING CAPACITIES 2-STAGE COOLING 12.5 TONS

50TCQD14				AMBIENT TEMPERATURE											
				85			95			105			115		
				EAT (DB)			EAT (DB)			EAT (DB)			EAT (DB)		
				75	80	85	75	80	85	75	80	85	75	80	85
3750 Cfm	EAT (wb)	58	THC	126.4	126.4	143.6	119.1	119.1	135.3	111.8	111.8	127.0	104.0	104.0	118.2
			SHC	109.2	126.4	143.6	102.9	119.1	135.3	96.5	111.8	127.0	89.8	104.0	118.2
		62	THC	134.5	134.5	138.4	124.7	124.7	133.4	114.9	114.9	128.1	105.8	105.8	120.8
			SHC	100.3	119.4	138.4	95.5	114.4	133.4	90.5	109.3	128.1	84.6	102.7	120.8
		67	THC	149.6	149.6	149.6	140.5	140.5	140.5	130.0	130.0	130.0	118.8	118.8	118.8
			SHC	83.5	102.5	121.4	79.8	98.9	118.1	75.4	94.6	113.7	70.8	89.9	109.1
		72	THC	161.4	161.4	161.4	155.2	155.2	155.2	146.4	146.4	146.4	135.7	135.7	135.7
			SHC	64.5	83.5	102.5	62.1	81.2	100.4	58.8	78.1	97.3	54.8	74.1	93.3
		76	THC	–	169.5	169.5	–	163.1	163.1	–	156.8	156.8	–	147.7	147.7
			SHC	–	68.1	88.7	–	65.7	86.2	–	63.4	83.7	–	60.3	80.3
4375 Cfm	EAT (wb)	58	THC	134.6	134.6	152.9	126.8	126.8	144.1	118.8	118.8	135.0	110.5	110.5	125.6
			SHC	116.3	134.6	152.9	109.6	126.8	144.1	102.7	118.8	135.0	95.5	110.5	125.6
		62	THC	139.9	139.9	151.3	130.0	130.0	145.7	120.7	120.7	138.1	111.2	111.2	130.1
			SHC	107.9	129.6	151.3	102.8	124.2	145.7	96.7	117.4	138.1	90.4	110.3	130.1
		67	THC	153.7	153.7	153.7	145.2	145.2	145.2	134.5	134.5	134.5	122.9	122.9	122.9
			SHC	87.9	109.4	131.0	84.8	106.8	128.8	80.6	102.6	124.7	75.8	97.9	120.0
		72	THC	164.6	164.6	164.6	158.2	158.2	158.2	150.5	150.5	150.5	139.9	139.9	139.9
			SHC	66.0	87.2	108.5	63.6	85.1	106.5	60.9	82.8	104.8	57.0	79.1	101.2
		76	THC	–	172.4	172.4	–	165.7	165.7	–	159.3	159.3	–	150.8	150.8
			SHC	–	70.2	93.5	–	67.8	91.0	–	65.7	88.8	–	62.8	85.8
5000 Cfm	EAT (wb)	58	THC	141.4	141.4	160.6	133.5	133.5	151.6	125.0	125.0	142.0	116.2	116.2	132.0
			SHC	122.1	141.4	160.6	115.3	133.5	151.6	108.0	125.0	142.0	100.4	116.2	132.0
		62	THC	144.4	144.4	162.1	135.4	135.4	155.1	125.9	125.9	147.1	116.4	116.4	137.6
			SHC	114.3	138.2	162.1	108.5	131.8	155.1	102.2	124.6	147.1	95.3	116.4	137.6
		67	THC	156.6	156.6	156.6	148.8	148.8	148.8	138.1	138.1	138.1	126.3	126.3	130.2
			SHC	91.7	115.6	139.5	89.3	113.9	138.6	85.3	110.2	135.0	80.6	105.4	130.2
		72	THC	167.0	167.0	167.0	160.5	160.5	160.5	153.3	153.3	153.3	142.9	142.9	142.9
			SHC	67.3	90.6	113.9	64.9	88.6	112.2	62.5	87.0	111.4	58.9	83.7	108.5
		76	THC	–	174.6	174.6	–	167.5	167.5	–	160.7	160.7	–	152.9	152.9
			SHC	–	72.2	98.1	–	69.8	95.6	–	67.4	92.9	–	64.8	90.2
5625 Cfm	EAT (wb)	58	THC	146.6	146.6	166.6	139.0	139.0	157.9	130.3	130.3	148.1	121.2	121.2	137.7
			SHC	126.6	146.6	166.6	120.0	139.0	157.9	112.6	130.3	148.1	104.7	121.2	137.7
		62	THC	148.4	148.4	169.8	139.9	139.9	163.3	130.5	130.5	154.3	121.3	121.3	143.4
			SHC	118.8	144.3	169.8	113.5	138.4	163.3	106.8	130.5	154.3	99.2	121.3	143.4
		67	THC	158.8	158.8	158.8	151.5	151.5	151.5	140.9	140.9	144.6	129.1	129.1	140.0
			SHC	95.1	121.2	147.3	93.3	120.4	147.4	89.6	117.1	144.6	85.0	112.5	140.0
		72	THC	168.9	168.9	168.9	162.1	162.1	162.1	155.3	155.3	155.3	145.1	145.1	145.1
			SHC	68.4	93.7	118.9	66.1	91.7	117.3	63.9	90.6	117.3	60.6	87.9	115.2
		76	THC	–	176.2	176.2	–	168.9	168.9	–	161.7	161.7	–	154.3	154.3
			SHC	–	73.9	101.8	–	71.3	98.8	–	68.8	96.1	–	66.6	94.1
6250 Cfm	EAT (wb)	58	THC	150.6	150.6	171.1	143.5	143.5	163.1	134.9	134.9	153.3	125.5	125.5	142.6
			SHC	130.0	150.6	171.1	123.9	143.5	163.1	116.5	134.9	153.3	108.4	125.5	142.6
		62	THC	151.4	151.4	176.1	143.7	143.7	169.9	135.1	135.1	159.7	125.6	125.6	148.5
			SHC	122.6	149.3	176.1	117.6	143.7	169.9	110.5	135.1	159.7	102.7	125.6	148.5
		67	THC	160.4	160.4	160.4	153.4	153.4	155.3	143.2	143.2	153.4	131.3	131.3	148.7
			SHC	98.2	126.4	154.5	96.8	126.0	155.3	93.6	123.5	153.4	88.9	118.8	148.7
		72	THC	170.3	170.3	170.3	163.4	163.4	163.4	156.7	156.7	156.7	146.8	146.8	146.8
			SHC	69.5	96.5	123.5	67.1	94.5	121.9	65.1	93.8	122.5	62.0	91.7	121.3
		76	THC	–	177.5	177.5	–	170.1	170.1	–	162.7	162.7	–	155.4	155.4
			SHC	–	75.2	104.7	–	72.6	101.8	–	70.2	99.2	–	68.2	97.7

LEGEND

– – Do not operate in this region (Points are outside SST and SDT permissible operating range)
Cfm – Cubic feet per minute (supply air)
EAT(db) – Entering air temperature (dry bulb)
EAT(wb) – Entering air temperature (wet bulb)
SHC – Sensible heat capacity
THC – Total capacity

Table 16 – HEATING CAPACITIES — 3 TONS

50TCQA04											
RETURN AIR (°F db)	CFM (STANDARD AIR)		TEMPERATURE AIR ENTERING OUTDOOR COIL (°F db AT 70% RH)								
			–10	0	10	17	30	40	47	50	60
55	900	Capacity	11.6	15.1	18.9	21.7	27.6	32.7	36.0	37.1	41.8
		Int. Cap.	10.7	13.9	17.4	19.8	24.2	32.7	36.0	37.1	41.8
	1200	Capacity	12.0	15.5	19.4	22.3	28.4	33.5	36.7	37.8	42.7
		Int. Cap.	11.1	14.3	17.8	20.3	24.9	33.5	36.7	37.8	42.7
	1500	Capacity	12.6	16.3	20.2	23.1	29.5	34.2	37.5	38.6	43.5
		Int. Cap.	11.6	15.0	18.5	21.1	25.8	34.2	37.5	38.6	43.5
70	900	Capacity	9.8	13.3	17.2	20.0	25.6	30.4	34.5	35.5	40.2
		Int. Cap.	9.0	12.3	15.7	18.2	22.5	30.4	34.5	35.5	40.2
	1200	Capacity	10.1	13.8	17.7	20.7	26.6	31.7	35.4	36.5	41.2
		Int. Cap.	9.3	12.7	16.3	18.8	23.3	31.7	35.4	36.5	41.2
	1500	Capacity	10.8	14.6	18.6	21.5	27.7	33.0	36.4	37.4	42.0
		Int. Cap.	10.0	13.4	17.1	19.6	24.3	33.0	36.4	37.4	42.0
80	900	Capacity	8.3	11.9	15.7	18.6	24.1	29.0	32.7	34.1	39.0
		Int. Cap.	7.7	10.9	14.4	16.9	21.2	29.0	32.7	34.1	39.0
	1200	Capacity	8.6	12.4	16.3	19.3	25.1	30.2	34.3	35.4	40.1
		Int. Cap.	8.0	11.4	15.0	17.6	22.0	30.2	34.3	35.4	40.1
	1500	Capacity	9.3	13.2	17.2	20.2	26.2	31.4	35.5	36.5	41.1
		Int. Cap.	8.6	12.1	15.8	18.4	23.0	31.4	35.5	36.5	41.1

– Indicates standard rating point

LEGEND

Capacity – Instantaneous Capacity (1000 Btuh) includes indoor fan motor heat @AHRI static conditions

Int. Cap. – Integrated Capacity is Instantaneous Capacity minus the effects of frost on the outdoor coil and the heat required to defrost

RH – Relative Humidity

db – Dry Bulb

Table 17 – HEATING CAPACITIES — 4 TONS

50TCQA05											
RETURN AIR (°F db)	CFM (STANDARD AIR)		TEMPERATURE AIR ENTERING OUTDOOR COIL (°F db AT 70% RH)								
			–10	0	10	17	30	40	47	50	60
55	1200	Capacity	17.5	22.0	26.6	30.0	36.8	42.6	47.1	48.9	55.3
		Int. Cap.	16.2	20.2	24.4	27.3	32.2	42.6	47.1	48.9	55.3
	1600	Capacity	17.5	22.1	26.7	30.2	37.3	43.5	47.9	49.8	56.1
		Int. Cap.	16.2	20.3	24.5	27.5	32.7	43.5	47.9	49.8	56.1
	2000	Capacity	18.5	23.1	27.8	31.3	38.7	44.9	49.1	50.9	57.1
		Int. Cap.	17.1	21.3	25.5	28.6	33.9	44.9	49.1	50.9	57.1
70	1200	Capacity	15.8	20.3	25.0	28.3	35.0	40.5	44.7	46.7	53.0
		Int. Cap.	14.6	18.7	22.9	25.8	30.6	40.5	44.7	46.7	53.0
	1600	Capacity	15.9	20.5	25.3	28.7	35.6	41.3	45.8	47.8	53.9
		Int. Cap.	14.7	18.9	23.2	26.1	31.2	41.3	45.8	47.8	53.9
	2000	Capacity	17.0	21.7	26.5	29.9	36.9	42.9	47.3	49.1	55.2
		Int. Cap.	15.7	20.0	24.3	27.3	32.4	42.9	47.3	49.1	55.2
80	1200	Capacity	14.2	18.8	23.5	26.9	33.6	39.0	43.2	45.1	51.4
		Int. Cap.	13.1	17.3	21.6	24.6	29.4	39.0	43.2	45.1	51.4
	1600	Capacity	14.4	19.1	23.9	27.4	34.2	39.8	44.2	46.1	52.4
		Int. Cap.	13.3	17.6	22.0	25.0	30.0	39.8	44.2	46.1	52.4
	2000	Capacity	15.5	20.3	25.2	28.7	35.6	41.4	45.9	47.8	53.8
		Int. Cap.	14.3	18.7	23.1	26.1	31.2	41.4	45.9	47.8	53.8

– Indicates standard rating point

LEGEND

Capacity – Instantaneous Capacity (1000 Btuh) includes indoor fan motor heat @AHRI static conditions

Int. Cap. – Integrated Capacity is Instantaneous Capacity minus the effects of frost on the outdoor coil and the heat required to defrost

RH – Relative Humidity

db – Dry Bulb

Table 18 – HEATING CAPACITY — 5 TONS

50TCQ06											
RETURN AIR (°F DB)	CFM (STANDARD AIR)		TEMPERATURE AIR ENTERING OUTDOOR COIL (°F db AT 70% RH)								
			–10	0	10	17	30	40	47	50	60
55	1500	Capacity	22.7	28.3	34.2	38.6	47.4	54.3	60.0	62.6	70.3
		Int. Cap.	21.0	26.1	31.4	35.2	41.5	54.3	60.0	62.6	70.3
	2000	Capacity	22.8	28.5	34.4	38.9	47.9	55.3	60.9	63.1	70.9
		Int. Cap.	21.1	26.2	31.6	35.4	42.0	55.3	60.9	63.1	70.9
	2500	Capacity	24.2	30.0	35.9	40.4	49.6	56.9	62.3	64.4	72.0
		Int. Cap.	22.4	27.6	33.0	36.8	43.5	56.9	62.3	64.4	72.0
70	1500	Capacity	19.9	25.8	31.9	36.3	45.2	51.7	57.6	60.0	67.9
		Int. Cap.	18.4	23.7	29.3	33.1	39.6	51.7	57.6	60.0	67.9
	2000	Capacity	20.1	26.1	32.3	36.7	45.8	52.9	58.4	61.0	68.8
		Int. Cap.	18.6	24.0	29.6	33.5	40.1	52.9	58.4	61.0	68.8
	2500	Capacity	21.5	27.6	33.8	38.3	47.5	54.7	60.4	62.7	70.2
		Int. Cap.	19.9	25.4	31.1	35.0	41.6	54.7	60.4	62.7	70.2
80	1500	Capacity	17.6	23.7	30.0	34.6	43.5	50.2	55.7	58.2	66.1
		Int. Cap.	16.3	21.9	27.6	31.5	38.1	50.2	55.7	58.2	66.1
	2000	Capacity	17.8	24.1	30.5	35.1	44.3	51.2	56.6	59.4	67.2
		Int. Cap.	16.5	22.2	28.0	32.0	38.8	51.2	56.6	59.4	67.2
	2500	Capacity	19.3	25.6	32.1	36.8	46.0	53.1	58.8	61.1	68.8
		Int. Cap.	17.8	23.6	29.4	33.5	40.3	53.1	58.8	61.1	68.8

– Indicates standard rating point

LEGEND

Capacity – Instantaneous Capacity (1000 Btuh) includes indoor fan motor heat @AHRI static conditions

Int. Cap. – Integrated Capacity is Instantaneous Capacity minus the effects of frost on the outdoor coil and the heat required to defrost

RH – Relative Humidity

db – Dry Bulb

Table 19 – HEATING CAPACITY — 6 TONS

50TCQ07											
RETURN AIR (°F DB)	CFM (STANDARD AIR)		TEMPERATURE AIR ENTERING OUTDOOR COIL (°F db AT 70% RH)								
			–10	0	10	17	30	40	47	50	60
55	1800	Capacity	22.4	29.8	37.1	42.5	53.5	62.4	68.6	71.2	80.3
		Int. Cap.	20.7	27.4	34.1	38.8	46.9	62.4	68.6	71.2	80.3
	2400	Capacity	24.6	32.1	39.6	45.1	56.4	65.6	71.5	74.2	83.8
		Int. Cap.	22.7	29.5	36.3	41.1	49.4	65.6	71.5	74.2	83.8
	3000	Capacity	27.4	35.0	42.5	48.2	59.5	68.6	74.5	77.2	86.8
		Int. Cap.	25.3	32.2	39.0	43.9	52.1	68.6	74.5	77.2	86.8
70	1800	Capacity	17.7	25.5	33.2	38.6	49.5	58.5	65.0	67.7	76.5
		Int. Cap.	16.4	23.5	30.5	35.2	43.4	58.5	65.0	67.7	76.5
	2400	Capacity	19.9	27.9	35.8	41.4	52.7	62.0	68.4	71.0	80.3
		Int. Cap.	18.4	25.7	32.9	37.7	46.2	62.0	68.4	71.0	80.3
	3000	Capacity	22.8	30.9	38.9	44.5	56.1	65.5	71.7	74.4	83.9
		Int. Cap.	21.1	28.4	35.7	40.6	49.2	65.5	71.7	74.4	83.9
80	1800	Capacity	13.9	21.9	29.9	35.5	46.2	55.3	62.0	64.9	73.7
		Int. Cap.	12.8	20.2	27.4	32.3	40.5	55.3	62.0	64.9	73.7
	2400	Capacity	16.0	24.4	32.6	38.4	49.6	59.0	65.8	68.6	77.5
		Int. Cap.	14.8	22.5	29.9	35.0	43.5	59.0	65.8	68.6	77.5
	3000	Capacity	18.8	27.4	35.8	41.6	53.1	62.7	69.4	72.1	81.4
		Int. Cap.	17.4	25.2	32.8	37.9	46.6	62.7	69.4	72.1	81.4

– Indicates standard rating point

LEGEND

Capacity – Instantaneous Capacity (1000 Btuh) includes indoor fan motor heat @AHRI static conditions

Int. Cap. – Integrated Capacity is Instantaneous Capacity minus the effects of frost on the outdoor coil and the heat required to defrost

RH – Relative Humidity

db – Dry Bulb

Table 20 – HEATING CAPACITY 7.5 TONS

50TCQD08											
RETURN AIR (°F db)	CFM (STANDARD AIR)		TEMPERATURE AIR ENTERING OUTDOOR COIL (°F db AT 70% RH)								
			–10	0	10	17	30	40	47	50	60
55	2250	Capacity			46.9	53.5	66.3	77.2	86.2	89.4	103.3
		Int. Cap.			43.1	48.7	58.1	77.2	86.2	89.4	103.3
	3000	Capacity					68.5	80.2	89.8	93.1	106.7
		Int. Cap.					60.0	80.2	89.8	93.1	106.7
	3750	Capacity				58.9	72.5	84.6	94.5	97.6	110.6
		Int. Cap.				53.7	63.5	84.6	94.5	97.6	110.6
70	2250	Capacity	25.9	34.6	43.6	50.2	62.7	73.0	81.4	84.5	98.0
		Int. Cap.	23.9	31.8	40.0	45.7	55.0	73.0	81.4	84.5	98.0
	3000	Capacity	27.4	36.2	45.5	52.2	65.1	75.9	85.0	88.2	102.1
		Int. Cap.	25.3	33.4	41.8	47.6	57.0	75.9	85.0	88.2	102.1
	3750	Capacity	31.0	40.0	49.3	56.1	69.1	80.4	89.8	93.2	106.5
		Int. Cap.	28.6	36.8	45.3	51.1	60.6	80.4	89.8	93.2	106.5
80	2250	Capacity	22.5	31.5	40.7	47.3	60.1	70.3	78.2	81.2	94.3
		Int. Cap.	20.8	29.0	37.3	43.1	52.6	70.3	78.2	81.2	94.3
	3000	Capacity	24.1	33.3	42.7	49.5	62.5	73.1	81.6	84.7	98.6
		Int. Cap.	22.3	30.6	39.2	45.2	54.8	73.1	81.6	84.7	98.6
	3750	Capacity	27.8	37.1	46.6	53.5	66.7	77.5	86.4	89.7	103.4
		Int. Cap.	25.7	34.1	42.8	48.8	58.4	77.5	86.4	89.7	103.4

– Indicates standard rating point – Indicates operation not permissible

LEGEND

Capacity – Instantaneous Capacity (1000 Btuh) includes indoor fan motor heat @AHRI static conditions

Int. Cap. – Integrated Capacity is Instantaneous Capacity minus the effects of frost on the outdoor coil and the heat required to defrost

RH – Relative Humidity

dD – Dry Bulb

Table 21 – HEATING CAPACITY 8.5 TONS

50TCQD09											
RETURN AIR (°F db)	CFM (STANDARD AIR)		TEMPERATURE AIR ENTERING OUTDOOR COIL (°F db AT 70% RH)								
			–10	0	10	17	30	40	47	50	60
55	2550	Capacity	33.1	42.7	52.7	60.0	75.6	87.4	97.5	100.6	113.8
		Int. Cap.	30.7	39.3	48.3	54.7	66.2	87.4	97.5	100.6	113.8
	3400	Capacity	34.4	44.0	54.2	61.8	77.5	89.9	100.2	103.1	115.7
		Int. Cap.	31.8	40.5	49.8	56.4	67.9	89.9	100.2	103.1	115.7
	4250	Capacity	38.0	47.7	58.0	65.8	81.5	94.2	103.9	106.6	118.2
		Int. Cap.	35.2	43.9	53.2	60.0	71.4	94.2	103.9	106.6	118.2
70	2550	Capacity	29.0	38.6	48.6	55.9	70.7	83.5	93.1	96.2	109.5
		Int. Cap.	26.8	35.5	44.6	51.0	61.9	83.5	93.1	96.2	109.5
	3400	Capacity	30.3	40.2	50.4	58.0	73.5	86.1	96.5	99.2	111.9
		Int. Cap.	28.0	37.0	46.3	52.9	64.4	86.1	96.5	99.2	111.9
	4250	Capacity	34.0	44.0	54.4	62.1	77.8	90.5	100.5	103.3	115.2
		Int. Cap.	31.5	40.5	50.0	56.6	68.2	90.5	100.5	103.3	115.2
80	2550	Capacity	25.3	35.0	45.2	52.6	67.1	80.0	90.0	93.2	106.5
		Int. Cap.	23.4	32.2	41.5	48.0	58.8	80.0	90.0	93.2	106.5
	3400	Capacity	26.6	36.7	47.2	54.8	69.8	83.0	93.1	96.2	109.2
		Int. Cap.	24.6	33.8	43.3	50.0	61.2	83.0	93.1	96.2	109.2
	4250	Capacity	30.4	40.6	51.2	59.0	74.4	87.7	97.7	100.7	112.8
		Int. Cap.	28.1	37.4	47.0	53.8	65.1	87.7	97.7	100.7	112.8

– Indicates standard rating point

LEGEND

Capacity – Instantaneous Capacity (1000 Btuh) includes indoor fan motor heat @AHRI static conditions

Int. Cap. – Integrated Capacity is Instantaneous Capacity minus the effects of frost on the outdoor coil and the heat required to defrost

RH – Relative Humidity

db – Dry Bulb

Table 22 – HEATING CAPACITY — 10 TONS

50TCQD12											
RETURN AIR (°F db)	CFM (STANDARD AIR)		TEMPERATURE AIR ENTERING OUTDOOR COIL (°F db AT 70% RH)								
			–10	0	10	17	30	40	47	50	60
55	3000	Capacity	41.8	52.4	64.1	72.8	90.4	105.3	118.0	121.9	140.3
		Int. Cap.	38.7	48.2	58.8	66.3	79.2	105.3	118.0	121.9	140.3
	4000	Capacity	43.3	54.0	66.0	74.5	92.7	107.8	120.2	124.1	142.1
		Int. Cap.	40.0	49.7	60.6	68.0	81.2	107.8	120.2	124.1	142.1
	5000	Capacity	46.9	57.7	69.7	78.2	96.6	111.5	123.5	127.3	142.3
		Int. Cap.	43.3	53.1	64.0	71.3	84.6	111.5	123.5	127.3	142.3
70	3000	Capacity	37.4	48.2	59.7	68.5	86.2	100.6	113.0	117.1	135.3
		Int. Cap.	34.6	44.4	54.8	62.4	75.5	100.6	113.0	117.1	135.3
	4000	Capacity	39.0	49.9	61.6	70.7	88.5	103.3	115.9	119.8	137.6
		Int. Cap.	36.1	45.9	56.6	64.5	77.5	103.3	115.9	119.8	137.6
	5000	Capacity	42.6	53.7	65.5	74.8	92.5	107.5	119.6	123.4	140.6
		Int. Cap.	39.4	49.4	60.1	68.2	81.1	107.5	119.6	123.4	140.6
80	3000	Capacity	33.9	44.8	56.5	65.1	83.2	97.3	109.5	113.4	131.6
		Int. Cap.	31.4	41.3	51.8	59.3	72.9	97.3	109.5	113.4	131.6
	4000	Capacity	35.5	46.6	58.5	67.3	85.5	100.0	112.5	116.5	134.2
		Int. Cap.	32.8	42.9	53.7	61.4	75.0	100.0	112.5	116.5	134.2
	5000	Capacity	39.1	50.4	62.3	71.3	89.6	104.3	116.6	120.4	137.5
		Int. Cap.	36.2	46.4	57.2	65.0	78.5	104.3	116.6	120.4	137.5

– Indicates standard rating point

LEGEND

Capacity – Instantaneous Capacity (1000 Btuh) includes indoor fan motor heat @AHRI static conditions

Int. Cap. – Integrated Capacity is Instantaneous Capacity minus the effects of frost on the outdoor coil and the heat required to defrost

RH – Relative Humidity

db – Dry Bulb

Table 23 – HEATING CAPACITY — 12.5 TONS

50TCQD14											
RETURN AIR (°F dB)	CFM (STANDARD AIR)		TEMPERATURE AIR ENTERING OUTDOOR COIL (°F db AT 70% RH)								
			–10	0	10	17	30	40	47	50	60
55	3750	Capacity	33.7	47.5	69.8	83.1	109.3	131.7	149.7	155.6	180.1
		Int. Cap.	31.2	43.7	64.0	75.8	95.8	131.7	149.7	155.6	180.1
	5000	Capacity	35.7	49.7	72.4	85.8	112.9	136.1	152.9	158.1	178.7
		Int. Cap.	33.0	45.7	66.5	78.2	99.0	136.1	152.9	158.1	178.7
	6250	Capacity	38.9	53.0	76.2	89.5	117.1	139.4	153.5	158.0	175.6
		Int. Cap.	36.0	48.8	70.0	81.6	102.6	139.4	153.5	158.0	175.6
70	3750	Capacity	24.4	38.2	59.4	73.1	99.8	121.2	138.5	144.5	169.7
		Int. Cap.	22.6	35.2	54.5	66.7	87.4	121.2	138.5	144.5	169.7
	5000	Capacity	26.4	40.4	62.1	76.6	103.2	125.4	143.0	148.6	170.3
		Int. Cap.	24.4	37.2	57.0	69.8	90.4	125.4	143.0	148.6	170.3
	6250	Capacity	29.6	43.8	65.9	80.7	107.3	129.8	145.5	150.4	169.1
		Int. Cap.	27.3	40.3	60.5	73.6	94.0	129.8	145.5	150.4	169.1
80	3750	Capacity	17.5	31.4	52.6	65.6	93.3	114.2	131.1	137.0	162.4
		Int. Cap.	16.2	28.9	48.3	59.8	81.8	114.2	131.1	137.0	162.4
	5000	Capacity	19.3	33.4	55.2	68.7	96.6	118.2	135.7	141.5	164.0
		Int. Cap.	17.8	30.8	50.7	62.6	84.6	118.2	135.7	141.5	164.0
	6250	Capacity	22.4	40.3	58.8	72.7	100.6	122.6	139.3	144.3	163.8
		Int. Cap.	20.7	37.1	54.0	66.3	88.2	122.6	139.3	144.3	163.8

– Indicates standard rating point

LEGEND

Capacity – Instantaneous Capacity (1000 Btuh) includes indoor fan motor heat @AHRI static conditions

Int. Cap. – Integrated Capacity is Instantaneous Capacity minus the effects of frost on the outdoor coil and the heat required to defrost

RH – Relative Humidity

db – Dry Bulb

Table 24 – STATIC PRESSURE ADDERS (Factory Options and/or Accessories)

Economizer

3 – 6 TONS											
CFM (in. wg)	600	800	1000	1250	1500	1750	2000	2250	2500	2750	3000
Vertical Economizer	0.01	0.02	0.04	0.05	0.07	0.09	0.12	0.15	0.18	0.22	0.26
Horizontal Economizer	0.02	0.03	0.04	0.06	0.08	0.10	0.13	0.15	0.18	0.23	0.28

7.5 – 12.5 TONS																
CFM (in. wg)	2250	2500	2750	3000	3250	3500	3750	4000	4250	4500	4750	5000	5250	5500	5750	6000
Vertical Economizer	0.06	0.08	0.09	0.12	0.13	0.15	0.17	0.20	0.22	0.25	0.29	0.33	0.36	0.40	0.44	0.48
Horizontal Economizer	0.08	0.10	0.13	0.15	0.18	0.21	0.25	0.28	0.30	0.34	0.39	0.43	0.47	0.51	0.56	0.60

Electric Heaters

3 – 6 TONS										
CFM (in. wg)	600	900	1200	1400	1600	1800	2000	2200	2400	2600
1 Electric Heater Module	0.03	0.05	0.07	0.09	0.09	0.10	0.11	0.11	0.12	0.13
2 Electric Heater Modules	0.13	0.15	0.16	0.16	0.16	0.17	0.17	0.17	0.18	0.18

7.5 – 12.5 TONS																
CFM (in. wg)	2250	2500	2750	3000	3250	3500	3750	4000	4250	4500	4750	5000	5250	5500	5750	6000
1 Electric Heater Module	0.03	0.04	0.04	0.05	0.06	0.07	0.08	0.09	0.10	0.11	0.12	0.13	0.14	0.15	0.16	0.18
2 Electric Heater Modules	0.04	0.05	0.05	0.06	0.07	0.08	0.09	0.10	0.11	0.12	0.13	0.15	0.16	0.17	0.19	0.20

General fan performance notes:

1. Interpolation is permissible. Do not extrapolate.
2. External static pressure is the static pressure difference between the return duct and the supply duct plus the static pressure caused by any FIOPs or accessories.
3. Tabular data accounts for pressure loss due to clean filters, unit casing, and wet coils. Factory options and accessories may add static pressure losses, as shown in the above tables. Selection software is available, through your salesperson, to help you select the best motor/drive combination for your application.
4. The Fan Performance tables offer motor/drive recommendations. In cases when two motor/drive combinations would work, Carrier recommended the lower horsepower option.
5. For information on the electrical properties of Carrier motors, please see the Electrical information section of this book.
6. For more information on the performance limits of Carrier motors, see the application data section of this book.

FAN PERFORMANCE

Table 25 – 50TCQA04 ELECTRIC DRIVE, X13 MOTOR, 3 TON HORIZONTAL SUPPLY

SPEED (TORQUE) TAP	CFM	ESP	BHP
1	900	0.70	0.31
	975	0.60	0.30
	1050	0.50	0.29
	1125	0.39	0.27
	1200	0.29	0.26
	1275	0.21	0.24
	1350	0.12	0.23
	1425	0.03	0.21
	1500	–	–
2	900	0.85	0.37
	975	0.76	0.36
	1050	0.66	0.36
	1125	0.55	0.34
	1200	0.46	0.34
	1275	0.36	0.32
	1350	0.27	0.31
	1425	0.17	0.29
	1500	0.07	0.27
3	900	1.02	0.44
	975	0.94	0.45
	1050	0.86	0.45
	1125	0.79	0.45
	1200	0.71	0.45
	1275	0.61	0.44
	1350	0.51	0.43
	1425	0.40	0.41
	1500	0.29	0.39
4	900	1.12	0.49
	975	1.06	0.50
	1050	1.00	0.52
	1125	0.95	0.53
	1200	0.89	0.54
	1275	0.80	0.53
	1350	0.70	0.52
	1425	0.57	0.50
	1500	0.46	0.49
5	900	1.18	0.52
	975	1.14	0.54
	1050	1.10	0.56
	1125	1.06	0.58
	1200	1.02	0.60
	1275	0.98	0.63
	1350	0.94	0.65
	1425	0.90	0.68
	1500	0.87	0.71

Table 26 – 50TCQA04 ELECTRIC DRIVE, X13 MOTOR, 3 TON VERTICAL SUPPLY

SPEED (TORQUE) TAP	CFM	ESP	BHP
1	900	0.44	0.22
	975	0.35	0.21
	1050	0.24	0.20
	1125	0.15	0.19
	1200	0.08	0.19
	1275	0.02	0.18
	1350	–	–
	1425	–	–
	1500	–	–
2	900	0.64	0.30
	975	0.53	0.29
	1050	0.42	0.28
	1125	0.32	0.27
	1200	0.24	0.26
	1275	0.15	0.25
	1350	0.07	0.24
	1425	–	–
	1500	–	–
3	900	0.93	0.42
	975	0.80	0.41
	1050	0.68	0.39
	1125	0.57	0.38
	1200	0.47	0.37
	1275	0.35	0.36
	1350	0.26	0.34
	1425	0.13	0.33
	1500	0.08	0.32
4	900	1.04	0.47
	975	0.92	0.46
	1050	0.80	0.45
	1125	0.71	0.45
	1200	0.62	0.45
	1275	0.52	0.44
	1350	0.43	0.44
	1425	0.27	0.42
	1500	0.22	0.41
5	900	1.10	0.50
	975	1.00	0.49
	1050	0.90	0.49
	1125	0.82	0.50
	1200	0.75	0.51
	1275	0.70	0.54
	1350	0.67	0.57
	1425	0.60	0.60
	1500	0.62	0.64

FAN PERFORMANCE (cont.)

Table 27 – 50TCQA05 ELECTRIC DRIVE, X13 MOTOR, 4 TON HORIZONTAL SUPPLY

SPEED (TORQUE) TAP	CFM	ESP	BHP
1	1200	0.75	0.48
	1300	0.63	0.46
	1400	0.48	0.44
	1500	0.33	0.41
	1600	0.19	0.39
	1700	0.05	0.36
	1800	–	–
	1900	–	–
	2000	–	–
2	1200	0.97	0.58
	1300	0.88	0.59
	1400	0.77	0.59
	1500	0.64	0.59
	1600	0.50	0.57
	1700	0.36	0.54
	1800	0.21	0.52
	1900	0.06	0.49
	2000	–	–
3	1200	0.98	0.59
	1300	0.91	0.60
	1400	0.82	0.62
	1500	0.71	0.62
	1600	0.58	0.61
	1700	0.45	0.60
	1800	0.31	0.58
	1900	0.16	0.56
	2000	0.03	0.52
4	1200	0.98	0.59
	1300	0.92	0.62
	1400	0.86	0.64
	1500	0.79	0.66
	1600	0.70	0.68
	1700	0.62	0.70
	1800	0.52	0.71
	1900	0.37	0.69
	2000	0.21	0.67
5	1200	1.02	0.60
	1300	0.97	0.64
	1400	0.92	0.67
	1500	0.87	0.71
	1600	0.82	0.75
	1700	0.77	0.79
	1800	0.71	0.84
	1900	0.65	0.88
	2000	0.58	0.92

Table 28 – 50TCQA05 ELECTRIC DRIVE, X13 MOTOR, 4 TON VERTICAL SUPPLY

SPEED (TORQUE) TAP	CFM	ESP	BHP
1	1200	0.50	0.39
	1300	0.36	0.37
	1400	0.19	0.35
	1500	0.10	0.33
	1600	0.02	0.32
	1700	–	–
	1800	–	–
	1900	–	–
	2000	–	–
2	1200	0.80	0.55
	1300	0.69	0.55
	1400	0.50	0.54
	1500	0.38	0.52
	1600	0.24	0.50
	1700	0.13	0.48
	1800	0.01	0.46
	1900	–	–
	2000	–	–
3	1200	0.89	0.59
	1300	0.78	0.61
	1400	0.59	0.60
	1500	0.46	0.58
	1600	0.31	0.56
	1700	0.20	0.54
	1800	0.07	0.52
	1900	–	–
	2000	–	–
4	1200	0.89	0.60
	1300	0.80	0.63
	1400	0.67	0.64
	1500	0.57	0.65
	1600	0.43	0.65
	1700	0.31	0.66
	1800	0.23	0.65
	1900	0.12	0.63
	2000	0.01	0.62
5	1200	0.94	0.62
	1300	0.85	0.65
	1400	0.73	0.68
	1500	0.65	0.70
	1600	0.55	0.72
	1700	0.47	0.75
	1800	0.42	0.78
	1900	0.39	0.82
	2000	0.38	0.88

FAN PERFORMANCE (cont.)

Table 29 – 50TCQA06 ELECTRIC DRIVE, X13 MOTOR, 5 TON HORIZONTAL SUPPLY

SPEED (TORQUE) TAP	CFM	ESP	BHP
1	1500	1.19	0.74
	1625	1.01	0.73
	1750	0.82	0.70
	1875	0.60	0.66
	2000	0.38	0.62
	2125	0.16	0.57
	2250	–	–
	2375	–	–
	2500	–	–
2	1500	1.40	0.86
	1625	1.25	0.88
	1750	1.08	0.86
	1875	0.90	0.84
	2000	0.67	0.80
	2125	0.44	0.75
	2250	0.20	0.71
	2375	–	–
	2500	–	–
3	1500	1.41	0.87
	1625	1.28	0.89
	1750	1.13	0.89
	1875	0.96	0.88
	2000	0.74	0.85
	2125	0.51	0.80
	2250	0.27	0.75
	2375	0.02	0.70
	2500	–	–
4	1500	1.44	0.89
	1625	1.35	0.93
	1750	1.24	0.96
	1875	1.11	0.98
	2000	0.90	0.96
	2125	0.69	0.92
	2250	0.43	0.86
	2375	0.17	0.81
	2500	–	–
5	1500	1.49	0.90
	1625	1.38	0.95
	1750	1.28	1.00
	1875	1.18	1.05
	2000	1.11	1.09
	2125	0.97	1.11
	2250	0.72	1.07
	2375	0.47	1.02
	2500	0.20	0.96

Table 30 – 50TCQA06 ELECTRIC DRIVE, X13 MOTOR, 5 TON VERTICAL SUPPLY

SPEED (TORQUE) TAP	CFM	ESP	BHP
1	1500	1.00	0.70
	1625	0.72	0.65
	1750	0.46	0.60
	1875	0.28	0.55
	2000	0.14	0.51
	2125	0.00	0.52
	2250	–	–
	2375	–	–
	2500	–	–
2	1500	1.18	0.88
	1625	1.00	0.90
	1750	0.75	0.87
	1875	0.51	0.83
	2000	0.30	0.79
	2125	0.13	0.75
	2250	–	–
	2375	–	–
	2500	–	–
3	1500	1.19	0.88
	1625	1.03	0.91
	1750	0.80	0.90
	1875	0.56	0.87
	2000	0.35	0.83
	2125	0.19	0.80
	2250	0.01	0.77
	2375	–	–
	2500	–	–
4	1500	1.25	0.89
	1625	1.09	0.93
	1750	0.89	0.96
	1875	0.65	0.94
	2000	0.45	0.93
	2125	0.26	0.89
	2250	0.12	0.86
	2375	–	–
	2500	–	–
5	1500	1.26	0.90
	1625	1.16	0.96
	1750	0.99	1.01
	1875	0.80	1.05
	2000	0.67	1.07
	2125	0.48	1.07
	2250	0.26	1.03
	2375	0.11	1.00
	2500	–	–

Table 31 – 50TCQA04 **3 TON HORIZONTAL SUPPLY**

CFM	AVAILABLE EXTERNAL STATIC PRESSURE (IN. WG)									
	0.2		0.4		0.6		0.8		1.0	
	RPM	BHP	RPM	BHP	RPM	BHP	RPM	BHP	RPM	BHP
900	574	0.13	707	0.23	817	0.34	913	0.47	999	0.61
975	597	0.15	727	0.25	835	0.37	929	0.50	1015	0.64
1050	621	0.18	747	0.28	853	0.40	946	0.53	1030	0.68
1125	646	0.20	768	0.31	872	0.43	964	0.57	1047	0.72
1200	671	0.23	790	0.34	892	0.47	982	0.61	1064	0.76
1275	696	0.26	812	0.38	912	0.51	1001	0.65	1082	0.81
1350	723	0.30	835	0.42	933	0.55	1020	0.70	1100	0.86
1425	749	0.34	859	0.46	955	0.60	1040	0.75	1119	0.91
1500	776	0.38	883	0.51	977	0.65	1061	0.80	1138	0.97

Med static – 819–1251, 1.5 HP (motor is new 1.7 HP 3 ph)
High static – 1035–1466, 2.0 max HP (motor is 2.4 HP 3 ph)

50TCQ

CFM	AVAILABLE EXTERNAL STATIC PRESSURE (IN. WG)									
	1.2		1.4		1.6		1.8		2.0	
	RPM	BHP	RPM	BHP	RPM	BHP	RPM	BHP	RPM	BHP
900	1078	0.77	1151	0.93	1220	1.11	1284	1.30	1346	1.49
975	1093	0.80	1165	0.97	1233	1.15	1297	1.33	1358	1.53
1050	1108	0.84	1180	1.01	1247	1.19	1311	1.38	1371	1.58
1125	1123	0.88	1195	1.05	1261	1.23	1325	1.42	1385	1.62
1200	1140	0.92	1210	1.10	1276	1.28	1339	1.47	1399	1.68
1275	1157	0.97	1226	1.15	1292	1.33	1354	1.53	1414	1.73
1350	1174	1.02	1243	1.20	1308	1.39	1370	1.59	1429	1.80
1425	1192	1.08	1260	1.26	1325	1.45	1386	1.65	1444	1.86
1500	1210	1.14	1278	1.33	1342	1.52	1403	1.72	1461	1.93

Med static – 819–1251, 1.5 HP (motor is new 1.7 HP 3 ph)
High static – 1035–1466, 2.0 max HP (motor is 2.4 HP 3 ph)

Table 32 – 50TCQA04 **3 TON VERTICAL SUPPLY**

CFM	AVAILABLE EXTERNAL STATIC PRESSURE (IN. WG)									
	0.2		0.4		0.6		0.8		1.0	
	RPM	BHP	RPM	BHP	RPM	BHP	RPM	BHP	RPM	BHP
900	594	0.15	740	0.25	867	0.37	981	0.52	1084	0.68
975	618	0.17	758	0.28	881	0.40	991	0.55	1092	0.71
1050	642	0.19	777	0.30	896	0.43	1003	0.58	1102	0.75
1125	668	0.22	797	0.34	912	0.47	1017	0.62	1113	0.79
1200	695	0.25	818	0.37	930	0.51	1032	0.66	1126	0.83
1275	722	0.29	841	0.41	949	0.55	1048	0.71	1140	0.88
1350	750	0.33	864	0.46	968	0.60	1065	0.76	1155	0.93
1425	778	0.37	888	0.50	989	0.65	1083	0.81	1171	0.99
1500	807	0.42	913	0.56	1011	0.71	1103	0.87	1188	1.05

Med static – 819–1251, 1.5 HP (motor is new 1.7 HP 3 ph)
High static – 1035–1466, 2.0 max HP (motor is 2.4 HP 3 ph)

CFM	AVAILABLE EXTERNAL STATIC PRESSURE (IN. WG)									
	1.2		1.4		1.6		1.8		2.0	
	RPM	BHP	RPM	BHP	RPM	BHP	RPM	BHP	RPM	BHP
900	1180	0.86	1269	1.05	1354	1.25	1434	1.47	**1511**	**1.70**
975	1186	0.89	1275	1.08	1358	1.29	1437	1.51	**1513**	**1.74**
1050	1194	0.92	1281	1.12	1363	1.32	1441	1.54	**1516**	**1.78**
1125	1204	0.97	1289	1.16	1370	1.37	1447	1.59	**1520**	**1.82**
1200	1215	1.01	1298	1.21	1378	1.42	1454	1.64	**1526**	**1.87**
1275	1227	1.06	1309	1.26	1387	1.47	1462	1.69	**1533**	**1.92**
1350	1240	1.12	1321	1.32	1397	1.53	**1471**	**1.75**	**1541**	**1.99**
1425	1254	1.18	1333	1.38	1409	1.59	**1481**	**1.82**	–	–
1500	1270	1.24	1347	1.45	1421	1.66	**1492**	**1.89**	–	–

Med static – 819–1251, 1.5 HP (motor is new 1.7 HP 3 ph)
High static – 1035–1466, 2.0 max HP (motor is 2.4 HP 3 ph)

Bold Face indicates field–supplied drive

Recommend using field–supplied fan pulley (part no. KR11AD561), motor pulley (part no. KR11HY181) and belt (part no. KR29AF041).

Table 33 – 50TCQA05 **4 TON HORIZONTAL SUPPLY**

CFM	AVAILABLE EXTERNAL STATIC PRESSURE (IN. WG)									
	0.2		0.4		0.6		0.8		1.0	
	RPM	BHP	RPM	BHP	RPM	BHP	RPM	BHP	RPM	BHP
1200	671	0.23	790	0.34	892	0.47	982	0.61	1064	0.76
1300	705	0.28	820	0.39	919	0.52	1007	0.67	1088	0.82
1400	740	0.33	851	0.45	947	0.58	1034	0.73	1113	0.89
1500	776	0.38	883	0.51	977	0.65	1061	0.80	1138	0.97
1600	813	0.45	916	0.58	1007	0.73	1089	0.89	1165	1.05
1700	851	0.52	949	0.66	1038	0.81	1118	0.97	1192	1.15
1800	888	0.60	984	0.75	1069	0.90	1148	1.07	1221	1.25
1900	927	0.69	1019	0.84	1102	1.00	1179	1.18	1250	1.36
2000	965	0.78	1054	0.94	1135	1.11	1210	1.29	1280	1.48

Med static – 920–1303, 1.5 HP (motor is new 1.7 HP 3 ph)
High static – 1035–1466, 2.0 max HP (motor is 2.4 HP 3ph)

CFM	AVAILABLE EXTERNAL STATIC PRESSURE (IN. WG)									
	1.2		1.4		1.6		1.8		2.0	
	RPM	BHP	RPM	BHP	RPM	BHP	RPM	BHP	RPM	BHP
1200	1140	0.92	1210	1.10	1276	1.28	1339	1.47	1399	1.68
1300	1162	0.99	1232	1.16	1297	1.35	1360	1.55	1419	1.75
1400	1186	1.06	1254	1.24	1319	1.43	1381	1.63	1439	1.84
1500	1210	1.14	1278	1.33	1342	1.52	1403	1.72	1461	1.93
1600	1236	1.23	1302	1.42	1365	1.62	1425	1.82	**1483**	**2.04**
1700	1262	1.33	1328	1.52	1390	1.72	1449	1.93	**1505**	**2.15**
1800	1289	1.44	1354	1.63	1415	1.84	**1473**	**2.05**	**1529**	**2.27**
1900	1317	1.55	1380	1.75	1441	1.96	**1498**	**2.18**	–	–
2000	1345	1.68	1408	1.88	**1467**	**2.10**	**1524**	**2.32**	–	–

Med static – 920–1303, 1.5 HP (motor is new 1.7 HP 3 ph)
High static – 1035–1466, 2.0 max HP (motor is 2.4 HP 3ph)

Bold Face indicates field–supplied drive

Recommend using field–supplied fan pulley (part no. KR11AD561), motor pulley (part no. KR11HY181) and belt (part no. KR29AF041).

Table 34 – 50TCQA05 **4 TON VERTICAL SUPPLY**

CFM	AVAILABLE EXTERNAL STATIC PRESSURE (IN. WG)									
	0.2		0.4		0.6		0.8		1.0	
	RPM	BHP	RPM	BHP	RPM	BHP	RPM	BHP	RPM	BHP
1200	695	0.25	818	0.37	930	0.51	1032	0.66	1126	0.83
1300	731	0.30	849	0.43	955	0.57	1053	0.72	1145	0.89
1400	769	0.36	880	0.49	982	0.63	1077	0.79	1166	0.97
1500	807	0.42	913	0.56	1011	0.71	1103	0.87	1188	1.05
1600	847	0.49	948	0.63	1042	0.79	1130	0.96	1213	1.14
1700	887	0.57	983	0.72	1073	0.88	1158	1.06	1239	1.24
1800	928	0.66	1020	0.82	1106	0.98	1188	1.16	1266	1.35
1900	969	0.76	1057	0.92	1140	1.09	1219	1.28	1295	1.48
2000	1010	0.87	1095	1.04	1175	1.21	1251	1.41	1325	1.61

Med static – 920–1303, 1.5 HP (motor is new 1.7 HP 3 ph)
High static – 1035–1466, 2.0 max HP (motor is 2.4 HP 3ph)

CFM	AVAILABLE EXTERNAL STATIC PRESSURE (IN. WG)									
	1.2		1.4		1.6		1.8		2.0	
	RPM	BHP	RPM	BHP	RPM	BHP	RPM	BHP	RPM	BHP
1200	1215	1.01	1298	1.21	1378	1.42	1454	1.64	**1526**	**1.87**
1300	1231	1.08	1313	1.28	1390	1.49	1465	1.71	**1536**	**1.94**
1400	1249	1.16	1329	1.36	1405	1.57	**1478**	**1.79**	–	–
1500	1270	1.24	1347	1.45	1421	1.66	**1492**	**1.89**	–	–
1600	1292	1.34	1367	1.54	1440	1.76	**1509**	**1.99**	–	–
1700	1315	1.44	1389	1.65	1459	1.88	**1527**	**2.11**	–	–
1800	1341	1.56	1412	1.77	**1481**	**2.00**	–	–	–	–
1900	1367	1.68	1437	1.90	**1504**	**2.13**	–	–	–	–
2000	1395	1.82	**1463**	**2.04**	**1528**	**2.28**	–	–	–	–

Med static – 920–1303, 1.5 HP (motor is new 1.7 HP 3 ph)
High static – 1035–1466, 2.0 max HP (motor is 2.4 HP 3ph)

Bold Face indicates field–supplied drive

Recommend using field–supplied fan pulley (part no. KR11AD561), motor pulley (part no. KR11HY181) and belt (part no. KR29AF041).

Table 35 – 50TCQA06 **5 TON HORIZONTAL SUPPLY**

CFM	AVAILABLE EXTERNAL STATIC PRESSURE (IN. WG)									
	0.2		0.4		0.6		0.8		1.0	
	RPM	BHP	RPM	BHP	RPM	BHP	RPM	BHP	RPM	BHP
1500	725	0.33	840	0.46	937	0.60	1023	0.75	1101	0.90
1625	765	0.40	876	0.54	970	0.68	1054	0.84	1131	1.00
1750	806	0.48	912	0.63	1004	0.78	1087	0.94	1162	1.11
1875	847	0.57	950	0.72	1039	0.88	1120	1.05	1194	1.23
2000	889	0.66	988	0.83	1075	1.00	1154	1.18	1226	1.36
2125	931	0.78	1027	0.95	1112	1.13	1189	1.31	1260	1.50
2250	974	0.90	1067	1.08	1149	1.27	1224	1.46	1294	1.66
2375	1018	1.03	1107	1.23	1187	1.43	1261	1.63	1329	1.84
2500	1061	1.19	1148	1.39	1226	1.59	1297	1.81	1364	2.02

Med static – 1066–1380, 2.0 HP (motor is 2.4 HP 3 ph)
High static – 1208–1639, 2.9 max HP (motor is 2.9 HP 3 ph)

CFM	AVAILABLE EXTERNAL STATIC PRESSURE (IN. WG)									
	1.2		1.4		1.6		1.8		2.0	
	RPM	BHP	RPM	BHP	RPM	BHP	RPM	BHP	RPM	BHP
1500	1172	1.06	1239	1.23	1302	1.40	1361	1.58	1418	1.77
1625	1201	1.16	1267	1.34	1329	1.52	1388	1.71	1444	1.90
1750	1231	1.28	1296	1.46	1358	1.65	1416	1.84	1472	2.04
1875	1262	1.41	1326	1.60	1387	1.79	1445	1.99	1499	2.20
2000	1294	1.55	1357	1.74	1417	1.95	1474	2.15	1528	2.36
2125	1326	1.70	1388	1.90	1447	2.11	1504	2.33	1557	2.55
2250	1359	1.87	1420	2.08	1479	2.29	1534	2.51	1587	2.74
2375	1393	2.05	1453	2.27	1511	2.49	1566	2.72	1618	2.95
2500	1427	2.24	1487	2.47	1543	2.70	1597	2.94	1649	3.18

Med static – 1066–1380, 2.0 HP (motor is 2.4 HP 3 ph)
High static – 1208–1639, 2.9 max HP (motor is 2.9 HP 3 ph)

Table 36 – 50TCQA06 **5 TON VERTICAL SUPPLY**

CFM	AVAILABLE EXTERNAL STATIC PRESSURE (IN. WG)									
	0.2		0.4		0.6		0.8		1.0	
	RPM	BHP	RPM	BHP	RPM	BHP	RPM	BHP	RPM	BHP
1500	794	0.41	902	0.55	993	0.69	1074	0.85	1147	1.00
1625	840	0.49	945	0.64	1034	0.80	1113	0.96	1185	1.13
1750	888	0.59	988	0.75	1075	0.92	1153	1.09	1223	1.26
1875	936	0.70	1033	0.87	1117	1.05	1193	1.23	1263	1.41
2000	984	0.82	1078	1.00	1160	1.19	1235	1.39	1303	1.58
2125	1033	0.96	1124	1.15	1204	1.35	1277	1.56	1343	1.76
2250	1083	1.11	1170	1.32	1248	1.53	1319	1.74	1385	1.96
2375	1133	1.28	1217	1.50	1293	1.72	1363	1.95	1427	2.17
2500	1183	1.47	1265	1.70	1339	1.93	1406	2.17	1470	2.41

Med static – 1066–1380, 2.0 HP (motor is 2.4 HP 3 ph)
High static – 1208–1639, 2.9 max HP (motor is 2.9 HP 3 ph)

CFM	AVAILABLE EXTERNAL STATIC PRESSURE (IN. WG)									
	1.2		1.4		1.6		1.8		2.0	
	RPM	BHP	RPM	BHP	RPM	BHP	RPM	BHP	RPM	BHP
1500	1214	1.16	1277	1.33	1336	1.50	1392	1.67	1445	1.85
1625	1251	1.30	1313	1.47	1371	1.65	1427	1.83	1479	2.02
1750	1289	1.44	1350	1.63	1407	1.81	1462	2.01	1514	2.20
1875	1327	1.60	1387	1.80	1444	1.99	1498	2.19	1550	2.40
2000	1366	1.78	1426	1.98	1482	2.19	1535	2.40	1586	2.61
2125	1406	1.97	1464	2.18	1520	2.40	1573	2.62	1623	2.84
2250	1446	2.18	1504	2.40	1559	2.62	1611	2.85	1661	3.09
2375	1487	2.40	1544	2.63	1598	2.87	1650	3.11	–	–
2500	1529	2.64	1585	2.89	1638	3.13	–	–	–	–

Med static – 1066–1380, 2.0 HP (motor is 2.4 HP 3 ph)
High static – 1208–1639, 2.9 max HP (motor is 2.9 HP 3 ph)

Table 37 – 50TCQA07 **6 TON HORIZONTAL SUPPLY**

CFM	AVAILABLE EXTERNAL STATIC PRESSURE (IN. WG)									
	0.2		0.4		0.6		0.8		1.0	
	RPM	BHP	RPM	BHP	RPM	BHP	RPM	BHP	RPM	BHP
1800	822	0.51	927	0.66	1018	0.82	1100	0.98	1174	1.15
1950	872	0.62	973	0.79	1061	0.95	1140	1.13	1213	1.31
2100	923	0.75	1019	0.92	1104	1.10	1182	1.29	1253	1.48
2250	974	0.90	1067	1.08	1149	1.27	1224	1.46	1294	1.66
2400	1026	1.06	1115	1.26	1195	1.46	1268	1.66	1336	1.87
2550	1079	1.25	1164	1.46	1241	1.67	1312	1.88	1379	2.10
2700	1132	1.46	1214	1.67	1289	1.90	1358	2.12	1422	2.35
2850	1186	1.69	1264	1.92	1336	2.15	1404	2.39	1467	2.63
3000	1240	1.94	1315	2.18	1385	2.43	1451	2.68	1512	2.93

Std static – 878–1192, 1.5 HP (motor is 1.7 HP 3 ph)
Med static – 1066–1380, 2.9 HP (motor is 2.4 HP 3 ph)
High static – 1208–1639, 2.9 max HP (motor is 2.9 HP 3 ph)

CFM	AVAILABLE EXTERNAL STATIC PRESSURE (IN. WG)									
	1.2		1.4		1.6		1.8		2.0	
	RPM	BHP	RPM	BHP	RPM	BHP	RPM	BHP	RPM	BHP
1800	1244	1.33	1308	1.51	1369	1.70	1427	1.90	1483	2.10
1950	1281	1.49	1345	1.68	1405	1.88	1462	2.09	1517	2.30
2100	1320	1.67	1382	1.87	1441	2.08	1498	2.29	1552	2.51
2250	1359	1.87	1420	2.08	1479	2.29	1534	2.51	1587	2.74
2400	1400	2.09	1460	2.31	1517	2.53	1572	2.76	1624	2.99
2550	1441	2.33	1500	2.55	1557	2.79	1610	3.03	1662	3.27
2700	1483	2.59	1541	2.83	1597	3.07	1650	3.32	–	–
2850	1527	2.87	1583	3.12	1638	3.37	–	–	–	–
3000	1571	3.18	1626	3.44	1680	3.70	–	–	–	–

Std static – 878–1192, 1.5 HP (motor is 1.7 HP 3 ph)
Med static – 1066–1380, 2.9 HP (motor is 2.4 HP 3 ph)
High static – 1208–1639, 2.9 max HP (motor is 2.9 HP 3 ph)

Table 38 – 50TCQA07 **6 TON VERTICAL SUPPLY**

CFM	AVAILABLE EXTERNAL STATIC PRESSURE (IN. WG)									
	0.2		0.4		0.6		0.8		1.0	
	RPM	BHP	RPM	BHP	RPM	BHP	RPM	BHP	RPM	BHP
1800	907	0.63	1006	0.80	1092	0.97	1169	1.14	1239	1.32
1950	965	0.77	1060	0.95	1143	1.13	1218	1.32	1287	1.51
2100	1024	0.93	1115	1.12	1195	1.32	1268	1.52	1335	1.72
2250	1083	1.11	1170	1.32	1248	1.53	1319	1.74	1385	1.96
2400	1143	1.32	1227	1.54	1302	1.76	1371	1.99	1435	2.22
2550	1203	1.55	1284	1.78	1357	2.02	1424	2.26	1487	2.50
2700	1264	1.81	1342	2.06	1412	2.31	1478	2.56	1539	2.82
2850	1326	2.09	1400	2.36	1469	2.62	1532	2.89	1592	3.16
3000	1387	2.41	1459	2.69	1525	2.97	1587	3.25	1646	3.53

Std static – 878–1192, 1.5 HP (motor is 1.7 HP 3 ph)
Med static – 1066–1380, 2.9 HP (motor is 2.4 HP 3 ph)
High static – 1208–1639, 2.9 max HP (motor is 2.9 HP 3 ph)

CFM	AVAILABLE EXTERNAL STATIC PRESSURE (IN. WG)									
	1.2		1.4		1.6		1.8		2.0	
	RPM	BHP	RPM	BHP	RPM	BHP	RPM	BHP	RPM	BHP
1800	1304	1.51	1365	1.69	1422	1.88	1477	2.08	1528	2.28
1950	1350	1.71	1410	1.91	1467	2.11	1520	2.31	1572	2.52
2100	1398	1.93	1457	2.14	1512	2.35	1565	2.57	1616	2.79
2250	1446	2.18	1504	2.40	1559	2.62	1611	2.85	1661	3.09
2400	1496	2.45	1552	2.68	1606	2.92	1658	3.16	–	–
2550	1546	2.75	1601	2.99	1654	3.24	–	–	–	–
2700	1597	3.07	1651	3.33	–	–	–	–	–	–
2850	1648	3.43	–	–	–	–	–	–	–	–
3000	–	–	–	–	–	–	–	–	–	–

Std static – 878–1192, 1.5 HP (motor is 1.7 HP 3 ph)
Med static – 1066–1380, 2.9 HP (motor is 2.4 HP 3 ph)
High static – 1208–1639, 2.9 max HP (motor is 2.9 HP 3 ph)

Table 39 – 50TCQD08 **7.5 TON HORIZONTAL SUPPLY**

CFM	AVAILABLE EXTERNAL STATIC PRESSURE (IN. WG)									
	0.2		0.4		0.6		0.8		1.0	
	RPM	BHP	RPM	BHP	RPM	BHP	RPM	BHP	RPM	BHP
2250	423	0.28	509	0.40	587	0.52	659	0.66	725	0.80
2438	444	0.34	525	0.46	600	0.59	669	0.73	733	0.88
2625	465	0.40	543	0.53	614	0.67	680	0.82	743	0.97
2813	487	0.47	561	0.61	629	0.76	693	0.91	753	1.08
3000	510	0.55	580	0.70	646	0.86	707	1.02	765	1.19
3188	534	0.65	600	0.80	663	0.96	722	1.13	779	1.31
3375	557	0.75	621	0.91	681	1.08	738	1.26	793	1.44
3563	582	0.86	642	1.03	700	1.21	755	1.39	808	1.58
3750	606	0.99	664	1.17	720	1.35	773	1.54	824	1.74

Std static – 460–652, 1.2 BHP
Med static – 591–838, 2.9 HP
High static – 838–1084, 2.9 HP

CFM	AVAILABLE EXTERNAL STATIC PRESSURE (IN. WG)									
	1.2		1.4		1.6		1.8		2.0	
	RPM	BHP	RPM	BHP	RPM	BHP	RPM	BHP	RPM	BHP
2250	788	0.94	847	1.09	903	1.25	957	1.41	1009	1.58
2438	794	1.03	852	1.19	907	1.36	959	1.52	1010	1.70
2625	802	1.13	858	1.30	911	1.47	963	1.64	1012	1.82
2813	811	1.24	865	1.41	917	1.59	967	1.77	1016	1.96
3000	821	1.36	874	1.54	925	1.72	974	1.91	1021	2.11
3188	832	1.49	884	1.68	933	1.87	981	2.06	1028	2.26
3375	845	1.63	895	1.82	943	2.02	990	2.22	1035	2.43
3563	858	1.78	907	1.98	954	2.19	1000	2.40	1044	2.61
3750	873	1.94	920	2.15	966	2.36	1011	2.58	1054	2.80

Std static – 460–652, 1.2 BHP
Med static – 591–838, 2.9 HP
High static – 838–1084, 2.9 HP

Table 40 – 50TCQD08 **7.5 TON VERTICAL SUPPLY**

CFM	AVAILABLE EXTERNAL STATIC PRESSURE (IN. WG)									
	0.2		0.4		0.6		0.8		1.0	
	RPM	BHP	RPM	BHP	RPM	BHP	RPM	BHP	RPM	BHP
2250	447	0.31	528	0.43	597	0.54	658	0.66	713	0.78
2438	470	0.37	548	0.50	615	0.62	675	0.75	729	0.88
2625	494	0.45	569	0.58	634	0.71	692	0.85	745	0.99
2813	518	0.53	590	0.67	653	0.82	710	0.96	763	1.11
3000	543	0.62	612	0.77	673	0.93	729	1.08	780	1.24
3188	568	0.72	635	0.89	694	1.05	749	1.21	799	1.38
3375	593	0.84	658	1.01	716	1.19	769	1.36	818	1.53
3563	619	0.97	681	1.15	737	1.33	789	1.52	837	1.70
3750	645	1.11	705	1.30	760	1.49	810	1.68	857	1.88

Std static – 460–652, 1.2 BHP
Med static – 591–838, 2.9 HP
High static – 838–1084, 2.9 HP

CFM	AVAILABLE EXTERNAL STATIC PRESSURE (IN. WG)									
	1.2		1.4		1.6		1.8		2.0	
	RPM	BHP	RPM	BHP	RPM	BHP	RPM	BHP	RPM	BHP
2250	764	0.89	812	1.02	856	1.14	899	1.26	939	1.39
2438	779	1.00	826	1.13	870	1.26	912	1.40	952	1.53
2625	795	1.12	841	1.26	885	1.40	926	1.54	966	1.68
2813	811	1.25	857	1.40	900	1.55	941	1.69	980	1.84
3000	828	1.39	873	1.55	916	1.70	956	1.86	995	2.02
3188	846	1.54	890	1.71	932	1.87	972	2.04	1010	2.21
3375	864	1.70	907	1.88	949	2.05	988	2.23	1026	2.40
3563	882	1.88	925	2.06	966	2.25	1005	2.43	1042	2.62
3750	902	2.07	944	2.26	984	2.45	1022	2.65	1059	2.84

Std static – 460–652, 1.2 BHP
Med static – 591–838, 2.9 HP
High static – 838–1084, 2.9 HP

Table 41 – 50TCQD09 **8.5 TON HORIZONTAL SUPPLY**

CFM	AVAILABLE EXTERNAL STATIC PRESSURE (IN. WG)									
	0.2		0.4		0.6		0.8		1.0	
	RPM	BHP	RPM	BHP	RPM	BHP	RPM	BHP	RPM	BHP
2550	468	0.39	546	0.52	618	0.66	684	0.80	747	0.96
2763	493	0.47	567	0.61	635	0.76	699	0.91	760	1.07
2975	520	0.57	589	0.72	654	0.87	716	1.03	774	1.20
3188	547	0.68	613	0.83	675	1.00	733	1.17	789	1.34
3400	575	0.80	637	0.96	696	1.14	752	1.31	806	1.50
3613	603	0.94	662	1.11	719	1.29	773	1.48	824	1.67
3825	631	1.09	688	1.27	742	1.46	794	1.66	843	1.86
4038	660	1.26	714	1.45	766	1.65	816	1.85	864	2.06
4250	689	1.45	741	1.65	790	1.86	838	2.07	885	2.29

Std static – 460–652, 1.2 BHP
Med static – 591–838, 2.9 HP
High static – 838–1084, 2.9 HP

CFM	AVAILABLE EXTERNAL STATIC PRESSURE (IN. WG)									
	1.2		1.4		1.6		1.8		2.0	
	RPM	BHP	RPM	BHP	RPM	BHP	RPM	BHP	RPM	BHP
2550	806	1.11	863	1.28	916	1.45	968	1.62	1018	1.80
2763	817	1.24	871	1.41	924	1.59	974	1.77	1022	1.95
2975	829	1.37	882	1.55	932	1.74	981	1.93	1028	2.12
3188	843	1.53	894	1.71	943	1.90	990	2.10	1036	2.30
3400	858	1.69	907	1.88	955	2.09	1001	2.29	1046	2.50
3613	874	1.87	922	2.07	968	2.28	1013	2.49	1057	2.71
3825	891	2.07	938	2.28	983	2.49	1027	2.71	1069	2.94
4038	910	2.28	955	2.50	999	2.72	1041	2.95	1083	3.19
4250	930	2.51	973	2.74	1015	2.97	1057	3.21	1097	3.45

Std static – 460–652, 1.2 BHP
Med static – 591–838, 2.9 HP
High static – 838–1084, 2.9 HP

Table 42 – 50TCQD09 **8.5 VERTICAL SUPPLY**

CFM	AVAILABLE EXTERNAL STATIC PRESSURE (IN. WG)									
	0.2		0.4		0.6		0.8		1.0	
	RPM	BHP	RPM	BHP	RPM	BHP	RPM	BHP	RPM	BHP
2550	495	0.43	570	0.56	634	0.70	693	0.83	746	0.96
2763	524	0.53	595	0.67	657	0.81	714	0.95	766	1.09
2975	552	0.63	620	0.79	681	0.94	736	1.09	787	1.24
3188	582	0.76	647	0.92	705	1.08	759	1.25	808	1.41
3400	611	0.89	674	1.07	730	1.24	782	1.42	831	1.59
3613	641	1.05	701	1.23	756	1.42	806	1.60	854	1.79
3825	672	1.22	729	1.42	782	1.61	831	1.81	877	2.00
4038	702	1.41	758	1.62	809	1.83	857	2.03	901	2.24
4250	733	1.62	787	1.84	836	2.06	883	2.28	926	2.49

Std static – 460–652, 1.2 BHP
Med static – 591–838, 2.9 HP
High static – 838–1084, 2.9 HP

CFM	AVAILABLE EXTERNAL STATIC PRESSURE (IN. WG)									
	1.2		1.4		1.6		1.8		2.0	
	RPM	BHP	RPM	BHP	RPM	BHP	RPM	BHP	RPM	BHP
2550	795	1.09	841	1.23	885	1.36	926	1.50	965	1.64
2763	814	1.24	859	1.38	902	1.53	943	1.68	982	1.82
2975	834	1.40	878	1.55	921	1.71	961	1.86	999	2.02
3188	855	1.57	898	1.74	940	1.90	979	2.07	1017	2.24
3400	876	1.76	919	1.94	960	2.12	998	2.29	1036	2.47
3613	898	1.97	940	2.16	980	2.34	1018	2.53	1055	2.72
3825	921	2.20	962	2.40	1001	2.59	1039	2.79	1075	2.99
4038	944	2.45	984	2.65	1023	2.86	1060	3.07	1096	3.27
4250	968	2.71	1007	2.93	1045	3.15	1081	3.36	1117	3.58

Std static – 460–652, 1.2 BHP
Med static – 591–838, 2.9 HP
High static – 838–1084, 2.9 HP

Table 43 – 50TCQD12 **10 TON HORIZONTAL SUPPLY**

CFM	AVAILABLE EXTERNAL STATIC PRESSURE (IN. WG)									
	0.2		0.4		0.6		0.8		1.0	
	RPM	BHP	RPM	BHP	RPM	BHP	RPM	BHP	RPM	BHP
3000	523	0.58	592	0.73	657	0.88	718	1.05	775	1.22
3250	555	0.71	620	0.87	681	1.04	739	1.21	794	1.39
3500	588	0.86	649	1.03	707	1.21	762	1.39	815	1.58
3750	621	1.03	679	1.21	734	1.40	786	1.59	837	1.79
4000	655	1.23	709	1.42	761	1.61	812	1.82	860	2.03
4250	689	1.45	741	1.65	790	1.86	838	2.07	885	2.29
4500	723	1.69	773	1.90	820	2.12	866	2.35	910	2.57
4750	758	1.96	805	2.19	850	2.42	894	2.65	937	2.89
5000	793	2.26	838	2.50	881	2.74	923	2.98	965	3.23

Std static – 591–839, 2.4 HP
Med static – 733–949, 2.9 HP
High static – 838–1084, 3.7 HP

CFM	AVAILABLE EXTERNAL STATIC PRESSURE (IN. WG)									
	1.2		1.4		1.6		1.8		2.0	
	RPM	BHP	RPM	BHP	RPM	BHP	RPM	BHP	RPM	BHP
3000	830	1.39	883	1.57	934	1.76	982	1.95	1029	2.14
3250	847	1.57	897	1.76	946	1.96	993	2.16	1039	2.36
3500	865	1.77	914	1.97	961	2.18	1007	2.38	1051	2.60
3750	885	1.99	932	2.20	978	2.42	1022	2.64	1065	2.86
4000	907	2.24	952	2.46	996	2.68	1038	2.91	1080	3.14
4250	930	2.51	973	2.74	1015	2.97	1057	3.21	1097	3.45
4500	954	2.81	996	3.05	1037	3.29	1076	3.54	1115	3.79
4750	979	3.13	1019	3.38	1059	3.63	1097	3.89	1135	4.15
5000	1005	3.49	1044	3.74	1082	4.01	1119	4.27	1156	4.55

Std static – 591–839, 2.4 HP
Med static – 733–949, 2.9 HP
High static – 838–1084, 3.7 HP

Table 44 – 50TCQD12 **10 VERTICAL SUPPLY**

CFM	AVAILABLE EXTERNAL STATIC PRESSURE (IN. WG)									
	0.2		0.4		0.6		0.8		1.0	
	RPM	BHP	RPM	BHP	RPM	BHP	RPM	BHP	RPM	BHP
3000	556	0.65	623	0.80	684	0.95	738	1.11	789	1.26
3250	590	0.79	655	0.96	713	1.13	766	1.29	815	1.46
3500	625	0.96	687	1.14	742	1.32	794	1.50	841	1.68
3750	661	1.16	719	1.35	773	1.54	822	1.73	869	1.93
4000	697	1.37	753	1.58	804	1.79	852	1.99	897	2.20
4250	733	1.62	787	1.84	836	2.06	883	2.28	926	2.49
4500	770	1.89	821	2.13	869	2.36	914	2.59	956	2.82
4750	807	2.20	856	2.45	902	2.69	945	2.94	986	3.18
5000	844	2.54	891	2.80	936	3.06	978	3.31	1018	3.57

Std static – 591–839, 2.4 HP
Med static – 733–949, 2.9 HP
High static – 838–1084, 3.7 HP

CFM	AVAILABLE EXTERNAL STATIC PRESSURE (IN. WG)									
	1.2		1.4		1.6		1.8		2.0	
	RPM	BHP	RPM	BHP	RPM	BHP	RPM	BHP	RPM	BHP
3000	836	1.42	881	1.57	923	1.73	963	1.89	1001	2.05
3250	861	1.63	904	1.79	945	1.96	985	2.13	1023	2.30
3500	886	1.86	929	2.04	969	2.22	1008	2.40	1045	2.58
3750	912	2.12	954	2.31	994	2.50	1031	2.70	1068	2.89
4000	940	2.40	980	2.61	1019	2.81	1056	3.02	1092	3.22
4250	968	2.71	1007	2.93	1045	3.15	1081	3.36	1117	3.58
4500	996	3.05	1035	3.28	1072	3.51	1108	3.74	1142	3.97
4750	1026	3.42	1063	3.66	1100	3.91	1135	4.15	1168	4.39
5000	1056	3.82	1093	4.08	1128	4.34	1162	4.59	–	–

Std static – 591–839, 2.4 HP
Med static – 733–949, 2.9 HP
High static – 838–1084, 3.7 HP

Table 45 – 50TCQD14 **12.5 TON HORIZONTAL SUPPLY**

CFM	AVAILABLE EXTERNAL STATIC PRESSURE (IN. WG)									
	0.2		0.4		0.6		0.8		1.0	
	RPM	BHP	RPM	BHP	RPM	BHP	RPM	BHP	RPM	BHP
3750	**381**	**0.53**	**452**	**0.74**	520	0.98	584	1.26	645	1.56
4063	**401**	**0.63**	**468**	**0.86**	531	1.11	592	1.39	651	1.69
4375	**421**	**0.75**	**484**	**0.99**	544	1.25	601	1.53	657	1.85
4688	**441**	**0.89**	**501**	**1.14**	558	1.40	612	1.70	666	2.02
5000	**462**	**1.04**	519	1.30	573	1.58	625	1.88	675	2.21
5313	**483**	**1.21**	537	1.49	589	1.77	638	2.08	686	2.42
5625	**504**	**1.40**	556	1.69	605	1.99	653	2.31	699	2.65
5938	525	1.61	575	1.91	622	2.22	668	2.55	712	2.90
6250	546	1.84	595	2.15	640	2.48	684	2.82	*726*	*3.17*

Std static – 507–676, 2.9 HP
Med static – 634–833, 2.9 HP
High static – 792–971, 208V: 5.0 HP; 230V/460V: 6.1 HP; 575V: 5.9 HP

Bold Face requires standard static drive package with KR11HY153 (1VP34) motor pulley (338–507)
Italics requires high static drive package with KR11HY186 (1VM50) motor pulley (684–864)

CFM	AVAILABLE EXTERNAL STATIC PRESSURE (IN. WG)											
	1.2		1.4		1.6		1.8		1.9		2.0	
	RPM	BHP	RPM	BHP	RPM	BHP	RPM	BHP	RPM	BHP	RPM	BHP
3750	703	1.88	757	2.23	808	2.59	855	2.97	878	3.17	900	3.36
4063	707	2.03	760	2.38	810	2.75	857	3.14	880	3.34	902	3.55
4375	711	2.18	763	2.55	812	2.93	859	3.33	882	3.53	904	3.74
4688	717	2.36	767	2.73	815	3.12	862	3.52	884	3.73	906	3.94
5000	725	2.55	*773*	*2.93*	820	3.32	865	3.73	887	3.95	908	4.16
5313	734	2.77	*780*	*3.15*	825	3.55	869	3.96	890	4.18	912	4.40
5625	*744*	*3.01*	*788*	*3.39*	832	3.79	874	4.22	895	4.44	916	4.66
5938	*755*	*3.27*	798	3.65	840	4.06	881	4.49	901	4.71	921	4.94
6250	*768*	*3.55*	808	3.94	849	4.36	888	4.79	908	5.01	927	5.24

Std static – 507–676, 2.9 HP
Med static – 634–833, 2.9 HP
High static – 792–971, 208V: 5.0 HP; 230V/460V: 6.1 HP; 575V: 5.9 HP

Italics requires high static drive package with KR11HY186 (1VM50) motor pulley (684–864)

Table 46 – 50TCQD14 **12.5 VERTICAL SUPPLY**

CFM	AVAILABLE EXTERNAL STATIC PRESSURE (IN. WG)									
	0.2		0.4		0.6		0.8		1.0	
	RPM	BHP	RPM	BHP	RPM	BHP	RPM	BHP	RPM	BHP
3750	**441**	**0.65**	513	0.88	582	1.15	647	1.45	707	1.78
4063	**466**	**0.78**	533	1.03	598	1.30	660	1.61	718	1.95
4375	**491**	**0.94**	554	1.19	615	1.48	674	1.80	730	2.14
4688	517	1.11	576	1.38	634	1.68	690	2.00	744	2.36
5000	543	1.31	599	1.59	653	1.90	706	2.23	758	2.59
5313	570	1.54	622	1.82	674	2.14	724	2.48	774	2.85
5625	596	1.78	646	2.08	695	2.41	743	2.76	*790*	*3.14*
5938	623	2.06	671	2.37	717	2.71	*763*	*3.07*	808	3.45
6250	650	2.36	695	2.69	*740*	*3.03*	*784*	*3.40*	827	3.80

Std static – 507–676, 2.9 HP
Med static – 634–833, 2.9 HP
High static – 792–971, 208V: 5.0 HP; 230V/460V: 6.1 HP; 575V: 5.9 HP

Bold Face requires standard static drive package with KR11HY153 (1VP34) motor pulley (338–507)
Italics requires high static drive package with KR11HY186 (1VM50) motor pulley (684–864)

CFM	AVAILABLE EXTERNAL STATIC PRESSURE (IN. WG)											
	1.2		1.4		1.6		1.8		1.9		2.0	
	RPM	BHP	RPM	BHP	RPM	BHP	RPM	BHP	RPM	BHP	RPM	BHP
3750	764	2.12	816	2.48	866	2.86	912	3.24	935	3.44	956	3.64
4063	773	2.31	825	2.68	874	3.07	921	3.47	943	3.68	965	3.88
4375	784	2.51	835	2.90	883	3.30	929	3.72	951	3.93	973	4.14
4688	795	2.73	845	3.13	893	3.54	938	3.98	960	4.19	981	4.42
5000	808	2.98	856	3.38	903	3.81	947	4.25	969	4.48	990	4.71
5313	822	3.25	868	3.66	914	4.10	957	4.55	978	4.78	999	5.02
5625	837	3.54	882	3.96	925	4.41	968	4.87	989	5.11	1009	5.35
5938	852	3.86	896	4.30	938	4.75	980	5.22	1000	5.46	1020	5.71
6250	869	4.22	911	4.65	952	5.12	992	5.59	1012	5.84	1032	6.09

Std static – 507–676, 2.9 HP
Med static – 634–833, 2.9 HP
High static – 792–971, 208V: 5.0 HP; 230V/460V: 6.1 HP; 575V: 5.9 HP

Bold Face requires standard static drive package with KR11HY153 (1VP34) motor pulley (338–507)
Italics requires high static drive package with KR11HY186 (1VM50) motor pulley (684–864)
Underline requires high static drive package with KR11HY194 (1VP60) motor pulley (864–1061).

FAN PERFORMANCE (cont.)

Table 47 – PULLEY ADJUSTMENT

UNIT		MOTOR/ DRIVE COMBO	MOTOR PULLEY TURNS OPEN												
			0	0.5	1	1.5	2	2.5	3	3.5	4	4.5	5	5.5	6
04	3 phase	Medium Static	1251	1208	1165	1121	1078	1035	992	949	905	862	819	–	–
		High Static	1466	1423	1380	1337	1294	1251	1207	1164	1121	1078	1035	–	–
05	3 phase	Medium Static	1303	1265	1226	1188	1150	1112	1073	1035	997	958	920	–	–
		High Static	1466	1423	1380	1337	1294	1251	1207	1164	1121	1078	1035	–	–
06	3 phase	Medium Static	1380	1349	1317	1286	1254	1223	1192	1160	1129	1097	1066	–	–
		High Static	1639	1596	1553	1510	1467	1424	1380	1337	1294	1251	1208	–	–
07	3 phase	Standard Static	1192	1161	1129	1098	1066	1035	1004	972	941	909	878	–	–
		Medium Static	1380	1349	1317	1286	1254	1223	1192	1160	1129	1097	1066	–	–
		High Static	1639	1596	1553	1510	1467	1424	1380	1337	1294	1251	1208	–	–
08	3 phase	Standard Static	652	633	614	594	575	556	537	518	498	479	460	–	–
		Medium Static	838	813	789	764	739	715	690	665	640	616	591	–	–
		High Static	1084	1059	1035	1010	986	961	936	912	887	863	838	–	–
09	3 phase	Standard Static	652	633	614	594	575	556	537	518	498	479	460	–	–
		Medium Static	838	813	789	764	739	715	690	665	640	616	591	–	–
		High Static	1084	1059	1035	1010	986	961	936	912	887	863	838	–	–
12	3 phase	Standard Static	652	633	614	594	575	556	537	518	498	479	460	–	–
		Medium Static	838	813	789	764	739	715	690	665	640	616	591	–	–
		High Static	1084	1059	1035	1010	986	961	936	912	887	863	838	–	–
14	3 phase	Standard Static	676	659	642	625	608	592	575	558	541	524	507	*	*
		Medium Static	**	**	833	813	793	773	753	734	714	694	674	654	634
		High Static	**	**	971	953	935	917	899	882	864	846	828	810	792

NOTE: Do not adjust pulley further than 5 turns open.

– Factory settings

* Do not set motor pulley above 5 turns open for A or AX section belts

** Do not set motor pulley below 1 turn open for B or BX section belts

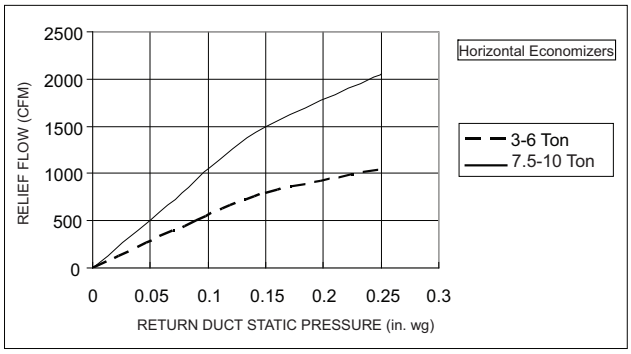

C09879

Fig. 20 - Barometric Relief Flow Capacity

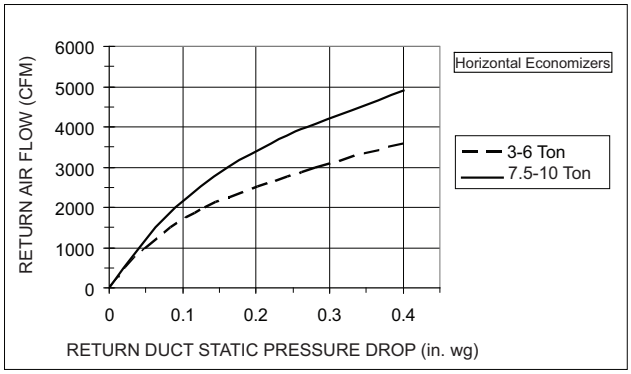

C09881

Fig. 21 - Return Air Pressure Drop

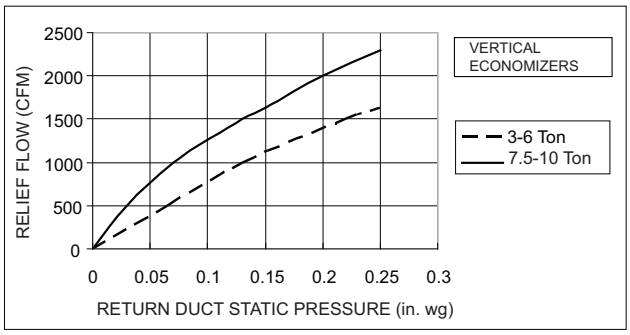

C09883

Fig. 22 - Barometric Relief Flow Capacity

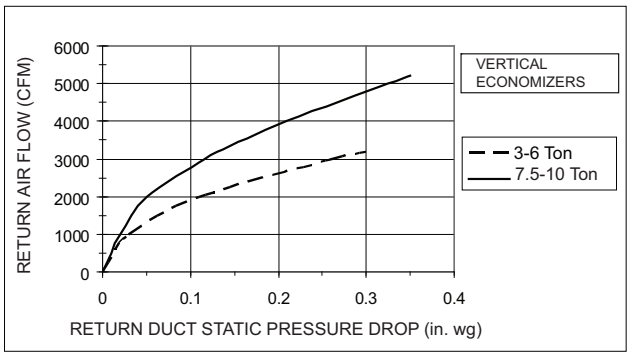

C09885

Fig. 23 - Return Air Pressure Drop

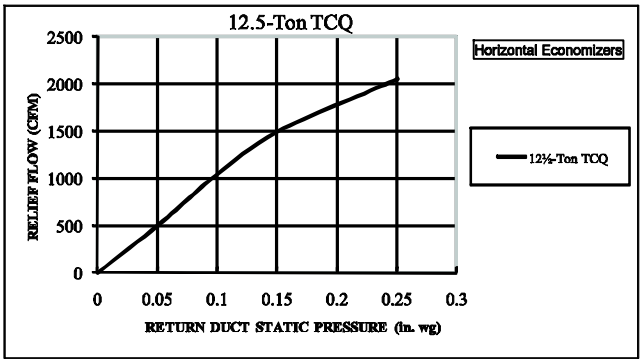

C10258

Fig. 24 - Relief Flow

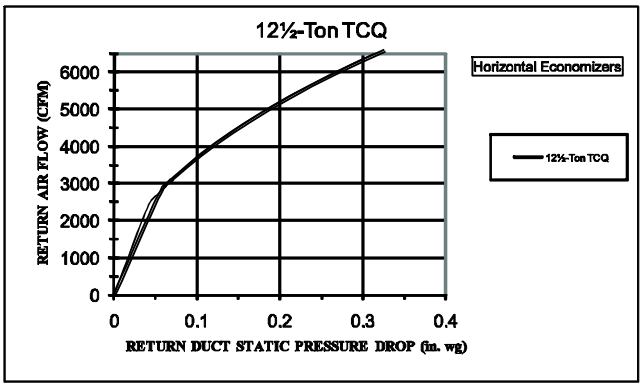

C10260

Fig. 25 - Return Air Flow

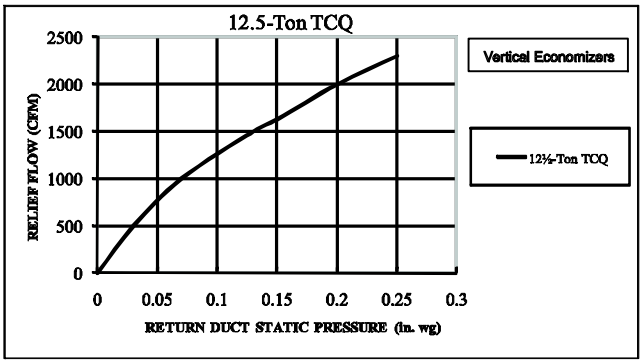

C10262

Fig. 26 - Relief Flow

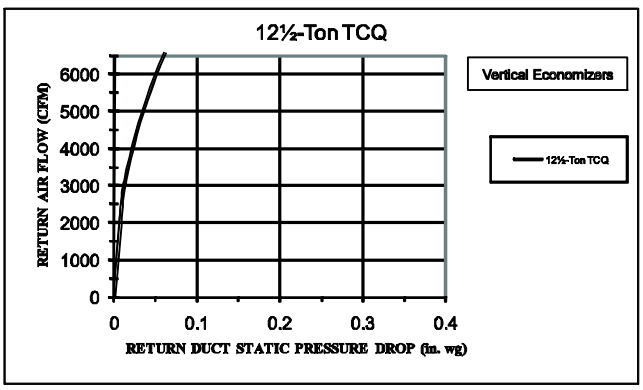

C10264

Fig. 27 - Return Air Flow

Table 48 – 50TCQA04 **1-Stage Cooling** **3 TONS**

V-Ph-Hz	VOLTAGE RANGE		COMP (ea)		OFM (ea)		IFM				
	MIN	MAX	RLA	LRA	WATTS	FLA	TYPE	Max WATTS	Max AMP Draw	EFF at Full Load	FLA
208-1-60	187	253	17.9	112	190	0.9	DD-STD	980	7.8	84%	7.4
230-1-60	187	253	17.9	112	190	0.9	DD-STD	980	7.8	84%	7.4
208-3-60	187	253	13.2	88	190	0.9	DD-STD	980	7.8	84%	7.4
							MED	2000	5.5	80%	5.2
							HIGH	2000	5.5	80%	5.2
230-3-60	187	253	13.2	88	190	0.9	DD-STD	980	7.8	84%	7.4
							MED	2000	5.5	80%	5.2
							HIGH	2000	5.5	80%	5.2
460-3-60	414	506	6.0	44	190	0.5	DD-STD	980	8.0	84%	7.6
							MED	2000	2.7	80%	2.6
							HIGH	2000	2.7	80%	2.6
575-3-60	518	633	NA	NA	190	0.4	DD-STD	980	4.2	84%	4.0
							MED	2000	2.5	80%	2.4
							HIGH	2000	2.1	80%	2.0

Table 49 – 50TCQA05 **1-Stage Cooling** **4 TONS**

V-Ph-Hz	VOLTAGE RANGE		COMP (ea)		OFM (ea)		IFM				
	MIN	MAX	RLA	LRA	WATTS	FLA	TYPE	Max WATTS	Max AMP Draw	EFF at Full Load	FLA
208-1-60	187	253	21.8	117	325	1.5	DD–STD	980	7.8	84%	7.4
230-1-60	187	253	21.8	117	325	1.5	DD–STD	980	7.8	84%	7.4
208-3-60	187	253	13.7	83	325	1.5	DD–STD	980	7.8	84%	7.4
							MED	2000	5.5	80%	5.2
							HIGH	2000	5.5	80%	5.2
230-3-60	187	253	13.7	83	325	1.5	DD–STD	980	7.8	84%	7.4
							MED	2000	5.5	80%	5.2
							HIGH	2000	5.5	80%	5.2
460-3-60	414	506	6.2	41	325	0.8	DD–STD	980	8.0	84%	7.6
							MED	2000	2.7	80%	2.6
							HIGH	2000	2.7	80%	2.6
575-3-60	518	633	4.8	37	325	0.6	DD–STD	980	4.2	84%	4.0
							MED	2000	2.5	80%	2.4
							HIGH	2000	2.1	80%	2.0

Table 50 – 50TCQA06 **1-Stage Cooling** **5 TONS**

V–Ph–Hz	VOLTAGE RANGE		COMP (ea)		OFM (ea)		IFM				
	MIN	MAX	RLA	LRA	WATTS	FLA	TYPE	Max WATTS	Max AMP Draw	EFF at Full Load	FLA
208–1–60	187	253	26.2	134	325	1.5	DD–STD	980	7.8	84%	7.4
230–1–60	187	253	26.2	134	325	1.5	DD–STD	980	7.8	84%	7.4
208–3–60	187	253	15.6	110	325	1.5	DD–STD	980	7.8	84%	7.4
							MED	2000	5.5	80%	5.2
							HIGH	2770	7.9	81%	7.5
230–3–60	187	253	15.6	110	325	1.5	DD–STD	980	7.8	84%	7.4
							MED	2000	5.5	80%	5.2
							HIGH	2770	7.9	81%	7.5
460–3–60	414	506	7.7	52	325	0.8	DD–STD	980	8.0	84%	7.6
							MED	2000	2.7	80%	2.6
							HIGH	2770	3.6	81%	3.4
575–3–60	518	633	5.8	39	325	0.6	DD–STD	980	4.2	84%	4.0
							MED	2000	2.1	80%	2.0
							HIGH	2770	2.9	81%	2.8

Table 51 – 50TCQA07 **1-Stage Cooling** **6 TONS**

V–Ph–Hz	VOLTAGE RANGE		COMP (ea)		OFM (ea)		IFM				
	MIN	MAX	RLA	LRA	WATTS	FLA	TYPE	Max WATTS	Max AMP Draw	EFF at Full Load	FLA
208–3–60	187	253	19.0	123	325	1.5	STD	1600	5.5	80%	5.2
							MED	2770	7.9	81%	7.5
							HIGH	2770	7.9	81%	7.5
230–3–60	187	253	19.0	123	325	1.5	STD	1600	5.5	80%	5.2
							MED	2770	7.9	81%	7.5
							HIGH	2770	7.9	81%	7.5
460–3–60	414	506	9.7	62	325	0.8	STD	1600	2.7	80%	2.6
							MED	2770	3.6	81%	3.4
							HIGH	2770	3.6	81%	3.4
575–3–60	518	633	7.4	50	325	0.6	STD	1600	2.5	80%	2.4
							MED	2770	2.9	81%	2.8
							HIGH	2770	2.9	81%	2.8

50TCQ

Table 52 – 50TCQD08 **2-Stage Cooling** **7.5 TONS**

V–Ph–Hz	VOLTAGE RANGE		COMP (Cir 1)		COMP (Cir 2)		OFM (ea)		IFM				
	MIN	MAX	RLA	LRA	RLA	LRA	WATTS	FLA	TYPE	Max WATTS	Max AMP Draw	EFF at Full Load	FLA
208–3–60	187	253	13.1	83	13.1	83	325	1.5	STD	1310	5.5	80%	5.2
									MED	2770	7.9	81%	7.5
									HIGH	2770	7.9	81%	7.5
230–3–60	187	253	13.1	83	13.1	83	325	1.5	STD	1310	5.5	80%	5.2
									MED	2770	7.9	81%	7.5
									HIGH	2770	7.9	81%	7.5
460–3–60	414	506	6.1	41	6.1	41	325	0.8	STD	1310	2.7	80%	2.6
									MED	2770	3.6	81%	3.4
									HIGH	2770	3.6	81%	3.4
575–3–60	518	633	4.4	33	4.4	33	325	0.6	STD	1310	2.5	80%	2.4
									MED	2770	2.9	81%	2.8
									HIGH	2770	2.9	81%	2.8

Table 53 – 50TCQD09 **2-Stage Cooling** **8.5 TONS**

V–Ph–Hz	VOLTAGE RANGE		COMP (Cir 1)		COMP (Cir 2)		OFM (ea)		IFM				
	MIN	MAX	RLA	LRA	RLA	LRA	WATTS	FLA	TYPE	Max WATTS	Max AMP Draw	EFF at Full Load	FLA
208–3–60	187	253	16.0	91	13.7	83	325	1.5	STD	1310	5.5	80%	5.2
									MED	2770	7.9	80%	7.5
									HIGH	2770	7.9	80%	7.5
230–3–60	187	253	16.0	91	13.7	83	325	1.5	STD	1310	5.5	80%	5.2
									MED	2770	7.9	80%	7.5
									HIGH	2770	7.9	80%	7.5
460–3–60	414	506	7.0	46	6.2	41	325	0.8	STD	1310	2.7	80%	2.6
									MED	2770	3.6	80%	3.4
									HIGH	2770	3.6	80%	3.4
575–3–60	518	633	5.6	37	4.8	37	325	0.6	STD	1310	2.5	80%	2.4
									MED	2770	2.9	80%	2.8
									HIGH	2770	2.9	81%	2.8

Table 54 – 50TCQD12 **2-Stage Cooling** **10 TONS**

V–Ph–Hz	VOLTAGE RANGE		COMP (Cir 1)		COMP (Cir 2)		OFM (ea)		IFM				
	MIN	MAX	RLA	LRA	RLA	LRA	WATTS	FLA	TYPE	Max WATTS	Max AMP Draw	EFF at Full Load	FLA
208–3–60	187	253	15.6	110	15.9	110	800	6.2	STD	1310	5.5	80%	5.2
									MED	2770	10.5	80%	10
									HIGH	2770	15.8	80%	15
230–3–60	187	253	15.6	110	15.9	110	800	6.2	STD	1310	5.5	80%	5.2
									MED	2770	10.5	80%	10
									HIGH	2770	15.8	80%	15
460–3–60	414	506	7.7	52	7.7	52	800	3.1	STD	1310	2.7	80%	2.6
									MED	2770	4.6	80%	4.4
									HIGH	2770	7.8	80%	7.4
575–3–60	518	633	5.8	39	5.7	39	800	2.5	STD	1310	2.1	80%	2
									MED	2770	2.9	80%	2.8
									HIGH	2770	5.9	81%	5.6

Table 55 – 50TCQD14 **2-Stage Cooling** **12.5 TONS**

V–Ph–Hz	VOLTAGE RANGE		COMP (Cir 1)		COMP (Cir 2)		OFM (ea)		IFM				
	MIN	MAX	RLA	LRA	RLA	LRA	WATTS	FLA	TYPE	Max WATTS	Max AMP Draw	EFF at Full Load	FLA
208–3–60	187	253	22.4	149	22.4	149	325	1.5	STD	2770	7.9	80%	7.5
									MED	2770	7.9	80%	7.5
									HIGH	4500	15.8	84%	16.7
230–3–60	187	253	22.4	149	22.4	149	325	1.5	STD	2770	7.9	80%	7.5
									MED	2770	7.9	80%	7.5
									HIGH	5200	15.8	88%	15.2
460–3–60	414	506	10.6	75	10.6	75	325	0.8	STD	2770	3.6	80%	3.4
									MED	2770	3.6	80%	3.4
									HIGH	5200	7.9	88%	7.6
575–3–60	518	633	8.5	54	8.5	54	325	0.7	STD	2770	2.9	80%	2.8
									MED	2770	2.9	80%	2.8
									HIGH	5000	6.0	88%	6.1

Table 56 – MCA/MOCP DETERMINATION WITHOUT C.O. OR UNPWRD C.O.

UNIT	NOM. V–PH–HZ	IFM TYPE	ELEC. HTR		WITHOUT C.O. or UNPWR C.O.							
					WITHOUT P.E.				WITH P.E.			
			Nom (kW)	FLA	MCA	MOCP	DISC. SIZE		MCA	MOCP	DISC. SIZE	
							FLA	LRA			FLA	LRA
50TCQA04	208/230–1–60	DD–STD	–	–	30.7	45	30	121	32.6	50	32	123
			3.3/4.4	15.9/18.3	50.6/53.6	60/60	48/51	137/139	52.5/55.5	60/60	51/53	139/141
			4.9/6.5	23.5/27.1	60.1/64.6	70/70	57/61	145/148	62.0/66.5	70/70	59/63	147/150
			6.5/8.7	31.4/36.3	69.9/76.1	70/80	66/72	152/157	71.8/78.0	80/80	68/74	154/159
			7.9/10.5	37.9/43.8	78.1/85.4	80/90	74/81	159/165	80.0/87.3	80/90	76/83	161/167
			9.8/13.0	46.9/54.2	89.3/98.4	90/100	84/92	215/229	91.2/100.3	100/110	86/95	217/231
	208/230–3–60	DD–STD	–	–	24.8	30	25	97	26.7	30	27	99
			3.3/4.4	9.2/10.6	36.3/38.1	45/45	35/37	106/108	38.2/40.0	45/50	37/39	108/110
			4.9/6.5	13.6/15.6	41.8/44.3	50/50	40/43	111/113	43.7/46.2	50/50	43/45	113/115
			6.5/8.7	18.1/20.9	47.4/50.9	50/60	46/49	115/118	49.3/52.8	50/60	48/51	117/120
			7.9/10.5	21.9/25.3	52.2/56.4	60/60	50/54	119/122	54.1/58.3	60/60	52/56	121/124
			12.0/16.0	33.4/38.5	66.6/72.9	70/80	63/69	130/136	68.5/74.8	70/80	65/71	132/138
		MED	–	–	22.6	30	22	109	24.5	30	24	111
			3.3/4.4	9.2/10.6	34.1/35.9	45/45	33/34	118/120	36.0/37.8	45/45	35/37	120/122
			4.9/6.5	13.6/15.6	39.6/42.1	45/50	38/40	123/125	41.5/44.0	50/50	40/42	125/127
			6.5/8.7	18.1/20.9	45.2/48.7	50/50	43/46	127/130	47.1/50.6	50/60	45/48	129/132
			7.9/10.5	21.9/25.3	50.0/54.2	50/60	47/51	131/134	51.9/56.1	60/60	50/53	133/136
			12.0/16.0	33.4/38.5	64.4/70.7	70/80	61/66	142/148	66.3/72.6	70/80	63/69	144/150
		HIGH	–	–	22.6	30	22	120	24.5	30	24	122
			3.3/4.4	9.2/10.6	34.1/35.9	45/45	33/34	129/131	36.0/37.8	45/45	35/37	131/133
			4.9/6.5	13.6/15.6	39.6/42.1	45/50	38/40	134/136	41.5/44.0	50/50	40/42	136/138
			6.5/8.7	18.1/20.9	45.2/48.7	50/50	43/46	138/141	47.1/50.6	50/60	45/48	140/143
			7.9/10.5	21.9/25.3	50.0/54.2	50/60	47/51	142/145	51.9/56.1	60/60	50/53	144/147
			12.0/16.0	33.4/38.5	64.4/70.7	70/80	61/66	153/159	66.3/72.6	70/80	63/69	155/161
	460–3–60	DD–STD	–	–	16.0	20	16	53	17.0	20	17	54
			6.0	7.2	25.0	30	24	60	26.0	30	26	61
			8.8	10.6	29.3	30	28	64	30.3	35	30	65
			11.5	13.8	33.3	35	32	67	34.3	35	33	68
			14.0	16.8	37.0	40	36	70	38.0	40	37	71
		MED	–	–	10.6	15	10	54	11.6	15	12	55
			6.0	7.2	19.6	20	19	61	20.6	25	20	62
			8.8	10.6	23.9	25	23	65	24.9	25	24	66
			11.5	13.8	27.9	30	26	68	28.9	30	27	69
			14.0	16.8	31.6	35	30	71	32.6	35	31	72
		HIGH	–	–	10.6	15	10	60	11.6	15	12	61
			6.0	7.2	19.6	20	19	67	20.6	25	20	68
			8.8	10.6	23.9	25	23	71	24.9	25	24	72
			11.5	13.8	27.9	30	26	74	28.9	30	27	75
			14.0	16.8	31.6	35	30	77	32.6	35	31	78
	575–3–60	DD–STD	–	–	5.4	15	5	5	7.4	15	7	7
		MED	–	–	3.4	15	3	8	5.4	15	5	10
		HIGH	–	–	2.9	15	3	12	4.9	15	5	14

LEGEND

C.O. – Convenience outlet
DD – Electric Drive X13 Motor
DISC – Disconnect
FLA – Full load amps
IFM – Indoor fan motor
LRA – Locked rotor amps
MCA – Minimum circuit amps
MOCP – Maximum over current protection
P.E. – Power exhaust
UNPWRD C.O. – Unpowered Convenience outlet

NOTES:

1. In compliance with NEC requirements for multimotor and combination load equipment (refer to NEC Articles 430 and 440), the overcurrent protective device for the unit shall be fuse or HACR breaker. Canadian units may be fuse or circuit breaker.
2. **Unbalanced 3-Phase Supply Voltage**
   Never operate a motor where a phase imbalance in supply voltage is greater than 2%. Use the following formula to determine the percentage of voltage imbalance.

$$\text{\% Voltage Imbalance} = 100 \times \frac{\text{max voltage deviation from average voltage}}{\text{average voltage}}$$

Example: Supply voltage is 230-3-60

AB = 224V
BC = 231V
AC = 226V

$$\text{Average Voltage} = \frac{(224 + 231 + 226)}{3} = \frac{681}{3} = 227$$

Determine maximum deviation from average voltage.

(AB) 227 – 224 = 3V Maximum deviation is 4V.
(BC) 231 – 227 = 4V Determine percent of voltage imbalance.

$$\text{\% Voltage Imbalance} = 100 \times \frac{4}{227} = 1.76\%$$

This amount of phase imbalance is satisfactory as it is below the maximum allowable 2%.

IMPORTANT: If the supply voltage phase imbalance is more than 2%, contact your local electric utility company immediately.

50TCQ

Table 57 – (cont.) MCA/MOCP DETERMINATION WITHOUT C.O. OR UNPWRD C.O.

UNIT	NOM. V–PH–HZ	IFM TYPE	ELEC. HTR		WITHOUT C.O. or UNPWR C.O.							
					WITHOUT P.E.				WITH P.E.			
			Nom (kW)	FLA	MCA	MOCP	DISC. SIZE		MCA	MOCP	DISC. SIZE	
							FLA	LRA			FLA	LRA
50TCQA05	208/230–1–60	DD–STD	–	–	36.2	50	35	128	38.1	50	37	130
			3.3/4.4	15.9/18.3	56.0/59.0	60/60	54/56	144/146	57.9/60.9	60/70	56/59	146/148
			6.5/8.7	31.4/36.3	75.4/81.5	80/90	71/77	159/164	77.3/83.4	80/90	74/79	161/166
			9.8/13.0	46.9/54.2	94.8/103.9	100/110	89/98	222/236	96.7/105.8	100/110	91/100	224/238
			13.1/17.4	62.8/72.5	114.7/126.8	125/150	108/119	254/273	116.6/128.7	125/150	110/121	256/275
			15.8/21.0	75.8/87.5	130.9/145.5	150/150	122/136	280/303	132.8/147.4	150/150	125/138	282/305
	208/230–3–60	DD–STD	–	–	26.0	30	26	94	27.9	40	28	96
			4.9/6.5	13.6/15.6	43.0/45.5	50/50	42/44	108/110	44.9/47.4	50/50	44/46	110/112
			6.5/8.7	18.1/20.9	48.7/52.2	50/60	47/50	112/115	50.6/54.1	60/60	49/52	114/117
			12.0/16.0	33.4/38.5	67.8/74.2	70/80	64/70	127/133	69.7/76.1	70/80	67/72	129/135
			15.8/21.0	43.8/50.5	80.8/89.2	90/90	76/84	182/195	82.7/91.1	90/100	79/86	184/197
		MED	–	–	23.8	30	23	106	25.7	30	26	108
			4.9/6.5	13.6/15.6	40.8/43.3	50/50	39/41	120/122	42.7/45.2	50/50	41/44	122/124
			6.5/8.7	18.1/20.9	46.5/50.0	50/50	44/47	124/127	48.4/51.9	50/60	46/50	126/129
			12.0/16.0	33.4/38.5	65.6/72.0	70/80	62/68	139/145	67.5/73.9	70/80	64/70	141/147
			15.8/21.0	43.8/50.5	78.6/87.0	80/90	74/82	194/207	80.5/88.9	90/90	76/84	196/209
		HIGH	–	–	23.8	30	23	117	25.7	30	26	119
			4.9/6.5	13.6/15.6	40.8/43.3	50/50	39/41	131/133	42.7/45.2	50/50	41/44	133/135
			6.5/8.7	18.1/20.9	46.5/50.0	50/50	44/47	135/138	48.4/51.9	50/60	46/50	137/140
			12.0/16.0	33.4/38.5	65.6/72.0	70/80	62/68	150/156	67.5/73.9	70/80	64/70	152/158
			15.8/21.0	43.8/50.5	78.6/87.0	80/90	74/82	205/218	80.5/88.9	90/90	76/84	207/220
	460–3–60	DD–STD	–	–	16.5	20	17	51	17.5	25	18	52
			6.0	7.2	25.5	30	25	58	26.5	30	26	59
			11.5	13.8	33.8	35	33	65	34.8	35	34	66
			14.0	16.8	37.5	40	36	68	38.5	40	37	69
			23.0	27.7	51.1	60	49	106	52.1	60	50	107
		MED	–	–	11.2	15	11	52	12.2	15	12	53
			6.0	7.2	20.2	25	19	59	21.2	25	20	60
			11.5	13.8	28.4	30	27	66	29.4	30	28	67
			14.0	16.8	32.2	35	30	69	33.2	35	32	70
			23.0	27.7	45.8	50	43	107	46.8	50	44	108
		HIGH	–	–	11.2	15	11	58	12.2	15	12	59
			6.0	7.2	20.2	25	19	65	21.2	25	20	66
			11.5	13.8	28.4	30	27	72	29.4	30	28	73
			14.0	16.8	32.2	35	30	75	33.2	35	32	76
			23.0	27.7	45.8	50	43	113	46.8	50	44	114
	575–3–60	DD–STD	–	–	10.6	15	11	43	12.5	15	13	45
		MED	–	–	9.0	15	9	46	10.9	15	11	48
		HIGH	–	–	8.6	15	9	50	10.5	15	11	52

See Notes page 67.

Table 57 – (cont.) MCA/MOCP DETERMINATION WITHOUT C.O. OR UNPWRD C.O.

UNIT	NOM. V–PH–HZ	IFM TYPE	ELEC. HTR		WITHOUT C.O. or UNPWR C.O.							
					WITHOUT P.E.				WITH P.E.			
			Nom (kW)	FLA	MCA	MOCP	DISC. SIZE		MCA	MOCP	DISC. SIZE	
							FLA	LRA			FLA	LRA
50TCQA06	208/230–1–60	DD–STD	–	–	41.7	60	40	145	43.6	60	43	147
			4.9/6.5	23.5/27.1	71.0/75.5	80/80	67/72	169/172	72.9/77.4	80/80	70/74	171/174
			6.5/8.7	31.4/36.3	80.9/87.0	90/100	76/82	176/181	82.8/88.9	100/100	79/84	178/183
			9.8/13.0	46.9/54.2	100.3/109.4	110/110	94/103	239/253	102.2/111.3	110/125	96/105	241/255
			13.1/17.4	62.8/72.5	120.2/132.3	125/150	113/124	271/290	122.1/134.2	125/150	115/126	273/292
			15.8/21.0	75.8/87.5	136.4/151.0	150/175	128/141	297/320	138.3/152.9	150/175	130/143	299/322
	208/230–3–60	DD–STD	–	–	28.4	40	28	121	30.3	45	30	123
			4.9/6.5	13.6/15.6	45.4/47.9	50/50	44/46	135/137	47.3/49.8	50/60	46/48	137/139
			7.9/10.5	21.9/25.3	55.8/60.0	60/70	53/57	143/146	57.7/61.9	60/70	56/59	145/148
			12.0/16.0	33.4/38.5	70.2/76.5	80/80	67/72	154/160	72.1/78.4	80/80	69/75	156/162
			15.8/21.0	43.8/50.5	83.2/91.5	90/100	79/86	209/222	85.1/93.4	90/100	81/88	211/224
			19.9/26.5	55.2/63.8	97.4/108.2	100/110	92/102	231/249	99.3/110.1	100/125	94/104	233/251
		MED	–	–	26.2	40	26	144	28.1	40	28	146
			4.9/6.5	13.6/15.6	43.2/45.7	50/50	41/44	158/160	45.1/47.6	50/50	43/46	160/162
			7.9/10.5	21.9/25.3	53.6/57.8	60/60	51/55	166/169	55.5/59.7	60/60	53/57	168/171
			12.0/16.0	33.4/38.5	68.0/74.3	70/80	64/70	177/183	69.9/76.2	70/80	66/72	179/185
			15.8/21.0	43.8/50.5	81.0/89.3	90/90	76/84	232/245	82.9/91.2	90/100	78/86	234/247
			19.9/26.5	55.2/63.8	95.2/106.0	100/110	89/99	254/272	97.1/107.9	100/110	91/101	256/274
		HIGH	–	–	28.5	40	28	170	30.4	45	30	172
			4.9/6.5	13.6/15.6	45.5/48.0	50/50	44/46	184/186	47.4/49.9	50/60	46/48	186/188
			7.9/10.5	21.9/25.3	55.9/60.1	60/70	53/57	192/195	57.8/62.0	60/70	56/60	194/197
			12.0/16.0	33.4/38.5	70.3/76.6	80/80	67/73	203/209	72.2/78.5	80/80	69/75	205/211
			15.8/21.0	43.8/50.5	83.3/91.6	90/100	79/86	258/271	85.2/93.5	90/100	81/89	260/273
			19.9/26.5	55.2/63.8	97.5/108.3	100/110	92/102	280/298	99.4/110.2	100/125	94/104	282/300
	460–3–60	DD–STD	–	–	18.0	25	19	62	19.0	25	20	63
			6.0	7.2	27.0	30	27	69	28.0	30	28	70
			11.5	13.8	35.3	40	34	76	36.3	40	36	77
			14.0	16.8	39.0	40	38	79	40.0	45	39	80
			23.0	27.7	52.7	60	50	117	53.7	60	52	118
			25.5	30.7	56.4	60	54	123	57.4	60	55	124
		MED	–	–	13.0	20	13	69	14.0	20	14	70
			6.0	7.2	22.0	25	21	76	23.0	25	22	77
			11.5	13.8	30.3	35	29	83	31.3	35	30	84
			14.0	16.8	34.0	35	32	86	35.0	40	33	87
			23.0	27.7	47.7	50	45	124	48.7	50	46	125
			25.5	30.7	51.4	60	48	130	52.4	60	49	131
		HIGH	–	–	13.8	20	14	82	14.8	20	15	83
			6.0	7.2	22.8	25	22	89	23.8	25	23	90
			11.5	13.8	31.1	35	30	96	32.1	35	31	97
			14.0	16.8	34.8	35	33	99	35.8	40	34	100
			23.0	27.7	48.5	50	46	137	49.5	50	47	138
			25.5	30.7	52.2	60	49	143	53.2	60	50	144
	575–3–60	DD–STD	–	–	11.9	15	12	45	13.8	20	14	47
		MED	–	–	9.9	15	10	52	11.8	15	12	54
		HIGH	–	–	10.7	15	11	63	12.6	15	13	65

See Notes page 67.

Table 57 - (cont.) MCA/MOCP DETERMINATION WITHOUT C.O. OR UNPWRD C.O.

UNIT	NOM. V–PH–HZ	IFM TYPE	ELEC. HTR		WITHOUT C.O. or UNPWR C.O.							
					WITHOUT P.E.				WITH P.E.			
			Nom (kW)	FLA	MCA	MOCP	DISC. SIZE		MCA	MOCP	DISC. SIZE	
							FLA	LRA			FLA	LRA
50TCQA07	208/230–3–60	STD	–	–	30.5	45	30	146	32.4	50	32	148
			4.9/6.5	13.6/15.6	47.5/50.0	60/60	45/47	160/162	49.4/51.9	60/60	47/50	162/164
			7.9/10.5	21.9/25.3	57.8/62.1	60/70	55/59	168/171	59.7/64.0	60/70	57/61	170/173
			12.0/16.0	33.4/38.5	72.2/78.6	80/80	68/74	179/185	74.1/80.5	80/90	70/76	181/187
			15.8/21.0	43.8/50.5	85.2/93.6	90/100	80/88	234/247	87.1/95.5	90/100	82/90	236/249
			19.9/26.5	55.2/63.8	99.5/110.2	100/125	93/103	256/274	101.4/112.1	110/125	95/105	258/276
		MED	–	–	32.8	50	32	183	34.7	50	34	185
			4.9/6.5	13.6/15.6	49.8/52.3	60/60	48/50	197/199	51.7/54.2	60/60	50/52	199/201
			7.9/10.5	21.9/25.3	60.1/64.4	70/70	57/61	205/208	62.0/66.3	70/70	60/63	207/210
			12.0/16.0	33.4/38.5	74.5/80.9	80/90	71/76	216/222	76.4/82.8	80/90	73/79	218/224
			15.8/21.0	43.8/50.5	87.5/95.9	90/100	83/90	271/284	89.4/97.8	90/100	85/92	273/286
			19.9/26.5	55.2/63.8	101.8/112.5	110/125	96/106	293/311	103.7/114.4	110/125	98/108	295/313
		HIGH	–	–	32.8	50	32	183	34.7	50	34	185
			4.9/6.5	13.6/15.6	49.8/52.3	60/60	48/50	197/199	51.7/54.2	60/60	50/52	199/201
			7.9/10.5	21.9/25.3	60.1/64.4	70/70	57/61	205/208	62.0/66.3	70/70	60/63	207/210
			12.0/16.0	33.4/38.5	74.5/80.9	80/90	71/76	216/222	76.4/82.8	80/90	73/79	218/224
			15.8/21.0	43.8/50.5	87.5/95.9	90/100	83/90	271/284	89.4/97.8	90/100	85/92	273/286
			19.9/26.5	55.2/63.8	101.8/112.5	110/125	96/106	293/311	103.7/114.4	110/125	98/108	295/313
	460–3–60	STD	–	–	15.5	25	15	73	16.5	25	16	74
			6.0	7.2	24.5	30	23	80	25.5	30	24	81
			11.5	13.8	32.8	35	31	87	33.8	40	32	88
			14.0	16.8	36.5	40	34	90	37.5	40	36	91
			23.0	27.7	50.2	60	47	128	51.2	60	48	129
			25.5	30.7	53.9	60	50	134	54.9	60	52	135
		MED	–	–	16.3	25	16	92	17.3	25	17	93
			6.0	7.2	25.3	30	24	99	26.3	30	25	100
			11.5	13.8	33.6	35	32	106	34.6	40	33	107
			14.0	16.8	37.3	40	35	109	38.3	40	36	110
			23.0	27.7	51.0	60	48	147	52.0	60	49	148
			25.5	30.7	54.7	60	51	153	55.7	60	52	154
		HIGH	–	–	16.3	25	16	92	17.3	25	17	93
			6.0	7.2	25.3	30	24	99	26.3	30	25	100
			11.5	13.8	33.6	35	32	106	34.6	40	33	107
			14.0	16.8	37.3	40	35	109	38.3	40	36	110
			23.0	27.7	51.0	60	48	147	52.0	60	49	148
			25.5	30.7	54.7	60	51	153	55.7	60	52	154
	575–3–60	STD	–	–	12.3	15	12	59	14.2	20	14	61
		MED	–	–	12.7	20	12	74	14.6	20	15	76
		HIGH	–	–	12.7	20	12	74	14.6	20	15	76

See Notes page 67.

Table 57 - (cont.) MCA/MOCP DETERMINATION WITHOUT C.O. OR UNPWRD C.O.

UNIT	NOM. V–PH–HZ	IFM TYPE	ELEC. HTR		WITHOUT C.O. or UNPWR C.O.							
					WITHOUT P.E.				WITH P.E.			
			Nom (kW)	FLA	MCA	MOCP	DISC. SIZE		MCA	MOCP	DISC. SIZE	
							FLA	LRA			FLA	LRA
50TCQD08	208/230–3–60	STD	–	–	37.7	50	40	193	41.5	50	44	197
			7.8/10.4	21.7/25.0	64.8/68.9	70/70	65/68	215/218	68.6/72.7	70/80	69/73	219/222
			12.0/16.0	33.4/38.5	79.4/85.8	80/90	78/84	226/232	83.2/89.6	90/90	82/88	230/236
			18.6/24.8	51.7/59.7	102.3/112.3	110/125	99/108	245/253	106.1/116.1	110/125	103/113	249/257
			24.0/32.0	66.7/77.0	121.1/133.9	125/150	116/128	260/270	124.9/137.7	125/150	121/132	264/274
			31.8/42.4	88.4/102.0	148.2/165.2	150/175	141/157	370/397	152.0/169.0	175/175	146/161	374/401
		MED	–	–	40.0	50	42	230	43.8	50	47	234
			7.8/10.4	21.7/25.0	67.1/71.2	70/80	67/71	252/255	70.9/75.0	80/80	72/75	256/259
			12.0/16.0	33.4/38.5	81.7/88.1	90/90	81/86	263/269	85.5/91.9	90/100	85/91	267/273
			18.6/24.8	51.7/59.7	104.6/114.6	110/125	102/111	282/290	108.4/118.4	110/125	106/115	286/294
			24.0/32.0	66.7/77.0	123.4/136.2	125/150	119/131	297/307	127.2/140.0	150/150	123/135	301/311
			31.8/42.4	88.4/102.0	150.5/167.5	175/175	144/160	407/434	154.3/171.3	175/175	148/164	411/438
		HIGH	–	–	40.0	50	42	230	43.8	50	47	234
			7.8/10.4	21.7/25.0	67.1/71.2	70/80	67/71	252/255	70.9/75.0	80/80	72/75	256/259
			12.0/16.0	33.4/38.5	81.7/88.1	90/90	81/86	263/269	85.5/91.9	90/100	85/91	267/273
			18.6/24.8	51.7/59.7	104.6/114.6	110/125	102/111	282/290	108.4/118.4	110/125	106/115	286/294
			24.0/32.0	66.7/77.0	123.4/136.2	125/150	119/131	297/307	127.2/140.0	150/150	123/135	301/311
			31.8/42.4	88.4/102.0	150.5/167.5	175/175	144/160	407/434	154.3/171.3	175/175	148/164	411/438
	460–3–60	STD	–	–	17.9	20	19	95	19.7	25	21	97
			13.9	16.7	38.8	40	38	112	40.6	45	40	114
			16.5	19.8	42.7	45	42	115	44.5	45	44	117
			27.8	33.4	59.7	60	57	128	61.5	70	59	130
			33.0	39.7	67.6	70	65	135	69.4	70	67	137
			41.7	50.2	80.7	90	77	195	82.5	90	79	197
		MED	–	–	18.7	25	20	114	20.5	25	22	116
			13.9	16.7	39.6	40	39	131	41.4	45	41	133
			16.5	19.8	43.5	45	43	134	45.3	50	45	136
			27.8	33.4	60.5	70	58	147	62.3	70	60	149
			33.0	39.7	68.4	70	65	154	70.2	80	68	156
			41.7	50.2	81.5	90	78	214	83.3	90	80	216
		HIGH	–	–	18.7	25	20	114	20.5	25	22	116
			13.9	16.7	39.6	40	39	131	41.4	45	41	133
			16.5	19.8	43.5	45	43	134	45.3	50	45	136
			27.8	33.4	60.5	70	58	147	62.3	70	60	149
			33.0	39.7	68.4	70	65	154	70.2	80	68	156
			41.7	50.2	81.5	90	78	214	83.3	90	80	216
	575–3–60	STD	–	–	13.5	15	14	77	17.3	20	19	81
			17.0	20.4	39.0	40	38	97	42.8	45	42	101
			34.0	40.9	64.6	70	61	118	68.4	70	66	122
		MED	–	–	13.9	20	15	92	17.7	20	19	96
			17.0	20.4	39.4	40	38	112	43.2	45	43	116
			34.0	40.9	65.0	70	62	133	68.8	70	66	137
		HIGH	–	–	13.9	20	15	92	17.7	20	19	96
			17.0	20.4	39.4	40	38	112	43.2	45	43	116
			34.0	40.9	65.0	70	62	133	68.8	70	66	137

See Notes page 67.

Table 57 - (cont.) MCA/MOCP DETERMINATION WITHOUT C.O. OR UNPWRD C.O.

UNIT	NOM. V–PH–HZ	IFM TYPE	ELEC. HTR		WITHOUT C.O. or UNPWR C.O.							
					WITHOUT P.E.				WITH P.E.			
			Nom (kW)	FLA	MCA	MOCP	DISC. SIZE		MCA	MOCP	DISC. SIZE	
							FLA	LRA			FLA	LRA
50TCQD09	208/230–3–60	STD	–	–	41.9	50	44	201	45.7	60	48	205
			7.8/10.4	21.7/25.0	69.0/73.2	70/80	69/72	223/226	72.8/77.0	80/80	73/77	227/230
			12.0/16.0	33.4/38.5	83.7/90.0	90/100	82/88	234/240	87.5/93.8	90/100	86/92	238/244
			18.6/24.8	51.7/59.7	106.5/116.5	110/125	103/112	253/261	110.3/120.3	125/125	107/117	257/265
			24.0/32.0	66.7/77.0	125.3/138.2	150/150	120/132	268/278	129.1/142.0	150/150	125/137	272/282
			31.8/42.4	88.4/102.0	152.4/169.4	175/175	145/161	378/405	156.2/173.2	175/175	150/165	382/409
		MED	–	–	44.2	60	46	238	48.0	60	51	242
			7.8/10.4	21.7/25.0	71.3/75.5	80/80	71/75	260/263	75.1/79.3	80/80	76/79	264/267
			12.0/16.0	33.4/38.5	86.0/92.3	90/100	85/91	271/277	89.8/96.1	90/100	89/95	275/281
			18.6/24.8	51.7/59.7	108.8/118.8	110/125	106/115	290/298	112.6/122.6	125/125	110/119	294/302
			24.0/32.0	66.7/77.0	127.6/140.5	150/150	123/135	305/315	131.4/144.3	150/150	127/139	309/319
			31.8/42.4	88.4/102.0	154.7/171.7	175/175	148/164	415/442	158.5/175.5	175/200	152/168	419/446
		HIGH	–	–	44.2	60	46	238	48.0	60	51	242
			7.8/10.4	21.7/25.0	71.3/75.5	80/80	71/75	260/263	75.1/79.3	80/80	76/79	264/267
			12.0/16.0	33.4/38.5	86.0/92.3	90/100	85/91	271/277	89.8/96.1	90/100	89/95	275/281
			18.6/24.8	51.7/59.7	108.8/118.8	110/125	106/115	290/298	112.6/122.6	125/125	110/119	294/302
			24.0/32.0	66.7/77.0	127.6/140.5	150/150	123/135	305/315	131.4/144.3	150/150	127/139	309/319
			31.8/42.4	88.4/102.0	154.7/171.7	175/175	148/164	415/442	158.5/175.5	175/200	152/168	419/446
	460–3–60	STD	–	–	19.2	25	20	100	21.0	25	22	102
			13.9	16.7	40.0	45	39	117	41.8	45	41	119
			16.5	19.8	43.9	45	43	120	45.7	50	45	122
			27.8	33.4	60.9	70	58	133	62.7	70	60	135
			33.0	39.7	68.8	70	66	140	70.6	80	68	142
			41.7	50.2	81.9	90	78	200	83.7	90	80	202
		MED	–	–	20.0	25	21	119	21.8	25	23	121
			13.9	16.7	40.8	45	40	136	42.6	45	42	138
			16.5	19.8	44.7	45	44	139	46.5	50	46	141
			27.8	33.4	61.7	70	59	152	63.5	70	61	154
			33.0	39.7	69.6	70	67	159	71.4	80	69	161
			41.7	50.2	82.7	90	79	219	84.5	90	81	221
		HIGH	–	–	20.0	25	21	119	21.8	25	23	121
			13.9	16.7	40.8	45	40	136	42.6	45	42	138
			16.5	19.8	44.7	45	44	139	46.5	50	46	141
			27.8	33.4	61.7	70	59	152	63.5	70	61	154
			33.0	39.7	69.6	70	67	159	71.4	80	69	161
			41.7	50.2	82.7	90	79	219	84.5	90	81	221
	575–3–60	STD	–	–	15.4	20	16	85	19.2	25	20	89
			17.0	20.4	40.9	45	40	105	44.7	45	44	109
			34.0	40.9	66.5	70	63	126	70.3	80	68	130
		MED	–	–	15.8	20	17	100	19.6	25	21	104
			17.0	20.4	41.3	45	40	120	45.1	50	44	124
			34.0	40.9	66.9	70	64	141	70.7	80	68	145
		HIGH	–	–	15.8	20	17	100	19.6	25	21	104
			17.0	20.4	41.3	45	40	120	45.1	50	44	124
			34.0	40.9	66.9	70	64	141	70.7	80	68	145

See Notes page 67.

Table 57 - (cont.) MCA/MOCP DETERMINATION WITHOUT C.O. OR UNPWRD C.O.

UNIT	NOM. V–PH–HZ	IFM TYPE	ELEC. HTR		WITHOUT C.O. or UNPWR C.O.							
					WITHOUT P.E.				WITH P.E.			
			Nom (kW)	FLA	MCA	MOCP	DISC. SIZE		MCA	MOCP	DISC. SIZE	
							FLA	LRA			FLA	LRA
50TCQD12	208/230–3–60	STD	–	–	46.9	60	49	282	50.7	60	54	286
			7.8/10.4	21.7/25.0	74.0/78.1	80/80	74/78	304/307	77.8/81.9	80/90	79/82	308/311
			12.0/16.0	33.4/38.5	88.6/95.0	90/100	88/94	315/321	92.4/98.8	100/100	92/98	319/325
			24.0/32.0	66.7/77.0	130.3/143.1	150/150	126/138	349/359	134.1/146.9	150/150	130/142	353/363
			31.8/42.4	88.4/102.0	157.4/174.4	175/175	151/167	459/486	161.2/178.2	175/200	155/171	463/490
			37.6/50.0	104.2/120.3	177.1/167.2	200/175	169/188	490/523	180.9/171.0	200/175	174/192	494/527
		MED	–	–	51.7	60	55	325	55.5	60	59	329
			7.8/10.4	21.7/25.0	78.8/82.9	80/90	80/84	347/350	82.6/86.7	90/90	84/88	351/354
			12.0/16.0	33.4/38.5	93.4/99.8	100/100	93/99	358/364	97.2/103.6	100/110	98/104	362/368
			24.0/32.0	66.7/77.0	135.1/147.9	150/150	132/143	392/402	138.9/151.7	150/175	136/148	396/406
			31.8/42.4	88.4/102.0	162.2/179.2	175/200	157/172	502/529	166.0/183.0	175/200	161/177	506/533
			37.6/50.0	104.2/120.3	181.9/172.0	200/200	175/193	533/566	185.7/175.8	200/200	179/198	537/570
		HIGH	–	–	56.7	70	61	334	60.5	70	65	338
			7.8/10.4	21.7/25.0	83.8/87.9	90/90	86/89	356/359	87.6/91.7	90/100	90/94	360/363
			12.0/16.0	33.4/38.5	98.4/104.8	100/110	99/105	367/373	102.2/108.6	110/110	103/109	371/377
			24.0/32.0	66.7/77.0	140.1/152.9	150/175	137/149	401/411	143.9/156.7	150/175	142/154	405/415
			31.8/42.4	88.4/102.0	167.2/184.2	175/200	162/178	511/538	171.0/188.0	175/200	167/182	515/542
			37.6/50.0	104.2/120.3	186.9/177.0	200/200	180/199	542/575	190.7/180.8	200/200	185/203	546/579
	460–3–60	STD	–	–	23.0	30	24	135	24.8	30	26	137
			13.9	16.7	43.9	45	43	152	45.7	50	46	154
			16.5	19.8	47.8	50	47	155	49.6	50	49	157
			33.0	39.7	72.7	80	70	175	74.5	80	72	177
			41.7	50.2	85.8	90	82	235	87.6	90	84	237
			50.0	60.1	83.1	90	93	255	84.9	90	95	257
		MED	–	–	24.8	30	26	157	26.6	30	28	159
			13.9	16.7	45.7	50	46	174	47.5	50	48	176
			16.5	19.8	49.6	50	49	177	51.4	60	51	179
			33.0	39.7	74.5	80	72	197	76.3	80	74	199
			41.7	50.2	87.6	90	84	257	89.4	90	86	259
			50.0	60.1	84.9	90	95	277	86.7	90	98	279
		HIGH	–	–	27.8	30	30	161	29.6	35	32	163
			13.9	16.7	48.7	50	49	178	50.5	60	51	180
			16.5	19.8	52.6	60	53	181	54.4	60	55	183
			33.0	39.7	77.5	80	75	201	79.3	80	78	203
			41.7	50.2	90.6	100	88	261	92.4	100	90	263
			50.0	60.1	87.9	90	99	281	89.7	100	101	283
	575–3–60	STD	–	–	17.5	20	18	105	21.3	25	23	109
			17.0	20.4	43.0	45	42	125	46.8	50	46	129
			34.0	40.9	68.6	70	65	146	72.4	80	70	150
			51.0	61.3	78.8	90	89	228	82.6	90	93	232
		MED	–	–	18.3	20	19	116	22.1	25	24	120
			17.0	20.4	43.8	45	43	136	47.6	50	47	140
			34.0	40.9	69.4	70	66	157	73.2	80	71	161
			51.0	61.3	79.6	90	90	239	83.4	90	94	243
		HIGH	–	–	21.1	25	23	130	24.9	30	27	134
			17.0	20.4	46.6	50	46	150	50.4	60	50	154
			34.0	40.9	72.2	80	70	171	76.0	80	74	175
			51.0	61.3	82.4	90	93	253	86.2	90	97	257

See Notes page 67.

Table 57 - (cont.) MCA/MOCP DETERMINATION WITHOUT C.O. OR UNPWRD C.O.

UNIT	NOM. V–Ph–Hz	IFM TYPE	ELEC. HTR		NO C.O. or UNPWR C.O.							
					NO P.E.				w/ P.E. (pwrd fr/unit)			
			Nom (kW)	FLA	MCA	MOCP	DISC. SIZE		MCA	MOCP	DISC. SIZE	
							FLA	LRA			FLA	LRA
50TCQD14	208/230–3–60	STD	–	–	62.4	80.0	65.0	366.0	66.2	80.0	70.0	370.0
			12.4/16.5	34.4/39.7	105.4/112.0	110/125	105/111	400/406	109.2/115.8	110/125	109/115	404/410
			19.9/26.5	55.3/63.8	131.5/142.2	150/150	129/139	477/494	135.3/146.0	150/150	133/143	481/498
			25.2/33.5	69.9/80.6	149.8/163.2	150/175	146/158	436/447	153.6/167.0	175/175	150/162	440/451
			32.7/43.5	90.7/104.7	175.8/193.3	200/200	170/186	547/575	179.6/197.1	200/200	174/190	551/579
			37.6/50.0	104.3/120.3	192.8/182.7	200/200	185/204	575/607	196.6/186.5	200/200	190/208	579/611
		MED	–	–	62.4	80.0	65.0	366.0	66.2	80.0	70.0	370.0
			12.4/16.5	34.4/39.7	105.4/112.0	110/125	105/111	400/406	109.2/115.8	110/125	109/115	404/410
			19.9/26.5	55.3/63.8	131.5/142.2	150/150	129/139	477/494	135.3/146.0	150/150	133/143	481/498
			25.2/33.5	69.9/80.6	149.8/163.2	150/175	146/158	436/447	153.6/167.0	175/175	150/162	440/451
			32.7/43.5	90.7/104.7	175.8/193.3	200/200	170/186	547/575	179.6/197.1	200/200	174/190	551/579
			37.6/50.0	104.3/120.3	192.8/182.7	200/200	185/204	575/607	196.6/186.5	200/200	190/208	579/611
		HIGH	–	–	71.6/70.1	80/80	76/74	394.0	75.4/73.9	90/80	80/79	398.0
			12.4/16.5	34.4/39.7	114.6/119.7	125/125	115/120	428/434	118.4/123.5	125/125	120/124	432/438
			19.9/26.5	55.3/63.8	140.7/149.9	150/150	139/148	505/522	144.5/153.7	150/175	144/152	509/526
			25.2/33.5	69.9/80.6	159.0/170.9	175/175	156/167	464/475	162.8/174.7	175/175	161/171	468/479
			32.7/43.5	90.7/104.7	185.0/201.0	200/225	180/195	575/603	188.8/204.8	200/225	185/199	579/607
			37.6/50.0	104.3/120.3	202.0/190.4	225/200	196/213	603/635	205.8/194.2	225/200	200/217	607/639
	460–3–60	STD	–	–	29.7	40.0	31.0	184.0	31.5	40.0	33.0	186.0
			16.5	19.9	54.5	60	54	204	56.3	60	56	206
			26.5	31.9	69.5	70	68	248	71.3	80	70	250
			33.5	40.3	80.0	90	77	224	81.8	90	79	226
			43.5	52.3	95.0	100	91	289	96.8	100	93	291
			50.0	60.2	89.9	100	100	304	91.7	100	102	306
		MED	–	–	29.7	40.0	31.0	184.0	31.5	40.0	33.0	186.0
			16.5	19.9	54.5	60	54	204	56.3	60	56	206
			26.5	31.9	69.5	70	68	248	71.3	80	70	250
			33.5	40.3	80.0	90	77	224	81.8	90	79	226
			43.5	52.3	95.0	100	91	289	96.8	100	93	291
			50.0	60.2	89.9	100	100	304	91.7	100	102	306
		HIGH	–	–	33.9	40.0	36.0	198.0	35.7	45.0	38.0	200.0
			16.5	19.9	58.7	60	59	218	60.5	70	61	220
			26.5	31.9	73.7	80	73	262	75.5	80	75	264
			33.5	40.3	84.2	90	82	238	86.0	90	84	240
			43.5	52.3	99.2	100	96	303	101.0	110	98	305
			50.0	60.2	94.1	100	105	318	95.9	100	107	320
	575–3–60	STD	–	–	24.0	30.0	25.0	136.0	27.8	30.0	30.0	140.0
			16.5	15.9	43.9	45	43	152	47.7	50	48	156
			26.5	25.5	55.9	60	55	187	59.7	60	59	191
			33.5	32.2	64.3	70	62	168	68.1	70	67	172
			43.5	41.8	76.3	80	73	220	80.1	90	78	224
			50.0	48.1	72.1	80	81	232	75.9	80	85	236
		MED	–	–	24.0	30.0	25.0	136.0	27.8	30.0	30.0	140.0
			16.5	15.9	43.9	45	43	152	47.7	50	48	156
			26.5	25.5	55.9	60	55	187	59.7	60	59	191
			33.5	32.2	64.3	70	62	168	68.1	70	67	172
			43.5	41.8	76.3	80	73	220	80.1	90	78	224
			50.0	48.1	72.1	80	81	232	75.9	80	85	236
		HIGH	–	–	27.3	30.0	29.0	139.0	31.1	35.0	33.0	143.0
			16.5	15.9	47.2	50	47	155	51.0	60	52	159
			26.5	25.5	59.2	60	58	190	63.0	70	63	194
			33.5	32.2	67.6	70	66	171	71.4	80	70	175
			43.5	41.8	79.6	80	77	223	83.4	90	81	227
			50.0	48.1	75.4	80	84	235	79.2	90	89	239

See Notes page 67.

Table 57 – MCA/MOCP DETERMINATION WITH PWRD C.O.

UNIT	NOM. V–PH–HZ	IFM TYPE	ELEC. HTR		WITH PWRD C.O.							
					WITHOUT P.E.				WITH P.E.			
			Nom (kW)	FLA	MCA	MOCP	DISC. SIZE		MCA	MOCP	DISC. SIZE	
							FLA	LRA			FLA	LRA
50TCQA04	208/230–1–60	DD–STD	–	–	35.5	50	36	126	37.4	50	38	128
			3.3/4.4	15.9/18.3	55.4/58.4	60/60	54/57	142/144	57.3/60.3	60/70	56/59	144/146
			4.9/6.5	23.5/27.1	64.9/69.4	70/80	63/67	150/153	66.8/71.3	70/80	65/69	152/155
			6.5/8.7	31.4/36.3	74.7/80.9	80/90	72/77	157/162	76.6/82.8	80/90	74/80	159/164
			7.9/10.5	37.9/43.8	82.9/90.2	90/100	79/86	164/170	84.8/92.1	90/100	81/88	166/172
			9.8/13.0	46.9/54.2	94.1/103.2	100/110	90/98	220/234	96.0/105.1	100/110	92/100	222/236
	208/230–3–60	DD–STD	–	–	29.6	40	30	102	31.5	40	32	104
			3.3/4.4	9.2/10.6	41.1/42.9	50/50	41/42	111/113	43.0/44.8	50/50	43/45	113/115
			4.9/6.5	13.6/15.6	46.6/49.1	50/50	46/48	116/118	48.5/51.0	50/60	48/50	118/120
			6.5/8.7	18.1/20.9	52.2/55.7	60/60	51/54	120/123	54.1/57.6	60/60	53/56	122/125
			7.9/10.5	21.9/25.3	57.0/61.2	60/70	55/59	124/127	58.9/63.1	60/70	58/62	126/129
			12.0/16.0	33.4/38.5	71.4/77.7	80/80	69/75	135/141	73.3/79.6	80/80	71/77	137/143
		MED	–	–	27.4	40	28	114	29.3	40	30	116
			3.3/4.4	9.2/10.6	38.9/40.7	45/50	38/40	123/125	40.8/42.6	50/50	40/42	125/127
			4.9/6.5	13.6/15.6	44.4/46.9	50/50	43/46	128/130	46.3/48.8	50/50	46/48	130/132
			6.5/8.7	18.1/20.9	50.0/53.5	60/60	49/52	132/135	51.9/55.4	60/60	51/54	134/137
			7.9/10.5	21.9/25.3	54.8/59.0	60/60	53/57	136/139	56.7/60.9	60/70	55/59	138/141
			12.0/16.0	33.4/38.5	69.2/75.5	70/80	66/72	147/153	71.1/77.4	80/80	68/74	149/155
		HIGH	–	–	27.4	40	28	125	29.3	40	30	127
			3.3/4.4	9.2/10.6	38.9/40.7	45/50	38/40	134/136	40.8/42.6	50/50	40/42	136/138
			4.9/6.5	13.6/15.6	44.4/46.9	50/50	43/46	139/141	46.3/48.8	50/50	46/48	141/143
			6.5/8.7	18.1/20.9	50.0/53.5	60/60	49/52	143/146	51.9/55.4	60/60	51/54	145/148
			7.9/10.5	21.9/25.3	54.8/59.0	60/60	53/57	147/150	56.7/60.9	60/70	55/59	149/152
			12.0/16.0	33.4/38.5	69.2/75.5	70/80	66/72	158/164	71.1/77.4	80/80	68/74	160/166
	460–3–60	DD–STD	–	–	18.2	25	19	55	19.2	25	20	56
			6.0	7.2	27.2	30	27	62	28.2	30	28	63
			8.8	10.6	31.5	35	31	66	32.5	35	32	67
			11.5	13.8	35.5	40	35	69	36.5	40	36	70
			14.0	16.8	39.2	40	38	72	40.2	45	39	73
		MED	–	–	12.8	15	13	56	13.8	20	14	57
			6.0	7.2	21.8	25	21	63	22.8	25	22	64
			8.8	10.6	26.1	30	25	67	27.1	30	26	68
			11.5	13.8	30.1	35	29	70	31.1	35	30	71
			14.0	16.8	33.8	35	32	73	34.8	35	33	74
		HIGH	–	–	12.8	15	13	62	13.8	20	14	63
			6.0	7.2	21.8	25	21	69	22.8	25	22	70
			8.8	10.6	26.1	30	25	73	27.1	30	26	74
			11.5	13.8	30.1	35	29	76	31.1	35	30	77
			14.0	16.8	33.8	35	32	79	34.8	35	33	80
	575–3–60	DD–STD	–	–	7.1	15	7	7	9.5	15	9	9
		MED	–	–	5.1	15	5	10	7.5	15	7	12
		HIGH	–	–	4.6	15	5	14	7.0	15	7	16

See Notes page 67.

Table 58 – (cont.) MCA/MOCP DETERMINATION WITH PWRD C.O.

UNIT	NOM. V–PH–HZ	IFM TYPE	ELEC. HTR		WITH PWRD C.O.							
					WITHOUT P.E.				WITH P.E.			
			Nom (kW)	FLA	MCA	MOCP	DISC. SIZE		MCA	MOCP	DISC. SIZE	
							FLA	LRA			FLA	LRA
50TCQA05	208/230–1–60	DD–STD	–	–	41	60	41	133	42.9	60	43	135
			3.3/4.4	15.9/18.3	60.8/63.8	70/80	59/62	149/151	62.7/65.7	80/80	61/64	151/153
			6.5/8.7	31.4/36.3	80.2/86.3	90/90	77/83	164/169	82.1/88.2	90/100	79/85	166/171
			9.8/13.0	46.9/54.2	99.6/108.7	100/110	95/103	227/241	101.5/110.6	110/125	97/105	229/243
			13.1/17.4	62.8/72.5	119.5/131.6	125/150	113/124	259/278	121.4/133.5	125/150	115/126	261/280
			15.8/21.0	75.8/87.5	135.7/150.3	150/175	128/141	285/308	137.6/152.2	150/175	130/144	287/310
	208/230–3–60	DD–STD	–	–	30.8	40	32	99	32.7	45	34	101
			4.9/6.5	13.6/15.6	47.8/50.3	50/60	47/49	113/115	49.7/52.2	60/60	49/52	115/117
			6.5/8.7	18.1/20.9	53.5/57.0	60/60	52/56	117/120	55.4/58.9	60/60	55/58	119/122
			12.0/16.0	33.4/38.5	72.6/79.0	80/80	70/76	132/138	74.5/80.9	80/90	72/78	134/140
			15.8/21.0	43.8/50.5	85.6/94.0	90/100	82/90	187/200	87.5/95.9	90/100	84/92	189/202
		MED	–	–	28.6	40	29	111	30.5	40	31	113
			4.9/6.5	13.6/15.6	45.6/48.1	50/50	45/47	125/127	47.5/50.0	50/60	47/49	127/129
			6.5/8.7	18.1/20.9	51.3/54.8	60/60	50/53	129/132	53.2/56.7	60/60	52/55	131/134
			12.0/16.0	33.4/38.5	70.4/76.8	80/80	67/73	144/150	72.3/78.7	80/80	70/75	146/152
			15.8/21.0	43.8/50.5	83.4/91.8	90/100	79/87	199/212	85.3/93.7	90/100	82/89	201/214
		HIGH	–	–	28.6	40	29	122	30.5	40	31	124
			4.9/6.5	13.6/15.6	45.6/48.1	50/50	45/47	136/138	47.5/50.0	50/60	47/49	138/140
			6.5/8.7	18.1/20.9	51.3/54.8	60/60	50/53	140/143	53.2/56.7	60/60	52/55	142/145
			12.0/16.0	33.4/38.5	70.4/76.8	80/80	67/73	155/161	72.3/78.7	80/80	70/75	157/163
			15.8/21.0	43.8/50.5	83.4/91.8	90/100	79/87	210/223	85.3/93.7	90/100	82/89	212/225
	460–3–60	DD–STD	–	–	18.7	25	19	53	19.7	25	20	54
			6.0	7.2	27.7	30	28	60	28.7	30	29	61
			11.5	13.8	36.0	40	35	67	37.0	40	36	68
			14.0	16.8	39.7	40	39	70	40.7	45	40	71
			23.0	27.7	53.3	60	51	108	54.3	60	52	109
		MED	–	–	13.4	15	14	54	14.4	20	15	55
			6.0	7.2	22.4	25	22	61	23.4	25	23	62
			11.5	13.8	30.6	35	29	68	31.6	35	31	69
			14.0	16.8	34.4	35	33	71	35.4	40	34	72
			23.0	27.7	48.0	50	45	109	49.0	50	47	110
		HIGH	–	–	13.4	15	14	60	14.4	20	15	61
			6.0	7.2	22.4	25	22	67	23.4	25	23	68
			11.5	13.8	30.6	35	29	74	31.6	35	31	75
			14.0	16.8	34.4	35	33	77	35.4	40	34	78
			23.0	27.7	48.0	50	45	115	49.0	50	47	116
	575–3–60	DD–STD	–	–	12.3	15	13	45	14.2	20	15	47
		MED	–	–	10.7	15	11	48	12.6	15	13	50
		HIGH	–	–	10.3	15	10	52	12.2	15	13	54

See Notes page 67.

Table 58 – (cont.) MCA/MOCP DETERMINATION WITH PWRD C.O.

UNIT	NOM. V–PH–HZ	IFM TYPE	ELEC. HTR		WITH PWRD C.O.							
					WITHOUT P.E.				WITH P.E.			
			Nom (kW)	FLA	MCA	MOCP	DISC. SIZE		MCA	MOCP	DISC. SIZE	
							FLA	LRA			FLA	LRA
50TCQA06	208/230–1–60	DD–STD	–	–	46.5	60	46	150	48.4	60	48	152
			4.9/6.5	23.5/27.1	75.8/80.3	80/90	73/77	174/177	77.7/82.2	80/100	75/79	176/179
			6.5/8.7	31.4/36.3	85.7/91.8	100/100	82/88	181/186	87.6/93.7	100/100	84/90	183/188
			9.8/13.0	46.9/54.2	105.1/114.2	110/125	100/108	244/258	107.0/116.1	110/125	102/110	246/260
			13.1/17.4	62.8/72.5	125.0/137.1	125/150	118/129	276/295	126.9/139.0	150/150	120/131	278/297
			15.8/21.0	75.8/87.5	141.2/155.8	150/175	133/147	302/325	143.1/157.7	150/175	135/149	304/327
	208/230–3–60	DD–STD	–	–	33.2	45	34	126	35.1	50	36	128
			4.9/6.5	13.6/15.6	50.2/52.7	60/60	49/52	140/142	52.1/54.6	60/60	52/54	142/144
			7.9/10.5	21.9/25.3	60.6/64.8	70/70	59/63	148/151	62.5/66.7	70/70	61/65	150/153
			12.0/16.0	33.4/38.5	75.0/81.3	80/90	72/78	159/165	76.9/83.2	80/90	74/80	161/167
			15.8/21.0	43.8/50.5	88.0/96.3	90/100	84/92	214/227	89.9/98.2	90/100	86/94	216/229
			19.9/26.5	55.2/63.8	102.2/113.0	110/125	97/107	236/254	104.1/114.9	110/125	99/109	238/256
		MED	–	–	31	45	31	149	32.9	45	33	151
			4.9/6.5	13.6/15.6	48.0/50.5	60/60	47/49	163/165	49.9/52.4	60/60	49/51	165/167
			7.9/10.5	21.9/25.3	58.4/62.6	60/70	56/60	171/174	60.3/64.5	70/70	59/62	173/176
			12.0/16.0	33.4/38.5	72.8/79.1	80/80	70/75	182/188	74.7/81.0	80/90	72/78	184/190
			15.8/21.0	43.8/50.5	85.8/94.1	90/100	82/89	237/250	87.7/96.0	90/100	84/91	239/252
			19.9/26.5	55.2/63.8	100.0/110.8	100/125	95/105	259/277	101.9/112.7	110/125	97/107	261/279
		HIGH	–	–	33.3	45	34	175	35.2	50	36	177
			4.9/6.5	13.6/15.6	50.3/52.8	60/60	49/52	189/191	52.2/54.7	60/60	52/54	191/193
			7.9/10.5	21.9/25.3	60.7/64.9	70/70	59/63	197/200	62.6/66.8	70/70	61/65	199/202
			12.0/16.0	33.4/38.5	75.1/81.4	80/90	72/78	208/214	77.0/83.3	80/90	74/80	210/216
			15.8/21.0	43.8/50.5	88.1/96.4	90/100	84/92	263/276	90.0/98.3	90/100	86/94	265/278
			19.9/26.5	55.2/63.8	102.3/113.1	110/125	97/107	285/303	104.2/115.0	110/125	99/109	287/305
	460–3–60	DD–STD	–	–	20.2	25	21	64	21.2	25	22	65
			6.0	7.2	29.2	30	29	71	30.2	35	30	72
			11.5	13.8	37.5	40	37	78	38.5	40	38	79
			14.0	16.8	41.2	45	40	81	42.2	45	42	82
			23.0	27.7	54.9	60	53	119	55.9	60	54	120
			25.5	30.7	58.6	60	56	125	59.6	60	58	126
		MED	–	–	15.2	20	15	71	16.2	20	16	72
			6.0	7.2	24.2	30	24	78	25.2	30	25	79
			11.5	13.8	32.5	35	31	85	33.5	35	32	86
			14.0	16.8	36.2	40	35	88	37.2	40	36	89
			23.0	27.7	49.9	50	47	126	50.9	60	48	127
			25.5	30.7	53.6	60	51	132	54.6	60	52	133
		HIGH	–	–	16	20	16	84	17.0	20	17	85
			6.0	7.2	25.0	30	24	91	26.0	30	26	92
			11.5	13.8	33.3	35	32	98	34.3	35	33	99
			14.0	16.8	37.0	40	36	101	38.0	40	37	102
			23.0	27.7	50.7	60	48	139	51.7	60	49	140
			25.5	30.7	54.4	60	52	145	55.4	60	53	146
	575–3–60	DD–STD	–	–	13.6	15	14	47	15.5	20	16	49
		MED	–	–	11.6	15	12	54	13.5	15	14	56
		HIGH	–	–	12.4	15	13	65	14.3	20	15	67

See Notes page 67.

Table 58 – (cont.) MCA/MOCP DETERMINATION WITH PWRD C.O.

UNIT	NOM. V–PH–HZ	IFM TYPE	ELECTRIC HEATER		WITH PWRD C.O.							
					WITHOUT P.E.				WITH P.E.			
			Nom (kW)	FLA	MCA	MOCP	DISC. SIZE		MCA	MOCP	DISC. SIZE	
							FLA	LRA			FLA	LRA
50TCQA07	208/230–3–60	STD	–	–	35.3	50	35	151	37.2	50	37	153
			4.9/6.5	13.6/15.6	52.3/54.8	60/60	51/53	165/167	54.2/56.7	60/60	53/55	167/169
			7.9/10.5	21.9/25.3	62.6/66.9	70/70	60/64	173/176	64.5/68.8	70/80	62/66	175/178
			12.0/16.0	33.4/38.5	77.0/83.4	80/90	73/79	184/190	78.9/85.3	80/90	76/82	186/192
			15.8/21.0	43.8/50.5	90.0/98.4	90/100	85/93	239/252	91.9/100.3	100/110	88/95	241/254
			19.9/26.5	55.2/63.8	104.3/115.0	110/125	99/108	261/279	106.2/116.9	110/125	101/111	263/281
		MED	–	–	37.6	50	38	188	39.5	50	40	190
			4.9/6.5	13.6/15.6	54.6/57.1	60/60	53/56	202/204	56.5/59.0	60/60	56/58	204/206
			7.9/10.5	21.9/25.3	64.9/69.2	70/80	63/67	210/213	66.8/71.1	80/80	65/69	212/215
			12.0/16.0	33.4/38.5	79.3/85.7	80/90	76/82	221/227	81.2/87.6	90/90	78/84	223/229
			15.8/21.0	43.8/50.5	92.3/100.7	100/110	88/96	276/289	94.2/102.6	100/110	90/98	278/291
			19.9/26.5	55.2/63.8	106.6/117.3	110/125	101/111	298/316	108.5/119.2	110/125	103/113	300/318
		HIGH	–	–	37.6	50	38	188	39.5	50	40	190
			4.9/6.5	13.6/15.6	54.6/57.1	60/60	53/56	202/204	56.5/59.0	60/60	56/58	204/206
			7.9/10.5	21.9/25.3	64.9/69.2	70/80	63/67	210/213	66.8/71.1	80/80	65/69	212/215
			12.0/16.0	33.4/38.5	79.3/85.7	80/90	76/82	221/227	81.2/87.6	90/90	78/84	223/229
			15.8/21.0	43.8/50.5	92.3/100.7	100/110	88/96	276/289	94.2/102.6	100/110	90/98	278/291
			19.9/26.5	55.2/63.8	106.6/117.3	110/125	101/111	298/316	108.5/119.2	110/125	103/113	300/318
	460–3–60	STD	–	–	17.7	25	18	75	18.7	25	19	76
			6.0	7.2	26.7	30	26	82	27.7	30	27	83
			11.5	13.8	35.0	40	33	89	36.0	40	35	90
			14.0	16.8	38.7	40	37	92	39.7	45	38	93
			23.0	27.7	52.4	60	49	130	53.4	60	51	131
			25.5	30.7	56.1	60	53	136	57.1	60	54	137
		MED	–	–	18.5	25	19	94	19.5	25	20	95
			6.0	7.2	27.5	30	27	101	28.5	30	28	102
			11.5	13.8	35.8	40	34	108	36.8	40	36	109
			14.0	16.8	39.5	45	38	111	40.5	45	39	112
			23.0	27.7	53.2	60	50	149	54.2	60	52	150
			25.5	30.7	56.9	60	54	155	57.9	60	55	156
		HIGH	–	–	18.5	25	19	94	19.5	25	20	95
			6.0	7.2	27.5	30	27	101	28.5	30	28	102
			11.5	13.8	35.8	40	34	108	36.8	40	36	109
			14.0	16.8	39.5	45	38	111	40.5	45	39	112
			23.0	27.7	53.2	60	50	149	54.2	60	52	150
			25.5	30.7	56.9	60	54	155	57.9	60	55	156
	575–3–60	STD	–	–	14.0	20	14	61	15.9	20	16	63
		MED	–	–	14.4	20	14	76	16.3	20	17	78
		HIGH	–	–	14.4	20	14	76	16.3	20	17	78

See Notes page 67.

Table 58 – (cont.) MCA/MOCP DETERMINATION WITH PWRD C.O.

UNIT	NOM. V–PH–HZ	IFM TYPE	ELECTRIC HEATER		WITH PWRD C.O.							
					WITHOUT P.E.				WITH P.E.			
			Nom (kW)	FLA	MCA	MOCP	DISC. SIZE		MCA	MOCP	DISC. SIZE	
							FLA	LRA			FLA	LRA
50TCQD08	208/230–3–60	STD	–	–	42.5	50	45	198	46.3	50	49	202
			7.8/10.4	21.7/25.0	69.6/73.7	70/80	70/74	220/223	73.4/77.5	80/80	74/78	224/227
			12.0/16.0	33.4/38.5	84.2/90.6	90/100	83/89	231/237	88.0/94.4	90/100	88/94	235/241
			18.6/24.8	51.7/59.7	107.1/117.1	110/125	105/114	250/258	110.9/120.9	125/125	109/118	254/262
			24.0/32.0	66.7/77.0	125.9/138.7	150/150	122/134	265/275	129.7/142.5	150/150	126/138	269/279
			31.8/42.4	88.4/102.0	153.0/170.0	175/175	147/162	375/402	156.8/173.8	175/175	151/167	379/406
		MED	–	–	44.8	50	48	235	48.6	60	52	239
			7.8/10.4	21.7/25.0	71.9/76.0	80/80	73/76	257/260	75.7/79.8	80/80	77/81	261/264
			12.0/16.0	33.4/38.5	86.5/92.9	90/100	86/92	268/274	90.3/96.7	100/100	91/96	272/278
			18.6/24.8	51.7/59.7	109.4/119.4	110/125	107/116	287/295	113.2/123.2	125/125	112/121	291/299
			24.0/32.0	66.7/77.0	128.2/141.0	150/150	124/136	302/312	132.0/144.8	150/150	129/141	306/316
			31.8/42.4	88.4/102.0	155.3/172.3	175/175	149/165	412/439	159.1/176.1	175/200	154/169	416/443
		HIGH	–	–	44.8	50	48	235	48.6	60	52	239
			7.8/10.4	21.7/25.0	71.9/76.0	80/80	73/76	257/260	75.7/79.8	80/80	77/81	261/264
			12.0/16.0	33.4/38.5	86.5/92.9	90/100	86/92	268/274	90.3/96.7	100/100	91/96	272/278
			18.6/24.8	51.7/59.7	109.4/119.4	110/125	107/116	287/295	113.2/123.2	125/125	112/121	291/299
			24.0/32.0	66.7/77.0	128.2/141.0	150/150	124/136	302/312	132.0/144.8	150/150	129/141	306/316
			31.8/42.4	88.4/102.0	155.3/172.3	175/175	149/165	412/439	159.1/176.1	175/200	154/169	416/443
	460–3–60	STD	–	–	20.1	25	21	97	21.9	25	23	99
			13.9	16.7	41.0	45	41	114	42.8	45	43	116
			16.5	19.8	44.9	45	44	117	46.7	50	46	119
			27.8	33.4	61.9	70	60	130	63.7	70	62	132
			33.0	39.7	69.8	70	67	137	71.6	80	69	139
			41.7	50.2	82.9	90	79	197	84.7	90	81	199
		MED	–	–	20.9	25	22	116	22.7	25	24	118
			13.9	16.7	41.8	45	42	133	43.6	45	44	135
			16.5	19.8	45.7	50	45	136	47.5	50	47	138
			27.8	33.4	62.7	70	61	149	64.5	70	63	151
			33.0	39.7	70.6	80	68	156	72.4	80	70	158
			41.7	50.2	83.7	90	80	216	85.5	90	82	218
		HIGH	–	–	20.9	25	22	116	22.7	25	24	118
			13.9	16.7	41.8	45	42	133	43.6	45	44	135
			16.5	19.8	45.7	50	45	136	47.5	50	47	138
			27.8	33.4	62.7	70	61	149	64.5	70	63	151
			33.0	39.7	70.6	80	68	156	72.4	80	70	158
			41.7	50.2	83.7	90	80	216	85.5	90	82	218
	575–3–60	STD	–	–	15.2	20	16	79	19.0	25	21	83
			17.0	20.4	40.7	45	40	99	44.5	45	44	103
			34.0	40.9	66.3	70	63	120	70.1	80	68	124
		MED	–	–	15.6	20	17	94	19.4	25	21	98
			17.0	20.4	41.1	45	40	114	44.9	45	45	118
			34.0	40.9	66.7	70	64	135	70.5	80	68	139
		HIGH	–	–	15.6	20	17	94	19.4	25	21	98
			17.0	20.4	41.1	45	40	114	44.9	45	45	118
			34.0	40.9	66.7	70	64	135	70.5	80	68	139

See Notes page 67.

Table 58 – (cont.) MCA/MOCP DETERMINATION WITH PWRD C.O.

UNIT	NOM. V–PH–HZ	IFM TYPE	ELECTRIC HEATER		WITH PWRD C.O.							
					WITHOUT P.E.				WITH P.E.			
			Nom (kW)	FLA	MCA	MOCP	DISC. SIZE		MCA	MOCP	DISC. SIZE	
							FLA	LRA			FLA	LRA
50TCQD09	208/230–3–60	STD	–	–	46.7	60	49	206	50.5	60	53	210
			7.8/10.4	21.7/25.0	73.8/78.0	80/80	74/78	228/231	77.6/81.8	80/90	78/82	232/235
			12.0/16.0	33.4/38.5	88.5/94.8	90/100	88/93	239/245	92.3/98.6	100/100	92/98	243/249
			18.6/24.8	51.7/59.7	111.3/121.3	125/125	109/118	258/266	115.1/125.1	125/150	113/122	262/270
			24.0/32.0	66.7/77.0	130.1/143.0	150/150	126/138	273/283	133.9/146.8	150/150	130/142	277/287
			31.8/42.4	88.4/102.0	157.2/174.2	175/175	151/166	383/410	161.0/178.0	175/200	155/171	387/414
		MED	–	–	49.0	60	52	243	52.8	60	56	247
			7.8/10.4	21.7/25.0	76.1/80.3	80/90	77/81	265/268	79.9/84.1	80/90	81/85	269/272
			12.0/16.0	33.4/38.5	90.8/97.1	100/100	90/96	276/282	94.6/100.9	100/110	95/100	280/286
			18.6/24.8	51.7/59.7	113.6/123.6	125/125	111/120	295/303	117.4/127.4	125/150	116/125	299/307
			24.0/32.0	66.7/77.0	132.4/145.3	150/150	128/140	310/320	136.2/149.1	150/150	133/145	314/324
			31.8/42.4	88.4/102.0	159.5/176.5	175/200	153/169	420/447	163.3/180.3	175/200	158/173	424/451
		HIGH	–	–	49.0	60	52	243	52.8	60	56	247
			7.8/10.4	21.7/25.0	76.1/80.3	80/90	77/81	265/268	79.9/84.1	80/90	81/85	269/272
			12.0/16.0	33.4/38.5	90.8/97.1	100/100	90/96	276/282	94.6/100.9	100/110	95/100	280/286
			18.6/24.8	51.7/59.7	113.6/123.6	125/125	111/120	295/303	117.4/127.4	125/150	116/125	299/307
			24.0/32.0	66.7/77.0	132.4/145.3	150/150	128/140	310/320	136.2/149.1	150/150	133/145	314/324
			31.8/42.4	88.4/102.0	159.5/176.5	175/200	153/169	420/447	163.3/180.3	175/200	158/173	424/451
	460–3–60	STD	–	–	21.4	25	23	102	23.2	30	25	104
			13.9	16.7	42.2	45	42	119	44.0	45	44	121
			16.5	19.8	46.1	50	45	122	47.9	50	47	124
			27.8	33.4	63.1	70	61	135	64.9	70	63	137
			33.0	39.7	71.0	80	68	142	72.8	80	70	144
			41.7	50.2	84.1	90	80	202	85.9	90	82	204
		MED	–	–	22.2	25	23	121	24.0	30	26	123
			13.9	16.7	43.0	45	43	138	44.8	45	45	140
			16.5	19.8	46.9	50	46	141	48.7	50	48	143
			27.8	33.4	63.9	70	62	154	65.7	70	64	156
			33.0	39.7	71.8	80	69	161	73.6	80	71	163
			41.7	50.2	84.9	90	81	221	86.7	90	83	223
		HIGH	–	–	22.2	25	23	121	24.0	30	26	123
			13.9	16.7	43.0	45	43	138	44.8	45	45	140
			16.5	19.8	46.9	50	46	141	48.7	50	48	143
			27.8	33.4	63.9	70	62	154	65.7	70	64	156
			33.0	39.7	71.8	80	69	161	73.6	80	71	163
			41.7	50.2	84.9	90	81	221	86.7	90	83	223
	575–3–60	STD	–	–	17.1	20	18	87	20.9	25	22	91
			17.0	20.4	42.6	45	42	107	46.4	50	46	111
			34.0	40.9	68.2	70	65	128	72.0	80	69	132
		MED	–	–	17.5	20	19	102	21.3	25	23	106
			17.0	20.4	43.0	45	42	122	46.8	50	46	126
			34.0	40.9	68.6	70	66	143	72.4	80	70	147
		HIGH	–	–	17.5	20	19	102	21.3	25	23	106
			17.0	20.4	43.0	45	42	122	46.8	50	46	126
			34.0	40.9	68.6	70	66	143	72.4	80	70	147

See Notes page 67.

Table 58 – (cont.) MCA/MOCP DETERMINATION WITH PWRD C.O.

UNIT	NOM. V–PH–HZ	IFM TYPE	ELEC. HTR		WITH PWRD C.O.							
					WITHOUT P.E.				WITH P.E. (pwrd fr/unit)			
			Nom (kW)	FLA	MCA	MOCP	DISC. SIZE		MCA	MOCP	DISC. SIZE	
							FLA	LRA			FLA	LRA
50TCQD12	208/230–3–60	STD	–	–	51.7	60	55	287	55.5	60	59	291
			7.8/10.4	21.7/25.0	78.8/82.9	80/90	80/84	309/312	82.6/86.7	90/90	84/88	313/316
			12.0/16.0	33.4/38.5	93.4/99.8	100/100	93/99	320/326	97.2/103.6	100/110	98/104	324/330
			24.0/32.0	66.7/77.0	135.1/147.9	150/150	132/143	354/364	138.9/151.7	150/175	136/148	358/368
			31.8/42.4	88.4/102.0	162.2/179.2	175/200	157/172	464/491	166.0/183.0	175/200	161/177	468/495
			37.6/50.0	104.2/120.3	181.9/172.0	200/200	175/193	495/528	185.7/175.8	200/200	179/198	499/532
		MED	–	–	56.5	70	60	330	60.3	70	65	334
			7.8/10.4	21.7/25.0	83.6/87.7	90/90	85/89	352/355	87.4/91.5	90/100	90/93	356/359
			12.0/16.0	33.4/38.5	98.2/104.6	100/110	99/105	363/369	102.0/108.4	110/110	103/109	367/373
			24.0/32.0	66.7/77.0	139.9/152.7	150/175	137/149	397/407	143.7/156.5	150/175	141/153	401/411
			31.8/42.4	88.4/102.0	167.0/184.0	175/200	162/178	507/534	170.8/187.8	175/200	166/182	511/538
			37.6/50.0	104.2/120.3	186.7/176.8	200/200	180/199	538/571	190.5/180.6	200/200	185/203	542/575
		HIGH	–	–	61.5	70	66	339	65.3	80	70	343
			7.8/10.4	21.7/25.0	88.6/92.7	90/100	91/95	361/364	92.4/96.5	100/100	95/99	365/368
			12.0/16.0	33.4/38.5	103.2/109.6	110/110	105/110	372/378	107.0/113.4	110/125	109/115	376/382
			24.0/32.0	66.7/77.0	144.9/157.7	150/175	143/155	406/416	148.7/161.5	150/175	147/159	410/420
			31.8/42.4	88.4/102.0	172.0/189.0	175/200	168/183	516/543	175.8/192.8	200/200	172/188	520/547
			37.6/50.0	104.2/120.3	191.7/181.8	200/200	186/204	547/580	195.5/185.6	200/200	190/209	551/584
	460–3–60	STD	–	–	25.2	30	27	137	27.0	30	29	139
			13.9	16.7	46.1	50	46	154	47.9	50	48	156
			16.5	19.8	50.0	50	50	157	51.8	60	52	159
			33.0	39.7	74.9	80	72	177	76.7	80	75	179
			41.7	50.2	88.0	90	85	237	89.8	90	87	239
			50.0	60.1	85.3	90	96	257	87.1	90	98	259
		MED	–	–	27.0	30	29	159	28.8	35	31	161
			13.9	16.7	47.9	50	48	176	49.7	50	50	178
			16.5	19.8	51.8	60	52	179	53.6	60	54	181
			33.0	39.7	76.7	80	75	199	78.5	80	77	201
			41.7	50.2	89.8	90	87	259	91.6	100	89	261
			50.0	60.1	87.1	90	98	279	88.9	100	100	281
		HIGH	–	–	30.0	35	32	163	31.8	35	34	165
			13.9	16.7	50.9	60	52	180	52.7	60	54	182
			16.5	19.8	54.8	60	55	183	56.6	60	57	185
			33.0	39.7	79.7	80	78	203	81.5	90	80	205
			41.7	50.2	92.8	100	90	263	94.6	100	92	265
			50.0	60.1	90.1	100	101	283	91.9	100	104	285
	575–3–60	STD	–	–	19.2	25	20	107	23.0	25	25	111
			17.0	20.4	44.7	45	44	127	48.5	50	48	131
			34.0	40.9	70.3	80	67	148	74.1	80	72	152
			51.0	61.3	80.5	90	91	230	84.3	90	95	234
		MED	–	–	20.0	25	21	118	23.8	30	26	122
			17.0	20.4	45.5	50	45	138	49.3	50	49	142
			34.0	40.9	71.1	80	68	159	74.9	80	73	163
			51.0	61.3	81.3	90	92	241	85.1	90	96	245
		HIGH	–	–	22.8	25	24	132	26.6	30	29	136
			17.0	20.4	48.3	50	48	152	52.1	60	52	156
			34.0	40.9	73.9	80	72	173	77.7	80	76	177
			51.0	61.3	84.1	90	95	255	87.9	90	99	259

See Notes page 67.

Table 58 – (cont.) MCA/MOCP DETERMINATION WITH PWRD C.O.

UNIT	NOM. V–Ph–Hz	IFM TYPE	ELEC. HTR		w/ PWRD C.O.							
					NO P.E.				w/ P.E. (pwrd fr/unit)			
			Nom (kW)	FLA	MCA	MOCP	DISC. SIZE		MCA	MOCP	DISC. SIZE	
							FLA	LRA			FLA	LRA
50TCQD14	208/230–3–60	STD	–	–	67.2	80.0	71.0	371.0	71.0	80.0	75.0	375.0
			12.4/16.5	34.4/39.7	110.2/116.8	125/125	110/116	405/411	114.0/120.6	125/125	115/121	409/415
			19.9/26.5	55.3/63.8	136.3/147.0	150/150	134/144	482/499	140.1/150.8	150/175	139/149	486/503
			25.2/33.5	69.9/80.6	154.6/168.0	175/175	151/164	441/452	158.4/171.8	175/175	156/168	445/456
			32.7/43.5	90.7/104.7	180.6/198.1	200/200	175/191	552/580	184.4/201.9	200/225	180/196	556/584
			37.6/50.0	104.3/120.3	197.6/187.5	200/200	191/209	580/612	201.4/191.3	225/200	195/214	584/616
		MED	–	–	67.2	80.0	71.0	371.0	71.0	80.0	75.0	375.0
			12.4/16.5	34.4/39.7	110.2/116.8	125/125	110/116	405/411	114.0/120.6	125/125	115/121	409/415
			19.9/26.5	55.3/63.8	136.3/147.0	150/150	134/144	482/499	140.1/150.8	150/175	139/149	486/503
			25.2/33.5	69.9/80.6	154.6/168.0	175/175	151/164	441/452	158.4/171.8	175/175	156/168	445/456
			32.7/43.5	90.7/104.7	180.6/198.1	200/200	175/191	552/580	184.4/201.9	200/225	180/196	556/584
			37.6/50.0	104.3/120.3	197.6/187.5	200/200	191/209	580/612	201.4/191.3	225/200	195/214	584/616
		HIGH	–	–	76.4/74.9	90/90	81/80	399.0	80.2/78.7	100/100	86/84	403.0
			12.4/16.5	34.4/39.7	119.4/124.5	125/125	121/125	433/439	123.2/128.3	125/150	125/130	437/443
			19.9/26.5	55.3/63.8	145.5/154.7	150/175	145/153	510/527	149.3/158.5	150/175	149/157	514/531
			25.2/33.5	69.9/80.6	163.8/175.7	175/200	162/172	469/480	167.6/179.5	175/200	166/177	473/484
			32.7/43.5	90.7/104.7	189.8/205.8	200/225	186/200	580/608	193.6/209.6	200/225	190/204	584/612
			37.6/50.0	104.3/120.3	206.8/195.2	225/225	201/218	608/640	210.6/199.0	225/225	206/222	612/644
	460–3–60	STD	–	–	31.9	40.0	34.0	186.0	33.7	40.0	36.0	188.0
			16.5	19.9	56.7	60	56	206	58.5	60	59	208
			26.5	31.9	71.7	80	70	250	73.5	80	72	252
			33.5	40.3	82.2	90	80	226	84.0	90	82	228
			43.5	52.3	97.2	100	94	291	99.0	100	96	293
			50.0	60.2	92.1	100	103	306	93.9	100	105	308
		MED	–	–	31.9	40.0	34.0	186.0	33.7	40.0	36.0	188.0
			16.5	19.9	56.7	60	56	206	58.5	60	59	208
			26.5	31.9	71.7	80	70	250	73.5	80	72	252
			33.5	40.3	82.2	90	80	226	84.0	90	82	228
			43.5	52.3	97.2	100	94	291	99.0	100	96	293
			50.0	60.2	92.1	100	103	306	93.9	100	105	308
		HIGH	–	–	36.1	45.0	38.0	200.0	37.9	45.0	40.0	202.0
			16.5	19.9	60.9	70	61	220	62.7	70	63	222
			26.5	31.9	75.9	80	75	264	77.7	80	77	266
			33.5	40.3	86.4	90	85	240	88.2	90	87	242
			43.5	52.3	101.4	110	99	305	103.2	110	101	307
			50.0	60.2	96.3	100	108	320	98.1	110	110	322
	575–3–60	STD	–	–	25.7	30.0	27.0	138.0	29.5	35.0	32.0	142.0
			16.5	15.9	45.6	50	45	154	49.4	50	50	158
			26.5	25.5	57.6	60	56	189	61.4	70	61	193
			33.5	32.2	66.0	70	64	170	69.8	70	69	174
			43.5	41.8	78.0	80	75	222	81.8	90	80	226
			50.0	48.1	73.8	80	82	234	77.6	80	87	238
		MED	–	–	25.7	30.0	27.0	138.0	29.5	35.0	32.0	142.0
			16.5	15.9	45.6	50	45	154	49.4	50	50	158
			26.5	25.5	57.6	60	56	189	61.4	70	61	193
			33.5	32.2	66.0	70	64	170	69.8	70	69	174
			43.5	41.8	78.0	80	75	222	81.8	90	80	226
			50.0	48.1	73.8	80	82	234	77.6	80	87	238
		HIGH	–	–	29.0	35.0	31.0	141.0	32.8	40.0	35.0	145.0
			16.5	15.9	48.9	50	49	157	52.7	60	54	161
			26.5	25.5	60.9	70	60	192	64.7	70	65	196
			33.5	32.2	69.3	70	68	173	73.1	80	72	177
			43.5	41.8	81.3	90	79	225	85.1	90	83	229
			50.0	48.1	77.1	80	86	237	80.9	90	91	241

See Notes page 67.

TYPICAL WIRING DIAGRAMS

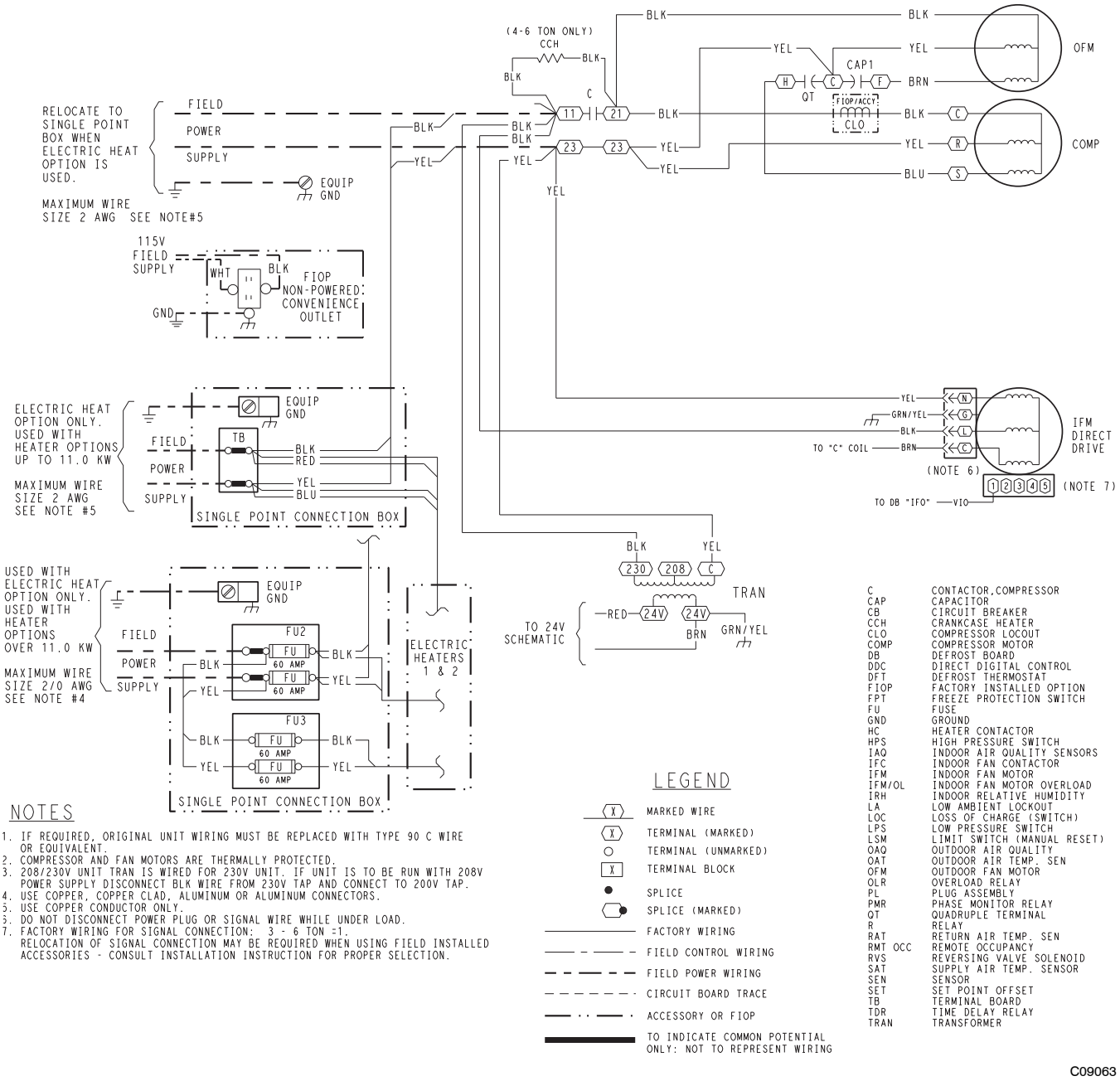

Fig. 28 - 1-Stage Cooling Typical Power Diagram

TYPICAL WIRING DIAGRAMS (cont.)

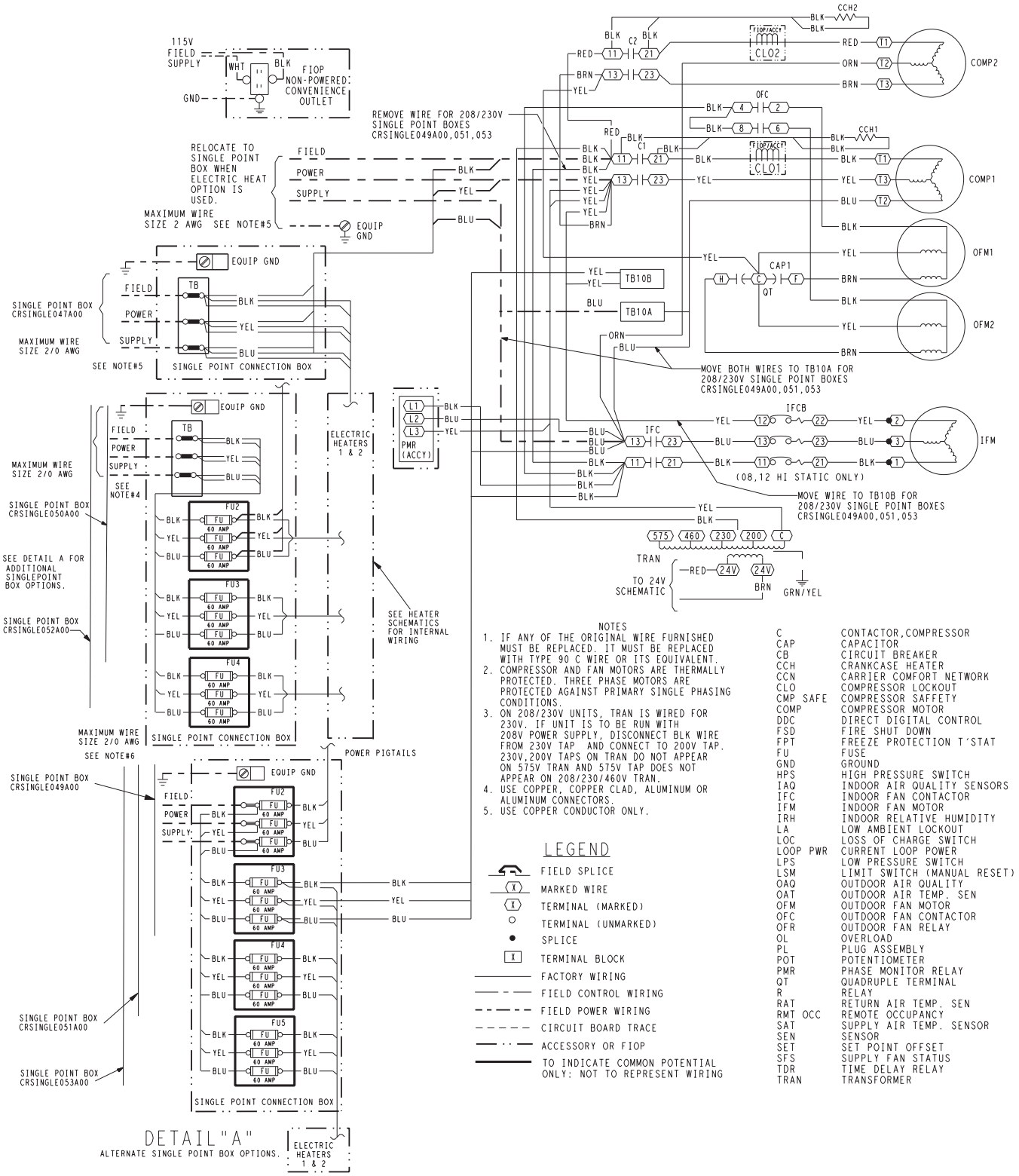

Fig. 29 – 2-Stage Cooling Typical Power Diagram

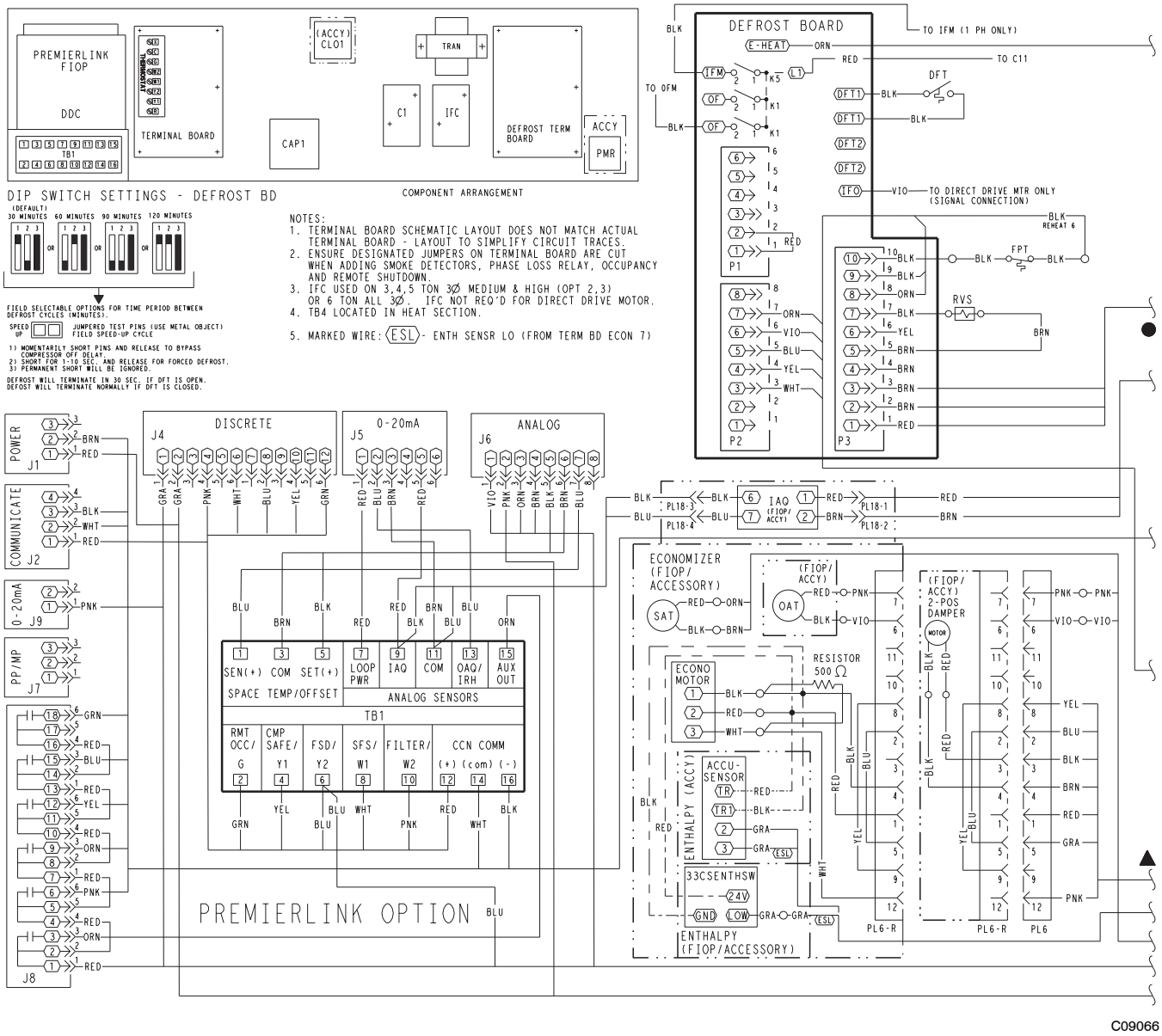

Fig. 30 - PremierLink Option Diagram

50TCQ

TYPICAL WIRING DIAGRAMS (cont.)

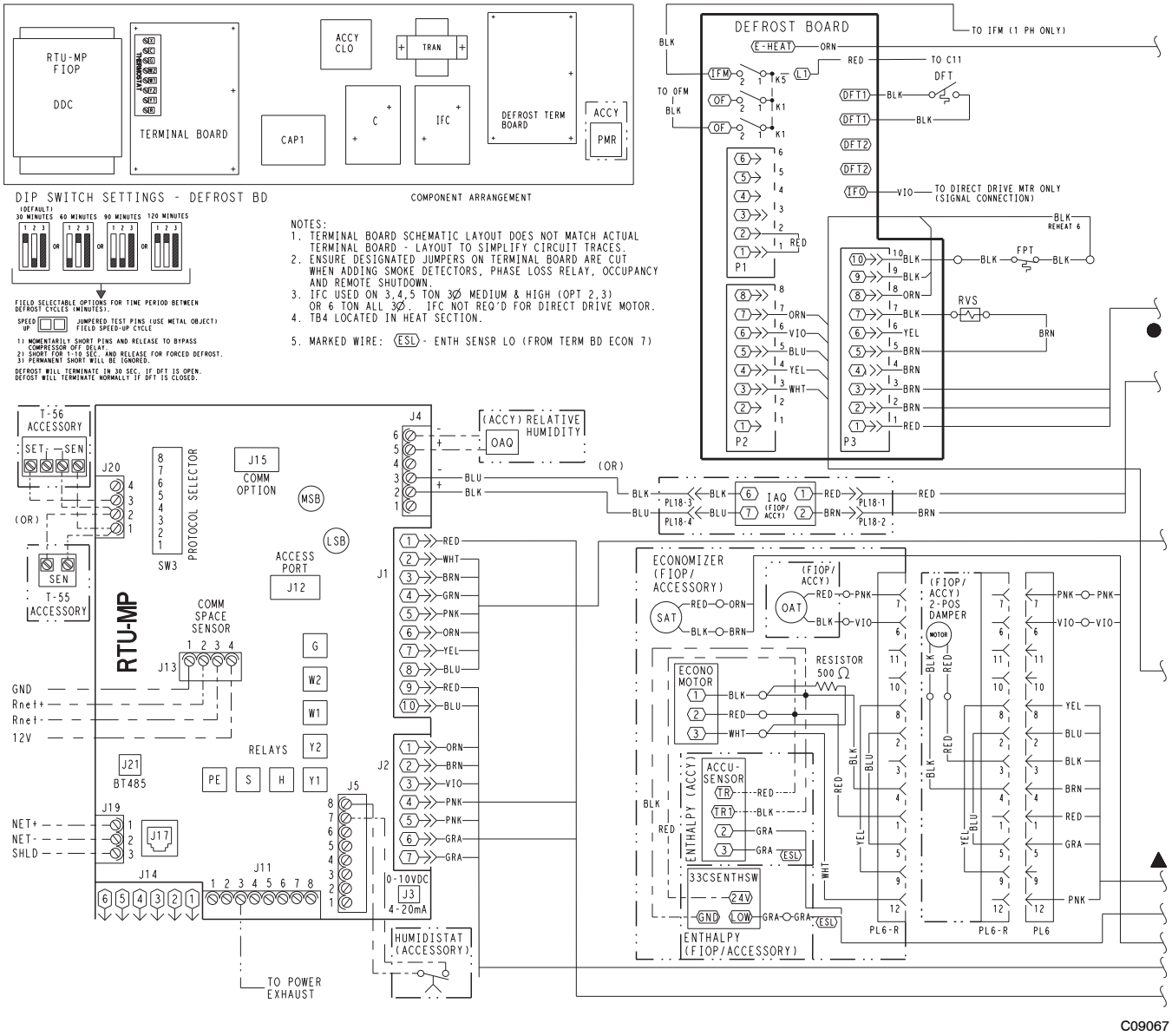

Fig. 31 - Multi-Protocol Option Diagram

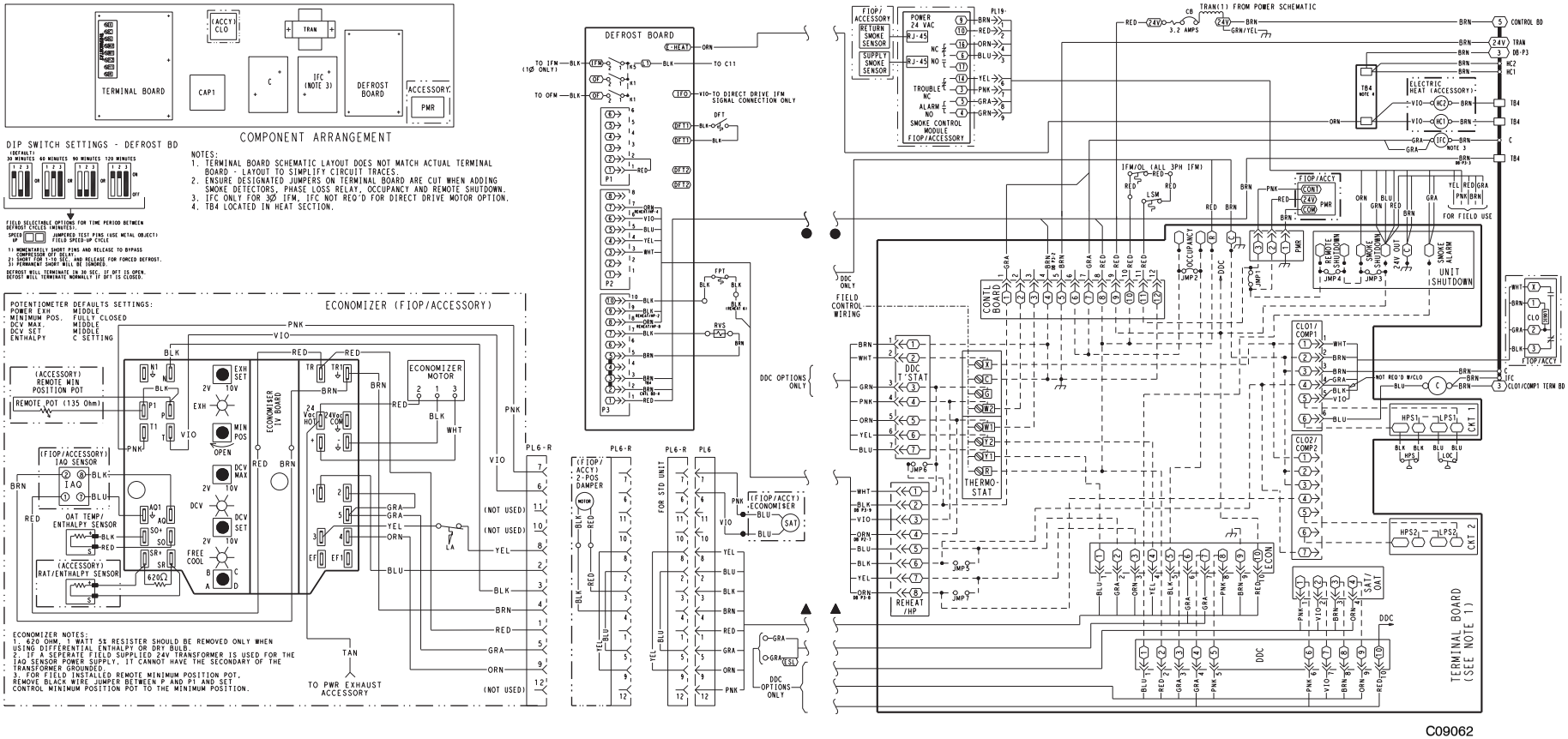

Fig. 32 - 1-Stage Typical Wiring Diagram

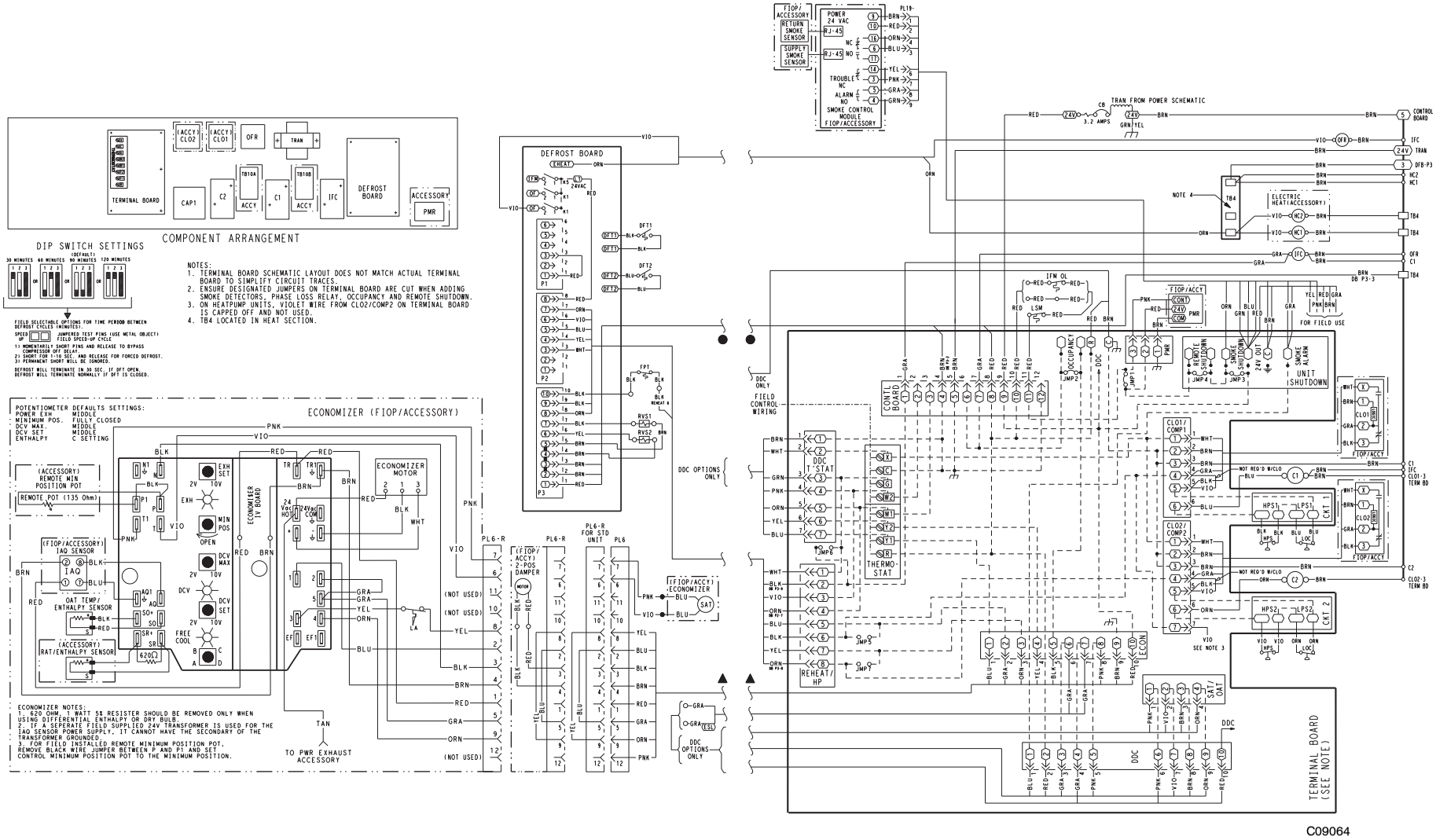

Fig. 33 - 2-Stage Typical Wiring Diagram

Cooling, unit without economizer

When thermostat calls for cooling, terminals G and Y1 are energized. The indoor fan contactor (IFC), reversing valve solenoid (RVS) and compressor contactor are energized and indoor fan motor, compressor, and outdoor fan starts. The outdoor fan motor runs continuously while unit is cooling.

Two-stage models: If Stage 1 cooling does not satisfy the space load, the space temperature will rise until thermostat calls for Stage 2 cooling (Y2 closes). Defrost Board activates Stage 2 Compressor. Reversing valve 2 switches to Cooling position. Compressor 2 contactor is energized; Compressor 2 starts and Circuit 2 operates in Cooling mode.

When Cooling Stage 2 is satisfied, thermostat Y2 opens. Compressor 2 contactor is de-energized; Compressor 2 stops. Reversing Valve 2 remains energized.

When Cooling Stage 1 is satisfied, thermostat Y1 opens. Compressor 1 contactor is de-energized; Compressor 1 stops. Outdoor fan relay is de-energized; outdoor fans stop. After the Fan Delay period, the Indoor fan contactor is de-energized; indoor fan stops (unless Continuous Fan operation has been selected). Reversing Valve 1 remains energized.

Reversing valve solenoids are energized in Cooling modes. Each solenoid will remain energized until the next Heating mode is initiated for this circuit.

Heating, unit without economizer

Upon a request for heating from the space thermostat, terminal W1 will be energized with 24V. The IFC, outdoor fan contactor (OFC), C1, and C2 will be energized. The indoor fan, outdoor fans, and compressor no. 1, and compressor no. 2 are energized and reversing valves are de-energized and switch position.

If the space temperature continues to fall while W1 is energized, W2 will be energized with 24V, and the heater contactor(s) (HC) will be energized, which will energize the electric heater(s).

When the space thermostat is satisfied, W2 will be de-energized first, and the electric heater(s) will be de-energized.

Upon a further rise in space temperature, W1 will be de-energized.

Two compressor models: When the thermostat calls for heating, terminal W1 is energized. Defrost Board de-energizes both reversing valve solenoids and reversing valves move to Heating position. The indoor fan contactor is energized; indoor fan motor starts. Outdoor fan relay is energized; both outdoor fan motors run. Compressor contactors C1 and C2 are energized; both refrigeration circuits operate in Heating mode.

If Stage 1 heating does not satisfy the space load, the space temperature will fall until thermostat calls for Stage 2 heating (W2 closes). Terminal W2 is energized. Defrost Board issues an output at EHEAT. Heater contactor 1 and heater contactor 2 (if installed) are energized; all electric heaters are energized.

When space heating load is partially satisfied, thermostat terminal W2 is de-energized; heater contactors are de-energized and all electric heat is terminated. Stage 1 heating continues.

When the space heating load is fully satisfied, thermostat terminal W1 is also de-energized.

Reversing valve solenoids remain de-energized until the next call for Cooling mode is initiated.

Cooling, unit with EconoMi$er IV

When free cooling is not available, the compressors will be controlled by the zone thermostat. When free cooling is available, the outdoor air damper is modulated by the EconoMi$er IV control to provide a 50 to 55°F (10° to 13°C) mixed air temperature into the zone. As the mixed air temperature fluctuates above 55 or below 50°F (13° to 10°C), the dampers will be modulated (open or close) to bring the mixed air temperature back within control.

If mechanical cooling is utilized with free cooling, the outdoor air damper will maintain its current position at the time the compressor is started. If the increase in cooling capacity causes the mixed air temperature to drop below 45°F (7°C), then the outdoor air damper position will be decreased to the minimum position. If the mixed air temperature continues to fall, the outdoor air damper will close. Control returns to normal once the mixed air temperature rises above 48°F (9°C).

If optional power exhaust is installed, as the outdoor air damper opens and closes, the power exhaust fans will be energized and de-energized.

If field-installed accessory CO_2 sensors are connected to the EconoMi$er IV control, a demand controlled ventilation strategy will begin to operate. As the CO_2 level in the zone increases above the CO_2 setpoint, the minimum position of the damper will be increased proportionally. As the CO_2 level decreases because of the increase in fresh air, the outdoor air damper will be proportionally closed.

For EconoMi$er IV operation, there must be a thermostat call for the fan (G). If the unit is occupied and the fan is on, the damper will operate at minimum position. Otherwise, the damper will be closed.

When the EconoMi$er IV control is in the occupied mode and a call for cooling exists (Y1 on the thermostat), the control will first check for indoor fan operation. If the fan is not on, then cooling will not be activated. If the fan is on, then the control will open the EconoMi$er IV damper to the minimum position.

On the initial power to the EconoMi$er IV control, it will take the damper up to $2^1/_2$ minutes before it begins to position itself. Any change in damper position will take

up to 30 seconds to initiate. Damper movement from full closed to full open (or vice versa) will take between $1^1/_2$ and $2^1/_2$ minutes.

If free cooling can be used as determined from the appropriate changeover command (switch, dry bulb, enthalpy curve, differential dry bulb, or differential enthalpy), then the control will modulate the dampers open to maintain the mixed air temperature setpoint at 50° to 55°F (10° to 13°C).

If there is a further demand for cooling (cooling second stage — Y2 is energized), then the control will bring on compressor stage 1 to maintain the mixed air temperature setpoint. The EconoMi$er IV damper will be open at maximum position. EconoMi$er IV operation is limited to a single compressor.

Heating, unit with EconoMi$er

When the room temperature calls for heat through terminal W1, the indoor (evaporator) fan contactor (IFC) and heater contactor no. 1 (HC1) are energized and the reversing valve(s) de-energize and switches position. On units equipped for 2 stages of heat, when additional heat is needed, heater contactor no. 2 is energized through W2. The economizer damper moves to the minimum position. When the thermostat is satisfied, the damper moves to the fully closed position.

Cooling, unit with EconoMi$er2, PremierLink control and a thermostat

When free cooling is not available, the compressors will be controlled by the PremierLink control in response to the Y1 and Y2 inputs from the thermostat.

The PremierLink control will use the following information to determine if free cooling is available:

- Indoor fan has been on for at least 30 seconds.
- The SPT, SAT, and OAT inputs must have valid readings.
- OAT must be less than 75°F (24°C).
- OAT must be less than SPT.
- Enthalpy must be LOW (may be jumpered if an enthalpy sensor not available).
- Economizer position is NOT forced.

Pre-cooling occurs when there is no call from the thermostat except G. Pre-cooling is defined as the economizer modulates to provide 70°F (21°C) supply air.

When free cooling is available the PremierLink control will control the compressors, energize the reversing valve(s) and economizer to provide a supply air temperature determined to meet the Y1 and Y2 calls from the thermostat.

If optional power exhaust is installed, as the outdoor air damper opens and closes, the power exhaust fans will be energized and de-energized.

If field-installed accessory CO_2 sensors are connected to the PremierLink control, a PID controlled demand ventilation strategy will begin to operate. As the CO_2 level in the zone increases above the CO_2 setpoint, the minimum position of the damper will be increased proportionally. As the CO_2 level decreases because of the increase in fresh air, the outdoor air damper will be proportionally closed.

Heating, unit with EconoMi$er2, PremierLink control and a thermostat

When the thermostat calls for heating, terminal W1 is energized. The PremierLink control will move the economizer damper to the minimum position if there is a call for G and closed if there is a call for W1 without G. In order to prevent thermostat from short cycling, the unit is locked into the heating mode for at least 10 minutes when W1 is energized. The reversing valve solenoid(s) de-energizes and switches position.

On units equipped for two stages of heat, when additional heat is needed, W2 is energized and the electric heat (if used) comes on. When the thermostat is satisfied and W1 is de-energized, the IFM stops.

Cooling, unit with EconoMi$er2, PremierLink control and a room sensor

When free cooling is not available, the compressors will be controlled by the PremierLink controller using a PID Error reduction calculation.

The PremierLink controller will use the following information to determine if free cooling is available:

- Indoor fan has been on for at least 30 seconds.
- The SPT, SAT, and OAT inputs must have valid readings.
- OAT must be less than 75°F (24°C).
- OAT must be less than SPT.
- Enthalpy must be LOW (may be jumpered if an enthalpy sensor is not available).
- Economizer position is NOT forced.

When free cooling is available, the outdoor air damper is positioned through the use of a Proportional Integral (PID) control process to provide a calculated supply air temperature into the zone. The supply air will maintain the space temperature between the heating and cooling setpoints.

The PremierLink control will integrate the compressors stages with the economizer based on similar logic as the three routines listed in the previous section. The SASP will float up and down based on the error reduction calculations that compare space temperature and space setpoint. The reversing valves will be energized.

If an optional power exhaust is installed, as the outdoor air damper opens and closes, the power exhaust fans will be energized and de-energized.

If field- installed accessory CO_2 sensors are connected to the PremierLink control, a PID-controlled demand ventilation strategy will begin to operate. As the CO_2 level in the zone increases above the CO_2 setpoint, the minimum position of the damper will be increased proportionally. As the CO_2 level decreases because of the increase in fresh air, the outdoor air damper will be proportionally closed.

Heating, unit with EconoMi$er2, PremierLink control and a room sensor

Every 40 seconds the controller will calculate the required heat stages (maximum of 3) to maintain Supply Air Temperature (SAT) if the following qualifying conditions are met:

- Indoor fan has been on for at least 30 seconds.
- COOL mode is not active.
- OCCUPIED, TEMP.COMPENSATED START or HEAT mode is active.
- SAT reading is available.
- Fire shutdown mode is not active.

If all of the above conditions are met, the number of heat stages is calculated; otherwise the required number of heat stages will be set to 0.

If the PremierLink controller determines that heat stages are required, the economizer damper will be moved to minimum position if occupied and closed if unoccupied.

Defrost

When the temperature of the outdoor coil drops below 28°F (-2°C) as sensed by the defrost thermostat (DFT2) and the defrost timer is at the end of a timed period (adjustable at 30, 60, 90 or 120 minutes), reversing valve solenoids (RVS1 and RVS2) are energized and the OFC is de-energized. This switches the position of the reversing valves and shuts off the outdoor fan. The electric heaters (if installed) will be energized.

The unit continues to defrost until the coil temperature as measured by DFT2 reaches 65°F (18°C), or the duration of defrost cycle completes a 10-minute period.

During the Defrost mode, if circuit 1 defrosts first, RVS1 will oscillate between Heating and Cooling modes until the Defrost mode is complete.

At the end of the defrost cycle, the electric heaters (if installed) will be de-energized; the reversing valves switch and the outdoor fan motor will be energized. The unit will now operate in the Heating mode.

If the space thermostat is satisfied during a defrost cycle, the unit will continue in the Defrost mode until the time or temperature constraints are satisfied.

Automatic changeover

When the system selection switch is set at AUTO. position, unit automatically changes from heating operation to cooling operation when the temperature of the conditioned space rises to the cooling level setting. When the temperature of the conditioned space falls to the heating level setting, unit automatically changes from cooling to heating operation (with a 3°F deadband in between).

Continuous air circulation

Turn unit power on. Set system control at OFF position. Set fan switch at ON position. The indoor fan contactor is energized through the thermostat switch and the indoor fan runs continuously.

Emergency heat

When the switch is on (thermostat is set to the EM HT position), compressor circuit and outdoor thermostats are bypassed, and the second stage of thermostat energizes the indoor blower and the electric resistance heaters.

GUIDE SPECIFICATIONS - 50TCQ*04-14

Note about this specification:

Carrier created this specification in "Masterformat" as published by the Construction Specification Institute. Please feel free to copy this specification directly into your building specifications.

Rooftop Packaged Heat Pump

HVAC Guide Specifications

Size Range: **3 to 12.5 Nominal Tons**

Section **Description**

23 06 80 Schedules for Decentralized HVAC Equipment

23 06 80.13 Decentralized Unitary HVAC Equipment Schedule

23 06 80.13.A. Rooftop unit schedule

1. Schedule is per the project specification requirements.

23 07 16 HVAC Equipment Insulation

23 07 16.13 Decentralized, Rooftop Units:

23 07 16.13.A. Evaporator fan compartment:

1. Interior cabinet surfaces shall be insulated with a minimum 1/2-in. thick, minimum 1 1/2 lb density, flexible fiberglass insulation bonded with a phenolic binder, neoprene coated on the air side.
2. Insulation and adhesive shall meet NFPA 90A requirements for flame spread and smoke generation.

23 07 16.13.B. Electric heat compartment:

1. Aluminum foil-faced fiberglass insulation shall be used.
2. Insulation and adhesive shall meet NFPA 90A requirements for flame spread and smoke generation.

23 09 13 Instrumentation and Control Devices for HVAC

23 09 13.23 Sensors and Transmitters

23 09 13.23.A. Thermostats

1. Thermostat must
   a. have capability to energize 2 different stages of cooling, and 2 different stages of heating.
   b. include capability for occupancy scheduling.

23 09 23 Direct-digital Control system for HVAC

23 09 23.13 Decentralized, Rooftop Units:

23 09 23.13.A. PremierLink™ controller

1. Shall be ASHRAE 62-2001 compliant.
2. Shall accept 18-32VAC input power.
3. Shall have an operating temperature range from -40°F (-40°C) to 158°F (70°C), 10% - 95% RH (non-condensing).
4. Shall include an integrated economizer controller to support an economizer with 4 to 20 mA actuator input and no microprocessor controller.
5. Controller shall accept the following inputs: space temperature, setpoint adjustment, outdoor air temperature, indoor air quality, outdoor air quality, indoor relative humidity, compressor lock-out, fire shutdown, enthalpy, fan status, remote time clock/door switch.
6. Shall accept a CO_2 sensor in the conditioned space, and be Demand Control Ventilation (DCV) ready.
7. Shall provide the following outputs: Economizer, fan, cooling stage 1, cooling stage 2, heat stage 1, heat stage 2, heat stage 3/ exhaust/ reversing valve/ dehumidify/ occupied.
8. Unit shall provide surge protection for the controller through a circuit breaker.
9. Shall be Internet capable, and communicate at a Baud rate of 38.4K or faster
10. Shall have an LED display independently showing the status of activity on the communication bus, and processor operation.
11. Shall include an EIA-485 protocol communication port, an access port for connection of either a computer or a Carrier technician tool, an EIA-485 port for network communication to intelligent space sensors and displays, and a port to connect an optional LonWorks plug-in communications card.

12. Shall have built-in Carrier Comfort Network (CCN) protocol, and be compatible with other CCN devices, including ComfortLink and ComfortVIEW controllers.
13. Shall have built-in support for Carrier technician tool.
14. Software upgrades will be accomplished by local download. Software upgrades through chip replacements are not allowed.
15. Shall be shock resistant in all planes to 5G peak, 11ms during operation, and 100G peak, 11ms during storage.
16. Shall be vibration resistant in all planes to 1.5G @ 20-300 Hz.
17. Shall support a bus length of 4000 ft max, 60 devices per 1000 ft section, and 1 RS-485 repeater per 1000ft sections.

23 09 23.13.B. Multi-protocol, direct digital controller:

1. Shall be ASHRAE 62-2001 compliant.
2. Shall accept 18-30VAC, 50-60Hz, and consumer 15VA or less power.
3. Shall have an operating temperature range from -40°F (-40°C) to 130°F (54°C), 10% - 90% RH (non-condensing).
4. Shall include built-in protocol for BACNET (MS/TP and PTP modes), Modbus (RTU and ASCII), Johnson N2 and LonWorks. LonWorks Echelon processor required for all Lon applications shall be contained in separate communication board.
5. Shall allow access of up to 62 network variables (SNVT). Shall be compatible with all open controllers
6. Baud rate Controller shall be selectable using a dipswitch.
7. Shall have an LED display independently showing the status of serial communication, running, errors, power, all digital outputs, and all analog inputs.
8. Shall accept the following inputs: space temperature, setpoint adjustment, outdoor air temperature, indoor air quality, outdoor air quality, compressor lock-out, fire shutdown, enthalpy switch, and fan status/filter status/humidity/remote occupancy.
9. Shall provide the following outputs: economizer, fan, cooling stage 1, cooling stage 2, heat stage 1, heat stage 2, heat stage 3/ exhaust/ reversing valve.
10. Shall have built-in surge protection circuitry through solid state polyswitches. Polyswitches shall be used on incoming power and network connections. Polyswitches will return to normal when the “trip” condition clears.
11. Shall have a battery back-up capable of a minimum of 10,000 hours of data and time clock retention during power outages.
12. Shall have built-in support for Carrier technician tool.
13. Shall include an EIA-485 protocol communication port, an access port for connection of either a computer or a Carrier technician tool, an EIA-485 port for network communication to intelligent space sensors and displays, and a port to connect an optional LonWorks communications card.
14. Software upgrades will be accomplished by either local or remote download. No software upgrades through chip replacements are allowed.

23 09 33 Electric and Electronic Control System for HVAC

23 09 33.13 Decentralized, Rooftop Units:

23 09 33.13.A. General:

1. Shall be complete with self-contained low voltage control circuit protected by a resettable circuit breaker on the 24-v transformer side. Transformer shall have 75VA capability.
2. Shall utilize color-coded wiring.
3. Shall include a central control terminal board to conveniently and safely provide connection points for vital control functions such as: smoke detectors, phase monitor, economizer, thermostat, DDC control options, loss of charge, freeze switch, high pressure switches.
4. Unit shall include a minimum of one 8-pin screw terminal connection board for connection of control wiring.
5. Shall include integrated defrost system to prevent excessive frost accumulation during heating duty, and shall be controlled as follows:
   a. Defrost shall be initiated on the basis of time and coil temperature.
   b. A 30,60,90,120 minute timer shall activate the defrost cycle only if the coil temperature is low enough to indicate a heavy frost condition.
   c. Defrost cycle shall terminate when defrost thermostat is satisfied and shall have a positive termination time of 10 minutes.
6. Defrost system shall also include:
   a. Defrost Cycle Indicator LED.
   b. Dip switch selectable defrost time between 30,60,90 and 120 minutes. Factory set at 30 minutes.

c. Molded plug connection to insure proper connection.

23 09 33.23.B. Safeties:

1. Compressor overtemperature, overcurrent.
2. Loss of charge switch.
   a. Units with 2 compressors shall have different sized connectors for the circuit 1 and circuit 2 low and high pressure switches. They shall physically prevent the cross-wiring of the safety switches between circuits 1 and 2.
   b. Loss of charge switch shall use different color wire than the high pressure switch. The purpose is to assist the installer and service technician to correctly wire and or troubleshoot the rooftop unit.
3. High pressure switch.
   a. Units with 2 compressors shall have different sized connectors for the circuit 1 and circuit 2 low and high pressure switches. They shall physically prevent the cross-wiring of the safety switches between circuits 1 and 2.
   b. High pressure switch shall use different color wire than the low pressure switch. The purpose is to assist the installer and service technician to correctly wire and or troubleshoot the rooftop unit.
4. Freeze protection thermostat, evaporator coil.
5. Automatic reset, motor thermal overload protector.

23 09 93 Sequence of Operations for HVAC Controls

23 09 93.13 Decentralized, Rooftop Units:

23 09 93.13 INSERT SEQUENCE OF OPERATION

23 40 13 Panel Air Filters

23 40 13.13 Decentralized, Rooftop Units:

23 40 13.13.A. Standard filter section

1. Shall consist of factory-installed, low velocity, throwaway 2-in. thick fiberglass filters of commercially available sizes.
2. Unit shall use only one filter size. Multiple sizes are not acceptable.
3. Filters shall be accessible through an access panel with “no-tool” removal as described in the unit cabinet section of this specification (23 81 19.13.H).

23 81 19 Self-Contained Air Conditioners

23 81 19.13 Small-Capacity Self-Contained Air Conditioners (50TCQ*04-14)

23 81 19.13.A. General

1. Outdoor, rooftop mounted, electrically controlled, heating and cooling unit utilizing a(n) hermetic scroll compressor(s) for cooling duty and heat pump for heating duty.
2. Factory assembled, single piece heating and cooling rooftop unit. Contained within the unit enclosure shall be all factory wiring, piping, controls, and special features required prior to field startup.
3. Unit shall use environmentally safe, Puron refrigerant.
4. Unit shall be installed in accordance with the manufacturer’s instructions.
5. Unit must be selected and installed in compliance with local, state, and federal codes.

23 81 19.13.B. Quality Assurance

1. Unit meets ASHRAE 90.1-2004 minimum efficiency requirements.
2. Unit shall be rated in accordance with AHRI Standards 210/240 and 340/360.
3. Unit shall be designed to conform to ASHRAE 15, 2001.
4. Unit shall be UL-tested and certified in accordance with ANSI Z21.47 Standards and UL-listed and certified under Canadian standards as a total package for safety requirements.
5. Insulation and adhesive shall meet NFPA 90A requirements for flame spread and smoke generation.
6. Unit casing shall be capable of withstanding 500-hour salt spray exposure per ASTM B117 (scribed specimen).
7. Unit casing shall be capable of withstanding Federal Test Method Standard No. 141 (Method 6061) 5000-hour salt spray.
8. Unit shall be designed in accordance with ISO 9001:2000, and shall be manufactured in a facility registered by ISO 9001:2000.
9. Roof curb shall be designed to conform to NRCA Standards.
10. Unit shall be subjected to a completely automated run test on the assembly line. The data for each unit will be stored at the factory, and must be available upon request.
11. Unit shall be designed in accordance with UL Standard 1995, including tested to withstand rain.
12. Unit shall be constructed to prevent intrusion of snow and tested to prevent snow intrusion into the control box up to 40 mph.

13. Unit shake tested to assurance level 1, ASTM D4169 to ensure shipping reliability.

23 81 19.13.C. Delivery, Storage, and Handling

1. Unit shall be stored and handled per manufacturer's recommendations.
2. Lifted by crane requires either shipping top panel or spreader bars.
3. Unit shall only be stored or positioned in the upright position.

23 81 19.13.D. Project Conditions

1. As specified in the contract.

23 81 19.13.E. Project Conditions

1. As specified in the contract.

23 81 19.13.F. Operating Characteristics

1. Unit shall be capable of starting and running at 115°F (46°C) ambient outdoor temperature, meeting maximum load criteria of AHRI Standard 210/240 or 340/360 at ± 10% voltage.
2. Compressor with standard controls shall be capable of operation from 25°F (-4°C), ambient outdoor temperatures. Accessory winter start kit is necessary if mechanically cooling at ambient temperatures below 25°F (-4°C).
3. Unit shall be capable of simultaneous heating duty and defrost cycle operation when using accessory electric heaters.
4. Unit shall discharge supply air vertically or horizontally as shown on contract drawings.
5. Unit shall be factory configured for vertical supply & return configurations.
6. Unit shall be field convertible from vertical to horizontal configuration
7. Unit shall be capable of mixed operation: vertical supply with horizontal return or horizontal supply with vertical return.

23 81 19.13.G. Electrical Requirements

1. Main power supply voltage, phase, and frequency must match those required by the manufacturer.

23 81 19.13.H. Unit Cabinet

1. Unit cabinet shall be constructed of galvanized steel, and shall be bonderized and coated with a prepainted baked enamel finish on all externally exposed surfaces.
2. Unit cabinet exterior paint shall be: film thickness, (dry) 0.003 inches minimum, gloss (per ASTM D523, 60°F): 60, Hardness: H-2H Pencil hardness.
3. Evaporator fan compartment interior cabinet insulation shall conform to AHRI Standards 210/240 or 340/360 minimum exterior sweat criteria. Interior surfaces shall be insulated with a minimum 1/2-in. thick, 1 lb density, flexible fiberglass insulation, neoprene coated on the air side. Aluminum foil-faced fiberglass insulation shall be used in the heat compartment.
4. Base of unit shall have a minimum of three locations for thru-the-base electrical connections (factory-installed or field-installed), standard.
5. Base Rail
   a. Unit shall have base rails on a minimum of 2 sides.
   b. Holes shall be provided in the base rails for rigging shackles to facilitate maneuvering and overhead rigging.
   c. Holes shall be provided in the base rail for moving the rooftop by fork truck.
   d. Base rail shall be a minimum of 16 gauge thickness.
6. Condensate pan and connections:
   a. Shall be a sloped condensate drain pan made of a non-corrosive material.
   b. Shall comply with ASHRAE Standard 62.
   c. Shall use a 3/4-in. -14 NPT drain connection, possible either through the bottom or end of the drain pan. Connection shall be made per manufacturer's recommendations.
7. Top panel:
   a. Shall be a single piece top panel on 04 thru 09 sizes.
8. Electrical Connections
   a. All unit power wiring shall enter unit cabinet at a single, factory prepared, knockout location.
   b. Thru-the-base capability
   (1.) Standard unit shall have a thru-the-base electrical location(s) using a raised, embossed portion of the unit basepan.
   (2.) Optional, factory approved, watertight connection method must be used for thru-the-base electrical connections.
   (3.) No basepan penetration, other than those authorized by the manufacturer, is permitted.

9. Component access panels (standard)
   a. Cabinet panels shall be easily removable for servicing.
   b. Unit shall have one factory-installed, tool-less, removable, filter access panel.
   c. Panels covering control box, indoor fan, indoor fan motor, gas components (where applicable), and compressors shall have molded composite handles.
   d. Handles shall be UV modified, composite. permanently attached, and recessed into the panel.
   e. Screws on the vertical portion of all removable access panel shall engage into heat resistant, molded composite collars.
   f. Collars shall be removable and easily replaceable using manufacturer recommended parts.

23 81 19.13.I. N/A

23 81 19.13.J. Coils

1. Standard Aluminum/Copper Coils: on all models.
   a. Standard evaporator and condenser coils shall have aluminum lanced plate fins mechanically bonded to seamless internally grooved copper tubes with all joints brazed.
   b. Evaporator coils shall be leak tested to 150 psig, pressure tested to 450 psig, and qualified to UL 1995 burst test at 1775 psig.
   c. Condenser coils shall be leak tested to 150 psig, pressure tested to 650 psig, and qualified to UL 1995 burst test at 1980 psig.
2. Optional Pre-coated aluminum fin condenser coils: on all models.
   a. Shall have a durable epoxy-phenolic coating to provide protection in mildly corrosive coastal environments.
   b. Coating shall be applied to the aluminum fin stock prior to the fin stamping process to create an inert barrier between the aluminum fin and copper tube.
   c. Epoxy-phenolic barrier shall minimize galvanic action between dissimilar metals.
3. Optional Copper-fin evaporator and condenser coils: on all models.
   a. Shall be constructed of copper fins mechanically bonded to copper tubes and copper tube sheets.
   b. Galvanized steel tube sheets shall not be acceptable.
   c. A polymer strip shall prevent coil assembly from contacting the sheet metal coil pan to minimize potential for galvanic corrosion between coil and pan.
4. Optional E-coated aluminum-fin evaporator and condenser coils: on all models.
   a. Shall have a flexible epoxy polymer coating uniformly applied to all coil surface areas without material bridging between fins.
   b. Coating process shall ensure complete coil encapsulation of tubes, fins and headers.
   c. Color shall be high gloss black with gloss per ASTM D523-89.
   d. Uniform dry film thickness from 0.8 to 1.2 mil on all surface areas including fin edges.
   e. Superior hardness characteristics of 2H per ASTM D3363-92A and cross-hatch adhesion of 4B-5B per ASTM D3359-93.
   f. Impact resistance shall be up to 160 in.-lb (ASTM D2794-93).
   g. Humidity and water immersion resistance shall be up to minimum 1000 and 250 hours respectively (ASTM D2247-92 and ASTM D870-92).
   h. Corrosion durability shall be confirmed through testing to be no less than 1000 hours salt spray per ASTM B117-90.

23 81 19.13.K. Refrigerant Components

1. Refrigerant circuit shall include the following control, safety, and maintenance features:
   a. Fixed orifice metering system shall prevent mal-distribution of two-phase refrigerant by including multiple fixed orifice devices in each refrigeration circuit. Each orifice is to be optimized to the coil circuit it serves.
   b. Refrigerant filter drier.
   c. Service gauge connections on suction and discharge lines.
   d. Pressure gauge access through a specially designed access port in the top panel of the unit.
   e. Suction line accumulator to provide protection in all operating modes from cooling, heating and reverse cycle switching.
2. There shall be gauge line access port in the top of the rooftop, covered by a black, removable plug.
   a. The plug shall be easy to remove and replace.
   b. When the plug is removed, the gauge access port shall enable maintenance personnel to route their pressure gauge lines.

c. This gauge access port shall facilitate correct and accurate condenser pressure readings by enabling the reading with the compressor access panel on.
d. The plug shall be made of a leak proof, UV-resistant, composite material.

3. Compressors
a. Unit shall use one fully hermetic, scroll compressor for each independent refrigeration circuit.
b. Models shall be available with single compressor designs on 04-07 models, plus additional 2 compressor (stage) models from 08-14 sizes.
c. Compressor motors shall be cooled by refrigerant gas passing through motor windings.
d. Compressors shall be internally protected from high discharge temperature conditions.
e. Compressors shall be protected from an overtemperature and over-amperage conditions by an internal, motor overload device.
f. Compressor shall be factory mounted on rubber grommets.
g. Compressor motors shall have internal line break thermal, current overload and high pressure differential protection.
h. Crankcase heaters shall be utilized on all models (except 04 size) to protect compressor with specific refrigerant charge.

23 81 19.13.L. Filter Section
1. Filters access is specified in the unit cabinet section of this specification.
2. Filters shall be held in place by a pivoting filter tray, facilitating easy removal and installation.
3. Shall consist of factory-installed, low velocity, throw-away 2-in. thick fiberglass filters.
4. Filters shall be standard, commercially available sizes.
5. Only one size filter per unit is allowed.

23 81 19.13.M. Evaporator Fan and Motor
1. Evaporator fan motor:
a. Shall have permanently lubricated bearings.
b. Shall have inherent automatic-reset thermal overload protection or circuit breaker.
c. Shall have a maximum continuous bhp rating for continuous duty operation; no safety factors above that rating shall be required.

2. Electric Drive (Direct Drive) X13 – 5 Speed/Torque Evaporator Fan:
a. Multi speed motor with easy quick adjustment settings.
b. Blower fan shall be double inlet type with forward curved blades.
c. Shall be constructed from steel with a corrosion resistant finish and dynamically balanced.
d. Standard on all 04-06 models.

3. Belt-driven Evaporator Fan:
a. Belt drive shall include an adjustable pitch motor pulley.
b. Shall use sealed, permanently lubricated ball-bearing type.
c. Blower fan shall be double inlet type with forward curved blades.
d. Shall be constructed from steel with a corrosion resistant finish and dynamically balanced.
e. Standard on all 07-14 size models. Optional on all 04-06 3-phase models.

23 81 19.13.N. Condenser Fans and Motors
1. Condenser fan motors:
a. Shall be a totally enclosed motor.
b. Shall use permanently lubricated bearings.
c. Shall have inherent thermal overload protection with an automatic reset feature.
d. Shall use a shaft down design on 04 to 14 models.

2. Condenser Fans:
a. Shall be a direct driven propeller type fan.
b. Shall have aluminum blades riveted to corrosion resistant steel spiders and shall be dynamically balanced.

23 81 19.13.O. Special Features, Options and Accessories
1. Integrated Economizers:
a. Integrated, gear driven parallel modulating blade design type capable of simultaneous economizer and compressor operation.
b. Independent modules for vertical or horizontal return configurations shall be available. Vertical return modules shall be available as a factory-installed option.

c. Damper blades shall be galvanized steel with composite gears. Plastic or composite blades on intake or return shall not be acceptable.
d. Shall include all hardware and controls to provide free cooling with outdoor air when temperature and/or humidity are below setpoints.
e. Shall be equipped with gear driven dampers for both the outdoor ventilation air and the return air for positive air stream control.
f. Shall be equipped with low leakage dampers, not to exceed 2% leakage at 1 in. wg pressure differential.
g. Shall be capable of introducing up to 100% outdoor air.
h. Shall be equipped with a barometric relief damper capable of relieving up to 100% return air.
i. Shall be designed to close damper(s) during loss-of-power situations with spring return built into motor.
j. Dry bulb outdoor air temperature sensor shall be provided as standard. Outdoor air sensor setpoint shall be adjustable and shall range from 40 to 100°F / 4 to 38°C. Additional sensor options shall be available as accessories.
k. The economizer controller shall also provide control of an accessory power exhaust unit function. Factory set at 100%, with a range of 0% to 100%.
l. The economizer shall maintain minimum airflow into the building during occupied period and provide design ventilation rate for full occupancy. A remote potentiometer may be used to override the damper setpoint.
m. Dampers shall be completely closed when the unit is in the unoccupied mode.
n. Economizer controller shall accept a 2-10Vdc CO_2 sensor input for IAQ/DCV control. In this mode, dampers shall modulate the outdoor air damper to provide ventilation based on the sensor input.
o. Compressor lockout sensor shall open at 35°F (2°C) and close at 50°F (10°C).
p. Actuator shall be direct coupled to economizer gear. No linkage arms or control rods shall be acceptable.
q. Economizer controller shall provide indications when in free cooling mode, in the DCV mode, or the exhaust fan contact is closed.
r. Economizer equipped with a mixed air sensor field mounted on the indoor fan blower side plate to control return air and outdoor air dampers to maintain 55°F (13°C) temperature.

2. Two-Position Motorized Damper
   a. Damper shall be a Two-Position Motorized Damper. Damper travel shall be from the full closed position to the field adjustable %-open setpoint.
   b. Damper shall include adjustable damper travel from 25% to 100% (full open).
   c. Damper shall include single or dual blade, gear driven dampers and actuator motor.
   d. Actuator shall be direct coupled to damper gear. No linkage arms or control rods shall be acceptable.
   e. Damper will admit up to 100% outdoor air for applicable rooftop units.
   f. Damper shall close upon indoor (evaporator) fan shutoff and/or loss of power.
   g. The damper actuator shall plug into the rooftop unit's wiring harness plug. No hard wiring shall be required.
   h. Outside air hood shall include aluminum water entrainment filter
3. Manual damper
   a. Manual damper package shall consist of damper, air inlet screen, and rain hood which can be preset to admit up to 50% outdoor air for year round ventilation.
4. Head Pressure Control Package
   a. Controller shall control coil head pressure by condenser fan speed modulation or condenser fan cycling and wind baffles.
   b. Shall consist of solid state control and condenser coil temperature sensor to maintain condensing temperature between 90°F (32°C) and 110°F (43°C) at outdoor ambient temperatures down to -20°F (-29°C).
5. Condenser Coil Hail Guard Assembly
   a. Shall protect against damage from hail.
   b. Shall be louvered design.
6. Unit Mounted, Non-Fused Disconnect Switch:
   a. Switch shall be factory-installed, internally mounted.
   b. National Electric Code (NEC) and UL approved non-fused switch shall provide unit power shutoff.
   c. Shall be accessible from outside the unit
   d. Shall provide local shutdown and lockout capability.
7. Convenience Outlet:
   a. Powered convenience outlet.
      (1.) Outlet shall be powered from main line power to the rooftop unit.

(2.) Outlet shall be powered from line side or load side of disconnect by installing contractor, as required by code. If outlet is powered from load side of disconnect, unit electrical ratings shall be UL certified and rated for additional outlet amperage.

(3.) Outlet shall be factory-installed and internally mounted with easily accessible 115-v female receptacle.

(4.) Outlet shall include 15 amp GFI receptacles with independent fuse protection.

(5.) Voltage required to operate convenience outlet shall be provided by a factory-installed step down transformer.

(6.) Outlet shall be accessible from outside the unit.

b. Non-Powered convenience outlet.

(1.) Outlet shall be powered from a separate 115-120v power source.

(2.) A transformer shall not be included.

(3.) Outlet shall be factory-installed and internally mounted with easily accessible 115-v female receptacle.

(4.) Outlet shall include 15 amp GFI receptacles.

(5.) Outlet shall be accessible from outside the unit.

8. Thru-the-Base Connectors:

a. Kits shall provide connectors to permit electrical connections to be brought to the unit through the unit basepan.

b. Minimum of three connection locations per unit.

9. Propeller Power Exhaust:

a. Power exhaust shall be used in conjunction with an integrated economizer.

b. Independent modules for vertical or horizontal return configurations shall be available.

c. Horizontal power exhaust shall be mounted in return ductwork.

d. Power exhaust shall be controlled by economizer controller operation. Exhaust fans shall be energized when dampers open past the 0-100% adjustable setpoint on the economizer control.

10. Roof Curbs (Vertical):

a. Full perimeter roof curb with exhaust capability providing separate air streams for energy recovery from the exhaust air without supply air contamination.

b. Formed galvanized steel with wood nailer strip and shall be capable of supporting entire unit weight.

c. Permits installation and securing of ductwork to curb prior to mounting unit on the curb.

11. High Static Indoor Fan Motor(s) and Drive(s) (04-14):

a. High static motor(s) and drive(s) shall be factory-installed to provide additional performance range.

12. Thru-the-Bottom Utility Connectors:

a. Kit shall provide connectors to permit gas and electrical connections to be brought to the unit through the basepan.

13. Outdoor Air Enthalpy Sensor:

a. The outdoor air enthalpy sensor shall be used to provide single enthalpy control. When used in conjunction with a return air enthalpy sensor, the unit will provide differential enthalpy control. The sensor allows the unit to determine if outside air is suitable for free cooling.

14. Return Air Enthalpy Sensor:

a. The return air enthalpy sensor shall be used in conjunction with an outdoor air enthalpy sensor to provide differential enthalpy control.

15. Indoor Air Quality (CO_2) Sensor:

a. Shall be able to provide demand ventilation indoor air quality (IAQ) control.

b. The IAQ sensor shall be available in duct mount, wall mount, or wall mount with LED display. The setpoint shall have adjustment capability.

16. Smoke detectors (Factory-Installed Only):

a. Shall be a Four-Wire Controller and Detector.

b. Shall be environmental compensated with differential sensing for reliable, stable, and drift-free sensitivity.

c. Shall use magnet activated test/reset sensor switches.

d. Shall have tool-less connection terminal access.

e. Shall have a recessed momentary switch for testing and resetting the detector.

f. Controller shall include:

(1.) One set of normally open alarm initiation contacts for connection to an initiating device circuit on a fire alarm control panel.

(2.) Two Form-C auxiliary alarm relays for interface with rooftop unit or other equipment.

(3.) One Form-C supervision (trouble) relay to control the operation of the Trouble LED on a remote test/reset station.

(4.) Capable of direct connection to two individual detector modules.

(5.) Can be wired to up to 14 other duct smoke detectors for multiple fan shutdown applications.

17. Time Guard

a. Shall prevent compressor short cycling by providing a 5-minute delay (±2 minutes) before restarting a compressor after shutdown for any reason.

b. One device shall be required per compressor.

18. Electric Heat:

a. Heating Section

(1.) Heater element open coil resistance wire, nickel-chrome alloy, 0.29 inches inside diameter, strung through ceramic insulators mounted on metal frame. Coil ends are staked and welded to terminal screw slots.

(2.) Heater assemblies are provided with integral fusing for protection of internal heater circuits not exceeding 48 amps each. Auto reset thermo limit controls, magnetic heater contactors (24V coil) and terminal block all mounted in electric heater control box (minimum 18 ga galvanized steel) attached to end of heater assembly.

Copyright 2010 Carrier Corp. • 7310 W. Morris St. • Indianapolis, IN 46231
Printed in U.S.A. Edition Date: 04/10 **Catalog No: 50TCQ–03PD**

Manufacturer reserves the right to change, at any time, specifications and designs without notice and without obligations.
Replaces: 50TCQ–02PD