58SU0A
4−WAY MULTIPOISE
INDUCED−COMBUSTION ULTRA LOW NOx
80% GAS FURNACE
Input Capacities: 60,000 & 80,000 Btuh

Carrier
turn to the experts

Product Data

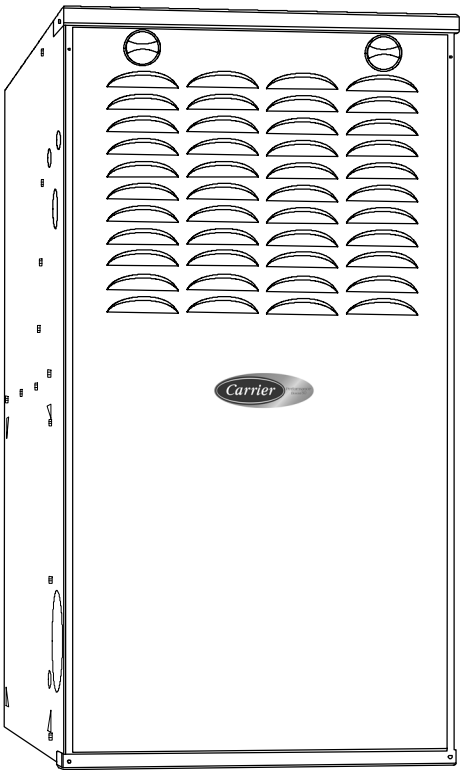

A180228

THE CARRIER 80% GAS FURNACE

The 58SU0 4-way Multipoise Gas Furnaces offer features not found in other single-stage 80% gas furnaces. These models meet the California maximum oxides of nitrogen (NOx) emissions requirement of 14 nanograms/joule or less for use in California Air Quality Management Districts requiring 14 nanograms/joule or less emissions.

The gas furnace control system provides fault code storage in the event of power outages. Applications are easy with 4-way multipoise design, 6 different venting options, and a design for easy service access.

STANDARD FEATURES

Efficiency

- ECM blower motor included
- 80% AFUE
- 60k and 80k Btu/h capacities

Technology

- Single-stage gas valve
- Discrete-tapped blower motor
- Pilot free, hot surface ignition
- Variable speed inducer motor
- Stainless steel heat exchanger

Performance

- Insulated blower compartment for quiet operation
- Draft Safeguard™ switch to ensure proper furnace venting
- Hybrid Heat® Dual Fuel compatible
- Ultra-low Nox emissions - 14 nanograms/joule

Design and Installation

- Versatile venting for tight-fit applications
- Noise elimination combustion system, inner door for tighter sealing
- Four-position furnace: Upflow, Horizontal Right, Horizontal Left, Downflow (6 different vent options)
- Cabinet air leakage less than 2.0% at 1.0 in. W.C. and cabinet air leakage less than 1.4% at 0.5 in. W.C. when tested in accordance with ASHRAI standard 193.

Certified System ISO 9001 QMI-SAI Global

AHRI CERTIFIED™ www.ahridirectory.org

Use of the AHRI Certified TM Mark indicates a manufacturer's participation in the program. For verification of certification for individual products, go to www.ahridirectory.org.

DESIGN CERTIFIED

EASE OF INSTALLATION FACTORY AUTHORIZED PARTS ENGINEERED QUALITY

1-2 Gas Furnace 58	3 Stages S	4 Tier U	5 Min. AFUE/NOx 0	6 Major Series A	7, 8, 9 Capacity. 060	10 Motor E	11, 12 Width 17	13 Voltage (1-phase) 1	14 Minor Series 1	15, 16 Airflow 16
58 = 80% 59 = 90%	C = Single Stage Comm. M = Modulating S = Single Stage T = Two Stage	B = Base C = Comfort E = Export N = Infinity P = Performance U = Ultra Low Nox	0 = 80% 1 = 80% Low Nox 2 = 92% 5 = 95% 6 = 96% 7 = 97% 8 = 98%	A B C	026 = 26,000 BTU 040 = 40,000 BTU 060 = 60,000 BTU — 155 = 155,000 BTU	C = Constant Airflow VS E= Discrete Tapped P = PSC V = Variable Speed PWM	14 - 14.2" 17 - 17.5" 21 - 21.0"	1 = 110V/60Hz 2 = 230V/50Hz	1 2 3 —	08 = 800 CFM 10 = 1000 CFM 12 =1200 CFM 14 = 1400 CFM 16 = 1600 CFM 20 = 2000 CFM 22 = 2200 CFM

DIMENSIONS

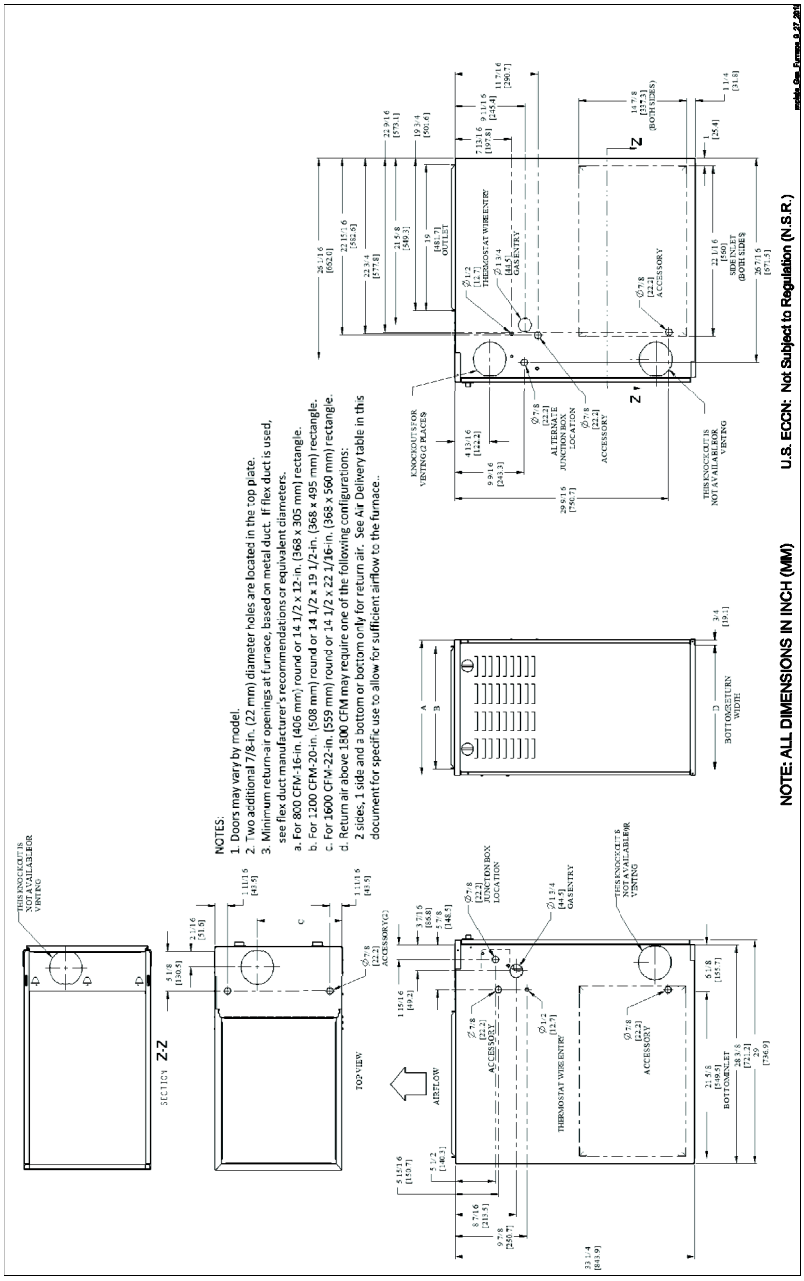

A180207

FURNACE SIZE	A CABINET WIDTH	B OUTLET WIDTH	C TOP FLUE COLLAR	D BOTTOM INLET WIDTH	VENT CONNECTION SIZE	SHIP WT. LB. (KG)
58SU0A060E17– –16	17–1/2 (445)	15–7/8 (403)	11–9/16 (294)	16 (406)	4 (102)	126 (57)
58SU0A080E21– –20	21 (533)	19–3/8 (492)	13–5/16 (338)	19–1/2 (495)	4 (102)	140 (64)

WARNING

FIRE, EXPLOSION, ASPHYXIATION HAZARD

Improper adjustment, alteration, service, maintenance, or installation can cause serious injury or death.

Read and follow instructions and precautions in User's Information Manual provided with this furnace. Installation and service must be performed by a qualified service agency or the gas supplier.

⚠ CAUTION

Check entire gas assembly for leaks after lighting this appliance.

INSTALLATION

1. This furnace must be installed in accordance with the manufacturer's instructions and local codes. In the absence of local codes, follow the National Fuel Gas Code ANSI Z223.1 / NFPA54 or CSA B-149. 1 Gas Installation Code.
2. This furnace must be installed so there are provisions for combustion and ventilation air. See manufacturer's installation information provided with this appliance.

OPERATION

This furnace is equipped with manual reset limit switch(es) in burner compartment to protect against overheat conditions that can result from inadequate combustion air supply or blocked vent conditions.

1. Do not bypass limit switches.
2. If a limit opens, call a quallified serviceman to correct the condition and reset limit switch.

INSTALLATION

MINIMUM INCHES CLEARANCE TO COMBUSTIBLE CONSTRUCTION

This forced air furnace is equipped for use with natural gas at altitudes 0 - 2,000 ft. (0-610m).

Refer to furnace installation manual for suitability and operation above 2,000 ft. (610m).

If furnace is convertible, see rating plate for manufacturer supplied accessory kits that shall be used to convert to propane gas use.

This furnace is for indoor installation in a building constructed on site.

This furnace may be installed on combustible flooring in alcove or closet at minimum clearance as indicated by the diagram from combustible material.

This furnace may be used with a Type B-1 vent and may be vented in common with other gas fired appliance.

This furnace is approved for UPFLOW, DOWNFLOW, and HORIZONTAL installations.

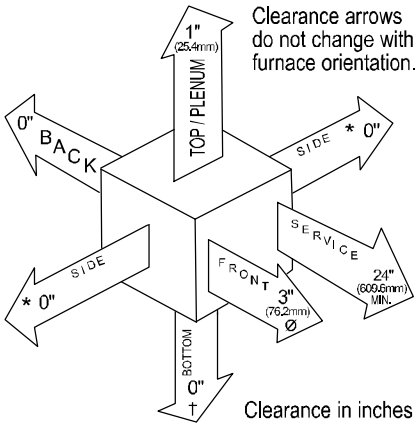

Vent Clearance to combustibles:
For Single Wall vents 6 inches **(15.5 cm)**
For Type B-1 vent type 1 inch **(2.5 cm)**

MINIMUM INCHES CLEARANCE TO COMBUSTIBLE CONSTRUCTION

DOWNFLOW POSITIONS:

† **Installation on non-combutible floors only.**
For installation on combustible flooring only when installed on special base, Part No. KGASB0201ALL or NAHA01101SB, Coil Assembly, Part No. CAR, CAP, CNPV, CNRV, END4X, ENW4X, WENC, WTNC, WENW or WTNW.

Ø 18 inches front clearance required for alcove.

* Indicates supply or return sides when furnace is in the horizontal position. Line contact only permissible between lines formed by intersections of the Top and two Sides of the furnace jacket, and building joists, studs or framing.

A180239

SPECIFICATIONS

UNIT SIZE		060 – 16	080 – 20
RATINGS AND PERFORMANCE			
Input Btuh*		60,000	80,000
Output Capacity (Btuh)†		48,000	64,000
AFUE†		80.0	80.0
Certified Temperature Rise Range – °F (°C)		30 (16) – 60 (33)	25 (14) – 55 (30)
External Static Pressure	Heating	.15	.12
	Cooling	.5	.5
Airflow CFM‡	Heating	1020	1330
	Cooling	1545	1990
ELECTRICAL			
Unit Volts – Hertz – Phase		115-60-1	
Operating Voltage Range	Min-Max	104-127	
Maximum Unit Amps		10.6	13.3
Unit Ampacity		13.9	17.3
Maximum Wire Length – Measure one way in Ft (M)		26 (8)	33 (10)
Minimum Wire Size		14	12
Maximum Fuse or Ckt Bkr Size (Amps)**		15	20
Transformer (24v)		40 VA	
External Control	Heating	12 VA	
Power Available	Cooling	35 VA	
Air Conditioning Blower Relay		Standard	
CONTROLS			
Limit Control		SPST	
Heating Blower Control		Solid – State Time Operation	
Gas Connection Size		1/2-in. NPT	
GAS CONTROLS			
Gas Valve (Redundant)	Mfr.	White Rodgers	
	Min. inlet pressure (In. W.C.)	3.5 Natural Gas	
	Max. inlet pressure (In. W.C.)	13.6 Natural Gas	
Ignition Device		Hot Surface Igniter	
Factory-installed orifice		#18	#10
BLOWER DATA			
Direct-Drive Motor HP (DTCT)		3/4	1
Motor Full Load Amps		8.8	11.5
RPM (Nominal)-Speeds		1050	1050
Blower Wheel Diameter x Width – In. (mm)		11 (279) x 8 (203)	11 (279) x 11 (279)

* Gas input ratings are certified for elevations to 2000 ft. (610 M). Refer to National Fuel Gas Code NFPA 54/ANSI Z223.1 Table F.4 or furnace installation instructions.

† Capacity in accordance with U.S. Government DOE test procedures.

‡ Airflow shown is for bottom only return-air supply for the as-shipped speed tap. For air delivery above 1800 CFM, see Air Delivery table for other options. A filter is required for each return-air supply. An airflow reduction of up to 7 percent may occur when using the factory-specified 4-5/16 in. wide, high efficiency media filter.

** Time – delay type is recommended.

ICS Isolated Combustion System

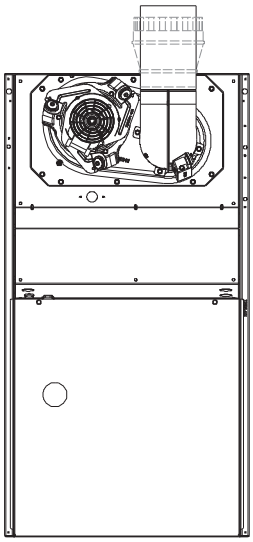

SEE NOTES: 1,2,4,7,8,9
on the page following
these figures

A03208

Fig. 1 - Upflow Application-Vent Elbow Up

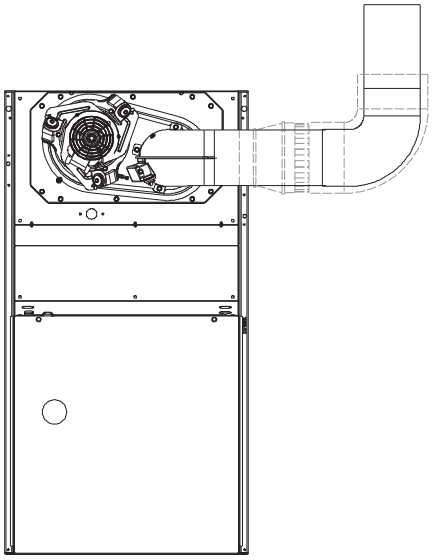

SEE NOTES: 1,2,3,4,7,8,9
on the pages following
these figures

A03209

Fig. 2 - Upflow Application-Vent Elbow Right

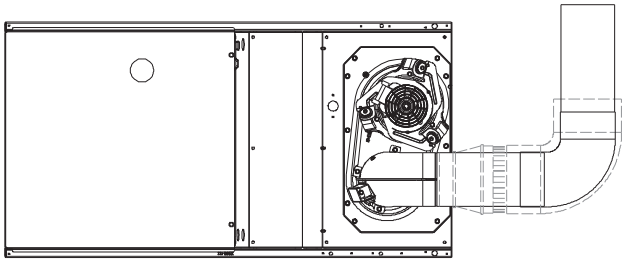

SEE NOTES: 1,2,4,7,8,9 on the page
following these figures

A03214

Fig. 3 - Horizontal Right Application-Vent Elbow Right

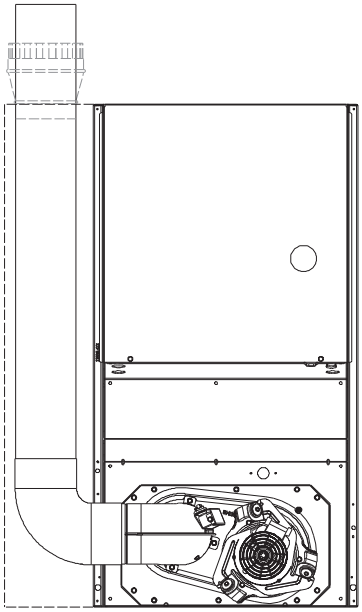

SEE NOTES: 1,2,4,5,6,7,8,9
on the page following these figures

A03207

Fig. 4 - Downflow Application-Vent Elbow Left then Up

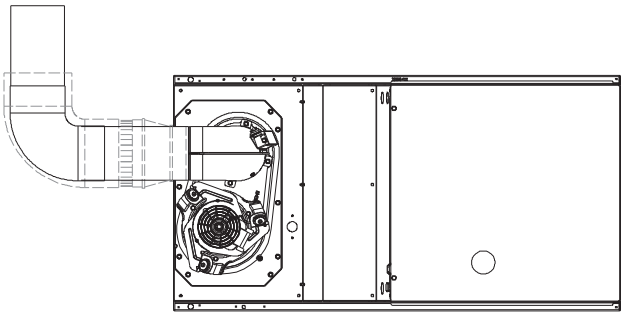

SEE NOTES: 1,2,4,7,8,9 on the page
following these figures

A03213

Fig. 5 - Horizontal Left Application-Vent Elbow Left

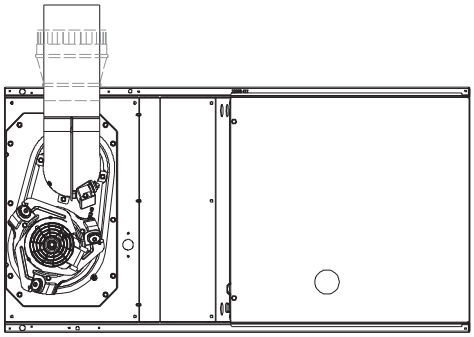

SEE NOTES: 1,2,4,5,7,8,9 on the page
following these figures

A03215

Fig. 6 - Horizontal Left Application-Vent Elbow Up

Venting Notes

1. For common vent, vent connector sizing and vent material: United States, latest edition of the National Fuel Gas Code (NFGC), NFPA54/ANSI Z223.1.
2. Immediately increase to 5-in. (127 mm) vent connector outside furnace casing when 5-in. (127 mm) vent connector required, refer to Note 1.
3. Side outlet vent for upflow and downflow installations must use Type B vent immediately after exiting the furnace, except when accessory Downflow Vent Guard is used in downflow position.
4. Type B vent where required, refer to Note 1.
5. 4-in. (102 mm) single wall vent must be used inside furnace casing and the Downflow Vent Guard Kit.
6. Accessory Downflow Vent Guard Kit required in downflow installations with bottom vent configuration.
7. Secure vent connector to furnace elbow with (2) corrosion-resistant sheet metal screws, space approximately 180° apart.
8. Secure all other single wall vent connector joints with (3) corrosion-resistant screws spaced approximately 120° apart. Secure Type B vent connectors per vent connector manufacturer's recommendations.

ACCESSORIES

DESCRIPTION	PART NO.	060−16	080−20
Media Filter Cabinet	FILCABXL0016	X	
	FILCABXL0020		X
Cartridge Media Filter	FILCCCAR0016	X	
	FILCCCAR0020		X
EZ Flex Media Filter with End Caps	EXPXXUNV0016	X	
	EXPXXUNV0020		X
Replacement EZ Flex Filter Media	EXPXXFIL0016	X	
	EXPXXFIL0020		X
	KGBFR0501B17	X	
	KGBFR0601B21		X
Unframed Filter 3/4−in. (19 mm)	KGAWF1306UFR	X	
	KGAWF1406UFR		X
Flue Extension	KGAFE0112UPH	X	X
Combustible Floor Base	KGASB0201ALL	X	X
Downflow Vent Guard	KGBVG0101DFG	X	X

X − Accessory

ACCESSORIES	
AIR PURIFIER	Models GAPAAXCC1625, GAPAAXCC2025
MECHANICAL AIR CLEANER	Models EZXCAB, FILCAB
HUMIDIFIER	Model HUM
HEAT RECOVERY VENTILATOR	Model HRV
ENERGY RECOVERY VENTILATOR	Model ERV
UV LIGHTS	Model UVL
CARBON MONOXIDE ALARM	COALMCCNRB01−A10 (10 Pack, plugs in wall)
THERMOSTAT − NON−PROGRAMMABLE	For use with 1−speed Air Conditioner − deg. F/C, Auto Changeover − TP−NAC, TC−NAC
	For use with 1−speed Heat Pump − deg. F/C, Auto Changeover − TP−NHP, TC−NHP*
THERMOSTAT − PROGRAMMABLE	For use with 1−speed Air Conditioner − deg. F/C, Auto Changeover, 7−Day Programmable − TP−PAC
	For use with 1−speed Heat Pump − deg. F/C, Auto Changeover, 7−Day Programmable − TP−PHP*
	For use with 1−speed Air Conditioner − deg. F/C, 5−2 Day Programmable − TP−PAC
ZONING CONTROL	Comfort Series™ Three−Zone Kit − ZONECC3ZAC01, ZONECC3ZHP01
	2−Performance™ Series ComfortZone™ Zoning/Temperature and Humidity Control − ZONECC2KIT01−B
	4−Performance™ Series ComfortZone™ Zoning/Temperature and Humidity Control − ZONECC4KIT01−B
	8−Performance™ Series ComfortZone™ Zoning/Temperature and Humidity Control − ZONECC8KIT01−B

TYPICAL WIRING SCHEMATIC

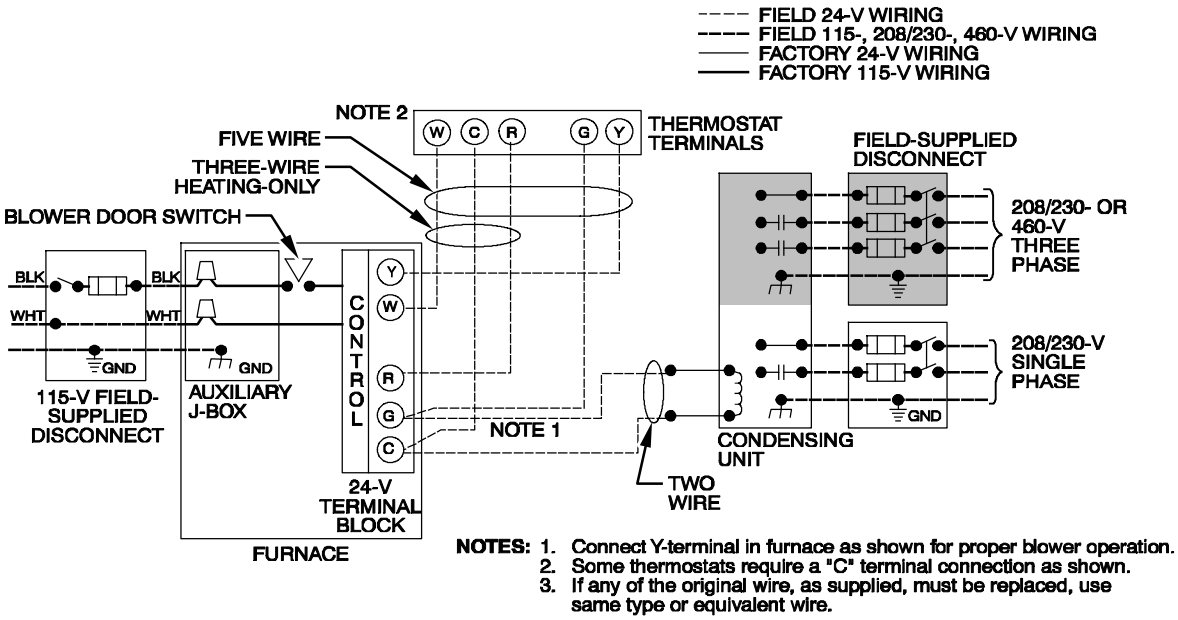

Representative drawing only, some models may vary.

A180241

AIR DELIVERY - CFM (WITH FILTER)

Furnace	Wire Lead Color[2]	Function	Test Airflow Delivery @ Various External Static Pressures									
			External Static Pressure (IN. W.C.)									
			0.1	**0.2**	**0.3**	**0.4**	**0.5**	**0.6**	**0.7**	**0.8**	**0.9**	**1.0**
060-16	**Gray**	Cooling. Do not use for heating.	1720	1680	1635	1585	1545	1505	1455	1405	1355	1305
	Yellow	Alt Cooling or alt Heating	1470	1425	1385	1335	1290	1245	1200	1160	1110	1060
	Orange	Alt Cooling or alt Heating	1305	1255	1215	1160	1115	1070	1025	975	925	870
	Blue	Heating or alt cooling	1040	940	890	835	790	740	675	620	565	525
	Red	Alt Cooling or alt Heating	1135	1090	1035	985	940	895	845	790	730	675
			0.1	**0.2**	**0.3**	**0.4**	**0.5**	**0.6**	**0.7**	**0.8**	**0.9**	**1.0**
080-20	**Gray**	Cooling. Do not use for heating.	2185	2135	2085	2035	1990	1935	1880	1825	1770	1715
	Yellow	Alt Cooling or alt Heating	1885	1830	1780	1730	1675	1625	1575	1520	1470	1420
	Orange	Alt Cooling or alt Heating	1565	1500	1440	1385	1330	1275	1220	1170	1115	1055
	Blue	Heating or alt cooling	1365	1295	1230	1165	1100	1045	985	925	845	780
	Red	Alt Heating or alt cooling	1205	1045	965	895	815	745	650	595	540	480

1. A filter is required for each return−air inlet. Airflow performance included 3/4−in. (19 mm) washable filter media such as contained in factory−authorized accessory filter rack. To determine airflow performance without this filter, assume an additional 0.1−in. W.C. available external static pressure.
2. **Adjust the blower speed tabs as necessary for the proper air temperature rise for each installation.**

GUIDE SPECIFICATIONS

Gas Furnace

58SUA

GENERAL

System Description

Furnish a _____ fixed capacity gas-fired furnace for use with natural gas; furnish cold air return plenum.

Quality Assurance

Unit will be designed, tested and constructed to the current ANSI Z 21.47/CSA 2.3 design standard for gas-fired central furnaces.

Unit will be 3rd party certified by CSA to the current ANSI Z 21.47/CSA 2.3 design standard for gas-fired central furnaces.

Unit will carry the CSA Blue Star® label.

Unit efficiency testing will be performed per the current DOE test procedure as listed in the Federal Register.

Unit will be certified for capacity and efficiency and listed in the latest AHRI Consumer's Directory of Certified Efficiency Ratings.

Unit will carry the current Federal Trade Commission Energy Guide efficiency label.

Delivery, Storage and Handling

Unit shall be shipped as single package only and is stored and handled per unit manufacturer's recommendations.

Warranty (for inclusion by specifying engineer)

U.S. only. Warranty certificate available upon request.

PRODUCTS

Equipment

Components shall include: slow-opening gas valve to reduce ignition noise, regulate gas flow, with electric switch gas shut-off; flame proving sensor, hot surface igniter, transducer, burner thermal switch, blower and inducer assembly, 40va transformer; low-voltage (heating) (heating/ cooling) thermostat.

Blower Wheel and Blower Motor

Galvanized blower wheel shall be centrifugal type, statically and dynamically balanced. Blower motor of ECM type shall be permanently lubricated with sealed bearings, of _____hp, and shall be multiple-speed direct drive. Blower motor shall be soft mounted to the blower scroll to reduce vibration transmission.

Filters

Furnace may have reusable-type filters. Filter shall be _____ in (x) _____in. (mm). An accessory high-efficiency media filter is available as an option. _____ Media Filter.

Casing

Casing shall be of .030 in. (.76 mm) thickness minimum, pre-painted steel.

Draft Safeguard Switch

Draft Safeguard Switch (blocked vent safeguard) shall be factory installed to reduce the possibility of vent gas infiltration due to a blocked or restricted vent pipe.

Controls

Control shall include a micro-processor based integrated electronic control board with troubleshooting codes displayed via enhanced flashing LED diagnostic light on the control, a self-test feature that checks all major functions of the furnace, and a replaceable automotive-type circuit protection fuse. Multiple operational settings available including separate blower speeds for heating and cooling.

Operating Characteristics

Heating Capacity shall be _____ Btuh input; _____ Btuh output capacity.

Fuel Gas Efficiency shall be 80% AFUE.

Air delivery shall be _____ CFM minimum at 0.50 In. W.C. external static pressure.

Dimensions shall be: depth _____ in.; width _____ in; height_____in. (mm) (casing only). Height shall be_____in. (mm) with A/C coil and _____in. (mm) overall with plenum.

Electrical Requirements

Electrical supply shall be 115 volts, 60 Hz, single-phase (nominal). Minimum wire size shall be_____AWG; maximum fuse size or circuit breaker shall be _____Amps.

Special Features

Refer to section of the product data sheet identifying accessories and descriptions for specific features and available enhancements.

Copyright 2018 Carrier Corp. • 7310 W. Morris St. • Indianapolis, IN 46231
Edition Date: 10/18

Catalog No: 58SU0A–01PD

Manufacturer reserves the right to change, at any time, specifications and designs without notice and without obligations.

Replaces: NEW