# 58WAV, 58ZAV
# Induced-Combustion Furnaces

# Service and Maintenance Instructions
## For Sizes 045-155, Series 121

**NOTE:** Read the entire instruction manual before performing any service or maintenance.

This symbol → indicates a change since the last issue.

Index Page


SAFETY CONSIDERATIONS....1-2
ELECTROSTATIC DISCHARGE (ESD) PRECAUTIONS PROCEDURE....2
CARE AND MAINTENANCE....2-11
- Air Filter Arrangement....2-3
- Blower Motor and Wheel....3-4
- Cleaning Heat Exchanger....4-5
- Electrical Controls and Wiring....6
- Troubleshooting....6-11
- Unit Wiring Diagram....8
- Service Label....9
- Troubleshooting Guide....10-11


### SAFETY CONSIDERATIONS

Installing and servicing heating equipment can be hazardous due to gas and electrical components. Only trained and qualified personnel should install, repair, or service heating equipment.

Untrained personnel can perform basic maintenance functions such as cleaning and replacing air filters. All other operations must be performed by trained service personnel. When working on heating equipment, observe precautions in the literature, on tags, and on labels attached to or shipped with the unit and other safety precautions that may apply.

Follow all safety codes. In the United States, follow all safety codes including the National Fuel Gas Code (NFGC) NFPA No. 54-1992/ANSI Z223.1-1992. In Canada, refer to the current edition of the National Standard of Canada CAN/CGA-B149.1- and .2-M91 Natural Gas and Propane Installation Codes (NSC-NGPIC). Wear safety glasses and work gloves. Have fire extinguisher available during start-up and adjustment procedures and service calls.

Recognize safety information. This is the safety-alert symbol ⚠ . When you see this symbol on the furnace and in instructions or manuals, be alert to the potential for personal injury.

Understand the signal words DANGER, WARNING, and CAUTION. These words are used with the safety-alert symbol. DANGER identifies the most serious hazards which **will** result in severe personal injury or death. WARNING signifies a hazard which **could** result in personal injury or death. CAUTION is used to identify unsafe practices which **would** result in minor personal injury or product and property damage. NOTE is used to highlight suggestions which **will** result in enhanced installation, reliability, or operation.

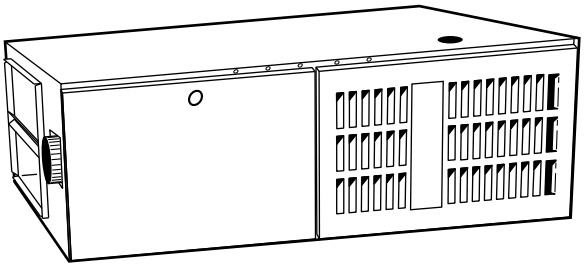

A94087

**Fig. 1—Model 58ZAV Horizontal**

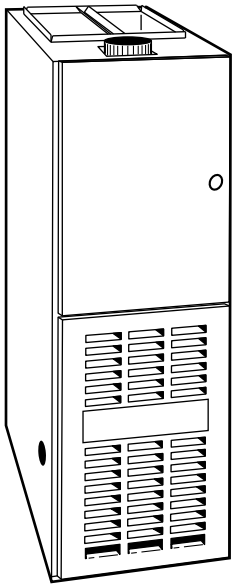

A94086

**Fig. 2—Model 58ZAV Downflow**

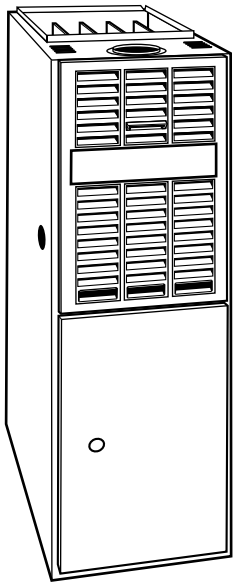

A94085

**Fig. 3—Model 58WAV Upflow**


**Manufacturer reserves the right to discontinue, or change at any time, specifications or designs without notice and without incurring obligations.**

**⚠ WARNING**

The ability to properly perform maintenance on this equipment requires certain expertise, mechanical skills, tools, and equipment. If you do not possess these, do not attempt to perform any maintenance on this equipment other than those procedures recommended in the User's Manual. FAILURE TO FOLLOW THIS WARNING COULD RESULT IN POSSIBLE DAMAGE TO THIS EQUIPMENT, SERIOUS PERSONAL INJURY, OR DEATH.

### → ELECTROSTATIC DISCHARGE (ESD) PRECAUTIONS PROCEDURE

**⚠ CAUTION**

Electrostatic discharge can affect electronic components. Take precautions during furnace installation and servicing to protect the furnace electronic control. Precautions will prevent electrostatic discharges from personnel and hand tools which are held during the procedure. These precautions will help to avoid exposing the control to electrostatic discharge by putting the furnace, the control, and the person at the same electrostatic potential.

1. Disconnect all power to the furnace. DO NOT TOUCH THE CONTROL OR **ANY** WIRE CONNECTED TO THE CONTROL PRIOR TO DISCHARGING YOUR BODY'S ELECTROSTATIC CHARGE TO GROUND.
2. Firmly touch a clean, unpainted, metal surface of the furnace chassis which is close to the control. Tools held in a person's hand during grounding will be satisfactorily discharged.
3. After touching the chassis you may proceed to service the control or connecting wires as long as you do nothing that recharges your body with static electricity (for example; DO NOT move or shuffle your feet, DO NOT touch ungrounded objects, etc.).
4. If you touch ungrounded objects (recharge your body with static electricity), firmly touch furnace again before touching control or wires.
5. Use this procedure for installed and uninstalled (ungrounded) furnaces.
6. Before removing a new control from its container, discharge your body's electrostatic charge to ground to protect the control from damage. If the control is to be installed in a furnace, follow items 1 through 5 before bringing the control or yourself into contact with the furnace. Put all used AND new controls into containers before touching ungrounded objects.
7. An ESD service kit (available from commercial sources) may also be used to prevent ESD damage.

## CARE AND MAINTENANCE

For continuing high performance and to minimize possible equipment failure, it is essential that periodic maintenance be performed on this equipment. Consult your local dealer as to the proper frequency of maintenance and the availability of a maintenance contract.

**⚠ WARNING**

Never store anything on, near, or in contact with the furnace, such as:

1. Spray or aerosol cans, rags, brooms, dust mops, vacuum cleaners, or other cleaning tools.
2. Soap powders, bleaches, waxes or other cleaning compounds, plastic or plastic containers, gasoline, kerosene, cigarette lighter fluid, dry cleaning fluids, or other volatile fluids.
3. Paint thinners and other painting compounds, paper bags or other paper products.

A failure to follow this warning could result in corrosion of the heat exchanger, fire, personal injury, or death.

**⚠ WARNING**

Turn off the gas and electrical supplies to the unit before performing any maintenance or service. Follow the operating instructions on label attached to furnace. A failure to follow this warning could result in personal injury.

The minimum maintenance that should be performed on this equipment is as follows:

1. Check and clean air filter each month or more frequently if required. Replace if torn.
2. Check blower motor and wheel for cleanliness each heating and cooling season. Clean and lubricate as necessary.
3. Check electrical connections for tightness and controls for proper operation each heating season. Service as necessary.

**⚠ CAUTION**

As with any mechanical equipment, personal injury can result from sharp metal edges, etc., therefore, be careful when removing parts.

AIR FILTER ARRANGEMENT

The air filter arrangement may vary depending on the application. Refer to Table 1 or 2 for filter size information.

**Table 1—Filter Size Information for Downflow/Horizontal Furnaces (In.)**

| FURNACE CASING WIDTH | FILTER QUANTITY AND SIZE | FILTER TYPE |
|---|---|---|
| **14-3/16** | (2) 14 X 20 X 1 | Cleanable |
| **17-1/2** | (2) 14 X 20 X 1 | Cleanable |
| **21** | (2) 16 X 20 X 1 | Cleanable |
| **24-1/2** | (2) 16 X 20 X 1 | Cleanable |

**Table 2—Filter Size Information for Upflow Furnaces (In.)**

| FURNACE CASING WIDTH | FILTER QUANTITY AND SIZE | | FILTER TYPE |
|---|---|---|---|
| | Side Return | Bottom Return | |
| **14-3/16** | (1) 16 X 25 X 1* | (1) 14 X 25 X 1 | Cleanable |
| **17-1/2** | (1) 16 X 25 X 1* | (1) 16 X 25 X 1 | Cleanable |
| **21** | (1) 16 X 25 X 1 | (1) 20 X 25 X 1* | Cleanable |
| **24-1/2** | (2) 16 X 25 X 1* | (1) 24 X 25 X 1 | Cleanable |

* Factory-provided with the furnace. Filters may be field modified as required by cutting and folding the frame as indicated on the filter.

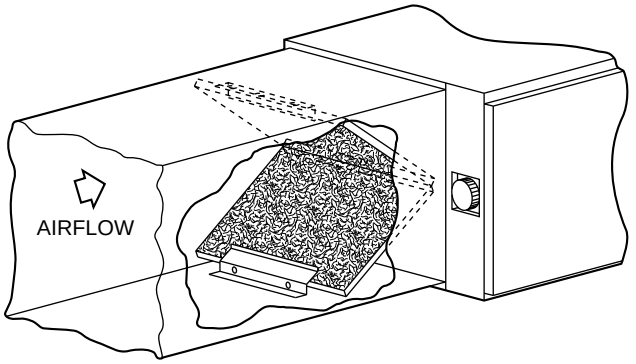


A94307

**Fig. 4—Horizontal Filter Arrangement**

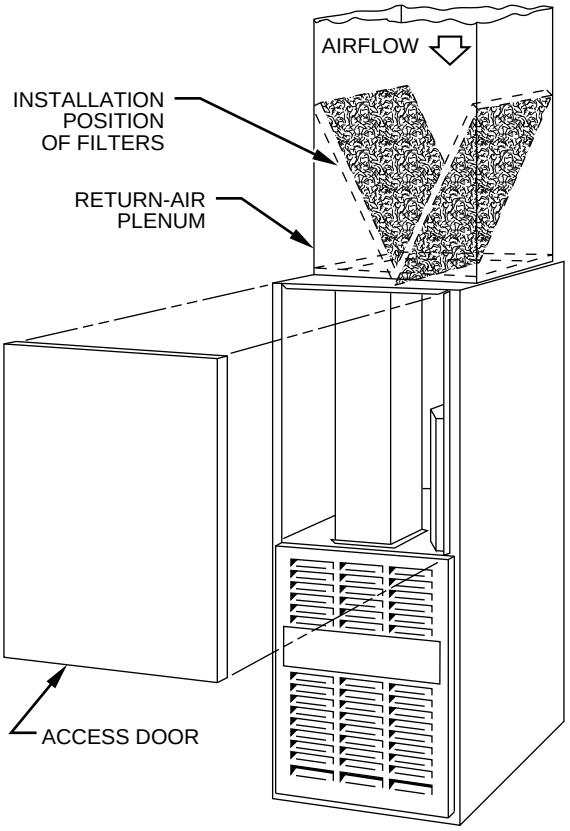


A88486

**Fig. 5—Downflow Filter Arrangement**

**⚠ WARNING**

Never operate unit without a filter or with filter access door removed. A failure to follow this warning could result in fire, personal injury, or death.

1. Downflow/Horizontal

   Each furnace requires 2 filters which are installed in the return-air duct. (See Fig. 4 and 5.) To remove filters for cleaning or replacement, proceed as follows:

   a. Disconnect electrical power before removing blower access door.

   b. Remove 2 screws from front of door and remove blower access door.

   c. Reach up behind top plate, tilt filters toward center of return-air plenum, remove filters, and clean as needed. Replace if torn.

   d. Furnaces are equipped with permanent, washable filters. Clean filters with tap water. Spray water through filter in opposite direction of airflow.

   e. Rinse and let dry. Oiling or coating of filters is not recommended or required.

   f. Reinstall filters.

   g. Replace blower access door.

   h. Restore electrical power to furnace.

2. Upflow

   Each furnace requires 1 or 2 filters which are installed in the blower compartment. (See Fig. 6.) To remove filters for cleaning or replacement, proceed as follows:

   a. Disconnect electrical power before removing access doors.

   b. Remove blower and control access doors.

   c. Release filter retainer from clip at front of furnace casing. (See Fig. 6.) For side return, clips may be used on either or both sides of the furnace.

   d. Slide filter(s) out.

   e. Furnaces are equipped with permanent, washable filters. Clean filters with tap water. Spray water through filter in opposite direction of airflow.

   f. Rinse and let dry. Oiling or coating of filter is not recommended or required.

   g. Reinstall filter(s).

   h. Replace blower and control access doors.

   i. Restore electrical power to furnace.

BLOWER MOTOR AND WHEEL

For long life, economy, and high efficiency, clean accumulated dirt and grease from the blower wheel and motor annually.

**The following steps should be performed by a qualified service technician.**

Some motors have prelubricated sealed bearings and require no lubrication. These motors can be identified by the absence of oil ports on each end of the motor. For those motors with oil ports, lubricate motor every 5 years if motor is used on intermittent operation (thermostat FAN switch in AUTO position), or every 2 years if motor is in continuous operation (thermostat FAN switch in ON position).

**NOTE:** Remember to disconnect the electrical supply before removing access doors.

Clean and lubricate as follows:

1. Remove 2 screws from blower access door (downflow/horizontal furnace only) and remove blower access door.
2. Remove vent pipe enclosure (downflow/horizontal furnace only) and disconnect short piece of vent pipe from relief box.
3. Disconnect wires from auxiliary limit on blower housing (downflow/horizontal furnace only).
4. Remove control.
5. Disconnect electrical leads from control. (See Fig. 6 or 7.) Note location of wires for reassembly.
6. Remove screws holding blower assembly to blower deck and slide blower assembly out of furnace.
7. Loosen screw in strap holding motor capacitor to blower housing and slide capacitor out from under strap.
8. Mark blower wheel, motor, and motor support in relation to blower housing before disassembly to ensure proper reassembly.

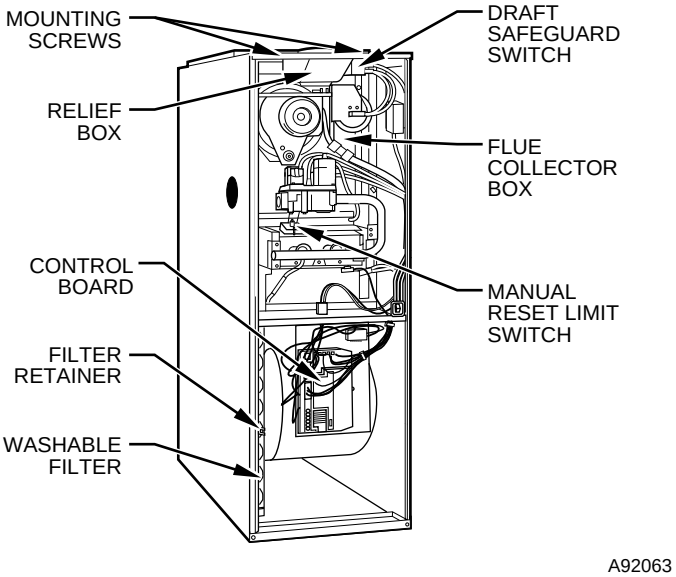


**Fig. 6—Model 58WAV Upflow**

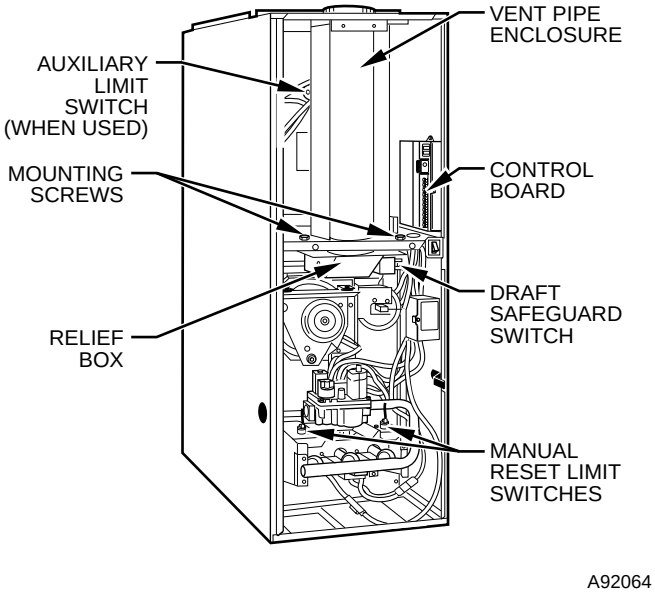


**Fig. 7—Model 58ZAV Downflow**

9. Loosen setscrew holding blower wheel on motor shaft.
10. Remove bolts holding motor mount to blower housing and slide motor and mount out of housing. Disconnect ground wire attached to blower housing before removing motor.
11. Lubricate motor (when oil ports are provided).
    a. Remove dust caps or plugs from oil ports located at each end of motor.
    b. Use a good grade of SAE 20 nondetergent motor oil and put 1 teaspoon, 5 cc, 3/16 oz, or 16 to 25 drops in each oil port. Do not over-oil.
    c. Allow time for total quantity of oil to be absorbed by each bearing.
    d. Wipe excess oil from motor housing.
    e. Replace dust caps or plugs on oil ports.
12. Remove blower wheel from housing.
    a. Mark cutoff location to ensure proper reassembly.
    b. Remove screws holding cutoff plate and remove cutoff plate from housing.
    c. Lift blower wheel from housing through opening.
13. Clean blower wheel and motor using a vacuum cleaner with soft brush attachment. Do not remove or disturb balance weights (clips) on blower wheel blades. The blower wheel should not be dropped or bent as balance will be affected.
14. Reinstall blower wheel by reversing items 12 a through c. Be sure wheel is positioned for proper rotation.
15. Reassemble motor and blower by reversing items 5 through 10. If motor has ground wire, be sure it is connected as before.

**⚠ CAUTION**

Be sure the motor is properly positioned in the blower housing. The motor oil ports must be at a minimum of 45° above the horizontal centerline of the motor after the blower assembly has been reinstalled in the furnace.

16. Reinstall blower assembly in furnace.
17. Reinstall control. Connect blower electrical leads to control. Please note that the common wire connection is 3/16 in. and all other wire connections are 1/4 in. for assembly. DO NOT FORCE.
18. Reconnect wires to auxiliary limit switch on blower housing (downflow/horizontal furnace only).
19. Reinstall vent pipe and enclosure (downflow/horizontal furnace only).
20. Turn on electrical power and check for proper rotation and speed changes between heating and cooling.
21. Replace blower access door. Secure with 2 screws (downflow/horizontal furnace only).

CLEANING HEAT EXCHANGER

**The following steps should be performed by a qualified service technician.**

**NOTE:** Deposits of soot and carbon indicate the existence of a problem which needs to be corrected. Take action to correct the problem.

If it becomes necessary to clean the heat exchanger because of carbon deposits, soot, etc., proceed as follows:

1. Turn off gas and electrical power to furnace.
2. Remove 2 screws from front of blower access door (downflow/horizontal furnace only) and remove control and blower access doors.
3. Remove vent pipe enclosure (downflow/horizontal furnace only) and disconnect vent pipe from relief box.
4. Remove 2 screws that secure relief box. (See Fig. 6 or 7.)
5. Disconnect wires to the following components.
    a. Draft safeguard switch
    b. Inducer motor
    c. Pressure switch
    d. Limit overtemperature switch(es)
    e. Gas valve
    f. Hot surface ignitor
    g. Flame-sensing electrode
    h. Two wiring connectors leading to control
6. Remove 8 screws that secure flue collector box to center panel. Be careful not to damage sealant.
7. Remove complete inducer assembly from furnace, exposing flue openings.

8. Clean cells using field-provided small wire brush, steel spring cable, reversible electric drill, and vacuum cleaner.
   a. Assemble wire brush and steel spring cable.
      (1.) Use 48 in. of 1/4-in. diameter high-grade steel spring cable (commonly known as drain clean-out or Roto-Rooter cable).
      (2.) Use 1/4-in. diameter wire brush (commonly known as 25-caliber rifle cleaning brush).

**NOTE:** The materials needed in items (1.) and (2.) can usually be purchased at local hardware stores.

      (3.) Insert twisted wire end of brush into end of steel spring cable, and crimp tight with crimping tool or strike with ball-peen hammer. TIGHTNESS is very important.
      (4.) Remove metal screw fitting from wire brush to allow insertion into cable.
   b. Clean each heat exchanger cell.
      (1.) Attach variable-speed, reversible drill to end of steel spring cable (end opposite brush).
      (2.) Insert brush end of cable into upper opening of cell and slowly rotate with drill. DO NOT force cable. Gradually insert at least 36 in. of cable into 2 upper passes of cell. (See Fig. 8.)

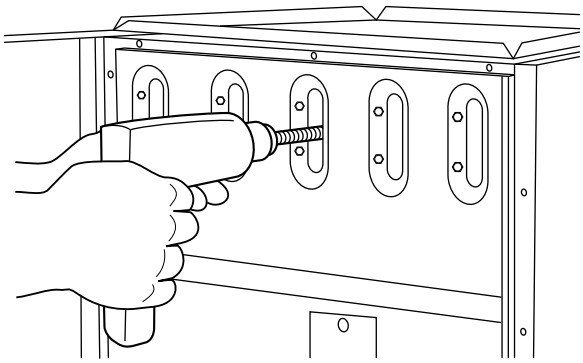

A91252

**Fig. 8—Cleaning Heat Exchanger Cell**

      (3.) Work cable in and out of cell 3 or 4 times to obtain sufficient cleaning. DO NOT pull cable with great force. Reverse drill and gradually work cable out.
      (4.) Remove burner assembly and cell inlet plates.

**⚠ CAUTION**

Be very careful when removing the burner assembly to avoid breaking the ignitor. See Fig. 9 for the correct ignitor location.

      (5.) Replace screws in center panel and cells before cleaning.
      (6.) Insert brush end of cable in lower opening of cell, and proceed to clean 2 lower passes of cell in same manner as 2 upper passes.
      (7.) Repeat foregoing procedures until each cell in furnace has been cleaned.
      (8.) Remove residue from each cell using vacuum cleaner.
      (9.) Clean burner assembly using vacuum cleaner with soft brush attachment.
      (10.) Reinstall cell inlet plates and burner assembly. Care must be exercised to center the burners in the cell openings.

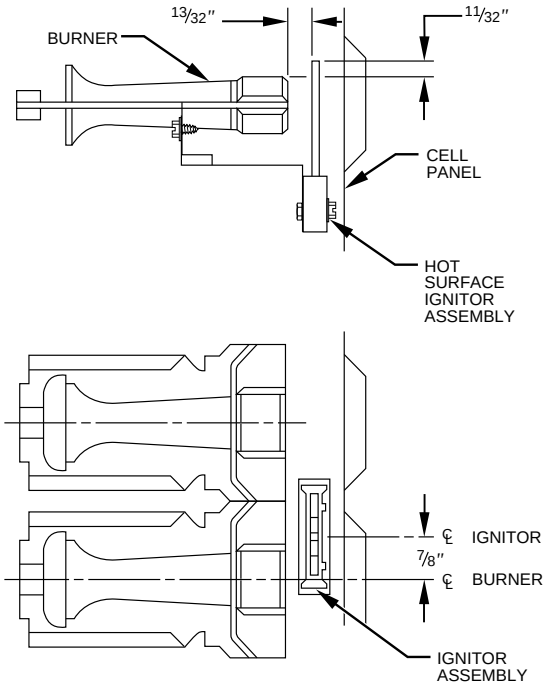


A93347

**Fig. 9—Position of Ignitor to Burner**

9. After cleaning flue openings, check sealant on flue collector to ensure that it has not been damaged. If new sealant is needed, contact your dealer or distributor.
10. Clean and replace flue collector assembly, making sure all 8 screws are secure.
11. Reinstall relief box.
12. Reconnect wires to the following components.
    a. Draft safeguard switch
    b. Inducer motor
    c. Pressure switch
    d. Limit overtemperature switch(es)
    e. Gas valve
    f. Hot surface ignitor
    g. Flame-sensing electrode
    h. Two wiring connectors leading to control
13. Reconnect vent pipe to relief box. Replace vent pipe enclosure (downflow/horizontal furnace only).
14. Replace blower access door only.
15. Turn on electrical power and gas.
16. Set thermostat and check furnace for proper operation.

**⚠ WARNING**

Never use a match or other open flame to check for gas leaks. Use a soap-and-water solution. A failure to follow this warning could result in fire, personal injury, or death.

17. Check for gas leaks.
18. Replace control access door on upflow furnace.
19. On downflow/horizontal furnaces, remove blower access door, replace control access door first, then replace blower access door and secure with 2 screws in front of door.

→ ELECTRICAL CONTROLS AND WIRING

**⚠ CAUTION**

There may be more than 1 electrical supply to the unit. Check accessories and cooling unit for additional electrical supplies.

The electrical ground and polarity for 115-v wiring must be maintained properly. Refer to Fig. 10 for field wiring information and to Fig. 12 for unit wiring information.

**NOTE:** If the polarity is not correct, the STATUS LED on the control center will flash rapidly and prevent the furnace from operating. The control system also requires an earth ground for proper operation of the control board and flame-sensing electrode.

The 24-v circuit contains an automotive-type, 3-amp fuse located on the control board. (See Fig. 11.) Any direct shorts of the 24-v wiring during installation, service, or maintenance will cause this fuse to blow. If fuse replacement is required, use ONLY a fuse of identical size.

With power to the unit disconnected, check all electrical connections for tightness. Tighten all screws on electrical connections. If any smoky or burned connections are found, disassemble the connection, clean all parts, strip wire, and reassemble properly and securely.

Reconnect electrical power to the unit and observe unit through 1 complete operating cycle. Electrical controls are difficult to check without proper instrumentation; if there are any discrepancies in the operating cycle, contact your dealer and request service.

For an explanation of fault codes, refer to service label located on blower access door or Fig 13, and the troubleshooting guide.

The control center stores 1 fault code (the last fault to occur) for a period of 48 hrs or until the 115- or 24-v power is interrupted.

**NOTE:** Removing blower access door will open blower access door switch and terminate 115-v power to control center, and fault code will be erased. Look into blower access door sight glass for current LED status.

1. To retrieve fault code, proceed with the following:

**NOTE:** NO thermostat signal may be present at control center, and all blower time delay off periods must be completed.

   a. Leave 115-v power to furnace turned on.
   b. Look into blower access door sight glass for current LED status.

**NOTE:** Leave blower access panel installed to maintain power to control center to view current LED status.

   c. Remove control access door.
   d. BRIEFLY remove either wire from the main limit switch until LED goes out, then reconnect it.

**NOTE:** If wire to main limit is disconnected longer than 4 sec, main blower starts, and retrieval request is ignored.

2. When above items have been completed, the following will occur:
   a. LED flashes a fault code 4 times. Record this fault code for further troubleshooting.
   b. Inducer motor operates for 10 sec, then turns off.
   c. Hot surface ignitor is energized for 15 sec, then de-energized.
   d. Main blower operates at cooling speed for 10 sec, then turns off.
   e. Main blower operates at heating speed for 10 sec, then turns off.

   Items a through e above will assist in furnace troubleshooting since all components are functionally operated except the gas valve. This procedure is also referred to as "Component Test."
3. Operate furnace through 1 heat cycle to test for proper operation and check LED status.
4. If furnace is operating properly and LED indicates proper operation, replace control access door.
5. Component Test can also be initiated by performing the following:
   a. Remove control access door.
   b. Remove blower access door.
   c. Manually close blower access door switch.

**⚠ WARNING**

Blower access door switch opens 115-v power to control center. No component operation can occur. Caution must be taken when manually closing this switch for service purposes. Failure to follow this warning could result in personal injury or death.

   d. BRIEFLY short (jumper) TEST, 1/4-in. quick-connect terminal on control center (adjacent to LED diagnostic light), and Com terminal on thermostat connection block. (See Fig 11.)

**NOTE:** If TEST to Com terminals are jumpered longer than 2 sec, LED will flash rapidly, and retrieval request will be ignored.

   e. Component Test will function as described in item 2 above.
   f. Check LED status.
   g. If LED status indicates proper operation, release blower access door switch, replace blower access door, and replace control access door.

TROUBLESHOOTING

Refer to the service label. (See Fig. 13.) Pages 10 and 11 contain a troubleshooting guide. This guide can be a useful tool in isolating furnace operation problems. Beginning with the word "Start," answer each question and follow the appropriate arrow to the next item.

The guide will help to identify the problem or failed component. After replacing any component, verify correct operation sequence.

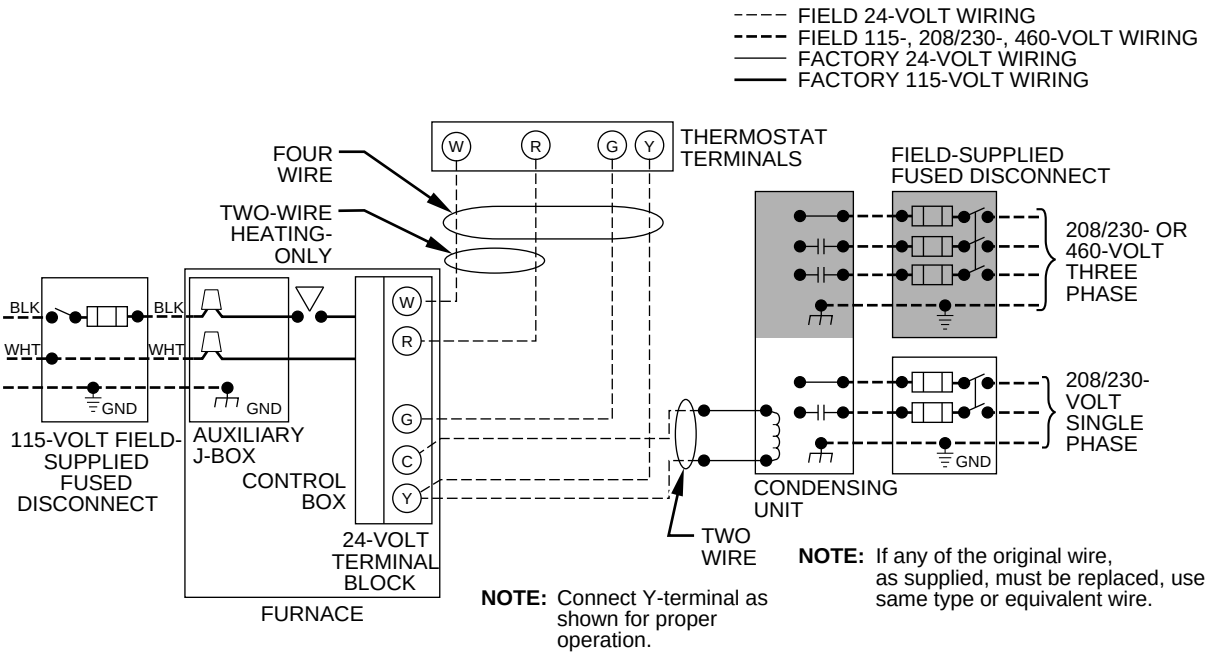


A78461

**Fig. 10—Heating and Cooling Application Wiring Diagram**

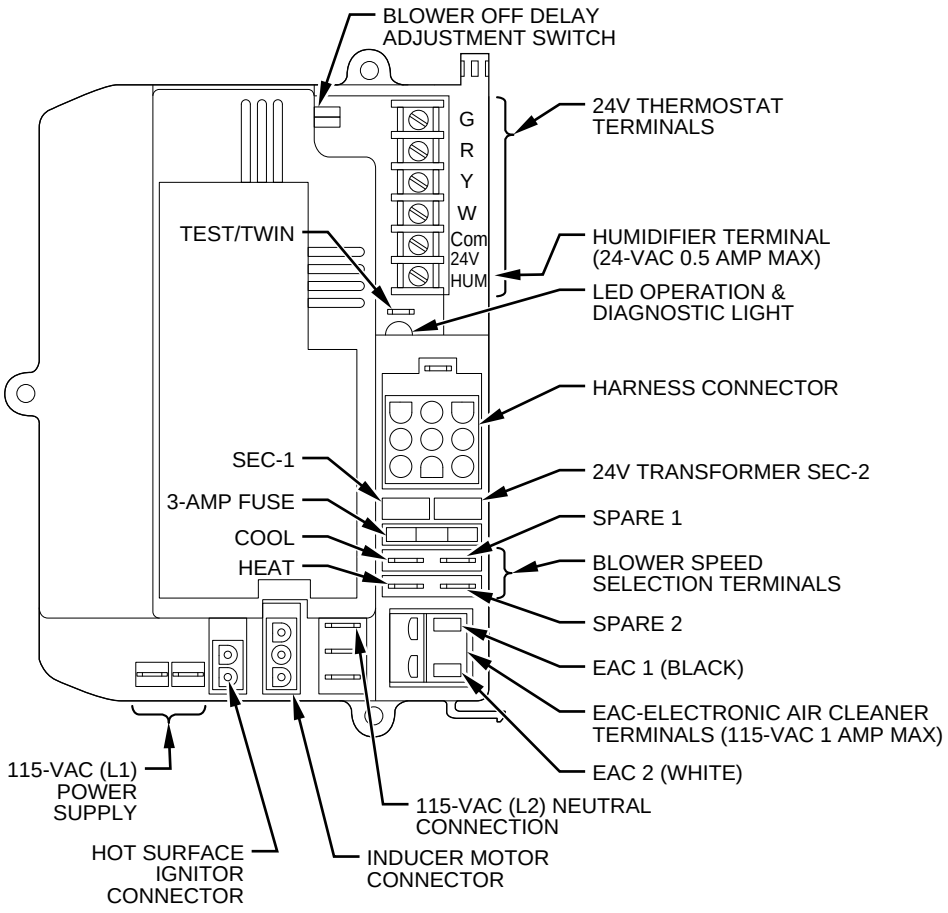


A93052

**Fig. 11—Control Board**

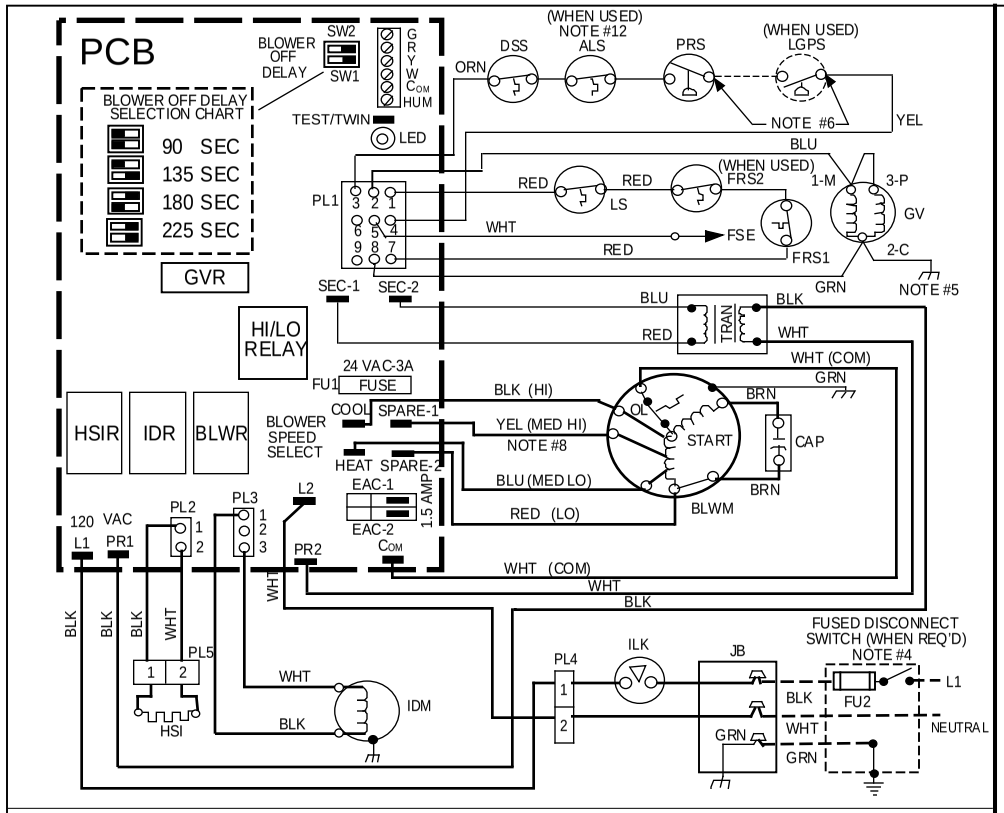


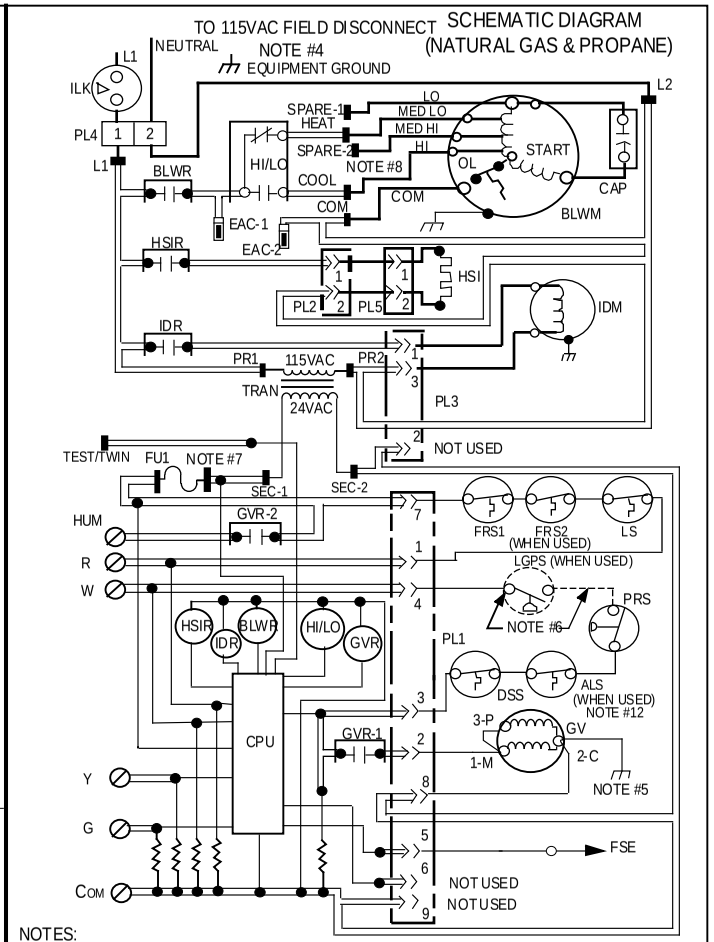


LEGEND

| | |
|---|---|
| ALS | AUXILIARY LIMIT SWITCH, OVERTEMP. -MANUAL RESET, SPST-(N.C.) |
| BLWR | BLOWER MOTOR RELAY, SPST-(N.O.) |
| BLWM | BLOWER MOTOR |
| CAP | CAPACITOR |
| CPU | MICROPROCESSOR AND CIRCUITRY |
| DSS | DRAFT SAFEGUARD SWITCH |
| EAC-1 | ELECTRONIC AIR CLEANER CONNECTION (115 VAC 1.5 AMP MAX.) |
| EAC-2 | ELECTRONIC AIR CLEANER CONNECTION (COMMON) |
| FRS | FLAME ROLLOUT SW. -MANUAL RESET, SPST-(N.C.) |
| FSE | FLAME PROVING ELECTRODE |
| FU1 | FUSE, 3 AMP, AUTOMOTIVE BLADE TYPE, FACTORY INSTALLED |
| FU2 | FUSE OR CIRCUIT BREAKER CURRENT INTERRUPT DEVICE (FIELD INSTALLED & SUPPLIED) |
| GV | GAS VALVE-REDUNDANT OPERATORS |
| GVR | GAS VALVE RELAY, DPST-(N.O.) |
| HI/LO | BLOWER MOTOR SPEED CHANGE RELAY, SPDT |
| HSI | HOT SURFACE IGNITOR (115 VAC) |
| HSIR | HOT SURFACE IGNITOR RELAY, SPST-(N.O.) |
| HUM | 24VAC HUMIDIFIER CONNECTION (.5 AMP. MAX.) |
| IDM | INDUCED DRAFT MOTOR |
| IDR | INDUCED DRAFT RELAY, SPST-(N.O.) |
| ILK | BLOWER ACCESS PANEL INTERLOCK SWITCH, SPST-(N.O.) |
| JB | JUNCTION BOX |
| LED | LIGHT-EMITTING DIODE FOR STATUS CODES |
| LGPS | LOW GAS PRESSURE SWITCH, SPST-(N.O.) |
| LS | LIMIT SWITCH, AUTO RESET, SPST(N.C.) |
| OL | AUTO-RESET INTERNAL MOTOR OVERLOAD TEMP. SW. |
| PCB | PRINTED CIRCUIT BOARD |
| PL1 | 9-CIRCUIT CONNECTOR |
| PL2 | 2-CIRCUIT PCB CONNECTOR |
| PL3 | 3-CIRCUIT IDM CONNECTOR |
| PL4 | 2-CIRCUIT JUNCTION BOX CONNECTOR |
| PL5 | 2-CIRCUIT HSI/PCB CONNECTOR |
| PRS | PRESSURE SWITCH, SPST-(N.O.) |
| TEST/TWIN | COMPONENT TEST & TWIN TERMINAL |
| TRAN | TRANSFORMER-115VAC/24VAC |
| | JUNCTION |
| | UNMARKED TERMINAL |
| | PCB TERMINAL |
| | FACTORY WIRING (115VAC) |
| | FACTORY WIRING (24VAC) |
| | FIELD WIRING (115VAC) |
| | FIELD WIRING (24VAC) |
| | CONDUCTOR ON PCB |
| | FIELD WIRING SCREW TERMINAL |
| | FIELD GROUND |
| | EQUIPMENT GROUND |
| | FIELD SPLICE |
| | PLUG RECEPTACLE |

NOTES:

1. IF ANY OF THE ORIGINAL EQUIPMENT WIRE IS REPLACED USE WIRE RATED FOR 105°C.
2. INDUCER (IDM) AND BLOWER (BLWM) MOTORS CONTAIN INTERNAL AUTO-RESET THERMAL OVERLOAD SWITCHES (OL).
3. BLOWER MOTOR SPEED SELECTIONS ARE FOR AVERAGE CONDITIONS, SEE INSTALLATION INSTRUCTIONS FOR DETAILS ON OPTIMUM SPEED SELECTION.
4. USE ONLY COPPER WIRE BETWEEN THE DISCONNECT SWITCH AND THE FURNACE JUNCTION BOX (JB).
5. THIS WIRE MUST BE CONNECTED TO FURNACE SHEETMETAL FOR CONTROL TO DETECT FLAME.
6. FACTORY CONNECTED WHEN LGPS NOT USED.
7. REPLACE ONLY WITH A 3 AMP FUSE.
8. YELLOW LEAD NOT ON ALL MOTORS.
9. BLOWER-ON DELAY, GAS HEATING 45 SECONDS, COOLING OR HEAT PUMP 2 SECONDS.
10. BLOWER-OFF DELAY, GAS HEATING 90, 135, 180 OR 225 SECONDS, COOLING OR HEAT PUMP 90 SECONDS.
11. IGNITION-LOCKOUT WILL OCCUR AFTER FOUR CONSECUTIVE UNSUCCESSFUL TRIALS-FOR-IGNITION. CONTROL WILL AUTO-RESET AFTER THREE HOURS.
12. WHEN USED AUXILIARY LIMIT SWITCH (ALS) IS ON DOWNFLOW MODELS ONLY.

321257-401 REV. C

A94074

→ **Fig. 12—Unit Wiring Diagram**

## SERVICE LABEL

# SERVICE

**LED CODE** **STATUS**

**CONTINUOUS OFF** - Check for 115VAC at L1 and L2, and 24VAC at SEC-1 and SEC-2.
**CONTINUOUS ON** - Control has 24V power.
**RAPID FLASHING** - Line voltage (115V) polarity reversed. If twinned, 24V power to one furnace may be out of phase with 24V power to other furnace.

EACH OF THE FOLLOWING STATUS CODES IS A TWO DIGIT NUMBER WITH THE FIRST DIGIT DETERMINED BY THE NUMBER OF SHORT FLASHES AND THE SECOND DIGIT BY THE NUMBER OF LONG FLASHES.

**11** **NO PREVIOUS CODE** - Stored status codes are erased when power (115V or 24V) to control is interrupted or 48 hours after each fault is cleared.

**12** **BLOWER ON AFTER POWER UP (115V OR 24V)** - Blower runs for 90 seconds, if unit is powered up during a call for heat (R-W closed).

**13** **LIMIT OR FLAME ROLLOUT SWITCH LOCKOUT** - Auto reset after three hours. Flame rollout switch requires manual reset. Refer to #33.

**14** **IGNITION LOCKOUT** - Control will auto-reset after three hours. Refer to #34.

**21** **GAS HEATING LOCKOUT** - Control will NOT auto reset.
Check for: - Stuck gas valve relay on control or miswire to gas valve circuit.

**22** **ABNORMAL FLAME-PROVING SIGNAL** - Flame is proved while gas valve is de-energized. Inducer will run until fault is cleared.
Check for: - Stuck-open gas valve or leaky gas valve.

**23** **PRESSURE SWITCH DID NOT OPEN** Check for:
- Obstructed pressure tubing.
- Defective pressure switch (stuck closed).

**24** **SECONDARY VOLTAGE FUSE IS OPEN**
Check for: - Short circuit in secondary voltage (24V) wiring.

**31** **PRESSURE, DRAFT SAFEGUARD, OR AUXILIARY LIMIT (when used) SWITCH DID NOT CLOSE OR REOPENED** - If open longer than five minutes, inducer shuts off for 15 minutes before retry. Check for:
- Proper vent sizing and condensate pitch.
- Inadequate combustion air supply.
- Vent restriction or high winds.
- Low inducer voltage.
- Defective inducer motor or start capacitor.
- Defective pressure switch or connections. If it opens after trial for ignition period, blower will come on for 90 second recycle delay.
- Disconnected or obstructed pressure tubing.

**33** **LIMIT OR FLAME ROLLOUT SWITCH IS OPEN** - If open longer than three minutes, code changes to #13. Check for:
- Defective blower motor or start capacitor.
- Dirty filter or restricted duct system.
- Loose blower wheel.
- Defective switch or connections.
- Inadequate combustion air supply (flame rollout switch only).
- Open flame rollout switch, manual reset.

**34** **IGNITION PROVING FAILURE** - Control will try three more times before a lockout #14 occurs. If flame signal lost after trial for ignition period, blower will come on for 90 second recycle delay.
Check for: - Oxide buildup on flame sensor (clean with fine sandpaper).
- Proper flame sense microamps (.5 microamps D.C. minimum).
- Gas valve turned off.
- Manual shut-off valve.
- Green wire MUST be connected to furnace sheet metal.
- Inadequate flame carryover or rough ignition.
- Low inlet gas pressure.

# COMPONENT TEST

To initiate the component test sequence, shut OFF the room thermostat or disconnect the "R" thermostat lead. Briefly short the TEST terminal to the "C" terminal. Status LED will flash code and then turn on the inducer motor, hot surface igniter, blower motor-heat speed, and blower motor-cool speed for 10-15 seconds each.

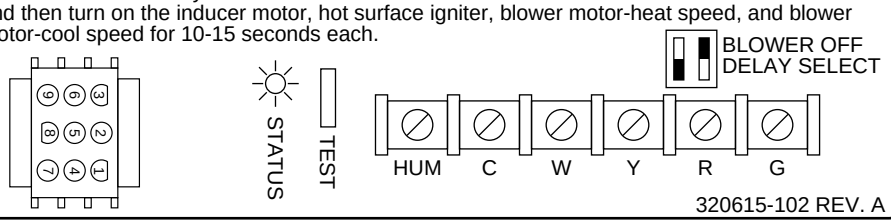


320615-102 REV. A

A93297

**Fig. 13—Service Label**

# TROUBLESHOOTING GUIDE

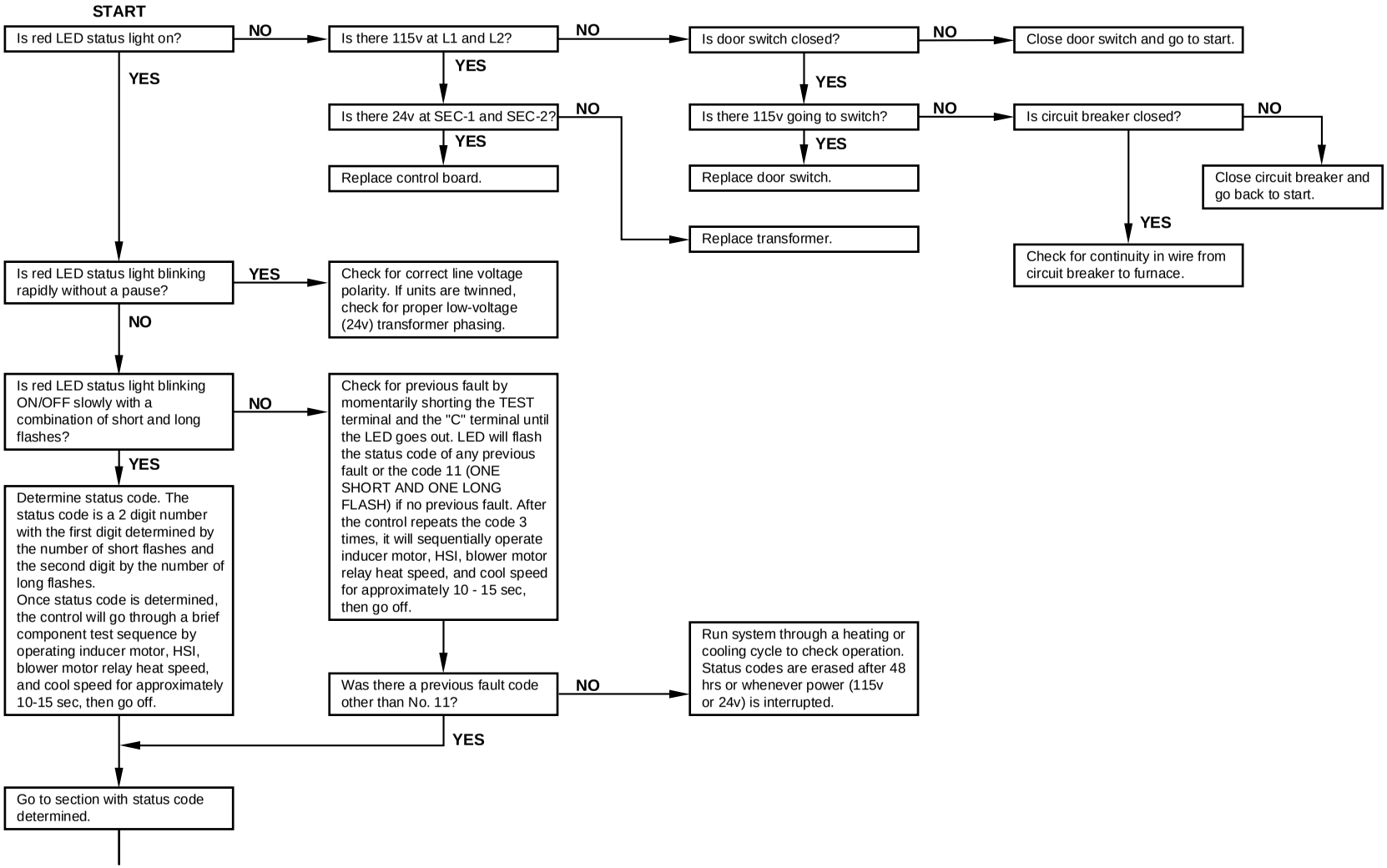

11 **NO PREVIOUS FAULT** - Faults are erased after 48 hrs or whenever power (115V or 24V) is interrupted. Run system through a heating or cooling cycle to recheck system.

12 **BLOWER ON AFTER POWER UP (115V OR 24V)** - Normal operation. Blower will run for 90 sec when furnace power is interrupted during a call for heat and R-W closes.

13 **LIMIT OR FLAME ROLLOUT SWITCH LOCKOUT** - Limit switch was open longer than 3 minutes. Auto-reset will occur after 3 hrs. Flame rollout switch requires manual reset.
See No. 33

14 **IGNITION LOCKOUT** - System failed to ignite gas and prove flame in 4 attempts. Control will auto-reset in 3 hrs.
See No. 34

21 **GAS HEATING LOCKOUT** - Turn off power and wait 5 minutes to retry.
Check for:
- Stuck closed gas valve relay on control.
- Miswire or short to gas valve wire.

22 **ABNORMAL FLAME PROVING SIGNAL** - Flame was sensed while gas valve was de-energized. Inducer will run until fault is cleared.
Check for:
- Stuck open gas valve solenoid or leak.
- Defective control board.

23 **PRESSURE SWITCH WILL NOT OPEN** - Check for:
- Disconnected or obstructed pressure tubing.
- Defective pressure switch.

24 **LOW-VOLTAGE FUSE IS OPEN** - Check for:
- Short in low-voltage wiring including thermostat leads shorting to ductwork or furnace cabinet. Disconnect thermostat leads to isolate short circuit.

31 **PRESSURE, DRAFT SAFEGUARD (WHEN USED), OR AUXILIARY LIMIT (WHEN USED) SWITCH WILL NOT CLOSE OR REOPEN** - If open longer than 5 minutes, inducer shuts off for 15 minutes before retry.
Check for:
- Proper vent sizing or pitch or sag.
- Vent restrictions or high winds.
- Defective inducer motor.
- Low-line voltage (115v).
- Motor start capacitor.
- Low inlet gas pressure.
- Defective pressure switch or connections. If it opens after trial for igniton period, blower will come on for 90 sec recycle delay.
- Inadequate combustion air (for draft safeguard and auxiliary limit switches only).

33 **LIMIT OR FLAME ROLLOUT SWITCH IS OPEN** - If limit switch is open longer than 3 minutes, code changes to No. 13.
Check for:
- Blower motor failure.
- Motor start capacitor.
- Open flame rollout switch, manual reset.
- Inadequate combustion air supply (flame rollout switch only).
- Dirty filter.
- Defective limit switch or connections.
- Loose blower wheel.

34 **IGNITION PROVING FAILURE** - If flame is not sensed during the trial for ignition period, the control will repeat the ignition sequence 3 more times before going into lockout, No. 14.
If flame signal is lost after trial for ignition period, blower will come on for 90 sec recycle delay.
Check for the following items first before proceding to the next step.
- Gas valve turned off.
- Manual shut-off valve.
- Green wire must be connected to furnace sheet metal.

To determine whether the problem is in the gas valve, igniter, or flame sensor, the system can be operated in the component test mode to check out the ignitor. First, remove the R thermostat connection from the control board and initiate the component test sequence. Does the ignitor glow orange/white hot by the end of the 17 sec warm-up period?

**NO** → Unplug ignitor harness from control center and inititate another component test sequence and check for 115v between pins 1 and 2 on the board. Was there 115v present for the 17 sec period?

- **NO** → Replace control board.
- **YES** → Check for continuity in the harness and ignitor. Replace defective component.

**YES** → Reconnect the R thermostat lead and set thermostat to call for heat. Connect voltmeter across gas valve connections. Does gas valve receive 24v?

- **NO** → Check connections. If OK, replace control board.
- **YES** → Does gas valve open and allow gas to flow?
  - **NO** → Check that all gas valves are turned on. Replace valve.
  - **YES** → Do main burners ignite?
    - **NO** → Check for:
      - Inadequate flame carryover on rough ignition.
      - Low inlet gas pressure.
    - **YES** → Do main burners stay on?
      - **NO** → Repeat call for heat and check flame sensor current during trial for ignition period. Is the dc microamperes below 0.5?
        - **NO** → Check connections and retry. If current is near typical value and control will not stay on, replace control board.
        - **YES** → Clean flame sensor with fine sandpaper and recheck current. Current is nominally 4.0 to 6.0 microamps.
          - Is current near typical value?
            - **NO** → Replace electrode.
            - **YES** → Will main burner ignite and stay on?
              - **NO** → Replace control board.
              - **YES** → Fixed.
      - **YES** → Allow blower to come on and repeat test to check for intermittent operation.

Copyright 1994 CARRIER Corp. • 7310 W. Morris St. • Indianapolis, IN 46231



**Manufacturer reserves the right to discontinue, or change at any time, specifications or designs without notice and without incurring obligations.**