# 58WAV, 58ZAV
# Induced-Combustion Furnaces

Visit www.carrier.com

# Service and Maintenance Instructions
## For Sizes 045-155, Series 140

**NOTE:** Read the entire instruction manual before performing any service or maintenance.

This symbol → indicates a change since the last issue.

These procedures are for size 44,000 through 154,000 Btuh input units.

Index Page


SAFETY CONSIDERATIONS....1-2
ELECTROSTATIC DISCHARGE (ESD) PRECAUTIONS PROCEDURE....2
CARE AND MAINTENANCE....2-11
- Air Filter Arrangement....2-3
- Blower Motor and Wheel....3-4
- Cleaning Heat Exchanger....4-5
- Electrical Controls and Wiring....5-6
- Troubleshooting....6-11
- Unit Wiring Diagram....8
- Service Label....9
- Troubleshooting Guide....10-11


### SAFETY CONSIDERATIONS

Installing and servicing heating equipment can be hazardous due to gas and electrical components. Only trained and qualified personnel should install, repair, or service heating equipment.

Untrained personnel can perform basic maintenance functions such as cleaning and replacing air filters. All other operations must be performed by trained service personnel. When working on heating equipment, observe precautions in the literature, on tags, and on labels attached to or shipped with the unit and other safety precautions that may apply.

Follow all safety codes. In the United States, follow all safety codes including the National Fuel Gas Code (NFGC) NFPA 54-1999/ANSI Z223.1-1999. In Canada, refer to the CAN/CGA-B149.1- and .2-M95 National Standard of Canada, Natural Gas and Propane Installation Codes (NSCNGPIC). Wear safety glasses and work gloves. Have fire extinguisher available during start-up and adjustment procedures and service calls.

Recognize safety information. This is the safety-alert symbol ⚠. When you see this symbol on the furnace and in instructions or manuals, be alert to the potential for personal injury.

Understand the signal words DANGER, WARNING, CAUTION, and NOTE. These words are used with the safety-alert symbol. DANGER identifies the most serious hazards which **will** result in severe personal injury or death. WARNING signifies a hazard which **could** result in personal injury or death. CAUTION is used to identify unsafe practices which **would** result in minor personal injury or product and property damage. NOTE is used to highlight suggestions which **will** result in enhanced installation, reliability, or operation.

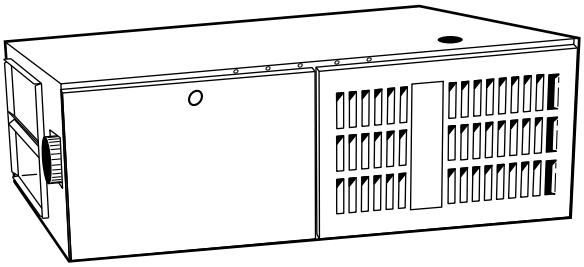

A94087

**Fig. 1—Model 58ZAV Horizontal**

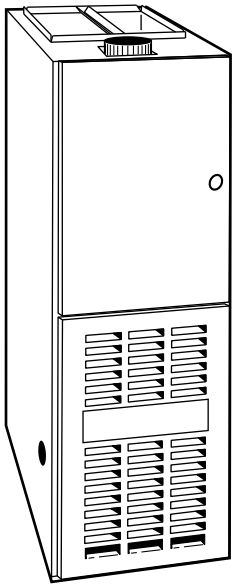

A94086

**Fig. 2—Model 58ZAV Downflow**

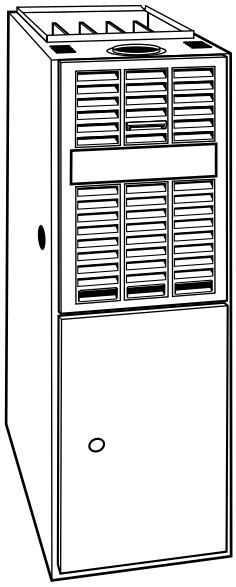

A94085

**Fig. 3—Model 58WAV Upflow**

REGISTERED QUALITY SYSTEM


**Manufacturer reserves the right to discontinue, or change at any time, specifications or designs without notice and without incurring obligations.**

**⚠ WARNING**

The ability to properly perform maintenance on this equipment requires certain expertise, mechanical skills, tools, and equipment. If you do not possess these, do not attempt to perform any maintenance on this equipment other than those procedures recommended in the User's Manual. FAILURE TO FOLLOW THIS WARNING COULD RESULT IN POSSIBLE DAMAGE TO THIS EQUIPMENT, SERIOUS PERSONAL INJURY, OR DEATH.

**⚠ CAUTION**

Label all wires prior to disconnection when servicing controls. Wiring errors can cause improper and dangerous operation.

### ELECTROSTATIC DISCHARGE (ESD) PRECAUTIONS PROCEDURE

**⚠ CAUTION**

Electrostatic discharge can affect electronic components. Take precautions during furnace installation and servicing to protect the furnace electronic control. Precautions will prevent electrostatic discharges from personnel and hand tools which are held during the procedure. These precautions will help to avoid exposing the control to electrostatic discharge by putting the furnace, the control, and the person at the same electrostatic potential.

1. Disconnect all power to the furnace. DO NOT TOUCH THE CONTROL OR **ANY** WIRE CONNECTED TO THE CONTROL PRIOR TO DISCHARGING YOUR BODY'S ELECTROSTATIC CHARGE TO GROUND.
2. Firmly touch a clean, unpainted, metal surface of the furnace chassis which is close to the control. Tools held in a person's hand during grounding will be satisfactorily discharged.
3. After touching the chassis you may proceed to service the control or connecting wires as long as you do nothing that recharges your body with static electricity (for example; DO NOT move or shuffle your feet, DO NOT touch ungrounded objects, etc.).
4. If you touch ungrounded objects (recharge your body with static electricity), firmly touch furnace again before touching control or wires.
5. Use this procedure for installed and uninstalled (ungrounded) furnaces.
6. Before removing a new control from its container, discharge your body's electrostatic charge to ground to protect the control from damage. If the control is to be installed in a furnace, follow items 1 through 5 before bringing the control or yourself into contact with the furnace. Put all used AND new controls into containers before touching ungrounded objects.
7. An ESD service kit (available from commercial sources) may also be used to prevent ESD damage.

## CARE AND MAINTENANCE

For continuing high performance and to minimize possible equipment failure, it is essential that periodic maintenance be performed on this equipment. Consult your local dealer as to the proper frequency of maintenance and the availability of a maintenance contract.

**⚠ WARNING**

Never store anything on, near, or in contact with the furnace, such as:
1. Spray or aerosol cans, rags, brooms, dust mops, vacuum cleaners, or other cleaning tools.
2. Soap powders, bleaches, waxes or other cleaning compounds, plastic or plastic containers, gasoline, kerosene, cigarette lighter fluid, dry cleaning fluids, or other volatile fluids.
3. Paint thinners and other painting compounds, paper bags, or other paper products.

A failure to follow this warning could result in corrosion of the heat exchanger, fire, personal injury, or death.

**⚠ WARNING**

Turn off the gas and electrical supplies to the unit before performing any maintenance or service. Follow the operating instructions on label attached to furnace. A failure to follow this warning could result in personal injury.

The minimum maintenance that should be performed on this equipment is as follows:

1. Check and clean air filter each month or more frequently if required. Replace if torn.
2. Check blower motor and wheel for cleanliness each heating and cooling season. Clean and lubricate as necessary.
3. Check electrical connections for tightness and controls for proper operation each heating season. Service as necessary.

**⚠ CAUTION**

As with any mechanical equipment, personal injury can result from sharp metal edges, etc., therefore, be careful when removing parts.

AIR FILTER ARRANGEMENT

The air filter arrangement may vary depending on the application. Refer to Table 1 or 2 for filter size information.

### Table 1—Filter Size Information for Downflow/Horizontal Furnaces (In.)

| FURNACE CASING WIDTH | FILTER QUANTITY AND SIZE | FILTER TYPE |
|---|---|---|
| **14-3/16** | (2) 14 X 20 X 1 | Cleanable |
| **17-1/2** | (2) 14 X 20 X 1 | Cleanable |
| **21** | (2) 16 X 20 X 1 | Cleanable |
| **24-1/2** | (2) 16 X 20 X 1 | Cleanable |

### Table 2—Filter Size Information for Upflow Furnaces (In.)

| FURNACE CASING WIDTH | FILTER QUANTITY AND SIZE† | | FILTER TYPE |
|---|---|---|---|
| | Side Return | Bottom Return | |
| **14-3/16** | (1) 16 X 25 X 1* | (1) 14 X 25 X 1 | Cleanable |
| **17-1/2** | (1) 16 X 25 X 1* | (1) 16 X 25 X 1 | Cleanable |
| **21** | (1) 16 X 25 X 1 | (1) 20 X 25 X 1* | Cleanable |
| **24-1/2** | (2) 16 X 25 X 1* | (1) 24 X 25 X 1 | Cleanable |

* Factory-provided with the furnace.
† Filters may be field modified as required by cutting and folding the frame as indicated on the filter.

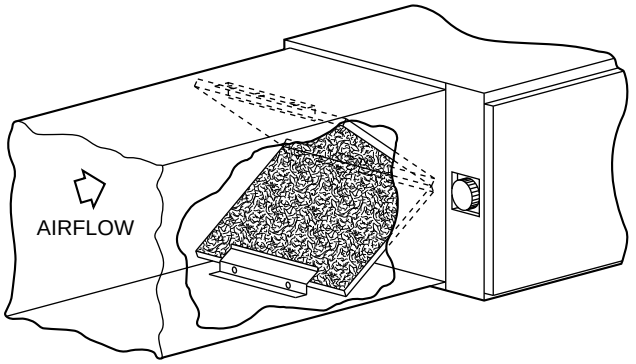


A94307

**Fig. 4—Horizontal Filter Arrangement**

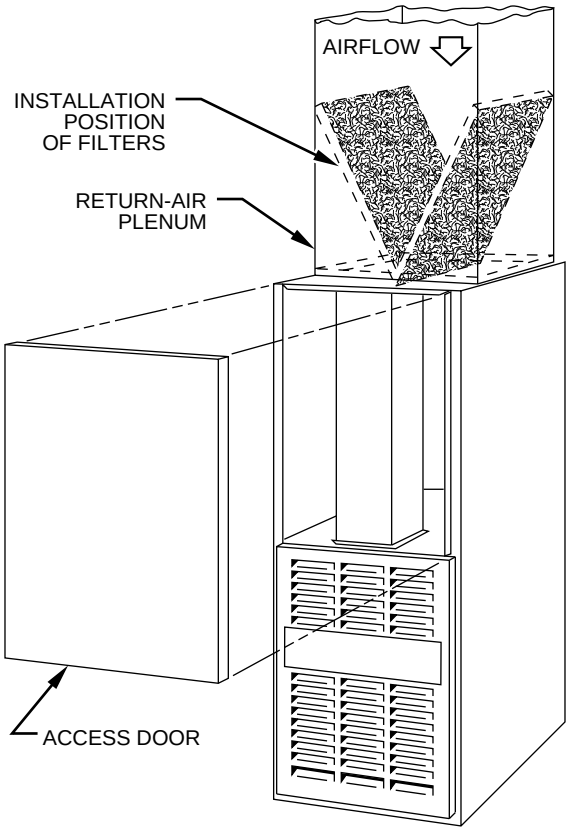


A88486

**Fig. 5—Downflow Filter Arrangement**

**⚠ WARNING**

Never operate unit without a filter or with filter access door removed. A failure to follow this warning could result in fire, personal injury, or death.

1. Downflow/Horizontal

   Each furnace requires 2 filters which are installed in the return-air duct. (See Fig. 4 and 5.) To remove filters for cleaning or replacement, proceed as follows:

   a. Disconnect electrical power before removing blower access door.

   b. Remove 2 screws from front of door and remove blower access door.

   c. Reach up behind top plate, tilt filters toward center of return-air plenum, remove filters, and clean as needed. Replace if torn.

   d. Furnaces are equipped with permanent, washable filters. Clean filters with tap water. Spray water through filter in opposite direction of airflow.

   e. Rinse and let dry. Oiling or coating of filters is not recommended or required.

   f. Reinstall filters.

   g. Replace blower access door.

   h. Restore electrical power to furnace.

2. Upflow

→ Each furnace requires 1 or 2 filters which are installed in the side and/or bottom of the blower compartment. (See Fig. 6.) To remove filters for cleaning or replacement, proceed as follows:

   a. Disconnect electrical power before removing access doors.

   b. Remove blower and control access doors.

   c. Release filter retainer from clip at front of furnace casing. (See Fig. 6.) For side return, clips may be used on either or both sides of the furnace.

   d. Slide filter(s) out.

   e. Furnaces are equipped with permanent, washable filters. Clean filters with tap water. Spray water through filter in opposite direction of airflow.

   f. Rinse and let dry. Oiling or coating of filter is not recommended or required.

   g. Reinstall filter(s).

   h. Replace blower and control access doors.

   i. Restore electrical power to furnace.

→ BLOWER MOTOR AND WHEEL

**The following steps should be performed by a qualified service technician.**

To ensure long life, economy, and high efficiency, clean accumulated dirt and grease from blower wheel and motor annually.

The inducer and blower motors are pre-lubricated and require no additional lubrication. These motors can be identified by the absence of oil ports on each end of the motor.

Clean blower motor and wheel as follows:

1. Turn off electrical supply to furnace.
2. Remove 2 screws from blower access door (downflow/horizontal furnace only) and remove blower access door.
3. Downflow only.

   a. Disconnect vent connector from furnace flue collar. (See Fig. 7.)

   b. Remove internal vent pipe enclosure cover.

   c. Disconnect and remove short piece of vent pipe from within furnace.

   d. Disconnect and remove vent pipe enclosure. Push bottom side backward to release tabs.

**NOTE:** Vent pipe is SCREWED and RTV sealed to relief box.

4. Disconnect blower leads from furnace control. Note wire color and location for reassembly. Also, disconnect auxiliary limit switch leads (downflow only, if present).

   All other factory wires can be left connected, but field thermostat connections may need to be disconnected depending on their length and routing.

5. Remove 2 screws securing control and transformer support to furnace.

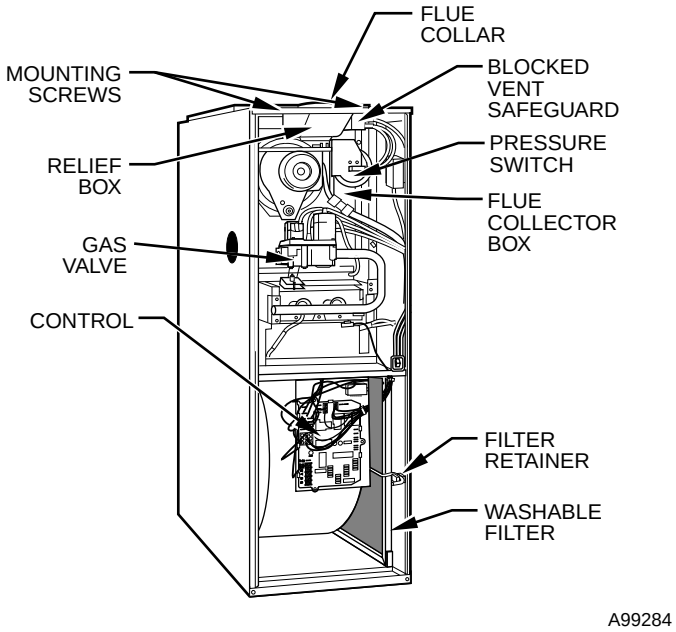


**Fig. 6—Model 58WAV Upflow**

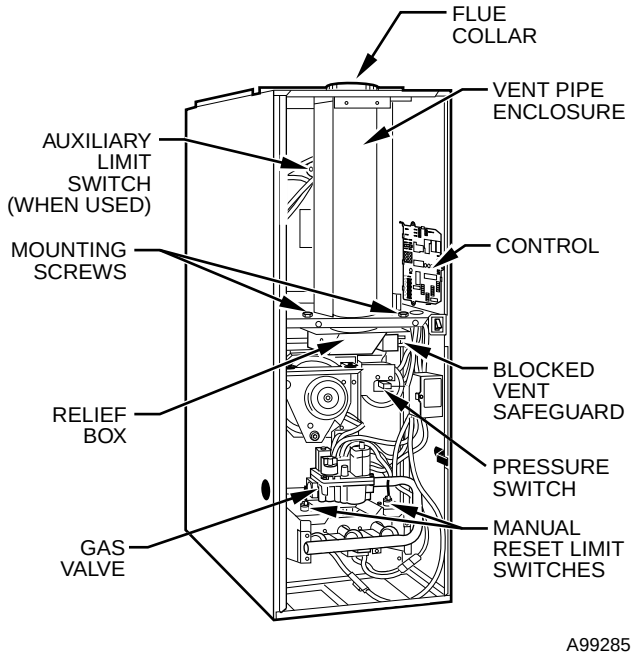


**Fig. 7—Model 58ZAV Downflow**

6. Hang control and transformer support to front of furnace casing.
7. Remove screws holding blower assembly to blower deck and slide blower assembly out of furnace.
8. Clean blower wheel and motor using a vacuum with soft brush attachment. Do not remove or disturb balance weights (clips) on blower wheel blades. The blower wheel should not be dropped or bent as balance will be affected.
9. If a greasy residue is present on blower wheel, remove wheel from the blower housing and wash it with an appropriate degreaser. To remove wheel:
   a. Mark blower wheel location on shaft before disassembly to ensure proper reassembly.
   b. Loosen setscrew holding blower wheel on motor shaft.

**NOTE:** Mark blower mounting arms, motor, and blower housing so motor and each arm is positioned at the same location during reassembly.

   c. Mark blower wheel orientation and cutoff plate location to ensure proper reassembly.
   d. Remove screws securing cutoff plate and remove cutoff plate from housing.
   e. Remove bolts holding motor and motor mounts to blower housing and slide motor and mounts out of housing. Disconnect capacitor and ground wire attached to blower housing before removing motor. Motor mount belly band need not be removed unless motor is to be replaced.
   f. Remove blower wheel from housing.

**⚠ CAUTION**

The blower wheel should not be dropped or bent as balance will be affected.

10. Reassemble motor and blower by reversing items 9a through 9f. Be sure to reattach ground wire.
11. Reinstall blower assembly in furnace.
12. Reinstall control and transformer support assembly in furnace.
13. Reconnect blower leads to furnace control and auxiliary limit switch leads (downflow only).

    Refer to furnace wiring diagram, and connect thermostat leads if previously disconnected. (see Fig. 12.)

**NOTE:** Refer to Table 3 for motor speed lead relocation if leads were not identified before disconnection.

**→Table 3—Speed Selector**

| COLOR | SPEED | FACTORY-ATTACHED TO |
|---|---|---|
| **Black** | High | Cool |
| **Yellow (When present)** | Medium-High | Spare |
| **Blue** | Medium-Low | Heat |
| **Red** | Low | Spare |
| **White** | Common | L2/COM |

**⚠ CAUTION**

Heating air speed selection MUST be adjusted to provide proper air temperature rise as specified on the rating plate. Failure to adjust the heating speed may shorten heat exchanger life.

14. Downflow furnaces only: Reinstall internal vent pipe and enclosure by reversing items 3a through 3d.

**NOTE:** A releasing agent such as PAM cooking spray or equivalent (must not contain corn or canola oil, aromatic or halogenated hydrocarbons or inadequate seal may occur) and RTV sealant (G.E. 162, 6702, or Dow-Corning 738) are needed before starting installation. DO NOT substitute any other type of RTV sealant. G.E. 162 (P771-9003) is available through RCD in 3-oz. tubes.

15. Reinstall vent connector to furnace flue collar. After fully assembling vent connector to furnace flue collar, securely fasten vent connector to flue collar with 2 field-supplied, corrosion-resistant, sheet metal screws located 180° apart and midway up the collar.
16. Turn on electrical supply. Manually close blower access door switch. Use a piece of tape to hold switch closed. Check for proper rotation and speed changes between heating and cooling by jumpering R to W and then R to Y on furnace control thermostat terminals.

**⚠ WARNING**

Blower access door switch opens 115-v power to furnace control. No component operation can occur. Caution must be taken when manually closing this switch for service purposes. Failure to follow this warning could result in electrical shock, personal injury, or death.

**NOTE:** If thermostat terminals are jumpered before blower access door switch is closed, blower will run for 90 sec before beginning a heating or cooling cycle.

17. If furnace is operating properly, REMOVE TAPE TO RELEASE BLOWER ACCESS DOOR SWITCH, replace blower access door.

→ CLEANING HEAT EXCHANGER

**The following steps should be performed by a qualified service technician.**

**NOTE:** If the heat exchangers get a heavy accumulation of soot and carbon, they should be replaced rather than trying to clean them thoroughly due to their intricate design. A build-up of soot and carbon indicates that a problem exists which needs to be corrected, such as improper adjustment of manifold pressure, insufficient or poor quality combustion air, incorrect size, or damaged manifold orifice(s), improper gas, or a restricted heat exchanger. Action must be taken to correct the problem.

If it becomes necessary to clean the heat exchanger because of dust or corrosion, proceed as follows:

1. Turn gas and electrical power to furnace OFF.
2. Remove control access door.
3. Disconnect vent connector from furnace flue collar.
4. Disconnect internal vent pipe and enclosure on downflow furnaces only.
   a. Remove internal vent pipe enclosure cover.
   b. Disconnect and remove short piece of vent pipe from within furnace.

**NOTE:** Vent pipe is SCREWED and RTV sealed to relief box.

   c. Remove vent pipe enclosure by removing screw in upper back. Push bottom side backward to release tabs.
5. Remove 2 screws that secure relief box. (See Fig. 6 or 7.)
6. Disconnect wires to the following components. Mark wires to aid in reconnection of:
   a. Blocked vent safeguard switch.
   b. Inducer motor.
   c. Pressure switch.
   d. Limit overtemperature switch(es).
   e. Gas valve.
   f. Hot surface igniter.
   g. Flame-sensing electrode.
   h. Flame rollout switch(es), if applicable.
7. Remove complete inducer assembly and relief box from furnace.
8. Remove 8 screws that secure flue collector box to center panel. Be careful not to damage collector box.
9. Remove burner assembly and cell inlet plates. IMPORTANT: Replace screws in center panel and cells before cleaning.

**NOTE:** Be careful when removing burner assembly to avoid breaking igniter. See Fig. 8 for correct igniter location.

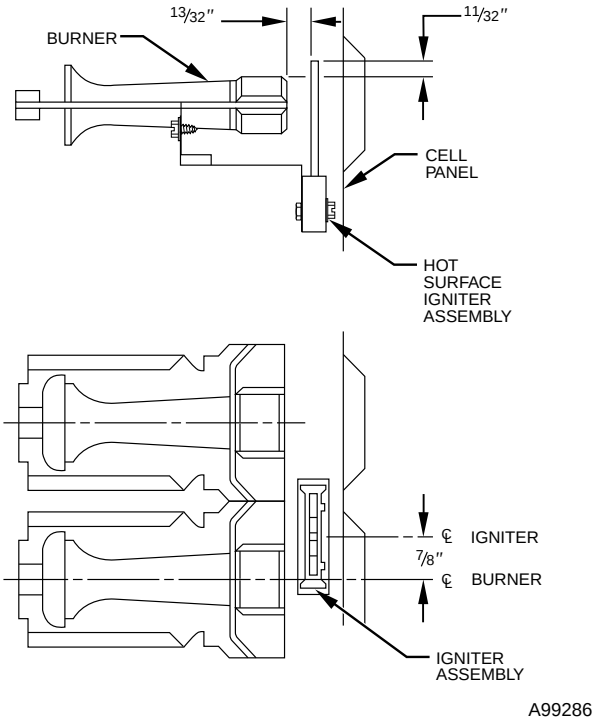


**Fig. 8—Position of Igniter to Burner**

10. Using field-provided small wire brush, steel spring cable, reversible electric drill, and vacuum cleaner, clean cells as follows:
    a. Assemble wire brush and steel spring cable.
       (1.) Use 48 in. of 1/4-in. diameter high-grade steel spring cable (commonly known as drain clean-out or Roto-Rooter® cable).
       (2.) Use 1/4-in. diameter wire brush (commonly known as 25-caliber rifle cleaning brush).

**NOTE:** The materials needed in (1.) and (2.) can usually be purchased at local hardware stores.

       (3.) Insert twisted wire end of brush into end of spring cable, and crimp tight with crimping tool or strike with ball-peen hammer. TIGHTNESS IS VERY IMPORTANT.
       (4.) Remove metal screw fitting from wire brush to allow insertion into cable.
    b. Clean each heat exchanger cell.
       (1.) Attach variable-speed, reversible drill to end of spring cable (end opposite brush).
       (2.) Insert brush end of cable into upper opening of cell and slowly rotate with drill. DO NOT force cable. Gradually insert at least 36 in. of cable into 2 upper passes of cell. (See Fig. 9.)
       (3.) Work cable in and out of cell 3 or 4 times to obtain sufficient cleaning. DO NOT pull cable with great force. Reverse drill and gradually work cable out.
       (4.) Insert brush end of cable in lower opening of cell, and proceed to clean 2 lower passes of cell in same manner as 2 upper passes.
       (5.) Repeat foregoing procedures until each cell in furnace has been cleaned.
       (6.) Using vacuum cleaner, remove residue from each cell.
       (7.) Using vacuum cleaner with soft brush attachment, clean burner assembly.

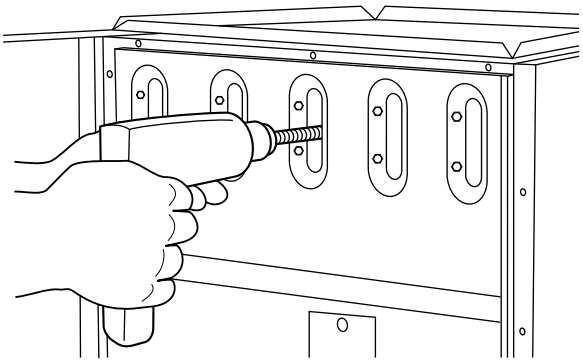

A91252

**Fig. 9—Cleaning Heat Exchanger Cell**

(8.) Reinstall cell inlet plates and burner assembly. Care must be exercised to center burners in cell openings.

11. Clean flame sensor with fine steelwool.
12. Remove old sealant from center panel and collector box flange and apply new sealant to collector box flange and reinstall on center panel, making sure all 8 screws are secure.

**NOTE:** A releasing agent such as PAM cooking spray or equivalent (must not contain corn or canola oil, aromatic or halogenated hydrocarbons or inadequate seal may occur) and RTV sealant (G.E. 162, 6702, or Dow-Corning 738) are needed before starting installation. DO NOT substitute any other type of RTV sealant. G.E. 162 (P771-9003) is available through RCD in 3-oz. tubes.

13. Reinstall relief box and inducer assembly.

**NOTE:** If inducer assembly gasket is damaged, use RTV sealant to seal inducer assembly to collector box.

**NOTE:** A releasing agent such as PAM cooking spray or equivalent (must not contain corn or canola oil, aromatic or halogenated hydrocarbons or inadequate seal may occur) and RTV sealant (G.E. 162, 6702, or Dow-Corning 738) are needed before starting installation. DO NOT substitute any other type of RTV sealant. G.E. 162 (P771-9003) is available through RCD in 3-oz. tubes.

14. Reconnect wires to the following components.
    a. Blocked vent safeguard switch.
    b. Inducer motor.
    c. Pressure switch.
    d. Limit overtemperature switch(es).
    e. Gas valve.
    f. Hot surface igniter.
    g. Flame-sensing electrode.
    h. Flame rollout switch(es), if applicable.
15. Reinstall vent pipe and enclosure on downflow furnaes only by reversing items 4a through 4c.

**NOTE:** A releasing agent such as PAM cooking spray or equivalent (must not contain corn or canola oil, aromatic or halogenated hydrocarbons or inadequate seal may occur) and RTV sealant (G.E. 162, 6702, or Dow-Corning 738) are needed before starting installation. DO NOT substitute any other type of RTV sealant. G.E. 162 (P771-9003) is available through RCD in 3-oz. tubes.

16. Reinstall vent connector on furnace flue collar. After fully assembling vent connector to furnace flue collar, securely fasten vent connector to flue collar with 2 field-supplied, corrosion-resistant, sheet metal screws located 180° apart and midway up the collar.
17. Replace blower access door only.
18. Turn electrical power and gas to ON.
19. Set thermostat and check furnace for proper operation.
20. Verify blower airflow and speed changes between heating and cooling.
21. Check for gas leaks.

**⚠ WARNING**

Never use a match or other open flame to check for gas leaks. Use a soap-and-water solution. A failure to follow this warning could result in fire, personal injury, or death.

22. Replace control access door on upflow furnace.
23. On downflow/horizontal furnaces, remove blower access door, replace control access door first, then replace blower access door and secure with 2 screws in front of door.

ELECTRICAL CONTROLS AND WIRING

**⚠ CAUTION**

There may be more than 1 electrical supply to the unit. Check accessories and cooling unit for additional electrical supplies.

The electrical ground and polarity for 115-v wiring must be properly maintained. Refer to Fig. 10 for field wiring information and to Fig. 12 for furnace wiring information.

**NOTE:** If the polarity is not correct, the STATUS LED on the control will flash rapidly and prevent the furnace from heating. The control system also requires an earth ground for proper operation of the control and flame-sensing electrode.

→ The 24-v circuit contains an automotive-type, 3-amp fuse located on the control. (See Fig. 11.) Any shorts of the 24-v wiring during installation, service, or maintenance will cause this fuse to blow. If fuse replacement is required, use ONLY a 3-amp fuse. The control LED will display status code 24 when fuse needs to be replaced.

With power to the unit disconnected, check all electrical connections for tightness. Tighten all screws on electrical connections. If any smoky or burned connections are found, disassemble the connection, clean all parts, strip wire, and reassemble properly and securely.

Reconnect electrical power to the unit and observe unit through 1 complete operating cycle. Electrical controls are difficult to check without proper instrumentation; if there are any discrepancies in the operating cycle, contact your dealer and request service.

The control in this furnace is equipped with an LED status light to aid in installation, servicing, and troubleshooting. It can be viewed through the sight glass or window on blower access door. The control indicates status with the LED on continuously, rapid flashing, or a code composed of 2 digits. (The first digit is the number of short flashes, the second is the number of long flashes.)

For an explanation of status codes, refer to service label located on blower access door or Fig. 13, and the troubleshooting guide.

The control stores 1 status code (the last status code to occur) for a period of 48 hrs or until the 115- or 24-v power is interrupted.

**NOTE:** Look into blower access door sight glass for current LED status. Removing blower access door will open blower access door switch and terminate 115-v power to control, and status code will be erased.

1. To retrieve status code, proceed with the following:

**NOTE:** NO thermostat signal may be present at control, and all blower-OFF delays must be completed.

    a. Leave 115-v power to furnace turned on.
    b. Look into blower access door sight glass for current LED status.

**NOTE:** Leave blower access panel installed to maintain power to control to view current LED status.

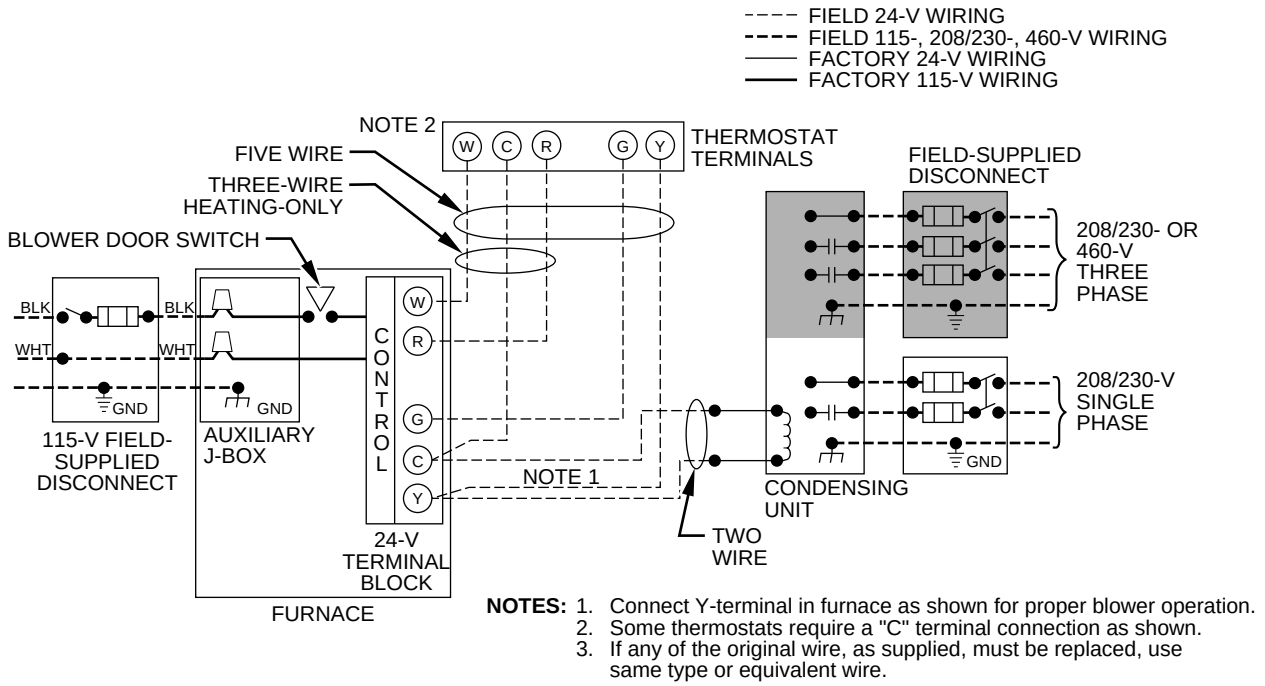


**Fig. 10—Heating and Cooling Application Wiring Diagram**

c. Remove control access door.

d. BRIEFLY remove either wire from the main limit switch until LED goes out, then reconnect it.

**NOTE:** If wire to main limit is disconnected longer than 4 sec, main blower starts, and retrieval request is ignored.

2. When above items have been completed, the following will occur:

   a. LED flashes a status code 4 times. Record this status code for further troubleshooting.

   b. Inducer motor starts and continues to run the entire component test.

   c. Hot surface igniter is energized for 15 sec, then de-energized.

   d. Main blower operates at cooling speed for 10 sec, then turns off.

   e. Main blower operates at heating speed for 10 sec, then turns off.

   f. Inducer motor stops.

   Items a through e above will assist in furnace troubleshooting since all components are functionally operated except the gas valve. This procedure is also referred to as "Component Test."

3. Operate furnace through 1 heat cycle to test for proper operation and check LED status.

4. If furnace is operating properly and LED indicates proper operation, replace control access door.

5. Component Test can also be initiated by performing the following:

   a. Remove control access door.

   b. Remove blower access door.

   c. Manually close blower access door switch.

**⚠ WARNING**

Blower access door switch opens 115-v power to control. No component operation can occur. Caution must be taken when manually closing this switch for service purposes. Failure to follow this warning could result in personal injury or death.

→ d. BRIEFLY short (jumper) TEST, 3/16-in. quick-connect terminal on control (adjacent to LED diagnostic light), and COM-24V terminal on furnace thermostat connection block. (See Fig. 11.)

**NOTE:** If TEST to COM-24V terminals are jumpered longer than 2 sec, LED will flash rapidly, and test request will be ignored.

   e. Component Test will function as described in item 2 above.

   f. Check LED status.

   g. If LED status indicates proper operation, RELEASE BLOWER ACCESS DOOR SWITCH, replace blower access door, and replace control access door.

TROUBLESHOOTING

Refer to the service label. (See Fig. 13.) Pages 10 and 11 contain a troubleshooting guide. This guide can be a useful tool in isolating furnace operation problems. Beginning with the word "Start," answer each question and follow the appropriate arrow to the next item.

The guide will help to identify the problem or failed component. After replacing any component, verify correct operation sequence.

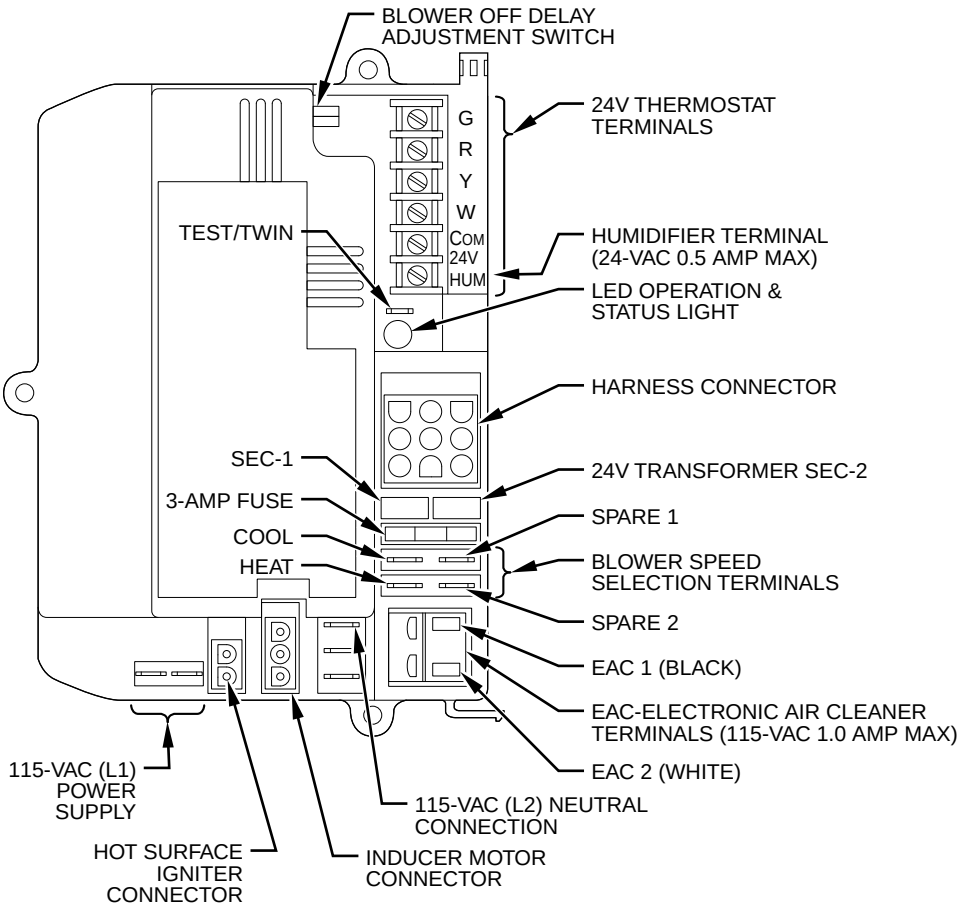


A99258

**Fig. 11—Furnace Control**

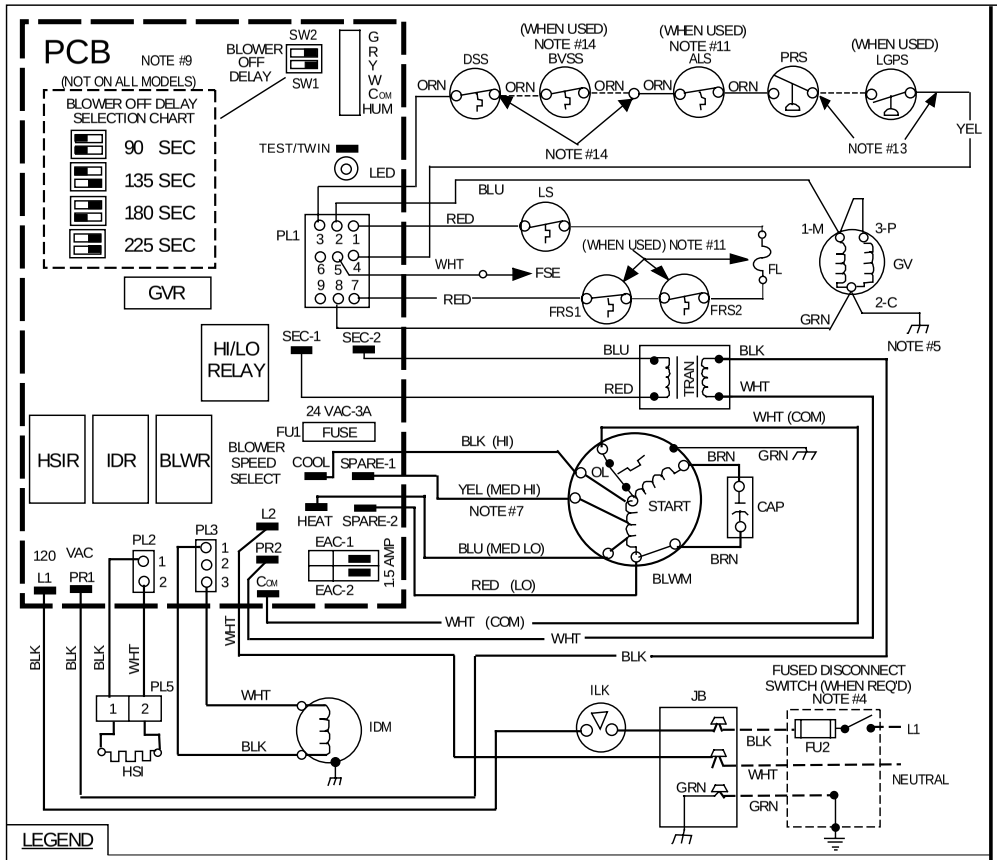


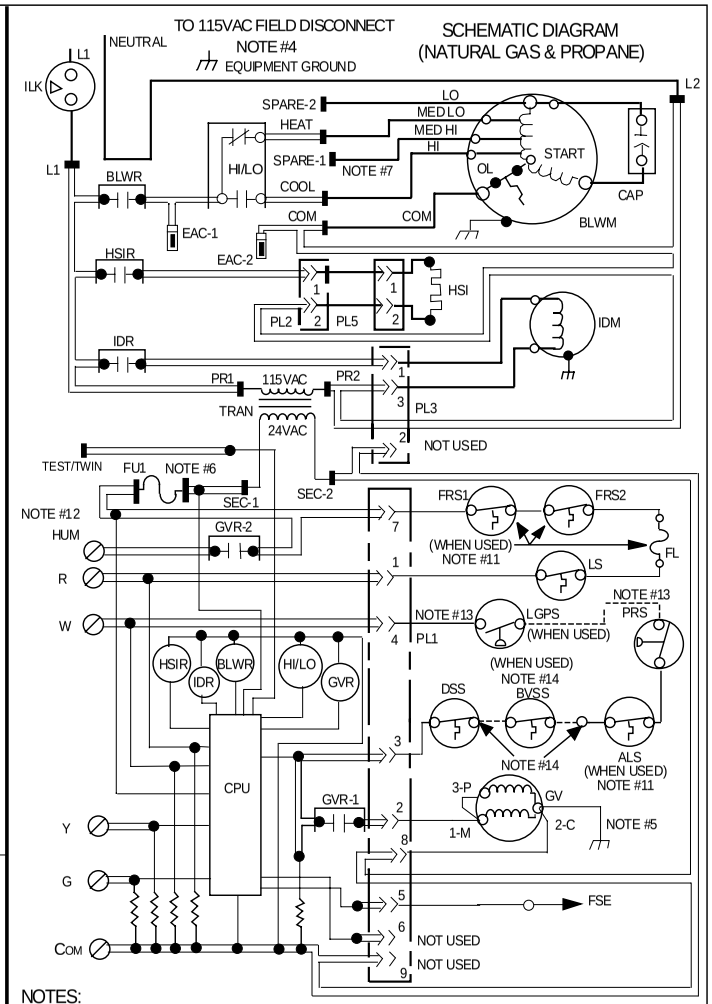


## LEGEND

| | |
|---|---|
| ALS | AUXILIARY LIMIT SWITCH, OVERTEMP. -MANUAL RESET, SPST-(N.C.) |
| BLWR | BLOWER MOTOR RELAY, SPST-(N.O.) |
| BLWM | BLOWER MOTOR |
| BVSS | BLOCKED VENT SHUTOFF SWITCH, SPST - (N.C.) |
| CAP | CAPACITOR |
| CPU | MICROPROCESSOR AND CIRCUITRY |
| DSS | DRAFT SAFEGUARD SWITCH |
| EAC-1 | ELECTRONIC AIR CLEANER CONNECTION (115 VAC 1.5 AMP MAX.) |
| EAC-2 | ELECTRONIC AIR CLEANER CONNECTION (COMMON) |
| FL | FUSIBLE LINK |
| FRS | FLAME ROLLOUT SW. -MANUAL RESET, SPST-(N.C.) |
| FSE | FLAME PROVING ELECTRODE |
| FU1 | FUSE, 3 AMP, AUTOMOTIVE BLADE TYPE, FACTORY INSTALLED |
| FU2 | FUSE OR CIRCUIT BREAKER CURRENT INTERRUPT DEVICE (FIELD INSTALLED & SUPPLIED) |
| GV | GAS VALVE-REDUNDANT OPERATORS |
| GVR | GAS VALVE RELAY, DPST-(N.O.) |
| HI/LO | BLOWER MOTOR SPEED CHANGE RELAY, SPDT |
| HSI | HOT SURFACE IGNITOR (115 VAC) |
| HSIR | HOT SURFACE IGNITOR RELAY, SPST-(N.O.) |
| HUM | 24VAC HUMIDIFIER CONNECTION (.5 AMP. MAX.) |
| IDM | INDUCED DRAFT MOTOR |
| IDR | INDUCED DRAFT RELAY, SPST-(N.O.) |
| ILK | BLOWER ACCESS PANEL INTERLOCK SWITCH, SPST-(N.O.) |
| JB | JUNCTION BOX |
| LED | LIGHT-EMITTING DIODE FOR STATUS CODES |
| LGPS | LOW GAS PRESSURE SWITCH, SPST-(N.O.) |
| LS | LIMIT SWITCH, AUTO RESET, SPST(N.C.) |
| OL | AUTO-RESET INTERNAL MOTOR OVERLOAD TEMP. SW. |
| PCB | PRINTED CIRCUIT BOARD |
| PL1 | 9-CIRCUIT CONNECTOR |
| PL2 | 2-CIRCUIT PCB CONNECTOR |
| PL3 | 3-CIRCUIT IDM CONNECTOR |
| PL5 | 2-CIRCUIT HSI/PCB CONNECTOR |
| PRS | PRESSURE SWITCH, SPST-(N.O.) |
| TEST/TWIN | COMPONENT TEST & TWIN TERMINAL |
| TRAN | TRANSFORMER-115VAC/24VAC |
| ● | JUNCTION |
| ○ | UNMARKED TERMINAL |
| ▬ | PCB TERMINAL |
| ——— | FACTORY WIRING (115VAC) |
| ——— | FACTORY WIRING (24VAC) |
| - - - | FIELD WIRING (115VAC) |
| - - - - | FIELD WIRING (24VAC) |
| ═══ | CONDUCTOR ON PCB |
| ⊘ | FIELD WIRING TERMINAL |
| ⏚ | FIELD GROUND |
| ⏚ | EQUIPMENT GROUND |
| ⊕ | FIELD SPLICE |
| →⟩— | PLUG RECEPTACLE |

## NOTES:

1. If any of the original equipment wire is replaced use wire rated for 105°C.
2. Inducer (IDM) and blower (BLWM) motors contain internal auto-reset thermal overload switches (OL).
3. Blower motor speed selections are for average conditions, see installation instructions for details on optimum speed selection.
4. Use only copper wire between the disconnect switch and the furnace junction box (JB).
5. This wire must be connected to furnace sheetmetal for control to detect flame.
6. Replace only with a 3 amp fuse.
7. Yellow lead not on all motors.
8. Blower-on delay, gas heating 45 seconds, cooling or heat pump 2 seconds.
9. Blower-off delay, gas heating 90, 135, 180 or 225 seconds, cooling or heat pump 90 seconds. (135 seconds only on some models)
10. Ignition-lockout will occur after four consecutive unsuccessful trials-for-ignition. Control will auto-reset after three hours.
11. When used, auxiliary limit switch (ALS) is on some downflow models only. When used, FL is on upflow models only.
12. Some models may have spade quick connect terminals.
13. Factory connected when LGPS is not used.
14. Factory connected when BVSS is not used. BVSS used when Chimney Adapter Accessory Kit is installed.

322869-101 REV. E

A98200e

**Fig. 12—Furnace Wiring Diagram**

# TROUBLESHOOTING GUIDE

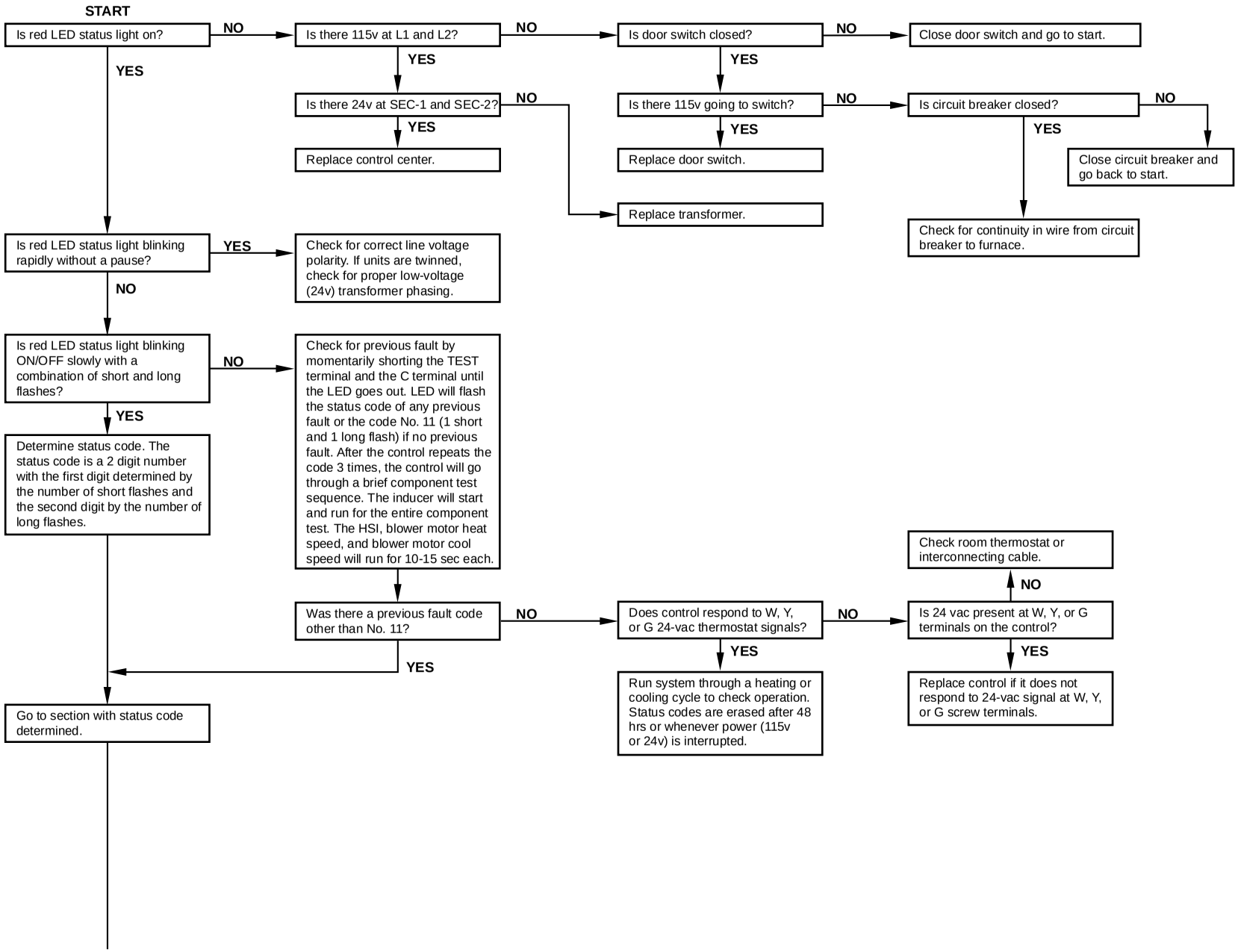

11 **NO PREVIOUS FAULT** - Faults are erased after 48 hrs or whenever power (115v or 24v) is interrupted. Run system through a heating or cooling cycle to check system.

12 **BLOWER ON AFTER POWER UP (115V OR 24V) -** Normal operation. Blower will run for 90 sec when furnace power is interrupted during a call for heat, R-W closed.

13 **LIMIT OR FLAME ROLLOUT SWITCH LOCKOUT** - Limit switch was open longer than 3 minutes. Auto-reset will occur after 3 hrs. Flame rollout switch requires manual reset.
See No. 33

14 **IGNITION LOCKOUT** - System failed to ignite gas and prove flame in 4 attempts. Control will auto-reset in 3 hrs.
See No. 34

21 **GAS HEATING LOCKOUT** - Turn off power and wait 5 minutes to retry.
Check for:
- Stuck closed gas valve relay on control.
- Miswire or short to gas valve wire.

22 **ABNORMAL FLAME PROVING SIGNAL** - Flame was sensed while gas valve was de-energized. Inducer will run until fault is cleared.
Check for:
- Stuck open gas valve solenoid or leak.
- Defective control center.

23 **PRESSURE SWITCH WILL NOT OPEN** - Check for:
- Disconnected or obstructed pressure tubing.
- Defective pressure switch.

24 **LOW-VOLTAGE FUSE IS OPEN** - Check for:
- Short in low-voltage wiring including thermostat leads shorting to ductwork or furnace cabinet. Disconnect thermostat leads to isolate short circuit.

31 **PRESSURE SWITCH WILL NOT CLOSE OR REOPEN** - If open longer than 5 minutes, inducer shuts off for 15 minutes before retry.
Check for:
- Proper vent sizing or pitch or sag.
- Vent restrictions or high winds.
- Defective inducer motor.
- Low line voltage (115v).
- Motor start capacitor.
- Low inlet gas pressure.
- Defective pressure switch or connections. If it opens after trial for ignition period, blower will come on for 90 sec recycle delay.
- Inadequate combustion air.

33 **LIMIT OR FLAME ROLLOUT SWITCH IS OPEN** - If limit switch is open longer than 3 minutes, code changes to No. 13.
Check for:
- Blower motor failure.
- Motor start capacitor.
- Open flame rollout switch, manual reset.
- Inadequate combustion air supply (flame rollout switch only).
- Dirty filter.
- Defective limit switch or connections.
- Loose blower wheel.

34 **IGNITION PROVING FAILURE** - If flame is not sensed during the trial for ignition period, the control will repeat the ignition sequence 3 more times before going into lockout, No. 14.
If flame signal is lost after trial for ignition period, blower will come on for 90-sec recycle delay.
Check for the following items first before proceding to the next step.
- Gas valve turned off.
- Manual shut-off valve.
- Green wire must be connected to furnace sheet metal.

To determine whether the problem is in the gas valve, ignitor, or flame sensor, the system can be operated in the component test mode to check the ignitor. First, remove the R thermostat connection from the control center and initiate the component test sequence. Does the ignitor glow orange/white hot by the end of the 17-sec warm-up period?

**NO** → Unplug ignitor harness from control center and inititate another component test sequence. Check for 115v between pins 1 and 2 on the control center. Was 115v present for the 17-sec period?

- **NO** → Replace control center.
- **YES** → Check for continuity in the harness and ignitor. Replace defective component.

**YES** → Reconnect the R thermostat lead and set thermostat to call for heat. Connect voltmeter across gas valve connections. Does gas valve receive 24v?

- **NO** → Check connections. If OK, replace control center.
- **YES** → Does gas valve open and allow gas to flow?
  - **NO** → Check that all gas valves are turned on. Replace valve.
  - **YES** → Do main burners ignite?
    - **NO** → Check for:
      - Inadequate flame carryover on rough ignition.
      - Low inlet gas pressure.
    - **YES** → Do main burners stay on?
      - **YES** → Allow blower to come on and repeat test to check for intermittent operation.
      - **NO** → Repeat call for heat and check flame sensor current during trial for ignition period. Is the DC microamps below 0.5?
        - **NO** → Check connections and retry. If current is near typical value and control will not stay on, replace control center.
        - **YES** → Clean flame sensor with fine sandpaper and recheck current. Current is nominally 4.0 to 6.0 microamps.
          - Is current near typical value?
            - **NO** → Replace electrode.
            - **YES** → Will main burner ignite and stay on?
              - **NO** → Replace control center.
              - **YES** → Fixed.

A99123

## SERVICE

If status code recall is needed, do not remove power or blower door. Briefly remove and then reconnect one main limit wire to display stored status code.

| LED CODE | STATUS |
|---|---|
| **CONTINUOUS OFF** - | Check for 115VAC at L1 and L2, and 24VAC at SEC-1 and SEC-2. |
| **CONTINUOUS ON** - | Control has 24VAC power. |
| **RAPID FLASHING** - | Line voltage (115VAC) polarity reversed. If twinned, refer to twinning kit instructions. |

EACH OF THE FOLLOWING STATUS CODES IS A TWO DIGIT NUMBER WITH THE FIRST DIGIT DETERMINED BY THE NUMBER OF SHORT FLASHES AND THE SECOND DIGIT BY THE NUMBER OF LONG FLASHES.

**11** **NO PREVIOUS CODE** - Stored status codes are erased when power (115VAC or 24VAC) to control is interrupted or 48 hours after each fault is cleared.

**12** **BLOWER ON AFTER POWER UP** (115VAC or 24 VAC) - Blower runs for 90 seconds, if unit is powered up during a call for heat (R-W closed).

**13** **LIMIT OR FLAME ROLL-OUT SWITCH LOCKOUT** - Control will auto reset after three hours. Reset switch or replace fuse link. Refer to #33.

**14** **IGNITION LOCKOUT** - Control will auto-reset after three hours. Refer to #34.

**21** **GAS HEATING LOCKOUT** - Control will NOT auto reset.
Check for: - Mis-wired gas valve -Defective control (Valve relay)

**22** **ABNORMAL FLAME-PROVING SIGNAL** - Flame is proved while gas valve is de-energized. Inducer will run until fault is cleared.
Check for: - Leaky gas valve - Stuck-open gas valve

**23** **PRESSURE SWITCH DID NOT OPEN** - Check for:
- Obstructed pressure tubing. - Pressure switch stuck closed.

**24** **SECONDARY VOLTAGE FUSE IS OPEN**
Check for: - Short circuit in secondary voltage (24VAC) wiring.

**31** **PRESSURE, DRAFT SAFEGUARD, AUX-LIMIT SWITCH** (when used*) **OR BLOCKED VENT SWITCH** (when used) **DID NOT CLOSE OR REOPENED (DOWNFLOW ONLY*)** If open longer than five minutes, inducer shuts off for 15 minutes before retry. Check for:
- Low inducer voltage (115VAC)
*- Defective Blower motor or capacitor
- Defective pressure switch
- Inadequate combustion air supply
- Disconnected or obstructed pressure tubing
- Proper vent sizing
- Defective inducer motor
- Restricted vent
- Excessive wind

If it opens after trial for ignition period, blower will come on for 90 second recycle delay.

**33** **LIMIT OR FLAME ROLL-OUT SWITCH IS OPEN** - If open longer than three minutes, code changes to #13. Flame roll-out switch requires manual reset.
Check for: - Defective blower motor or capacitor.
- Dirty filter or restricted duct system.
- Loose blower wheel.
- Defective switch or connections.
- Inadequate combustion air supply (Flame Roll-out Switch or fuse link open).
- Open Flame Roll-out Switch, or fuse link. Manual reset or replace.

**34** **IGNITION PROVING FAILURE** - Control will try three more times before lockout #14 occurs. If flame signal lost after trial for ignition period, blower will come on for 90 second recycle delay. Check for:
- Oxide buildup on flame sensor (clean with fine steel wool).
- Proper flame sense microamps (.5 microamps D.C. min., 4.0 - 6.0 nominal).
- Gas valve defective or gas valve turned off.
- Defective Hot Surface Ignitor
- Low inlet gas pressure.
- Manual valve shut-off.
- Control ground continuity
- Green wire **MUST** be connected to furnace sheet metal.
- Inadequate flame carryover or rough ignition.
- Flame sensor must be ungrounded.

## COMPONENT TEST

To initiate the component test sequence, shut OFF the room thermostat or disconnect the "R" thermostat lead. Briefly short the TEST terminal to the "Com 24V" terminal. Status LED will flash code and then turn ON the inducer motor. The inducer motor will run for the entire component test. The hot surface ignitor, blower motor-heat speed, and blower motor-cool speed will be turned ON for 10-15 seconds each. Gas Valve and Humidifier will not be turned on.

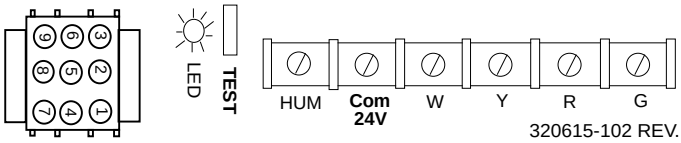


320615-102 REV. K (LIT)

A99233

**Fig. 13—Service Label**

Copyright 1999 CARRIER Corp. • 7310 W. Morris St. • Indianapolis, IN 46231 58wz8sm

**Manufacturer reserves the right to discontinue, or change at any time, specifications or designs without notice and without incurring obligations.**