Installation Instructions

Twinning Kit For HSI Single- and 2-Speed Upflow Non-Condensing and Single-Speed Condensing Gas Furnaces

KGATW0401HSI

NOTE: Read the entire instruction manual before starting the installation.

This symbol → indicates a change since the last issue.

INDEX

SAFETY CONSIDERATIONS....2
ELECTROSTATIC DISCHARGE (ESD) PRECAUTIONS....2
INTRODUCTION....2
DESCRIPTION AND USAGE....3
INSTALLATION....3-31
SECTION I: Models 58PAV, 58WAV, 383KAV, 395CAV, 480BAV, GB1AAV, and PG8UAA Upflow Single-Speed Non-Condensing HSI Furnaces....4-13
Install Furnaces....4-5
Connect Electrical Components—Heating....5-8
Connect Electrical Components—Cooling....8
Venting....8-9
Gas Supply Piping....9
Electrical Supply Connections....9-10
Start-Up and Adjustment....10-11
Sequence of Operation....11
Connection Diagram for Twinned Single-Speed Non-Condensing Furnaces....12
Schematic Diagram for Twinned Single-Speed Non-Condensing Furnaces....13
SECTION II: Models 58TUA, 58UXT, 330AAV, and 330JAV Upflow 2-Speed Non-Condensing HSI Furnaces....14-21
Install Furnaces....14-15
Connect Electrical Components—Heating....15-16
Connect Electrical Components—Cooling....16
Venting....16
Gas Supply Piping....16
Electrical Supply Connections....16-17
Start-Up and Adjustment....18
Sequence of Operation....19
Connection Diagram for Twinned 2-Speed Non-Condensing Furnaces....20
Schematic Diagram for Twinned 2-Speed Non-Condensing Furnaces....21
SECTION III: Models 58MCA, 58MSA, 58MXA, 340MAV, 345MAV, 350MAV, 490AAV, and PG9MAA Upflow Single-Speed Condensing HSI Furnaces....22-31
Install Furnaces....22
Connect Electrical Components—Heating....22-26
Connect Electrical Components—Cooling....26
Venting....26-27
Gas Supply Piping....28
Condensate Drain Connections....28
Electrical Supply Connections....28
Start-Up and Adjustment....29
Sequence of Operation....29
Connection Diagram for Twinned Single-Speed Condensing Furnaces....30
Schematic Diagram for Twinned Single-Speed Condensing Furnaces....31

Form: AG-GATW-08 Cancels: AG-GATW-07 Printed in U.S.A. 4-97 Catalog No. 63GA-TW1

SAFETY CONSIDERATIONS

Installing and servicing of heating equipment can be hazardous due to gas and electrical components. Only trained personnel should install or service heating equipment.

Untrained personnel can perform basic maintenance such as cleaning and replacing filters. All other operations should be performed by trained service personnel. When working on heating equipment, observe precautions in the literature, on tags, and on labels attached to the unit.

Follow all safety codes. Wear safety glasses and work gloves. Have a fire extinguisher available.

Recognize safety information. This is the safety-alert symbol ⚠ . When you see this symbol on the furnace and in instructions or manuals, be alert to the potential for personal injury.

Understand the signal words DANGER, WARNING, and CAUTION. These words are used with the safety-alert symbol. DANGER identifies the most serious hazards which **will** result in severe personal injury or death. WARNING signifies a hazard which **could** result in personal injury or death. CAUTION is used to identify unsafe practices which **would** result in minor personal injury or product and property damage.

⚠ CAUTION: Label all wires prior to disconnection when servicing controls. Wiring errors can cause improper and dangerous operation.

ELECTROSTATIC DISCHARGE (ESD) PRECAUTIONS

⚠ CAUTION: Electrostatic discharge can affect electronic components. Take precautions during furnace installation and servicing to protect the furnace electronic control. Precautions will prevent electrostatic discharges from personnel and hand tools which are held during the procedure. These precautions will help to avoid exposing the control to electrostatic discharge by putting the furnace, the control, and the person at the same electrostatic potential.

---

1. Disconnect all power to the furnace. DO NOT TOUCH THE CONTROL OR **ANY** WIRE CONNECTED TO THE CONTROL PRIOR TO DISCHARGING YOUR BODY'S ELECTROSTATIC CHARGE TO GROUND.
2. Firmly touch a clean, unpainted, metal surface of the furnace chassis which is close to the control. Tools held in a person's hand during grounding will be satisfactorily discharged.
3. After touching the chassis you may proceed to service the control or connecting wires as long as you do nothing that recharges your body with static electricity (for example; DO NOT move or shuffle your feet, DO NOT touch ungrounded objects, etc.).
4. If you touch ungrounded objects (recharge your body with static electricity), firmly touch furnace again before touching control or wires.
5. Use this procedure for installed and uninstalled (ungrounded) furnaces.
6. Before removing a new control from its container, discharge your body's electrostatic charge to ground to protect the control from damage. If the control is to be installed in a furnace, follow items 1 through 5 before bringing the control or yourself into contact with the furnace. Put all used AND new controls into containers before touching ungrounded objects.
7. An ESD service kit (available from commercial sources) may also be used to prevent ESD damage.

INTRODUCTION

IMPORTANT: Only the furnace sizes listed in Tables 2, 3, and 4 can be twinned. Both furnaces must have the same product number, including heating and cooling sizes, to achieve correct operation.

This furnace twinning kit Part No. KGATW0401HSI permits connection of 2 upflow, single-speed, non-condensing furnaces (See Fig. 1 and 2.); 2 upflow, 2-speed, non-condensing, furnaces (See Fig. 1 and 12.); or 2 upflow, single-speed, condensing furnaces (See Fig. 17 and 18.) to operate as a single unit on the same duct work. The kit is applicable only to upflow furnaces listed in Tables 2, 3, and 4. A single non-condensing furnace shall NOT be twinned with a single condensing furnace or with a non-condensing furnace with a different number of speeds. Variable-speed furnaces shall not be twinned.

DESCRIPTION AND USAGE

This twinning kit is designed for use in 2 upflow, single-speed, non-condensing, hot surface ignition (HSI) furnaces as shown in Table 2; 2 upflow, 2-speed, non-condensing, HSI furnaces as shown in Table 3; or 2 upflow, single-speed, condensing HSI furnaces as shown in Table 4. Refer to the appropriate section for your furnaces.

→ SECTION I: Models 58PAV, 58WAV, 383KAV, 395CAV, 480BAV, GB1AAV, and PG8UAA Upflow Single-Speed Non-Condensing HSI Furnaces

- Single-Stage Heat with Single-Stage Gas-Heat Thermostat
- Two-Stage Heat with 2-Stage Gas-Heat Thermostat

SECTION II: Models 58TUA, 58UXT, 330AAV, and 330JAV Upflow 2-Speed Non-Condensing HSI Furnaces

- Two-Stage Heat with Single-Stage Gas-Heat Thermostat
- Two-Stage Heat with 2-Stage Gas-Heat Thermostat

→ SECTION III: Models 58MCA, 58MSA, 58MXA, 340MAV, 345MAV, 350MAV, 490AAV, and PG9MAA Upflow Single-Speed Condensing HSI Furnaces

- Single-Stage Heat with Single-Stage Gas-Heat Thermostat
- Two-Stage Heat with 2-Stage Gas-Heat Thermostat

The furnaces must be installed to ensure sufficient return air. A combination of 1 full side and bottom inlet plenum or bottom only inlet plenum shall be used for return air to each furnace. The preferred method is to have all return air brought into the bottom of the furnaces through a common bottom plenum. The bottom return-air plenum shall be at least as high as the width of the furnace bottom return-air opening. When there are height limitations, the bottom return-air plenum height can be reduced to 8 in. minimum if 1 entire side return-air opening of each furnace is used in conjunction with the bottom return opening. Rear inlet plenums shall not be used. (See Fig. 2, 12, or 17.)

⚠ WARNING: Do not remove the center return-air partitions between the furnaces. Failure to follow this warning could result in improper auxiliary limit operation, fire, personal injury, or death.

Staged heating operation is permitted only with this twinning kit. With the 2-speed, non-condensing furnaces, low-gas heat in both furnaces is used for first-stage heat, and high-gas heat in both furnaces is used for second-stage heat. With the single-speed, non-condensing, and condensing furnaces, the left-hand furnace is used for first-stage heat, and both furnaces are used for second-stage heat. This kit ensures both furnace blowers operate simultaneously so air flows through the duct work rather than recirculating in a loop between the furnaces.

NOTE: As a result of staged heating with single-speed furnaces, the air temperature distribution in the supply plenum may be uneven when only 1 furnace is heating.

NOTE: Refer to the Installation, Start-Up, and Operating Instructions supplied with each furnace for information on venting, clearances, start-up, maintenance, and other information not covered in this publication.

See Table 1 for kit contents.

→ Table 1—Kit Contents

DESCRIPTION	PART NO.	QUANTITY
Foam Strip	313596-201	4
Relay and Harness Assembly (TKR)	320770-301	1
Wiring Label—Schematic Diagram (Single-Speed Non-Condensing)	322867-101	1
Wiring Label—Connection Diagram (Single-Speed Non-Condensing)	322866-101	1
Wiring Label—Schematic Diagram (2-Speed Non-Condensing)	322032-401	1
Wiring Label—Connection Diagram (2-Speed Non-Condensing)	322031-401	1
Wiring Label—Schematic Diagram (Condensing)	322865-101	1
Wiring Label—Connection Diagram (Condensing)	322864-101	1
Auxiliary Limit Switch Harness—Master Furnace (ALS-M)	320773-701	1
Auxiliary Door Switch/Limit Switch Harness—Slave Furnace (ALS-S/ILK-1)	320777-701	1
No. 6 X 3/4-in. LG Sheet Metal Screw	AL76AZ128	7
1/4-in. Quick-Connect Wire Terminal	HY60AM065	1
Wire Tie	HY76TB125	2
Snap Bushing	HY93NH070	2
Strain Relief Bushing	HW60ZW250	2
Installation Instructions	AG-GATW-08	1

INSTALLATION

NOTE: The furnace installed on the left-hand (LH) side will be referred to as the MASTER or LH furnace, and the furnace installed on the right-hand (RH) side as the SLAVE or RH furnace throughout these instructions.

→ SECTION I: MODELS 58PAV, 58WAV, 383KAV, 395CAV, 480BAV, GB1AAV, AND PG8UAA UPFLOW SINGLE-SPEED NON-CONDENSING HSI FURNACES

PROCEDURE 1—INSTALL FURNACES

Refer to Fig. 1 and 2 for appearance and dimensional drawing of twinned furnaces and their connection locations.

1. Select 2 identical heating and airflow furnaces. (See Table 2.)
2. Remove bottom closure panels from both furnaces. (See Fig. 3.)
   a. Remove 2 screws from bottom front panel.
   b. Rotate front panel downward to remove.
   c. Remove bottom closure panel and discard.
   d. Reinstall bottom front panel by reversing item 2.a. and b.
3. If return air is to enter 1 side of each furnace, cut open 1 entire return-air opening in appropriate side of each furnace. (See Fig. 2.)
4. Apply 2 factory-supplied foam strips to mating side of each furnace. Locate strips equal distance from top and bottom as shown in Fig. 4.
5. Remove gas hole closure from RH furnace only and power hole closure from LH furnace only as indicated in Fig. 2.
6. Remove 7/8-in. diameter accessory hole closures from mating sides of furnaces. (See Fig. 4.)
7. Position furnaces against each other on return-air plenum. Adjust and shim each furnace to align 7/8-in. diameter holes in both furnaces.
8. Drill two 1/8-in. holes, approximately 1 in. below discharge flange, from inside top of discharge opening and through both furnaces. (See Fig. 5.)
9. Drive 1 factory-supplied No. 6 X 3/4-in. LG screw through each hole and tighten until furnaces are secure and foam strips have sealed gap between furnaces.
10. Insert 1 snap bushing through each adjoining accessory hole of each furnace.
11. Remove 7/8-in. diameter knockout from blower shelf of LH furnace near front right corner.
12. Insert 1 strain relief bushing through blower shelf hole.
13. Connect return- and supply-air ducts to furnaces. Seal duct connections to prevent air leakage.

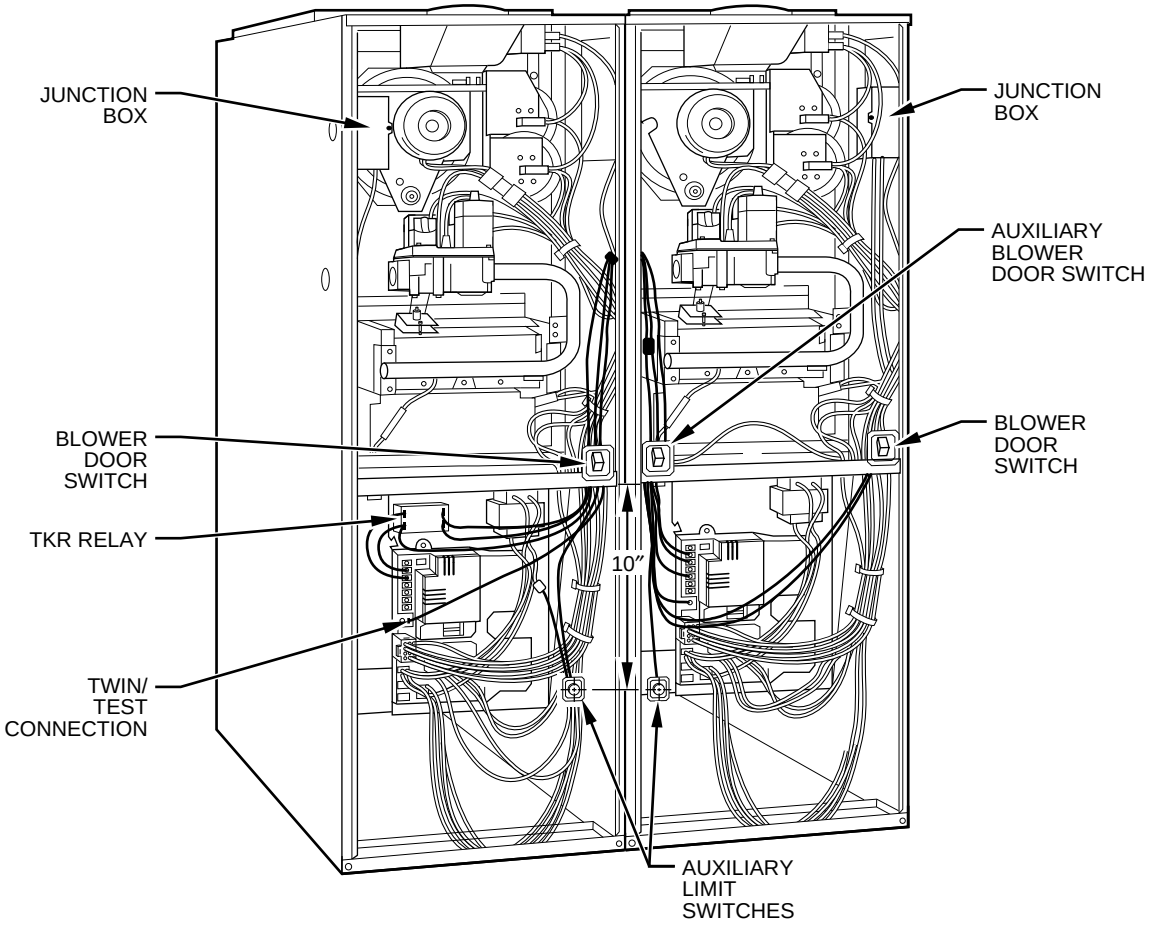

NOTE: Two-speed units shown. Single-speed units have only 1 pressure switch and appearance of control will differ.

Fig. 1—Twinning Kit Installed On Non-Condensing Furnaces

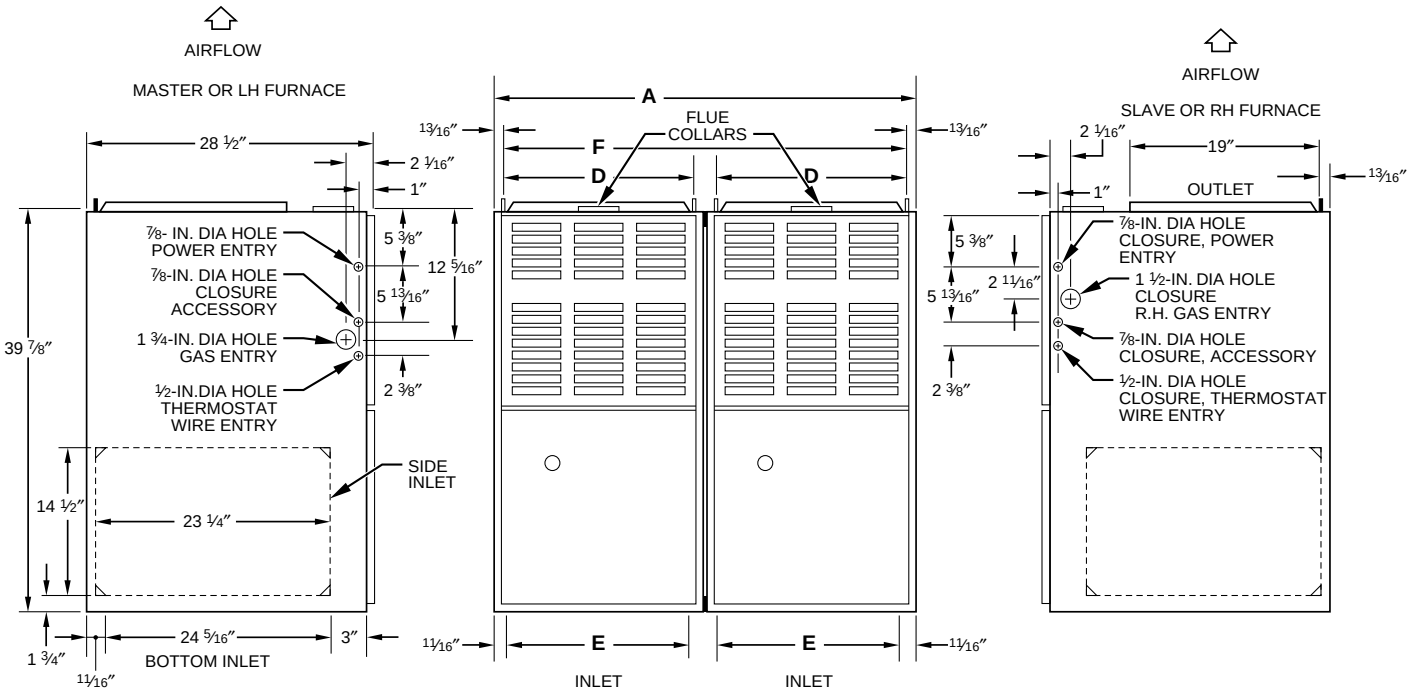

Fig. 2—Dimensional Drawing For Twinned Single-Speed Non-Condensing Furnaces

→ Table 2—58PAV, 58WAV, 383KAV, 395CAV, 480BAV, GB1AAV, and PG8UAA Single-Speed Non-Condensing Furnace Dimensions (In.)

INPUT HEATING SIZE (BTUH)	NOMINAL COOLING SIZE (BTUH)	A	D	E	F
88,000	48,000	42-5/16	19-3/8	19-1/2	40-11/16
110,000	48,000	42-5/16	19-3/8	19-1/2	40-11/16
110,000	60,000	49-5/16	22-7/8	23	47-11/16
132,000	48,000	42-5/16	19-3/8	19-1/2	40-11/16
132,000	60,000	49-5/16	22-7/8	23	47-11/16
154,000	60,000	49-5/16	22-7/8	23	47-11/16

NOTE: This kit applies to the above furnaces with date codes of 1594 and later.

14. Move 115-v junction box JB in LH furnace from right-hand side to left-hand side. For models produced before January 1995, blower door switch ILK in LH furnace must also be moved from right-hand side to left-hand side.

⚠ WARNING: DO NOT use the back of the furnace for return-air duct connections as limit cycling will occur. A failure to follow this warning can cause a fire, personal injury, or death.

PROCEDURE 2—CONNECT ELECTRICAL COMPONENTS—HEATING

⚠ WARNING: Make no connections between the R 24-vac connector in 1 furnace and the R 24-vac connector in other furnace. Failure to follow this warning can cause a fire, personal injury, or death.

See electrostatic discharge precaution on page 2.

1. Remove control doors and blower access doors from both furnaces.

→ 2. Install twinning kit relay (TKR) and harness assembly.

The twinning kit can be used for single-stage or 2-stage heating operation.

Single-Stage Heat with Single-Stage Gas-Heat Thermostat (Field Supplied)

NOTE: This application allows both furnaces to operate as 1 furnace in gas heat mode as determined by single-stage thermostat operation. Both furnaces operate in heating mode simultaneously. See furnace Installation, Start-Up, and Operating Instructions for further details on this heating mode.

a. Secure relay of TKR assembly to LH furnace control mounting bracket using 2 factory-supplied No. 6 X 3/4-in. LG screws. See Fig. 6 for location of holes to be drilled.

NOTE: See Fig. 7.

b. Connect TKR white wire labeled W from TKR to LH furnace control thermostat connection W.

c. Connect TKR black wire labeled C from TKR to LH furnace control thermostat connection COM 24V.

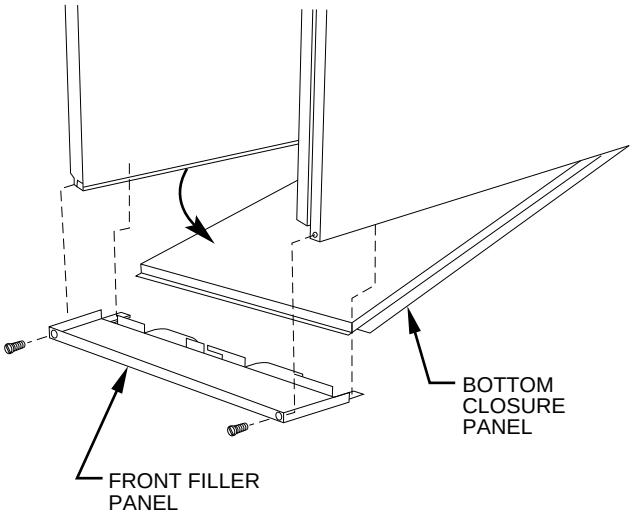

A93047

Fig. 3—Removing Bottom Closure Panel

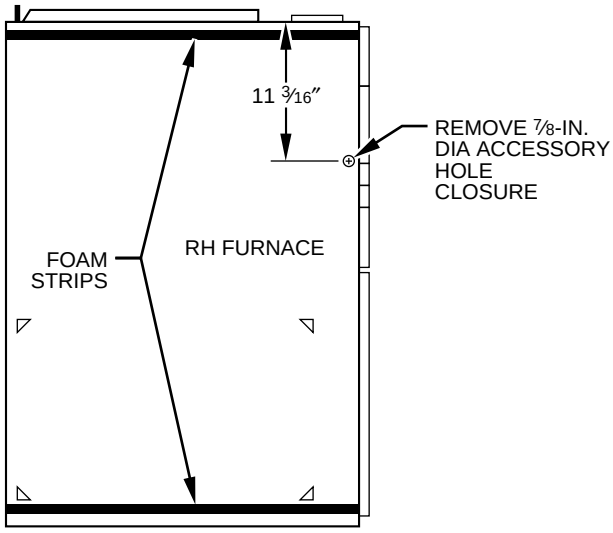

A93533

Fig. 4—Location of Foam Strips and Holes for Removal

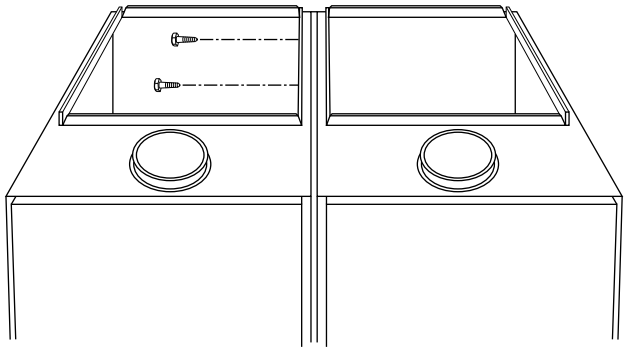

A91166

Fig. 5—Attaching Furnaces Together

d. Connect TKR yellow wire labeled TEST/TWIN (loose wire end near TKR relay) to LH furnace control TEST/TWIN terminal.

e. Route remaining 4 loose TKR wires through:

(1.) Strain relief bushing previously installed in 7/8-in. hole in right-hand side of blower shelf.

(2.) Gas control compartment of LH furnace.

(3.) Snap bushings previously installed between furnaces. (See Fig. 4.)

f. Connect TKR red wire labeled R-SLAVE from TKR to RH furnace control thermostat connection R.

g. Connect TKR white wire labeled W-SLAVE from TKR to RH furnace control thermostat connection W.

h. Connect TKR black wire labeled C-SLAVE from TKR to RH furnace control thermostat connection COM 24V.

i. Connect TKR yellow wire labeled TEST SLAVE from LH furnace control TEST terminal to RH furnace control TEST terminal.

NOTE: ALL thermostat connections are to be made to LH furnace control ONLY. (See Fig. 7.)

Two-Stage Heat with 2-Stage Gas-Heat Thermostat (Field Supplied)

NOTE: This application allows only the LH furnace to operate for first-stage heat mode or both furnaces to operate for second-stage heat mode as determined by a 2-stage thermostat. See furnace Installation, Start-Up, and Operating Instructions for further details on this heating mode.

To operate furnaces in 2-stage heating mode when a 2-stage thermostat controls the staging, install TKR as described above then modify TKR wiring as follows:

⚠ **CAUTION: Supply-air temperature will be uneven left-to-right when only master system is operating.**

NOTE: See Fig. 8.

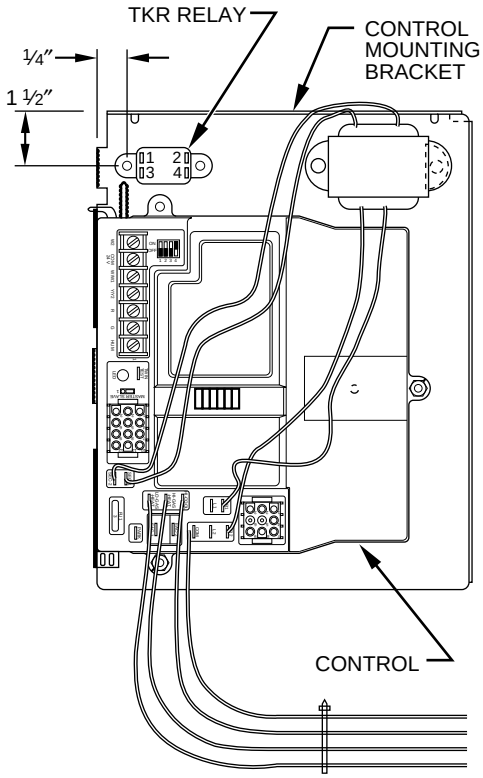

A93535

Fig. 6—Twinning Kit Relay Mounted On Control Mounting Bracket For LH Furnace (Two-Stage Control Shown)

a. Disconnect TKR white wire labeled W from the LH furnace control thermostat connection W.

b. Cut off terminal of TKR white wire labeled W and strip 1/4 in.

c. Connect 2-stage thermostat W2 connection to TKR white wire labeled W.

NOTE: ALL other 2-stage thermostat connections are to be made to LH furnace control ONLY. (See Fig. 8.)

3. Install LH furnace auxiliary limit switch harness ALS-M.

NOTE: LH furnace ALS-M assembly DOES NOT include door switch.

a. Drill 1/8-in. hole in blower housing 10 in. below blower shelf. (See Fig. 1.)

b. Position ALS-M so reset button faces front of furnace.

c. Secure bracket to blower housing using factory-supplied No. 6 X 3/4-in. LG screw.

d. Disconnect red transformer wire from LH furnace control SEC-1 connection.

e. Cut off the 3/16-in. quick-connect terminal from red transformer wire.

f. Strip the red wire 1/8 in. and secure the factory-supplied 1/4-in. quick-connect terminal.

g. Connect red transformer wire connector to ALS-M wire connector PL7 labeled TRANS ASSY.

h. Connect ALS-M wire connector labeled DOOR SWITCH or SEC 1 to LH furnace control SEC-1 terminal.

i. Route 2-wire ALS-M connector PL6 through:

(1.) Strain relief bushing previously installed in 7/8-in. hole in right-hand side of blower shelf.

(2.) Gas control compartment of LH furnace.

(3.) Snap bushings previously installed between furnaces into gas control compartment of RH furnace.

4. Install RH furnace auxiliary door switch and auxiliary limit switch harness ALS-S/ILK-1.

NOTE: RH furnace (SLAVE) auxiliary limit switch harness assembly ALS-S/ILK-1 has door switch included.

a. Drill 1/8-in. hole in blower housing 10 in. below blower shelf. (See Fig. 1.)

b. Position ALS-S with terminals facing front of furnace.

c. Secure bracket to blower housing using factory-supplied No. 6 X 3/4-in. LG screw.

d. Relocate RH furnace junction box JB from left side to right side as shown in Fig. 1 if JB is not at right-hand side of RH furnace. For models produced before January 1995, blower door switch ILK must also be moved when JB changes location.

e. Position auxiliary door switch ILK-1 on left-hand side of RH furnace.

f. Secure auxiliary door switch ILK-1 using factory-supplied No. 6 X 3/4-in. LG screw.

g. Route 2-wire harness connector PL6 of ALS-S/ILK-1 assembly up through snap bushing in 7/8-in. hole in left side of blower shelf and into gas control compartment.

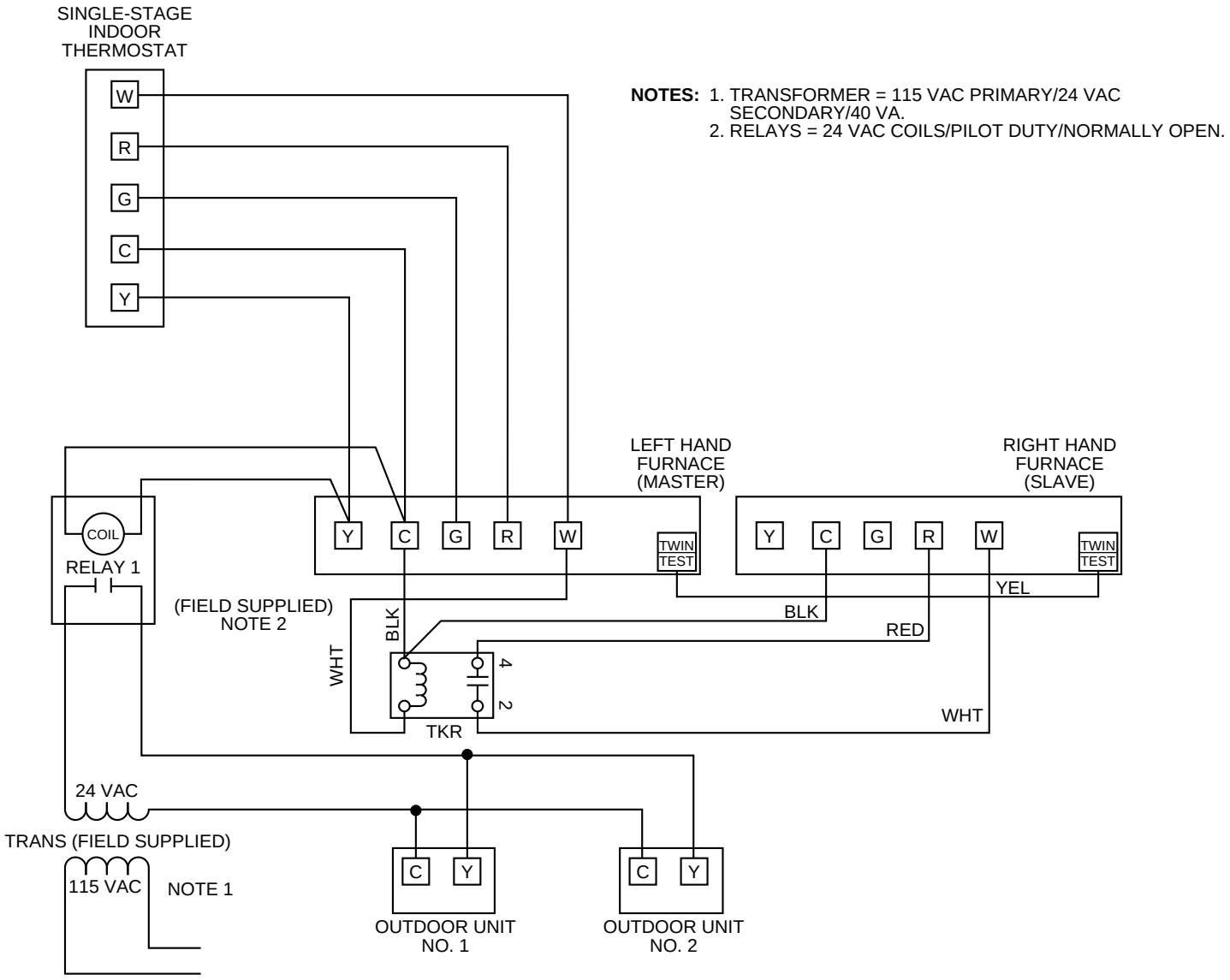

→ **Fig. 7—Twinning 2 Single-Speed Outdoor Units with 2 Single-Speed Furnaces with a Single-Stage Thermostat**

h. Connect RH ALS-S connector PL6 to LH ALS-M connector PL6 that was routed through furnace casings.

5. Select identical blower motor speed taps at control center motor connectors in both furnaces.

⚠ **CAUTION: Failure to select identical blower speed taps in both furnaces can result in overheating of furnace components and possible loss of furnace operation and damage to the furnaces.**

---

6. Dress wires to ensure they do not contact sharp or moving parts nor interfere with blower operation, removal of filters, or operation of switches.
7. Make all thermostat connections to LH furnace only.

PROCEDURE 3—CONNECT ELECTRICAL COMPONENTS—COOLING

⚠ **WARNING: Make no connections between the R 24-vac connector in 1 furnace and the R 24-vac connector in other furnace. Failure to follow this warning can cause a fire, personal injury, or death.**

When installing twinned outdoor units with twinned gas furnaces, it is necessary to use a field-supplied 24-vac pilot-duty relay and a field-supplied 24/115-vac transformer as shown in Fig. 7 or 8 to prevent overloading furnace 24/115-vac transformer.

PROCEDURE 4—VENTING

Refer to Installation, Start-Up, and Operating Instructions supplied with each furnace for venting information.

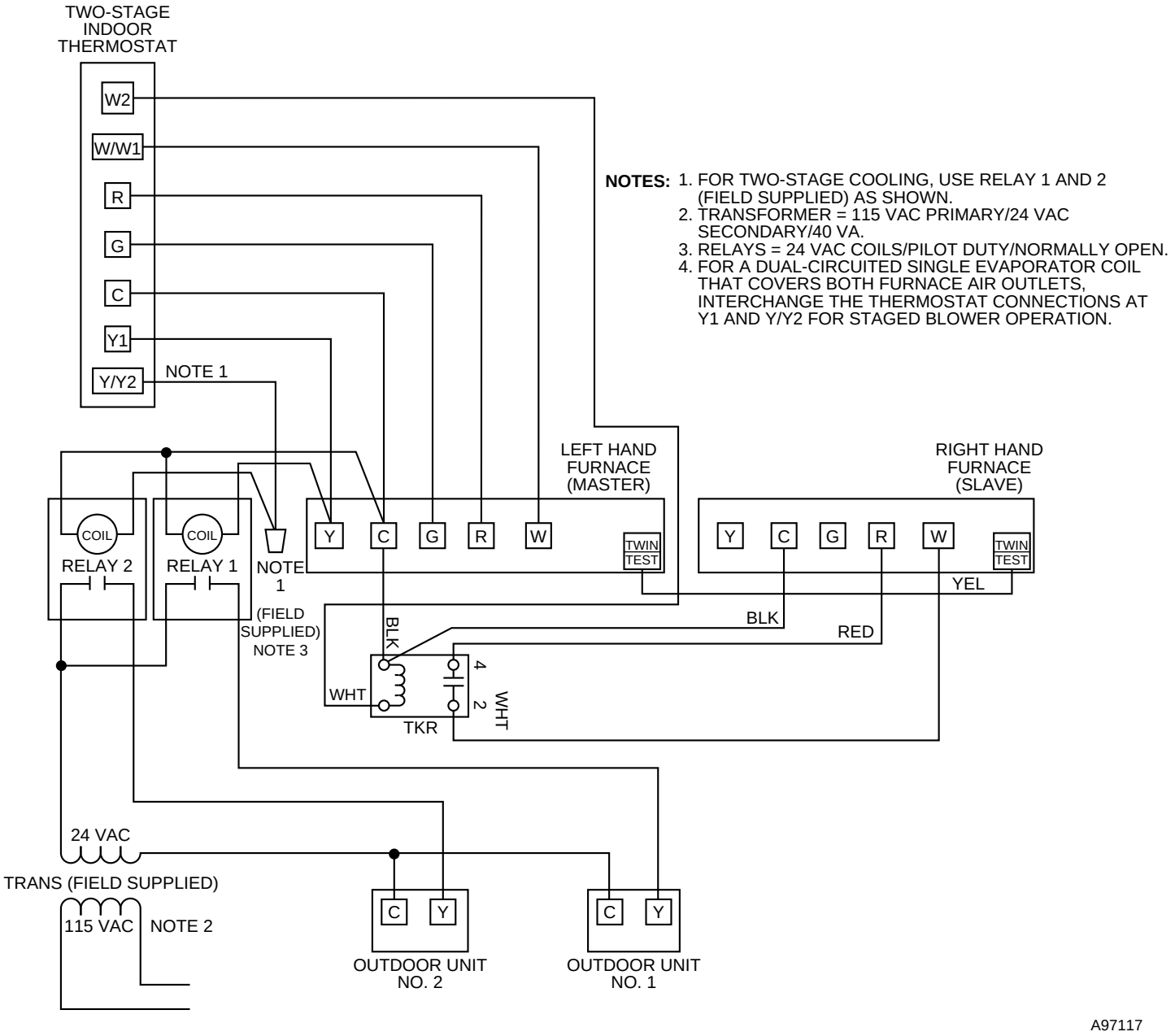

→ **Fig. 8—Twinning 2 Single-Speed Outdoor Units with 2 Single-Speed Furnaces with a 2-Stage Thermostat**

⚠ **CAUTION: When common-venting twinned, Category I (negative-pressure venting), non-condensing furnaces, excessive condensate may occur as a result of oversized vent systems. Dedicated vents and/or proper vent sizing per the furnace Installation, Start-Up, and Operating Instructions will reduce the potential for condensation.**

PROCEDURE 5—GAS SUPPLY PIPING

NOTE: All gas connections must be made through exposed outer side of each furnace. Do not common connect any connection other than supply- and return-air ducts.

Furnaces are recommended to be provided with a single shutoff valve. However, individual shutoff valves may be required by local codes or jurisdictions. Refer to Installation, Start-Up, and Operating Instructions provided with each furnace for additional gas supply information.

PROCEDURE 6—ELECTRICAL SUPPLY CONNECTIONS

NOTE: All electrical power connections must be made through exposed outer side of each furnace. Do not common connect any connection other than supply- and return-air ducts.

1. Each furnace shall be connected to its own 115-vac power supply. The twinning kit installation interconnects the furnaces, allowing them to operate as a single furnace. The L1 (black) connection to each furnace must be connected to circuit breakers connected to the same service panel 115-vac phase leg.

   On single-phase (residential) systems, each furnace circuit breaker should be located directly across from each other in service panel, or each furnace circuit breaker should be located on the same side of service panel, but must skip 1 space to be connected to the same leg of the 1-phase power supply.

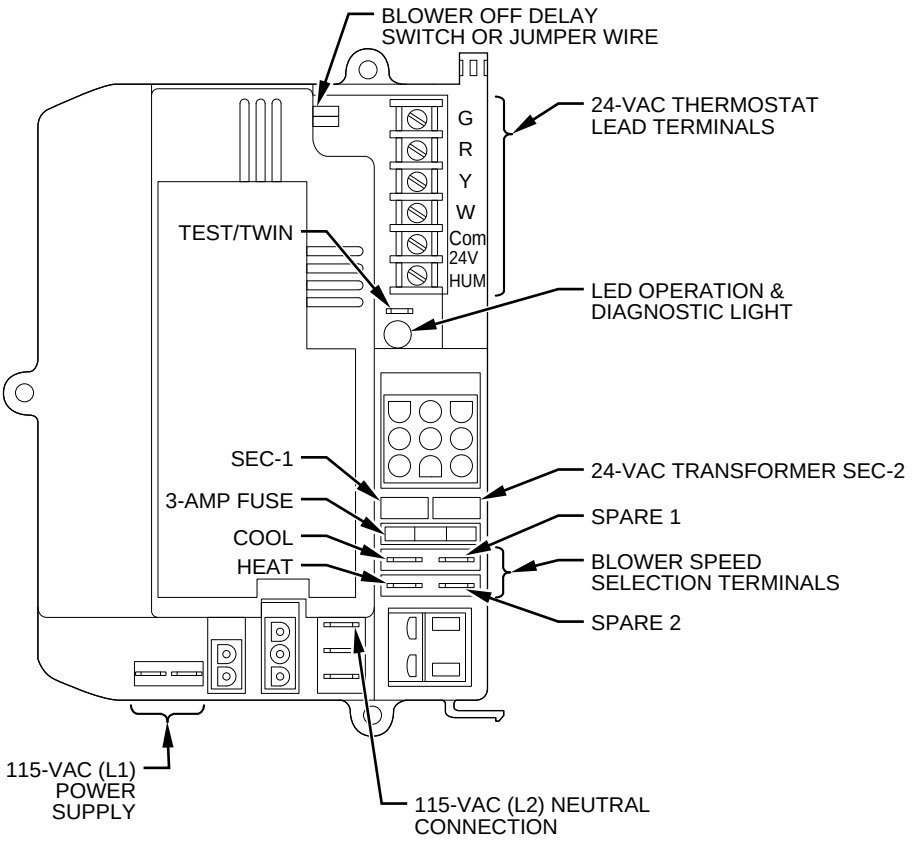

A95228

Fig. 9—Single-Stage Furnace Control

On 3-phase (commercial) systems, each furnace circuit breaker should be located directly across from each other in service panel, or each furnace circuit breaker should be located on the same side of service panel, but must skip 2 spaces to be connected to the same leg of the 3-phase power supply.

The proper 115-vac phasing of furnace connections permits 24-vac transformer phasing as described below.

2. Phasing of the connected 24-vac transformer secondary circuits can be determined with the LED status of both furnaces. See furnace Installation, Start-Up, and Operating Instructions and status code labels on blower doors. The furnaces' transformers' black leads should be connected to PR1 connectors and white leads to PR2 connectors on controls. If 1 or both LEDs are rapidly flashing, disconnect lead at TEST/TWIN terminal of LH furnace and observe LED at each furnace.

   IF:

   a. Both LEDs are on continuously:

      (1.) System phasing is okay.

      (2.) Reverse SEC-1 and SEC-2 in LH furnace.

   b. One or both LEDs are rapidly flashing:

      (1.) Line voltage polarity is reversed.

      (2.) Correct line voltage polarity on furnace(s) with rapidly flashing LED.

   c. One LED is off, 1 LED is on continuously:

      (1.) The 24-vac circuit is inoperative on furnace with LED light off.

      (2.) Check transformers, auxiliary limits, and door switches in both furnaces and correct problem.

3. Reconnect lead at TWIN/TEST terminal of LH furnace and observe LED at each furnace. The LEDs will glow steady for proper phasing.

PROCEDURE 7—START-UP AND ADJUSTMENT

Refer to Installation, Start-Up, and Operating Instructions supplied with furnaces for detailed information.

1. Shut off all power and gas to both furnaces.
2. Position blower off delay switches on controls in BOTH furnaces to SAME desired gas heat blower off delay. (See Fig. 9.) See furnace Installation, Start-Up, and Operating Instructions for further details. If 1 furnace control has blower off delay switches and the other has a fixed jumper wire which sets blower off delay at 135 sec, the control with selectable switches MUST be set for 135 sec off delay.
3. Attach twinning connection diagram label over existing wiring label on inside of LH furnace blower door.
4. Attach twinning schematic diagram label over existing wiring label on inside of RH furnace blower door.

5. Turn on power and gas to both furnaces.
6. Reinstall blower access doors on both furnaces.
7. Operate furnaces through 2 cycles in each mode to confirm correct operation by operating only thermostat.
   a. Single-stage gas heating thermostat R-to-W for gas heat. First stage of a 2-stage thermostat causes LH furnace to operate in gas-heat mode.
   b. First and second stage of 2-stage heating thermostat R-to-W/W1-and-W2 causes both furnaces to operate in gas-heat mode.
   c. Thermostat R-to-G for continuous fan or low-cooling blower.
   d. Cooling thermostat R-to-G-and-Y for single-speed cooling blower.
8. Reinstall control doors on both furnaces.
9. Instruct user in operation of furnace and thermostat.

PROCEDURE 8—SEQUENCE OF OPERATION

See Fig. 10 and 11 for single-speed non-condensing furnace twinning connection and schematic wiring diagrams while reviewing the sequence of operation.

Twinning operation is controlled by LH or MASTER furnace. The TWIN/TEST and COM 24 connection wires ensure the 2 furnaces coordinate their blower operation. When either furnace requires blower operation, both furnaces operate their blowers at the same speed. Both furnaces operate simultaneously in the same mode: heat, cool, or continuous fan. Exceptions can occur if a safety switch on either furnace is activated (such as pressure switch, flame roll-out switch, main limit switch, draft safeguard switch, twinning kit auxiliary limit switch, or flame-proving sensor). In such a case, the other furnace continues to operate unless open switch is the flame roll-out, main limit, or twinning kit auxiliary limit switch, in which case both furnaces respond.

Before performing component test, disconnect TKR yellow wire labeled TEST from LH furnace control TEST/TWIN terminal. After removing yellow wire, component test can be initiated on each furnace individually as stated in Installation, Start-Up, and Operating Instructions.

Single-Stage Heat with Single-Stage Gas-Heat Thermostat

See Section I, Procedure 2 for furnace and kit components used.

1. Single-stage thermostat causes both furnaces to operate in heating mode.
2. Operation in ALL modes is the same for twinned furnaces as for an individual furnace. See furnace Installation, Start-Up, and Operating Instructions for more information on sequence of operation.

Two-Stage Heat with 2-Stage Gas-Heat Thermostat

See Section I, Procedure 2 for furnace and kit components used.

1. The 2-stage thermostat causes the furnaces to operate in first-stage heat (LH furnace operates in heat while RH furnace blower operates but RH furnace is not heating) or causes the furnaces to operate in second-stage heat (both furnaces operate in heat), depending on whether 1 or 2 thermostat stages are calling for heat.
2. Operation in ALL modes is the same for twinned furnaces as for an individual furnace. See furnace Installation, Start-Up, and Operating Instructions for more information on sequence of operation.

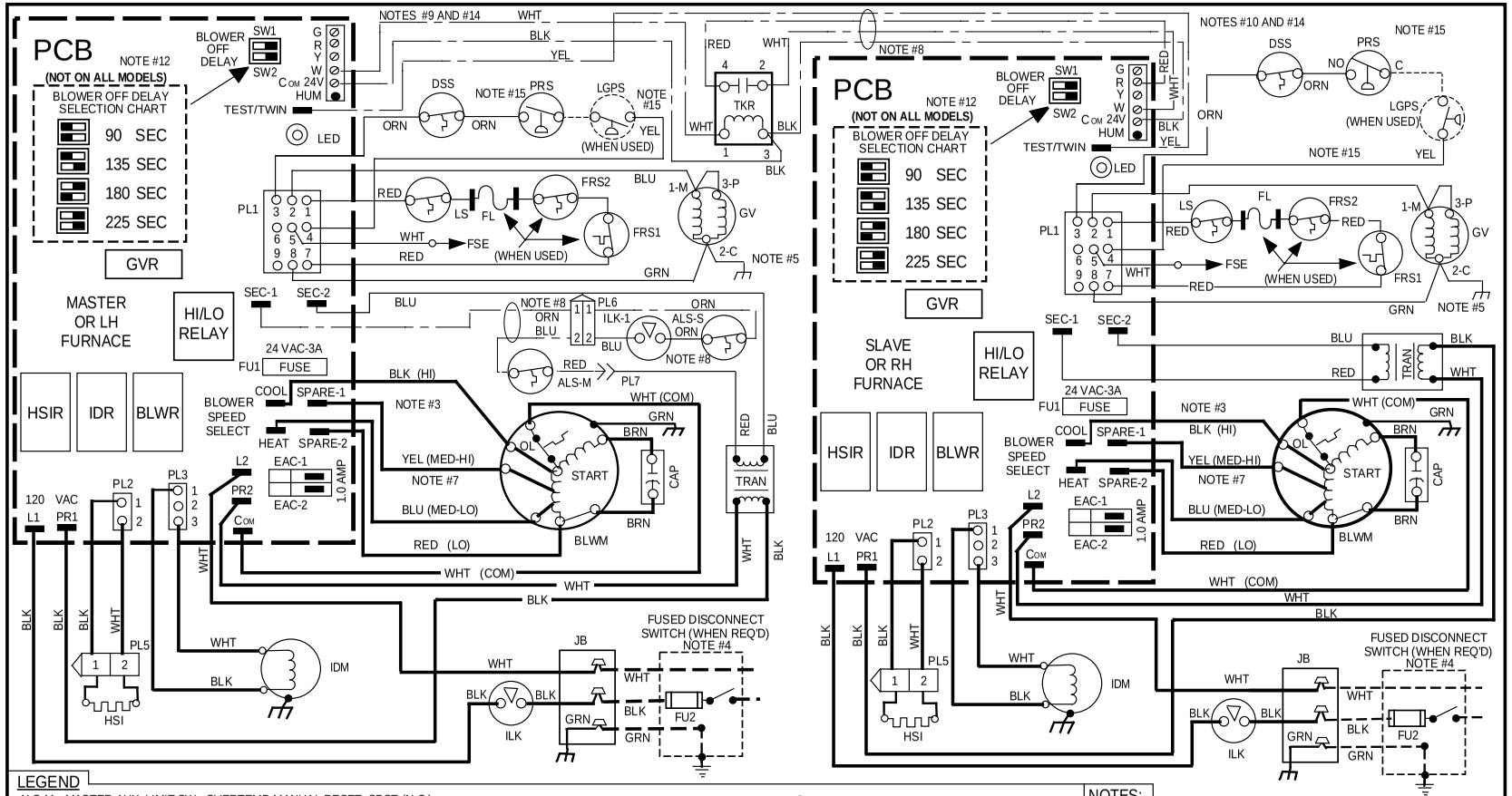

LEGEND

ALS-M	MASTER AUX. LIMIT SW., OVERTEMP-MANUAL RESET, SPST-(N.C.)
ALS-S	SLAVE AUX. LIMIT SW., OVERTEMP-MANUAL RESET, SPST-(N.C.)
BLWR	BLOWER MOTOR RELAY, SPST-(N.O.)
BLWM	BLOWER MOTOR, 3- OR 4-SPEED, PERMANENT-SPLIT-CAPACITOR
CAP	CAPACITOR
DSS	DRAFT SAFEGUARD SWITCH, AUTO-RESET, SPST-(N.C.)
EAC-1	ELECTRONIC AIR CLEANER CONNECTION (115 VAC 1.0 AMP MAX.)
EAC-2	ELECTRONIC AIR CLEANER CONNECTION (COMMON)
FL	FUSIBLE LINK
FRS	FLAME ROLLOUT SW. -MANUAL RESET, SPST-(N.C.)
FSE	FLAME-PROVING SENSOR ELECTRODE
FU1	FUSE, 3 AMP, AUTOMOTIVE BLADE TYPE, FACTORY INSTALLED
FU2	FUSE OR CIRCUIT-BREAKER CURRENT-INTERRUPT DEVICE (FIELD INSTALLED & SUPPLIED)
GV	GAS VALVE-REDUNDANT OPERATORS
GVR	GAS VALVE RELAY, DPST-(N.O.)
HI/LO	BLOWER MOTOR SPEED CHANGE RELAY, SPDT
HSI	HOT SURFACE IGNITER (115 VAC)
HSIR	HOT SURFACE IGNITER RELAY, SPST-(N.O.)
HUM	24VAC HUMIDIFIER CONNECTION (0.5 AMP. MAX.)
IDM	INDUCED DRAFT MOTOR, SHADED-POLE
IDR	INDUCER MOTOR RELAY, SPST-(N.O.)
ILK	BLOWER DOOR INTERLOCK SWITCH, SPST-(N.O.)
ILK-1	SLAVE AUX. BLOWER DOOR INTERLOCK SWITCH, SPST-(N.O.)
JB	JUNCTION BOX
LED	LIGHT-EMITTING DIODE FOR STATUS CODES
LGPS	LOW GAS-PRESSURE SWITCH, SPST (N.O.)
LS	LIMIT SWITCH, AUTO RESET, SPST(N.C.)
OL	AUTO-RESET INTERNAL MOTOR OVERLOAD TEMP. SWITCH, SPST-(N.C.)
PCB	PRINTED CIRCUIT BOARD
PL1	9-CIRCUIT CONNECTOR
PL2	2-CIRCUIT CONNECTOR
PL3	3-CIRCUIT IDM CONNECTOR
PL5	2-CIRCUIT HSI CONNECTOR
PL6	2-CIRCUIT TWINNING KIT CONNECTOR
PL7	1-CIRCUIT TWINNING KIT IN-LINE SPLICE
PRS	PRESSURE SWITCH, SPST-(N.O.)
TEST / TWIN	COMPONENT TEST & TWIN TERMINAL
TKR	TWINNING KIT RELAY, SPST-(N.O.)
TRAN	TRANSFORMER-115VAC / 24VAC

JUNCTION
UNMARKED TERMINAL
PCB CONTROL TERMINAL
FACTORY WIRING (115VAC)
FACTORY WIRING (24VAC)
FIELD WIRING (115VAC)
FIELD ACCESSORY WIRING (24VAC)
FIELD WIRING TERMINAL, NOTE #14
FIELD GROUND
EQUIPMENT GROUND
FIELD SPLICE
PLUG RECEPTACLE
WIRES PASSING THROUGH HOLES IN CASINGS FROM LH TO RH FURNACE.

322866-101 REV. B

NOTES:

1. If any of the original equipment wire is replaced, use wire rated for 105°C of the same type.
2. Inducer (IDM) and blower (BLWM) motors contain internal auto-reset thermal overload switches (OL).
3. Blower motor speed selections are for average conditions, see installation instructions for details on optimum speed selection.
4. Use only copper wire between the disconnect switch and the furnace.
5. This wire must be connected to furnace sheetmetal for control to prove flame.
6. Replace only with a 3 AMP fuse.
7. Yellow lead (MED-HI) is not on all motors.
8. Passes through holes in casings. ALS-S & ILK-1 are located in the slave furnace blower compartment.
9. Make thermostat connections to only the LH furnace.
10. Make no thermostat connections to RH furnace.
11. Blower-on delay, gas heating 40 seconds, cooling or heat pump 2 seconds.
12. Blower-off delay, gas heating 90, 135, 180 or 225 seconds (135 seconds only on some models), cooling or heat pump 90 seconds.
13. Ignition-lockout will occur after four consecutive unsuccessful trials-for-ignition. Control will auto-reset after three hours.
14. Some models may have spade quick connect terminals.
15. Factory Connected when LGPS not used.

A95333

Fig. 10—Connection Diagram for Twinned Single-Speed Non-Condensing Furnaces

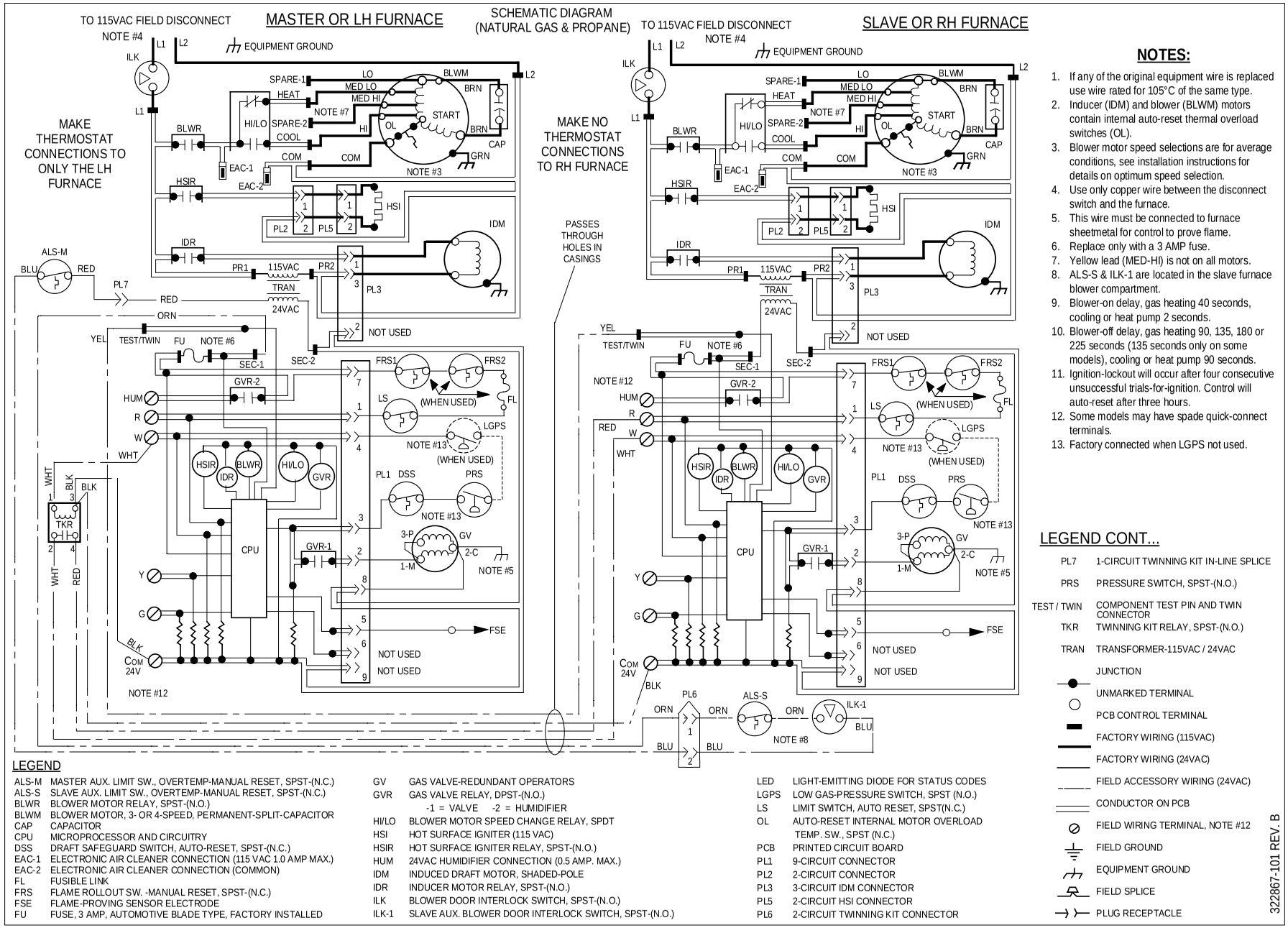

A95334

Fig. 11—Schematic Diagram for Twinned Single-Speed Non-Condensing Furnaces

SECTION II: MODELS 58TUA, 58UXT, 330AAV, AND 330JAV UPFLOW 2-SPEED NON-CONDENSING HSI FURNACES

PROCEDURE 1—INSTALL FURNACES

NOTE: Multipoise units must be installed in UPFLOW configuration.

Refer to Fig. 1 and 12 for appearance and dimensional drawing of twinned furnaces and their connection locations.

1. Select 2 identical heating and airflow furnaces. (See Table 3.)
2. Remove bottom closure panels from both furnaces. (See Fig. 3.)
   a. Remove 2 screws from bottom front panel.
   b. Rotate front panel downward to remove.
   c. Remove bottom closure panel and discard.
   d. Reinstall bottom front panel by reversing item 2.a. and b.
3. If return air is to enter 1 side of each furnace, cut open 1 entire return-air opening in appropriate side of each furnace. (See Fig. 12.)
4. Apply 2 factory-supplied foam strips to mating side of each furnace. Locate strips equal distance from top and bottom as shown in Fig. 4.
5. Remove gas and power hole closures from RH furnace only as indicated in Fig. 12.
6. Remove 7/8-in. diameter accessory hole closures from mating sides of furnaces. (See Fig. 4.)
7. Position furnaces against each other on return-air plenum. Adjust and shim each furnace to align 7/8-in. diameter holes in both furnaces.
8. Drill two 1/8-in. holes, approximately 1 in. below discharge flange, from inside top of discharge opening and through both furnaces. (See Fig. 5.)
9. Drive 1 factory-supplied No. 6 X 3/4-in. LG screw through each hole and tighten until furnaces are secure and foam strips have sealed gap between furnaces.
10. Insert 1 snap bushing through each adjoining accessory hole of each furnace.
11. Remove 7/8-in. diameter knockout from blower shelf of LH furnace near front right corner.
12. Insert 1 strain relief bushing through blower shelf hole.
13. Connect return- and supply-air ducts to furnaces. Seal duct connections to prevent air leakage.

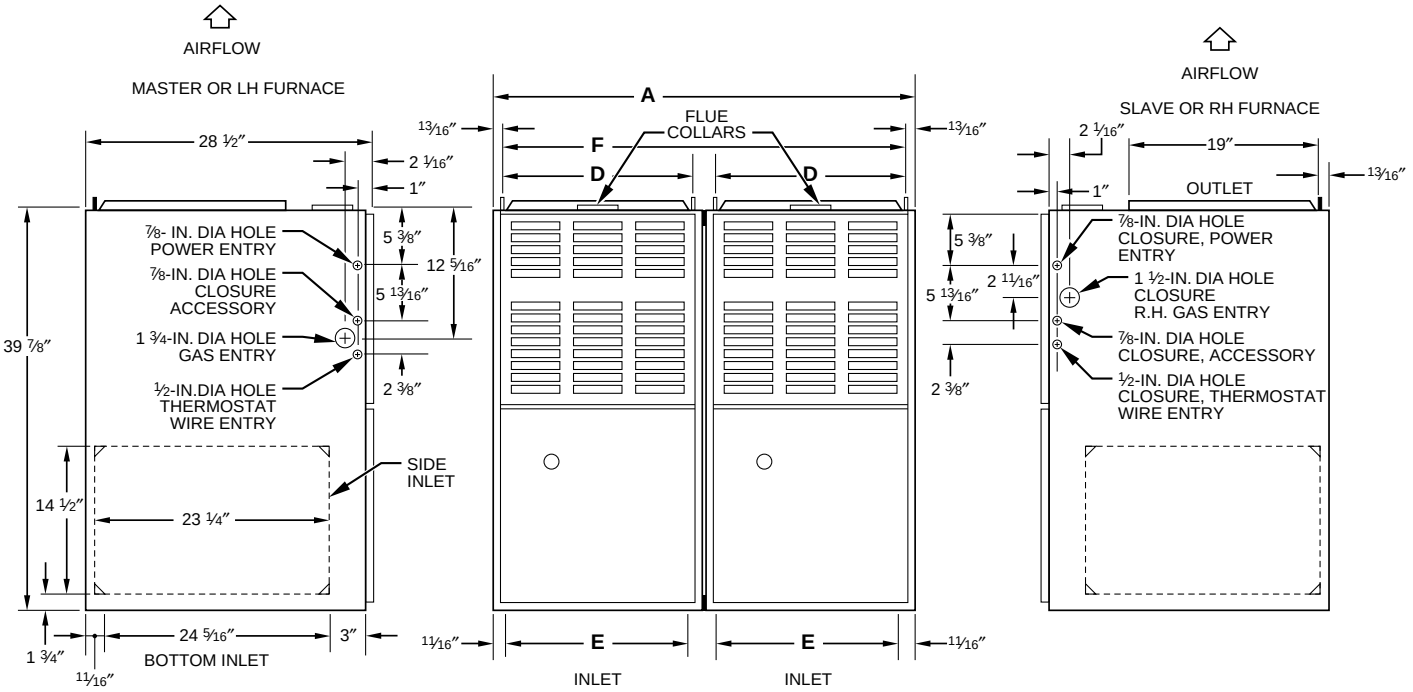

A93532

Fig. 11—Dimensional Drawing For Twinned 2-Speed Non-Condensing Furnaces

Table 3—58TUA, 58UXT, 330AAV, and 330JAV 2-Speed Non-Condensing Furnace Dimensions (In.)

INPUT HEATING SIZE (BTUH)	NOMINAL COOLING SIZE (BTUH)	A	D	E	F
80,000	48,000	42-5/16	19-3/8	19-1/2	40-11/16
100,000	48,000	42-5/16	19-3/8	19-1/2	40-11/16
100,000	60,000	49-5/16	22-7/8	23	47-11/16
120,000	48,000	42-5/16	19-3/8	19-1/2	40-11/16
120,000	60,000	49-5/16	22-7/8	23	47-11/16
133,000	60,000	49-5/16	22-7/8	23	47-11/16

14. Move 115-v junction box JB in LH furnace from right-hand side to left-hand side. For models produced before January 1995, blower door switch ILK in LH furnace must also be moved from right-hand side to left-hand side.

⚠ WARNING: DO NOT use the back of the furnace for return-air duct connections as limit cycling will occur. A failure to follow this warning can cause a fire, personal injury, or death.

PROCEDURE 2—CONNECT ELECTRICAL COMPONENTS—HEATING

⚠ WARNING: Make no connections between the R 24-vac connector in 1 furnace and the R 24-vac connector in other furnace. Failure to follow this warning can cause a fire, personal injury, or death.

See electrostatic discharge precaution on page 2.

1. Remove control and blower access doors from both furnaces.
2. Determine desired furnace control operation and see appropriate section for use and application of twinning kit relay and harness assembly (TKR).

Two-Stage Heat with Single-Stage Gas-Heat Thermostat (Field Supplied)

NOTE: This application allows both furnaces to operate in either high- or low-gas-heat as determined by adaptive mode of both furnace controls. See furnace Installation, Start-Up, and Operating Instructions for further details on this heating mode.

a. Remove black and yellow wires from wire-tied TKR harness assembly for later use.
b. Discard relay, red wire, and both white wires from TKR harness assembly.
c. Use field-supplied electrical tape to insulate black wire's 1/4-in. quick-connect terminal labeled 3.
d. Connect black wire terminal labeled C to LH furnace control thermostat connection COM 24.
e. Connect yellow wire terminal labeled TEST to LH furnace control TWIN/TEST terminal.
f. Route black and yellow wire loose ends through snap bushings previously installed between furnaces. (See Fig. 4.)
g. Connect black wire terminal labeled C-SLAVE to RH furnace control thermostat connection COM 24.
h. Connect yellow wire terminal labeled TEST SLAVE to RH furnace control TWIN/TEST terminal.
i. Proceed to item 3 to complete electrical connections.

Two-Stage Heat with 2-Stage Gas-Heat Thermostat (Field Supplied)

NOTE: This attachment allows both furnaces to operate in either high- or low-gas heat as determined by thermostat's 2-stage operation. See furnace Installation, Start-Up, and Operating Instructions for further details on this heating mode.

a. Secure relay of TKR assembly to LH furnace control mounting bracket using 2 factory-supplied No. 6 X 3/4-in. LG screws. See Fig. 6 for location of holes to be drilled.
→ b. Connect TKR white wire labeled W from TKR to LH furnace control thermostat connection W/W1.
c. Connect TKR black wire labeled C from TKR to LH furnace control thermostat connection COM 24.
d. Connect TKR yellow wire labeled TEST (loose wire end near TKR) to LH furnace control TWIN/TEST terminal.
e. Route remaining 4 loose TKR wires through:
   (1.) Strain relief bushing previously installed in 7/8-in. hole in right side of blower shelf.
   (2.) Gas control compartment of LH furnace.
   (3.) Snap bushings previously installed between furnaces. (See Fig. 4.)
f. Connect TKR red wire labeled R-SLAVE from TKR to RH furnace control thermostat connection R.
g. Connect TKR white wire labeled W-SLAVE from TKR to RH furnace control thermostat connection W/W1.
h. Connect TKR black wire labeled C-SLAVE from TKR to RH furnace control thermostat connection COM 24V.
i. Connect TKR yellow wire labeled TEST SLAVE from LH furnace control TWIN/TEST terminal to RH furnace control TWIN/TEST terminal.
j. Proceed to item 3 to complete electrical connections.

3. Install LH furnace auxiliary limit switch harness ALS-M.

NOTE: LH furnace ALS-M assembly DOES NOT include door switch.

a. Drill 1/8-in. hole in blower housing 10 in. below blower shelf. (See Fig. 1.)
b. Position ALS-M so reset button faces front of furnace.
c. Secure bracket to blower housing using factory-supplied No. 6 X 3/4-in. LG screw.
d. Disconnect red transformer wire from LH furnace control SEC-1 connection.
e. Cut off the 3/16-in. quick-connect terminal from red transformer wire.
f. Strip red wire 1/8 in. and secure factory-supplied 1/4-in. quick-connect terminal.
g. Connect red transformer wire connector to ALS-M wire connector labeled TRANS ASSY.
h. Connect ALS-M wire connector labeled DOOR SWITCH or SEC 1 to LH furnace control SEC-1 terminal.

i. Route 2-wire ALS-M connector PL8 through:

(1.) Strain relief bushing previously installed in 7/8-in. hole in right side of blower shelf.

(2.) Gas control compartment of LH furnace.

(3.) Snap bushings previously installed between furnaces into gas control compartment of RH furnace.

4. Install RH furnace auxiliary door switch and auxiliary limit switch harness ALS-S/ILK-1.

NOTE: RH furnace (SLAVE) auxiliary limit switch harness assembly ALS-S/ILK-1 has door switch included.

a. Drill 1/8-in. hole in blower housing 10 in. below blower shelf. (See Fig. 1.)

b. Position ALS-S so terminals face front of furnace.

c. Secure bracket to blower housing using factory-supplied No. 6 X 3/4-in. LG screw.

d. Relocate RH furnace junction box JB from left side to right side as shown in Fig. 1 if JB is not at right-hand side of RH furnace. For models produced before January 1995, blower door switch ILK must also be moved when JB changes location.

e. Position auxiliary door switch ILK-1 on left side of RH furnace.

f. Secure auxiliary door switch ILK-1 using factory-supplied No. 6 X 3/4-in. LG screw.

g. Route 2-wire harness connector PL8 of ALS-S/ILK-1 assembly up through snap bushing in 7/8-in. hole in left side of blower shelf and into gas control compartment.

h. Connect RH ALS-S connector PL8 to LH ALS-M connector PL8 that was routed through furnace casings.

5. Select identical blower speed taps at blower motor connectors in both furnaces.

⚠ CAUTION: Failure to select identical blower speed taps in both furnaces can result in overheating of furnace components and possible loss of furnace operation and damage to the furnaces.

---

6. Dress wires to ensure they do not contact sharp or moving parts nor interfere with blower operation, removal of filters, or operation of switches.
7. Make all thermostat connections to LH furnace only.

PROCEDURE 3—CONNECT ELECTRICAL COMPONENTS—COOLING

⚠ WARNING: Make no connections between the R 24-vac connector in 1 furnace and the R 24-vac connector in other furnace. Failure to follow this warning can cause a fire, personal injury, or death.

When installing single- and 2-stage twinned outdoor units with twinned gas furnaces, it is necessary to use a field-supplied 24-vac pilot relay and a field-supplied 24/115-vac transformer as shown in Fig. 13 to prevent overloading furnace 24/115-vac transformer.

PROCEDURE 4—VENTING

Refer to the Installation, Start-Up, and Operating Instructions supplied with each furnace for venting information.

⚠ CAUTION: When common-venting twinned, Category I (negative pressure venting), non-condensing furnaces, excessive condensate may occur as a result of oversized vent systems. Dedicated vents and/or proper vent sizing per the furnace Installation, Start-Up, and Operating Instructions will reduce the potential for condensation.

PROCEDURE 5—GAS SUPPLY PIPING

NOTE: All gas connections must be made through exposed outer side of each furnace. Do not common connect any connection other than supply- and return-air ducts.

Furnaces are recommended to be provided with a single shutoff valve. However, individual shutoff valves may be required by local codes or jurisdictions. Refer to Installation, Start-Up, and Operating Instructions provided with each furnace for additional gas supply information.

PROCEDURE 6—ELECTRICAL SUPPLY CONNECTIONS

NOTE: All electrical power connections must be made through exposed outer side of each furnace. Do not common connect any connection other than supply- and return-air ducts.

1. Each furnace shall be connected to its own 115-vac power supply. The twinning kit installation interconnects the furnaces, allowing them to operate as a single furnace. The L1 (black) connection to each furnace must be connected to circuit breakers connected to the same service panel 115-vac phase leg.

   On single-phase (residential) systems, each furnace circuit breaker should be located directly across from each other in service panel, or each furnace circuit breaker should be located on the same side of service panel, but must skip 1 space to be connected to the same leg of the 1-phase power supply.

   On 3-phase (commercial) systems, each furnace circuit breaker should be located directly across from each other in service panel, or each furnace circuit breaker should be located on the same side of service panel, but must skip 2 spaces to be connected to the same leg of the 3-phase power supply.

   The proper 115-vac phasing of furnace connections permits 24-vac transformer phasing as described below.
2. Phasing of the connected 24-vac transformer secondary circuits can be determined with the LED status of both furnaces. See furnace Installation, Start-Up and Operating Instructions and status code labels on blower doors. The furnaces' transformers' black leads should be connected to PR1 connectors and white leads to PR2 connectors on controls. If 1 or both LEDs are rapidly flashing, disconnect lead at TEST/TWIN terminal of LH furnace and observe LED at each furnace.

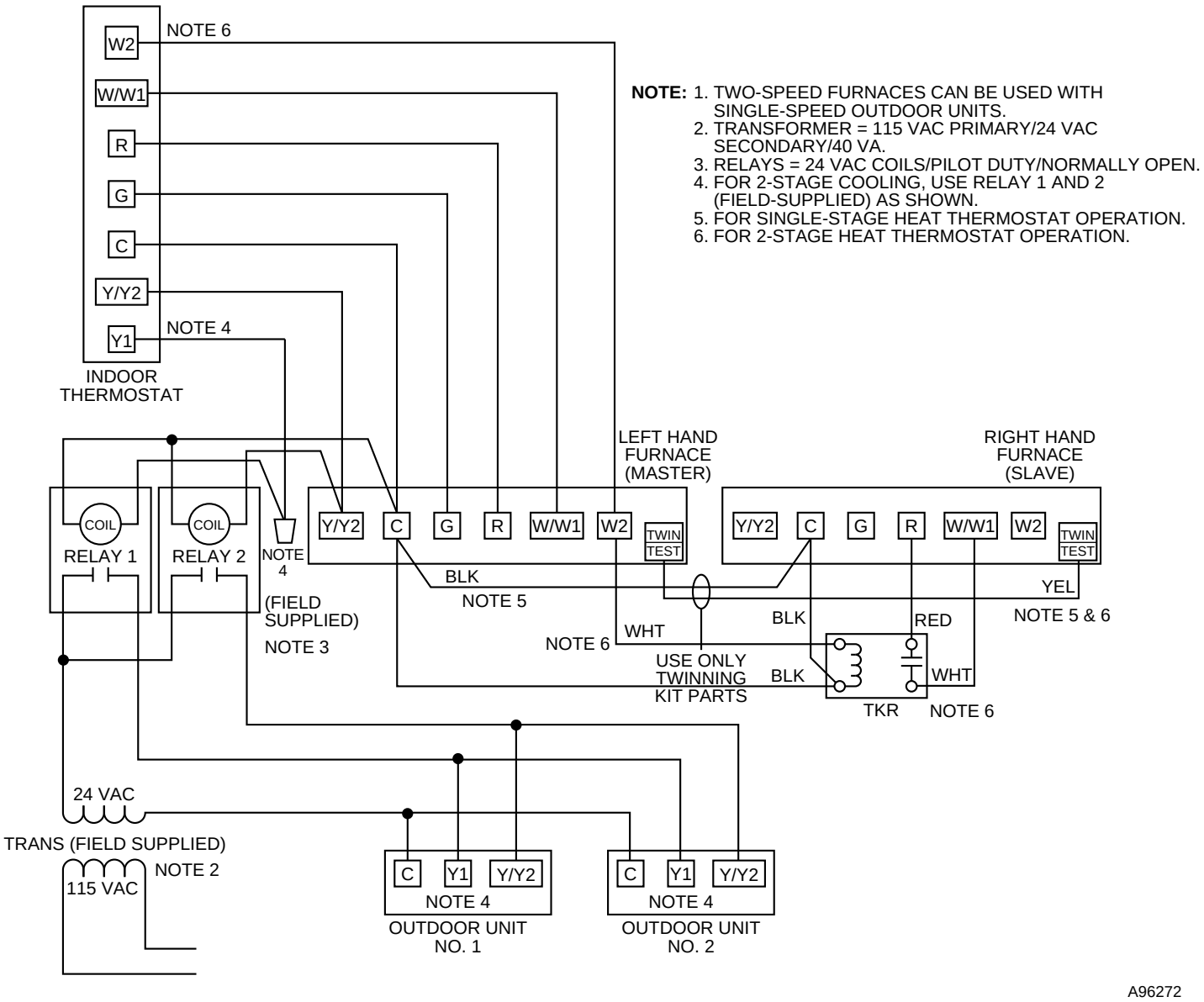

Fig. 13—Twinning 2 Outdoor Units with Two 2-Speed Furnaces with 1 Thermostat

IF:

a. Both LEDs are on continuously:

(1.) System phasing is okay.

(2.) Reverse SEC-1 and SEC-2 in LH furnace.

b. One or both LEDs are rapidly flashing:

(1.) Line voltage polarity is reversed.

(2.) Correct line voltage polarity on furnace(s) with rapidly flashing LED.

c. One LED is off, 1 LED is on continuously:

(1.) The 24-vac circuit is inoperative on furnace with LED light off.

(2.) Check transformers, auxiliary limits, and door switches in both furnaces and correct problem.

3. Reconnect lead at TWIN/TEST terminal of LH furnace and observe LED at each furnace. The LEDs will glow steady for proper phasing.

PROCEDURE 7—START-UP AND ADJUSTMENT

Refer to Installation, Start-Up, and Operating Instructions supplied with furnace for detailed information.

1. Shut off all power and gas to both furnaces.
2. Position TWINNING JUMPERS TJ on furnace controls. (See Fig. 14.)
   a. The LH furnace control TWINNING JUMPER TJ MUST remain in the MASTER position.
   b. The RH furnace control TWINNING JUMPER TJ MUST be moved to the SLAVE position.
3. Determine desired furnace control operation and position set-up switches on furnace control. (See Fig. 14.)

   Two-Stage Heat with Single-Stage Gas-Heat Thermostat

   a. Position SW1 switch on controls in BOTH furnaces to OFF.
   b. Position SW2 switch on controls in BOTH furnaces to OFF.
   c. Position SW3 and SW4 switches on control in BOTH furnaces to desired gas-heat blower off delay. (See furnace Installation, Start-Up, and Operating Instructions for further details.)

   Two-Stage Heat with 2-Stage Gas-Heat Thermostat

   a. Position SW1 switch on controls in BOTH furnaces to OFF.
   b. Position SW2 switch on controls in BOTH furnaces to ON.
   c. Position SW3 and SW4 switches on controls in BOTH furnaces to desired gas-heat blower off delay. (See furnace Installation, Start-Up, and Operating Instructions for further details.)
4. Attach twinning connection diagram label over existing wiring label on inside of LH furnace blower door.
5. Attach twinning schematic diagram label over existing wiring label on inside of RH furnace blower door.
6. Turn on power and gas to both furnaces.
7. Reinstall blower access doors on both furnaces.
8. Determine furnace model. Using appropriate section below, operate furnaces through 2 cycles in each mode to confirm correct operation by operating only the thermostat.
   a. Single- or 2-stage gas heating thermostat R-to-W/W1 for low-gas heat. Single-stage thermostat with adaptive heating mode causes furnace to operate in low-gas-heat mode for up to 16 minutes, and then furnace automatically switches to high-gas heat. First stage of a 2-stage thermostat without adaptive heating mode causes furnace to operate in low-gas-heat mode indefinitely.
   b. First- and second-stage of 2-stage heating thermostat R-to-W/W1-and-W2 for high-gas-heat.
   c. Thermostat R-to-G for continuous fan or 2-speed cooling low-cool blower.
   d. Cooling thermostat R-to-G-and-Y/Y2 for single-speed cooling blower or for 2-speed cooling high-cool blower.
9. Reinstall control doors on both furnaces.
10. Instruct user in operation of furnaces and thermostat.

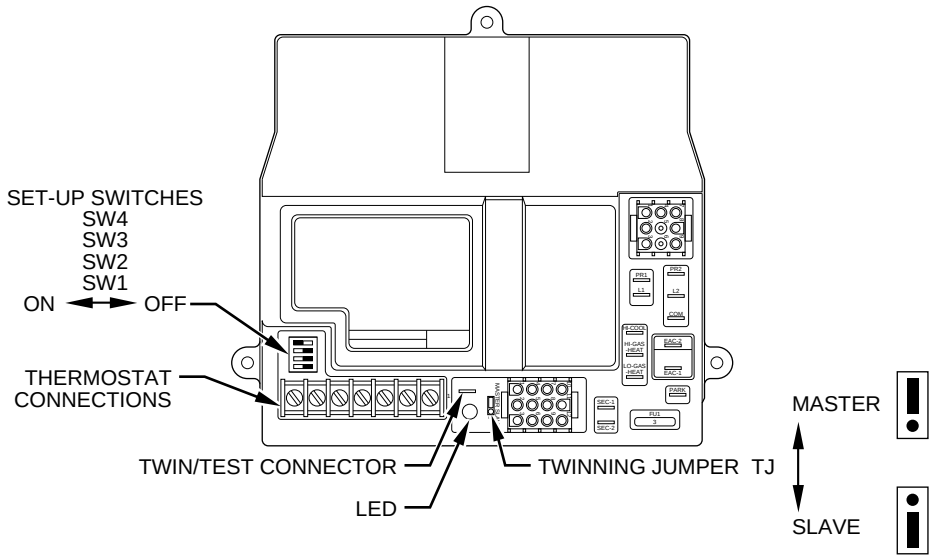

Fig. 14—Two-Stage Furnace Control

PROCEDURE 8—SEQUENCE OF OPERATION

See Fig. 15 and 16 for 2-speed non-condensing furnace twinning connection and schematic wiring diagrams while reviewing sequence of operation.

Twinning operation is controlled by LH or MASTER furnace. The TWIN/TEST and COM 24V connection wires ensure the 2 furnaces coordinate their blower operation. When either furnace requires blower operation, both furnaces operate their blowers at the same speed (the highest speed required by either furnace). Both furnaces operate simultaneously in the same mode: low-gas heat, high-gas heat, low-cool, high-cool, or continuous fan. Exceptions can occur if a safety device on either furnace is activated (such as low-gas-heat or high-gas-heat pressure switch, flame roll-out switch, limit switch, draft safeguard switch, twinning kit auxiliary limit switch, or flame-proving sensor). In such a case, the other furnace continues to operate unless the safety device is the flame roll-out, limit, or twinning kit auxiliary limit switch, in which case both furnaces respond.

Two-Stage Heat with Single-Stage Gas-Heat Thermostat

See Section II, Procedure 2 for furnace and kit components used.

NOTE: Set-up switches SW1 and SW2 in BOTH furnaces are in OFF position.

1. LH (MASTER) furnace control determines whether furnaces are both operating in low-gas heat or high-gas heat, depending on the control's adaptive gas heating mode when the R-to-W/W1 circuit is closed in LH furnace.
2. Operation in all modes is the same for twinned furnaces as for an individual furnace. See furnace Installation, Start-Up, and Operating Instructions for more information on sequence of operation.

Two-Stage Heat with 2-Stage Gas-Heat Thermostat

See Section II, Procedure 2 for furnace and kit components used.

NOTE: Set-up switches SW1 in BOTH furnaces are in OFF position, and set-up switches SW2 in BOTH furnaces are in ON position.

1. The 2-stage thermostat (NOT furnace control's adaptive gas heating mode) determines whether furnaces are both operating in low-gas heat or high-gas heat, depending on whether 1 or both thermostat stages (W/W1 or W/W1-and-W2) are calling for heat.
2. Operation in all modes is the same for twinned furnaces as for an individual furnace. See furnace Installation, Start-Up, and Operating Instructions for more information on sequence of operation.

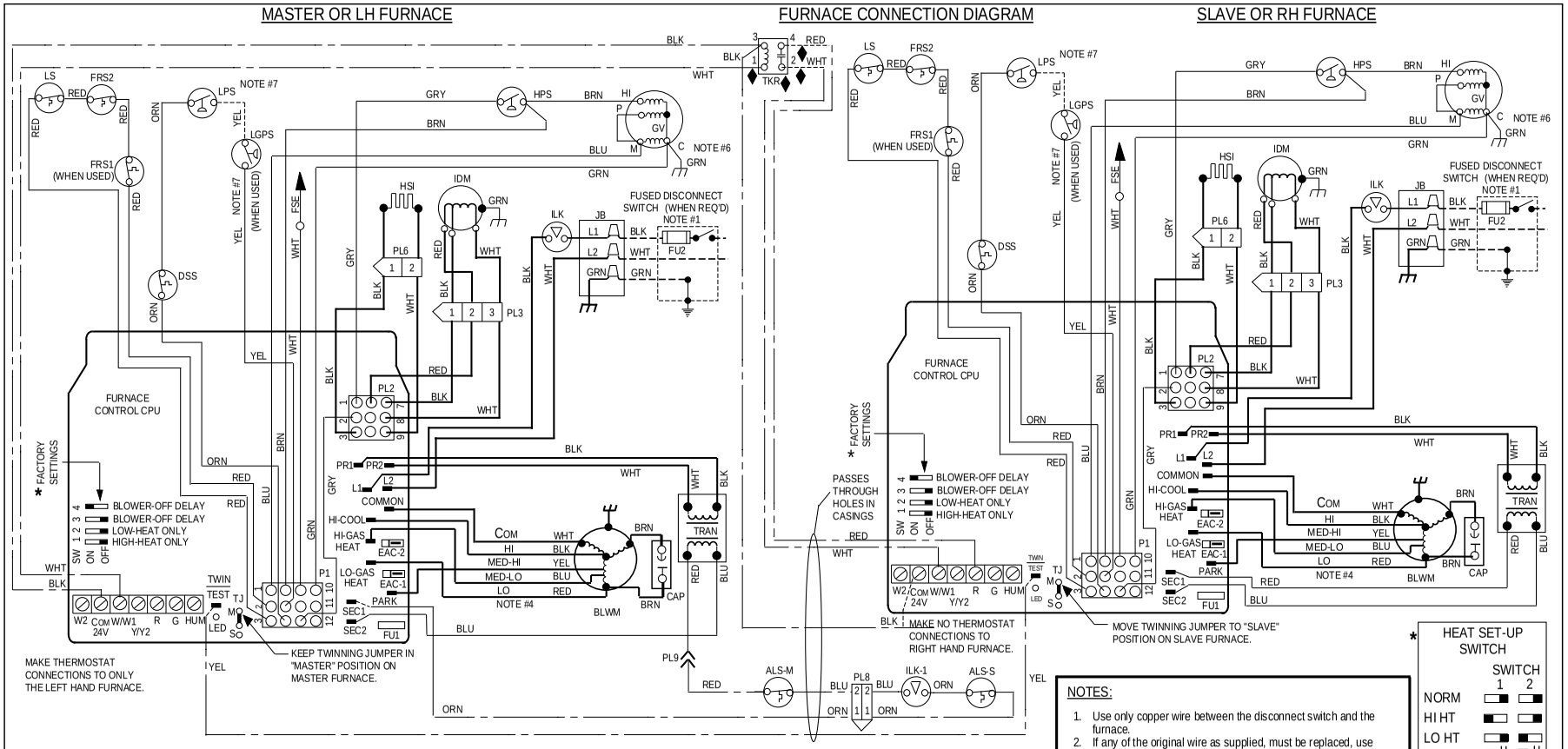

A94167

Fig. 15—Connection Diagram for Twinned 2-Speed Non-Condensing Furnaces

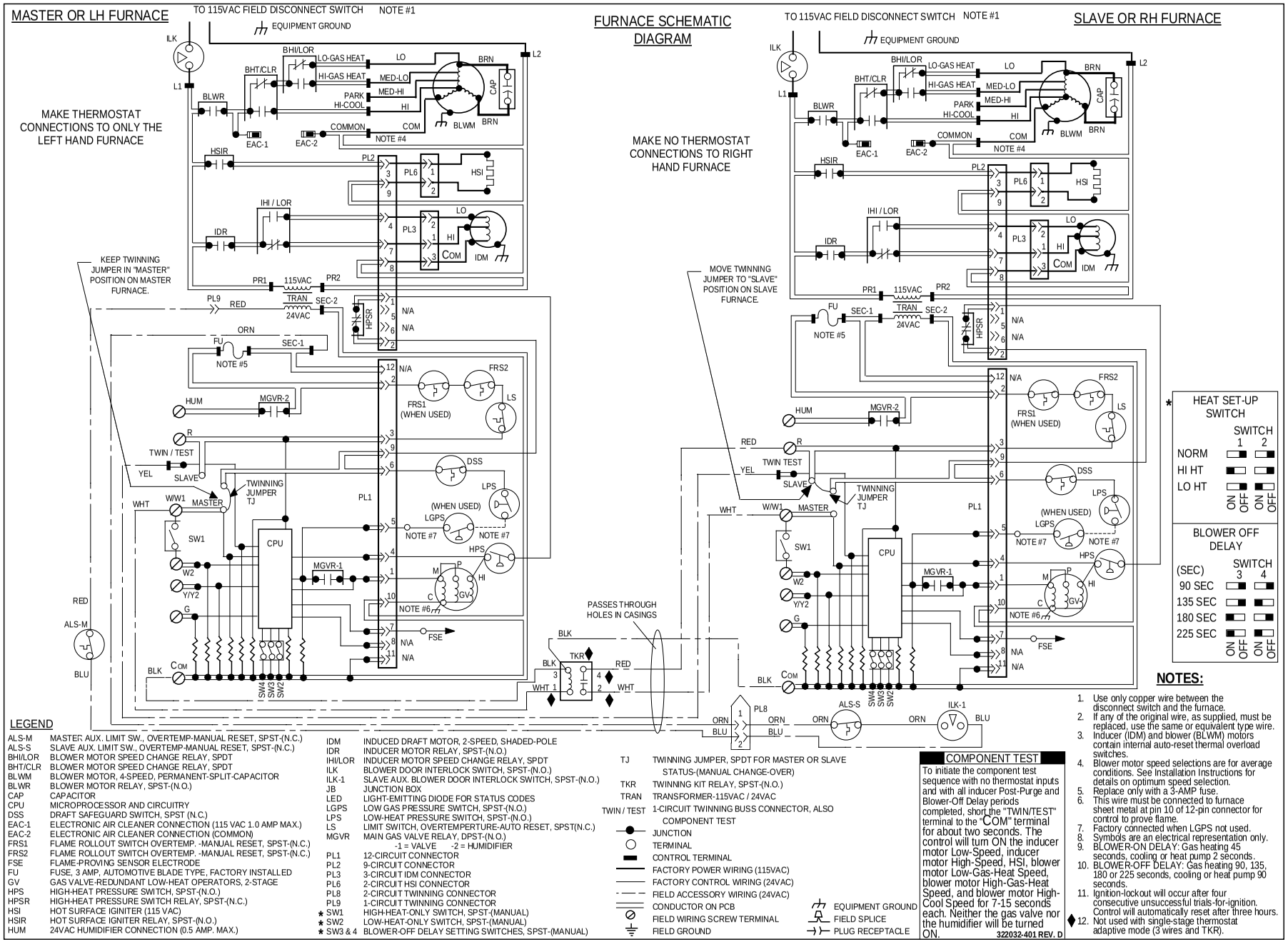

LEGEND

ALS-M	MASTER AUX. LIMIT SW., OVERTEMP-MANUAL RESET, SPST-(N.C.)
ALS-S	SLAVE AUX. LIMIT SW., OVERTEMP-MANUAL RESET, SPST-(N.C.)
BHI/LOR	BLOWER MOTOR SPEED CHANGE RELAY, SPDT
BHT/CLR	BLOWER MOTOR SPEED CHANGE RELAY, SPDT
BLWM	BLOWER MOTOR, 4-SPEED, PERMANENT-SPLIT-CAPACITOR
BLWR	BLOWER MOTOR RELAY, SPST-(N.O.)
CAP	CAPACITOR
CPU	MICROPROCESSOR AND CIRCUITRY
DSS	DRAFT SAFEGUARD SWITCH, SPST (N.C.)
EAC-1	ELECTRONIC AIR CLEANER CONNECTION (115 VAC 1.0 AMP MAX.)
EAC-2	ELECTRONIC AIR CLEANER CONNECTION (COMMON)
FRS1	FLAME ROLLOUT SWITCH OVERTEMP. -MANUAL RESET, SPST-(N.C.)
FRS2	FLAME ROLLOUT SWITCH OVERTEMP. -MANUAL RESET, SPST-(N.C.)
FSE	FLAME-PROVING SENSOR ELECTRODE
FU	FUSE, 3 AMP, AUTOMOTIVE BLADE TYPE, FACTORY INSTALLED
GV	GAS VALVE-REDUNDANT LOW-HEAT OPERATORS, 2-STAGE
HPS	HIGH-HEAT PRESSURE SWITCH, SPST-(N.O.)
HPSR	HIGH-HEAT PRESSURE SWITCH RELAY, SPST-(N.C.)
HSI	HOT SURFACE IGNITER (115 VAC)
HSIR	HOT SURFACE IGNITER RELAY, SPST-(N.O.)
HUM	24VAC HUMIDIFIER CONNECTION (0.5 AMP. MAX.)
IDM	INDUCED DRAFT MOTOR, 2-SPEED, SHADED-POLE
IDR	INDUCER MOTOR RELAY, SPST-(N.O.)
IHI/LOR	INDUCER MOTOR SPEED CHANGE RELAY, SPDT
ILK	BLOWER DOOR INTERLOCK SWITCH, SPST-(N.O.)
ILK-1	SLAVE AUX. BLOWER DOOR INTERLOCK SWITCH, SPST-(N.O.)
JB	JUNCTION BOX
LED	LIGHT-EMITTING DIODE FOR STATUS CODES
LGPS	LOW GAS PRESSURE SWITCH, SPST-(N.O.)
LPS	LOW-HEAT PRESSURE SWITCH, SPST-(N.O.)
LS	LIMIT SWITCH, OVERTEMPERTURE-AUTO RESET, SPST(N.C.)
MGVR	MAIN GAS VALVE RELAY, DPST-(N.O.) -1 = VALVE -2 = HUMIDIFIER
PL1	12-CIRCUIT CONNECTOR
PL2	9-CIRCUIT CONNECTOR
PL3	3-CIRCUIT IDM CONNECTOR
PL6	2-CIRCUIT HSI CONNECTOR
PL8	2-CIRCUIT TWINNING CONNECTOR
PL9	1-CIRCUIT TWINNING CONNECTOR
* SW1	HIGH-HEAT-ONLY SWITCH, SPST-(MANUAL)
* SW2	LOW-HEAT-ONLY SWITCH, SPST-(MANUAL)
* SW3 & 4	BLOWER-OFF DELAY SETTING SWITCHES, SPST-(MANUAL)
TJ	TWINNING JUMPER, SPDT FOR MASTER OR SLAVE STATUS-(MANUAL CHANGE-OVER)
TKR	TWINNING KIT RELAY, SPST-(N.O.)
TRAN	TRANSFORMER-115VAC / 24VAC
TWIN / TEST	1-CIRCUIT TWINNING BUSS CONNECTOR, ALSO COMPONENT TEST

JUNCTION
TERMINAL
CONTROL TERMINAL
FACTORY POWER WIRING (115VAC)
FACTORY CONTROL WIRING (24VAC)
FIELD ACCESSORY WIRING (24VAC)
CONDUCTOR ON PCB
FIELD WIRING SCREW TERMINAL
FIELD GROUND
EQUIPMENT GROUND
FIELD SPLICE
PLUG RECEPTACLE

COMPONENT TEST

To initiate the component test sequence with no thermostat inputs and with all inducer Post-Purge and Blower-Off Delay periods completed, short the "TWIN/TEST" terminal to the "COM" terminal for about two seconds. The control will turn ON the inducer motor Low-Speed, inducer motor High-Speed, HSI, blower motor Low-Gas-Heat Speed, blower motor High-Gas-Heat Speed, and blower motor High-Cool Speed for 7-15 seconds each. Neither the gas valve nor the humidifier will be turned ON.

322032-401 REV. D

NOTES:

1. Use only copper wire between the disconnect switch and the furnace.
2. If any of the original wire, as supplied, must be replaced, use the same or equivalent type wire.
3. Inducer (IDM) and blower (BLWM) motors contain internal auto-reset thermal overload switches.
4. Blower motor speed selections are for average conditions. See Installation Instructions for details on optimum speed selection.
5. Replace only with a 3-AMP fuse.
6. This wire must be connected to furnace sheet metal at pin 10 of 12-pin connector for control to prove flame.
7. Factory connected when LGPS not used.
8. Symbols are an electrical representation only.
9. BLOWER-ON DELAY: Gas heating 45 seconds, cooling or heat pump 2 seconds.
10. BLOWER-OFF DELAY: Gas heating 90, 135, 180 or 225 seconds, cooling or heat pump 90 seconds.
11. Ignition-lockout will occur after four consecutive unsuccessful trials-for-ignition. Control will automatically reset after three hours.
12. ♦ Not used with single-stage thermostat adaptive mode (3 wires and TKR).

A94168

Fig. 16—Schematic Diagram for Twinned 2-Speed Non-Condensing Furnaces

→ SECTION III: MODELS 58MCA, 58MSA, 58MXA, 340MAV, 345MAV, 350MAV, 490AAV, AND PG9MAA UPFLOW SINGLE-SPEED CONDENSING HSI FURNACES

PROCEDURE 1—INSTALL FURNACES

NOTE: Multipoise units must be installed in UPFLOW configuration.

Refer to Fig. 17 and 18 for appearance and dimensional drawing of twinned furnaces and their connection locations.

1. Select 2 identical heating and airflow furnaces. (See Table 4.)
2. Remove bottom closure panels from both furnaces. (See Fig. 3.)
   a. Remove 2 screws from front filler panel.
   b. Rotate front filler panel downward to remove.
   c. Remove bottom closure panel and discard.
   d. Reinstall front filler panel by reversing item 2a and b.
3. Apply 2 factory-supplied foam strips to mating side of each furnace. Locate strips equal distance from top and bottom as shown in Fig. 19.
4. → Position furnaces against each other on return-air plenum. On furnaces AFTER Serial No. 2894A00001, adjust and shim each furnace to align unused condensate drain line holes in lower section of both furnaces holes which will be used for wire routing between furnaces. (See Fig. 19.)
5. Drill two 1/8-in. holes, approximately 1 in. below discharge air flange, from inside top of discharge opening and through both furnaces. (See Fig. 20.)
6. Drive 1 factory-supplied No. 6 X 3/4-in. LG screw through each hole and tighten until furnaces are secure and foam strips have sealed gap between furnaces.
7. → On furnaces AFTER Serial No. 2894A00001, insert 1 snap bushing through each adjoining unused condensate drain line hole of each furnace. (See Fig. 17 and 18.).
8. Connect return- and supply-air ducts to furnaces. Seal duct connections to prevent air leakage.

⚠ WARNING: DO NOT use the back of the furnace for return-air duct connections as limit cycling will occur. A failure to follow this warning can cause a fire, personal injury, or death.

PROCEDURE 2—CONNECT ELECTRICAL COMPONENTS—HEATING

⚠ WARNING: Make no connections between the R 24-vac connector in 1 furnace and the R 24-vac connector in other furnace. Failure to follow this warning can cause a fire, personal injury, or death.

See electrostatic discharge precaution on page 2.

1. Remove blower access panels from both furnaces.
2. → Install twinning kit relay (TKR) and harness (furnaces AFTER Serial No. 2894A00001).

   The twinning kit can be used for single-stage or 2-stage heating operation.

   Single-Stage Heat with Single-Stage Gas-Heat Thermostat (Field Supplied)

NOTE: This application of TKR allows both furnaces to operate in heating mode simultaneously. See furnace Installation, Start-Up, and Operating Instructions for further details on this heating mode.

e. Mount TKR assembly to underside of LH furnace control center enclosure using 1 No. 6 sheet metal screw (field supplied). Screw hole is located to left of door switch near front edge of control. (See Fig. 21.)

NOTE: See Fig. 7.

f. Route 3 loose wires (black, yellow, and white) from TKR assembly wire harness through thermostat cable hole adjacent to door switch. (See Fig. 21.)

NOTE: Cut wire tie near TKR to provide appropriate length of wires for connection.

g. Connect TKR white wire labeled W from TKR to LH furnace control center thermostat connection W.
h. Connect TKR black wire labeled C from TKR to LH furnace control center thermostat connection COM 24V.
i. Connect TKR yellow wire labeled TEST to LH furnace control center TEST/TWIN terminal.
j. Refer to Fig. 17, 18, and 21 and route remaining 4 loose TKR wires through the following:
   (1.) Snap bushing previously installed between furnaces in unused condensate drain holes.
   (2.) RH furnace thermostat cable hole bushing in control center box.
k. Connect TKR red wire labeled R-SLAVE from TKR to RH furnace control center thermostat connection R.
l. Connect TKR white wire labeled W-SLAVE from TKR to RH furnace control center thermostat connection W.
m. Connect TKR black wire labeled C-SLAVE from TKR to RH furnace control center thermostat connection COM 24V.
n. Connect TKR yellow wire labeled TEST SLAVE from LH furnace control center TEST/TWIN terminal to RH furnace control center TEST/TWIN terminal.

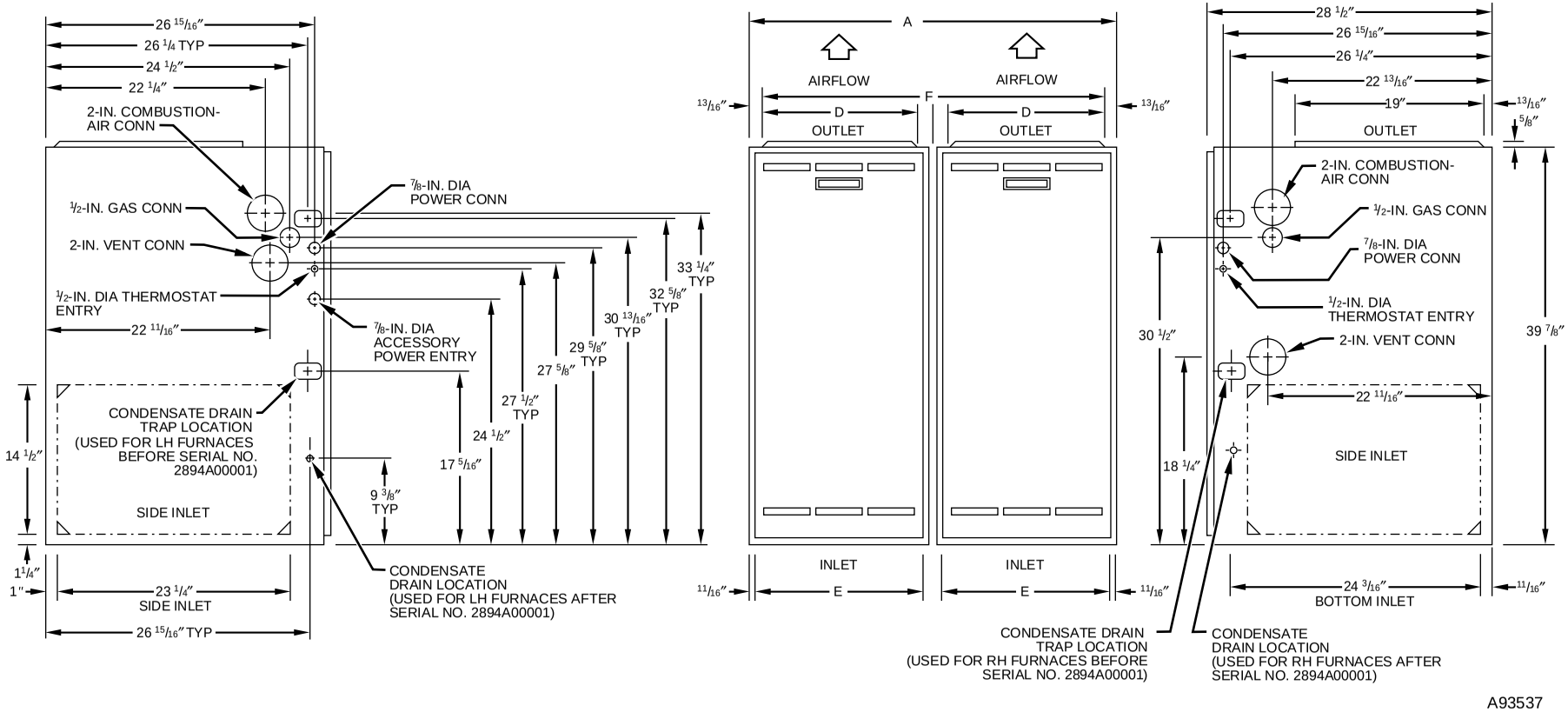

Fig. 17—Dimensional Drawing For Twinned Single-Speed Condensing Furnaces

→ Table 4—58MCA, 58MSA, 58MXA, 340MAV, 345MAV, 350MAV, 490AAV, and PG9MAA Single-Speed Condensing Furnace Dimensions (In.)

INPUT HEATING SIZE (BTUH)	NOMINAL COOLING SIZE	A	D	E	F
60,000	48,000	35	15-7/8	16	33-3/8
80,000	48,000	35	15-7/8	16	33-3/8
80,000	60,000	42	19-3/8	19-1/2	40-3/8
100,000	48,000	42	19-3/8	19-1/2	40-3/8
100,000	60,000	42	19-3/8	19-1/2	40-3/8
120,000	60,000	49	22-7/8	23	47-3/8

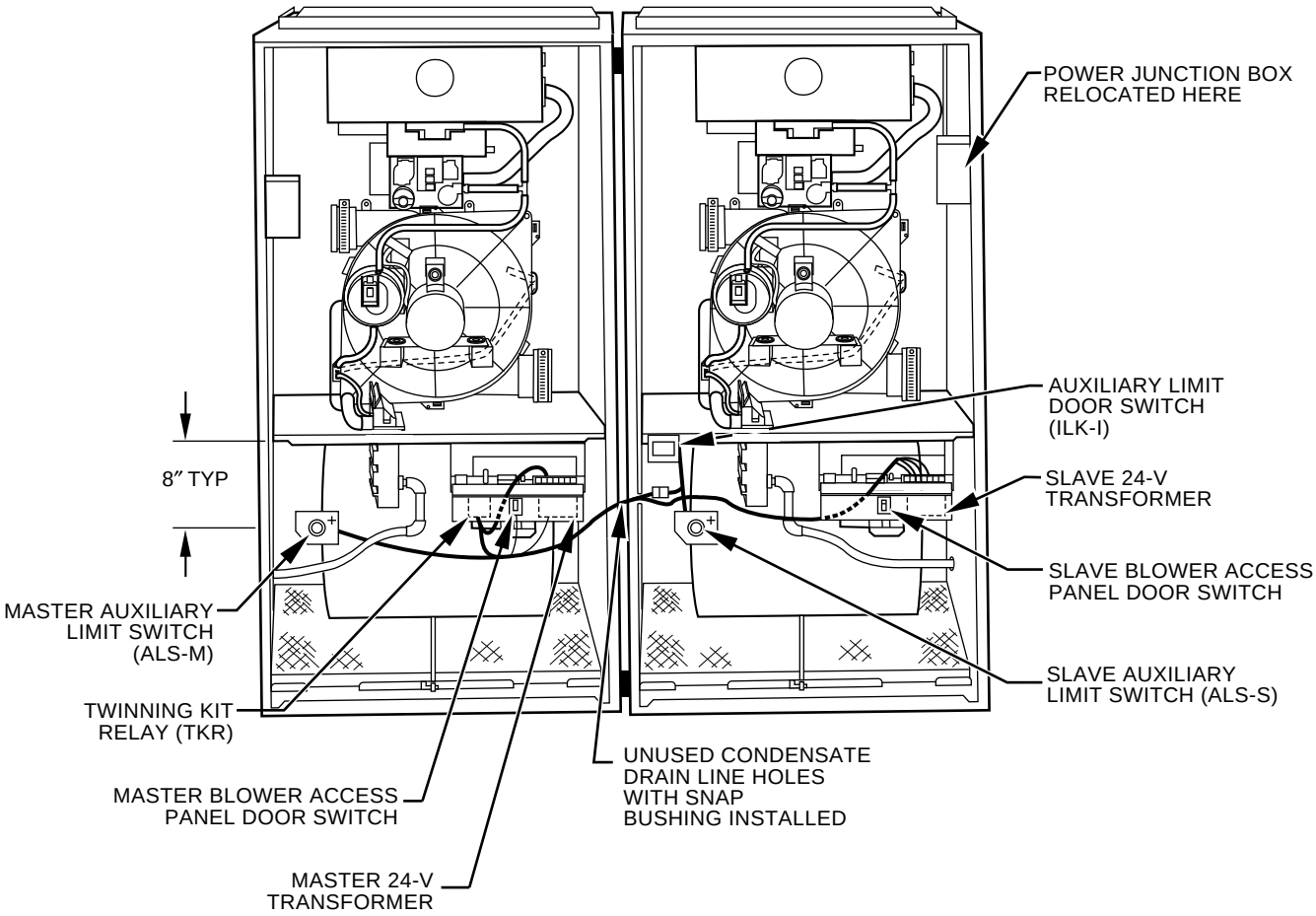

Fig. 18—Twinning Kit Installed on Single-Speed Condensing Furnaces (AFTER Serial No. 2894A00001)

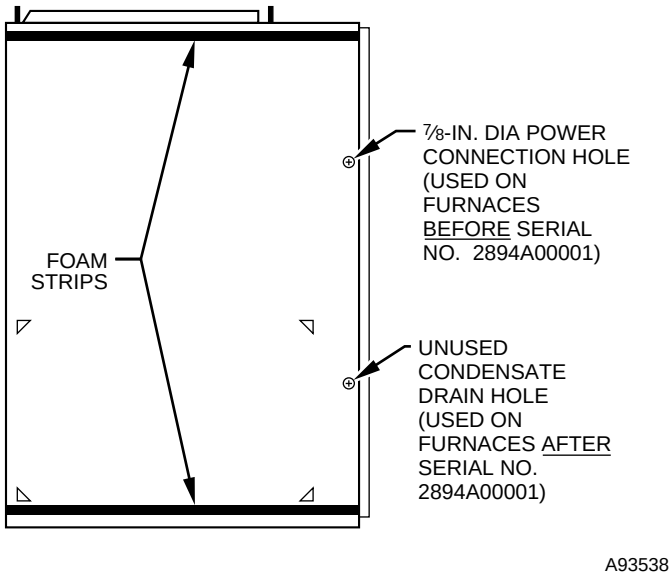

Fig. 19—Location of Foam Strips and Hole to be Used for Twinning Kit Wire Routing

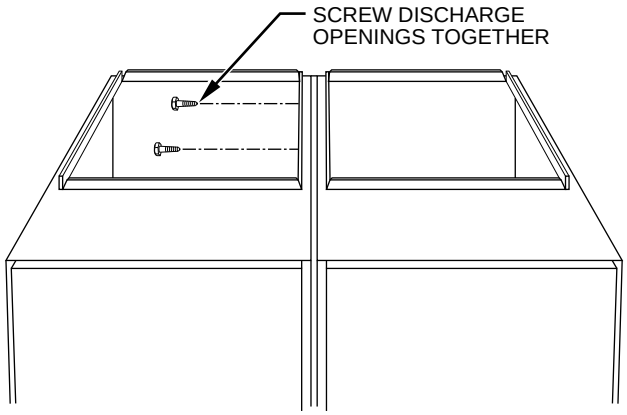

Fig. 20—Attaching Furnaces Together

NOTE: ALL field thermostat connections are to be made to LH furnace control center ONLY.

Two-Stage Heat with 2-Stage Gas-Heat Thermostat (Field Supplied)

NOTE: This modification allows LH furnace only to operate in heating mode for first-stage heat or both furnaces to operate in heating mode for second-stage heat as determined by a 2-stage thermostat. See furnace Installation, Start-Up, and Operating Instructions for further details on this heating mode.

To operate furnaces in 2-stage heating mode when a 2-stage thermostat controls the staging, install TKR as described above, then modify TKR wiring as follows:

⚠ **CAUTION: Supply-air temperature will be uneven left-to-right when only master system is operating.**

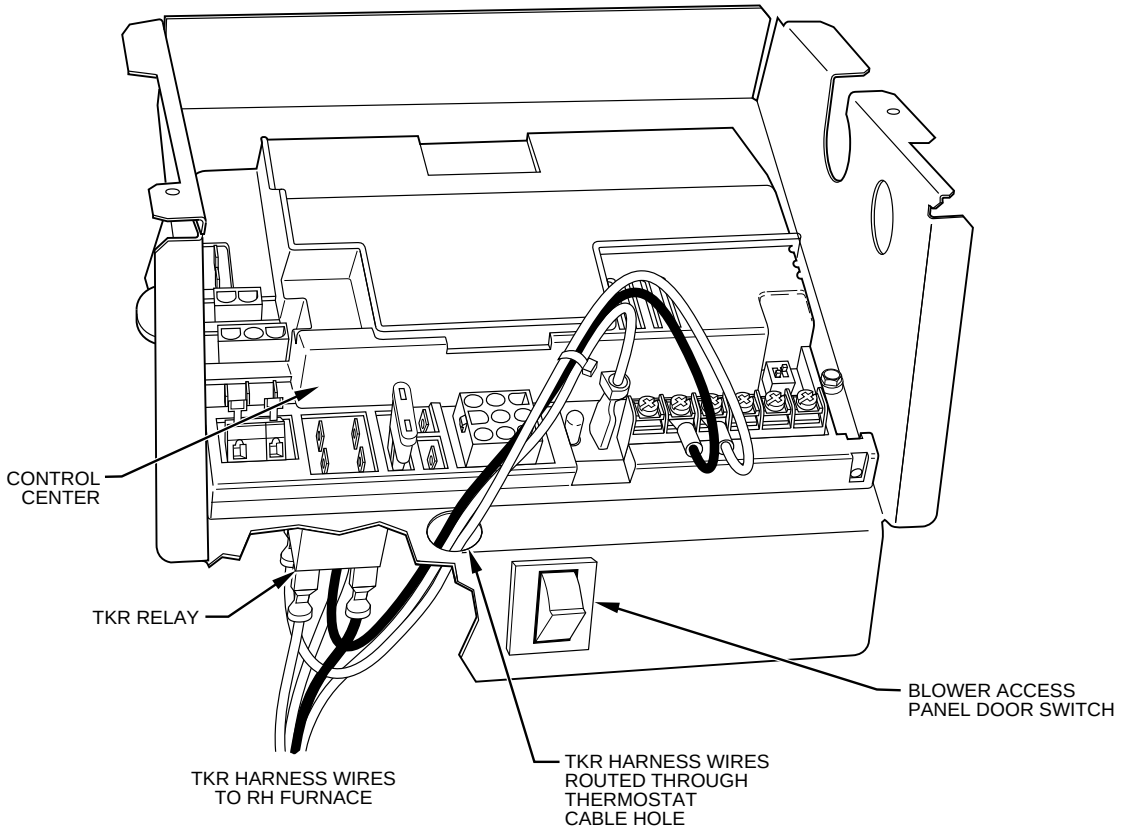

Fig. 21—Twinning Kit Relay Mounted On Control Mounting Bracket For LH Furnace (AFTER Serial No. 2894A00001)

NOTE: See Fig. 8.

a. Disconnect TKR white wire labeled W from LH furnace control center thermostat connection W.

b. Cut terminal off TKR white wire labeled W and strip 1/4 in.

c. Connect 2-stage thermostat W2 connection to TKR white wire labeled W.

NOTE: ALL other 2-stage thermostat connections are to be made to LH furnace control center ONLY.

3. Install LH furnace auxiliary limit switch harness ALS-M.

For Series A/100 and B/111 of Models 58MCA, 58MXA, 340MAV, 350MAV, and 490AAV furnaces, follow the procedure below:

NOTE: LH furnace ALS-M assembly DOES NOT include door switch.

a. Drill 1/8-in. hole in blower housing 8 in. below blower shelf as shown in Fig. 18.

b. Position ALS-M so reset button faces front of furnace.

c. Secure bracket to blower housing using factory-supplied No. 6 X 3/4-in. LG screw.

d. Disconnect red transformer wire from LH furnace door switch.

e. Connect removed red transformer wire to ALS-M wire connector labeled TRANS ASSY.

f. Connect ALS-M connector labeled DOOR SWITCH or SEC 1 to LH furnace door switch, where red wire was removed.

g. Route 2-wire ALS-M connector from LH furnace to RH furnace (furnaces AFTER Serial No. 2894A00001). Refer to Fig. 18 and route wires through unused condensate drain line hole with snap bushing.

→ **For Series C/121 and D/131 of Models 58MCA, 58MXA, 340MAV, 350MAV, and 490AAV and Series A/101 of Models 58MSA, 345MAV, and PG9MAA furnaces, follow the procedure below:**

NOTE: LH furnace ALS-M assembly DOES NOT include door switch.

a. Drill 1/8-in. hole in blower housing 8 in. below blower shelf as shown in Fig. 18.

b. Position ALS-M so reset button faces front of furnace.

c. Secure bracket to blower housing using factory-supplied No. 6 X 3/4-in. LG screw.

d. Disconnect red transformer wire from SEC-1 connection.

e. Cut off 3-16-in. quick-connect terminal from red transformer wire.

f. Strip red wire 1/8 in. and secure factory-supplied 1/4-in. quick-connect terminal.

g. Connect removed red transformer wire to ALS-M wire connector labeled TRANS ASSY.

h. Connect ALS-M connector labeled DOOR SWITCH or SEC 1 to LH furnace control SEC-1 terminal. Cut wire tie and route wire through T'STAT/HUM hole in control box to control board.

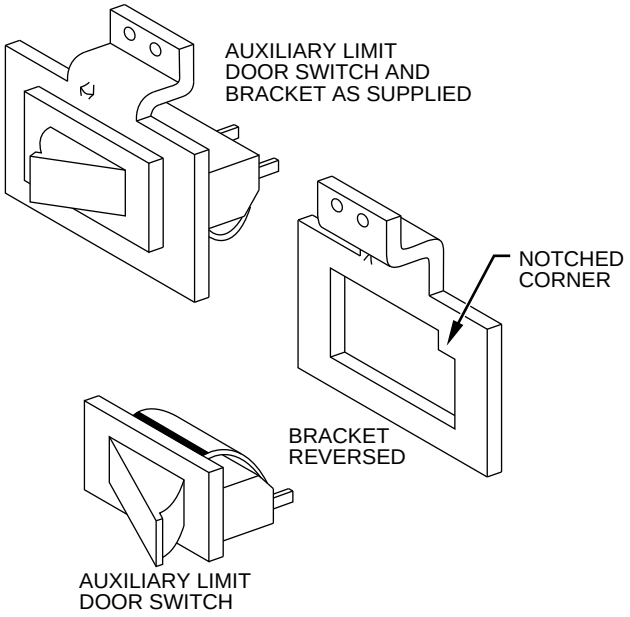

Fig. 22—Reversing Auxiliary Limit Door Switch Bracket

i. Route 2-wire ALS-M connector from LH furnace to RH furnace through unused condensate drain line hole with snap bushing.

4. Install RH furnace (SLAVE) auxiliary door switch and harness (ALS-S/ILK-1).

NOTE: RH furnace ALS-S assembly HAS door switch included.

a. Install auxiliary limit switch (ALS-S).

(1.) Drill 1/8-in. hole in blower housing 8 in. below blower shelf as shown in Fig. 18.

(2.) Position ALS-S so terminals face front of furnace.

(3.) Secure bracket to blower housing using factory-supplied No. 6 X 3/4-in. LG screw.

b. Install auxiliary door switch (ILK-1).

(1.) Remove wires from ALS-S door switch (ILK-1).

(2.) Reverse bracket on ALS-S door switch (ILK-1). (See Fig. 22.)

NOTE: It is easier to remove switch from bracket by pushing the switch away from flexible catch side and rotating the flexible side through the bracket first. Door switch will only fit in bracket 1 way. Pivot side of switch will be located toward notched opening of bracket.

(3.) Reconnect wires to ALS-S door switch (ILK-1).

(4.) Drill 7/32-in. hole in left side of RH furnace blower shelf for mounting door switch as shown in Fig. 18.

(5.) Secure ALS-S door switch (ILK-1) using factory-supplied No. 6 X 3/4-in. LG screw.

c. Connect RH furnace 2-wire ALS-S connector PL6 to LH furnace 2-wire ALS-M connector PL6 that was routed through furnace casings.

5. Select identical blower speed taps at blower motor connections on control center in both furnaces.

⚠ CAUTION: Failure to select identical blower speed taps in both furnaces can result in overheating of furnace components and possible loss of furnace operation and damage to the furnace.

---

6. Dress wires to ensure they do not contact sharp edges or moving parts, nor interfere with blower operation, removal of filters, or operation of switches.

7. Make all thermostat connections to the LH furnace only.

PROCEDURE 3—CONNECT ELECTRICAL COMPONENTS—COOLING

⚠ WARNING: Make no connections between the R 24-vac connector in 1 furnace and the R 24-vac connector in other furnace. Failure to follow this warning can cause a fire, personal injury, or death.

When installing twinned outdoor units with twinned gas furnaces, it is necessary to use a field-supplied 24-vac pilot-duty relay and a field-supplied 24/115-vac transformer as shown in Fig. 7 or 8 to prevent overloading furnace 24/115-vac transformer.

PROCEDURE 4—VENTING

Refer to Installation, Start-Up, and Operating Instructions supplied with each furnace for venting information. Each furnace must always be individually vented. Do not common-vent or breach-vent condensing furnaces. For direct-vent installations, refer to Fig. 23, 24, 25, 26, or 27 for proper termination. It is important that vent terminations be made as shown to avoid recirculation of flue gases.

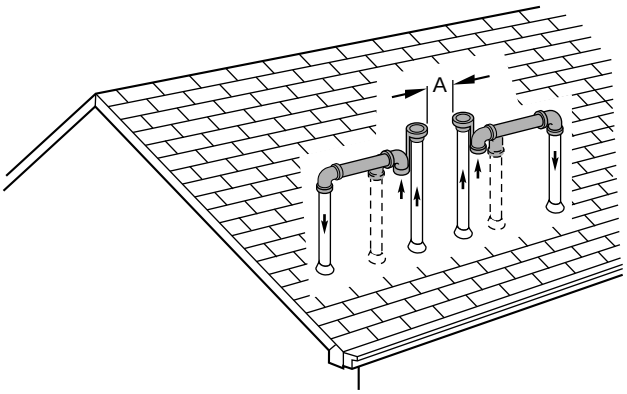

A96128

Fig. 23–Rooftop Termination (Dimension "A" is Touching or 2-In. Maximum Separation)

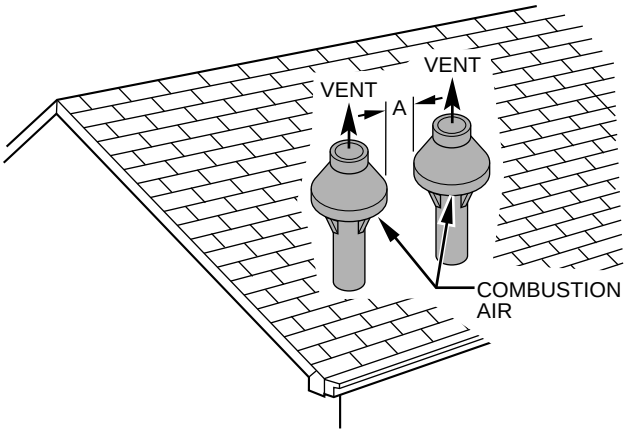

A93056

Fig. 24—Concentric Vent and Combustion-Air Roof Termination (Dimension "A" is Touching or 2-In. Maximum Separation)

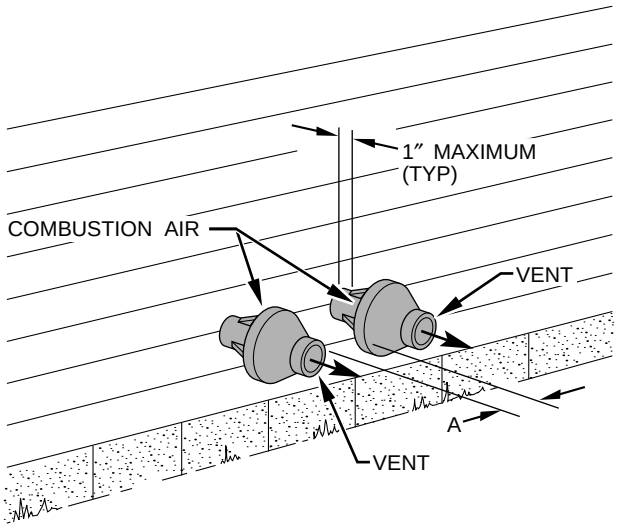

A93057

Fig. 25—Concentric Vent and Combustion-Air Side Termination (Dimension "A" is Touching or 2-In. Maximum Separation)

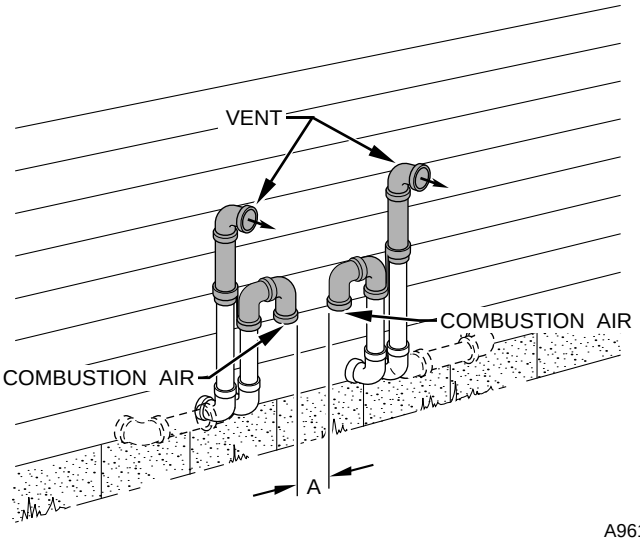

A96129

Fig. 26—Sidewall Termination of 12 in. or Less (Dimension "A" is Touching or 2-In. Maximum Separation)

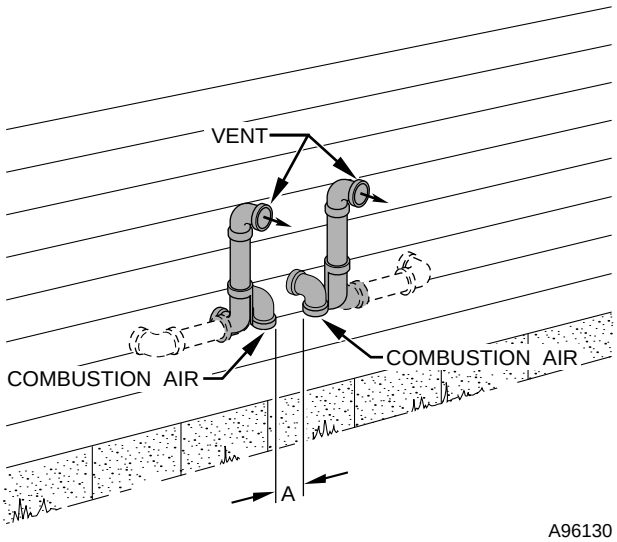

A96130

Fig. 27—Sidewall Termination of More Than 12 in. (Dimension "A" is Touching or 2-In. Maximum Separation)

PROCEDURE 5—GAS SUPPLY PIPING

NOTE: All gas connections must be made through exposed outer side of each furnace. Do not common connect any connection other than supply- and return-air ducts.

Furnaces are recommended to be provided with a single shutoff valve. However, individual shutoff valves may be required by local codes or jurisdictions. Refer to Installation, Start-Up, and Operating Instructions provided with each furnace for additional gas supply information.

PROCEDURE 6—CONDENSATE DRAIN CONNECTIONS (FURNACES AFTER SERIAL NO. 2894A00001)

The condensate trap is factory installed in blower shelf and factory connected for UPFLOW applications. Install condensate trap extension drain such that field drain connection are on the left side for LH (MASTER) furnace and on right side for RH (SLAVE) furnace. (See Fig. 18.)

See furnace Installation, Start-Up, and Operating Instructions for details on attaching field drain.

PROCEDURE 7—ELECTRICAL SUPPLY CONNECTIONS

NOTE: Auxiliary junction box of RH furnace must be relocated to right side.

NOTE: All electrical power connections must be made through exposed outer side of each furnace. Do not common connect any connection other than supply- and return-air ducts.

1. Each furnace shall be connected to its own 115-vac power supply. The twinning kit installation interconnects the furnaces, allowing them to operate as a single furnace. The L1 (black) connection to each furnace must be connected to circuit breakers connected to the same service panel 115-vac phase leg.

   On single-phase (residential) systems, each furnace circuit breaker should be located directly across from each other in service panel, or each furnace circuit breaker should be located on the same side of service panel, but must skip 1 space to be connected to the same leg of the 1-phase power supply.

   On 3-phase (commercial) systems, each furnace circuit breaker should be located directly across from each other in service panel, or each furnace circuit breaker should be located on the same side of service panel, but must skip 2 spaces to be connected to the same leg of the 3-phase power supply.

   The proper 115-vac phasing of furnace connections permits 24-vac transformer phasing as described below.

2. Phasing of the connected 24-vac transformer secondary circuits can be determined with the LED status of both furnaces. See furnace Installation, Start-Up, and Operating Instructions and status code label on blower access panel or main furnace door. The furnaces' transformers' black leads should be connected to PR1 connectors and white leads to PR2 connectors on controls. If 1 or both LEDs are rapidly flashing, disconnect lead at TEST/TWIN terminal of LH furnace and observe LED at each furnace.

   IF:

   a. Both LEDs are on continuously:

      (1.) System phasing is okay.

      (2.) Reverse SEC-1 and SEC-2 in LH furnace.

   b. One or both LEDs are rapidly flashing:

      (1.) Line voltage polarity is reversed.

      (2.) Correct line voltage polarity on furnace(s) with rapidly flashing LED.

   c. One LED is off, 1 LED is on continuously:

      (1.) The 24-vac circuit is inoperative on furnace with LED light off.

      (2.) Check transformers, auxiliary limits, and door switches in both furnaces and correct problem.

3. Reconnect lead at TWIN/TEST terminal of LH furnace and observe LED at each furnace. The LEDs will glow steady for proper phasing.

PROCEDURE 8—START-UP AND ADJUSTMENT

NOTE: Refer to Installation, Start-Up, and Operating Instructions supplied with furnace for detailed information.

1. Shut off all power and gas to both furnaces.
2. Position blower off delay switches on controls in BOTH furnaces to the SAME desired blower off delay in heating. See furnace Installation, Start-Up, and Operating Instruction for further details. If 1 furnace control has blower off delay switches and the other has a fixed jumper wire which sets blower off delay at 135 sec, the control with selectable switches MUST be set for 135 sec off delay.
3. Attach twinning connection diagram label over existing wiring label of LH furnace (located on inside of blower access panel or main furnace door).
4. Attach twinning schematic diagram label over existing wiring label of RH furnace (located on inside of blower access panel or main furnace door).
5. Turn on power and gas to furnaces.
6. Operate furnaces through 2 heating cycles to ensure proper operation.
7. Reinstall all furnace access doors.

PROCEDURE 9—SEQUENCE OF OPERATION

See Fig. 28 and 29 for condensing furnace twinning connection and schematic wiring diagrams while reviewing sequence of operation.

Twinning operation is controlled by LH or MASTER furnace. The TEST/TWIN connection wire ensures the 2 furnaces coordinate their blower operation. When either furnace requires blower operation, both furnace blowers operate at same speed. Both furnaces operate simultaneously in the same mode: heat, cool, or continuous fan. Exceptions can occur if a safety switch on either furnace is opened by a problem (such as pressure switch, flame roll-out switch, main limit switch, twinning kit auxiliary limit switch, or flame-proving sensor). In such a case, the other furnace continues to operate unless open switch is the flame roll-out, main limit, or twinning kit auxiliary limit switch, in which case both furnaces respond.

Before performing component test, disconnect TKR yellow wire labeled TEST from LH furnace control center TEST/TWIN terminal. After removing yellow wire, component test can be initiated on each furnace individually as stated in Installation, Start-Up, and Operating Instructions.

Single-Stage Heat with Single-Stage Gas-Heat Thermostat

See Section III, Procedure 2 for furnace and kit components used.

1. LH (MASTER) furnace control center determines if both furnaces are operating in heating mode.
2. Operation in ALL modes is the same for twinned furnaces as for an individual furnace. See furnace Installation, Start-Up, and Operating Instructions for more information on the sequence of operation.

Two-Stage Heat with 2-Stage Gas-Heat Thermostat

See Section III, Procedure 2 for furnace and kit components used.

1. The 2-stage thermostat determines if furnaces are operating in first-stage heat (LH furnace operates in heat while RH furnace blower operates but RH furnace is not heating) or if furnaces are operating in second-stage heat (both furnaces operate in heat), depending on how many thermostat stages are calling for heat.
2. Operation in all modes is the same for twinned furnaces as for an individual furnace. See furnace Installation, Start-Up, and Operating Instructions for more information on sequence of operation.

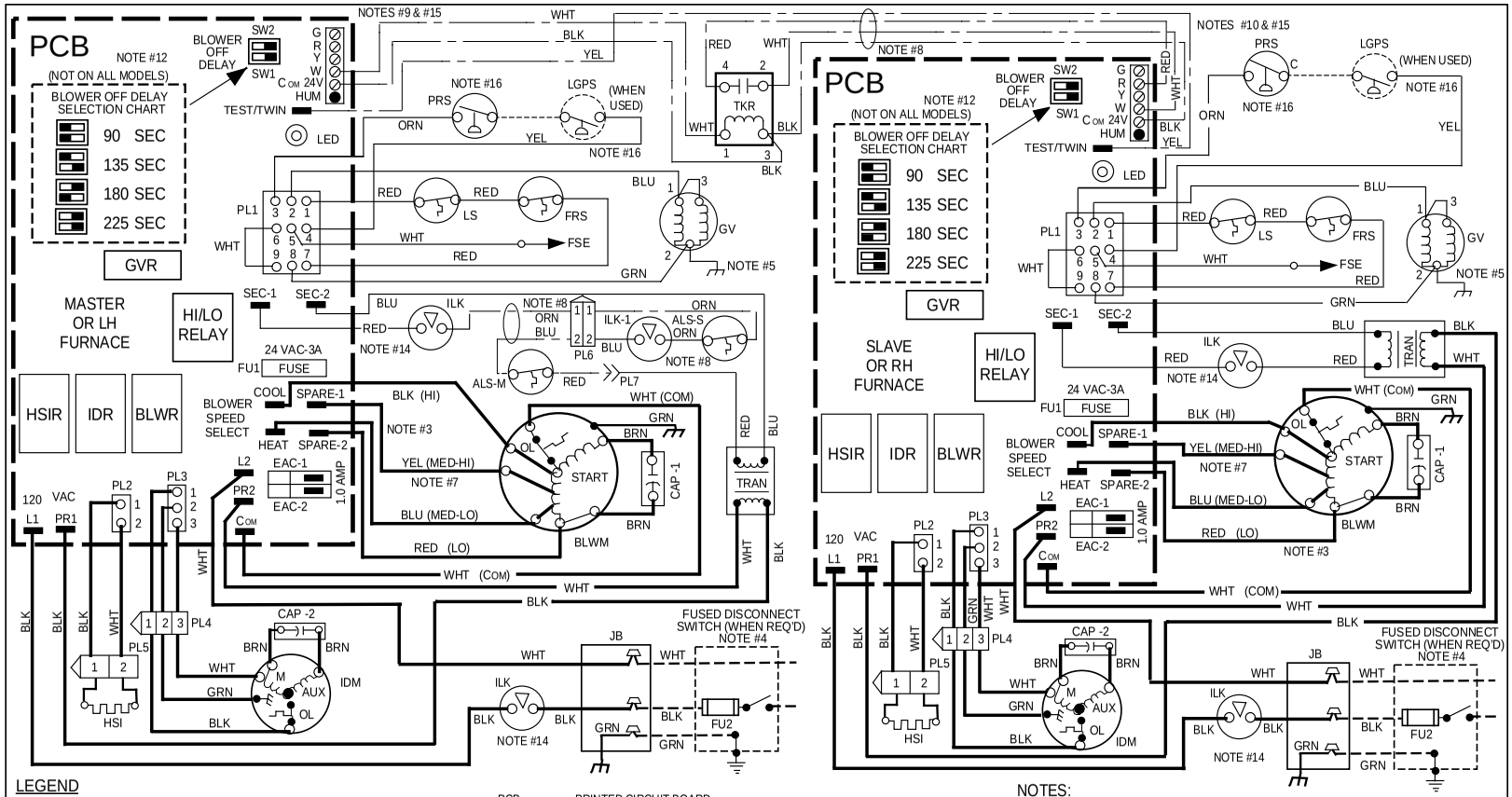

LEGEND

ALS-M	MASTER AUX. LIMIT SW., OVERTEMP-MANUAL RESET, SPST-(N.C.)
ALS-S	SLAVE AUX. LIMIT SW., OVERTEMP-MANUAL RESET, SPST-(N.C.)
BLWR	BLOWER MOTOR RELAY, SPST-(N.O.)
BLWM	BLOWER MOTOR,3- OR 4-SPEED, PERMANENT-SPLIT-CAPACITOR
CAP	CAPACITOR
EAC-1	ELECTRONIC AIR CLEANER CONNECTION (115 VAC 1.0 AMP MAX.)
EAC-2	ELECTRONIC AIR CLEANER CONNECTION (COMMON)
FRS	FLAME ROLLOUT SW. -MANUAL RESET, SPST-(N.C.)
FSE	FLAME-PROVING SENSOR ELECTRODE
FU1	FUSE, 3 AMP, AUTOMOTIVE BLADE TYPE, FACTORY INSTALLED
FU2	FUSE OR CIRCUIT-BREAKER CURRENT-INTERRUPT DEVICE (FIELD INSTALLED & SUPPLIED)
GV	GAS VALVE-REDUNDANT OPERATORS
GVR	GAS VALVE RELAY, DPST-(N.O.)
HI/LO	BLOWER MOTOR SPEED CHANGE RELAY, SPDT
HSI	HOT SURFACE IGNITER (115 VAC)
HSIR	HOT SURFACE IGNITER RELAY, SPST-(N.O.)
HUM	24VAC HUMIDIFIER CONNECTION (0.5 AMP. MAX.)
IDM	INDUCED DRAFT MOTOR
IDR	INDUCER MOTOR RELAY, SPST-(N.O.)
ILK	BLOWER DOOR INTERLOCK SWITCH, SPST-(N.O.)
ILK-1	SLAVE AUX. BLOWER DOOR INTERLOCK SWITCH, SPST-(N.O.)
JB	JUNCTION BOX
LED	LIGHT-EMITTING DIODE FOR STATUS CODES
LGPS	LOW GAS-PRESSURE SWITCH, SPST (N.O.)
LS	LIMIT SWITCH, AUTO RESET, SPST(N.C.)
OL	AUTO-RESET INTERNAL MOTOR OVERLOAD TEMP. SW., SPST (N.C.)
PCB	PRINTED CIRCUIT BOARD
PL1	9-CIRCUIT CONNECTOR
PL2	2-CIRCUIT CONNECTOR
PL3	3-CIRCUIT IDM CONNECTOR
PL4	3-CIRCUIT IDM EXTENSION CONNECTOR
PL5	2-CIRCUIT HSI CONNECTOR
PL6	2-CIRCUIT TWINNING KIT CONNECTOR
PL7	1-CIRCUIT TWINNING KIT IN-LINE SPLICE
PRS	PRESSURE SWITCH, SPST-(N.O.)
TEST / TWIN	COMPONENT TEST & TWIN TERMINAL
TKR	TWINNING KIT RELAY, SPST-(N.O.)
TRAN	TRANSFORMER-115VAC / 24VAC

JUNCTION
UNMARKED TERMINAL
PCB TERMINAL
FACTORY WIRING (115VAC)
FACTORY WIRING (24VAC)
FIELD WIRING (115VAC)
FIELD ACCESSORY WIRING (24VAC)
FIELD WIRING TERMINAL
FIELD GROUND
EQUIPMENT GROUND
FIELD SPLICE
PLUG RECEPTACLE
WIRES PASSING THROUGH HOLES IN CASINGS FROM LH TO RH FURNACE

NOTES:

1. If any of the original equipment wire is replaced use wire rated for 105°C of the same type.
2. Inducer (IDM) and blower (BLWM) motors contain internal auto-reset thermal overload switches (OL).
3. Blower motor speed selections are for average conditions, see installation instructions for details on optimum speed selection.
4. Use only copper wire between the disconnect switch and the furnace junction box (JB).
5. This wire must be connected to furnace sheetmetal for control to prove flame.
6. Replace only with a 3 AMP fuse.
7. Yellow lead (MED-HI) is not on all motors.
8. Passes through holes in casings. ALS-S & ILK-1 are located in the slave furnace blower compartment.
9. Make thermostat connections to only the LH furnace.
10. Make no thermostat connections to RH furnace.
11. Blower-on delay, gas heating 60 seconds, cooling or heat pump 2 seconds.
12. Blower-off delay, gas heating 90, 135, 180 or 225 seconds (135 seconds only on some models), cooling or heat pump 90 seconds.
13. Ignition-lockout will occur after four consecutive unsuccessful trials-for-ignition. Control will auto-reset after three hours.
14. Factory installed door switch (ILK) is located in either the L1 or the SEC-1 circuit.
15. Some models may have spade quick connect terminals.
16. Factory connected when LGPS not used.

322864-101 REV. B

A95229

Fig. 28—Connection Diagram for Twinned Single-Speed Condensing Furnaces

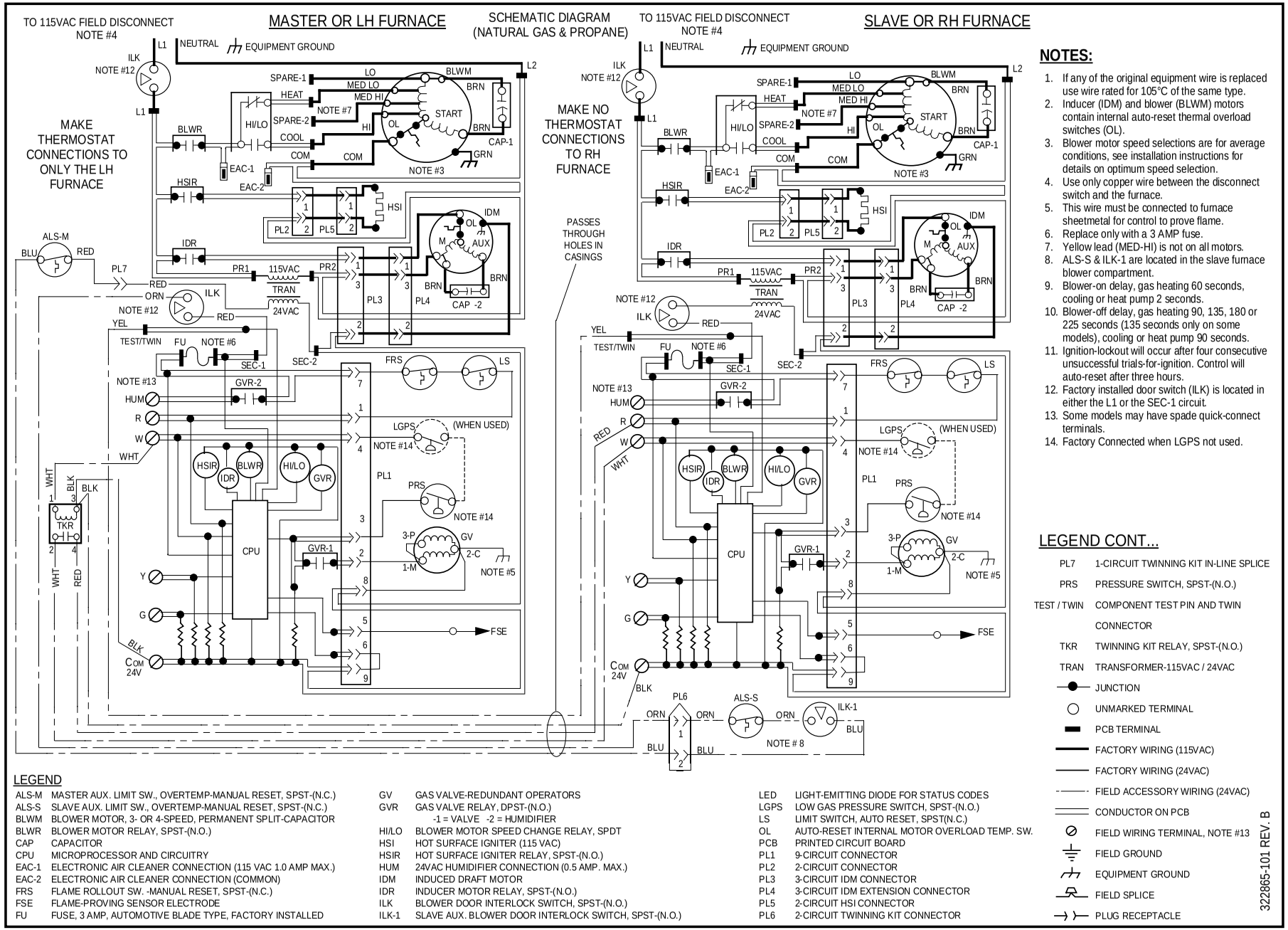

LEGEND

ALS-M	MASTER AUX. LIMIT SW., OVERTEMP-MANUAL RESET, SPST-(N.C.)
ALS-S	SLAVE AUX. LIMIT SW., OVERTEMP-MANUAL RESET, SPST-(N.C.)
BLWM	BLOWER MOTOR, 3- OR 4-SPEED, PERMANENT SPLIT-CAPACITOR
BLWR	BLOWER MOTOR RELAY, SPST-(N.O.)
CAP	CAPACITOR
CPU	MICROPROCESSOR AND CIRCUITRY
EAC-1	ELECTRONIC AIR CLEANER CONNECTION (115 VAC 1.0 AMP MAX.)
EAC-2	ELECTRONIC AIR CLEANER CONNECTION (COMMON)
FRS	FLAME ROLLOUT SW. -MANUAL RESET, SPST-(N.C.)
FSE	FLAME-PROVING SENSOR ELECTRODE
FU	FUSE, 3 AMP, AUTOMOTIVE BLADE TYPE, FACTORY INSTALLED
GV	GAS VALVE-REDUNDANT OPERATORS
GVR	GAS VALVE RELAY, DPST-(N.O.) -1 = VALVE -2 = HUMIDIFIER
HI/LO	BLOWER MOTOR SPEED CHANGE RELAY, SPDT
HSI	HOT SURFACE IGNITER (115 VAC)
HSIR	HOT SURFACE IGNITER RELAY, SPST-(N.O.)
HUM	24VAC HUMIDIFIER CONNECTION (0.5 AMP. MAX.)
IDM	INDUCED DRAFT MOTOR
IDR	INDUCER MOTOR RELAY, SPST-(N.O.)
ILK	BLOWER DOOR INTERLOCK SWITCH, SPST-(N.O.)
ILK-1	SLAVE AUX. BLOWER DOOR INTERLOCK SWITCH, SPST-(N.O.)
LED	LIGHT-EMITTING DIODE FOR STATUS CODES
LGPS	LOW GAS PRESSURE SWITCH, SPST-(N.O.)
LS	LIMIT SWITCH, AUTO RESET, SPST(N.C.)
OL	AUTO-RESET INTERNAL MOTOR OVERLOAD TEMP. SW.
PCB	PRINTED CIRCUIT BOARD
PL1	9-CIRCUIT CONNECTOR
PL2	2-CIRCUIT CONNECTOR
PL3	3-CIRCUIT IDM CONNECTOR
PL4	3-CIRCUIT IDM EXTENSION CONNECTOR
PL5	2-CIRCUIT HSI CONNECTOR
PL6	2-CIRCUIT TWINNING KIT CONNECTOR

A95230

Fig. 29—Schematic Diagram for Twinned Single-Speed Condensing Furnaces

SERVICE TRAINING

Packaged Service Training programs are an excellent way to increase your knowledge of the equipment discussed in this manual, including:

- Unit Familiarization
- Maintenance
- Installation Overview
- Operating Sequence

A large selection of product, theory, and skills programs is available, using popular video-based formats and materials. All include video and/or slides, plus companion book.

Classroom Service Training plus "hands-on" the products in our labs can mean increased confidence that really pays dividends in faster troubleshooting, fewer callbacks. Course descriptions and schedules are in our catalog.

CALL FOR FREE CATALOG 1-800-962-9212

[ ] Packaged Service Training [ ] Classroom Service Training

A94328