Comfortmaker®
Air Conditioning & Heating

D5CERAA

Cooling Only
Sizes 9K to 24K

Product Data

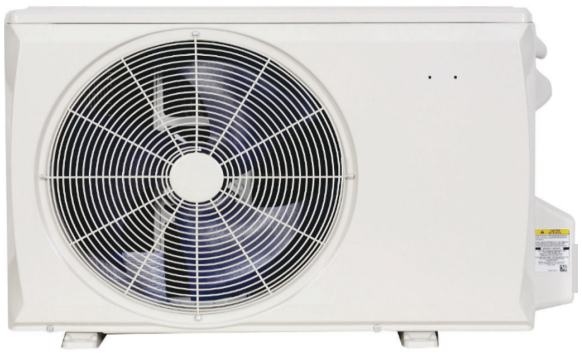

Fig. 1 — Sizes 9K - 24K

NOTE: Images are for illustration purposes **only**. Actual models may differ slightly.

TABLE OF CONTENTS

PAGE

I

INDUSTRY LEADING FEATURES / BENEFITS 1
MODEL NUMBER NOMENCLATURE 3
STANDARD FEATURES AND ACCESSORIES 4
DIMENSIONS - COOLING ONLY 5
CLEARANCES 8
SPECIFICATIONS - COOLING ONLY 9
COMPATIBILITY 10
SYSTEM PERFORMANCE - COOLING ONLY 11
COOLING PERFORMANCE DATA - COOLING ONLY 12
APPLICATION DATA 47
WIRING 47
WIRING DIAGRAMS 50
GUIDE SPECIFICATIONS 53

INDUSTRY LEADING FEATURES / BENEFITS

A PERFECT BALANCE BETWEEN BUDGET LIMITS, ENERGY SAVINGS AND COMFORT.

The **D5CERAA** series ductless systems are a matched combination of an outdoor condensing unit and an indoor fan coil unit connected only by refrigerant tubing and wires.

The ductless system permits creative solutions to design problems such as:

- Add-ons to current space (an office or family room addition)
- Special space requirements
- When changes in the load cannot be handled by the existing system
- When adding air conditioning to spaces that are heated by hydronic or electric heat and have no ductwork
- Historical renovations or any application where preserving the look of the original structure is essential.

The ideal compliment to your ducted system when it is impractical or prohibitively expensive to use ductwork.

The compact indoor fan coil units take up very little space in the room and do not obstruct windows. The fan coils are attractively styled to blend with most room decors. Advanced system components incorporate innovative technology to provide reliable cooling performance at low sound levels.

Inverter Technology

The inverter driven compressor is designed to run at various input power frequencies (Hz) which controls the compressor's motor speed.

Even Temperature – The control package, including the inverter, monitors the outdoor and indoor temperatures as they relate to the selected indoor set point and adjusts the compressor speed to match the load and keep the system operating continuously rather than cycling and creating temperature swings. This translates to higher comfort levels for the occupants.

Rapid Pull Down/Warm-Up – Comfort is increased by the inverter system's ability to ramp up the compressor speed enabling the system to reach the user selected room temperature set point quicker.

Humidity Control – Running the system for longer periods and continuously varying the compressor speed enhances the humidity control.

Individual Room Comfort

Maximum comfort is provided because each space can be controlled individually based on the usage pattern.

Low Sound Levels

When noise is a concern, ductless systems are the answer. The indoor units are whisper quiet. There are no compressors indoors, either in the conditioned space or directly over it, and there is none of the noise usually generated by air being forced through the ductwork.

When sound ordinances and proximity to neighbors demand quiet operation, the **D5CERAA** unit is the right choice. With the inverter technology, these units run at lower speeds most of the time resulting in reduced sound levels.

Inverter Technology – Enhanced Economical Operation

Ductless systems are inherently economical to operate. Individual rooms are heated or cooled only when required, and since the air is delivered directly to the space, there is no need to use additional energy to move the air in the ductwork. This economical operation is enhanced further when the inverter system output matches the load resulting in a more efficient system.

Easy-To-Use Controls

The systems have microprocessor-based controls to provide the ultimate in comfort and efficiency. The user friendly wired and wireless remote controls provide the interface between the user and the unit.

Secure Operation

If security is an issue, outdoor and indoor units are connected only by refrigerant piping and wiring to prevent intruders from crawling through ductwork or wall openings. In addition, since the **D5CERAA** can be installed close to an outside wall, coils are protected from vandals and severe weather.

Fast Installation

This compact ductless system is simple to install. Only wires and piping need to run between the indoor and outdoor units. These units are fast and easy to install ensuring minimal disruption to customers in homes or the workplace. This makes the **D5CERAA** systems the equipment of choice for retrofit applications.

Simple Servicing and Maintenance

Removing the top panel of the outdoor unit provides immediate access to the control compartment, providing the service technician access to the diagnostic LEDs to facilitate the troubleshooting process. In addition, the draw-thru design of the outdoor unit means that dirt accumulates on the outside surface of the coil. Coils can be cleaned quickly from the inside using a pressure hose and detergent.

On the indoor units, service and maintenance expense is reduced due to the permanent easy to clean filters. Also, error codes are displayed on the front panel to alert the user to certain system malfunctions.

Built-in Reliability

Ductless system indoor and outdoor units are designed to provide years of trouble-free operation. Both the indoor and outdoor units are well protected. Whenever the microprocessor detects abnormal conditions, the unit stops and an error code appears.

Inverter systems provide additional reliability due to the soft start.

This refers to the ability of the inverter to start the compressor motor using reduced voltage and reduced current. This feature is beneficial from an electrical standpoint (eliminates current spikes) as well as an overall reliability standpoint due to reduced stress on all associated system components.

Agency Listings

All systems are listed with AHRI (Air conditioning, Heating, and Refrigeration Institute) and are UL certified per UL 60335-2-40 standard.

Manufacturer reserves the right to change, at any time, specifications and designs without notice and without obligations.

MODEL NUMBER NOMENCLATURE

OUTDOOR UNIT

D5C E R A A 12 A A K

D5C = OUTDOOR UNIT

E = ALL

UNIT TYPE
R = OUTDOOR UNIT

A = MAJOR SERIES

SYSTEM TYPE
A = COOLING ONLY

VOLTAGE
J = 115-1-60
K = 208/230-1-60

VARIATIONS
A = STANDARD

MAXIMUM NUMBER OF FAN COIL UNITS THAT CAN BE CONNECTED TO THE OUTDOOR UNIT
A = 1:1

NOMINAL CAPACITY
09 - 0.75 TON
12 - 1 TON
18 - 1.5 TONS
24 - 2 TONS

Use of the AHRI Certified TM Mark indicates a manufacturer's participation in the program For verification of certification for individual products, go to www.ahridirectory.org.

STANDARD FEATURES AND ACCESSORIES

Ease Of Installation	
Low Voltage Controls	S
Comfort Features	
Microprocessor Controls	S
Auto Restart Function	S
Energy Saving Features	
Inverter Driven Compressor	S
Safety And Reliability	
3 Minute Time Delay For Compressor	S
High Compressor Discharge Temperature	S
Low Voltage Protection	S
Compressor Overload Protection	S
Compressor Over Current Protection	S
IPM Module Protection	S
Condenser High Temp Protection in Cooling Mode	S
Aluminum Hydrophilic pre-coated fins	S
Ease Of Service And Maintenance	
Diagnostics	S
Liquid Line Pressure Taps	S
Application Flexibility	
Crankcase Heater	S

Legend

S - Standard
A - Accessory

Outdoor Units

Crankcase Unit

The crankcase heater is standard on all unit sizes. Heater clamps must be placed around the compressor oil stump.

Manufacturer reserves the right to change, at any time, specifications and designs without notice and without obligations.

DIMENSIONS - COOLING ONLY

Table 1 — Dimensions and Weights

System Size		12K 115V	9K	12K	18K	24K
		(115 V)	(208/230 V)	(208/230 V)	(208/230 V)	(208/230 V)
Height (H)	inch	19.49	19.49	19.49	21.85	21.81
	mm	495	495	495	555	554
Width (W)	inch	28.35	28.35	28.35	30.12	31.69
	mm	720	720	720	765	805
Depth (D)	inch	10.63	10.63	10.63	11.93	12.99
	mm	270	270	270	303	330
Weight -Net	lbs.	50.26	46.96	47.84	59.97	67.02
	kg	22.8	21.3	21.7	27.2	30.4

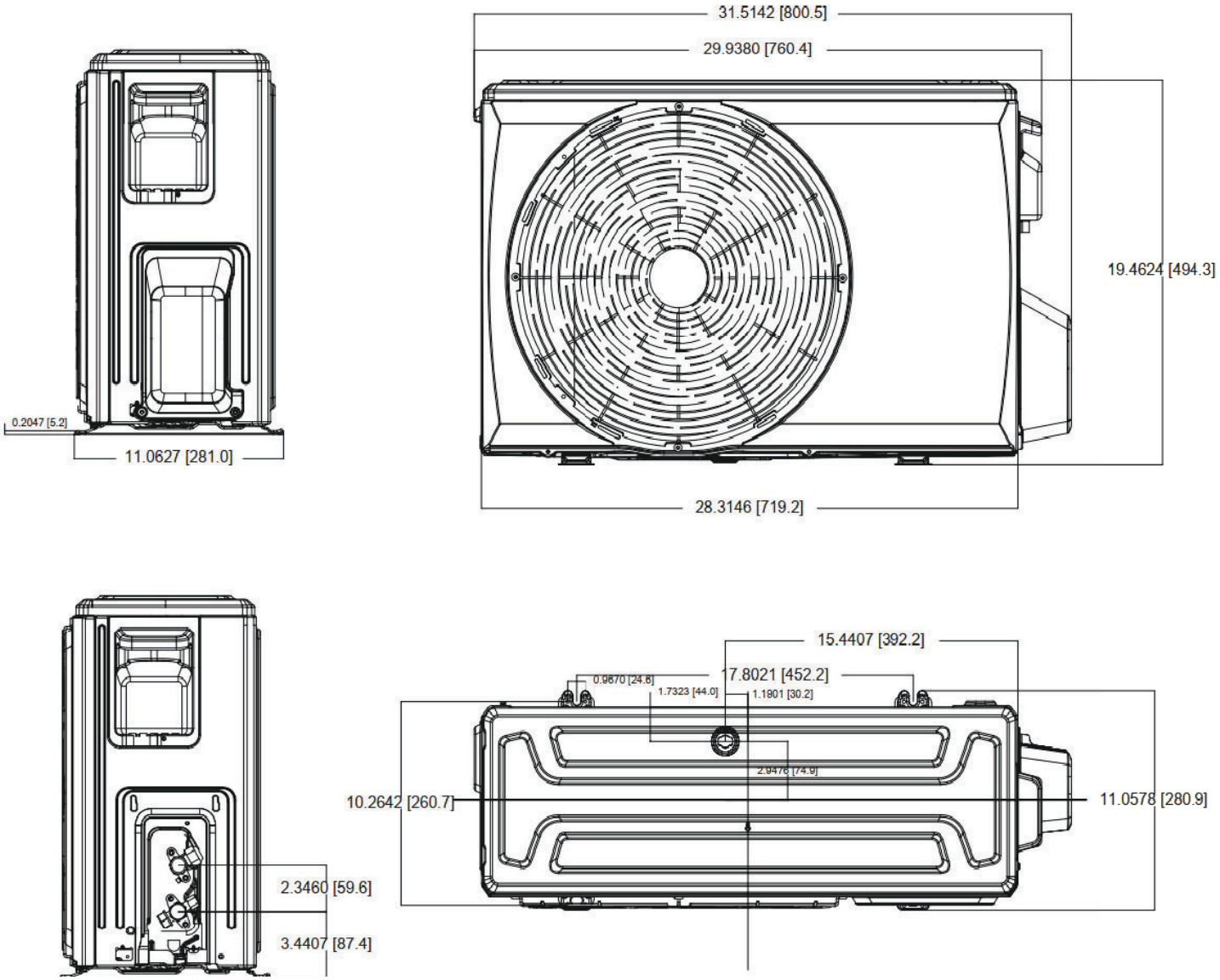

Fig. 2 —Dimensions (9k/12k)

DIMENSIONS (CONT.)

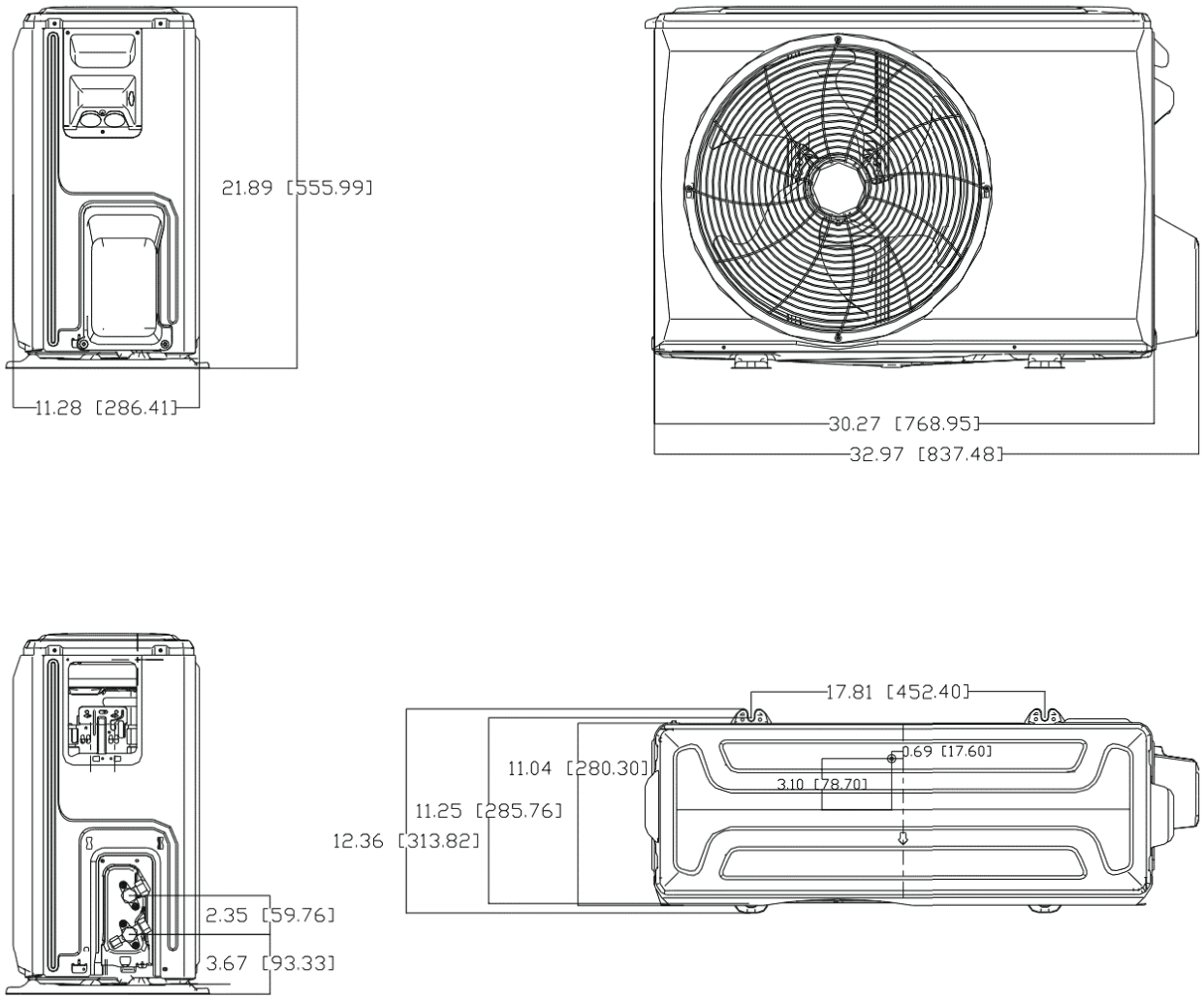

Fig. 3 —Dimensions (18k)

DIMENSIONS (CONT.)

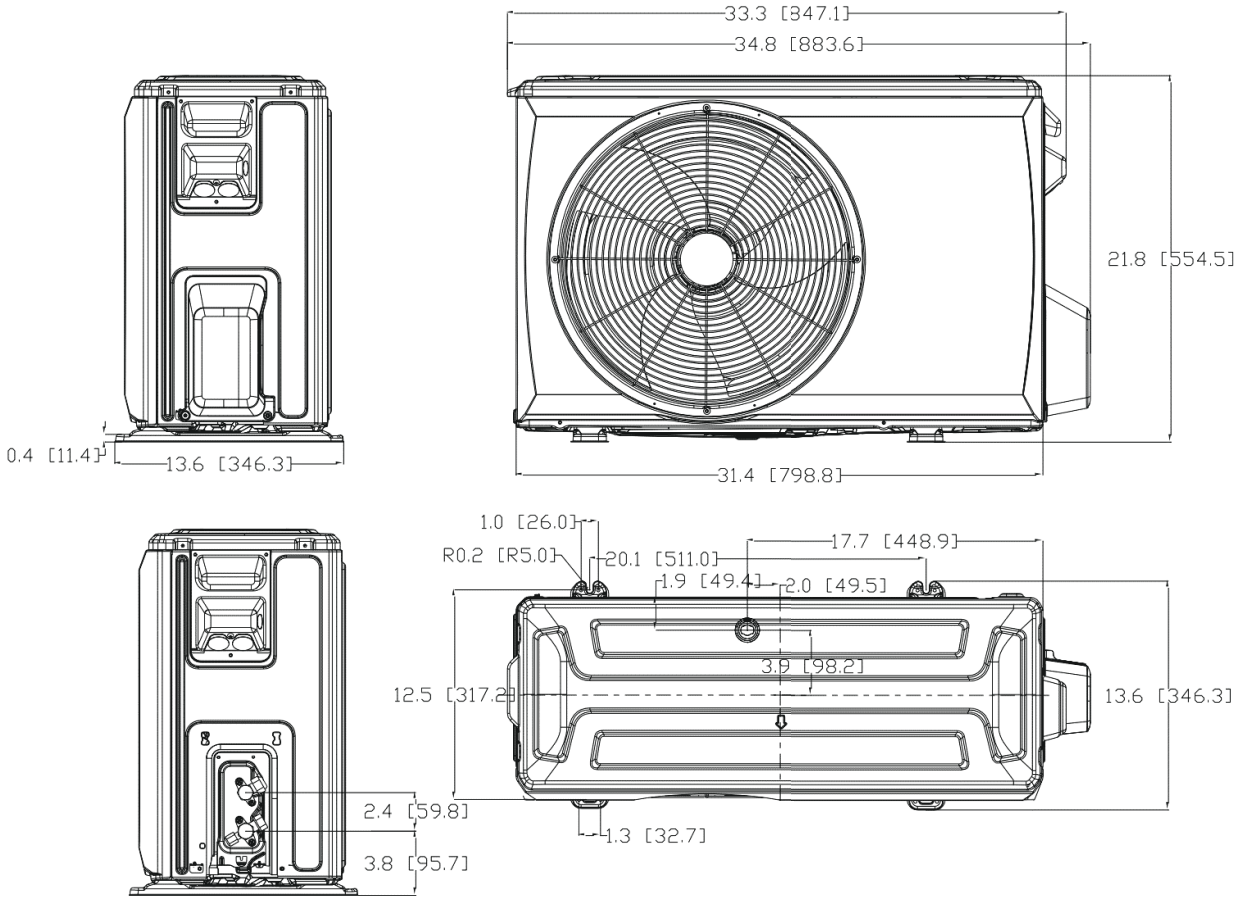

Fig. 4 —Dimensions (24k)

CLEARANCES

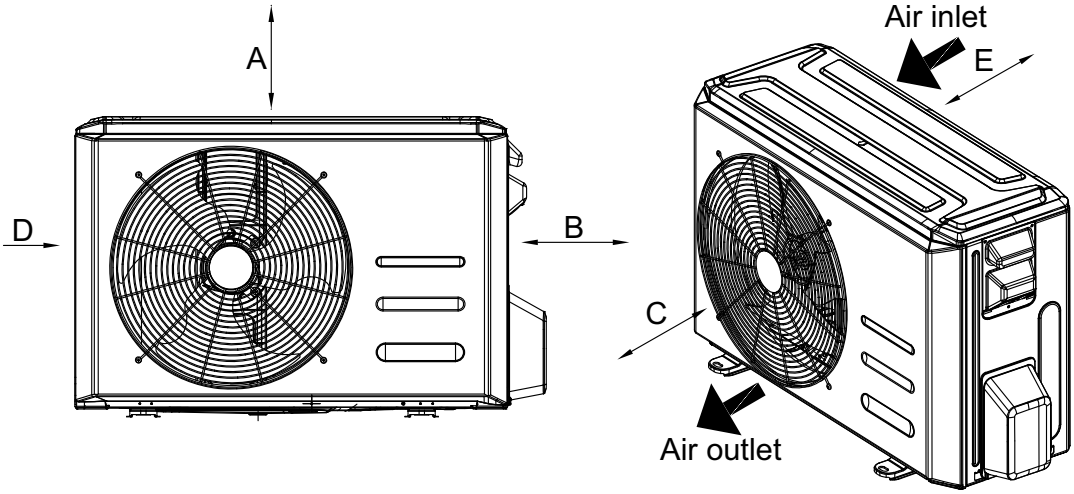

Fig. 5 — Outdoor Unit Clearances

Table 2 — Outdoor Unit Clearance Dimensions

UNIT	MINIMUM VALUE in. (mm)
A	20 (500)
B	14 (350)
C	20 (500)
D	4 (100)
E	4 (100)

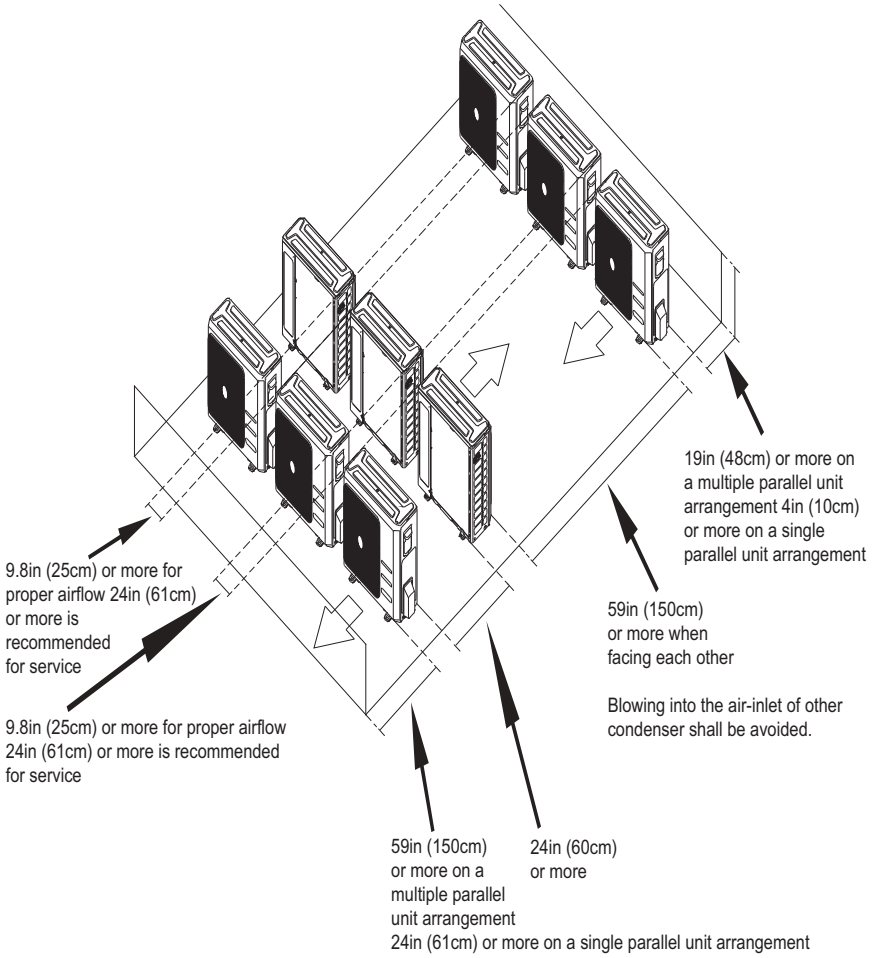

Fig. 6 —Clearances for multiple units

SPECIFICATIONS - COOLING ONLY

Table 3: Specifications - Cooling Only

OUTDOOR MODEL			D5CERAA12AAJ	D5CERAA09AAK	D5CERAA12AAK	D5CERAA18AAK	D5CERAA24AAK
POWER SUPPLY		V;Ph;Hz	115V;1Ph;60HZ	208/230V;1Ph;60HZ	208/230V;1Ph;60HZ	208/230V;1Ph;60HZ	208/230V;1Ph;60HZ
COMPRESSOR SPECIFICATIONS	Model		KSK103D33UEZ3	KSK103D33UEZ3	KSK103D33UEZ3	KSN140D58UFZ	KSN140D58UFZ
	Type		ROTARY	ROTARY	ROTARY	ROTARY	ROTARY
	Brand		GMCC	GMCC	GMCC	GMCC	GMCC
	Capacity	W	2035/3255	2035/3255	2035/3255	4315	4315
		Btu/h	6943/11106	6943/11106	6943/11106	14723	14723
	Input	W	325/826	325/826	325/826	1090	1090
	Rated current	A	2.40/5.65	2.40/5.65	2.40/5.65	7.2	7.2
	Refrigerant Oil		ESTER OIL	ESTER OIL	ESTER OIL	ESTER OIL	ESTER OIL
	Oil Type		VG74	VG74	VG74	VG74	VG74
	Oil Charge	fl. Oz	10.48	10.48	10.48	14.88	14.88
OUTDOOR FAN SPECIFICATIONS	Material	-	Acrylonitrile Styrene +20%GF	Acrylonitrile Styrene +20%GF	Acrylonitrile Styrene +20%GF	Acrylonitrile Styrene +20%GF	Acrylonitrile Styrene +20%GF
	Type	-	ZL-415*129*8-3KN	ZL-415*129*8-3KN	ZL-415*129*8-3KN	ZL-421*133*8-3KN	ZL-434*144*8-3KN
	Diameter	inch	16.3	16.3	16.3	16.6	17.1
		mm	415	415	415	421	434
	Height	inch	5.1	5.1	5.1	5.2	5.7
		mm	129	129	129	133	144
OUTDOOR MOTOR SPECIFICATIONS	Model	-	ZKFN-34-10-1-9	ZKFN-34-10-1-9	ZKFN-34-10-1-9	ZKFN-34-10-1-9	ZKFN-34-10-1-9
	Type	-	DC	DC	DC	DC	DC
	Input	W	35.4	35.4	35.4	35.4	62.0
	Max. input	W	81.3	81.3	81.3	81.3	81.3
	Output	W	26.6	26.6	26.6	26.6	46.5
	FLA	A	0.7	0.5	0.34	0.45	0.62
	Rated HP	HP	0.04	0.04	0.04	0.04	0.06
	Range of current	Amps	0.57~0.85	0.57~0.85	0.57~0.85	0.57~0.85	0.57~0.85
	Rated current	Amps	0.62	0.62	0.62	0.62	0.75
	Speed	rev/min	850/700/600	800/700/600	850/700/600	810/700/450	950/700/600
	Rated RPM	rev/min	850	800	850	810	950
	Insulation class	-	E	E	E	E	E
	Safe class	-	IP24	IP24	IP24	IP24	IP24

Manufacturer reserves the right to change, at any time, specifications and designs without notice and without obligations.

Table 3: Specifications - Cooling Only (Continued)

OUTDOOR MODEL			D5CERAA12AAJ	D5CERAA09AAK	D5CERAA12AAK	D5CERAA18AAK	D5CERAA24AAK
OUTDOOR REFRIGERANT COIL SPECIFICATIONS	Number of rows	Rows	1	1	1	2	2
	Tube outside dia.	inch	0.197	0.197	0.197	0.197	0.197
		mm	Φ5	Φ5	Φ5	Φ5	Φ5
	Nominal Tube Wall	mm	0.00945 (0.24)	0.00945 (0.24)	0.00945 (0.24)	0.00945 (0.24)	0.00945 (0.24)
	Tube Enhancement	(Yes/ No)	Yes	Yes	Yes	Yes	Yes
	Tube Material		Copper	Copper	Copper	Copper	Copper
	Tube pitch (a)x row pitch (b)	inch	0.57x0.49	0.77x0.46	0.57x0.49	0.77x0.46	0.77x0.46
		mm	14.5x12.56	19.5x11.6	14.5x12.56	19.5x11.6	19.5x11.6
	Fin Spacing	FPI	22	22	22	22	22
		mm	1.2	1.2	1.2	1.2	1.2
	Fin type		Louvered	Louvered	Louvered	Louvered	Louvered
	Fin Material		Gold hydrophilic aluminum	Gold hydrophilic aluminum	Gold hydrophilic aluminum	Gold hydrophilic aluminum	Gold hydrophilic aluminum
	Coil length x height x width	inch	29.53x18.27x0.49	29.13x18.43x0.46	29.53x18.27x0.49	29.92x19.96x0.46+29.21x19.96x0.46	34.45x19.96x0.91
		mm	750x464x12.56	740x468x11.6	750x464x12.56	760x507x11.6+742x507x11.6	875x507x23.2
	Number of circuits	#	2	2	2	2	4
	High Burst Pressure	Psi (MPa)	550(3.79)	550(3.79)	550(3.79)	550(3.79)	550(3.79)
	Low Burst Pressure	Psi (MPa)	340(2.34)	340(2.34)	340(2.34)	340(2.34)	340(2.34)
PIPING AND REFRIGERANT INFORMATION	Refrigerant Type	Type	R454B	R454B	R454B	R454B	R454B
	Charge Amount	lb. (kg)	1.23(0.56)	1.08(0.49)	1.23(0.56)	1.72(0.78)	2.01(0.91)
	Additional refrig-erant charge	Oz/ft (g/m)	0.16(15)	0.16(15)	0.16(15)	0.16(15)	0.32(30)
	Liquid Pipe (size - connection type)	In (mm)	1/4in (6.35mm)	1/4in (6.35mm)	1/4in (6.35mm)	1/4in (6.35mm)	3/8in (9.52mm)
	Suction Pipe (size - connection type)	In (mm)	3/8in (9.52mm)	3/8in (9.52mm)	3/8in (9.52mm)	1/2in (12.7mm)	5/8in (15.9mm)
	Min. Piping Length	ft. (m)	10 (3)	10 (3)	10 (3)	10 (3)	10 (3)
	Standard Piping Length	ft. (m)	24.6 (7.5)	24.6 (7.5)	24.6 (7.5)	24.6 (7.5)	24.6 (7.5)
	Max. Piping Length with no additional refrig-erant charge per System	ft. (m)	24.6 (7.5)	24.6 (7.5)	24.6 (7.5)	24.6 (7.5)	24.6 (7.5)
	Total Maximum Piping Length per system	ft. (m)	82.02(25)	82.02(25)	82.02(25)	98.42(30)	164.04(50)
	Max. out-door-indoor height difference (OU higher than IU)	ft. (m)	49.21(15)	49.21(15)	49.21(15)	65.62(20)	82.02(25)
	Max. out-door-indoor height difference (IU higher than OU)	ft. (m)	49.21(15)	49.21(15)	49.21(15)	65.62(20)	82.02(25)

COMPATIBILITY

Table 4 — Compatible Indoor Units

MODEL	INDOOR UNIT	OUTDOOR UNIT
12K (115V)	D5FEHAA12XCJ	D5CERAA12AAJ
9K	D5FEHAA09XCK	D5CERAA09AAK
12K	D5FEHAA12XCK	D5CERAA12AAK
18K	D5FEHAA18XCK	D5CERAA18AAK
24K	D5FEHAA24XCK	D5CERAA24AAK

Manufacturer reserves the right to change, at any time, specifications and designs without notice and without obligations.

SYSTEM PERFORMANCE - COOLING ONLY

Table 5: System Performance - Cooling Only

INDOOR UNIT TYPE			ENTRY TIER HIGH WALL CO				
INDOOR MODEL			D5FEHAA12XCJ	D5FEHAA09XCK	D5FEHAA12XCK	D5FEHAA18XCK	D5FEHAA24XCK
OUTDOOR MODEL			D5CERAA12AAJ	D5CERAA09AAK	D5CERAA12AAK	D5CERAA18AAK	D5CERAA24AAK
POWER SUPPLY		V; Ph;Hz	115V; 1Ph;60HZ	208/230V;1 Ph;60HZ	208/230V; 1Ph;60HZ	208/230V; 1Ph;60HZ	208/230V; 1Ph;60HZ
PERFORMANCE DATA	Cooling Rated Capacity (DOE A2 - 95°F)	Btu/h	11500	9000	11500	17500	22000
	Cooling Capacity Range	Btu/h	2600~12100	2200~11200	2600~12300	3100~18400	5800~22600
	SEER2	Btu/h.W	21.5	20.5	21	22.2	21.1
	EER2 (DOE A2 - 95°F)	Btu/h.W	12	12.5	12	11.7	10.2
	Heating Rated Capacity (DOE H12 - 47°F)	Btu/h	N/A	N/A	N/A	N/A	N/A
	Heating Capacity Range	Btu/h	N/A	N/A	N/A	N/A	N/A
	COP (DOE H12 - 47°F)	W/W	N/A	N/A	N/A	N/A	N/A
	HSPF2 IV	Btu/h.W	N/A	N/A	N/A	N/A	N/A
	HSPF2 V	Btu/h.W	N/A	N/A	N/A	N/A	N/A
	Cooling Rated Capacity (DOE B2 - 82°F)	Btu/h	12000	9500	12200	18600	24000
	EER2 (DOE B2 - 82°F)	Btu/h.W	14.7	16.3	14.4	14.5	13.7
	Heating Rated Capacity (DOE H32 - 17°F)	Btu/h	N/A	N/A	N/A	N/A	N/A
	COP (DOE H32 - 17°F)	W/W	N/A	N/A	N/A	N/A	N/A
	Heating Maximum Capacity (17°F)	Btu/h	N/A	N/A	N/A	N/A	N/A
	Heating Rated Capacity (ODE H42 - 5°F)	Btu/h	N/A	N/A	N/A	N/A	N/A
	COP (DOE H42 - 5°F)	W/W	N/A	N/A	N/A	N/A	N/A
	Heating Maximum Capacity (5°F)	Btu/h	N/A	N/A	N/A	N/A	N/A

Manufacturer reserves the right to change, at any time, specifications and designs without notice and without obligations.

COOLING PERFORMANCE DATA - COOLING ONLY

Table 6: Cooling Performance 115V, 12K

AIRFLOW (CFM)	OUTDOOR DB °F (°C)	ID WB°F (°C)	60.8°F(16.0°C)					64.4°F(18.0°C)					67°F(19.4°C)					71.6°F(22.0°C)				
		ID DB°F (°C)	73.4°F (23.0°C)	77.0°F (25.0°C)	80.0°F (26.7°C)	80.6°F (27.0°C)	84.2°F (29.0°C)	73.4°F (23.0°C)	77.0°F (25.0°C)	80.0°F 26.7°C)	80.6°F (27.0°C)	84.2°F (29.0°C)	73.4°F (23.0°C)	77.0°F (25.0°C)	80.0°F (26.7°C)	80.6°F (27.0°C)	84.2°F (29.0°C)	73.4°F (23.0°C)	77.0°F(25.0°C)	80.0°F (26.7°C)	80.6°F (27.0°C)	84.2°F (29.0°C)
212	5°F(-15.0°C)	TC	10286	10300	10311	10311	10325	10906	10919	10930	10932	10945	11558	11573	11585	11588	11601	12254	12267	12281	12283	12298
		S/T	0.45	0.53	0.61	0.61	0.69	0.48	0.56	0.64	0.64	0.73	0.51	0.60	0.68	0.68	0.78	0.54	0.63	0.72	0.72	0.82
		PI	0.46	0.46	0.46	0.46	0.46	0.48	0.48	0.48	0.48	0.49	0.51	0.51	0.51	0.51	0.51	0.54	0.54	0.54	0.54	0.55
	14°F(-10.0°C)	TC	11116	11131	11143	11144	11159	11786	11800	11812	11814	11828	12490	12506	12520	12523	12537	13243	13257	13272	13274	13290
		S/T	0.45	0.53	0.61	0.61	0.69	0.48	0.57	0.64	0.64	0.73	0.51	0.60	0.68	0.68	0.78	0.54	0.64	0.72	0.72	0.82
		PI	0.45	0.45	0.45	0.45	0.45	0.47	0.48	0.48	0.48	0.48	0.50	0.50	0.50	0.50	0.50	0.53	0.53	0.53	0.53	0.53
	17°F(-8.3°C)	TC	11393	11408	11420	11421	11436	12079	12094	12106	12108	12122	12801	12818	12832	12834	12849	13572	13587	13602	13604	13621
		S/T	0.46	0.54	0.61	0.61	0.69	0.48	0.57	0.64	0.64	0.74	0.51	0.60	0.68	0.68	0.78	0.54	0.64	0.72	0.72	0.83
		PI	0.44	0.45	0.45	0.45	0.45	0.47	0.47	0.47	0.47	0.47	0.50	0.50	0.50	0.50	0.50	0.53	0.53	0.53	0.53	0.53
	23°F(-5.0°C)	TC	11104	11119	11131	11132	11147	11773	11787	11799	11801	11815	12477	12493	12507	12509	12523	13228	13243	13257	13259	13276
		S/T	0.46	0.54	0.61	0.61	0.70	0.49	0.57	0.65	0.65	0.74	0.52	0.60	0.69	0.69	0.78	0.55	0.64	0.73	0.73	0.83
		PI	0.49	0.49	0.49	0.49	0.49	0.52	0.52	0.52	0.52	0.52	0.55	0.55	0.55	0.55	0.55	0.58	0.58	0.58	0.58	0.59
	35°F(1.7°C)	TC	10527	10541	10552	10553	10567	11161	11174	11185	11188	11201	11828	11843	11856	11859	11872	12541	12554	12568	12570	12585
		S/T	0.46	0.54	0.61	0.61	0.70	0.49	0.57	0.65	0.65	0.74	0.52	0.61	0.69	0.69	0.79	0.55	0.64	0.73	0.73	0.83
		PI	0.58	0.58	0.58	0.58	0.58	0.61	0.62	0.62	0.62	0.62	0.65	0.65	0.65	0.65	0.65	0.69	0.69	0.69	0.69	0.69
	41°F(5.0°C)	TC	10440	10454	10466	10466	10480	11070	11083	11094	11096	11109	11731	11746	11759	11761	11775	12438	12451	12465	12467	12482
		S/T	0.46	0.54	0.62	0.62	0.70	0.49	0.57	0.65	0.65	0.74	0.52	0.61	0.69	0.69	0.79	0.55	0.65	0.73	0.73	0.84
		PI	0.49	0.49	0.49	0.49	0.49	0.52	0.52	0.52	0.52	0.52	0.55	0.55	0.55	0.55	0.55	0.58	0.58	0.58	0.58	0.58
	47°F(8.3°C)	TC	10354	10368	10379	10380	10394	10978	10991	11002	11004	11017	11634	11649	11662	11664	11677	12335	12348	12362	12364	12379
		S/T	0.46	0.54	0.62	0.62	0.70	0.49	0.58	0.65	0.65	0.75	0.52	0.61	0.69	0.69	0.79	0.55	0.65	0.74	0.74	0.84
		PI	0.39	0.40	0.40	0.40	0.40	0.42	0.42	0.42	0.42	0.42	0.44	0.44	0.44	0.44	0.45	0.47	0.47	0.47	0.47	0.47
	50°F(10.0°C)	TC	10398	10412	10423	10424	10438	11025	11038	11049	11051	11064	11684	11699	11712	11714	11727	12387	12401	12414	12416	12432
		S/T	0.47	0.55	0.62	0.62	0.71	0.49	0.58	0.66	0.66	0.75	0.52	0.61	0.70	0.70	0.79	0.55	0.65	0.74	0.74	0.84
		PI	0.41	0.41	0.41	0.41	0.41	0.43	0.43	0.43	0.43	0.43	0.46	0.46	0.46	0.46	0.46	0.49	0.49	0.49	0.49	0.49
	59°F(15.0°C)	TC	10531	10545	10556	10557	10571	11165	11179	11190	11192	11205	11832	11848	11861	11863	11876	12545	12559	12573	12575	12590
		S/T	0.47	0.55	0.62	0.62	0.71	0.50	0.58	0.66	0.66	0.75	0.53	0.62	0.70	0.70	0.80	0.56	0.65	0.74	0.74	0.85
		PI	0.45	0.45	0.45	0.45	0.45	0.48	0.48	0.48	0.48	0.48	0.51	0.51	0.51	0.51	0.51	0.54	0.54	0.54	0.54	0.54
	68°F(20.0°C)	TC	10663	10678	10689	10690	10704	11306	11319	11330	11333	11346	11981	11997	12010	12013	12026	12703	12717	12731	12733	12749
		S/T	0.48	0.56	0.64	0.64	0.73	0.51	0.60	0.68	0.68	0.77	0.54	0.63	0.72	0.72	0.82	0.57	0.67	0.76	0.76	0.87
		PI	0.49	0.49	0.49	0.49	0.49	0.52	0.52	0.52	0.52	0.52	0.55	0.55	0.55	0.55	0.56	0.59	0.59	0.59	0.59	0.59
	77°F(25.0°C)	TC	10796	10810	10822	10822	10837	11446	11460	11471	11474	11487	12130	12146	12160	12162	12175	12861	12875	12889	12891	12907
		S/T	0.49	0.57	0.65	0.65	0.74	0.52	0.61	0.69	0.69	0.78	0.55	0.64	0.73	0.73	0.83	0.58	0.68	0.77	0.77	0.88
		PI	0.53	0.54	0.54	0.54	0.54	0.57	0.57	0.57	0.57	0.57	0.60	0.60	0.60	0.60	0.60	0.64	0.64	0.64	0.64	0.64

Manufacturer reserves the right to change, at any time, specifications and designs without notice and without obligations.

Table 6: Cooling Performance 115V, 12K (Continued)

AIRFLOW (CFM)	OUTDOOR DB °F (°C)	ID WB°F (°C)	60.8°F(16.0°C)					64.4°F(18.0°C)					67°F(19.4°C)					71.6°F(22.0°C)				
		ID DB°F (°C)	73.4°F (23.0°C)	77.0°F (25.0°C)	80.0°F (26.7°C)	80.6°F (27.0°C)	84.2°F (29.0°C)	73.4°F (23.0°C)	77.0°F (25.0°C)	80.0°F 26.7°C)	80.6°F (27.0°C)	84.2°F (29.0°C)	73.4°F (23.0°C)	77.0°F (25.0°C)	80.0°F (26.7°C)	80.6°F (27.0°C)	84.2°F (29.0°C)	73.4°F (23.0°C)	77.0°F(25.0°C)	80.0°F (26.7°C)	80.6°F (27.0°C)	84.2°F (29.0°C)
212	82°F(27.8°C)	TC	10739	10754	10765	10766	10780	11386	11400	11411	11413	11427	12067	12082	12096	12098	12111	12794	12807	12821	12823	12839
		S/T	0.49	0.58	0.66	0.66	0.75	0.52	0.61	0.70	0.70	0.79	0.55	0.65	0.74	0.74	0.84	0.59	0.69	0.78	0.78	0.89
		PI	0.59	0.59	0.59	0.59	0.59	0.62	0.62	0.62	0.62	0.63	0.66	0.66	0.66	0.66	0.66	0.70	0.70	0.70	0.70	0.70
	86°F(30.0°C)	TC	10529	10543	10555	10555	10569	11164	11177	11188	11190	11203	11831	11846	11859	11861	11875	12543	12557	12571	12573	12588
		S/T	0.50	0.59	0.67	0.67	0.76	0.53	0.62	0.71	0.71	0.80	0.56	0.66	0.75	0.75	0.85	0.59	0.70	0.79	0.79	0.90
		PI	0.67	0.67	0.67	0.67	0.67	0.71	0.71	0.71	0.71	0.71	0.75	0.75	0.75	0.75	0.75	0.80	0.80	0.80	0.80	0.80
	95°F(35.0°C)	TC	10057	10070	10081	10082	10095	10663	10676	10686	10688	10701	11300	11315	11327	11329	11342	11981	11994	12007	12009	12024
		S/T	0.50	0.59	0.67	0.67	0.76	0.53	0.62	0.71	0.71	0.80	0.56	0.66	0.75	0.75	0.85	0.59	0.70	0.79	0.79	0.90
		PI	0.85	0.85	0.85	0.85	0.85	0.90	0.90	0.90	0.90	0.90	0.95	0.96	0.96	0.96	0.96	1.01	1.01	1.01	1.01	1.02
	104°F(40.0°C)	TC	9132	9144	9154	9154	9166	9682	9693	9703	9705	9716	10260	10274	10285	10287	10299	10879	10890	10902	10904	10918
		S/T	0.51	0.60	0.68	0.68	0.78	0.54	0.64	0.72	0.72	0.82	0.57	0.67	0.77	0.77	0.87	0.61	0.71	0.81	0.81	0.93
		PI	0.88	0.88	0.88	0.88	0.88	0.93	0.93	0.93	0.93	0.93	0.99	0.99	0.99	0.99	0.99	1.05	1.05	1.05	1.05	1.05
	110°F(43.0°C)	TC	8576	8588	8597	8598	8609	9093	9104	9113	9115	9126	9637	9649	9660	9662	9672	10217	10228	10239	10241	10254
		S/T	0.53	0.62	0.71	0.71	0.81	0.56	0.66	0.75	0.75	0.85	0.60	0.70	0.79	0.79	0.91	0.63	0.74	0.84	0.84	0.96
		PI	0.89	0.90	0.90	0.90	0.90	0.95	0.95	0.95	0.95	0.95	1.01	1.01	1.01	1.01	1.01	1.07	1.07	1.07	1.07	1.07
	115°F(46.0°C)	TC	6798	6807	6815	6815	6824	7208	7216	7223	7225	7233	7638	7648	7657	7658	7667	8099	8107	8116	8118	8128
		S/T	0.54	0.63	0.72	0.72	0.82	0.57	0.67	0.76	0.76	0.86	0.60	0.71	0.80	0.80	0.92	0.64	0.75	0.85	0.85	0.97
		PI	0.76	0.76	0.77	0.77	0.77	0.81	0.81	0.81	0.81	0.81	0.86	0.86	0.86	0.86	0.86	0.91	0.91	0.91	0.91	0.91
	122°F(50.0°C)	TC	4427	4433	4438	4438	4444	4694	4699	4704	4705	4710	4974	4981	4986	4987	4993	5274	5280	5285	5286	5293
		S/T	0.55	0.64	0.73	0.73	0.83	0.58	0.68	0.78	0.78	0.88	0.62	0.72	0.82	0.82	0.94	0.65	0.77	0.87	0.87	0.99
		PI	0.59	0.59	0.59	0.59	0.59	0.63	0.63	0.63	0.63	0.63	0.66	0.66	0.66	0.66	0.67	0.70	0.70	0.70	0.70	0.71
253	5°F(-15.0°C)	TC	10521	10536	10547	10547	10562	11156	11169	11180	11182	11195	11822	11837	11851	11853	11866	12534	12548	12562	12564	12579
		S/T	0.46	0.54	0.62	0.62	0.71	0.49	0.58	0.66	0.66	0.75	0.52	0.61	0.70	0.70	0.79	0.55	0.65	0.74	0.74	0.84
		PI	0.47	0.47	0.47	0.47	0.47	0.49	0.50	0.50	0.50	0.50	0.52	0.52	0.53	0.53	0.53	0.56	0.56	0.56	0.56	0.56
	14°F(-10.0°C)	TC	11371	11386	11398	11399	11414	12056	12070	12082	12084	12099	12776	12793	12807	12809	12824	13546	13561	13575	13577	13594
		S/T	0.47	0.55	0.62	0.62	0.71	0.49	0.58	0.66	0.66	0.75	0.52	0.61	0.70	0.70	0.79	0.55	0.65	0.74	0.74	0.84
		PI	0.46	0.46	0.46	0.46	0.46	0.49	0.49	0.49	0.49	0.49	0.51	0.51	0.52	0.52	0.52	0.55	0.55	0.55	0.55	0.55
	17°F(-8.3°C)	TC	11654	11669	11682	11682	11698	12356	12370	12383	12385	12400	13094	13111	13126	13128	13143	13883	13898	13913	13915	13933
		S/T	0.47	0.55	0.62	0.62	0.71	0.49	0.58	0.66	0.66	0.75	0.52	0.62	0.70	0.70	0.80	0.56	0.65	0.74	0.74	0.84
		PI	0.45	0.46	0.46	0.46	0.46	0.48	0.48	0.48	0.48	0.48	0.51	0.51	0.51	0.51	0.51	0.54	0.54	0.54	0.54	0.54
	23°F(-5.0°C)	TC	11358	11374	11386	11386	11402	12043	12057	12069	12071	12086	12762	12779	12793	12795	12810	13531	13546	13561	13563	13580
		S/T	0.47	0.55	0.63	0.63	0.71	0.50	0.58	0.66	0.66	0.76	0.53	0.62	0.70	0.70	0.80	0.56	0.66	0.74	0.74	0.85
		PI	0.50	0.50	0.50	0.50	0.50	0.53	0.53	0.53	0.53	0.53	0.56	0.56	0.56	0.56	0.56	0.60	0.60	0.60	0.60	0.60

Manufacturer reserves the right to change, at any time, specifications and designs without notice and without obligations.

Table 6: Cooling Performance 115V, 12K (Continued)

AIRFLOW (CFM)	OUTDOOR DB °F (°C)	ID WB°F (°C)	60.8°F(16.0°C)					64.4°F(18.0°C)					67°F(19.4°C)					71.6°F(22.0°C)				
		ID DB°F (°C)	73.4°F (23.0°C)	77.0°F (25.0°C)	80.0°F (26.7°C)	80.6°F (27.0°C)	84.2°F (29.0°C)	73.4°F (23.0°C)	77.0°F (25.0°C)	80.0°F 26.7°C)	80.6°F (27.0°C)	84.2°F (29.0°C)	73.4°F (23.0°C)	77.0°F (25.0°C)	80.0°F (26.7°C)	80.6°F (27.0°C)	84.2°F (29.0°C)	73.4°F (23.0°C)	77.0°F(25.0°C)	80.0°F (26.7°C)	80.6°F (27.0°C)	84.2°F (29.0°C)
253	35°F(1.7°C)	TC	10768	10782	10794	10794	10809	11417	11430	11441	11444	11457	12099	12114	12128	12130	12144	12828	12841	12855	12857	12873
		S/T	0.47	0.55	0.63	0.63	0.72	0.50	0.59	0.67	0.67	0.76	0.53	0.62	0.71	0.71	0.80	0.56	0.66	0.75	0.75	0.85
		PI	0.59	0.59	0.59	0.59	0.60	0.63	0.63	0.63	0.63	0.63	0.67	0.67	0.67	0.67	0.67	0.71	0.71	0.71	0.71	0.71
	41°F(5.0°C)	TC	10679	10694	10705	10706	10720	11323	11336	11347	11350	11363	11999	12015	12028	12031	12044	12722	12736	12750	12752	12768
		S/T	0.47	0.55	0.63	0.63	0.72	0.50	0.59	0.67	0.67	0.76	0.53	0.62	0.71	0.71	0.81	0.56	0.66	0.75	0.75	0.85
		PI	0.50	0.50	0.50	0.50	0.50	0.53	0.53	0.53	0.53	0.53	0.56	0.56	0.56	0.56	0.56	0.59	0.59	0.60	0.60	0.60
	47°F(8.3°C)	TC	10591	10605	10617	10617	10631	11229	11243	11254	11256	11269	11900	11916	11929	11931	11944	12617	12631	12645	12647	12662
		S/T	0.47	0.56	0.63	0.63	0.72	0.50	0.59	0.67	0.67	0.76	0.53	0.62	0.71	0.71	0.81	0.56	0.66	0.75	0.75	0.86
		PI	0.40	0.40	0.40	0.40	0.41	0.43	0.43	0.43	0.43	0.43	0.45	0.45	0.45	0.45	0.46	0.48	0.48	0.48	0.48	0.48
	50°F(10.0°C)	TC	10636	10650	10662	10662	10677	11277	11291	11302	11304	11317	11951	11966	11980	11982	11995	12671	12685	12699	12701	12716
		S/T	0.48	0.56	0.63	0.63	0.72	0.50	0.59	0.67	0.67	0.77	0.53	0.63	0.71	0.71	0.81	0.57	0.67	0.76	0.76	0.86
		PI	0.42	0.42	0.42	0.42	0.42	0.44	0.44	0.44	0.44	0.44	0.47	0.47	0.47	0.47	0.47	0.50	0.50	0.50	0.50	0.50
	59°F(15.0°C)	TC	10772	10786	10798	10798	10813	11421	11434	11446	11448	11462	12103	12119	12132	12135	12148	12832	12846	12860	12862	12878
		S/T	0.48	0.56	0.64	0.64	0.73	0.51	0.60	0.68	0.68	0.77	0.54	0.63	0.72	0.72	0.82	0.57	0.67	0.76	0.76	0.87
		PI	0.46	0.46	0.46	0.46	0.46	0.49	0.49	0.49	0.49	0.49	0.52	0.52	0.52	0.52	0.52	0.55	0.55	0.55	0.55	0.55
	68°F(20.0°C)	TC	10907	10922	10934	10934	10949	11565	11578	11590	11592	11606	12256	12271	12285	12287	12301	12994	13008	13022	13024	13041
		S/T	0.49	0.58	0.65	0.66	0.75	0.52	0.61	0.69	0.69	0.79	0.55	0.65	0.74	0.74	0.84	0.59	0.69	0.78	0.78	0.89
		PI	0.50	0.50	0.51	0.51	0.51	0.53	0.53	0.54	0.54	0.54	0.57	0.57	0.57	0.57	0.57	0.60	0.60	0.60	0.60	0.60
	77°F(25.0°C)	TC	11043	11058	11070	11070	11085	11708	11722	11734	11736	11750	12408	12424	12438	12440	12454	13155	13170	13184	13186	13203
		S/T	0.50	0.58	0.66	0.66	0.76	0.53	0.62	0.70	0.70	0.80	0.56	0.66	0.75	0.75	0.85	0.59	0.70	0.79	0.79	0.90
		PI	0.55	0.55	0.55	0.55	0.55	0.58	0.58	0.58	0.58	0.58	0.61	0.62	0.62	0.62	0.62	0.65	0.65	0.65	0.65	0.65
	82°F(27.8°C)	TC	10985	11000	11011	11012	11027	11647	11661	11672	11674	11688	12343	12359	12372	12375	12389	13086	13101	13115	13117	13133
		S/T	0.50	0.59	0.67	0.67	0.77	0.53	0.63	0.71	0.71	0.81	0.57	0.66	0.76	0.76	0.86	0.60	0.70	0.80	0.80	0.91
		PI	0.60	0.60	0.60	0.60	0.60	0.64	0.64	0.64	0.64	0.64	0.68	0.68	0.68	0.68	0.68	0.72	0.72	0.72	0.72	0.72
	86°F(30.0°C)	TC	10770	10785	10796	10797	10811	11419	11433	11444	11446	11460	12101	12117	12131	12133	12146	12831	12844	12858	12860	12876
		S/T	0.51	0.60	0.68	0.68	0.78	0.54	0.63	0.72	0.72	0.82	0.57	0.67	0.76	0.76	0.87	0.61	0.71	0.81	0.81	0.92
		PI	0.68	0.68	0.69	0.69	0.69	0.72	0.73	0.73	0.73	0.73	0.77	0.77	0.77	0.77	0.77	0.81	0.82	0.82	0.82	0.82
	95°F(35.0°C)	TC	10287	10301	10312	10312	10326	10907	10920	10931	10933	10946	11559	11574	11586	11589	11602	12255	12268	12282	12284	12299
		S/T	0.51	0.60	0.68	0.68	0.78	0.54	0.63	0.72	0.72	0.82	0.57	0.67	0.76	0.76	0.87	0.61	0.71	0.81	0.81	0.92
		PI	0.87	0.87	0.87	0.87	0.87	0.92	0.92	0.92	0.92	0.92	0.98	0.98	0.98	0.98	0.98	1.04	1.04	1.04	1.04	1.04
	104°F(40.0°C)	TC	9341	9353	9363	9364	9376	9903	9915	9925	9927	9939	10495	10509	10521	10522	10534	11128	11140	11152	11153	11167
		S/T	0.52	0.61	0.70	0.70	0.80	0.55	0.65	0.74	0.74	0.84	0.59	0.69	0.78	0.78	0.89	0.62	0.73	0.83	0.83	0.95
		PI	0.90	0.90	0.90	0.90	0.90	0.95	0.95	0.95	0.95	0.96	1.01	1.01	1.01	1.01	1.01	1.07	1.07	1.07	1.07	1.07

Manufacturer reserves the right to change, at any time, specifications and designs without notice and without obligations.

Table 6: Cooling Performance 115V, 12K (Continued)

AIRFLOW (CFM)	OUTDOOR DB °F (°C)	ID WB°F (°C)	60.8°F(16.0°C)					64.4°F(18.0°C)					67°F(19.4°C)					71.6°F(22.0°C)				
		ID DB°F (°C)	73.4°F (23.0°C)	77.0°F (25.0°C)	80.0°F (26.7°C)	80.6°F (27.0°C)	84.2°F (29.0°C)	73.4°F (23.0°C)	77.0°F (25.0°C)	80.0°F 26.7°C)	80.6°F (27.0°C)	84.2°F (29.0°C)	73.4°F (23.0°C)	77.0°F (25.0°C)	80.0°F (26.7°C)	80.6°F (27.0°C)	84.2°F (29.0°C)	73.4°F (23.0°C)	77.0°F(25.0°C)	80.0°F (26.7°C)	80.6°F (27.0°C)	84.2°F (29.0°C)
253	110°F(43.0°C)	TC	8773	8785	8794	8794	8806	9301	9312	9322	9323	9335	9857	9870	9881	9883	9894	10451	10462	10474	10475	10488
		S/T	0.54	0.64	0.72	0.72	0.82	0.57	0.67	0.77	0.77	0.87	0.61	0.71	0.81	0.81	0.93	0.65	0.76	0.86	0.86	0.98
		PI	0.91	0.92	0.92	0.92	0.92	0.97	0.97	0.97	0.97	0.97	1.03	1.03	1.03	1.03	1.03	1.09	1.09	1.09	1.09	1.09
	115°F(46.0°C)	TC	6954	6963	6971	6971	6980	7373	7381	7389	7390	7399	7813	7823	7832	7834	7842	8284	8293	8302	8303	8314
		S/T	0.55	0.64	0.73	0.73	0.83	0.58	0.68	0.78	0.78	0.88	0.62	0.72	0.82	0.82	0.94	0.65	0.77	0.87	0.87	0.99
		PI	0.78	0.78	0.78	0.78	0.78	0.83	0.83	0.83	0.83	0.83	0.88	0.88	0.88	0.88	0.88	0.93	0.93	0.93	0.93	0.93
	122°F(50.0°C)	TC	4528	4534	4539	4539	4546	4801	4807	4812	4813	4818	5088	5095	5100	5101	5107	5395	5400	5406	5407	5414
		S/T	0.56	0.66	0.75	0.75	0.85	0.60	0.70	0.79	0.79	0.90	0.63	0.74	0.84	0.84	0.96	0.67	0.78	0.89	0.89	1.00
		PI	0.60	0.60	0.60	0.60	0.61	0.64	0.64	0.64	0.64	0.64	0.68	0.68	0.68	0.68	0.68	0.72	0.72	0.72	0.72	0.72
329	5°F(-15.0°C)	TC	10762	10777	10788	10789	10803	11411	11424	11436	11438	11451	12093	12108	12122	12124	12138	12821	12835	12849	12851	12867
		S/T	0.47	0.56	0.63	0.63	0.72	0.50	0.59	0.67	0.67	0.77	0.53	0.63	0.71	0.71	0.81	0.57	0.66	0.75	0.75	0.86
		PI	0.48	0.48	0.48	0.48	0.48	0.51	0.51	0.51	0.51	0.51	0.54	0.54	0.54	0.54	0.54	0.57	0.57	0.57	0.57	0.57
	14°F(-10.0°C)	TC	11631	11646	11659	11659	11675	12332	12346	12358	12361	12376	13068	13085	13100	13102	13117	13856	13871	13886	13888	13905
		S/T	0.48	0.56	0.63	0.63	0.72	0.50	0.59	0.67	0.67	0.77	0.53	0.63	0.71	0.71	0.81	0.57	0.67	0.76	0.76	0.86
		PI	0.47	0.47	0.47	0.47	0.47	0.50	0.50	0.50	0.50	0.50	0.53	0.53	0.53	0.53	0.53	0.56	0.56	0.56	0.56	0.56
	17°F(-8.3°C)	TC	11920	11936	11949	11950	11966	12639	12654	12666	12669	12684	13394	13411	13426	13429	13444	14201	14216	14232	14234	14252
		S/T	0.48	0.56	0.64	0.64	0.73	0.51	0.59	0.67	0.67	0.77	0.54	0.63	0.72	0.72	0.82	0.57	0.67	0.76	0.76	0.86
		PI	0.47	0.47	0.47	0.47	0.47	0.49	0.49	0.49	0.49	0.49	0.52	0.52	0.52	0.52	0.52	0.55	0.55	0.56	0.56	0.56
	23°F(-5.0°C)	TC	11618	11634	11646	11647	11663	12318	12333	12345	12348	12362	13054	13071	13086	13088	13103	13841	13856	13871	13873	13890
		S/T	0.48	0.56	0.64	0.64	0.73	0.51	0.60	0.68	0.68	0.77	0.54	0.63	0.72	0.72	0.82	0.57	0.67	0.76	0.76	0.87
		PI	0.51	0.51	0.51	0.51	0.51	0.54	0.54	0.54	0.54	0.55	0.58	0.58	0.58	0.58	0.58	0.61	0.61	0.61	0.61	0.61
	35°F(1.7°C)	TC	11014	11029	11041	11041	11056	11678	11692	11703	11705	11719	12375	12392	12405	12408	12421	13121	13135	13150	13152	13168
		S/T	0.48	0.57	0.64	0.64	0.73	0.51	0.60	0.68	0.68	0.78	0.54	0.64	0.72	0.72	0.82	0.57	0.67	0.77	0.77	0.87
		PI	0.61	0.61	0.61	0.61	0.61	0.64	0.64	0.64	0.64	0.65	0.68	0.68	0.68	0.68	0.68	0.72	0.72	0.72	0.72	0.73
	41°F(5.0°C)	TC	10924	10938	10950	10951	10965	11582	11596	11607	11609	11623	12274	12290	12304	12306	12320	13013	13028	13042	13044	13060
		S/T	0.48	0.57	0.64	0.64	0.73	0.51	0.60	0.68	0.68	0.78	0.54	0.64	0.72	0.72	0.83	0.58	0.68	0.77	0.77	0.87
		PI	0.51	0.51	0.51	0.51	0.51	0.54	0.54	0.54	0.54	0.54	0.57	0.57	0.57	0.57	0.57	0.61	0.61	0.61	0.61	0.61
	47°F(8.3°C)	TC	10833	10848	10860	10860	10875	11486	11500	11511	11513	11527	12172	12188	12202	12204	12218	12906	12920	12934	12936	12952
		S/T	0.48	0.57	0.65	0.65	0.74	0.51	0.60	0.68	0.68	0.78	0.54	0.64	0.73	0.73	0.83	0.58	0.68	0.77	0.77	0.88
		PI	0.41	0.41	0.41	0.41	0.41	0.44	0.44	0.44	0.44	0.44	0.46	0.46	0.47	0.47	0.47	0.49	0.49	0.49	0.49	0.49
	50°F(10.0°C)	TC	10880	10894	10906	10906	10921	11535	11549	11560	11563	11576	12224	12240	12254	12256	12270	12961	12975	12989	12991	13007
		S/T	0.49	0.57	0.65	0.65	0.74	0.52	0.61	0.69	0.69	0.78	0.55	0.64	0.73	0.73	0.83	0.58	0.68	0.77	0.77	0.88
		PI	0.43	0.43	0.43	0.43	0.43	0.45	0.45	0.45	0.45	0.45	0.48	0.48	0.48	0.48	0.48	0.51	0.51	0.51	0.51	0.51

Manufacturer reserves the right to change, at any time, specifications and designs without notice and without obligations.

Table 6: Cooling Performance 115V, 12K (Continued)

AIRFLOW (CFM)	OUTDOOR DB °F (°C)	ID WB°F (°C)	60.8°F(16.0°C)					64.4°F(18.0°C)					67°F(19.4°C)					71.6°F(22.0°C)				
		ID DB°F (°C)	73.4°F (23.0°C)	77.0°F (25.0°C)	80.0°F (26.7°C)	80.6°F (27.0°C)	84.2°F (29.0°C)	73.4°F (23.0°C)	77.0°F (25.0°C)	80.0°F 26.7°C)	80.6°F (27.0°C)	84.2°F (29.0°C)	73.4°F (23.0°C)	77.0°F (25.0°C)	80.0°F (26.7°C)	80.6°F (27.0°C)	84.2°F (29.0°C)	73.4°F (23.0°C)	77.0°F(25.0°C)	80.0°F (26.7°C)	80.6°F (27.0°C)	84.2°F (29.0°C)
329	59°F(15.0°C)	TC	11018	11033	11045	11045	11060	11682	11696	11708	11710	11724	12380	12396	12410	12412	12426	13126	13140	13155	13157	13173
		S/T	0.49	0.57	0.65	0.65	0.74	0.52	0.61	0.69	0.69	0.79	0.55	0.65	0.73	0.73	0.84	0.58	0.68	0.78	0.78	0.89
		PI	0.47	0.47	0.47	0.47	0.47	0.50	0.50	0.50	0.50	0.50	0.53	0.53	0.53	0.53	0.53	0.56	0.56	0.56	0.56	0.56
	68°F(20.0°C)	TC	11157	11172	11184	11184	11200	11829	11843	11855	11857	11871	12536	12552	12566	12569	12583	13291	13306	13320	13322	13339
		S/T	0.50	0.59	0.67	0.67	0.76	0.53	0.62	0.71	0.71	0.81	0.56	0.66	0.75	0.75	0.86	0.60	0.70	0.80	0.80	0.91
		PI	0.52	0.52	0.52	0.52	0.52	0.55	0.55	0.55	0.55	0.55	0.58	0.58	0.58	0.58	0.58	0.61	0.61	0.62	0.62	0.62
	77°F(25.0°C)	TC	11296	11311	11323	11323	11339	11976	11991	12002	12005	12019	12692	12708	12722	12725	12739	13457	13471	13486	13488	13505
		S/T	0.51	0.60	0.68	0.68	0.77	0.54	0.63	0.72	0.72	0.82	0.57	0.67	0.76	0.76	0.87	0.61	0.71	0.81	0.81	0.92
		PI	0.56	0.56	0.56	0.56	0.56	0.59	0.59	0.59	0.59	0.60	0.63	0.63	0.63	0.63	0.63	0.67	0.67	0.67	0.67	0.67
	82°F(27.8°C)	TC	11236	11251	11263	11264	11279	11913	11927	11939	11942	11956	12625	12642	12656	12658	12672	13386	13400	13415	13417	13434
		S/T	0.52	0.60	0.69	0.69	0.78	0.55	0.64	0.73	0.73	0.83	0.58	0.68	0.77	0.77	0.88	0.61	0.72	0.82	0.82	0.93
		PI	0.62	0.62	0.62	0.62	0.62	0.65	0.65	0.65	0.65	0.65	0.69	0.69	0.69	0.69	0.69	0.73	0.73	0.73	0.73	0.74
	86°F(30.0°C)	TC	11017	11031	11043	11044	11059	11680	11694	11706	11708	11722	12378	12394	12408	12411	12424	13124	13138	13153	13155	13171
		S/T	0.52	0.61	0.70	0.70	0.79	0.55	0.65	0.74	0.74	0.84	0.59	0.69	0.78	0.78	0.89	0.62	0.73	0.83	0.83	0.95
		PI	0.70	0.70	0.70	0.70	0.70	0.74	0.74	0.74	0.74	0.74	0.79	0.79	0.79	0.79	0.79	0.83	0.83	0.83	0.83	0.84
	95°F(35.0°C)	TC	10522	10537	10548	10548	10563	11157	11170	11181	11183	11196	11823	11838	11852	11854	11867	12535	12549	12563	12565	12580
		S/T	0.52	0.61	0.70	0.70	0.79	0.55	0.65	0.74	0.74	0.84	0.59	0.69	0.78	0.78	0.89	0.62	0.73	0.83	0.83	0.95
		PI	0.89	0.89	0.89	0.89	0.89	0.94	0.94	0.94	0.94	0.95	1.00	1.00	1.00	1.00	1.00	1.06	1.06	1.06	1.06	1.06
	104°F(40.0°C)	TC	9554	9567	9577	9578	9591	10130	10142	10152	10154	10166	10735	10749	10761	10763	10775	11382	11395	11407	11409	11423
		S/T	0.54	0.63	0.71	0.71	0.81	0.57	0.67	0.76	0.76	0.86	0.60	0.71	0.80	0.80	0.91	0.64	0.75	0.85	0.85	0.97
		PI	0.92	0.92	0.92	0.92	0.92	0.97	0.97	0.98	0.98	0.98	1.03	1.03	1.03	1.03	1.04	1.09	1.10	1.10	1.10	1.10
	110°F(43.0°C)	TC	8974	8986	8995	8996	9008	9514	9526	9535	9537	9548	10083	10096	10107	10109	10120	10690	10702	10713	10715	10728
		S/T	0.55	0.65	0.74	0.74	0.84	0.59	0.69	0.78	0.78	0.89	0.62	0.73	0.83	0.83	0.95	0.66	0.78	0.88	0.88	1.00
		PI	0.94	0.94	0.94	0.94	0.94	0.99	0.99	0.99	0.99	1.00	1.05	1.05	1.05	1.05	1.06	1.11	1.12	1.12	1.12	1.12
	115°F(46.0°C)	TC	7113	7122	7130	7130	7140	7541	7550	7558	7559	7568	7992	8002	8011	8013	8022	8474	8483	8492	8493	8504
		S/T	0.56	0.66	0.75	0.75	0.85	0.59	0.70	0.79	0.79	0.90	0.63	0.74	0.84	0.84	0.96	0.67	0.78	0.89	0.89	1.00
		PI	0.80	0.80	0.80	0.80	0.80	0.85	0.85	0.85	0.85	0.85	0.90	0.90	0.90	0.90	0.90	0.95	0.95	0.95	0.95	0.96
	122°F(50.0°C)	TC	4632	4638	4643	4643	4650	4911	4917	4922	4923	4928	5204	5211	5217	5218	5224	5518	5524	5530	5531	5538
		S/T	0.57	0.67	0.77	0.77	0.87	0.61	0.71	0.81	0.81	0.93	0.65	0.76	0.86	0.86	0.98	0.68	0.80	0.91	0.91	1.00
		PI	0.62	0.62	0.62	0.62	0.62	0.65	0.66	0.66	0.66	0.66	0.69	0.69	0.70	0.70	0.70	0.74	0.74	0.74	0.74	0.74
347	5°F(-15.0°C)	TC	11009	11023	11035	11036	11051	11672	11686	11697	11700	11714	12369	12385	12399	12402	12415	13115	13129	13143	13145	13162
		S/T	0.49	0.57	0.65	0.65	0.74	0.51	0.60	0.69	0.69	0.78	0.55	0.64	0.73	0.73	0.83	0.58	0.68	0.77	0.77	0.88
		PI	0.49	0.49	0.49	0.49	0.49	0.52	0.52	0.52	0.52	0.52	0.55	0.55	0.55	0.55	0.55	0.58	0.58	0.58	0.58	0.58

Manufacturer reserves the right to change, at any time, specifications and designs without notice and without obligations.

Table 6: Cooling Performance 115V, 12K (Continued)

AIRFLOW (CFM)	OUTDOOR DB °F (℃)	ID WB°F (℃)	60.8°F(16.0℃)					64.4°F(18.0℃)					67°F(19.4℃)					71.6°F(22.0℃)				
		ID DB°F (℃)	73.4°F (23.0℃)	77.0°F (25.0℃)	80.0°F (26.7℃)	80.6°F (27.0℃)	84.2°F (29.0℃)	73.4°F (23.0℃)	77.0°F (25.0℃)	80.0°F 26.7℃)	80.6°F (27.0℃)	84.2°F (29.0℃)	73.4°F (23.0℃)	77.0°F (25.0℃)	80.0°F (26.7℃)	80.6°F (27.0℃)	84.2°F (29.0℃)	73.4°F (23.0℃)	77.0°F(25.0℃)	80.0°F (26.7℃)	80.6°F (27.0℃)	84.2°F (29.0℃)
347	14°F(-10.0℃)	TC	11897	11913	11926	11926	11942	12614	12629	12641	12644	12659	13367	13385	13400	13402	13417	14173	14188	14204	14206	14224
		S/T	0.49	0.57	0.65	0.65	0.74	0.52	0.61	0.69	0.69	0.78	0.55	0.64	0.73	0.73	0.83	0.58	0.68	0.77	0.77	0.88
		PI	0.48	0.48	0.48	0.48	0.48	0.51	0.51	0.51	0.51	0.51	0.54	0.54	0.54	0.54	0.54	0.57	0.57	0.57	0.57	0.57
	17°F(-8.3℃)	TC	12193	12209	12223	12223	12240	12928	12943	12956	12959	12974	13700	13718	13733	13736	13751	14526	14541	14557	14560	14578
		S/T	0.49	0.57	0.65	0.65	0.74	0.52	0.61	0.69	0.69	0.79	0.55	0.64	0.73	0.73	0.83	0.58	0.68	0.78	0.78	0.88
		PI	0.48	0.48	0.48	0.48	0.48	0.50	0.51	0.51	0.51	0.51	0.53	0.54	0.54	0.54	0.54	0.57	0.57	0.57	0.57	0.57
	23°F(-5.0℃)	TC	11884	11900	11913	11913	11929	12600	12615	12628	12630	12645	13353	13370	13385	13388	13403	14158	14173	14188	14191	14208
		S/T	0.49	0.58	0.65	0.65	0.75	0.52	0.61	0.69	0.69	0.79	0.55	0.65	0.74	0.74	0.84	0.58	0.69	0.78	0.78	0.89
		PI	0.52	0.52	0.53	0.53	0.53	0.56	0.56	0.56	0.56	0.56	0.59	0.59	0.59	0.59	0.59	0.62	0.63	0.63	0.63	0.63
	35°F(1.7℃)	TC	11266	11281	11293	11294	11309	11945	11959	11971	11973	11988	12659	12675	12689	12692	12706	13421	13436	13451	13453	13469
		S/T	0.49	0.58	0.66	0.66	0.75	0.52	0.61	0.70	0.70	0.79	0.55	0.65	0.74	0.74	0.84	0.59	0.69	0.78	0.78	0.89
		PI	0.62	0.62	0.62	0.62	0.62	0.66	0.66	0.66	0.66	0.66	0.70	0.70	0.70	0.70	0.70	0.74	0.74	0.74	0.74	0.74
	41°F(5.0℃)	TC	11174	11189	11201	11201	11216	11847	11861	11873	11875	11889	12555	12571	12585	12588	12602	13311	13326	13340	13342	13359
		S/T	0.49	0.58	0.66	0.66	0.75	0.52	0.61	0.70	0.70	0.80	0.56	0.65	0.74	0.74	0.84	0.59	0.69	0.78	0.78	0.89
		PI	0.52	0.52	0.52	0.52	0.52	0.55	0.55	0.55	0.55	0.55	0.59	0.59	0.59	0.59	0.59	0.62	0.62	0.62	0.62	0.62
	47°F(8.3℃)	TC	11081	11096	11108	11109	11124	11749	11763	11775	11777	11791	12451	12467	12481	12483	12497	13201	13216	13230	13232	13248
		S/T	0.50	0.58	0.66	0.66	0.75	0.53	0.62	0.70	0.70	0.80	0.56	0.65	0.74	0.74	0.85	0.59	0.69	0.79	0.79	0.90
		PI	0.42	0.42	0.42	0.42	0.42	0.45	0.45	0.45	0.45	0.45	0.47	0.48	0.48	0.48	0.48	0.50	0.50	0.50	0.50	0.50
	50°F(10.0℃)	TC	11129	11144	11156	11156	11171	11799	11813	11825	11827	11841	12504	12520	12534	12537	12551	13258	13272	13286	13288	13305
		S/T	0.50	0.58	0.66	0.66	0.76	0.53	0.62	0.70	0.70	0.80	0.56	0.66	0.75	0.75	0.85	0.59	0.70	0.79	0.79	0.90
		PI	0.44	0.44	0.44	0.44	0.44	0.46	0.46	0.46	0.46	0.47	0.49	0.49	0.49	0.49	0.49	0.52	0.52	0.52	0.52	0.52
	59°F(15.0℃)	TC	11270	11286	11298	11298	11313	11950	11964	11976	11978	11992	12664	12680	12694	12696	12711	13427	13441	13456	13458	13475
		S/T	0.50	0.59	0.67	0.67	0.76	0.53	0.62	0.71	0.71	0.81	0.56	0.66	0.75	0.75	0.86	0.60	0.70	0.80	0.80	0.91
		PI	0.48	0.48	0.48	0.48	0.48	0.51	0.51	0.51	0.51	0.51	0.54	0.54	0.54	0.54	0.54	0.57	0.58	0.58	0.58	0.58
	68°F(20.0℃)	TC	11412	11428	11440	11440	11456	12100	12114	12126	12129	12143	12823	12840	12854	12856	12871	13596	13610	13625	13627	13644
		S/T	0.51	0.60	0.69	0.69	0.78	0.54	0.64	0.73	0.73	0.83	0.58	0.68	0.77	0.77	0.88	0.61	0.72	0.82	0.82	0.93
		PI	0.53	0.53	0.53	0.53	0.53	0.56	0.56	0.56	0.56	0.56	0.59	0.59	0.59	0.59	0.59	0.63	0.63	0.63	0.63	0.63
	77°F(25.0℃)	TC	11554	11570	11582	11583	11598	12250	12265	12277	12279	12294	12982	12999	13014	13016	13031	13764	13779	13794	13797	13814
		S/T	0.52	0.61	0.69	0.69	0.79	0.55	0.65	0.74	0.74	0.84	0.59	0.69	0.78	0.78	0.89	0.62	0.73	0.83	0.83	0.94
		PI	0.57	0.57	0.57	0.57	0.57	0.61	0.61	0.61	0.61	0.61	0.64	0.64	0.64	0.64	0.65	0.68	0.68	0.68	0.68	0.68
	82°F(27.8℃)	TC	11493	11509	11521	11522	11537	12186	12200	12212	12215	12229	12914	12931	12945	12948	12962	13692	13707	13722	13724	13741
		S/T	0.53	0.62	0.70	0.70	0.80	0.56	0.66	0.75	0.75	0.85	0.59	0.70	0.79	0.79	0.90	0.63	0.74	0.84	0.84	0.95
		PI	0.63	0.63	0.63	0.63	0.63	0.67	0.67	0.67	0.67	0.67	0.71	0.71	0.71	0.71	0.71	0.75	0.75	0.75	0.75	0.75

Manufacturer reserves the right to change, at any time, specifications and designs without notice and without obligations.

Table 6: Cooling Performance 115V, 12K (Continued)

AIRFLOW (CFM)	OUTDOOR DB °F (℃)	ID WB°F (℃)	60.8°F(16.0℃)					64.4°F(18.0℃)					67°F(19.4℃)					71.6°F(22.0℃)				
		ID DB°F (℃)	73.4°F (23.0℃)	77.0°F (25.0℃)	80.0°F (26.7℃)	80.6°F (27.0℃)	84.2°F (29.0℃)	73.4°F (23.0℃)	77.0°F (25.0℃)	80.0°F 26.7℃)	80.6°F (27.0℃)	84.2°F (29.0℃)	73.4°F (23.0℃)	77.0°F (25.0℃)	80.0°F (26.7℃)	80.6°F (27.0℃)	84.2°F (29.0℃)	73.4°F (23.0℃)	77.0°F(25.0℃)	80.0°F (26.7℃)	80.6°F (27.0℃)	84.2°F (29.0℃)
347	86°F(30.0℃)	TC	11269	11284	11296	11297	11312	11948	11962	11974	11976	11990	12662	12678	12692	12695	12709	13424	13439	13454	13456	13473
		S/T	0.53	0.63	0.71	0.71	0.81	0.57	0.66	0.75	0.75	0.86	0.60	0.70	0.80	0.80	0.91	0.64	0.75	0.85	0.85	0.97
		PI	0.72	0.72	0.72	0.72	0.72	0.76	0.76	0.76	0.76	0.76	0.80	0.80	0.81	0.81	0.81	0.85	0.85	0.85	0.85	0.86
	95°F(35.0℃)	TC	10763	10778	10789	10790	10804	11412	11425	11437	11439	11452	12094	12109	12123	12125	12139	12822	12836	12850	12852	12868
		S/T	0.53	0.63	0.71	0.71	0.81	0.57	0.66	0.75	0.75	0.86	0.60	0.70	0.80	0.80	0.91	0.64	0.75	0.85	0.85	0.97
		PI	0.91	0.91	0.91	0.91	0.91	0.96	0.97	0.97	0.97	0.97	1.02	1.02	1.02	1.02	1.03	1.08	1.08	1.09	1.09	1.09
	104°F(40.0℃)	TC	9773	9786	9797	9797	9810	10362	10374	10384	10387	10399	10981	10995	11008	11010	11022	11643	11655	11668	11670	11684
		S/T	0.55	0.64	0.73	0.73	0.83	0.58	0.68	0.77	0.77	0.88	0.62	0.72	0.82	0.82	0.93	0.65	0.76	0.87	0.87	0.99
		PI	0.94	0.94	0.94	0.94	0.94	1.00	1.00	1.00	1.00	1.00	1.06	1.06	1.06	1.06	1.06	1.12	1.12	1.12	1.12	1.12
	110°F(43.0℃)	TC	9179	9191	9201	9202	9214	9732	9744	9753	9755	9767	10313	10327	10338	10340	10352	10935	10947	10959	10960	10974
		S/T	0.57	0.67	0.76	0.76	0.86	0.60	0.71	0.80	0.80	0.91	0.64	0.75	0.85	0.85	0.97	0.68	0.79	0.90	0.90	1.00
		PI	0.96	0.96	0.96	0.96	0.96	1.02	1.02	1.02	1.02	1.02	1.08	1.08	1.08	1.08	1.08	1.14	1.14	1.14	1.14	1.14
	115°F(46.0℃)	TC	7276	7285	7293	7294	7303	7714	7723	7731	7732	7742	8175	8186	8195	8196	8205	8667	8677	8686	8688	8698
		S/T	0.57	0.67	0.77	0.77	0.87	0.61	0.71	0.81	0.81	0.92	0.65	0.76	0.86	0.86	0.98	0.68	0.80	0.91	0.91	1.00
		PI	0.82	0.82	0.82	0.82	0.82	0.87	0.87	0.87	0.87	0.87	0.92	0.92	0.92	0.92	0.92	0.97	0.98	0.98	0.98	0.98
	122°F(50.0℃)	TC	4738	4744	4749	4750	4756	5023	5029	5034	5035	5041	5324	5330	5336	5337	5343	5644	5650	5657	5657	5664
		S/T	0.59	0.69	0.78	0.78	0.89	0.62	0.73	0.83	0.83	0.95	0.66	0.77	0.88	0.88	1.00	0.70	0.82	0.93	0.93	1.00
		PI	0.63	0.63	0.63	0.63	0.63	0.67	0.67	0.67	0.67	0.67	0.71	0.71	0.71	0.71	0.71	0.75	0.75	0.75	0.75	0.75

LEGEND

TC: Total Cooling Capacity (BTU/hr)
S/T: Sensible Cooling Capacity Ratio
PI: Power Input (kW)

Manufacturer reserves the right to change, at any time, specifications and designs without notice and without obligations.

Table 7: Cooling Performance 9K

AIRFLOW (CFM)	OUTDOOR DB°F (℃)	ID WB°F (℃)	60.8°F(16.0℃)					64.4°F(18.0℃)					67°F(19.4℃)					71.6°F(22.0℃)				
		ID DB°F (℃)	73.4°F (23.0℃)	77.0°F (25.0℃)	80.0°F (26.7℃)	80.6°F (27.0℃)	84.2°F (29.0℃)	73.4°F (23.0℃)	77.0°F (25.0℃)	80.0°F 26.7℃)	80.6°F (27.0℃)	84.2°F (29.0℃)	73.4°F (23.0℃)	77.0°F (25.0℃)	80.0°F (26.7℃)	80.6°F (27.0℃)	84.2°F (29.0℃)	73.4°F (23.0℃)	77.0°F(25.0℃)	80.0°F (26.7℃)	80.6°F (27.0℃)	84.2°F (29.0℃)
141	5°F(-15.0℃)	TC	6308	6316	6323	6323	6332	6688	6696	6702	6704	6712	7087	7096	7104	7106	7114	7514	7522	7531	7532	7541
		S/T	0.26	0.31	0.35	0.35	0.40	0.28	0.33	0.37	0.37	0.43	0.30	0.35	0.40	0.40	0.45	0.31	0.37	0.42	0.42	0.48
		PI	0.31	0.31	0.31	0.31	0.31	0.33	0.33	0.33	0.33	0.33	0.35	0.35	0.35	0.35	0.35	0.37	0.37	0.37	0.37	0.37
	14°F(-10.0℃)	TC	6259	6268	6275	6275	6283	6637	6644	6651	6652	6660	7033	7042	7050	7051	7059	7457	7465	7473	7474	7484
		S/T	0.26	0.31	0.35	0.35	0.40	0.28	0.33	0.37	0.37	0.43	0.30	0.35	0.40	0.40	0.45	0.32	0.37	0.42	0.42	0.48
		PI	0.32	0.32	0.32	0.32	0.32	0.34	0.34	0.34	0.34	0.34	0.36	0.36	0.36	0.36	0.36	0.38	0.38	0.38	0.38	0.38
	17°F(-8.3℃)	TC	6243	6252	6258	6259	6267	6620	6627	6634	6635	6643	7015	7024	7032	7033	7041	7438	7446	7454	7455	7464
		S/T	0.27	0.31	0.35	0.35	0.40	0.28	0.33	0.38	0.38	0.43	0.30	0.35	0.40	0.40	0.45	0.32	0.37	0.42	0.42	0.48
		PI	0.32	0.32	0.32	0.32	0.32	0.34	0.34	0.34	0.34	0.34	0.36	0.36	0.36	0.36	0.36	0.38	0.38	0.38	0.38	0.38
	23°F(-5.0℃)	TC	6163	6171	6178	6178	6186	6534	6542	6548	6550	6557	6924	6933	6941	6942	6950	7342	7350	7358	7359	7368
		S/T	0.27	0.31	0.36	0.36	0.41	0.28	0.33	0.38	0.38	0.43	0.30	0.35	0.40	0.40	0.46	0.32	0.37	0.42	0.42	0.48
		PI	0.33	0.33	0.33	0.33	0.33	0.35	0.35	0.35	0.35	0.35	0.37	0.37	0.37	0.37	0.37	0.39	0.39	0.39	0.39	0.39
	35°F(1.7℃)	TC	6001	6009	6016	6016	6024	6363	6370	6377	6378	6386	6743	6752	6759	6761	6768	7149	7157	7165	7166	7175
		S/T	0.27	0.31	0.36	0.36	0.41	0.28	0.33	0.38	0.38	0.43	0.30	0.35	0.40	0.40	0.46	0.32	0.37	0.43	0.43	0.49
		PI	0.35	0.35	0.35	0.35	0.35	0.37	0.37	0.37	0.37	0.37	0.39	0.39	0.39	0.39	0.39	0.41	0.42	0.42	0.42	0.42
	41°F(5.0℃)	TC	5791	5799	5805	5805	5813	6140	6147	6153	6154	6162	6507	6515	6522	6524	6531	6899	6906	6914	6915	6923
		S/T	0.27	0.32	0.36	0.36	0.41	0.28	0.33	0.38	0.38	0.43	0.30	0.35	0.40	0.40	0.46	0.32	0.38	0.43	0.43	0.49
		PI	0.29	0.29	0.29	0.29	0.29	0.30	0.30	0.30	0.30	0.30	0.32	0.32	0.32	0.32	0.32	0.34	0.34	0.34	0.34	0.34
	47°F(8.3℃)	TC	5581	5588	5594	5594	5602	5917	5924	5930	5931	5938	6270	6279	6286	6287	6294	6648	6655	6663	6664	6672
		S/T	0.27	0.32	0.36	0.36	0.41	0.29	0.34	0.38	0.38	0.43	0.30	0.36	0.40	0.40	0.46	0.32	0.38	0.43	0.43	0.49
		PI	0.22	0.22	0.22	0.22	0.22	0.24	0.24	0.24	0.24	0.24	0.25	0.25	0.25	0.25	0.25	0.27	0.27	0.27	0.27	0.27
	50°F(10.0℃)	TC	5610	5617	5623	5624	5631	5948	5955	5961	5962	5969	6303	6311	6318	6319	6327	6683	6690	6697	6698	6707
		S/T	0.27	0.32	0.36	0.36	0.41	0.29	0.34	0.38	0.38	0.44	0.30	0.36	0.41	0.41	0.46	0.32	0.38	0.43	0.43	0.49
		PI	0.23	0.23	0.23	0.23	0.23	0.25	0.25	0.25	0.25	0.25	0.26	0.26	0.26	0.26	0.26	0.28	0.28	0.28	0.28	0.28
	59°F(15.0℃)	TC	5697	5704	5711	5711	5719	6040	6047	6053	6054	6062	6401	6409	6416	6418	6425	6787	6794	6801	6802	6811
		S/T	0.27	0.32	0.36	0.36	0.41	0.29	0.34	0.38	0.38	0.44	0.31	0.36	0.41	0.41	0.46	0.32	0.38	0.43	0.43	0.49
		PI	0.26	0.26	0.26	0.26	0.26	0.27	0.27	0.28	0.28	0.28	0.29	0.29	0.29	0.29	0.29	0.31	0.31	0.31	0.31	0.31
	68°F(20.0℃)	TC	5784	5792	5798	5798	5806	6133	6140	6146	6147	6154	6499	6507	6515	6516	6523	6890	6898	6905	6907	6915
		S/T	0.28	0.33	0.37	0.37	0.42	0.30	0.35	0.40	0.40	0.45	0.31	0.37	0.42	0.42	0.48	0.33	0.39	0.44	0.44	0.51
		PI	0.29	0.29	0.29	0.29	0.29	0.30	0.30	0.30	0.30	0.30	0.32	0.32	0.32	0.32	0.32	0.34	0.34	0.34	0.34	0.34
	77°F(25.0℃)	TC	5871	5879	5885	5886	5894	6225	6232	6238	6240	6247	6597	6605	6613	6614	6621	6994	7002	7009	7011	7019
		S/T	0.28	0.33	0.38	0.38	0.43	0.30	0.35	0.40	0.40	0.46	0.32	0.37	0.42	0.42	0.48	0.34	0.40	0.45	0.45	0.51
		PI	0.31	0.31	0.31	0.31	0.31	0.33	0.33	0.33	0.33	0.33	0.35	0.35	0.35	0.35	0.35	0.37	0.37	0.37	0.37	0.38

Manufacturer reserves the right to change, at any time, specifications and designs without notice and without obligations.

Table 7: Cooling Performance 9K (Continued)

AIRFLOW (CFM)	OUTDOOR DB°F (°C)	ID WB°F (°C)	60.8°F(16.0°C)					64.4°F(18.0°C)					67°F(19.4°C)					71.6°F(22.0°C)				
		ID DB°F (°C)	73.4°F (23.0°C)	77.0°F (25.0°C)	80.0°F (26.7°C)	80.6°F (27.0°C)	84.2°F (29.0°C)	73.4°F (23.0°C)	77.0°F (25.0°C)	80.0°F 26.7°C)	80.6°F (27.0°C)	84.2°F (29.0°C)	73.4°F (23.0°C)	77.0°F (25.0°C)	80.0°F (26.7°C)	80.6°F (27.0°C)	84.2°F (29.0°C)	73.4°F (23.0°C)	77.0°F(25.0°C)	80.0°F (26.7°C)	80.6°F (27.0°C)	84.2°F (29.0°C)
141	82°F(27.8°C)	TC	5836	5844	5850	5850	5858	6188	6195	6201	6202	6210	6557	6566	6573	6574	6582	6952	6960	6967	6969	6977
		S/T	0.29	0.34	0.38	0.38	0.44	0.30	0.36	0.41	0.41	0.46	0.32	0.38	0.43	0.43	0.49	0.34	0.40	0.46	0.46	0.52
		PI	0.35	0.35	0.35	0.35	0.35	0.37	0.37	0.37	0.37	0.37	0.39	0.39	0.39	0.39	0.39	0.41	0.41	0.41	0.41	0.41
	86°F(30.0°C)	TC	5702	5710	5716	5716	5724	6046	6053	6059	6060	6067	6407	6415	6423	6424	6431	6793	6801	6808	6809	6817
		S/T	0.29	0.34	0.39	0.39	0.44	0.31	0.36	0.41	0.41	0.47	0.33	0.38	0.44	0.44	0.50	0.35	0.41	0.46	0.46	0.53
		PI	0.39	0.39	0.39	0.39	0.39	0.42	0.42	0.42	0.42	0.42	0.44	0.44	0.44	0.44	0.44	0.47	0.47	0.47	0.47	0.47
	95°F(35.0°C)	TC	5402	5409	5415	5415	5422	5727	5734	5740	5741	5747	6069	6077	6084	6085	6092	6435	6442	6449	6450	6458
		S/T	0.29	0.34	0.39	0.39	0.44	0.31	0.36	0.41	0.41	0.47	0.33	0.38	0.44	0.44	0.50	0.35	0.41	0.46	0.46	0.53
		PI	0.50	0.50	0.50	0.50	0.50	0.53	0.53	0.53	0.53	0.53	0.56	0.56	0.56	0.56	0.56	0.59	0.59	0.59	0.59	0.59
	104°F(40.0°C)	TC	4524	4530	4535	4536	4542	4797	4803	4807	4808	4814	5084	5090	5096	5097	5103	5390	5396	5402	5402	5409
		S/T	0.30	0.35	0.40	0.40	0.45	0.32	0.37	0.42	0.42	0.48	0.33	0.39	0.45	0.45	0.51	0.35	0.42	0.47	0.47	0.54
		PI	0.45	0.45	0.45	0.45	0.45	0.48	0.48	0.48	0.48	0.48	0.51	0.51	0.51	0.51	0.51	0.54	0.54	0.54	0.54	0.54
	110°F(43.0°C)	TC	3998	4003	4008	4008	4013	4239	4244	4248	4249	4254	4492	4498	4503	4504	4509	4763	4768	4773	4774	4780
		S/T	0.31	0.36	0.41	0.41	0.47	0.33	0.38	0.44	0.44	0.50	0.35	0.41	0.46	0.46	0.53	0.37	0.43	0.49	0.49	0.56
		PI	0.42	0.42	0.42	0.42	0.43	0.45	0.45	0.45	0.45	0.45	0.48	0.48	0.48	0.48	0.48	0.50	0.50	0.51	0.51	0.51
	115°F(46.0°C)	TC	3618	3623	3627	3627	3632	3836	3841	3845	3845	3850	4065	4071	4075	4076	4081	4310	4315	4320	4320	4326
		S/T	0.31	0.37	0.42	0.42	0.47	0.33	0.39	0.44	0.44	0.50	0.35	0.41	0.47	0.47	0.53	0.37	0.44	0.50	0.50	0.57
		PI	0.43	0.43	0.43	0.43	0.43	0.45	0.46	0.46	0.46	0.46	0.48	0.48	0.48	0.48	0.48	0.51	0.51	0.51	0.51	0.51
	122°F(50.0°C)	TC	3112	3116	3119	3119	3124	3299	3303	3306	3307	3311	3496	3501	3505	3506	3509	3707	3711	3715	3716	3720
		S/T	0.32	0.37	0.43	0.43	0.49	0.34	0.40	0.45	0.45	0.51	0.36	0.42	0.48	0.48	0.55	0.38	0.45	0.51	0.51	0.58
		PI	0.44	0.44	0.44	0.44	0.44	0.46	0.46	0.46	0.46	0.46	0.49	0.49	0.49	0.49	0.49	0.52	0.52	0.52	0.52	0.52
176	5°F(-15.0°C)	TC	7728	7738	7746	7747	7757	8193	8203	8211	8213	8223	8683	8694	8704	8706	8715	9206	9216	9226	9228	9239
		S/T	0.32	0.38	0.43	0.43	0.49	0.34	0.40	0.46	0.46	0.52	0.36	0.43	0.48	0.48	0.55	0.39	0.45	0.51	0.51	0.59
		PI	0.38	0.38	0.38	0.38	0.38	0.40	0.40	0.40	0.40	0.40	0.43	0.43	0.43	0.43	0.43	0.45	0.45	0.45	0.45	0.45
	14°F(-10.0°C)	TC	7669	7679	7687	7688	7698	8131	8140	8149	8150	8160	8617	8628	8637	8639	8649	9136	9146	9156	9157	9169
		S/T	0.32	0.38	0.43	0.43	0.49	0.34	0.40	0.46	0.46	0.52	0.36	0.43	0.49	0.49	0.55	0.39	0.45	0.51	0.52	0.59
		PI	0.39	0.39	0.39	0.39	0.39	0.41	0.41	0.41	0.41	0.41	0.44	0.44	0.44	0.44	0.44	0.46	0.46	0.46	0.46	0.46
	17°F(-8.3°C)	TC	7649	7659	7668	7668	7678	8110	8120	8128	8129	8139	8595	8606	8615	8617	8627	9112	9122	9132	9134	9145
		S/T	0.33	0.38	0.43	0.43	0.49	0.34	0.40	0.46	0.46	0.52	0.37	0.43	0.49	0.49	0.56	0.39	0.45	0.52	0.52	0.59
		PI	0.39	0.39	0.39	0.39	0.39	0.41	0.42	0.42	0.42	0.42	0.44	0.44	0.44	0.44	0.44	0.47	0.47	0.47	0.47	0.47
	23°F(-5.0°C)	TC	7550	7560	7568	7569	7579	8005	8015	8023	8024	8034	8483	8494	8504	8505	8515	8995	9004	9014	9016	9027
		S/T	0.33	0.38	0.44	0.44	0.50	0.35	0.41	0.46	0.46	0.53	0.37	0.43	0.49	0.49	0.56	0.39	0.46	0.52	0.52	0.59
		PI	0.40	0.40	0.40	0.40	0.40	0.43	0.43	0.43	0.43	0.43	0.45	0.45	0.45	0.45	0.45	0.48	0.48	0.48	0.48	0.48

Manufacturer reserves the right to change, at any time, specifications and designs without notice and without obligations.

Table 7: Cooling Performance 9K (Continued)

AIRFLOW (CFM)	OUTDOOR DB°F (°C)	ID WB°F (°C)	60.8°F(16.0°C)					64.4°F(18.0°C)					67°F(19.4°C)					71.6°F(22.0°C)				
		ID DB°F (°C)	73.4°F (23.0°C)	77.0°F (25.0°C)	80.0°F (26.7°C)	80.6°F (27.0°C)	84.2°F (29.0°C)	73.4°F (23.0°C)	77.0°F (25.0°C)	80.0°F 26.7°C)	80.6°F (27.0°C)	84.2°F (29.0°C)	73.4°F (23.0°C)	77.0°F (25.0°C)	80.0°F (26.7°C)	80.6°F (27.0°C)	84.2°F (29.0°C)	73.4°F (23.0°C)	77.0°F(25.0°C)	80.0°F (26.7°C)	80.6°F (27.0°C)	84.2°F (29.0°C)
176	35°F(1.7°C)	TC	7352	7362	7370	7371	7380	7795	7805	7812	7814	7823	8261	8272	8281	8283	8292	8759	8768	8778	8779	8790
		S/T	0.33	0.39	0.44	0.44	0.50	0.35	0.41	0.46	0.46	0.53	0.37	0.43	0.49	0.49	0.56	0.39	0.46	0.52	0.52	0.59
		PI	0.43	0.43	0.43	0.43	0.43	0.45	0.45	0.45	0.45	0.45	0.48	0.48	0.48	0.48	0.48	0.51	0.51	0.51	0.51	0.51
	41°F(5.0°C)	TC	7095	7104	7112	7112	7122	7522	7531	7539	7540	7549	7972	7982	7991	7992	8001	8452	8461	8470	8472	8482
		S/T	0.33	0.39	0.44	0.44	0.50	0.35	0.41	0.47	0.47	0.53	0.37	0.43	0.49	0.49	0.56	0.39	0.46	0.52	0.52	0.60
		PI	0.35	0.35	0.35	0.35	0.35	0.37	0.37	0.37	0.37	0.37	0.39	0.39	0.39	0.39	0.39	0.42	0.42	0.42	0.42	0.42
	47°F(8.3°C)	TC	6837	6846	6854	6854	6863	7249	7258	7265	7266	7275	7682	7692	7701	7702	7711	8145	8154	8163	8164	8174
		S/T	0.33	0.39	0.44	0.44	0.50	0.35	0.41	0.47	0.47	0.53	0.37	0.44	0.49	0.49	0.56	0.39	0.46	0.52	0.52	0.60
		PI	0.27	0.27	0.27	0.27	0.27	0.29	0.29	0.29	0.29	0.29	0.31	0.31	0.31	0.31	0.31	0.32	0.33	0.33	0.33	0.33
	50°F(10.0°C)	TC	6873	6882	6889	6890	6899	7287	7296	7303	7304	7313	7722	7732	7741	7742	7751	8188	8196	8205	8207	8217
		S/T	0.33	0.39	0.44	0.44	0.50	0.35	0.41	0.47	0.47	0.53	0.37	0.44	0.50	0.50	0.57	0.40	0.46	0.53	0.53	0.60
		PI	0.28	0.28	0.28	0.28	0.28	0.30	0.30	0.30	0.30	0.30	0.32	0.32	0.32	0.32	0.32	0.34	0.34	0.34	0.34	0.34
	59°F(15.0°C)	TC	6979	6989	6996	6997	7006	7400	7409	7416	7418	7426	7842	7852	7861	7863	7871	8315	8324	8333	8334	8344
		S/T	0.33	0.39	0.44	0.44	0.51	0.35	0.41	0.47	0.47	0.54	0.37	0.44	0.50	0.50	0.57	0.40	0.47	0.53	0.53	0.60
		PI	0.32	0.32	0.32	0.32	0.32	0.34	0.34	0.34	0.34	0.34	0.36	0.36	0.36	0.36	0.36	0.38	0.38	0.38	0.38	0.38
	68°F(20.0°C)	TC	7086	7096	7103	7104	7113	7513	7522	7530	7531	7540	7962	7972	7981	7983	7992	8442	8451	8460	8462	8472
		S/T	0.34	0.40	0.46	0.46	0.52	0.36	0.43	0.48	0.48	0.55	0.38	0.45	0.51	0.51	0.58	0.41	0.48	0.54	0.54	0.62
		PI	0.35	0.35	0.35	0.35	0.35	0.37	0.37	0.37	0.37	0.37	0.39	0.39	0.40	0.40	0.40	0.42	0.42	0.42	0.42	0.42
	77°F(25.0°C)	TC	7193	7203	7210	7211	7220	7626	7635	7643	7645	7654	8082	8093	8102	8103	8112	8569	8578	8588	8589	8600
		S/T	0.35	0.41	0.46	0.46	0.53	0.37	0.43	0.49	0.49	0.56	0.39	0.46	0.52	0.52	0.59	0.41	0.48	0.55	0.55	0.63
		PI	0.38	0.38	0.39	0.39	0.39	0.41	0.41	0.41	0.41	0.41	0.43	0.43	0.43	0.43	0.43	0.46	0.46	0.46	0.46	0.46
	82°F(27.8°C)	TC	7150	7159	7167	7167	7177	7581	7590	7597	7599	7608	8034	8044	8053	8055	8064	8518	8527	8536	8538	8548
		S/T	0.35	0.41	0.47	0.47	0.53	0.37	0.44	0.50	0.50	0.57	0.39	0.46	0.53	0.53	0.60	0.42	0.49	0.56	0.56	0.64
		PI	0.42	0.42	0.42	0.42	0.42	0.45	0.45	0.45	0.45	0.45	0.48	0.48	0.48	0.48	0.48	0.50	0.50	0.51	0.51	0.51
	86°F(30.0°C)	TC	6986	6996	7003	7003	7013	7407	7416	7423	7425	7434	7850	7860	7869	7870	7879	8323	8332	8341	8342	8352
		S/T	0.36	0.42	0.47	0.47	0.54	0.38	0.44	0.50	0.50	0.57	0.40	0.47	0.53	0.53	0.61	0.42	0.50	0.56	0.57	0.64
		PI	0.48	0.48	0.48	0.48	0.48	0.51	0.51	0.51	0.51	0.51	0.54	0.54	0.54	0.54	0.54	0.57	0.57	0.57	0.57	0.57
	95°F(35.0°C)	TC	6618	6627	6634	6634	6643	7017	7025	7032	7033	7042	7436	7445	7454	7455	7463	7884	7892	7901	7902	7912
		S/T	0.36	0.42	0.47	0.47	0.54	0.38	0.44	0.50	0.50	0.57	0.40	0.47	0.53	0.53	0.61	0.42	0.50	0.56	0.57	0.64
		PI	0.61	0.61	0.61	0.61	0.61	0.64	0.64	0.64	0.64	0.65	0.68	0.68	0.68	0.68	0.68	0.72	0.72	0.72	0.72	0.73
	104°F(40.0°C)	TC	5543	5550	5556	5557	5564	5877	5884	5890	5891	5898	6228	6236	6243	6244	6251	6603	6611	6618	6619	6627
		S/T	0.36	0.43	0.49	0.49	0.55	0.39	0.45	0.52	0.52	0.59	0.41	0.48	0.55	0.55	0.62	0.43	0.51	0.58	0.58	0.66
		PI	0.55	0.55	0.55	0.55	0.55	0.59	0.59	0.59	0.59	0.59	0.62	0.62	0.62	0.62	0.62	0.66	0.66	0.66	0.66	0.66

Manufacturer reserves the right to change, at any time, specifications and designs without notice and without obligations.

Table 7: Cooling Performance 9K (Continued)

AIRFLOW (CFM)	OUTDOOR DB°F (°C)	ID WB°F (°C)	60.8°F(16.0°C)					64.4°F(18.0°C)					67°F(19.4°C)					71.6°F(22.0°C)				
		ID DB°F (°C)	73.4°F (23.0°C)	77.0°F (25.0°C)	80.0°F (26.7°C)	80.6°F (27.0°C)	84.2°F (29.0°C)	73.4°F (23.0°C)	77.0°F (25.0°C)	80.0°F 26.7°C)	80.6°F (27.0°C)	84.2°F (29.0°C)	73.4°F (23.0°C)	77.0°F (25.0°C)	80.0°F (26.7°C)	80.6°F (27.0°C)	84.2°F (29.0°C)	73.4°F (23.0°C)	77.0°F(25.0°C)	80.0°F (26.7°C)	80.6°F (27.0°C)	84.2°F (29.0°C)
176	110°F(43.0°C)	TC	4898	4905	4910	4910	4917	5193	5200	5205	5206	5212	5504	5511	5517	5518	5524	5835	5842	5848	5849	5856
		S/T	0.38	0.44	0.50	0.50	0.57	0.40	0.47	0.53	0.53	0.61	0.42	0.50	0.57	0.57	0.65	0.45	0.53	0.60	0.60	0.68
		PI	0.52	0.52	0.52	0.52	0.52	0.55	0.55	0.55	0.55	0.55	0.58	0.58	0.58	0.58	0.59	0.62	0.62	0.62	0.62	0.62
	115°F(46.0°C)	TC	4433	4439	4444	4444	4450	4700	4706	4710	4711	4717	4981	4987	4993	4994	4999	5281	5287	5292	5293	5300
		S/T	0.38	0.45	0.51	0.51	0.58	0.41	0.48	0.54	0.54	0.62	0.43	0.50	0.57	0.57	0.65	0.46	0.53	0.61	0.61	0.69
		PI	0.53	0.53	0.53	0.53	0.53	0.56	0.56	0.56	0.56	0.56	0.59	0.59	0.59	0.59	0.59	0.63	0.63	0.63	0.63	0.63
	122°F(50.0°C)	TC	3812	3818	3822	3822	3827	4042	4047	4051	4052	4057	4284	4289	4294	4295	4300	4542	4547	4552	4552	4558
		S/T	0.39	0.46	0.52	0.52	0.59	0.41	0.49	0.55	0.55	0.63	0.44	0.52	0.59	0.59	0.67	0.47	0.55	0.62	0.62	0.71
		PI	0.53	0.53	0.54	0.54	0.54	0.57	0.57	0.57	0.57	0.57	0.60	0.60	0.60	0.60	0.60	0.64	0.64	0.64	0.64	0.64
247	5°F(-15.0°C)	TC	9468	9480	9491	9491	9504	10038	10050	10060	10062	10074	10638	10652	10664	10666	10678	11279	11291	11303	11305	11319
		S/T	0.40	0.47	0.53	0.53	0.60	0.42	0.49	0.56	0.56	0.64	0.45	0.52	0.59	0.59	0.68	0.47	0.55	0.63	0.63	0.72
		PI	0.47	0.47	0.47	0.47	0.47	0.49	0.49	0.50	0.50	0.50	0.52	0.52	0.52	0.52	0.53	0.56	0.56	0.56	0.56	0.56
	14°F(-10.0°C)	TC	9395	9408	9418	9419	9431	9962	9973	9983	9985	9997	10557	10570	10582	10584	10596	11193	11205	11217	11219	11233
		S/T	0.40	0.47	0.53	0.53	0.60	0.42	0.49	0.56	0.56	0.64	0.45	0.52	0.60	0.60	0.68	0.47	0.56	0.63	0.63	0.72
		PI	0.48	0.48	0.48	0.48	0.48	0.50	0.51	0.51	0.51	0.51	0.53	0.54	0.54	0.54	0.54	0.57	0.57	0.57	0.57	0.57
	17°F(-8.3°C)	TC	9371	9384	9394	9394	9407	9936	9948	9958	9960	9971	10530	10543	10555	10557	10569	11164	11176	11188	11190	11204
		S/T	0.40	0.47	0.53	0.53	0.61	0.42	0.50	0.56	0.56	0.64	0.45	0.53	0.60	0.60	0.68	0.47	0.56	0.63	0.63	0.72
		PI	0.48	0.48	0.48	0.48	0.48	0.51	0.51	0.51	0.51	0.51	0.54	0.54	0.54	0.54	0.54	0.57	0.57	0.57	0.57	0.57
	23°F(-5.0°C)	TC	9250	9262	9272	9273	9285	9808	9819	9829	9831	9842	10393	10407	10419	10420	10432	11020	11032	11044	11045	11059
		S/T	0.40	0.47	0.53	0.53	0.61	0.42	0.50	0.57	0.57	0.65	0.45	0.53	0.60	0.60	0.68	0.48	0.56	0.64	0.64	0.73
		PI	0.49	0.49	0.49	0.49	0.50	0.52	0.52	0.52	0.52	0.53	0.55	0.56	0.56	0.56	0.56	0.59	0.59	0.59	0.59	0.59
	35°F(1.7°C)	TC	9008	9020	9030	9030	9042	9551	9562	9571	9573	9585	10121	10134	10146	10148	10159	10731	10743	10754	10756	10769
		S/T	0.40	0.47	0.54	0.54	0.61	0.43	0.50	0.57	0.57	0.65	0.45	0.53	0.60	0.60	0.69	0.48	0.56	0.64	0.64	0.73
		PI	0.52	0.52	0.52	0.52	0.52	0.55	0.55	0.56	0.56	0.56	0.59	0.59	0.59	0.59	0.59	0.62	0.62	0.62	0.62	0.62
	41°F(5.0°C)	TC	8692	8704	8713	8714	8725	9216	9227	9236	9238	9249	9767	9779	9790	9792	9803	10355	10366	10378	10379	10392
		S/T	0.40	0.47	0.54	0.54	0.61	0.43	0.50	0.57	0.57	0.65	0.45	0.53	0.60	0.60	0.69	0.48	0.56	0.64	0.64	0.73
		PI	0.43	0.43	0.43	0.43	0.43	0.45	0.45	0.46	0.46	0.46	0.48	0.48	0.48	0.48	0.48	0.51	0.51	0.51	0.51	0.51
	47°F(8.3°C)	TC	8376	8388	8397	8397	8408	8881	8892	8901	8902	8913	9412	9424	9435	9436	9447	9979	9990	10001	10002	10015
		S/T	0.40	0.47	0.54	0.54	0.61	0.43	0.50	0.57	0.57	0.65	0.45	0.53	0.61	0.61	0.69	0.48	0.57	0.64	0.64	0.73
		PI	0.33	0.33	0.33	0.33	0.34	0.35	0.35	0.35	0.36	0.36	0.38	0.38	0.38	0.38	0.38	0.40	0.40	0.40	0.40	0.40
	50°F(10.0°C)	TC	8420	8431	8440	8441	8452	8928	8938	8947	8949	8959	9461	9473	9484	9485	9496	10031	10042	10053	10054	10067
		S/T	0.41	0.48	0.54	0.54	0.62	0.43	0.51	0.57	0.57	0.66	0.46	0.54	0.61	0.61	0.69	0.48	0.57	0.65	0.65	0.74
		PI	0.35	0.35	0.35	0.35	0.35	0.37	0.37	0.37	0.37	0.37	0.39	0.39	0.39	0.39	0.39	0.41	0.41	0.42	0.42	0.42

Manufacturer reserves the right to change, at any time, specifications and designs without notice and without obligations.

Table 7: Cooling Performance 9K (Continued)

AIRFLOW (CFM)	OUTDOOR DB°F (℃)	ID WB°F (℃)	60.8°F(16.0℃)					64.4°F(18.0℃)					67°F(19.4℃)					71.6°F(22.0℃)				
		ID DB°F (℃)	73.4°F (23.0℃)	77.0°F (25.0℃)	80.0°F (26.7℃)	80.6°F (27.0℃)	84.2°F (29.0℃)	73.4°F (23.0℃)	77.0°F (25.0℃)	80.0°F 26.7℃)	80.6°F (27.0℃)	84.2°F (29.0℃)	73.4°F (23.0℃)	77.0°F (25.0℃)	80.0°F (26.7℃)	80.6°F (27.0℃)	84.2°F (29.0℃)	73.4°F (23.0℃)	77.0°F(25.0℃)	80.0°F (26.7℃)	80.6°F (27.0℃)	84.2°F (29.0℃)
247	59°F(15.0℃)	TC	8551	8562	8572	8572	8584	9066	9077	9086	9088	9098	9608	9620	9631	9633	9644	10187	10198	10209	10210	10223
		S/T	0.41	0.48	0.54	0.54	0.62	0.43	0.51	0.58	0.58	0.66	0.46	0.54	0.61	0.61	0.70	0.49	0.57	0.65	0.65	0.74
		PI	0.39	0.39	0.39	0.39	0.39	0.41	0.41	0.41	0.41	0.41	0.44	0.44	0.44	0.44	0.44	0.46	0.46	0.46	0.46	0.46
	68°F(20.0℃)	TC	8682	8693	8703	8703	8715	9205	9216	9225	9227	9238	9755	9767	9778	9780	9791	10343	10354	10365	10367	10380
		S/T	0.42	0.49	0.56	0.56	0.64	0.44	0.52	0.59	0.59	0.68	0.47	0.55	0.63	0.63	0.72	0.50	0.59	0.67	0.67	0.76
		PI	0.43	0.43	0.43	0.43	0.43	0.46	0.46	0.46	0.46	0.46	0.48	0.48	0.48	0.48	0.48	0.51	0.51	0.51	0.51	0.51
	77°F(25.0℃)	TC	8812	8824	8834	8834	8846	9344	9355	9364	9366	9377	9902	9915	9926	9928	9939	10498	10510	10521	10523	10536
		S/T	0.42	0.50	0.57	0.57	0.65	0.45	0.53	0.60	0.60	0.68	0.48	0.56	0.64	0.64	0.73	0.51	0.59	0.67	0.67	0.77
		PI	0.47	0.47	0.47	0.47	0.47	0.50	0.50	0.50	0.50	0.50	0.53	0.53	0.53	0.53	0.53	0.56	0.56	0.56	0.56	0.56
	82°F(27.8℃)	TC	8760	8771	8781	8781	8793	9288	9299	9308	9310	9321	9842	9855	9866	9868	9879	10435	10447	10458	10460	10473
		S/T	0.43	0.51	0.57	0.57	0.65	0.46	0.54	0.61	0.61	0.69	0.48	0.57	0.64	0.64	0.74	0.51	0.60	0.68	0.68	0.78
		PI	0.52	0.52	0.52	0.52	0.52	0.55	0.55	0.55	0.55	0.55	0.58	0.58	0.58	0.58	0.58	0.62	0.62	0.62	0.62	0.62
	86°F(30.0℃)	TC	8559	8571	8580	8580	8592	9075	9086	9095	9096	9107	9617	9630	9640	9642	9653	10196	10208	10219	10220	10233
		S/T	0.44	0.51	0.58	0.58	0.66	0.46	0.54	0.62	0.62	0.70	0.49	0.57	0.65	0.65	0.74	0.52	0.61	0.69	0.69	0.79
		PI	0.59	0.59	0.59	0.59	0.59	0.62	0.62	0.62	0.62	0.63	0.66	0.66	0.66	0.66	0.66	0.70	0.70	0.70	0.70	0.70
	95°F(35.0℃)	TC	8108	8119	8127	8128	8139	8596	8606	8615	8617	8627	9110	9122	9132	9134	9144	9659	9669	9680	9681	9693
		S/T	0.44	0.51	0.58	0.58	0.66	0.46	0.54	0.62	0.62	0.70	0.49	0.57	0.65	0.65	0.74	0.52	0.61	0.69	0.69	0.79
		PI	0.74	0.74	0.75	0.75	0.75	0.79	0.79	0.79	0.79	0.79	0.84	0.84	0.84	0.84	0.84	0.89	0.89	0.89	0.89	0.89
	104°F(40.0℃)	TC	6791	6800	6807	6808	6817	7200	7209	7216	7217	7226	7630	7640	7649	7650	7659	8090	8099	8108	8109	8119
		S/T	0.45	0.52	0.60	0.60	0.68	0.47	0.56	0.63	0.63	0.72	0.50	0.59	0.67	0.67	0.76	0.53	0.62	0.71	0.71	0.81
		PI	0.68	0.68	0.68	0.68	0.68	0.72	0.72	0.72	0.72	0.72	0.76	0.76	0.76	0.76	0.76	0.81	0.81	0.81	0.81	0.81
	110°F(43.0℃)	TC	6001	6009	6016	6016	6024	6363	6370	6377	6378	6385	6743	6752	6759	6760	6768	7149	7157	7165	7166	7175
		S/T	0.46	0.54	0.62	0.62	0.70	0.49	0.58	0.65	0.65	0.75	0.52	0.61	0.69	0.69	0.79	0.55	0.65	0.74	0.74	0.84
		PI	0.64	0.64	0.64	0.64	0.64	0.67	0.67	0.68	0.68	0.68	0.71	0.72	0.72	0.72	0.72	0.76	0.76	0.76	0.76	0.76
	115°F(46.0℃)	TC	5431	5438	5444	5444	5452	5758	5765	5771	5772	5779	6102	6110	6117	6118	6125	6470	6477	6484	6485	6493
		S/T	0.47	0.55	0.62	0.62	0.71	0.50	0.58	0.66	0.66	0.75	0.53	0.62	0.70	0.70	0.80	0.56	0.65	0.74	0.74	0.85
		PI	0.64	0.64	0.65	0.65	0.65	0.68	0.68	0.68	0.68	0.68	0.72	0.72	0.72	0.73	0.73	0.77	0.77	0.77	0.77	0.77
	122°F(50.0℃)	TC	4671	4677	4682	4682	4689	4952	4958	4963	4964	4970	5248	5255	5261	5262	5268	5564	5570	5576	5577	5584
		S/T	0.48	0.56	0.64	0.64	0.73	0.51	0.60	0.68	0.68	0.77	0.54	0.63	0.72	0.72	0.82	0.57	0.67	0.76	0.76	0.87
		PI	0.65	0.66	0.66	0.66	0.66	0.69	0.69	0.70	0.70	0.70	0.74	0.74	0.74	0.74	0.74	0.78	0.78	0.78	0.78	0.78
312	5°F(-15.0℃)	TC	11599	11615	11627	11628	11644	12298	12313	12325	12327	12342	13033	13050	13065	13067	13082	13818	13833	13848	13851	13868
		S/T	0.49	0.57	0.65	0.65	0.74	0.51	0.60	0.69	0.69	0.78	0.55	0.64	0.73	0.73	0.83	0.58	0.68	0.77	0.77	0.88
		PI	0.57	0.57	0.57	0.57	0.57	0.61	0.61	0.61	0.61	0.61	0.64	0.64	0.64	0.64	0.64	0.68	0.68	0.68	0.68	0.68

Manufacturer reserves the right to change, at any time, specifications and designs without notice and without obligations.

Table 7: Cooling Performance 9K (Continued)

AIRFLOW (CFM)	OUTDOOR DB°F (°C)	ID WB°F (°C)	60.8°F(16.0°C)					64.4°F(18.0°C)					67°F(19.4°C)					71.6°F(22.0°C)				
		ID DB°F (°C)	73.4°F (23.0°C)	77.0°F (25.0°C)	80.0°F (26.7°C)	80.6°F (27.0°C)	84.2°F (29.0°C)	73.4°F (23.0°C)	77.0°F (25.0°C)	80.0°F 26.7°C)	80.6°F (27.0°C)	84.2°F (29.0°C)	73.4°F (23.0°C)	77.0°F (25.0°C)	80.0°F (26.7°C)	80.6°F (27.0°C)	84.2°F (29.0°C)	73.4°F (23.0°C)	77.0°F(25.0°C)	80.0°F (26.7°C)	80.6°F (27.0°C)	84.2°F (29.0°C)
312	14°F(-10.0°C)	TC	11511	11526	11539	11539	11555	12204	12219	12231	12233	12248	12934	12950	12965	12967	12982	13713	13728	13743	13745	13762
		S/T	0.49	0.57	0.65	0.65	0.74	0.52	0.61	0.69	0.69	0.78	0.55	0.64	0.73	0.73	0.83	0.58	0.68	0.77	0.77	0.88
		PI	0.58	0.58	0.58	0.58	0.59	0.62	0.62	0.62	0.62	0.62	0.65	0.66	0.66	0.66	0.66	0.69	0.70	0.70	0.70	0.70
	17°F(-8.3°C)	TC	11481	11497	11509	11509	11525	12173	12187	12200	12202	12216	12900	12917	12931	12934	12948	13678	13692	13707	13710	13727
		S/T	0.49	0.57	0.65	0.65	0.74	0.52	0.61	0.69	0.69	0.79	0.55	0.64	0.73	0.73	0.83	0.58	0.68	0.78	0.78	0.88
		PI	0.59	0.59	0.59	0.59	0.59	0.62	0.62	0.62	0.62	0.62	0.66	0.66	0.66	0.66	0.66	0.70	0.70	0.70	0.70	0.70
	23°F(-5.0°C)	TC	11333	11348	11360	11361	11376	12016	12030	12042	12044	12058	12734	12750	12764	12767	12781	13501	13515	13530	13532	13549
		S/T	0.49	0.58	0.65	0.65	0.75	0.52	0.61	0.69	0.69	0.79	0.55	0.65	0.74	0.74	0.84	0.58	0.69	0.78	0.78	0.89
		PI	0.60	0.61	0.61	0.61	0.61	0.64	0.64	0.64	0.64	0.64	0.68	0.68	0.68	0.68	0.68	0.72	0.72	0.72	0.72	0.72
	35°F(1.7°C)	TC	11036	11051	11063	11063	11078	11701	11715	11726	11729	11743	12400	12416	12430	12432	12446	13147	13161	13176	13178	13194
		S/T	0.49	0.58	0.66	0.66	0.75	0.52	0.61	0.70	0.70	0.79	0.55	0.65	0.74	0.74	0.84	0.59	0.69	0.78	0.78	0.89
		PI	0.64	0.64	0.64	0.64	0.64	0.68	0.68	0.68	0.68	0.68	0.72	0.72	0.72	0.72	0.72	0.76	0.76	0.76	0.76	0.77
	41°F(5.0°C)	TC	10649	10663	10675	10675	10690	11291	11304	11315	11318	11331	11965	11981	11994	11997	12010	12686	12700	12714	12716	12732
		S/T	0.49	0.58	0.66	0.66	0.75	0.52	0.61	0.70	0.70	0.80	0.56	0.65	0.74	0.74	0.84	0.59	0.69	0.78	0.78	0.89
		PI	0.52	0.53	0.53	0.53	0.53	0.56	0.56	0.56	0.56	0.56	0.59	0.59	0.59	0.59	0.59	0.63	0.63	0.63	0.63	0.63
	47°F(8.3°C)	TC	10262	10276	10287	10288	10302	10881	10894	10905	10907	10920	11531	11546	11559	11561	11574	12226	12239	12252	12254	12270
		S/T	0.50	0.58	0.66	0.66	0.75	0.53	0.62	0.70	0.70	0.80	0.56	0.65	0.74	0.74	0.85	0.59	0.69	0.79	0.79	0.90
		PI	0.41	0.41	0.41	0.41	0.41	0.43	0.43	0.43	0.43	0.44	0.46	0.46	0.46	0.46	0.46	0.49	0.49	0.49	0.49	0.49
	50°F(10.0°C)	TC	10316	10330	10341	10341	10355	10938	10950	10961	10963	10976	11591	11606	11619	11621	11634	12289	12303	12316	12318	12333
		S/T	0.50	0.58	0.66	0.66	0.76	0.53	0.62	0.70	0.70	0.80	0.56	0.66	0.75	0.75	0.85	0.59	0.70	0.79	0.79	0.90
		PI	0.43	0.43	0.43	0.43	0.43	0.45	0.45	0.45	0.45	0.45	0.48	0.48	0.48	0.48	0.48	0.51	0.51	0.51	0.51	0.51
	59°F(15.0°C)	TC	10476	10490	10501	10502	10516	11107	11121	11132	11134	11147	11771	11786	11799	11802	11815	12480	12494	12507	12509	12525
		S/T	0.50	0.59	0.67	0.67	0.76	0.53	0.62	0.71	0.71	0.81	0.56	0.66	0.75	0.75	0.86	0.60	0.70	0.80	0.80	0.91
		PI	0.48	0.48	0.48	0.48	0.48	0.51	0.51	0.51	0.51	0.51	0.54	0.54	0.54	0.54	0.54	0.57	0.57	0.57	0.57	0.57
	68°F(20.0°C)	TC	10636	10651	10662	10663	10677	11277	11291	11302	11304	11317	11951	11967	11980	11982	11996	12671	12685	12699	12701	12717
		S/T	0.51	0.60	0.69	0.69	0.78	0.54	0.64	0.73	0.73	0.83	0.58	0.68	0.77	0.77	0.88	0.61	0.72	0.82	0.82	0.93
		PI	0.53	0.53	0.53	0.53	0.53	0.56	0.56	0.56	0.56	0.56	0.59	0.59	0.59	0.59	0.59	0.63	0.63	0.63	0.63	0.63
	77°F(25.0°C)	TC	10797	10811	10823	10823	10838	11447	11461	11472	11474	11488	12131	12147	12160	12163	12176	12862	12876	12890	12892	12908
		S/T	0.52	0.61	0.69	0.69	0.79	0.55	0.65	0.74	0.74	0.84	0.59	0.69	0.78	0.78	0.89	0.62	0.73	0.83	0.83	0.94
		PI	0.58	0.58	0.58	0.58	0.58	0.61	0.61	0.61	0.61	0.61	0.65	0.65	0.65	0.65	0.65	0.69	0.69	0.69	0.69	0.69
	82°F(27.8°C)	TC	10732	10746	10758	10758	10773	11379	11392	11403	11406	11419	12058	12074	12088	12090	12103	12785	12799	12813	12815	12831
		S/T	0.53	0.62	0.70	0.70	0.80	0.56	0.66	0.75	0.75	0.85	0.59	0.70	0.79	0.79	0.90	0.63	0.74	0.84	0.84	0.95
		PI	0.64	0.64	0.64	0.64	0.64	0.67	0.67	0.67	0.67	0.68	0.71	0.71	0.72	0.72	0.72	0.76	0.76	0.76	0.76	0.76

Manufacturer reserves the right to change, at any time, specifications and designs without notice and without obligations.

Table 7: Cooling Performance 9K (Continued)

AIRFLOW (CFM)	OUTDOOR DB°F (°C)	ID WB°F (°C)	60.8°F(16.0°C)					64.4°F(18.0°C)					67°F(19.4°C)					71.6°F(22.0°C)				
		ID DB°F (°C)	73.4°F (23.0°C)	77.0°F (25.0°C)	80.0°F (26.7°C)	80.6°F (27.0°C)	84.2°F (29.0°C)	73.4°F (23.0°C)	77.0°F (25.0°C)	80.0°F 26.7°C)	80.6°F (27.0°C)	84.2°F (29.0°C)	73.4°F (23.0°C)	77.0°F (25.0°C)	80.0°F (26.7°C)	80.6°F (27.0°C)	84.2°F (29.0°C)	73.4°F (23.0°C)	77.0°F(25.0°C)	80.0°F (26.7°C)	80.6°F (27.0°C)	84.2°F (29.0°C)
312	86°F(30.0°C)	TC	10486	10500	10512	10512	10526	11118	11131	11142	11144	11158	11782	11798	11811	11813	11826	12492	12506	12519	12521	12537
		S/T	0.53	0.63	0.71	0.71	0.81	0.57	0.66	0.75	0.75	0.86	0.60	0.70	0.80	0.80	0.91	0.64	0.75	0.85	0.85	0.97
		PI	0.72	0.72	0.72	0.72	0.72	0.76	0.76	0.77	0.77	0.77	0.81	0.81	0.81	0.81	0.81	0.86	0.86	0.86	0.86	0.86
	95°F(35.0°C)	TC	9933	9947	9957	9958	9971	10532	10544	10555	10557	10569	11161	11175	11188	11190	11203	11833	11846	11859	11861	11876
		S/T	0.53	0.63	0.71	0.71	0.81	0.57	0.66	0.75	0.75	0.86	0.60	0.70	0.80	0.80	0.91	0.64	0.75	0.85	0.85	0.97
		PI	0.91	0.91	0.91	0.91	0.91	0.97	0.97	0.97	0.97	0.97	1.02	1.02	1.03	1.03	1.03	1.09	1.09	1.09	1.09	1.09
	104°F(40.0°C)	TC	8320	8331	8340	8341	8352	8821	8832	8841	8842	8853	9348	9361	9371	9373	9383	9912	9923	9933	9935	9947
		S/T	0.55	0.64	0.73	0.73	0.83	0.58	0.68	0.77	0.77	0.88	0.62	0.72	0.82	0.82	0.93	0.65	0.76	0.87	0.87	0.99
		PI	0.83	0.83	0.83	0.83	0.83	0.88	0.88	0.88	0.88	0.88	0.93	0.93	0.93	0.93	0.93	0.99	0.99	0.99	0.99	0.99
	110°F(43.0°C)	TC	7352	7362	7370	7370	7380	7795	7804	7812	7814	7823	8261	8272	8281	8282	8292	8759	8768	8778	8779	8790
		S/T	0.57	0.67	0.76	0.76	0.86	0.60	0.71	0.80	0.80	0.91	0.64	0.75	0.85	0.85	0.97	0.68	0.79	0.90	0.90	1.00
		PI	0.78	0.78	0.78	0.78	0.78	0.83	0.83	0.83	0.83	0.83	0.87	0.88	0.88	0.88	0.88	0.93	0.93	0.93	0.93	0.93
	115°F(46.0°C)	TC	6654	6663	6670	6670	6679	7055	7063	7070	7071	7080	7476	7486	7494	7496	7504	7927	7935	7944	7945	7955
		S/T	0.57	0.67	0.77	0.77	0.87	0.61	0.71	0.81	0.81	0.92	0.65	0.76	0.86	0.86	0.98	0.68	0.80	0.91	0.91	1.00
		PI	0.79	0.79	0.79	0.79	0.79	0.84	0.84	0.84	0.84	0.84	0.89	0.89	0.89	0.89	0.89	0.94	0.94	0.94	0.94	0.94
	122°F(50.0°C)	TC	5722	5730	5736	5737	5744	6067	6074	6080	6082	6089	6430	6438	6445	6446	6454	6817	6825	6832	6833	6842
		S/T	0.59	0.69	0.78	0.78	0.89	0.62	0.73	0.83	0.83	0.95	0.66	0.77	0.88	0.88	1.00	0.70	0.82	0.93	0.93	1.00
		PI	0.80	0.80	0.80	0.80	0.80	0.85	0.85	0.85	0.85	0.85	0.90	0.90	0.90	0.90	0.90	0.96	0.96	0.96	0.96	0.96

LEGEND

TC: Total Cooling Capacity (BTU/hr)
S/T: Sensible Cooling Capacity Ratio
PI: Power Input (kW)

Manufacturer reserves the right to change, at any time, specifications and designs without notice and without obligations.

Table 8: Cooling Performance 12K

AIRFLOW (CFM)	OUTDOOR DB °F (°C)	ID WB°F (°C)	60.8°F(16.0°C)					64.4°F(18.0°C)					67°F(19.4°C)					71.6°F(22.0°C)				
		ID DB°F (°C)	73.4°F (23.0°C)	77.0°F (25.0°C)	80.0°F (26.7°C)	80.6°F (27.0°C)	84.2°F (29.0°C)	73.4°F (23.0°C)	77.0°F (25.0°C)	80.0°F 26.7°C)	80.6°F (27.0°C)	84.2°F (29.0°C)	73.4°F (23.0°C)	77.0°F (25.0°C)	80.0°F (26.7°C)	80.6°F (27.0°C)	84.2°F (29.0°C)	73.4°F (23.0°C)	77.0°F(25.0°C)	80.0°F (26.7°C)	80.6°F (27.0°C)	84.2°F (29.0°C)
194	5°F(-15.0°C)	TC	10269	10283	10294	10294	10308	10888	10901	10912	10914	10927	11538	11553	11566	11568	11581	12234	12247	12260	12262	12278
		S/T	0.45	0.53	0.61	0.61	0.69	0.48	0.56	0.64	0.64	0.73	0.51	0.60	0.68	0.68	0.78	0.54	0.63	0.72	0.72	0.82
		PI	0.48	0.48	0.48	0.48	0.48	0.50	0.51	0.51	0.51	0.51	0.54	0.54	0.54	0.54	0.54	0.57	0.57	0.57	0.57	0.57
	14°F(-10.0°C)	TC	10953	10967	10979	10980	10995	11613	11626	11638	11640	11654	12307	12323	12336	12339	12352	13048	13062	13076	13078	13095
		S/T	0.45	0.53	0.61	0.61	0.69	0.48	0.57	0.64	0.64	0.73	0.51	0.60	0.68	0.68	0.78	0.54	0.64	0.72	0.72	0.82
		PI	0.45	0.45	0.45	0.45	0.45	0.48	0.48	0.48	0.48	0.48	0.51	0.51	0.51	0.51	0.51	0.54	0.54	0.54	0.54	0.54
	17°F(-8.3°C)	TC	11181	11196	11208	11208	11223	11854	11868	11880	11882	11897	12563	12579	12593	12595	12609	13319	13334	13348	13351	13367
		S/T	0.46	0.54	0.61	0.61	0.69	0.48	0.57	0.64	0.64	0.74	0.51	0.60	0.68	0.68	0.78	0.54	0.64	0.72	0.72	0.83
		PI	0.45	0.45	0.45	0.45	0.45	0.47	0.47	0.47	0.47	0.47	0.50	0.50	0.50	0.50	0.50	0.53	0.53	0.53	0.53	0.53
	23°F(-5.0°C)	TC	11013	11027	11039	11040	11055	11676	11690	11702	11704	11718	12374	12390	12404	12406	12420	13119	13134	13148	13150	13166
		S/T	0.46	0.54	0.61	0.61	0.70	0.49	0.57	0.65	0.65	0.74	0.52	0.60	0.69	0.69	0.78	0.55	0.64	0.73	0.73	0.83
		PI	0.49	0.49	0.49	0.49	0.50	0.52	0.52	0.52	0.52	0.52	0.55	0.55	0.56	0.56	0.56	0.59	0.59	0.59	0.59	0.59
	35°F(1.7°C)	TC	10677	10691	10703	10703	10717	11320	11334	11345	11347	11360	11996	12012	12025	12028	12041	12719	12733	12747	12749	12765
		S/T	0.46	0.54	0.61	0.61	0.70	0.49	0.57	0.65	0.65	0.74	0.52	0.61	0.69	0.69	0.79	0.55	0.64	0.73	0.73	0.83
		PI	0.59	0.59	0.59	0.59	0.59	0.62	0.63	0.63	0.63	0.63	0.66	0.66	0.66	0.66	0.66	0.70	0.70	0.70	0.70	0.70
	41°F(5.0°C)	TC	10363	10376	10388	10388	10402	10987	11000	11011	11013	11026	11643	11659	11672	11674	11687	12345	12358	12372	12374	12389
		S/T	0.46	0.54	0.62	0.62	0.70	0.49	0.57	0.65	0.65	0.74	0.52	0.61	0.69	0.69	0.79	0.55	0.65	0.73	0.73	0.84
		PI	0.48	0.48	0.49	0.49	0.49	0.51	0.51	0.51	0.51	0.52	0.54	0.54	0.55	0.55	0.55	0.58	0.58	0.58	0.58	0.58
	47°F(8.3°C)	TC	10048	10062	10073	10073	10087	10654	10667	10677	10679	10692	11290	11305	11318	11320	11332	11971	11984	11997	11999	12014
		S/T	0.46	0.54	0.62	0.62	0.70	0.49	0.58	0.65	0.65	0.75	0.52	0.61	0.69	0.69	0.79	0.55	0.65	0.74	0.74	0.84
		PI	0.38	0.38	0.38	0.38	0.38	0.40	0.40	0.40	0.40	0.40	0.43	0.43	0.43	0.43	0.43	0.45	0.45	0.45	0.45	0.45
	50°F(10.0°C)	TC	10104	10117	10128	10129	10142	10713	10725	10736	10738	10751	11353	11367	11380	11382	11395	12037	12050	12063	12065	12080
		S/T	0.47	0.55	0.62	0.62	0.71	0.49	0.58	0.66	0.66	0.75	0.52	0.61	0.70	0.70	0.79	0.55	0.65	0.74	0.74	0.84
		PI	0.39	0.39	0.39	0.39	0.39	0.42	0.42	0.42	0.42	0.42	0.44	0.44	0.44	0.44	0.44	0.47	0.47	0.47	0.47	0.47
	59°F(15.0°C)	TC	10270	10284	10295	10296	10309	10889	10902	10913	10915	10928	11540	11555	11568	11570	11583	12235	12248	12262	12264	12279
		S/T	0.47	0.55	0.62	0.62	0.71	0.50	0.58	0.66	0.66	0.75	0.53	0.62	0.70	0.70	0.80	0.56	0.65	0.74	0.74	0.85
		PI	0.43	0.43	0.43	0.43	0.44	0.46	0.46	0.46	0.46	0.46	0.49	0.49	0.49	0.49	0.49	0.52	0.52	0.52	0.52	0.52
	68°F(20.0°C)	TC	10437	10451	10462	10462	10477	11066	11079	11090	11092	11105	11727	11742	11755	11757	11770	12433	12447	12460	12462	12478
		S/T	0.48	0.56	0.64	0.64	0.73	0.51	0.60	0.68	0.68	0.77	0.54	0.63	0.72	0.72	0.82	0.57	0.67	0.76	0.76	0.87
		PI	0.47	0.48	0.48	0.48	0.48	0.50	0.50	0.50	0.50	0.51	0.53	0.53	0.53	0.53	0.54	0.57	0.57	0.57	0.57	0.57
	77°F(25.0°C)	TC	10603	10617	10629	10629	10644	11242	11255	11267	11269	11282	11914	11929	11943	11945	11958	12632	12645	12659	12661	12677
		S/T	0.49	0.57	0.65	0.65	0.74	0.52	0.61	0.69	0.69	0.78	0.55	0.64	0.73	0.73	0.83	0.58	0.68	0.77	0.77	0.88
		PI	0.52	0.52	0.52	0.52	0.52	0.55	0.55	0.55	0.55	0.55	0.58	0.58	0.58	0.58	0.58	0.61	0.61	0.62	0.62	0.62

Manufacturer reserves the right to change, at any time, specifications and designs without notice and without obligations.

Table 8: Cooling Performance 12K (Continued)

AIRFLOW (CFM)	OUTDOOR DB °F (°C)	ID WB°F (°C)	60.8°F(16.0°C)					64.4°F(18.0°C)					67°F(19.4°C)					71.6°F(22.0°C)				
		ID DB°F (°C)	73.4°F (23.0°C)	77.0°F (25.0°C)	80.0°F (26.7°C)	80.6°F (27.0°C)	84.2°F (29.0°C)	73.4°F (23.0°C)	77.0°F (25.0°C)	80.0°F 26.7°C)	80.6°F (27.0°C)	84.2°F (29.0°C)	73.4°F (23.0°C)	77.0°F (25.0°C)	80.0°F (26.7°C)	80.6°F (27.0°C)	84.2°F (29.0°C)	73.4°F (23.0°C)	77.0°F(25.0°C)	80.0°F (26.7°C)	80.6°F (27.0°C)	84.2°F (29.0°C)
194	82°F(27.8°C)	TC	10599	10613	10625	10625	10640	11238	11251	11262	11264	11278	11909	11925	11938	11940	11954	12627	12641	12654	12656	12672
		S/T	0.49	0.58	0.66	0.66	0.75	0.52	0.61	0.70	0.70	0.79	0.55	0.65	0.74	0.74	0.84	0.59	0.69	0.78	0.78	0.89
		PI	0.57	0.58	0.58	0.58	0.58	0.61	0.61	0.61	0.61	0.61	0.65	0.65	0.65	0.65	0.65	0.68	0.69	0.69	0.69	0.69
	86°F(30.0°C)	TC	10474	10488	10499	10500	10514	11105	11118	11129	11132	11145	11769	11784	11797	11799	11813	12478	12491	12505	12507	12523
		S/T	0.50	0.59	0.67	0.67	0.76	0.53	0.62	0.71	0.71	0.80	0.56	0.66	0.75	0.75	0.85	0.59	0.70	0.79	0.79	0.90
		PI	0.67	0.67	0.67	0.67	0.67	0.71	0.71	0.71	0.71	0.71	0.75	0.75	0.75	0.75	0.75	0.80	0.80	0.80	0.80	0.80
	95°F(35.0°C)	TC	10193	10206	10217	10218	10232	10807	10820	10830	10833	10845	11453	11467	11480	11482	11495	12143	12156	12169	12171	12186
		S/T	0.50	0.59	0.67	0.67	0.76	0.53	0.62	0.71	0.71	0.80	0.56	0.66	0.75	0.75	0.85	0.59	0.70	0.79	0.79	0.90
		PI	0.88	0.88	0.88	0.88	0.88	0.93	0.93	0.93	0.93	0.93	0.99	0.99	0.99	0.99	0.99	1.05	1.05	1.05	1.05	1.05
	104°F(40.0°C)	TC	8967	8979	8988	8989	9001	9507	9518	9528	9530	9541	10075	10088	10099	10101	10113	10682	10694	10705	10707	10720
		S/T	0.51	0.60	0.68	0.68	0.78	0.54	0.64	0.72	0.72	0.82	0.57	0.67	0.77	0.77	0.87	0.61	0.71	0.81	0.81	0.93
		PI	0.88	0.88	0.88	0.88	0.88	0.93	0.93	0.93	0.93	0.93	0.99	0.99	0.99	0.99	0.99	1.05	1.05	1.05	1.05	1.05
	110°F(43.0°C)	TC	8231	8242	8251	8251	8263	8727	8738	8746	8748	8758	9249	9261	9271	9273	9283	9806	9816	9827	9829	9841
		S/T	0.53	0.62	0.71	0.71	0.81	0.56	0.66	0.75	0.75	0.85	0.60	0.70	0.79	0.79	0.91	0.63	0.74	0.84	0.84	0.96
		PI	0.88	0.88	0.88	0.88	0.88	0.93	0.93	0.93	0.93	0.93	0.99	0.99	0.99	0.99	0.99	1.05	1.05	1.05	1.05	1.05
	115°F(46.0°C)	TC	7088	7098	7106	7106	7116	7516	7525	7532	7533	7542	7965	7975	7984	7985	7994	8445	8454	8463	8464	8475
		S/T	0.54	0.63	0.72	0.72	0.82	0.57	0.67	0.76	0.76	0.86	0.60	0.71	0.80	0.80	0.92	0.64	0.75	0.85	0.85	0.97
		PI	0.81	0.81	0.81	0.81	0.82	0.86	0.86	0.86	0.86	0.86	0.91	0.91	0.91	0.91	0.92	0.97	0.97	0.97	0.97	0.97
	122°F(50.0°C)	TC	5565	5572	5578	5579	5586	5900	5907	5913	5914	5921	6253	6261	6268	6269	6276	6629	6637	6644	6645	6653
		S/T	0.55	0.64	0.73	0.73	0.83	0.58	0.68	0.78	0.78	0.88	0.62	0.72	0.82	0.82	0.94	0.65	0.77	0.87	0.87	0.99
		PI	0.72	0.73	0.73	0.73	0.73	0.77	0.77	0.77	0.77	0.77	0.81	0.82	0.82	0.82	0.82	0.86	0.86	0.87	0.87	0.87
232	5°F(-15.0°C)	TC	10504	10518	10530	10530	10544	11137	11150	11161	11164	11177	11803	11818	11831	11833	11846	12514	12527	12541	12543	12558
		S/T	0.46	0.54	0.62	0.62	0.71	0.49	0.58	0.66	0.66	0.75	0.52	0.61	0.70	0.70	0.79	0.55	0.65	0.74	0.74	0.84
		PI	0.49	0.49	0.49	0.49	0.49	0.52	0.52	0.52	0.52	0.52	0.55	0.55	0.55	0.55	0.55	0.58	0.58	0.58	0.58	0.58
	14°F(-10.0°C)	TC	11203	11218	11230	11231	11246	11879	11893	11904	11907	11921	12588	12605	12619	12621	12635	13347	13361	13376	13378	13394
		S/T	0.47	0.55	0.62	0.62	0.71	0.49	0.58	0.66	0.66	0.75	0.52	0.61	0.70	0.70	0.79	0.55	0.65	0.74	0.74	0.84
		PI	0.46	0.46	0.46	0.46	0.47	0.49	0.49	0.49	0.49	0.49	0.52	0.52	0.52	0.52	0.52	0.55	0.55	0.55	0.55	0.55
	17°F(-8.3°C)	TC	11436	11452	11464	11465	11480	12126	12140	12152	12154	12169	12850	12867	12881	12883	12898	13624	13639	13654	13656	13673
		S/T	0.47	0.55	0.62	0.62	0.71	0.49	0.58	0.66	0.66	0.75	0.52	0.62	0.70	0.70	0.80	0.56	0.65	0.74	0.74	0.84
		PI	0.46	0.46	0.46	0.46	0.46	0.48	0.48	0.48	0.48	0.48	0.51	0.51	0.51	0.51	0.51	0.54	0.54	0.54	0.54	0.54
	23°F(-5.0°C)	TC	11265	11280	11292	11292	11308	11943	11958	11969	11972	11986	12657	12673	12688	12690	12704	13420	13434	13449	13451	13468
		S/T	0.47	0.55	0.63	0.63	0.71	0.50	0.58	0.66	0.66	0.76	0.53	0.62	0.70	0.70	0.80	0.56	0.66	0.74	0.74	0.85
		PI	0.50	0.51	0.51	0.51	0.51	0.53	0.54	0.54	0.54	0.54	0.57	0.57	0.57	0.57	0.57	0.60	0.60	0.60	0.60	0.60

Manufacturer reserves the right to change, at any time, specifications and designs without notice and without obligations.

Table 8: Cooling Performance 12K (Continued)

AIRFLOW (CFM)	OUTDOOR DB °F (℃)	ID WB°F (℃)	60.8°F(16.0℃)					64.4°F(18.0℃)					67°F(19.4℃)					71.6°F(22.0℃)				
		ID DB°F (℃)	73.4°F (23.0℃)	77.0°F (25.0℃)	80.0°F (26.7℃)	80.6°F (27.0℃)	84.2°F (29.0℃)	73.4°F (23.0℃)	77.0°F (25.0℃)	80.0°F 26.7℃)	80.6°F (27.0℃)	84.2°F (29.0℃)	73.4°F (23.0℃)	77.0°F (25.0℃)	80.0°F (26.7℃)	80.6°F (27.0℃)	84.2°F (29.0℃)	73.4°F (23.0℃)	77.0°F(25.0℃)	80.0°F (26.7℃)	80.6°F (27.0℃)	84.2°F (29.0℃)
232	35°F(1.7℃)	TC	10921	10936	10948	10948	10963	11579	11593	11604	11607	11620	12271	12287	12301	12303	12317	13010	13024	13039	13041	13057
		S/T	0.47	0.55	0.63	0.63	0.72	0.50	0.59	0.67	0.67	0.76	0.53	0.62	0.71	0.71	0.80	0.56	0.66	0.75	0.75	0.85
		PI	0.60	0.60	0.60	0.60	0.61	0.64	0.64	0.64	0.64	0.64	0.68	0.68	0.68	0.68	0.68	0.72	0.72	0.72	0.72	0.72
	41°F(5.0℃)	TC	10600	10614	10625	10626	10640	11238	11252	11263	11265	11278	11910	11925	11939	11941	11954	12627	12641	12655	12657	12673
		S/T	0.47	0.55	0.63	0.63	0.72	0.50	0.59	0.67	0.67	0.76	0.53	0.62	0.71	0.71	0.81	0.56	0.66	0.75	0.75	0.85
		PI	0.50	0.50	0.50	0.50	0.50	0.53	0.53	0.53	0.53	0.53	0.56	0.56	0.56	0.56	0.56	0.59	0.59	0.59	0.59	0.59
	47°F(8.3℃)	TC	10278	10292	10303	10304	10318	10898	10911	10921	10924	10937	11549	11564	11577	11579	11592	12245	12258	12271	12273	12288
		S/T	0.47	0.56	0.63	0.63	0.72	0.50	0.59	0.67	0.67	0.76	0.53	0.62	0.71	0.71	0.81	0.56	0.66	0.75	0.75	0.86
		PI	0.39	0.39	0.39	0.39	0.39	0.41	0.41	0.41	0.41	0.41	0.44	0.44	0.44	0.44	0.44	0.46	0.46	0.46	0.46	0.46
	50°F(10.0℃)	TC	10335	10349	10360	10361	10375	10958	10971	10982	10984	10997	11613	11628	11641	11643	11656	12312	12326	12339	12341	12356
		S/T	0.48	0.56	0.63	0.63	0.72	0.50	0.59	0.67	0.67	0.77	0.53	0.63	0.71	0.71	0.81	0.57	0.67	0.76	0.76	0.86
		PI	0.40	0.40	0.40	0.40	0.40	0.43	0.43	0.43	0.43	0.43	0.45	0.45	0.45	0.45	0.45	0.48	0.48	0.48	0.48	0.48
	59°F(15.0℃)	TC	10505	10519	10531	10531	10545	11138	11152	11163	11165	11178	11804	11819	11832	11835	11848	12515	12529	12542	12544	12560
		S/T	0.48	0.56	0.64	0.64	0.73	0.51	0.60	0.68	0.68	0.77	0.54	0.63	0.72	0.72	0.82	0.57	0.67	0.76	0.76	0.87
		PI	0.44	0.44	0.44	0.44	0.45	0.47	0.47	0.47	0.47	0.47	0.50	0.50	0.50	0.50	0.50	0.53	0.53	0.53	0.53	0.53
	68°F(20.0℃)	TC	10676	10690	10701	10702	10716	11319	11332	11343	11346	11359	11995	12011	12024	12026	12040	12718	12732	12746	12748	12763
		S/T	0.49	0.58	0.65	0.66	0.75	0.52	0.61	0.69	0.69	0.79	0.55	0.65	0.74	0.74	0.84	0.59	0.69	0.78	0.78	0.89
		PI	0.49	0.49	0.49	0.49	0.49	0.51	0.52	0.52	0.52	0.52	0.55	0.55	0.55	0.55	0.55	0.58	0.58	0.58	0.58	0.58
	77°F(25.0℃)	TC	10846	10860	10872	10873	10887	11499	11513	11524	11527	11540	12186	12202	12216	12218	12232	12921	12935	12949	12951	12967
		S/T	0.50	0.58	0.66	0.66	0.76	0.53	0.62	0.70	0.70	0.80	0.56	0.66	0.75	0.75	0.85	0.59	0.70	0.79	0.79	0.90
		PI	0.53	0.53	0.53	0.53	0.53	0.56	0.56	0.56	0.56	0.56	0.59	0.59	0.59	0.59	0.59	0.63	0.63	0.63	0.63	0.63
	82°F(27.8℃)	TC	10842	10856	10868	10868	10883	11495	11509	11520	11522	11536	12182	12198	12211	12213	12227	12916	12930	12944	12946	12962
		S/T	0.50	0.59	0.67	0.67	0.77	0.53	0.63	0.71	0.71	0.81	0.57	0.66	0.76	0.76	0.86	0.60	0.70	0.80	0.80	0.91
		PI	0.59	0.59	0.59	0.59	0.59	0.62	0.62	0.62	0.62	0.63	0.66	0.66	0.66	0.66	0.66	0.70	0.70	0.70	0.70	0.70
	86°F(30.0℃)	TC	10714	10728	10740	10740	10755	11359	11373	11384	11386	11400	12038	12054	12067	12069	12083	12763	12777	12791	12793	12809
		S/T	0.51	0.60	0.68	0.68	0.78	0.54	0.63	0.72	0.72	0.82	0.57	0.67	0.76	0.76	0.87	0.61	0.71	0.81	0.81	0.92
		PI	0.68	0.68	0.69	0.69	0.69	0.72	0.73	0.73	0.73	0.73	0.77	0.77	0.77	0.77	0.77	0.81	0.82	0.82	0.82	0.82
	95°F(35.0℃)	TC	10426	10440	10451	10452	10466	11054	11067	11078	11080	11094	11715	11730	11743	11745	11758	12421	12434	12448	12450	12465
		S/T	0.51	0.60	0.68	0.68	0.78	0.54	0.63	0.72	0.72	0.82	0.57	0.67	0.76	0.76	0.87	0.61	0.71	0.81	0.81	0.92
		PI	0.90	0.90	0.90	0.90	0.90	0.95	0.95	0.95	0.96	0.96	1.01	1.01	1.01	1.01	1.01	1.07	1.07	1.07	1.07	1.07
	104°F(40.0℃)	TC	9172	9184	9194	9195	9207	9725	9736	9746	9748	9759	10306	10319	10331	10332	10344	10927	10938	10950	10952	10966
		S/T	0.52	0.61	0.70	0.70	0.80	0.55	0.65	0.74	0.74	0.84	0.59	0.69	0.78	0.78	0.89	0.62	0.73	0.83	0.83	0.95
		PI	0.90	0.90	0.90	0.90	0.90	0.95	0.95	0.95	0.95	0.96	1.01	1.01	1.01	1.01	1.01	1.07	1.07	1.07	1.07	1.07

Manufacturer reserves the right to change, at any time, specifications and designs without notice and without obligations.

Table 8: Cooling Performance 12K (Continued)

AIRFLOW (CFM)	OUTDOOR DB °F (℃)	ID WB°F (℃)	60.8°F(16.0℃)					64.4°F(18.0℃)					67°F(19.4℃)					71.6°F(22.0℃)				
		ID DB°F (℃)	73.4°F (23.0℃)	77.0°F (25.0℃)	80.0°F (26.7℃)	80.6°F (27.0℃)	84.2°F (29.0℃)	73.4°F (23.0℃)	77.0°F (25.0℃)	80.0°F 26.7℃)	80.6°F (27.0℃)	84.2°F (29.0℃)	73.4°F (23.0℃)	77.0°F (25.0℃)	80.0°F (26.7℃)	80.6°F (27.0℃)	84.2°F (29.0℃)	73.4°F (23.0℃)	77.0°F(25.0℃)	80.0°F (26.7℃)	80.6°F (27.0℃)	84.2°F (29.0℃)
232	110°F(43.0℃)	TC	8420	8431	8440	8440	8452	8927	8937	8946	8948	8959	9460	9473	9483	9485	9495	10030	10041	10052	10054	10066
		S/T	0.54	0.64	0.72	0.72	0.82	0.57	0.67	0.77	0.77	0.87	0.61	0.71	0.81	0.81	0.93	0.65	0.76	0.86	0.86	0.98
		PI	0.90	0.90	0.90	0.90	0.90	0.95	0.95	0.95	0.95	0.95	1.01	1.01	1.01	1.01	1.01	1.07	1.07	1.07	1.07	1.07
	115°F(46.0℃)	TC	7251	7260	7268	7269	7278	7688	7697	7704	7706	7715	8147	8157	8167	8168	8177	8638	8647	8657	8658	8669
		S/T	0.55	0.64	0.73	0.73	0.83	0.58	0.68	0.78	0.78	0.88	0.62	0.72	0.82	0.82	0.94	0.65	0.77	0.87	0.87	0.99
		PI	0.83	0.83	0.83	0.83	0.83	0.88	0.88	0.88	0.88	0.88	0.93	0.93	0.94	0.94	0.94	0.99	0.99	0.99	0.99	0.99
	122°F(50.0℃)	TC	5692	5700	5706	5706	5714	6035	6042	6048	6049	6057	6396	6404	6411	6412	6420	6781	6788	6796	6797	6805
		S/T	0.56	0.66	0.75	0.75	0.85	0.60	0.70	0.79	0.79	0.90	0.63	0.74	0.84	0.84	0.96	0.67	0.78	0.89	0.89	1.00
		PI	0.74	0.74	0.74	0.74	0.74	0.79	0.79	0.79	0.79	0.79	0.83	0.83	0.84	0.84	0.84	0.88	0.88	0.89	0.89	0.89
329	5°F(-15.0℃)	TC	10745	10759	10771	10771	10786	11392	11406	11417	11419	11433	12073	12088	12102	12104	12118	12800	12814	12828	12830	12846
		S/T	0.47	0.56	0.63	0.63	0.72	0.50	0.59	0.67	0.67	0.77	0.53	0.63	0.71	0.71	0.81	0.57	0.66	0.75	0.75	0.86
		PI	0.50	0.50	0.50	0.50	0.50	0.53	0.53	0.53	0.53	0.53	0.56	0.56	0.56	0.56	0.56	0.59	0.59	0.59	0.59	0.60
	14°F(-10.0℃)	TC	11460	11475	11487	11488	11504	12150	12165	12177	12179	12194	12876	12893	12907	12910	12924	13652	13667	13682	13684	13701
		S/T	0.48	0.56	0.63	0.63	0.72	0.50	0.59	0.67	0.67	0.77	0.53	0.63	0.71	0.71	0.81	0.57	0.67	0.76	0.76	0.86
		PI	0.47	0.47	0.48	0.48	0.48	0.50	0.50	0.50	0.50	0.50	0.53	0.53	0.53	0.53	0.53	0.56	0.57	0.57	0.57	0.57
	17°F(-8.3℃)	TC	11698	11714	11726	11727	11743	12403	12418	12430	12433	12447	13144	13161	13176	13178	13193	13936	13951	13966	13969	13986
		S/T	0.48	0.56	0.64	0.64	0.73	0.51	0.59	0.67	0.67	0.77	0.54	0.63	0.72	0.72	0.82	0.57	0.67	0.76	0.76	0.86
		PI	0.47	0.47	0.47	0.47	0.47	0.49	0.49	0.49	0.50	0.50	0.52	0.52	0.52	0.52	0.53	0.55	0.56	0.56	0.56	0.56
	23°F(-5.0℃)	TC	11522	11538	11550	11551	11566	12217	12231	12243	12246	12260	12947	12964	12978	12980	12995	13727	13742	13757	13759	13776
		S/T	0.48	0.56	0.64	0.64	0.73	0.51	0.60	0.68	0.68	0.77	0.54	0.63	0.72	0.72	0.82	0.57	0.67	0.76	0.76	0.87
		PI	0.52	0.52	0.52	0.52	0.52	0.55	0.55	0.55	0.55	0.55	0.58	0.58	0.58	0.58	0.58	0.61	0.62	0.62	0.62	0.62
	35°F(1.7℃)	TC	11171	11186	11198	11199	11214	11844	11858	11870	11872	11886	12552	12568	12582	12584	12599	13308	13323	13337	13339	13356
		S/T	0.48	0.57	0.64	0.64	0.73	0.51	0.60	0.68	0.68	0.78	0.54	0.64	0.72	0.72	0.82	0.57	0.67	0.77	0.77	0.87
		PI	0.62	0.62	0.62	0.62	0.62	0.65	0.65	0.66	0.66	0.66	0.69	0.69	0.69	0.69	0.70	0.73	0.74	0.74	0.74	0.74
	41°F(5.0℃)	TC	10842	10857	10869	10869	10884	11496	11509	11521	11523	11537	12182	12198	12212	12214	12228	12916	12931	12945	12947	12963
		S/T	0.48	0.57	0.64	0.64	0.73	0.51	0.60	0.68	0.68	0.78	0.54	0.64	0.72	0.72	0.83	0.58	0.68	0.77	0.77	0.87
		PI	0.51	0.51	0.51	0.51	0.51	0.54	0.54	0.54	0.54	0.54	0.57	0.57	0.57	0.57	0.57	0.60	0.60	0.60	0.60	0.61
	47°F(8.3℃)	TC	10514	10528	10539	10539	10554	11147	11160	11171	11174	11187	11813	11828	11842	11844	11857	12525	12538	12552	12554	12570
		S/T	0.48	0.57	0.65	0.65	0.74	0.51	0.60	0.68	0.68	0.78	0.54	0.64	0.73	0.73	0.83	0.58	0.68	0.77	0.77	0.88
		PI	0.40	0.40	0.40	0.40	0.40	0.42	0.42	0.42	0.42	0.42	0.45	0.45	0.45	0.45	0.45	0.47	0.47	0.47	0.47	0.47
	50°F(10.0℃)	TC	10572	10586	10597	10598	10612	11209	11222	11233	11235	11249	11878	11894	11907	11909	11922	12594	12608	12621	12623	12639
		S/T	0.49	0.57	0.65	0.65	0.74	0.52	0.61	0.69	0.69	0.78	0.55	0.64	0.73	0.73	0.83	0.58	0.68	0.77	0.77	0.88
		PI	0.41	0.41	0.41	0.41	0.41	0.44	0.44	0.44	0.44	0.44	0.46	0.46	0.46	0.46	0.46	0.49	0.49	0.49	0.49	0.49

Manufacturer reserves the right to change, at any time, specifications and designs without notice and without obligations.

Table 8: Cooling Performance 12K (Continued)

AIRFLOW (CFM)	OUTDOOR DB °F (℃)	ID WB°F (℃)	60.8°F(16.0℃)					64.4°F(18.0℃)					67°F(19.4℃)					71.6°F(22.0℃)				
		ID DB°F (℃)	73.4°F (23.0℃)	77.0°F (25.0℃)	80.0°F (26.7℃)	80.6°F (27.0℃)	84.2°F (29.0℃)	73.4°F (23.0℃)	77.0°F (25.0℃)	80.0°F 26.7℃)	80.6°F (27.0℃)	84.2°F (29.0℃)	73.4°F (23.0℃)	77.0°F (25.0℃)	80.0°F (26.7℃)	80.6°F (27.0℃)	84.2°F (29.0℃)	73.4°F (23.0℃)	77.0°F(25.0℃)	80.0°F (26.7℃)	80.6°F (27.0℃)	84.2°F (29.0℃)
329	59°F(15.0℃)	TC	10746	10760	10772	10772	10787	11393	11407	11418	11420	11434	12074	12090	12103	12105	12119	12801	12815	12829	12831	12847
		S/T	0.49	0.57	0.65	0.65	0.74	0.52	0.61	0.69	0.69	0.79	0.55	0.65	0.73	0.73	0.84	0.58	0.68	0.78	0.78	0.89
		PI	0.45	0.45	0.45	0.45	0.46	0.48	0.48	0.48	0.48	0.48	0.51	0.51	0.51	0.51	0.51	0.54	0.54	0.54	0.54	0.54
	68°F(20.0℃)	TC	10920	10935	10946	10947	10962	11578	11592	11603	11605	11619	12270	12286	12299	12302	12315	13009	13023	13037	13039	13056
		S/T	0.50	0.59	0.67	0.67	0.76	0.53	0.62	0.71	0.71	0.81	0.56	0.66	0.75	0.75	0.86	0.60	0.70	0.80	0.80	0.91
		PI	0.50	0.50	0.50	0.50	0.50	0.53	0.53	0.53	0.53	0.53	0.56	0.56	0.56	0.56	0.56	0.59	0.59	0.59	0.59	0.59
	77°F(25.0℃)	TC	11094	11109	11121	11121	11136	11763	11777	11788	11790	11804	12465	12482	12495	12498	12512	13216	13231	13245	13247	13264
		S/T	0.51	0.60	0.68	0.68	0.77	0.54	0.63	0.72	0.72	0.82	0.57	0.67	0.76	0.76	0.87	0.61	0.71	0.81	0.81	0.92
		PI	0.54	0.54	0.54	0.54	0.54	0.57	0.57	0.57	0.57	0.57	0.61	0.61	0.61	0.61	0.61	0.64	0.64	0.64	0.64	0.64
	82°F(27.8℃)	TC	11090	11105	11117	11117	11132	11758	11772	11784	11786	11800	12461	12477	12491	12493	12507	13211	13226	13240	13242	13259
		S/T	0.52	0.60	0.69	0.69	0.78	0.55	0.64	0.73	0.73	0.83	0.58	0.68	0.77	0.77	0.88	0.61	0.72	0.82	0.82	0.93
		PI	0.60	0.60	0.60	0.60	0.60	0.64	0.64	0.64	0.64	0.64	0.68	0.68	0.68	0.68	0.68	0.72	0.72	0.72	0.72	0.72
	86°F(30.0℃)	TC	10959	10974	10985	10986	11001	11619	11633	11645	11647	11661	12314	12330	12343	12346	12359	13055	13070	13084	13086	13102
		S/T	0.52	0.61	0.70	0.70	0.79	0.55	0.65	0.74	0.74	0.84	0.59	0.69	0.78	0.78	0.89	0.62	0.73	0.83	0.83	0.95
		PI	0.70	0.70	0.70	0.70	0.70	0.74	0.74	0.74	0.74	0.74	0.79	0.79	0.79	0.79	0.79	0.83	0.83	0.83	0.83	0.84
	95°F(35.0℃)	TC	10665	10679	10690	10691	10705	11307	11321	11332	11334	11348	11983	11998	12012	12014	12027	12705	12719	12732	12734	12750
		S/T	0.52	0.61	0.70	0.70	0.79	0.55	0.65	0.74	0.74	0.84	0.59	0.69	0.78	0.78	0.89	0.62	0.73	0.83	0.83	0.95
		PI	0.92	0.92	0.92	0.92	0.92	0.97	0.98	0.98	0.98	0.98	1.03	1.03	1.04	1.04	1.04	1.10	1.10	1.10	1.10	1.10
	104°F(40.0℃)	TC	9382	9394	9405	9405	9418	9947	9959	9969	9971	9983	10542	10555	10567	10569	10581	11177	11189	11201	11203	11217
		S/T	0.54	0.63	0.71	0.71	0.81	0.57	0.67	0.76	0.76	0.86	0.60	0.71	0.80	0.80	0.91	0.64	0.75	0.85	0.85	0.97
		PI	0.92	0.92	0.92	0.92	0.92	0.97	0.97	0.98	0.98	0.98	1.03	1.03	1.03	1.03	1.04	1.09	1.10	1.10	1.10	1.10
	110°F(43.0℃)	TC	8612	8624	8633	8633	8645	9131	9142	9151	9153	9164	9677	9689	9700	9702	9713	10260	10271	10282	10284	10297
		S/T	0.55	0.65	0.74	0.74	0.84	0.59	0.69	0.78	0.78	0.89	0.62	0.73	0.83	0.83	0.95	0.66	0.78	0.88	0.88	1.00
		PI	0.92	0.92	0.92	0.92	0.92	0.97	0.97	0.98	0.98	0.98	1.03	1.03	1.03	1.03	1.04	1.09	1.09	1.10	1.10	1.10
	115°F(46.0℃)	TC	7417	7427	7435	7435	7445	7864	7873	7881	7882	7892	8333	8344	8353	8355	8364	8835	8845	8855	8856	8867
		S/T	0.56	0.66	0.75	0.75	0.85	0.59	0.70	0.79	0.79	0.90	0.63	0.74	0.84	0.84	0.96	0.67	0.78	0.89	0.89	1.00
		PI	0.85	0.85	0.85	0.85	0.85	0.90	0.90	0.90	0.90	0.90	0.95	0.96	0.96	0.96	0.96	1.01	1.01	1.01	1.01	1.02
	122°F(50.0℃)	TC	5822	5830	5837	5837	5845	6173	6181	6187	6188	6195	6542	6551	6558	6559	6566	6936	6944	6951	6952	6961
		S/T	0.57	0.67	0.77	0.77	0.87	0.61	0.71	0.81	0.81	0.93	0.65	0.76	0.86	0.86	0.98	0.68	0.80	0.91	0.91	1.00
		PI	0.76	0.76	0.76	0.76	0.76	0.80	0.81	0.81	0.81	0.81	0.85	0.85	0.85	0.85	0.86	0.90	0.90	0.91	0.91	0.91
347	5°F(-15.0℃)	TC	10990	11005	11017	11018	11032	11653	11667	11678	11680	11694	12349	12365	12379	12381	12395	13093	13107	13121	13124	13140
		S/T	0.49	0.57	0.65	0.65	0.74	0.51	0.60	0.69	0.69	0.78	0.55	0.64	0.73	0.73	0.83	0.58	0.68	0.77	0.77	0.88
		PI	0.51	0.51	0.51	0.51	0.51	0.54	0.54	0.54	0.54	0.54	0.57	0.57	0.57	0.57	0.57	0.61	0.61	0.61	0.61	0.61

Manufacturer reserves the right to change, at any time, specifications and designs without notice and without obligations.

Table 8: Cooling Performance 12K (Continued)

AIRFLOW (CFM)	OUTDOOR DB °F (℃)	ID WB°F (℃)	60.8°F(16.0℃)					64.4°F(18.0℃)					67°F(19.4℃)					71.6°F(22.0℃)				
		ID DB°F (℃)	73.4°F (23.0℃)	77.0°F (25.0℃)	80.0°F (26.7℃)	80.6°F (27.0℃)	84.2°F (29.0℃)	73.4°F (23.0℃)	77.0°F (25.0℃)	80.0°F 26.7℃)	80.6°F (27.0℃)	84.2°F (29.0℃)	73.4°F (23.0℃)	77.0°F (25.0℃)	80.0°F (26.7℃)	80.6°F (27.0℃)	84.2°F (29.0℃)	73.4°F (23.0℃)	77.0°F(25.0℃)	80.0°F (26.7℃)	80.6°F (27.0℃)	84.2°F (29.0℃)
347	14°F(-10.0℃)	TC	11722	11738	11750	11751	11767	12428	12443	12455	12458	12473	13171	13188	13203	13205	13220	13965	13980	13995	13997	14015
		S/T	0.49	0.57	0.65	0.65	0.74	0.52	0.61	0.69	0.69	0.78	0.55	0.64	0.73	0.73	0.83	0.58	0.68	0.77	0.77	0.88
		PI	0.48	0.49	0.49	0.49	0.49	0.51	0.51	0.52	0.52	0.52	0.54	0.55	0.55	0.55	0.55	0.58	0.58	0.58	0.58	0.58
	17°F(-8.3℃)	TC	11966	11982	11995	11995	12012	12687	12702	12715	12717	12732	13445	13462	13477	13480	13495	14255	14271	14286	14288	14306
		S/T	0.49	0.57	0.65	0.65	0.74	0.52	0.61	0.69	0.69	0.79	0.55	0.64	0.73	0.73	0.83	0.58	0.68	0.78	0.78	0.88
		PI	0.48	0.48	0.48	0.48	0.48	0.51	0.51	0.51	0.51	0.51	0.54	0.54	0.54	0.54	0.54	0.57	0.57	0.57	0.57	0.57
	23°F(-5.0℃)	TC	11786	11802	11815	11815	11831	12496	12511	12524	12526	12541	13243	13260	13275	13277	13292	14041	14056	14071	14074	14091
		S/T	0.49	0.58	0.65	0.65	0.75	0.52	0.61	0.69	0.69	0.79	0.55	0.65	0.74	0.74	0.84	0.58	0.69	0.78	0.78	0.89
		PI	0.53	0.53	0.53	0.53	0.53	0.56	0.56	0.56	0.56	0.56	0.59	0.59	0.59	0.59	0.60	0.63	0.63	0.63	0.63	0.63
	35°F(1.7℃)	TC	11427	11442	11454	11455	11470	12115	12130	12142	12144	12158	12839	12856	12870	12872	12887	13613	13627	13642	13644	13661
		S/T	0.49	0.58	0.66	0.66	0.75	0.52	0.61	0.70	0.70	0.79	0.55	0.65	0.74	0.74	0.84	0.59	0.69	0.78	0.78	0.89
		PI	0.63	0.63	0.63	0.63	0.63	0.67	0.67	0.67	0.67	0.67	0.71	0.71	0.71	0.71	0.71	0.75	0.75	0.75	0.75	0.75
	41°F(5.0℃)	TC	11090	11105	11117	11118	11133	11759	11773	11784	11787	11801	12461	12477	12491	12494	12508	13212	13226	13241	13243	13259
		S/T	0.49	0.58	0.66	0.66	0.75	0.52	0.61	0.70	0.70	0.80	0.56	0.65	0.74	0.74	0.84	0.59	0.69	0.78	0.78	0.89
		PI	0.52	0.52	0.52	0.52	0.52	0.55	0.55	0.55	0.55	0.55	0.58	0.58	0.58	0.58	0.58	0.62	0.62	0.62	0.62	0.62
	47°F(8.3℃)	TC	10754	10769	10780	10781	10795	11402	11416	11427	11429	11443	12083	12099	12113	12115	12128	12811	12825	12839	12841	12857
		S/T	0.50	0.58	0.66	0.66	0.75	0.53	0.62	0.70	0.70	0.80	0.56	0.65	0.74	0.74	0.85	0.59	0.69	0.79	0.79	0.90
		PI	0.41	0.41	0.41	0.41	0.41	0.43	0.43	0.43	0.43	0.43	0.46	0.46	0.46	0.46	0.46	0.48	0.48	0.48	0.48	0.48
	50°F(10.0℃)	TC	10813	10828	10840	10840	10855	11465	11479	11490	11492	11506	12150	12166	12179	12182	12195	12882	12896	12910	12912	12928
		S/T	0.50	0.58	0.66	0.66	0.76	0.53	0.62	0.70	0.70	0.80	0.56	0.66	0.75	0.75	0.85	0.59	0.70	0.79	0.79	0.90
		PI	0.42	0.42	0.42	0.42	0.42	0.45	0.45	0.45	0.45	0.45	0.47	0.47	0.47	0.47	0.47	0.50	0.50	0.50	0.50	0.50
	59°F(15.0℃)	TC	10992	11006	11018	11019	11034	11654	11668	11679	11682	11696	12350	12366	12380	12382	12396	13094	13109	13123	13125	13141
		S/T	0.50	0.59	0.67	0.67	0.76	0.53	0.62	0.71	0.71	0.81	0.56	0.66	0.75	0.75	0.86	0.60	0.70	0.80	0.80	0.91
		PI	0.46	0.46	0.47	0.47	0.47	0.49	0.49	0.49	0.49	0.49	0.52	0.52	0.52	0.52	0.52	0.55	0.55	0.55	0.55	0.55
	68°F(20.0℃)	TC	11170	11185	11197	11197	11212	11843	11857	11869	11871	11885	12550	12567	12581	12583	12597	13307	13321	13336	13338	13354
		S/T	0.51	0.60	0.69	0.69	0.78	0.54	0.64	0.73	0.73	0.83	0.58	0.68	0.77	0.77	0.88	0.61	0.72	0.82	0.82	0.93
		PI	0.51	0.51	0.51	0.51	0.51	0.54	0.54	0.54	0.54	0.54	0.57	0.57	0.57	0.57	0.57	0.61	0.61	0.61	0.61	0.61
	77°F(25.0℃)	TC	11348	11363	11375	11376	11391	12032	12046	12058	12060	12075	12751	12767	12781	12784	12798	13519	13534	13548	13550	13567
		S/T	0.52	0.61	0.69	0.69	0.79	0.55	0.65	0.74	0.74	0.84	0.59	0.69	0.78	0.78	0.89	0.62	0.73	0.83	0.83	0.94
		PI	0.55	0.55	0.55	0.55	0.55	0.59	0.59	0.59	0.59	0.59	0.62	0.62	0.62	0.62	0.62	0.66	0.66	0.66	0.66	0.66
	82°F(27.8℃)	TC	11344	11359	11371	11372	11387	12027	12041	12053	12056	12070	12746	12762	12776	12779	12793	13514	13528	13543	13545	13562
		S/T	0.53	0.62	0.70	0.70	0.80	0.56	0.66	0.75	0.75	0.85	0.59	0.70	0.79	0.79	0.90	0.63	0.74	0.84	0.84	0.95
		PI	0.62	0.62	0.62	0.62	0.62	0.65	0.65	0.65	0.65	0.65	0.69	0.69	0.69	0.69	0.69	0.73	0.73	0.73	0.73	0.74

Manufacturer reserves the right to change, at any time, specifications and designs without notice and without obligations.

Table 8: Cooling Performance 12K (Continued)

AIRFLOW (CFM)	OUTDOOR DB °F (℃)	ID WB°F (℃)	60.8°F(16.0℃)					64.4°F(18.0℃)					67°F(19.4℃)					71.6°F(22.0℃)				
		ID DB°F (℃)	73.4°F (23.0℃)	77.0°F (25.0℃)	80.0°F (26.7℃)	80.6°F (27.0℃)	84.2°F (29.0℃)	73.4°F (23.0℃)	77.0°F (25.0℃)	80.0°F 26.7℃)	80.6°F (27.0℃)	84.2°F (29.0℃)	73.4°F (23.0℃)	77.0°F (25.0℃)	80.0°F (26.7℃)	80.6°F (27.0℃)	84.2°F (29.0℃)	73.4°F (23.0℃)	77.0°F(25.0℃)	80.0°F (26.7℃)	80.6°F (27.0℃)	84.2°F (29.0℃)
347	86°F(30.0℃)	TC	11210	11225	11237	11237	11253	11885	11899	11911	11913	11928	12595	12612	12626	12628	12642	13354	13369	13383	13385	13402
		S/T	0.53	0.63	0.71	0.71	0.81	0.57	0.66	0.75	0.75	0.86	0.60	0.70	0.80	0.80	0.91	0.64	0.75	0.85	0.85	0.97
		PI	0.72	0.72	0.72	0.72	0.72	0.76	0.76	0.76	0.76	0.76	0.80	0.80	0.81	0.81	0.81	0.85	0.85	0.85	0.85	0.86
	95°F(35.0℃)	TC	10909	10923	10935	10936	10950	11566	11580	11591	11593	11607	12257	12273	12287	12289	12303	12996	13010	13024	13026	13042
		S/T	0.53	0.63	0.71	0.71	0.81	0.57	0.66	0.75	0.75	0.86	0.60	0.70	0.80	0.80	0.91	0.64	0.75	0.85	0.85	0.97
		PI	0.94	0.94	0.94	0.94	0.94	1.00	1.00	1.00	1.00	1.00	1.06	1.06	1.06	1.06	1.06	1.12	1.12	1.12	1.12	1.12
	104°F(40.0℃)	TC	9597	9609	9620	9620	9633	10175	10187	10197	10199	10211	10783	10797	10809	10811	10823	11432	11445	11457	11459	11473
		S/T	0.55	0.64	0.73	0.73	0.83	0.58	0.68	0.77	0.77	0.88	0.62	0.72	0.82	0.82	0.93	0.65	0.76	0.87	0.87	0.99
		PI	0.94	0.94	0.94	0.94	0.94	1.00	1.00	1.00	1.00	1.00	1.06	1.06	1.06	1.06	1.06	1.12	1.12	1.12	1.12	1.12
	110°F(43.0℃)	TC	8809	8821	8831	8831	8843	9340	9351	9360	9362	9373	9898	9911	9922	9924	9935	10495	10506	10517	10519	10532
		S/T	0.57	0.67	0.76	0.76	0.86	0.60	0.71	0.80	0.80	0.91	0.64	0.75	0.85	0.85	0.97	0.68	0.79	0.90	0.90	1.00
		PI	0.94	0.94	0.94	0.94	0.94	1.00	1.00	1.00	1.00	1.00	1.05	1.06	1.06	1.06	1.06	1.12	1.12	1.12	1.12	1.12
	115°F(46.0℃)	TC	7586	7597	7605	7605	7615	8043	8053	8061	8063	8072	8524	8535	8545	8546	8556	9038	9047	9057	9059	9070
		S/T	0.57	0.67	0.77	0.77	0.87	0.61	0.71	0.81	0.81	0.92	0.65	0.76	0.86	0.86	0.98	0.68	0.80	0.91	0.91	1.00
		PI	0.87	0.87	0.87	0.87	0.87	0.92	0.92	0.92	0.92	0.92	0.98	0.98	0.98	0.98	0.98	1.04	1.04	1.04	1.04	1.04
	122°F(50.0℃)	TC	5956	5964	5970	5970	5978	6315	6322	6328	6330	6337	6692	6701	6708	6709	6717	7095	7103	7110	7112	7120
		S/T	0.59	0.69	0.78	0.78	0.89	0.62	0.73	0.83	0.83	0.95	0.66	0.77	0.88	0.88	1.00	0.70	0.82	0.93	0.93	1.00
		PI	0.78	0.78	0.78	0.78	0.78	0.82	0.82	0.82	0.82	0.83	0.87	0.87	0.87	0.87	0.87	0.92	0.93	0.93	0.93	0.93

LEGEND

TC: Total Cooling Capacity (BTU/hr)
S/T: Sensible Cooling Capacity Ratio
PI: Power Input (kW)

Manufacturer reserves the right to change, at any time, specifications and designs without notice and without obligations.

Table 9: Cooling Performance 18K

AIRFLOW (CFM)	OUTDOOR DB °F (℃)	ID WB°F (℃)	60.8°F(16.0℃)					64.4°F(18.0℃)					67°F(19.4℃)					71.6°F(22.0℃)				
		ID DB°F (℃)	73.4°F (23.0℃)	77.0°F (25.0℃)	80.0°F (26.7℃)	80.6°F (27.0℃)	84.2°F (29.0℃)	73.4°F (23.0℃)	77.0°F (25.0℃)	80.0°F 26.7℃)	80.6°F (27.0℃)	84.2°F (29.0℃)	73.4°F (23.0℃)	77.0°F (25.0℃)	80.0°F (26.7℃)	80.6°F (27.0℃)	84.2°F (29.0℃)	73.4°F (23.0℃)	77.0°F(25.0℃)	80.0°F (26.7℃)	80.6°F (27.0℃)	84.2°F (29.0℃)
306	5°F(-15.0℃)	TC	15228	15249	15265	15266	15287	16146	16165	16181	16184	16204	17111	17133	17152	17155	17174	18142	18161	18181	18184	18207
		S/T	0.44	0.52	0.59	0.59	0.67	0.47	0.55	0.63	0.63	0.71	0.50	0.58	0.66	0.66	0.76	0.53	0.62	0.70	0.70	0.80
		PI	0.89	0.89	0.89	0.89	0.89	0.94	0.95	0.95	0.95	0.95	1.00	1.00	1.00	1.00	1.00	1.06	1.06	1.06	1.06	1.06
	14°F(-10.0℃)	TC	15576	15597	15614	15615	15636	16515	16534	16551	16554	16574	17501	17524	17544	17547	17567	18556	18576	18596	18599	18622
		S/T	0.44	0.52	0.59	0.59	0.67	0.47	0.55	0.63	0.63	0.71	0.50	0.58	0.66	0.66	0.76	0.53	0.62	0.70	0.70	0.80
		PI	0.88	0.88	0.88	0.88	0.88	0.93	0.93	0.93	0.93	0.94	0.99	0.99	0.99	0.99	0.99	1.05	1.05	1.05	1.05	1.05
	17°F(-8.3℃)	TC	15692	15713	15730	15731	15752	16638	16657	16674	16677	16697	17632	17655	17674	17678	17697	18694	18714	18735	18738	18761
		S/T	0.44	0.52	0.59	0.59	0.68	0.47	0.55	0.63	0.63	0.72	0.50	0.59	0.67	0.67	0.76	0.53	0.62	0.71	0.71	0.81
		PI	0.88	0.88	0.88	0.88	0.88	0.93	0.93	0.93	0.93	0.93	0.98	0.99	0.99	0.99	0.99	1.04	1.04	1.05	1.05	1.05
	23°F(-5.0℃)	TC	16260	16282	16300	16301	16323	17240	17261	17278	17281	17302	18270	18294	18315	18318	18338	19371	19392	19413	19416	19441
		S/T	0.45	0.52	0.60	0.60	0.68	0.47	0.56	0.63	0.63	0.72	0.50	0.59	0.67	0.67	0.76	0.53	0.62	0.71	0.71	0.81
		PI	0.84	0.84	0.84	0.84	0.84	0.89	0.89	0.89	0.89	0.89	0.94	0.94	0.94	0.94	0.95	1.00	1.00	1.00	1.00	1.00
	35°F(1.7℃)	TC	17398	17421	17440	17440	17464	18446	18468	18486	18490	18512	19548	19573	19595	19599	19621	20726	20748	20771	20774	20800
		S/T	0.45	0.53	0.60	0.60	0.68	0.48	0.56	0.63	0.64	0.72	0.50	0.59	0.67	0.67	0.77	0.54	0.63	0.71	0.71	0.81
		PI	0.76	0.77	0.77	0.77	0.77	0.81	0.81	0.81	0.81	0.81	0.86	0.86	0.86	0.86	0.86	0.91	0.91	0.91	0.91	0.91
	41°F(5.0℃)	TC	15499	15520	15536	15537	15558	16433	16452	16469	16472	16491	17415	17437	17457	17460	17479	18464	18484	18504	18507	18530
		S/T	0.45	0.53	0.60	0.60	0.68	0.48	0.56	0.64	0.64	0.73	0.51	0.59	0.67	0.67	0.77	0.54	0.63	0.71	0.71	0.81
		PI	0.68	0.68	0.68	0.68	0.68	0.72	0.72	0.72	0.72	0.72	0.76	0.77	0.77	0.77	0.77	0.81	0.81	0.81	0.81	0.81
	47°F(8.3℃)	TC	13600	13618	13633	13634	13652	14420	14437	14451	14454	14471	15281	15301	15318	15321	15338	16202	16220	16237	16240	16260
		S/T	0.45	0.53	0.60	0.60	0.69	0.48	0.56	0.64	0.64	0.73	0.51	0.60	0.68	0.68	0.77	0.54	0.63	0.72	0.72	0.82
		PI	0.60	0.60	0.60	0.60	0.60	0.63	0.63	0.63	0.63	0.63	0.67	0.67	0.67	0.67	0.67	0.71	0.71	0.71	0.71	0.71
	50°F(10.0℃)	TC	13740	13758	13773	13774	13792	14568	14585	14600	14602	14620	15438	15458	15475	15478	15496	16368	16386	16404	16407	16427
		S/T	0.45	0.53	0.61	0.61	0.69	0.48	0.56	0.64	0.64	0.73	0.51	0.60	0.68	0.68	0.78	0.54	0.63	0.72	0.72	0.82
		PI	0.61	0.61	0.61	0.61	0.61	0.64	0.64	0.65	0.65	0.65	0.68	0.68	0.68	0.68	0.68	0.72	0.72	0.72	0.73	0.73
	59°F(15.0℃)	TC	14159	14178	14193	14194	14213	15012	15030	15045	15048	15066	15909	15930	15948	15951	15968	16868	16886	16905	16907	16928
		S/T	0.46	0.54	0.61	0.61	0.69	0.48	0.57	0.64	0.64	0.73	0.51	0.60	0.68	0.68	0.78	0.54	0.64	0.72	0.72	0.83
		PI	0.64	0.64	0.64	0.64	0.64	0.68	0.68	0.68	0.68	0.68	0.72	0.72	0.72	0.72	0.72	0.76	0.76	0.76	0.76	0.77
	68°F(20.0℃)	TC	14578	14598	14614	14614	14634	15457	15475	15490	15493	15512	16380	16402	16420	16423	16441	17367	17386	17405	17408	17429
		S/T	0.47	0.55	0.62	0.62	0.71	0.50	0.58	0.66	0.66	0.75	0.53	0.62	0.70	0.70	0.80	0.56	0.65	0.74	0.74	0.85
		PI	0.67	0.67	0.68	0.68	0.68	0.71	0.72	0.72	0.72	0.72	0.76	0.76	0.76	0.76	0.76	0.80	0.80	0.80	0.80	0.81
	77°F(25.0℃)	TC	14997	15018	15034	15035	15055	15901	15920	15936	15939	15958	16851	16873	16892	16895	16914	17867	17886	17906	17908	17931
		S/T	0.47	0.56	0.63	0.63	0.72	0.50	0.59	0.67	0.67	0.76	0.53	0.63	0.71	0.71	0.81	0.56	0.66	0.75	0.75	0.86
		PI	0.71	0.71	0.71	0.71	0.71	0.75	0.75	0.75	0.75	0.75	0.79	0.80	0.80	0.80	0.80	0.84	0.84	0.84	0.84	0.85

Manufacturer reserves the right to change, at any time, specifications and designs without notice and without obligations.

Table 9: Cooling Performance 18K (Continued)

AIRFLOW (CFM)	OUTDOOR DB °F (°C)	ID WB°F (°C)	60.8°F(16.0°C)					64.4°F(18.0°C)					67°F(19.4°C)					71.6°F(22.0°C)				
		ID DB°F (°C)	73.4°F (23.0°C)	77.0°F (25.0°C)	80.0°F (26.7°C)	80.6°F (27.0°C)	84.2°F (29.0°C)	73.4°F (23.0°C)	77.0°F (25.0°C)	80.0°F 26.7°C)	80.6°F (27.0°C)	84.2°F (29.0°C)	73.4°F (23.0°C)	77.0°F (25.0°C)	80.0°F (26.7°C)	80.6°F (27.0°C)	84.2°F (29.0°C)	73.4°F (23.0°C)	77.0°F(25.0°C)	80.0°F (26.7°C)	80.6°F (27.0°C)	84.2°F (29.0°C)
306	82°F(27.8°C)	TC	15106	15126	15142	15143	15163	16016	16035	16051	16054	16073	16973	16995	17014	17017	17036	17996	18015	18035	18038	18060
		S/T	0.48	0.56	0.64	0.64	0.73	0.51	0.60	0.68	0.68	0.77	0.54	0.63	0.72	0.72	0.82	0.57	0.67	0.76	0.76	0.87
		PI	0.79	0.79	0.80	0.80	0.80	0.84	0.84	0.84	0.84	0.84	0.89	0.89	0.89	0.89	0.89	0.95	0.95	0.95	0.95	0.95
	86°F(30.0°C)	TC	15035	15055	15071	15072	15092	15941	15960	15976	15979	15998	16893	16915	16934	16937	16956	17911	17931	17950	17953	17975
		S/T	0.49	0.57	0.65	0.65	0.74	0.52	0.61	0.69	0.69	0.78	0.55	0.64	0.73	0.73	0.83	0.58	0.68	0.77	0.77	0.88
		PI	0.95	0.95	0.95	0.95	0.95	1.01	1.01	1.01	1.01	1.01	1.07	1.07	1.07	1.07	1.07	1.13	1.13	1.13	1.13	1.13
	95°F(35.0°C)	TC	14876	14896	14912	14912	14932	15772	15791	15806	15810	15828	16714	16736	16755	16758	16777	17721	17741	17760	17763	17785
		S/T	0.49	0.57	0.65	0.65	0.74	0.52	0.61	0.69	0.69	0.78	0.55	0.64	0.73	0.73	0.83	0.58	0.68	0.77	0.77	0.88
		PI	1.30	1.30	1.30	1.30	1.30	1.38	1.38	1.38	1.38	1.38	1.46	1.46	1.46	1.46	1.46	1.55	1.55	1.55	1.55	1.55
	104°F(40.0°C)	TC	13078	13096	13110	13110	13128	13866	13883	13896	13899	13916	14695	14714	14730	14733	14749	15580	15597	15614	15616	15636
		S/T	0.50	0.59	0.66	0.66	0.76	0.53	0.62	0.70	0.70	0.80	0.56	0.66	0.75	0.75	0.85	0.59	0.70	0.79	0.79	0.90
		PI	1.27	1.27	1.28	1.28	1.28	1.35	1.35	1.35	1.35	1.35	1.43	1.43	1.43	1.43	1.44	1.52	1.52	1.52	1.52	1.52
	110°F(43.0°C)	TC	11999	12016	12029	12029	12045	12723	12738	12750	12753	12768	13483	13500	13515	13518	13533	14295	14311	14326	14328	14346
		S/T	0.52	0.61	0.69	0.69	0.79	0.55	0.64	0.73	0.73	0.83	0.58	0.68	0.77	0.77	0.88	0.62	0.72	0.82	0.82	0.94
		PI	1.26	1.26	1.26	1.26	1.26	1.33	1.34	1.34	1.34	1.34	1.41	1.42	1.42	1.42	1.42	1.50	1.50	1.50	1.50	1.50
	115°F(46.0°C)	TC	9658	9671	9681	9681	9694	10240	10252	10262	10264	10276	10851	10865	10878	10880	10892	11505	11518	11530	11532	11546
		S/T	0.52	0.61	0.70	0.70	0.79	0.55	0.65	0.74	0.74	0.84	0.59	0.69	0.78	0.78	0.89	0.62	0.73	0.83	0.83	0.95
		PI	1.05	1.05	1.06	1.06	1.06	1.12	1.12	1.12	1.12	1.12	1.18	1.19	1.19	1.19	1.19	1.26	1.26	1.26	1.26	1.26
	122°F(50.0°C)	TC	6535	6544	6551	6551	6560	6929	6937	6944	6945	6954	7343	7352	7361	7362	7370	7785	7794	7802	7803	7813
		S/T	0.54	0.63	0.71	0.71	0.81	0.57	0.67	0.76	0.76	0.86	0.60	0.71	0.80	0.80	0.91	0.64	0.75	0.85	0.85	0.97
		PI	0.78	0.78	0.78	0.78	0.78	0.83	0.83	0.83	0.83	0.83	0.88	0.88	0.88	0.88	0.88	0.93	0.93	0.93	0.93	0.93
353	5°F(-15.0°C)	TC	15709	15730	15747	15748	15769	16656	16675	16692	16695	16715	17651	17674	17693	17697	17716	18714	18734	18755	18758	18781
		S/T	0.46	0.54	0.61	0.61	0.69	0.48	0.57	0.65	0.65	0.74	0.51	0.60	0.68	0.68	0.78	0.54	0.64	0.72	0.73	0.83
		PI	0.92	0.92	0.92	0.92	0.92	0.97	0.98	0.98	0.98	0.98	1.03	1.03	1.03	1.03	1.04	1.09	1.10	1.10	1.10	1.10
	14°F(-10.0°C)	TC	16068	16089	16106	16107	16129	17036	17056	17073	17076	17097	18054	18077	18097	18101	18121	19141	19162	19183	19186	19210
		S/T	0.46	0.54	0.61	0.61	0.70	0.48	0.57	0.65	0.65	0.74	0.51	0.60	0.69	0.69	0.78	0.54	0.64	0.73	0.73	0.83
		PI	0.91	0.91	0.91	0.91	0.91	0.96	0.96	0.96	0.96	0.97	1.02	1.02	1.02	1.02	1.02	1.08	1.08	1.08	1.08	1.08
	17°F(-8.3°C)	TC	16187	16209	16226	16227	16249	17163	17183	17200	17203	17224	18188	18212	18232	18235	18256	19284	19305	19326	19329	19353
		S/T	0.46	0.54	0.61	0.61	0.70	0.49	0.57	0.65	0.65	0.74	0.52	0.60	0.69	0.69	0.78	0.55	0.64	0.73	0.73	0.83
		PI	0.90	0.90	0.91	0.91	0.91	0.96	0.96	0.96	0.96	0.96	1.02	1.02	1.02	1.02	1.02	1.08	1.08	1.08	1.08	1.08
	23°F(-5.0°C)	TC	16774	16796	16814	16815	16838	17784	17805	17823	17827	17848	18847	18871	18892	18896	18917	19983	20004	20026	20029	20054
		S/T	0.46	0.54	0.61	0.61	0.70	0.49	0.57	0.65	0.65	0.74	0.52	0.61	0.69	0.69	0.79	0.55	0.64	0.73	0.73	0.83
		PI	0.87	0.87	0.87	0.87	0.87	0.92	0.92	0.92	0.92	0.92	0.97	0.97	0.97	0.97	0.98	1.03	1.03	1.03	1.03	1.03

Manufacturer reserves the right to change, at any time, specifications and designs without notice and without obligations.

Table 9: Cooling Performance 18K (Continued)

AIRFLOW (CFM)	OUTDOOR DB °F (℃)	ID WB°F (℃)	60.8°F(16.0℃)					64.4°F(18.0℃)					67°F(19.4℃)					71.6°F(22.0℃)				
		ID DB°F (℃)	73.4°F (23.0℃)	77.0°F (25.0℃)	80.0°F (26.7℃)	80.6°F (27.0℃)	84.2°F (29.0℃)	73.4°F (23.0℃)	77.0°F (25.0℃)	80.0°F 26.7℃)	80.6°F (27.0℃)	84.2°F (29.0℃)	73.4°F (23.0℃)	77.0°F (25.0℃)	80.0°F (26.7℃)	80.6°F (27.0℃)	84.2°F (29.0℃)	73.4°F (23.0℃)	77.0°F(25.0℃)	80.0°F (26.7℃)	80.6°F (27.0℃)	84.2°F (29.0℃)
353	35°F(1.7℃)	TC	17946	17971	17990	17991	18015	19028	19051	19069	19073	19096	20165	20191	20214	20217	20240	21380	21403	21426	21430	21456
		S/T	0.46	0.54	0.62	0.62	0.70	0.49	0.58	0.65	0.66	0.75	0.52	0.61	0.69	0.69	0.79	0.55	0.65	0.74	0.74	0.84
		PI	0.79	0.79	0.79	0.79	0.79	0.84	0.84	0.84	0.84	0.84	0.89	0.89	0.89	0.89	0.89	0.94	0.94	0.94	0.94	0.94
	41°F(5.0℃)	TC	15988	16009	16027	16027	16049	16951	16971	16988	16992	17012	17964	17987	18007	18011	18031	19046	19067	19088	19091	19115
		S/T	0.46	0.54	0.62	0.62	0.71	0.49	0.58	0.66	0.66	0.75	0.52	0.61	0.70	0.70	0.79	0.55	0.65	0.74	0.74	0.84
		PI	0.70	0.70	0.70	0.70	0.70	0.74	0.74	0.75	0.75	0.75	0.79	0.79	0.79	0.79	0.79	0.84	0.84	0.84	0.84	0.84
	47°F(8.3℃)	TC	14029	14048	14063	14064	14083	14875	14892	14907	14910	14928	15763	15784	15801	15804	15822	16713	16731	16750	16752	16773
		S/T	0.47	0.55	0.62	0.62	0.71	0.49	0.58	0.66	0.66	0.75	0.52	0.61	0.70	0.70	0.80	0.55	0.65	0.74	0.74	0.84
		PI	0.61	0.62	0.62	0.62	0.62	0.65	0.65	0.65	0.65	0.65	0.69	0.69	0.69	0.69	0.69	0.73	0.73	0.73	0.73	0.74
	50°F(10.0℃)	TC	14173	14192	14208	14208	14228	15028	15045	15060	15063	15081	15925	15946	15964	15967	15985	16885	16903	16922	16924	16945
		S/T	0.47	0.55	0.62	0.62	0.71	0.50	0.58	0.66	0.66	0.75	0.53	0.62	0.70	0.70	0.80	0.56	0.65	0.74	0.74	0.85
		PI	0.63	0.63	0.63	0.63	0.63	0.66	0.66	0.67	0.67	0.67	0.70	0.70	0.71	0.71	0.71	0.75	0.75	0.75	0.75	0.75
	59°F(15.0℃)	TC	14606	14625	14641	14642	14662	15486	15504	15520	15523	15541	16411	16433	16451	16454	16472	17400	17419	17438	17441	17462
		S/T	0.47	0.55	0.63	0.63	0.72	0.50	0.59	0.66	0.66	0.76	0.53	0.62	0.70	0.70	0.80	0.56	0.66	0.75	0.75	0.85
		PI	0.66	0.66	0.66	0.66	0.66	0.70	0.70	0.70	0.70	0.70	0.74	0.74	0.74	0.74	0.75	0.79	0.79	0.79	0.79	0.79
	68°F(20.0℃)	TC	15038	15058	15075	15075	15096	15945	15963	15979	15982	16001	16897	16919	16938	16941	16960	17915	17935	17954	17957	17979
		S/T	0.48	0.57	0.64	0.64	0.73	0.51	0.60	0.68	0.68	0.78	0.54	0.64	0.72	0.72	0.82	0.58	0.67	0.77	0.77	0.87
		PI	0.69	0.70	0.70	0.70	0.70	0.74	0.74	0.74	0.74	0.74	0.78	0.78	0.78	0.78	0.78	0.83	0.83	0.83	0.83	0.83
	77°F(25.0℃)	TC	15471	15492	15508	15509	15530	16403	16422	16439	16442	16461	17383	17406	17425	17428	17448	18430	18450	18471	18473	18496
		S/T	0.49	0.57	0.65	0.65	0.74	0.52	0.61	0.69	0.69	0.79	0.55	0.65	0.73	0.73	0.84	0.58	0.68	0.78	0.78	0.89
		PI	0.73	0.73	0.73	0.73	0.73	0.77	0.77	0.77	0.78	0.78	0.82	0.82	0.82	0.82	0.82	0.87	0.87	0.87	0.87	0.87
	82°F(27.8℃)	TC	15582	15603	15620	15621	15642	16521	16541	16557	16561	16580	17508	17531	17551	17554	17574	18563	18584	18604	18607	18630
		S/T	0.50	0.58	0.66	0.66	0.75	0.53	0.62	0.70	0.70	0.80	0.56	0.65	0.74	0.74	0.85	0.59	0.69	0.79	0.79	0.90
		PI	0.82	0.82	0.82	0.82	0.82	0.87	0.87	0.87	0.87	0.87	0.92	0.92	0.92	0.92	0.92	0.98	0.98	0.98	0.98	0.98
	86°F(30.0℃)	TC	15509	15530	15547	15548	15569	16444	16463	16480	16483	16503	17426	17449	17468	17472	17491	18476	18496	18517	18519	18543
		S/T	0.50	0.59	0.67	0.67	0.76	0.53	0.62	0.71	0.71	0.81	0.56	0.66	0.75	0.75	0.86	0.60	0.70	0.80	0.80	0.91
		PI	0.98	0.98	0.98	0.98	0.98	1.04	1.04	1.04	1.04	1.04	1.10	1.10	1.10	1.10	1.10	1.17	1.17	1.17	1.17	1.17
	95°F(35.0℃)	TC	15345	15366	15382	15383	15404	16270	16289	16305	16308	16328	17242	17264	17283	17287	17306	18281	18301	18320	18323	18346
		S/T	0.50	0.59	0.67	0.67	0.76	0.53	0.62	0.71	0.71	0.81	0.56	0.66	0.75	0.75	0.86	0.60	0.70	0.80	0.80	0.91
		PI	1.34	1.34	1.34	1.34	1.34	1.42	1.42	1.42	1.42	1.42	1.50	1.51	1.51	1.51	1.51	1.60	1.60	1.60	1.60	1.60
	104°F(40.0℃)	TC	13491	13509	13523	13524	13542	14304	14321	14335	14338	14355	15158	15178	15195	15198	15215	16072	16089	16107	16109	16129
		S/T	0.51	0.60	0.69	0.69	0.78	0.55	0.64	0.73	0.73	0.83	0.58	0.68	0.77	0.77	0.88	0.61	0.72	0.82	0.82	0.93
		PI	1.31	1.31	1.32	1.32	1.32	1.39	1.39	1.40	1.40	1.40	1.48	1.48	1.48	1.48	1.48	1.56	1.57	1.57	1.57	1.57

Manufacturer reserves the right to change, at any time, specifications and designs without notice and without obligations.

Table 9: Cooling Performance 18K (Continued)

AIRFLOW (CFM)	OUTDOOR DB °F (°C)	ID WB°F (°C)	60.8°F(16.0°C)					64.4°F(18.0°C)					67°F(19.4°C)					71.6°F(22.0°C)				
		ID DB°F (°C)	73.4°F (23.0°C)	77.0°F (25.0°C)	80.0°F (26.7°C)	80.6°F (27.0°C)	84.2°F (29.0°C)	73.4°F (23.0°C)	77.0°F (25.0°C)	80.0°F 26.7°C)	80.6°F (27.0°C)	84.2°F (29.0°C)	73.4°F (23.0°C)	77.0°F (25.0°C)	80.0°F (26.7°C)	80.6°F (27.0°C)	84.2°F (29.0°C)	73.4°F (23.0°C)	77.0°F(25.0°C)	80.0°F (26.7°C)	80.6°F (27.0°C)	84.2°F (29.0°C)
353	110°F(43.0°C)	TC	12378	12395	12408	12409	12425	13124	13140	13153	13155	13171	13908	13926	13942	13944	13960	14746	14762	14778	14780	14799
		S/T	0.53	0.63	0.71	0.71	0.81	0.57	0.66	0.75	0.75	0.86	0.60	0.70	0.80	0.80	0.91	0.64	0.75	0.85	0.85	0.97
		PI	1.30	1.30	1.30	1.30	1.30	1.38	1.38	1.38	1.38	1.38	1.46	1.46	1.46	1.46	1.46	1.55	1.55	1.55	1.55	1.55
	115°F(46.0°C)	TC	9962	9976	9986	9987	10000	10563	10575	10586	10588	10600	11194	11208	11221	11223	11235	11868	11881	11894	11896	11911
		S/T	0.54	0.63	0.72	0.72	0.82	0.57	0.67	0.76	0.76	0.87	0.61	0.71	0.81	0.81	0.92	0.64	0.75	0.86	0.86	0.98
		PI	1.09	1.09	1.09	1.09	1.09	1.15	1.15	1.15	1.16	1.16	1.22	1.22	1.22	1.22	1.23	1.29	1.30	1.30	1.30	1.30
	122°F(50.0°C)	TC	6741	6750	6758	6758	6767	7148	7156	7163	7165	7173	7575	7584	7593	7594	7603	8031	8040	8048	8050	8060
		S/T	0.55	0.65	0.74	0.74	0.84	0.59	0.69	0.78	0.78	0.89	0.62	0.73	0.83	0.83	0.94	0.66	0.77	0.88	0.88	1.00
		PI	0.81	0.81	0.81	0.81	0.81	0.85	0.86	0.86	0.86	0.86	0.91	0.91	0.91	0.91	0.91	0.96	0.96	0.96	0.96	0.96
471	5°F(-15.0°C)	TC	16205	16226	16244	16245	16266	17181	17201	17218	17222	17242	18208	18231	18252	18255	18275	19305	19326	19347	19350	19374
		S/T	0.47	0.55	0.63	0.63	0.72	0.50	0.59	0.67	0.67	0.76	0.53	0.62	0.71	0.71	0.80	0.56	0.66	0.75	0.75	0.85
		PI	0.95	0.95	0.95	0.95	0.95	1.00	1.01	1.01	1.01	1.01	1.06	1.07	1.07	1.07	1.07	1.13	1.13	1.13	1.13	1.13
	14°F(-10.0°C)	TC	16575	16597	16615	16615	16638	17573	17594	17612	17615	17636	18623	18647	18668	18672	18693	19745	19767	19788	19791	19816
		S/T	0.47	0.55	0.63	0.63	0.72	0.50	0.59	0.67	0.67	0.76	0.53	0.62	0.71	0.71	0.81	0.56	0.66	0.75	0.75	0.85
		PI	0.94	0.94	0.94	0.94	0.94	0.99	0.99	0.99	0.99	1.00	1.05	1.05	1.05	1.05	1.06	1.12	1.12	1.12	1.12	1.12
	17°F(-8.3°C)	TC	16698	16720	16738	16739	16762	17704	17725	17743	17746	17767	18762	18786	18807	18811	18832	19892	19914	19936	19939	19964
		S/T	0.47	0.56	0.63	0.63	0.72	0.50	0.59	0.67	0.67	0.76	0.53	0.62	0.71	0.71	0.81	0.56	0.66	0.75	0.75	0.86
		PI	0.93	0.93	0.93	0.93	0.94	0.99	0.99	0.99	0.99	0.99	1.05	1.05	1.05	1.05	1.05	1.11	1.11	1.11	1.11	1.11
	23°F(-5.0°C)	TC	17303	17326	17345	17346	17369	18346	18367	18385	18389	18411	19442	19467	19489	19492	19514	20613	20635	20658	20661	20687
		S/T	0.48	0.56	0.63	0.63	0.72	0.50	0.59	0.67	0.67	0.77	0.53	0.63	0.71	0.71	0.81	0.57	0.66	0.76	0.76	0.86
		PI	0.89	0.89	0.89	0.89	0.90	0.95	0.95	0.95	0.95	0.95	1.00	1.00	1.01	1.01	1.01	1.06	1.06	1.07	1.07	1.07
	35°F(1.7°C)	TC	18513	18538	18558	18558	18583	19628	19652	19671	19675	19698	20801	20828	20851	20855	20878	22054	22078	22102	22106	22133
		S/T	0.48	0.56	0.64	0.64	0.73	0.51	0.59	0.68	0.68	0.77	0.54	0.63	0.72	0.72	0.82	0.57	0.67	0.76	0.76	0.87
		PI	0.81	0.81	0.82	0.82	0.82	0.86	0.86	0.86	0.86	0.87	0.91	0.92	0.92	0.92	0.92	0.97	0.97	0.97	0.97	0.97
	41°F(5.0°C)	TC	16492	16514	16532	16533	16555	17486	17507	17524	17528	17548	18531	18555	18576	18579	18600	19647	19669	19690	19693	19718
		S/T	0.48	0.56	0.64	0.64	0.73	0.51	0.60	0.68	0.68	0.77	0.54	0.63	0.72	0.72	0.82	0.57	0.67	0.76	0.76	0.87
		PI	0.72	0.72	0.73	0.73	0.73	0.77	0.77	0.77	0.77	0.77	0.81	0.81	0.82	0.82	0.82	0.86	0.86	0.86	0.86	0.87
	47°F(8.3°C)	TC	14472	14491	14507	14508	14527	15344	15362	15377	15380	15399	16261	16282	16300	16303	16321	17240	17259	17278	17281	17302
		S/T	0.48	0.56	0.64	0.64	0.73	0.51	0.60	0.68	0.68	0.77	0.54	0.63	0.72	0.72	0.82	0.57	0.67	0.76	0.76	0.87
		PI	0.63	0.64	0.64	0.64	0.64	0.67	0.67	0.67	0.67	0.67	0.71	0.71	0.71	0.71	0.72	0.76	0.76	0.76	0.76	0.76
	50°F(10.0°C)	TC	14621	14640	14656	14657	14676	15502	15520	15535	15538	15557	16428	16449	16467	16471	16489	17418	17437	17456	17458	17480
		S/T	0.48	0.57	0.64	0.64	0.73	0.51	0.60	0.68	0.68	0.78	0.54	0.64	0.72	0.72	0.82	0.58	0.67	0.77	0.77	0.87
		PI	0.65	0.65	0.65	0.65	0.65	0.69	0.69	0.69	0.69	0.69	0.73	0.73	0.73	0.73	0.73	0.77	0.77	0.77	0.77	0.77

Manufacturer reserves the right to change, at any time, specifications and designs without notice and without obligations.

Table 9: Cooling Performance 18K (Continued)

AIRFLOW (CFM)	OUTDOOR DB °F (℃)	ID WB°F (℃)	60.8°F(16.0℃)					64.4°F(18.0℃)					67°F(19.4℃)					71.6°F(22.0℃)				
		ID DB°F (℃)	73.4°F (23.0℃)	77.0°F (25.0℃)	80.0°F (26.7℃)	80.6°F (27.0℃)	84.2°F (29.0℃)	73.4°F (23.0℃)	77.0°F (25.0℃)	80.0°F 26.7℃)	80.6°F (27.0℃)	84.2°F (29.0℃)	73.4°F (23.0℃)	77.0°F (25.0℃)	80.0°F (26.7℃)	80.6°F (27.0℃)	84.2°F (29.0℃)	73.4°F (23.0℃)	77.0°F(25.0℃)	80.0°F (26.7℃)	80.6°F (27.0℃)	84.2°F (29.0℃)
471	59°F(15.0℃)	TC	15067	15087	15103	15104	15124	15975	15994	16009	16013	16032	16929	16951	16970	16973	16992	17949	17969	17988	17991	18013
		S/T	0.49	0.57	0.65	0.65	0.74	0.51	0.60	0.69	0.69	0.78	0.55	0.64	0.73	0.73	0.83	0.58	0.68	0.77	0.77	0.88
		PI	0.68	0.68	0.68	0.68	0.68	0.72	0.72	0.72	0.72	0.73	0.77	0.77	0.77	0.77	0.77	0.81	0.81	0.81	0.81	0.81
	68°F(20.0℃)	TC	15513	15534	15550	15551	15572	16448	16467	16483	16487	16506	17430	17453	17472	17476	17495	18481	18501	18521	18524	18547
		S/T	0.50	0.58	0.66	0.66	0.76	0.53	0.62	0.70	0.70	0.80	0.56	0.66	0.75	0.75	0.85	0.59	0.70	0.79	0.79	0.90
		PI	0.72	0.72	0.72	0.72	0.72	0.76	0.76	0.76	0.76	0.76	0.81	0.81	0.81	0.81	0.81	0.85	0.85	0.86	0.86	0.86
	77°F(25.0℃)	TC	15959	15980	15998	15998	16020	16921	16941	16957	16961	16981	17932	17955	17975	17978	17998	19012	19033	19053	19056	19080
		S/T	0.50	0.59	0.67	0.67	0.77	0.54	0.63	0.71	0.71	0.81	0.57	0.67	0.76	0.76	0.86	0.60	0.71	0.80	0.80	0.91
		PI	0.75	0.75	0.75	0.75	0.76	0.80	0.80	0.80	0.80	0.80	0.85	0.85	0.85	0.85	0.85	0.90	0.90	0.90	0.90	0.90
	82°F(27.8℃)	TC	16074	16096	16113	16114	16135	17043	17063	17080	17083	17103	18061	18084	18105	18108	18128	19149	19170	19191	19194	19218
		S/T	0.51	0.60	0.68	0.68	0.78	0.54	0.64	0.72	0.72	0.82	0.57	0.67	0.77	0.77	0.87	0.61	0.71	0.81	0.81	0.93
		PI	0.84	0.85	0.85	0.85	0.85	0.90	0.90	0.90	0.90	0.90	0.95	0.95	0.95	0.95	0.95	1.01	1.01	1.01	1.01	1.01
	86°F(30.0℃)	TC	15999	16020	16037	16038	16060	16963	16983	17000	17003	17023	17976	18000	18020	18023	18043	19059	19080	19101	19104	19128
		S/T	0.52	0.61	0.69	0.69	0.79	0.55	0.64	0.73	0.73	0.83	0.58	0.68	0.78	0.78	0.88	0.62	0.72	0.82	0.82	0.94
		PI	1.01	1.01	1.01	1.01	1.01	1.07	1.07	1.07	1.07	1.07	1.13	1.14	1.14	1.14	1.14	1.20	1.20	1.21	1.21	1.21
	95°F(35.0℃)	TC	15829	15850	15868	15868	15890	16783	16803	16820	16823	16843	17786	17809	17829	17832	17852	18857	18878	18899	18901	18925
		S/T	0.52	0.61	0.69	0.69	0.79	0.55	0.64	0.73	0.73	0.83	0.58	0.68	0.78	0.78	0.88	0.62	0.72	0.82	0.82	0.94
		PI	1.38	1.38	1.38	1.38	1.39	1.46	1.47	1.47	1.47	1.47	1.55	1.55	1.56	1.56	1.56	1.65	1.65	1.65	1.65	1.65
	104°F(40.0℃)	TC	13916	13935	13950	13951	13970	14755	14772	14787	14790	14808	15637	15657	15674	15677	15695	16579	16597	16615	16617	16638
		S/T	0.53	0.62	0.71	0.71	0.81	0.56	0.66	0.75	0.75	0.85	0.60	0.70	0.79	0.79	0.91	0.63	0.74	0.84	0.84	0.96
		PI	1.35	1.36	1.36	1.36	1.36	1.44	1.44	1.44	1.44	1.44	1.52	1.52	1.53	1.53	1.53	1.61	1.62	1.62	1.62	1.62
	110°F(43.0℃)	TC	12769	12786	12800	12800	12817	13538	13554	13568	13570	13586	14347	14366	14382	14384	14400	15211	15228	15244	15247	15266
		S/T	0.55	0.65	0.73	0.73	0.84	0.58	0.68	0.78	0.78	0.89	0.62	0.73	0.82	0.82	0.94	0.66	0.77	0.87	0.87	1.00
		PI	1.34	1.34	1.34	1.34	1.34	1.42	1.42	1.42	1.42	1.42	1.50	1.51	1.51	1.51	1.51	1.59	1.60	1.60	1.60	1.60
	115°F(46.0℃)	TC	10277	10290	10302	10302	10316	10896	10909	10920	10922	10935	11547	11562	11575	11577	11590	12243	12256	12269	12271	12287
		S/T	0.56	0.65	0.74	0.74	0.85	0.59	0.69	0.79	0.79	0.90	0.63	0.73	0.83	0.83	0.95	0.66	0.78	0.88	0.88	1.00
		PI	1.12	1.12	1.12	1.12	1.13	1.19	1.19	1.19	1.19	1.19	1.26	1.26	1.26	1.26	1.26	1.34	1.34	1.34	1.34	1.34
	122°F(50.0℃)	TC	6954	6963	6971	6971	6981	7373	7382	7389	7391	7399	7814	7824	7832	7834	7843	8284	8293	8302	8304	8314
		S/T	0.57	0.67	0.76	0.76	0.87	0.60	0.71	0.80	0.80	0.92	0.64	0.75	0.85	0.85	0.97	0.68	0.80	0.90	0.90	1.00
		PI	0.83	0.83	0.83	0.83	0.83	0.88	0.88	0.88	0.88	0.88	0.93	0.94	0.94	0.94	0.94	0.99	0.99	0.99	0.99	0.99
500	5°F(-15.0℃)	TC	16716	16738	16756	16757	16780	17723	17744	17762	17765	17786	18782	18806	18827	18831	18852	19914	19935	19957	19960	19985
		S/T	0.49	0.57	0.65	0.65	0.74	0.51	0.60	0.69	0.69	0.78	0.55	0.64	0.73	0.73	0.83	0.58	0.68	0.77	0.77	0.88
		PI	0.98	0.98	0.98	0.98	0.98	1.04	1.04	1.04	1.04	1.04	1.10	1.10	1.10	1.10	1.10	1.16	1.17	1.17	1.17	1.17

Manufacturer reserves the right to change, at any time, specifications and designs without notice and without obligations.

Table 9: Cooling Performance 18K (Continued)

AIRFLOW (CFM)	OUTDOOR DB °F (℃)	ID WB°F (℃)	60.8°F(16.0℃)					64.4°F(18.0℃)					67°F(19.4℃)					71.6°F(22.0℃)				
		ID DB°F (℃)	73.4°F (23.0℃)	77.0°F (25.0℃)	80.0°F (26.7℃)	80.6°F (27.0℃)	84.2°F (29.0℃)	73.4°F (23.0℃)	77.0°F (25.0℃)	80.0°F 26.7℃)	80.6°F (27.0℃)	84.2°F (29.0℃)	73.4°F (23.0℃)	77.0°F (25.0℃)	80.0°F (26.7℃)	80.6°F (27.0℃)	84.2°F (29.0℃)	73.4°F (23.0℃)	77.0°F(25.0℃)	80.0°F (26.7℃)	80.6°F (27.0℃)	84.2°F (29.0℃)
500	14°F(-10.0℃)	TC	17098	17121	17139	17140	17163	18128	18149	18167	18171	18192	19211	19236	19257	19261	19282	20368	20391	20413	20416	20441
		S/T	0.49	0.57	0.65	0.65	0.74	0.52	0.61	0.69	0.69	0.78	0.55	0.64	0.73	0.73	0.83	0.58	0.68	0.77	0.77	0.88
		PI	0.97	0.97	0.97	0.97	0.97	1.02	1.02	1.03	1.03	1.03	1.08	1.09	1.09	1.09	1.09	1.15	1.15	1.15	1.15	1.15
	17°F(-8.3℃)	TC	17225	17248	17266	17267	17291	18263	18284	18302	18306	18328	19354	19379	19401	19404	19426	20520	20542	20565	20568	20593
		S/T	0.49	0.57	0.65	0.65	0.74	0.52	0.61	0.69	0.69	0.79	0.55	0.64	0.73	0.73	0.83	0.58	0.68	0.78	0.78	0.88
		PI	0.96	0.96	0.96	0.96	0.97	1.02	1.02	1.02	1.02	1.02	1.08	1.08	1.08	1.08	1.08	1.15	1.15	1.15	1.15	1.15
	23°F(-5.0℃)	TC	17849	17873	17892	17893	17917	18924	18947	18966	18969	18992	20055	20081	20104	20107	20130	21263	21287	21310	21313	21340
		S/T	0.49	0.58	0.65	0.65	0.75	0.52	0.61	0.69	0.69	0.79	0.55	0.65	0.74	0.74	0.84	0.58	0.69	0.78	0.78	0.89
		PI	0.92	0.92	0.92	0.92	0.92	0.98	0.98	0.98	0.98	0.98	1.03	1.04	1.04	1.04	1.04	1.10	1.10	1.10	1.10	1.10
	35°F(1.7℃)	TC	19097	19123	19143	19144	19170	20248	20272	20292	20296	20320	21457	21485	21509	21513	21537	22750	22775	22800	22803	22832
		S/T	0.49	0.58	0.66	0.66	0.75	0.52	0.61	0.70	0.70	0.79	0.55	0.65	0.74	0.74	0.84	0.59	0.69	0.78	0.78	0.89
		PI	0.84	0.84	0.84	0.84	0.84	0.89	0.89	0.89	0.89	0.89	0.94	0.94	0.95	0.95	0.95	1.00	1.00	1.00	1.00	1.00
	41°F(5.0℃)	TC	17013	17036	17054	17055	17078	18038	18059	18077	18081	18102	19116	19140	19162	19165	19187	20267	20289	20311	20315	20340
		S/T	0.49	0.58	0.66	0.66	0.75	0.52	0.61	0.70	0.70	0.80	0.56	0.65	0.74	0.74	0.84	0.59	0.69	0.78	0.78	0.89
		PI	0.75	0.75	0.75	0.75	0.75	0.79	0.79	0.79	0.79	0.79	0.84	0.84	0.84	0.84	0.84	0.89	0.89	0.89	0.89	0.89
	47°F(8.3℃)	TC	14929	14949	14965	14965	14986	15828	15847	15863	15866	15885	16774	16796	16814	16817	16836	17784	17804	17823	17826	17848
		S/T	0.50	0.58	0.66	0.66	0.75	0.53	0.62	0.70	0.70	0.80	0.56	0.65	0.74	0.74	0.85	0.59	0.69	0.79	0.79	0.90
		PI	0.65	0.66	0.66	0.66	0.66	0.69	0.69	0.70	0.70	0.70	0.74	0.74	0.74	0.74	0.74	0.78	0.78	0.78	0.78	0.78
	50°F(10.0℃)	TC	15082	15102	15118	15119	15140	15991	16010	16026	16029	16048	16946	16968	16987	16990	17009	17967	17987	18006	18009	18032
		S/T	0.50	0.58	0.66	0.66	0.76	0.53	0.62	0.70	0.70	0.80	0.56	0.66	0.75	0.75	0.85	0.59	0.70	0.79	0.79	0.90
		PI	0.67	0.67	0.67	0.67	0.67	0.71	0.71	0.71	0.71	0.71	0.75	0.75	0.75	0.75	0.75	0.79	0.79	0.80	0.80	0.80
	59°F(15.0℃)	TC	15542	15563	15580	15580	15601	16479	16498	16515	16518	16537	17463	17486	17505	17509	17528	18515	18536	18556	18559	18582
		S/T	0.50	0.59	0.67	0.67	0.76	0.53	0.62	0.71	0.71	0.81	0.56	0.66	0.75	0.75	0.86	0.60	0.70	0.80	0.80	0.91
		PI	0.70	0.70	0.70	0.70	0.71	0.75	0.75	0.75	0.75	0.75	0.79	0.79	0.79	0.79	0.79	0.84	0.84	0.84	0.84	0.84
	68°F(20.0℃)	TC	16002	16024	16041	16042	16063	16967	16987	17003	17007	17027	17980	18004	18024	18027	18047	19064	19084	19105	19108	19132
		S/T	0.51	0.60	0.69	0.69	0.78	0.54	0.64	0.73	0.73	0.83	0.58	0.68	0.77	0.77	0.88	0.61	0.72	0.82	0.82	0.93
		PI	0.74	0.74	0.74	0.74	0.74	0.78	0.78	0.79	0.79	0.79	0.83	0.83	0.83	0.83	0.83	0.88	0.88	0.88	0.88	0.88
	77°F(25.0℃)	TC	16462	16485	16502	16503	16525	17455	17475	17492	17496	17517	18497	18521	18542	18545	18566	19612	19633	19655	19658	19682
		S/T	0.52	0.61	0.69	0.69	0.79	0.55	0.65	0.74	0.74	0.84	0.59	0.69	0.78	0.78	0.89	0.62	0.73	0.83	0.83	0.94
		PI	0.78	0.78	0.78	0.78	0.78	0.82	0.82	0.82	0.82	0.83	0.87	0.87	0.87	0.87	0.88	0.92	0.93	0.93	0.93	0.93
	82°F(27.8℃)	TC	16581	16603	16621	16622	16645	17580	17601	17619	17622	17643	18631	18655	18676	18679	18700	19753	19775	19796	19799	19824
		S/T	0.53	0.62	0.70	0.70	0.80	0.56	0.66	0.75	0.75	0.85	0.59	0.70	0.79	0.79	0.90	0.63	0.74	0.84	0.84	0.95
		PI	0.87	0.87	0.87	0.87	0.87	0.92	0.92	0.93	0.93	0.93	0.98	0.98	0.98	0.98	0.98	1.04	1.04	1.04	1.04	1.04

Manufacturer reserves the right to change, at any time, specifications and designs without notice and without obligations.

Table 9: Cooling Performance 18K (Continued)

AIRFLOW (CFM)	OUTDOOR DB °F (℃)	ID WB°F (℃)	60.8°F(16.0℃)					64.4°F(18.0℃)					67°F(19.4℃)					71.6°F(22.0℃)				
		ID DB°F (℃)	73.4°F (23.0℃)	77.0°F (25.0℃)	80.0°F (26.7℃)	80.6°F (27.0℃)	84.2°F (29.0℃)	73.4°F (23.0℃)	77.0°F (25.0℃)	80.0°F 26.7℃)	80.6°F (27.0℃)	84.2°F (29.0℃)	73.4°F (23.0℃)	77.0°F (25.0℃)	80.0°F (26.7℃)	80.6°F (27.0℃)	84.2°F (29.0℃)	73.4°F (23.0℃)	77.0°F(25.0℃)	80.0°F (26.7℃)	80.6°F (27.0℃)	84.2°F (29.0℃)
500	86°F(30.0℃)	TC	16503	16526	16543	16544	16567	17498	17519	17536	17540	17560	18543	18568	18588	18592	18612	19661	19682	19704	19707	19731
		S/T	0.53	0.63	0.71	0.71	0.81	0.57	0.66	0.75	0.75	0.86	0.60	0.70	0.80	0.80	0.91	0.64	0.75	0.85	0.85	0.97
		PI	1.04	1.04	1.04	1.04	1.05	1.10	1.11	1.11	1.11	1.11	1.17	1.17	1.17	1.17	1.17	1.24	1.24	1.24	1.24	1.25
	95°F(35.0℃)	TC	16329	16351	16368	16369	16391	17313	17333	17350	17354	17374	18347	18371	18391	18395	18415	19453	19474	19495	19498	19522
		S/T	0.53	0.63	0.71	0.71	0.81	0.57	0.66	0.75	0.75	0.86	0.60	0.70	0.80	0.80	0.91	0.64	0.75	0.85	0.85	0.97
		PI	1.42	1.43	1.43	1.43	1.43	1.51	1.51	1.51	1.51	1.52	1.60	1.60	1.61	1.61	1.61	1.70	1.70	1.70	1.70	1.70
	104°F(40.0℃)	TC	14355	14375	14390	14391	14410	15221	15239	15254	15257	15275	16130	16151	16169	16172	16190	17102	17120	17139	17142	17163
		S/T	0.55	0.64	0.73	0.73	0.83	0.58	0.68	0.77	0.77	0.88	0.62	0.72	0.82	0.82	0.93	0.65	0.76	0.87	0.87	0.99
		PI	1.40	1.40	1.40	1.40	1.40	1.48	1.48	1.48	1.48	1.49	1.57	1.57	1.57	1.57	1.58	1.66	1.67	1.67	1.67	1.67
	110°F(43.0℃)	TC	13172	13189	13203	13204	13222	13965	13982	13996	13998	14015	14800	14819	14835	14838	14855	15691	15708	15725	15728	15748
		S/T	0.57	0.67	0.76	0.76	0.86	0.60	0.71	0.80	0.80	0.91	0.64	0.75	0.85	0.85	0.97	0.68	0.79	0.90	0.90	1.00
		PI	1.38	1.38	1.38	1.38	1.39	1.46	1.47	1.47	1.47	1.47	1.55	1.55	1.56	1.56	1.56	1.64	1.65	1.65	1.65	1.65
	115°F(46.0℃)	TC	10601	10615	10627	10627	10641	11240	11253	11264	11266	11280	11911	11927	11940	11942	11956	12629	12643	12656	12658	12674
		S/T	0.57	0.67	0.77	0.77	0.87	0.61	0.71	0.81	0.81	0.92	0.65	0.76	0.86	0.86	0.98	0.68	0.80	0.91	0.91	1.00
		PI	1.16	1.16	1.16	1.16	1.16	1.23	1.23	1.23	1.23	1.23	1.30	1.30	1.30	1.30	1.30	1.38	1.38	1.38	1.38	1.38
	122°F(50.0℃)	TC	7173	7183	7191	7191	7201	7606	7615	7622	7624	7633	8060	8071	8080	8081	8090	8546	8555	8564	8566	8576
		S/T	0.59	0.69	0.78	0.78	0.89	0.62	0.73	0.83	0.83	0.95	0.66	0.77	0.88	0.88	1.00	0.70	0.82	0.93	0.93	1.00
		PI	0.86	0.86	0.86	0.86	0.86	0.91	0.91	0.91	0.91	0.91	0.96	0.96	0.97	0.97	0.97	1.02	1.02	1.02	1.02	1.03

LEGEND

TC: Total Cooling Capacity (BTU/hr)
S/T: Sensible Cooling Capacity Ratio
PI: Power Input (kW)

Manufacturer reserves the right to change, at any time, specifications and designs without notice and without obligations.

Table 10: Cooling Performance 24K

AIRFLOW (CFM)	OUTDOOR DB °F (℃)	ID WB°F (℃)	60.8°F(16.0℃)					64.4°F(18.0℃)					67°F(19.4℃)					71.6°F(22.0℃)				
		ID DB°F (℃)	73.4°F (23.0℃)	77.0°F (25.0℃)	80.0°F (26.7℃)	80.6°F (27.0℃)	84.2°F (29.0℃)	73.4°F (23.0℃)	77.0°F (25.0℃)	80.0°F 26.7℃)	80.6°F (27.0℃)	84.2°F (29.0℃)	73.4°F (23.0℃)	77.0°F (25.0℃)	80.0°F (26.7℃)	80.6°F (27.0℃)	84.2°F (29.0℃)	73.4°F (23.0℃)	77.0°F(25.0℃)	80.0°F (26.7℃)	80.6°F (27.0℃)	84.2°F (29.0℃)
400	5°F(-15.0℃)	TC	7946	7957	7965	7966	7977	8425	8435	8443	8445	8455	8928	8940	8950	8952	8962	9466	9477	9487	9488	9500
		S/T	0.31	0.36	0.41	0.41	0.47	0.33	0.38	0.43	0.43	0.49	0.35	0.40	0.46	0.46	0.52	0.37	0.43	0.49	0.49	0.56
		PI	0.81	0.82	0.82	0.82	0.82	0.86	0.86	0.87	0.87	0.87	0.92	0.92	0.92	0.92	0.92	0.97	0.97	0.97	0.97	0.97
	14°F(-10.0℃)	TC	11004	11019	11031	11032	11047	11668	11681	11693	11695	11709	12365	12381	12395	12397	12411	13110	13124	13138	13140	13157
		S/T	0.31	0.36	0.41	0.41	0.47	0.33	0.38	0.44	0.44	0.50	0.35	0.41	0.46	0.46	0.53	0.37	0.43	0.49	0.49	0.56
		PI	0.48	0.48	0.48	0.48	0.48	0.51	0.51	0.51	0.51	0.51	0.54	0.54	0.54	0.54	0.54	0.57	0.57	0.57	0.57	0.57
	17°F(-8.3℃)	TC	12024	12040	12053	12054	12070	12749	12764	12776	12779	12794	13510	13528	13543	13545	13560	14324	14340	14355	14358	14375
		S/T	0.31	0.36	0.41	0.41	0.47	0.33	0.38	0.44	0.44	0.50	0.35	0.41	0.46	0.46	0.53	0.37	0.43	0.49	0.49	0.56
		PI	0.37	0.37	0.37	0.37	0.37	0.39	0.39	0.39	0.39	0.39	0.41	0.41	0.41	0.41	0.41	0.44	0.44	0.44	0.44	0.44
	23°F(-5.0℃)	TC	12162	12179	12192	12192	12209	12895	12911	12923	12926	12941	13666	13683	13699	13701	13717	14489	14505	14521	14523	14541
		S/T	0.31	0.36	0.41	0.41	0.47	0.33	0.39	0.44	0.44	0.50	0.35	0.41	0.46	0.46	0.53	0.37	0.43	0.49	0.49	0.56
		PI	0.47	0.47	0.48	0.48	0.48	0.50	0.50	0.50	0.50	0.50	0.53	0.53	0.53	0.53	0.53	0.56	0.57	0.57	0.57	0.57
	35°F(1.7℃)	TC	12439	12456	12469	12470	12487	13189	13204	13217	13220	13236	13977	13995	14010	14013	14029	14819	14835	14851	14853	14872
		S/T	0.31	0.37	0.42	0.42	0.47	0.33	0.39	0.44	0.44	0.50	0.35	0.41	0.47	0.47	0.53	0.37	0.44	0.50	0.50	0.56
		PI	0.69	0.69	0.69	0.69	0.69	0.73	0.73	0.73	0.73	0.73	0.78	0.78	0.78	0.78	0.78	0.82	0.82	0.82	0.82	0.83
	41°F(5.0℃)	TC	12407	12424	12437	12438	12454	13155	13170	13183	13186	13202	13941	13959	13974	13977	13993	14781	14797	14813	14815	14834
		S/T	0.31	0.37	0.42	0.42	0.47	0.33	0.39	0.44	0.44	0.50	0.35	0.41	0.47	0.47	0.53	0.37	0.44	0.50	0.50	0.57
		PI	0.70	0.70	0.70	0.70	0.70	0.74	0.74	0.74	0.74	0.74	0.79	0.79	0.79	0.79	0.79	0.83	0.83	0.84	0.84	0.84
	47°F(8.3℃)	TC	12375	12392	12405	12406	12422	13121	13136	13149	13152	13168	13905	13923	13938	13941	13957	14743	14759	14775	14777	14795
		S/T	0.31	0.37	0.42	0.42	0.48	0.33	0.39	0.44	0.44	0.50	0.35	0.41	0.47	0.47	0.54	0.37	0.44	0.50	0.50	0.57
		PI	0.71	0.71	0.71	0.71	0.71	0.75	0.75	0.75	0.75	0.75	0.80	0.80	0.80	0.80	0.80	0.84	0.84	0.85	0.85	0.85
	50°F(10.0℃)	TC	12517	12534	12548	12548	12565	13272	13287	13300	13303	13319	14065	14083	14099	14101	14117	14912	14928	14944	14947	14965
		S/T	0.31	0.37	0.42	0.42	0.48	0.33	0.39	0.45	0.45	0.51	0.35	0.42	0.47	0.47	0.54	0.38	0.44	0.50	0.50	0.57
		PI	0.71	0.71	0.71	0.71	0.72	0.76	0.76	0.76	0.76	0.76	0.80	0.80	0.80	0.80	0.80	0.85	0.85	0.85	0.85	0.85
	59°F(15.0℃)	TC	12944	12961	12975	12976	12993	13724	13740	13754	13756	13773	14544	14563	14579	14582	14598	15420	15437	15454	15456	15475
		S/T	0.32	0.37	0.42	0.42	0.48	0.34	0.39	0.45	0.45	0.51	0.36	0.42	0.47	0.47	0.54	0.38	0.44	0.50	0.50	0.57
		PI	0.73	0.73	0.73	0.73	0.73	0.77	0.77	0.77	0.77	0.77	0.82	0.82	0.82	0.82	0.82	0.86	0.87	0.87	0.87	0.87
	68°F(20.0℃)	TC	13370	13388	13403	13403	13422	14176	14193	14207	14210	14227	15023	15043	15059	15062	15079	15928	15946	15963	15966	15985
		S/T	0.33	0.38	0.43	0.43	0.49	0.34	0.40	0.46	0.46	0.52	0.37	0.43	0.49	0.49	0.56	0.39	0.45	0.52	0.52	0.59
		PI	0.74	0.74	0.74	0.74	0.74	0.78	0.78	0.79	0.79	0.79	0.83	0.83	0.83	0.83	0.83	0.88	0.88	0.88	0.88	0.88
	77°F(25.0℃)	TC	13797	13816	13831	13831	13850	14629	14646	14660	14663	14681	15503	15523	15540	15543	15560	16437	16454	16472	16475	16495
		S/T	0.33	0.39	0.44	0.44	0.50	0.35	0.41	0.47	0.47	0.53	0.37	0.43	0.49	0.49	0.56	0.39	0.46	0.52	0.52	0.60
		PI	0.75	0.75	0.75	0.75	0.76	0.80	0.80	0.80	0.80	0.80	0.85	0.85	0.85	0.85	0.85	0.90	0.90	0.90	0.90	0.90

Manufacturer reserves the right to change, at any time, specifications and designs without notice and without obligations.

Table 10: Cooling Performance 24K (Continued)

AIRFLOW (CFM)	OUTDOOR DB °F (°C)	ID WB°F (°C)	60.8°F(16.0°C)					64.4°F(18.0°C)					67°F(19.4°C)					71.6°F(22.0°C)				
		ID DB°F (°C)	73.4°F (23.0°C)	77.0°F (25.0°C)	80.0°F (26.7°C)	80.6°F (27.0°C)	84.2°F (29.0°C)	73.4°F (23.0°C)	77.0°F (25.0°C)	80.0°F 26.7°C)	80.6°F (27.0°C)	84.2°F (29.0°C)	73.4°F (23.0°C)	77.0°F (25.0°C)	80.0°F (26.7°C)	80.6°F (27.0°C)	84.2°F (29.0°C)	73.4°F (23.0°C)	77.0°F(25.0°C)	80.0°F (26.7°C)	80.6°F (27.0°C)	84.2°F (29.0°C)
400	82°F(27.8°C)	TC	13783	13801	13816	13817	13836	14614	14631	14645	14648	14666	15487	15507	15524	15527	15544	16420	16438	16455	16458	16479
		S/T	0.33	0.39	0.44	0.44	0.51	0.35	0.41	0.47	0.47	0.54	0.37	0.44	0.50	0.50	0.57	0.40	0.47	0.53	0.53	0.60
		PI	0.80	0.80	0.80	0.80	0.80	0.85	0.85	0.85	0.85	0.85	0.90	0.90	0.90	0.90	0.90	0.96	0.96	0.96	0.96	0.96
	86°F(30.0°C)	TC	13455	13473	13487	13488	13506	14266	14282	14297	14299	14316	15118	15138	15154	15157	15174	16029	16046	16064	16066	16086
		S/T	0.34	0.40	0.45	0.45	0.51	0.36	0.42	0.48	0.48	0.54	0.38	0.45	0.51	0.51	0.58	0.40	0.47	0.54	0.54	0.61
		PI	0.89	0.90	0.90	0.90	0.90	0.95	0.95	0.95	0.95	0.95	1.00	1.01	1.01	1.01	1.01	1.07	1.07	1.07	1.07	1.07
	95°F(35.0°C)	TC	12716	12733	12747	12748	12765	13483	13499	13512	13515	13531	14288	14307	14323	14325	14341	15149	15166	15182	15184	15203
		S/T	0.34	0.40	0.45	0.45	0.51	0.36	0.42	0.48	0.48	0.54	0.38	0.45	0.51	0.51	0.58	0.40	0.47	0.54	0.54	0.61
		PI	1.10	1.10	1.10	1.11	1.11	1.17	1.17	1.17	1.17	1.17	1.24	1.24	1.24	1.24	1.24	1.31	1.31	1.32	1.32	1.32
	104°F(40.0°C)	TC	11353	11368	11380	11381	11396	12037	12051	12063	12066	12080	12756	12773	12787	12789	12804	13525	13540	13554	13556	13573
		S/T	0.35	0.41	0.46	0.46	0.53	0.37	0.43	0.49	0.49	0.56	0.39	0.46	0.52	0.52	0.59	0.41	0.48	0.55	0.55	0.63
		PI	1.11	1.11	1.11	1.11	1.11	1.17	1.18	1.18	1.18	1.18	1.24	1.25	1.25	1.25	1.25	1.32	1.32	1.32	1.32	1.32
	110°F(43.0°C)	TC	10535	10549	10560	10561	10575	11170	11183	11194	11196	11210	11837	11852	11866	11868	11881	12550	12564	12578	12580	12595
		S/T	0.36	0.42	0.48	0.48	0.55	0.38	0.45	0.51	0.51	0.58	0.40	0.47	0.54	0.54	0.61	0.43	0.50	0.57	0.57	0.65
		PI	1.11	1.11	1.11	1.11	1.11	1.18	1.18	1.18	1.18	1.18	1.25	1.25	1.25	1.25	1.25	1.32	1.32	1.33	1.33	1.33
	115°F(46.0°C)	TC	9484	9497	9507	9507	9520	10056	10067	10077	10079	10091	10656	10670	10682	10684	10696	11298	11311	11323	11325	11339
		S/T	0.36	0.43	0.48	0.48	0.55	0.38	0.45	0.51	0.51	0.58	0.41	0.48	0.54	0.54	0.62	0.43	0.51	0.58	0.58	0.66
		PI	1.08	1.08	1.08	1.08	1.08	1.14	1.15	1.15	1.15	1.15	1.21	1.21	1.22	1.22	1.22	1.29	1.29	1.29	1.29	1.29
	122°F(50.0°C)	TC	8083	8094	8102	8103	8114	8570	8580	8589	8590	8600	9082	9094	9104	9106	9116	9629	9640	9650	9652	9664
		S/T	0.37	0.44	0.50	0.50	0.56	0.39	0.46	0.52	0.53	0.60	0.42	0.49	0.56	0.56	0.63	0.44	0.52	0.59	0.59	0.67
		PI	1.04	1.04	1.04	1.04	1.04	1.10	1.10	1.10	1.10	1.11	1.17	1.17	1.17	1.17	1.17	1.24	1.24	1.24	1.24	1.24
471	5°F(-15.0°C)	TC	9258	9270	9280	9281	9293	9816	9827	9837	9839	9851	10402	10416	10427	10429	10441	11029	11041	11053	11054	11068
		S/T	0.36	0.42	0.48	0.48	0.54	0.38	0.45	0.51	0.51	0.58	0.40	0.47	0.54	0.54	0.61	0.43	0.50	0.57	0.57	0.65
		PI	0.95	0.95	0.95	0.95	0.95	1.01	1.01	1.01	1.01	1.01	1.07	1.07	1.07	1.07	1.07	1.13	1.13	1.13	1.13	1.14
	14°F(-10.0°C)	TC	12821	12838	12852	12852	12870	13593	13609	13623	13626	13642	14406	14424	14440	14443	14459	15273	15290	15307	15309	15328
		S/T	0.36	0.42	0.48	0.48	0.55	0.38	0.45	0.51	0.51	0.58	0.40	0.47	0.54	0.54	0.61	0.43	0.50	0.57	0.57	0.65
		PI	0.56	0.56	0.56	0.56	0.56	0.59	0.59	0.59	0.59	0.59	0.63	0.63	0.63	0.63	0.63	0.66	0.66	0.66	0.66	0.67
	17°F(-8.3°C)	TC	14008	14027	14042	14043	14062	14853	14870	14885	14888	14906	15740	15760	15778	15781	15799	16688	16707	16725	16727	16748
		S/T	0.36	0.42	0.48	0.48	0.55	0.38	0.45	0.51	0.51	0.58	0.40	0.47	0.54	0.54	0.61	0.43	0.50	0.57	0.57	0.65
		PI	0.43	0.43	0.43	0.43	0.43	0.45	0.45	0.45	0.45	0.45	0.48	0.48	0.48	0.48	0.48	0.51	0.51	0.51	0.51	0.51
	23°F(-5.0°C)	TC	14170	14189	14204	14205	14224	15024	15041	15056	15059	15077	15921	15942	15960	15963	15980	16880	16899	16917	16920	16941
		S/T	0.36	0.42	0.48	0.48	0.55	0.38	0.45	0.51	0.51	0.58	0.41	0.48	0.54	0.54	0.62	0.43	0.51	0.57	0.57	0.65
		PI	0.55	0.55	0.55	0.55	0.55	0.59	0.59	0.59	0.59	0.59	0.62	0.62	0.62	0.62	0.62	0.66	0.66	0.66	0.66	0.66

Manufacturer reserves the right to change, at any time, specifications and designs without notice and without obligations.

Table 10: Cooling Performance 24K (Continued)

AIRFLOW (CFM)	OUTDOOR DB °F (℃)	ID WB°F (℃)	60.8°F(16.0℃)					64.4°F(18.0℃)					67°F(19.4℃)					71.6°F(22.0℃)				
		ID DB°F (℃)	73.4°F (23.0℃)	77.0°F (25.0℃)	80.0°F (26.7℃)	80.6°F (27.0℃)	84.2°F (29.0℃)	73.4°F (23.0℃)	77.0°F (25.0℃)	80.0°F 26.7℃)	80.6°F (27.0℃)	84.2°F (29.0℃)	73.4°F (23.0℃)	77.0°F (25.0℃)	80.0°F (26.7℃)	80.6°F (27.0℃)	84.2°F (29.0℃)	73.4°F (23.0℃)	77.0°F(25.0℃)	80.0°F (26.7℃)	80.6°F (27.0℃)	84.2°F (29.0℃)
471	35°F(1.7℃)	TC	14492	14512	14527	14528	14548	15366	15384	15399	15402	15420	16284	16305	16323	16326	16344	17265	17283	17302	17305	17326
		S/T	0.36	0.43	0.48	0.48	0.55	0.39	0.45	0.51	0.51	0.59	0.41	0.48	0.54	0.54	0.62	0.43	0.51	0.58	0.58	0.66
		PI	0.80	0.81	0.81	0.81	0.81	0.85	0.85	0.86	0.86	0.86	0.90	0.91	0.91	0.91	0.91	0.96	0.96	0.96	0.96	0.96
	41°F(5.0℃)	TC	14455	14474	14490	14491	14510	15326	15344	15359	15362	15381	16242	16263	16281	16284	16302	17220	17239	17258	17260	17282
		S/T	0.36	0.43	0.49	0.49	0.55	0.39	0.45	0.51	0.51	0.59	0.41	0.48	0.55	0.55	0.62	0.43	0.51	0.58	0.58	0.66
		PI	0.81	0.82	0.82	0.82	0.82	0.86	0.86	0.87	0.87	0.87	0.92	0.92	0.92	0.92	0.92	0.97	0.97	0.97	0.97	0.97
	47°F(8.3℃)	TC	14418	14437	14453	14453	14473	15286	15305	15320	15323	15341	16200	16221	16239	16242	16260	17176	17194	17213	17216	17237
		S/T	0.37	0.43	0.49	0.49	0.56	0.39	0.45	0.52	0.52	0.59	0.41	0.48	0.55	0.55	0.62	0.43	0.51	0.58	0.58	0.66
		PI	0.82	0.83	0.83	0.83	0.83	0.87	0.88	0.88	0.88	0.88	0.93	0.93	0.93	0.93	0.93	0.98	0.98	0.98	0.99	0.99
	50°F(10.0℃)	TC	14583	14603	14619	14619	14639	15462	15480	15496	15499	15517	16386	16407	16425	16429	16447	17373	17392	17411	17414	17435
		S/T	0.37	0.43	0.49	0.49	0.56	0.39	0.46	0.52	0.52	0.59	0.41	0.48	0.55	0.55	0.63	0.44	0.51	0.58	0.58	0.66
		PI	0.83	0.83	0.83	0.83	0.83	0.88	0.88	0.88	0.88	0.88	0.93	0.93	0.94	0.94	0.94	0.99	0.99	0.99	0.99	0.99
	59°F(15.0℃)	TC	15080	15101	15117	15117	15138	15989	16008	16024	16027	16046	16944	16966	16985	16988	17007	17965	17985	18004	18007	18030
		S/T	0.37	0.43	0.49	0.49	0.56	0.39	0.46	0.52	0.52	0.59	0.41	0.49	0.55	0.55	0.63	0.44	0.52	0.59	0.59	0.67
		PI	0.85	0.85	0.85	0.85	0.85	0.90	0.90	0.90	0.90	0.90	0.95	0.95	0.95	0.95	0.95	1.01	1.01	1.01	1.01	1.01
	68°F(20.0℃)	TC	15577	15598	15615	15616	15637	16516	16536	16552	16555	16575	17503	17525	17545	17548	17568	18557	18577	18598	18601	18624
		S/T	0.38	0.44	0.50	0.50	0.58	0.40	0.47	0.54	0.54	0.61	0.43	0.50	0.57	0.57	0.65	0.45	0.53	0.60	0.60	0.69
		PI	0.86	0.86	0.86	0.86	0.86	0.91	0.91	0.92	0.92	0.92	0.97	0.97	0.97	0.97	0.97	1.03	1.03	1.03	1.03	1.03
	77°F(25.0℃)	TC	16074	16096	16113	16114	16136	17043	17063	17080	17083	17104	18061	18085	18105	18108	18128	19149	19170	19191	19194	19218
		S/T	0.38	0.45	0.51	0.51	0.58	0.41	0.48	0.54	0.54	0.62	0.43	0.51	0.57	0.57	0.66	0.46	0.54	0.61	0.61	0.69
		PI	0.88	0.88	0.88	0.88	0.88	0.93	0.93	0.93	0.93	0.93	0.99	0.99	0.99	0.99	0.99	1.04	1.05	1.05	1.05	1.05
	82°F(27.8℃)	TC	16058	16079	16097	16097	16119	17026	17046	17063	17066	17086	18043	18066	18086	18090	18110	19130	19151	19171	19174	19198
		S/T	0.39	0.46	0.52	0.52	0.59	0.41	0.48	0.55	0.55	0.63	0.44	0.51	0.58	0.58	0.66	0.46	0.54	0.62	0.62	0.70
		PI	0.93	0.94	0.94	0.94	0.94	0.99	0.99	0.99	0.99	0.99	1.05	1.05	1.05	1.05	1.05	1.11	1.11	1.12	1.12	1.12
	86°F(30.0℃)	TC	15675	15697	15713	15714	15735	16620	16640	16656	16660	16679	17613	17636	17656	17659	17679	18674	18695	18715	18718	18741
		S/T	0.39	0.46	0.52	0.52	0.60	0.42	0.49	0.56	0.56	0.63	0.44	0.52	0.59	0.59	0.67	0.47	0.55	0.62	0.62	0.71
		PI	1.04	1.04	1.04	1.04	1.05	1.10	1.11	1.11	1.11	1.11	1.17	1.17	1.17	1.17	1.18	1.24	1.24	1.24	1.24	1.25
	95°F(35.0℃)	TC	14815	14835	14851	14852	14872	15708	15727	15742	15745	15764	16646	16668	16687	16690	16708	17649	17669	17688	17691	17713
		S/T	0.39	0.46	0.52	0.52	0.60	0.42	0.49	0.56	0.56	0.63	0.44	0.52	0.59	0.59	0.67	0.47	0.55	0.62	0.62	0.71
		PI	1.28	1.29	1.29	1.29	1.29	1.36	1.36	1.36	1.36	1.37	1.44	1.44	1.45	1.45	1.45	1.53	1.53	1.53	1.53	1.54
	104°F(40.0℃)	TC	13227	13244	13259	13259	13277	14024	14040	14054	14057	14074	14862	14881	14898	14900	14917	15757	15774	15791	15794	15813
		S/T	0.40	0.47	0.54	0.54	0.61	0.43	0.50	0.57	0.57	0.65	0.45	0.53	0.60	0.60	0.69	0.48	0.56	0.64	0.64	0.73
		PI	1.29	1.29	1.29	1.29	1.29	1.37	1.37	1.37	1.37	1.37	1.45	1.45	1.45	1.45	1.45	1.54	1.54	1.54	1.54	1.54

Manufacturer reserves the right to change, at any time, specifications and designs without notice and without obligations.

Table 10: Cooling Performance 24K (Continued)

AIRFLOW (CFM)	OUTDOOR DB °F (℃)	ID WB°F (℃)	60.8°F(16.0℃)					64.4°F(18.0℃)					67°F(19.4℃)					71.6°F(22.0℃)				
		ID DB°F (℃)	73.4°F (23.0℃)	77.0°F (25.0℃)	80.0°F (26.7℃)	80.6°F (27.0℃)	84.2°F (29.0℃)	73.4°F (23.0℃)	77.0°F (25.0℃)	80.0°F 26.7℃)	80.6°F (27.0℃)	84.2°F (29.0℃)	73.4°F (23.0℃)	77.0°F (25.0℃)	80.0°F (26.7℃)	80.6°F (27.0℃)	84.2°F (29.0℃)	73.4°F (23.0℃)	77.0°F(25.0℃)	80.0°F (26.7℃)	80.6°F (27.0℃)	84.2°F (29.0℃)
471	110°F(43.0℃)	TC	12274	12290	12303	12304	12321	13013	13029	13042	13044	13060	13791	13809	13824	13827	13842	14622	14638	14654	14656	14674
		S/T	0.42	0.49	0.56	0.56	0.64	0.44	0.52	0.59	0.59	0.67	0.47	0.55	0.63	0.63	0.71	0.50	0.58	0.66	0.66	0.76
		PI	1.29	1.29	1.30	1.30	1.30	1.37	1.37	1.37	1.37	1.38	1.45	1.45	1.46	1.46	1.46	1.54	1.54	1.54	1.54	1.55
	115°F(46.0℃)	TC	11049	11064	11076	11077	11092	11715	11729	11741	11743	11757	12415	12431	12445	12447	12461	13163	13177	13192	13194	13210
		S/T	0.42	0.50	0.56	0.56	0.64	0.45	0.53	0.60	0.60	0.68	0.48	0.56	0.63	0.63	0.72	0.50	0.59	0.67	0.67	0.77
		PI	1.26	1.26	1.26	1.26	1.26	1.33	1.33	1.34	1.34	1.34	1.41	1.41	1.42	1.42	1.42	1.50	1.50	1.50	1.50	1.50
	122°F(50.0℃)	TC	9417	9430	9440	9440	9453	9984	9996	10006	10008	10020	10581	10595	10606	10608	10620	11218	11231	11243	11245	11259
		S/T	0.43	0.51	0.58	0.58	0.66	0.46	0.54	0.61	0.61	0.70	0.49	0.57	0.65	0.65	0.74	0.52	0.60	0.69	0.69	0.78
		PI	1.21	1.21	1.21	1.21	1.21	1.28	1.28	1.29	1.29	1.29	1.36	1.36	1.36	1.36	1.36	1.44	1.44	1.44	1.44	1.45
500	5°F(-15.0℃)	TC	10786	10800	10812	10812	10827	11436	11449	11460	11463	11476	12119	12135	12148	12150	12164	12849	12863	12877	12879	12895
		S/T	0.42	0.49	0.56	0.56	0.63	0.44	0.52	0.59	0.59	0.67	0.47	0.55	0.62	0.62	0.71	0.50	0.58	0.66	0.66	0.75
		PI	1.11	1.11	1.11	1.11	1.11	1.17	1.17	1.18	1.18	1.18	1.24	1.24	1.25	1.25	1.25	1.32	1.32	1.32	1.32	1.32
	14°F(-10.0℃)	TC	14937	14957	14973	14974	14994	15837	15856	15871	15875	15893	16783	16805	16824	16827	16846	17794	17814	17833	17836	17858
		S/T	0.42	0.49	0.56	0.56	0.64	0.44	0.52	0.59	0.59	0.67	0.47	0.55	0.63	0.63	0.71	0.50	0.58	0.66	0.66	0.76
		PI	0.65	0.65	0.65	0.65	0.65	0.69	0.69	0.69	0.69	0.69	0.73	0.73	0.73	0.73	0.73	0.77	0.77	0.77	0.77	0.78
	17°F(-8.3℃)	TC	16321	16342	16360	16361	16383	17304	17325	17342	17345	17366	18338	18362	18382	18386	18406	19443	19464	19485	19488	19512
		S/T	0.42	0.49	0.56	0.56	0.64	0.44	0.52	0.59	0.59	0.68	0.47	0.55	0.63	0.63	0.72	0.50	0.59	0.67	0.67	0.76
		PI	0.50	0.50	0.50	0.50	0.50	0.53	0.53	0.53	0.53	0.53	0.56	0.56	0.56	0.56	0.56	0.59	0.59	0.59	0.59	0.59
	23°F(-5.0℃)	TC	16508	16531	16548	16549	16571	17503	17524	17541	17545	17566	18549	18573	18594	18597	18618	19667	19688	19709	19712	19737
		S/T	0.42	0.49	0.56	0.56	0.64	0.45	0.52	0.60	0.60	0.68	0.47	0.56	0.63	0.63	0.72	0.50	0.59	0.67	0.67	0.76
		PI	0.64	0.64	0.64	0.64	0.65	0.68	0.68	0.68	0.68	0.68	0.72	0.72	0.72	0.72	0.73	0.77	0.77	0.77	0.77	0.77
	35°F(1.7℃)	TC	16884	16907	16925	16926	16949	17902	17923	17940	17944	17965	18971	18996	19017	19020	19042	20114	20136	20158	20161	20186
		S/T	0.42	0.50	0.56	0.56	0.64	0.45	0.53	0.60	0.60	0.68	0.48	0.56	0.63	0.63	0.72	0.50	0.59	0.67	0.67	0.77
		PI	0.94	0.94	0.94	0.94	0.94	0.99	1.00	1.00	1.00	1.00	1.05	1.05	1.06	1.06	1.06	1.12	1.12	1.12	1.12	1.12
	41°F(5.0℃)	TC	16841	16863	16881	16882	16905	17856	17877	17894	17898	17919	18922	18947	18968	18972	18993	20062	20084	20106	20109	20134
		S/T	0.42	0.50	0.57	0.57	0.64	0.45	0.53	0.60	0.60	0.68	0.48	0.56	0.64	0.64	0.72	0.51	0.59	0.67	0.67	0.77
		PI	0.95	0.95	0.95	0.95	0.95	1.01	1.01	1.01	1.01	1.01	1.07	1.07	1.07	1.07	1.07	1.13	1.13	1.13	1.13	1.14
	47°F(8.3℃)	TC	16797	16820	16838	16839	16861	17809	17831	17848	17852	17873	18873	18898	18919	18923	18944	20011	20032	20054	20057	20082
		S/T	0.43	0.50	0.57	0.57	0.65	0.45	0.53	0.60	0.60	0.69	0.48	0.56	0.64	0.64	0.73	0.51	0.59	0.68	0.68	0.77
		PI	0.96	0.96	0.96	0.96	0.96	1.02	1.02	1.02	1.02	1.02	1.08	1.08	1.08	1.08	1.08	1.15	1.15	1.15	1.15	1.15
	50°F(10.0℃)	TC	16990	17013	17031	17032	17055	18014	18035	18053	18057	18078	19090	19115	19136	19140	19161	20241	20263	20285	20288	20313
		S/T	0.43	0.50	0.57	0.57	0.65	0.45	0.53	0.60	0.60	0.69	0.48	0.56	0.64	0.64	0.73	0.51	0.60	0.68	0.68	0.77
		PI	0.97	0.97	0.97	0.97	0.97	1.03	1.03	1.03	1.03	1.03	1.09	1.09	1.09	1.09	1.09	1.15	1.15	1.15	1.15	1.16

Manufacturer reserves the right to change, at any time, specifications and designs without notice and without obligations.

Table 10: Cooling Performance 24K (Continued)

AIRFLOW (CFM)	OUTDOOR DB °F (℃)	ID WB°F (℃)	60.8°F(16.0℃)					64.4°F(18.0℃)					67°F(19.4℃)					71.6°F(22.0℃)				
		ID DB°F (℃)	73.4°F (23.0℃)	77.0°F (25.0℃)	80.0°F (26.7℃)	80.6°F (27.0℃)	84.2°F (29.0℃)	73.4°F (23.0℃)	77.0°F (25.0℃)	80.0°F 26.7℃)	80.6°F (27.0℃)	84.2°F (29.0℃)	73.4°F (23.0℃)	77.0°F (25.0℃)	80.0°F (26.7℃)	80.6°F (27.0℃)	84.2°F (29.0℃)	73.4°F (23.0℃)	77.0°F(25.0℃)	80.0°F (26.7℃)	80.6°F (27.0℃)	84.2°F (29.0℃)
500	59°F(15.0℃)	TC	17569	17593	17612	17613	17636	18628	18650	18669	18672	18694	19741	19767	19789	19792	19814	20930	20953	20976	20979	21005
		S/T	0.43	0.50	0.57	0.57	0.65	0.46	0.53	0.61	0.61	0.69	0.48	0.57	0.64	0.64	0.73	0.51	0.60	0.68	0.68	0.78
		PI	0.99	0.99	0.99	0.99	0.99	1.04	1.05	1.05	1.05	1.05	1.11	1.11	1.11	1.11	1.11	1.17	1.17	1.18	1.18	1.18
	68°F(20.0℃)	TC	18148	18173	18192	18193	18218	19242	19265	19284	19288	19310	20392	20418	20441	20445	20467	21620	21644	21667	21671	21698
		S/T	0.44	0.52	0.59	0.59	0.67	0.47	0.55	0.62	0.62	0.71	0.50	0.58	0.66	0.66	0.75	0.53	0.62	0.70	0.70	0.80
		PI	1.00	1.00	1.01	1.01	1.01	1.06	1.07	1.07	1.07	1.07	1.13	1.13	1.13	1.13	1.13	1.20	1.20	1.20	1.20	1.20
	77°F(25.0℃)	TC	18727	18752	18773	18774	18799	19856	19879	19899	19903	19927	21042	21069	21093	21097	21120	22310	22334	22359	22362	22390
		S/T	0.45	0.52	0.60	0.60	0.68	0.47	0.56	0.63	0.63	0.72	0.50	0.59	0.67	0.67	0.76	0.53	0.62	0.71	0.71	0.81
		PI	1.02	1.02	1.02	1.02	1.03	1.08	1.08	1.09	1.09	1.09	1.15	1.15	1.15	1.15	1.15	1.22	1.22	1.22	1.22	1.22
	82°F(27.8℃)	TC	18708	18733	18753	18754	18780	19836	19859	19879	19883	19906	21021	21048	21071	21075	21099	22287	22311	22336	22339	22367
		S/T	0.45	0.53	0.60	0.60	0.69	0.48	0.56	0.64	0.64	0.73	0.51	0.60	0.68	0.68	0.77	0.54	0.63	0.72	0.72	0.82
		PI	1.09	1.09	1.09	1.09	1.09	1.15	1.16	1.16	1.16	1.16	1.22	1.22	1.23	1.23	1.23	1.30	1.30	1.30	1.30	1.30
	86°F(30.0℃)	TC	18263	18287	18307	18308	18332	19363	19386	19405	19409	19432	20520	20547	20570	20573	20596	21756	21780	21804	21807	21834
		S/T	0.46	0.54	0.61	0.61	0.70	0.49	0.57	0.65	0.65	0.74	0.52	0.60	0.69	0.69	0.78	0.55	0.64	0.73	0.73	0.83
		PI	1.21	1.22	1.22	1.22	1.22	1.29	1.29	1.29	1.29	1.29	1.36	1.37	1.37	1.37	1.37	1.45	1.45	1.45	1.45	1.45
	95°F(35.0℃)	TC	17260	17284	17302	17303	17326	18301	18322	18340	18344	18366	19394	19419	19441	19444	19466	20562	20585	20607	20610	20636
		S/T	0.46	0.54	0.61	0.61	0.70	0.49	0.57	0.65	0.65	0.74	0.52	0.60	0.69	0.69	0.78	0.55	0.64	0.73	0.73	0.83
		PI	1.50	1.50	1.50	1.50	1.50	1.59	1.59	1.59	1.59	1.59	1.68	1.68	1.69	1.69	1.69	1.78	1.78	1.79	1.79	1.79
	104°F(40.0℃)	TC	15410	15430	15447	15448	15469	16338	16358	16374	16377	16397	17315	17337	17356	17360	17379	18358	18378	18398	18401	18423
		S/T	0.47	0.55	0.63	0.63	0.71	0.50	0.58	0.66	0.66	0.76	0.53	0.62	0.70	0.70	0.80	0.56	0.66	0.75	0.75	0.85
		PI	1.50	1.50	1.51	1.51	1.51	1.59	1.60	1.60	1.60	1.60	1.69	1.69	1.69	1.69	1.69	1.79	1.79	1.79	1.79	1.80
	110°F(43.0℃)	TC	14299	14319	14334	14335	14354	15161	15179	15194	15197	15215	16067	16088	16106	16109	16127	17035	17053	17072	17075	17096
		S/T	0.49	0.57	0.65	0.65	0.74	0.52	0.61	0.69	0.69	0.78	0.55	0.64	0.73	0.73	0.83	0.58	0.68	0.77	0.77	0.88
		PI	1.51	1.51	1.51	1.51	1.51	1.60	1.60	1.60	1.60	1.60	1.69	1.69	1.70	1.70	1.70	1.79	1.80	1.80	1.80	1.80
	115°F(46.0℃)	TC	12873	12890	12904	12905	12922	13649	13665	13678	13681	13697	14464	14483	14499	14502	14518	15336	15352	15369	15371	15391
		S/T	0.49	0.58	0.66	0.66	0.75	0.52	0.61	0.70	0.70	0.79	0.55	0.65	0.74	0.74	0.84	0.59	0.69	0.78	0.78	0.89
		PI	1.46	1.47	1.47	1.47	1.47	1.55	1.56	1.56	1.56	1.56	1.65	1.65	1.65	1.65	1.65	1.75	1.75	1.75	1.75	1.75
	122°F(50.0℃)	TC	10971	10986	10998	10998	11013	11632	11646	11658	11660	11674	12327	12343	12357	12359	12373	13070	13084	13098	13100	13117
		S/T	0.50	0.59	0.67	0.67	0.77	0.53	0.63	0.71	0.71	0.81	0.57	0.66	0.76	0.76	0.86	0.60	0.70	0.80	0.80	0.91
		PI	1.41	1.41	1.41	1.41	1.42	1.49	1.50	1.50	1.50	1.50	1.58	1.59	1.59	1.59	1.59	1.68	1.68	1.68	1.68	1.69
706	5°F(-15.0℃)	TC	12566	12583	12596	12597	12614	13323	13339	13352	13355	13371	14119	14137	14153	14156	14172	14970	14986	15002	15005	15023
		S/T	0.49	0.57	0.65	0.65	0.74	0.51	0.60	0.69	0.69	0.78	0.55	0.64	0.73	0.73	0.83	0.58	0.68	0.77	0.77	0.88
		PI	1.29	1.29	1.29	1.29	1.29	1.37	1.37	1.37	1.37	1.37	1.45	1.45	1.45	1.45	1.45	1.54	1.54	1.54	1.54	1.54

Manufacturer reserves the right to change, at any time, specifications and designs without notice and without obligations.

Table 10: Cooling Performance 24K (Continued)

AIRFLOW (CFM)	OUTDOOR DB °F (°C)	ID WB°F (°C)	60.8°F(16.0°C)					64.4°F(18.0°C)					67°F(19.4°C)					71.6°F(22.0°C)				
		ID DB°F (°C)	73.4°F (23.0°C)	77.0°F (25.0°C)	80.0°F (26.7°C)	80.6°F (27.0°C)	84.2°F (29.0°C)	73.4°F (23.0°C)	77.0°F (25.0°C)	80.0°F 26.7°C)	80.6°F (27.0°C)	84.2°F (29.0°C)	73.4°F (23.0°C)	77.0°F (25.0°C)	80.0°F (26.7°C)	80.6°F (27.0°C)	84.2°F (29.0°C)	73.4°F (23.0°C)	77.0°F(25.0°C)	80.0°F (26.7°C)	80.6°F (27.0°C)	84.2°F (29.0°C)
706	14°F(-10.0°C)	TC	17402	17426	17444	17445	17469	18451	18473	18491	18495	18517	19553	19579	19600	19604	19626	20731	20754	20776	20780	20806
		S/T	0.49	0.57	0.65	0.65	0.74	0.52	0.61	0.69	0.69	0.78	0.55	0.64	0.73	0.73	0.83	0.58	0.68	0.77	0.77	0.88
		PI	0.76	0.76	0.76	0.76	0.76	0.80	0.80	0.80	0.80	0.80	0.85	0.85	0.85	0.85	0.85	0.90	0.90	0.90	0.90	0.90
	17°F(-8.3°C)	TC	19014	19040	19060	19061	19087	20160	20184	20204	20208	20232	21365	21392	21416	21420	21444	22652	22676	22701	22705	22733
		S/T	0.49	0.57	0.65	0.65	0.74	0.52	0.61	0.69	0.69	0.79	0.55	0.64	0.73	0.73	0.83	0.58	0.68	0.78	0.78	0.88
		PI	0.58	0.58	0.58	0.58	0.58	0.61	0.61	0.61	0.61	0.61	0.65	0.65	0.65	0.65	0.65	0.69	0.69	0.69	0.69	0.69
	23°F(-5.0°C)	TC	19233	19259	19280	19281	19307	20392	20416	20436	20440	20465	21610	21639	21663	21667	21691	22913	22937	22962	22966	22995
		S/T	0.49	0.58	0.65	0.65	0.75	0.52	0.61	0.69	0.69	0.79	0.55	0.65	0.74	0.74	0.84	0.58	0.69	0.78	0.78	0.89
		PI	0.75	0.75	0.75	0.75	0.75	0.79	0.80	0.80	0.80	0.80	0.84	0.84	0.84	0.84	0.85	0.89	0.89	0.89	0.89	0.90
	35°F(1.7°C)	TC	19671	19697	19718	19719	19746	20856	20881	20902	20906	20930	22102	22131	22156	22160	22184	23434	23459	23485	23489	23518
		S/T	0.49	0.58	0.66	0.66	0.75	0.52	0.61	0.70	0.70	0.79	0.55	0.65	0.74	0.74	0.84	0.59	0.69	0.78	0.78	0.89
		PI	1.09	1.09	1.09	1.09	1.10	1.16	1.16	1.16	1.16	1.16	1.23	1.23	1.23	1.23	1.23	1.30	1.30	1.30	1.30	1.31
	41°F(5.0°C)	TC	19620	19647	19668	19669	19695	20803	20827	20848	20852	20877	22045	22074	22099	22103	22127	23374	23399	23425	23428	23457
		S/T	0.49	0.58	0.66	0.66	0.75	0.52	0.61	0.70	0.70	0.80	0.56	0.65	0.74	0.74	0.84	0.59	0.69	0.78	0.78	0.89
		PI	1.11	1.11	1.11	1.11	1.11	1.17	1.17	1.18	1.18	1.18	1.24	1.24	1.25	1.25	1.25	1.32	1.32	1.32	1.32	1.32
	47°F(8.3°C)	TC	19570	19596	19617	19618	19644	20749	20773	20794	20798	20823	21989	22017	22042	22046	22070	23313	23339	23364	23368	23397
		S/T	0.50	0.58	0.66	0.66	0.75	0.53	0.62	0.70	0.70	0.80	0.56	0.65	0.74	0.74	0.85	0.59	0.69	0.79	0.79	0.90
		PI	1.12	1.12	1.12	1.12	1.12	1.19	1.19	1.19	1.19	1.19	1.26	1.26	1.26	1.26	1.26	1.33	1.34	1.34	1.34	1.34
	50°F(10.0°C)	TC	19794	19821	19842	19843	19870	20987	21012	21033	21037	21062	22241	22270	22295	22299	22324	23581	23607	23633	23636	23666
		S/T	0.50	0.58	0.66	0.66	0.76	0.53	0.62	0.70	0.70	0.80	0.56	0.66	0.75	0.75	0.85	0.59	0.70	0.79	0.79	0.90
		PI	1.13	1.13	1.13	1.13	1.13	1.19	1.20	1.20	1.20	1.20	1.27	1.27	1.27	1.27	1.27	1.34	1.34	1.35	1.35	1.35
	59°F(15.0°C)	TC	20469	20497	20519	20520	20547	21703	21728	21750	21754	21780	22999	23029	23055	23059	23085	24385	24411	24438	24442	24472
		S/T	0.50	0.59	0.67	0.67	0.76	0.53	0.62	0.71	0.71	0.81	0.56	0.66	0.75	0.75	0.86	0.60	0.70	0.80	0.80	0.91
		PI	1.15	1.15	1.15	1.15	1.15	1.22	1.22	1.22	1.22	1.22	1.29	1.29	1.29	1.29	1.29	1.37	1.37	1.37	1.37	1.37
	68°F(20.0°C)	TC	21144	21172	21195	21196	21224	22418	22444	22467	22471	22498	23757	23788	23815	23819	23846	25189	25216	25243	25247	25279
		S/T	0.51	0.60	0.69	0.69	0.78	0.54	0.64	0.73	0.73	0.83	0.58	0.68	0.77	0.77	0.88	0.61	0.72	0.82	0.82	0.93
		PI	1.17	1.17	1.17	1.17	1.17	1.24	1.24	1.24	1.24	1.24	1.31	1.32	1.32	1.32	1.32	1.39	1.39	1.40	1.40	1.40
	77°F(25.0°C)	TC	21818	21848	21871	21872	21902	23133	23160	23183	23188	23215	24515	24547	24574	24579	24606	25992	26020	26049	26053	26085
		S/T	0.52	0.61	0.69	0.69	0.79	0.55	0.65	0.74	0.74	0.84	0.59	0.69	0.78	0.78	0.89	0.62	0.73	0.83	0.83	0.94
		PI	1.19	1.19	1.19	1.19	1.19	1.26	1.26	1.26	1.26	1.27	1.34	1.34	1.34	1.34	1.34	1.42	1.42	1.42	1.42	1.42
	82°F(27.8°C)	TC	21796	21825	21849	21850	21879	23109	23137	23160	23164	23192	24490	24522	24549	24554	24581	25966	25994	26022	26026	26059
		S/T	0.53	0.62	0.70	0.70	0.80	0.56	0.66	0.75	0.75	0.85	0.59	0.70	0.79	0.79	0.90	0.63	0.74	0.84	0.84	0.95
		PI	1.27	1.27	1.27	1.27	1.27	1.34	1.35	1.35	1.35	1.35	1.42	1.43	1.43	1.43	1.43	1.51	1.51	1.51	1.51	1.52

Manufacturer reserves the right to change, at any time, specifications and designs without notice and without obligations.

Table 10: Cooling Performance 24K (Continued)

AIRFLOW (CFM)	OUTDOOR DB °F (℃)	ID WB°F (℃)	60.8°F(16.0℃)					64.4°F(18.0℃)					67°F(19.4℃)					71.6°F(22.0℃)				
		ID DB°F (℃)	73.4°F (23.0℃)	77.0°F (25.0℃)	80.0°F (26.7℃)	80.6°F (27.0℃)	84.2°F (29.0℃)	73.4°F (23.0℃)	77.0°F (25.0℃)	80.0°F 26.7℃)	80.6°F (27.0℃)	84.2°F (29.0℃)	73.4°F (23.0℃)	77.0°F (25.0℃)	80.0°F (26.7℃)	80.6°F (27.0℃)	84.2°F (29.0℃)	73.4°F (23.0℃)	77.0°F(25.0℃)	80.0°F (26.7℃)	80.6°F (27.0℃)	84.2°F (29.0℃)
706	86°F(30.0℃)	TC	21277	21305	21328	21329	21358	22559	22586	22608	22613	22639	23907	23938	23965	23969	23996	25347	25375	25402	25406	25438
		S/T	0.53	0.63	0.71	0.71	0.81	0.57	0.66	0.75	0.75	0.86	0.60	0.70	0.80	0.80	0.91	0.64	0.75	0.85	0.85	0.97
		PI	1.41	1.42	1.42	1.42	1.42	1.50	1.50	1.50	1.50	1.50	1.59	1.59	1.59	1.59	1.59	1.68	1.69	1.69	1.69	1.69
	95°F(35.0℃)	TC	20109	20136	20158	20159	20186	21321	21346	21367	21372	21397	22595	22624	22649	22654	22679	23956	23982	24008	24012	24042
		S/T	0.53	0.63	0.71	0.71	0.81	0.57	0.66	0.75	0.75	0.86	0.60	0.70	0.80	0.80	0.91	0.64	0.75	0.85	0.85	0.97
		PI	1.74	1.75	1.75	1.75	1.75	1.85	1.85	1.85	1.85	1.85	1.96	1.96	1.96	1.96	1.97	2.08	2.08	2.08	2.08	2.08
	104°F(40.0℃)	TC	17953	17977	17997	17997	18022	19035	19058	19076	19080	19103	20172	20198	20221	20225	20247	21388	21411	21434	21438	21464
		S/T	0.55	0.64	0.73	0.73	0.83	0.58	0.68	0.77	0.77	0.88	0.62	0.72	0.82	0.82	0.93	0.65	0.76	0.87	0.87	0.99
		PI	1.75	1.75	1.75	1.75	1.76	1.86	1.86	1.86	1.86	1.86	1.97	1.97	1.97	1.97	1.97	2.09	2.09	2.09	2.09	2.09
	110°F(43.0℃)	TC	16659	16682	16700	16701	16723	17663	17684	17702	17705	17726	18719	18743	18764	18767	18788	19847	19868	19890	19893	19918
		S/T	0.57	0.67	0.76	0.76	0.86	0.60	0.71	0.80	0.80	0.91	0.64	0.75	0.85	0.85	0.97	0.68	0.79	0.90	0.90	1.00
		PI	1.76	1.76	1.76	1.76	1.76	1.86	1.86	1.86	1.87	1.87	1.97	1.97	1.98	1.98	1.98	2.09	2.09	2.10	2.10	2.10
	115°F(46.0℃)	TC	14998	15018	15034	15035	15055	15901	15920	15936	15939	15958	16851	16873	16892	16895	16914	17867	17886	17906	17908	17931
		S/T	0.57	0.67	0.77	0.77	0.87	0.61	0.71	0.81	0.81	0.92	0.65	0.76	0.86	0.86	0.98	0.68	0.80	0.91	0.91	1.00
		PI	1.71	1.71	1.71	1.71	1.71	1.81	1.81	1.81	1.81	1.82	1.92	1.92	1.92	1.92	1.92	2.03	2.04	2.04	2.04	2.04
	122°F(50.0℃)	TC	12782	12799	12813	12813	12831	13552	13568	13582	13584	13600	14362	14380	14397	14399	14415	15227	15244	15260	15263	15282
		S/T	0.59	0.69	0.78	0.78	0.89	0.62	0.73	0.83	0.83	0.95	0.66	0.77	0.88	0.88	1.00	0.70	0.82	0.93	0.93	1.00
		PI	1.64	1.64	1.65	1.65	1.65	1.74	1.74	1.75	1.75	1.75	1.85	1.85	1.85	1.85	1.85	1.96	1.96	1.96	1.96	1.96

LEGEND

TC: Total Cooling Capacity (BTU/hr)
S/T: Sensible Cooling Capacity Ratio
PI: Power Input (kW)

Manufacturer reserves the right to change, at any time, specifications and designs without notice and without obligations.

APPLICATION DATA

Unit Selection

Select equipment that either matches or supports slightly more than the anticipated peak load. This provides better humidity control, fewer unit cycles, and less part-load operation.

For units used in spaces with high sensible loads, base equipment selection on unit sensible load, not on total anticipated load. Adjust for anticipated room wet bulb temperature to avoid undersizing the equipment.

Unit Mounting (Outdoor)

Refer to the unit's installation instructions for further details.

Unit leveling - For reliable operation, units should be level in all planes.

Clearance - Minimum clearance (see Fig. 5 — on page 8) must be provided for airflow. The condensing units are designed for free-flow application. Air inlets and outlets should not be restricted.

Unit location - A location which is convenient to installation and not exposed to strong winds. A location that can bear the weight of the outdoor unit and where the outdoor unit can be mounted in a level position.

Do not install the indoor or outdoor units in a location with special environmental conditions. For those applications, contact your sales representative.

System Operating Conditions

OPERATING RANGE MIN / MAX °F (°C)	
	Cooling
Outdoor DB	5 ~ 122 (-15 ~ 50)

NOTE: Reference the product installation instructions for more information.

Metering Devices

The outdoor unit utilizes a capillary tube to manage the connected fan coil's refrigerant flow.

Drain Connections

Install drains to meet the local sanitation codes.

Refrigerant Lines

General refrigerant line sizing:

1. The outdoor units are shipped with a full charge of R-454B refrigerant. All charges, line sizing, and capacities are based on runs of 25 ft. (7.6 m). For runs over 25 ft. (7.6 m), review the *Long Line Applications* section for the proper charge adjustments.
2. Refrigerant lines should not be buried in the ground. If it is necessary to bury the lines, do not bury more than 36−in (914 mm). Provide a minimum 6−in (152 mm) vertical rise to the service valves to prevent refrigerant migration.
3. Both lines must be insulated. Use a minimum of 1/2−in. (12.7 mm) thick insulation. Closed−cell insulation is recommended in all long−line applications.
4. Special consideration should be given to isolating the interconnecting tubing from the building structure. Isolate the tubing so vibration or noise is not transmitted into the structure.

Long Line Applications:

1. No change in line sizing is required.
2. Add refrigerant per the **Additional Charge** table .

UNIT SIZE	INDOOR UNIT METERING DEVICE	TOTAL LINE LENGTH FT(M)		ADDITIONAL CHARGE, OZ/FT. FT(M)				
		Min	Max	10-24.6 (3-7.5)	>24.6-82 (7.5-25)	>82-98.4 (25-30)	>98.4-164 (30-50)	>164-213.2 (50-65)
9	None	10 (3)	82(25)	None	0.16 (15)			
12								
18			98.4 (30)		0.16 (15)			
24			164 (50)		0.32			

WIRING

All wires must be sized per NEC (National Electrical Code) or CEC (Canadian Electrical Code) and local codes. Use Electrical Data table MCA (minimum circuit amps) and MOCP (maximum over current protection) to correctly size the wires and the disconnect fuse or breakers respectively.

Recommended Connection Method for Power and Communication Wiring:

The main power is supplied to the outdoor unit. The field supplied 14/3 stranded wire with ground with a 600 volt insulation rating, power/communication wiring from the outdoor unit to indoor unit consists of four (4) wires and provides the power for the indoor unit.

Two wires are line voltage AC power, one is communication wiring (S) and the other is a ground wire. Wiring between indoor and outdoor unit is polarity sensitive. The use of BX wire is NOT recommended.

If installed in a high Electromagnetic field (EMF) area and communication issues exists, a 14/2 stranded shielded wire can be used to replace L2/N and (S) between outdoor unit and indoor unit landing the shield onto ground in the outdoor unit only.

CAUTION

EQUIPMENT DAMAGE HAZARD

Failure to follow this caution may result in equipment damage or improper operation.

Wires should be sized based on NEC and local codes.

CAUTION

EQUIPMENT DAMAGE HAZARD

Failure to follow this caution may result in equipment damage or improper operation.

Be sure to comply with local codes while running wire from the indoor unit to the outdoor unit.

Every wire must be connected firmly. Loose wiring may cause the terminal to overheat or result in unit malfunction. A fire hazard may also exist. Ensure all wiring is tightly connected.

No wire should touch the refrigerant tubing, compressor or any moving parts.

Disconnecting means must be provided and shall be located within sight and readily accessible from the air conditioner.

Connecting cable with conduit shall be routed through the hole in the conduit panel.

Air Flow Data - Cooling Only

COOLING ONLY	12K (115 V)	9K (208/230V)	12K (208/230V)	18K (208/230V)	24K (208/230V)
Outdoor (CFM)	1059	1059	1059	1236	1354

Sound Data - Cooling Only

COOLING ONLY		12K (115 V)	9K (208/230 V)	12K (208/230 V)	18K (208/230 V)	24K (208/230 V)
Outdoor Sound Pressure Level	dB(A)	54	52	53	57	57

Outdoor Unit Sound Pressure Test Conditions

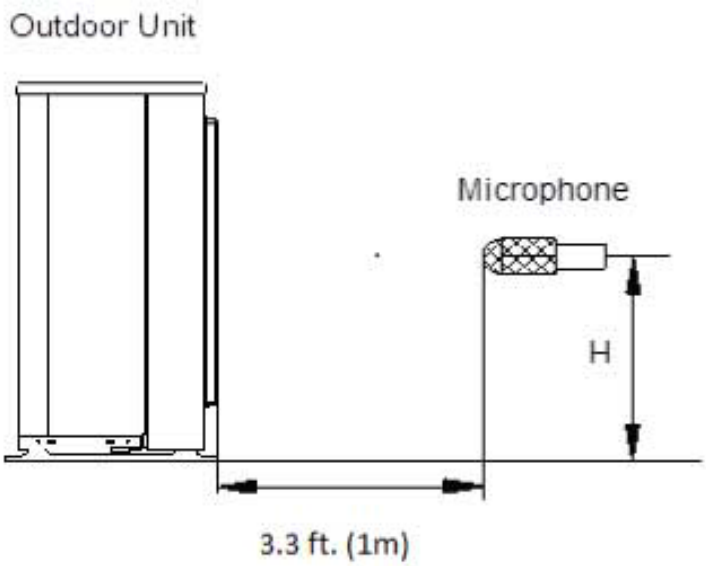

Fig. 7 — Outdoor Unit Sound Pressure Test Conditions

ELECTRICAL DATA - COOLING ONLY

Table 11: Electrical Data

OUTDOOR UNIT		12K 115V	9K	12K	18K	24K
		(115V)	(208/230V)	(208/230V)	(208/230V)	(208/230V)
MINIMUM CIRCUIT AMPACITY (MCA)	A	19	9.9	14	16	19
MAXIMUM OVERCURRENT PROTECTION AMPACITY (MOPA)	A	20	15	15	20	20
VOLTAGE-PHASE-FREQUENCY		115-1-60	208/230-1-60			
MAX – MIN VOLTAGE RANGE		127-104	253-187			
COOLING (WITH ENTRY TIER HIGH WALL CO IDU)						
RUNNING CURRENT	(A)	10.3	5.1	4.3	6.8	8.7
POWER CONSUMPTION	(W)	958	720	958	1549	2157

Fan and Motor Specifications - Cooling Only

Table 12: Fan and Motor Specifications

COOLING ONLY UNIT SIZE			12K 115V	9K	12K	18K	24K
OUTDOOR MODEL			D5CERAA12AAJ	D5CERAA12AAJ	D5CERAA12AAJ	D5CERAA12AAJ	D5CERAA12AAJ
POWER SUPPLY		V; Ph;Hz	115V;1 Ph;60HZ	208/230V; 1Ph;60HZ	208/230V; 1Ph;60HZ	208/230V; 1Ph;60HZ	208/230V; 1Ph;60HZ
COMPRESSOR SPECIFICATIONS	Model		KSK103D33UEZ3	KSK103D33UEZ3	KSK103D33UEZ3	KSN140D58UFZ	KSN140D58UFZ
	Type		ROTARY	ROTARY	ROTARY	ROTARY	ROTARY
	Brand		GMCC	GMCC	GMCC	GMCC	GMCC
	Capacity	W	2035/3255	2035/3255	2035/3255	4315	4315
		Btu/h	6943/11106	6943/11106	6943/11106	14723	14723
	Input	W	325/826	325/826	325/826	1090	1090
	Rated current	A	2.40/5.65	2.40/5.65	2.40/5.65	7.2	7.2
	Refrigerant Oil		ESTER OIL	ESTER OIL	ESTER OIL	ESTER OIL	ESTER OIL
	Oil Type		VG74	VG74	VG74	VG74	VG74
	Oil Charge	fl. Oz	10.48	10.48	10.48	14.88	14.88
OUTDOOR FAN SPECIFICATIONS	Material	-	Acrylonitrile Styrene +20%GF	Acrylonitrile Styrene +20%GF	Acrylonitrile Styrene +20%GF	Acrylonitrile Styrene +20%GF	Acrylonitrile Styrene +20%GF
	Type	-	ZL-415*129*8-3KN	ZL-415*129*8-3KN	ZL-415*129*8-3KN	ZL-421*133*8-3KN	ZL-434*144*8-3KN
	Diameter	inch	16.3	16.3	16.3	16.6	17.1
		mm	415	415	415	421	434
	Height	inch	5.1	5.1	5.1	5.2	5.7
		mm	129	129	129	133	144
OUTDOOR MOTOR SPECIFICATIONS	Model	-	ZKFN-34-10-1-9	ZKFN-34-10-1-9	ZKFN-34-10-1-9	ZKFN-34-10-1-9	ZKFN-34-10-1-9
	Type	-	DC	DC	DC	DC	DC
	Input	W	35.4	35.4	35.4	35.4	62.0
	Max. input	W	81.3	81.3	81.3	81.3	81.3
	Output	W	26.6	26.6	26.6	26.6	46.5
	FLA (The rated current of the conversion equipment)	A	0.7	0.5	0.34	0.45	0.62
	Rated HP	HP	0.04	0.04	0.04	0.04	0.06
	Range of current	Amps	0.57~0.85	0.57~0.85	0.57~0.85	0.57~0.85	0.57~0.85
	Rated current	Amps	0.62	0.62	0.62	0.62	0.75
	Speed	rev/min	850/700/600	800/700/600	850/700/600	810/700/450	950/700/600
	Rated RPM	rev/min	850	800	850	810	950
	Insulation class	-	E	E	E	E	E
	Safe class	-	IP24	IP24	IP24	IP24	IP24

Manufacturer reserves the right to change, at any time, specifications and designs without notice and without obligations.

WIRING DIAGRAMS

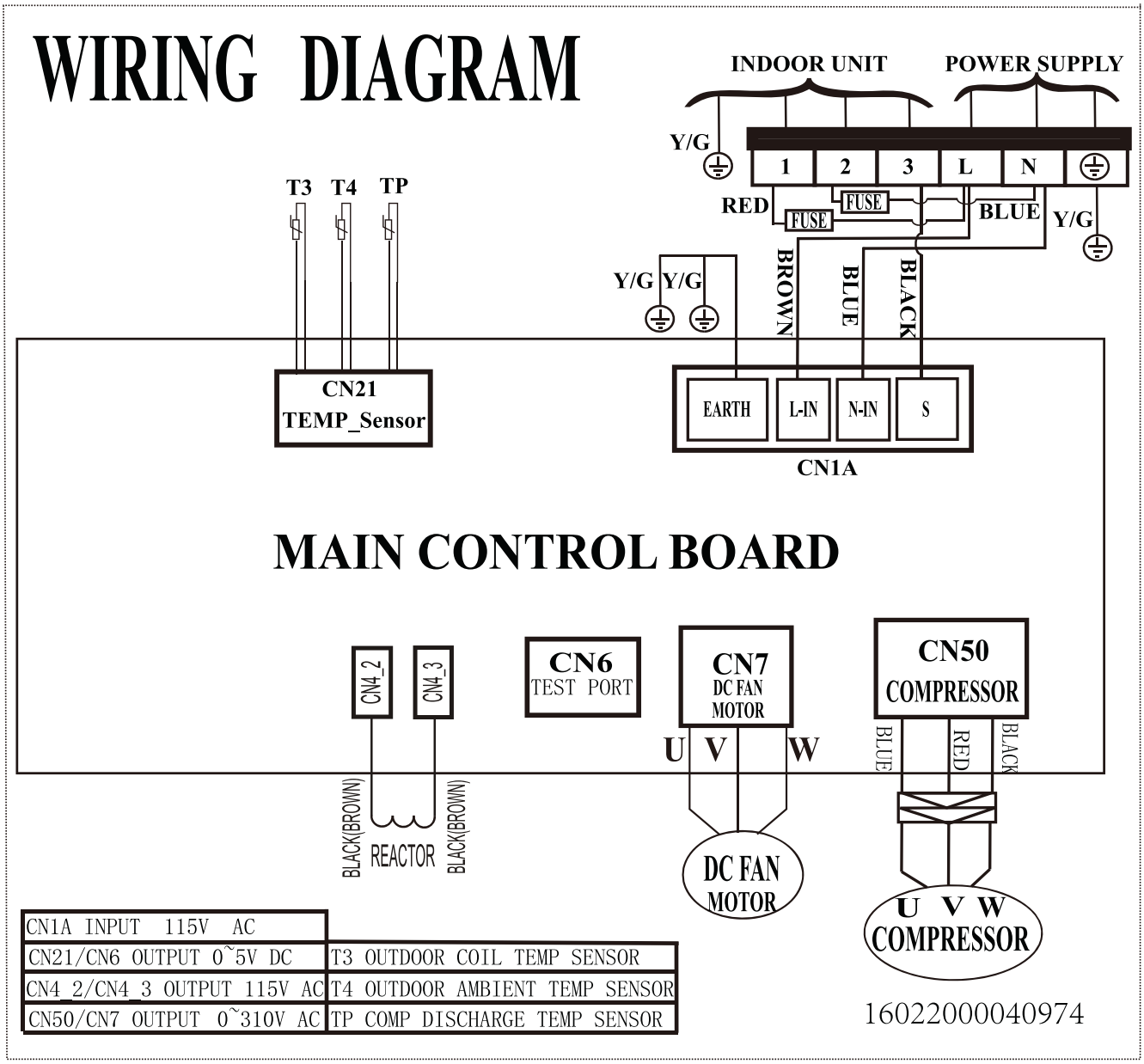

Fig. 8 — Wiring Diagram - Size 12K (115V)

WIRING DIAGRAMS (CONTINUED)

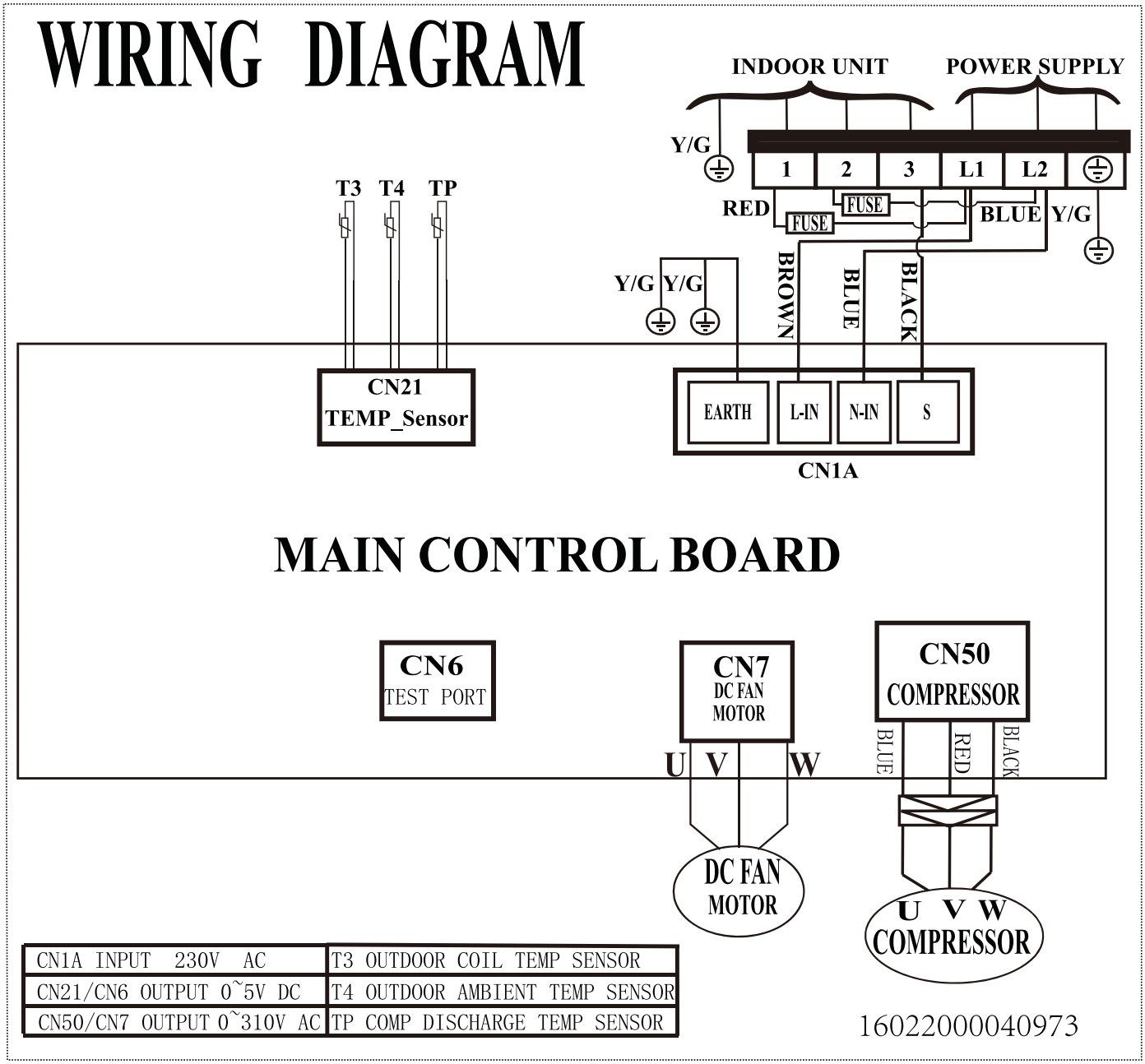

Fig. 9 — Wiring Diagram Sizes - 9-18K (208-230V)

WIRING DIAGRAMS (CONTINUED)

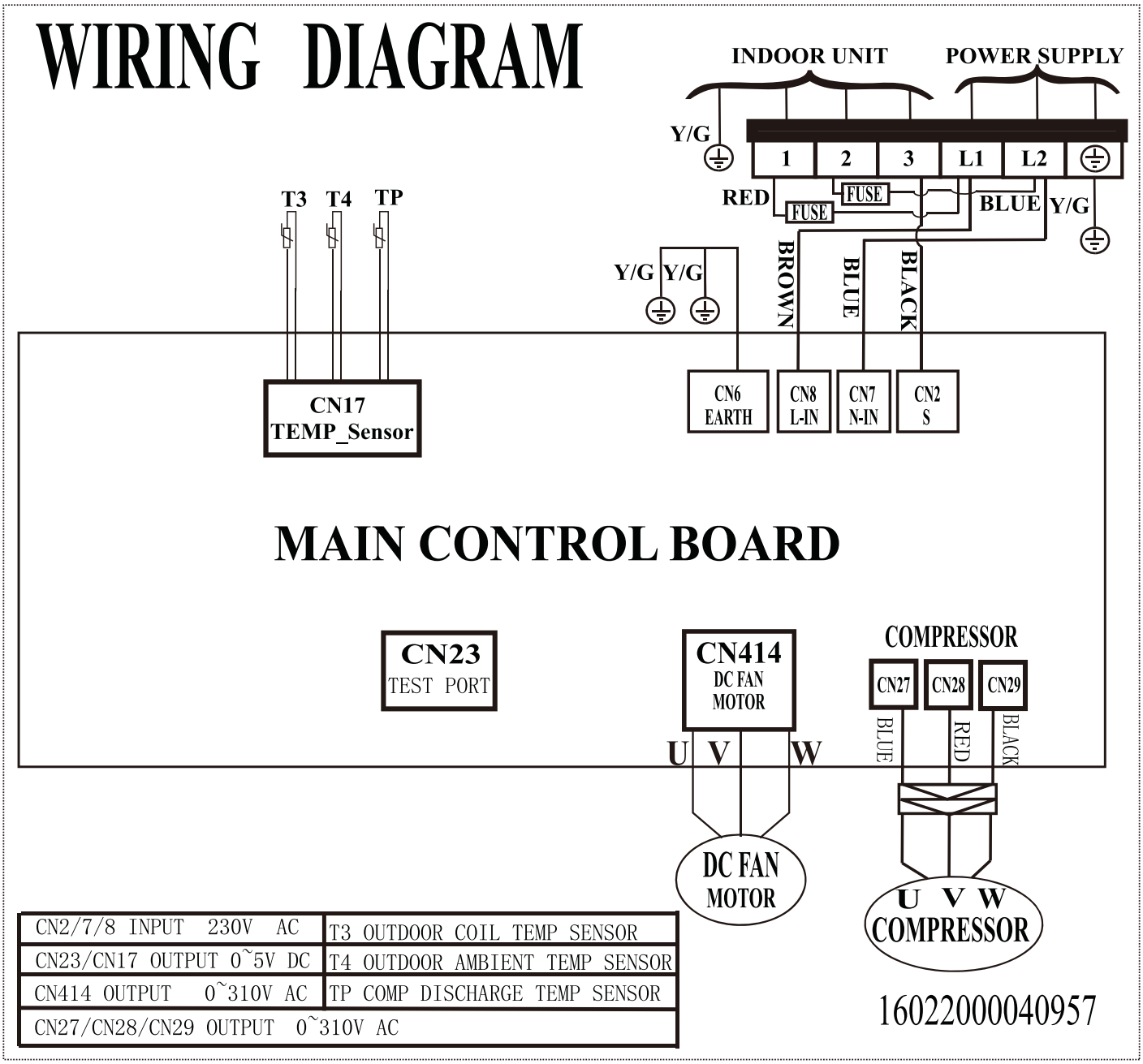

Fig. 10 — Wiring Diagram - Size 24K (230V)

GUIDE SPECIFICATIONS

HORIZONTAL DISCHARGE OUTDOOR UNITS

Size Range: 3/4 to 2 Ton Nominal Cooling Capacity Model Number: **D5CERAA**

Part 1 - GENERAL

1.01 System Description

1. Outdoor air-cooled split system compressor sections suitable for on-the-ground, rooftop, wall hung or balcony mounting. Units consist of a rotary compressor, an air-cooled coil, propeller-type draw-through outdoor fan, metering device(s), and a control box. Units discharge air horizontally as shown on the contract drawings. Units function as the outdoor component of an air-to-air condensing unit.
2. Units are to be used in a refrigeration circuit matched to ductless heat pump fan coil units.

1.02 Agency Listings

1. Unit construction complies with ANSI/ASHRAE 15, latest revision, and with the NEC.
2. Units are evaluated in accordance with UL standard 60335-2-40.
3. Units are listed in the CEC directory.
4. Unit cabinet is capable of withstanding 500-hour salt spray test per Federal Test Standard No. 141 (method 6061).
5. Air-cooled condenser coils are leak tested at 550 psig.

1.03 Delivery, Storage, And Handling

Units are shipped in one piece and are stored and handled per unit manufacturer's recommendations.

1.04 Warranty (For Inclusion By Specifying Engineer)

Part 2 - PRODUCTS

2.01 Equipment

A. **General:**

Factory assembled, single piece, air-cooled outdoor unit. Contained within the unit enclosure is all the factory wiring, piping, controls, and the compressor.

B. **Unit Cabinet:**

1. Unit cabinet is constructed of galvanized steel, bonderized and coated with a baked-enamel finish on the inside and outside.
2. Unit access panels is removable with minimal screws and provides full access to the compressor, fan, and control components.
3. The outdoor compartment is isolated and has an acoustic lining to assure quiet operation.

C. **Fans:**

1. Outdoor fans are the direct drive propeller type, and discharges air horizontally. Fans draw air through the outdoor coil.
2. Outdoor fan motors are totally enclosed, single phase motors with class E insulation and permanently lubricated ball bearings. Motor shall be protected by internal thermal overload protection.
3. The shaft has inherent corrosion resistance.
4. Fan blades are non-metallic and statically and dynamically balanced.
5. Outdoor fan openings are equipped with a PVC metal/mesh coated protection grille over the fan.

D. **Compressor:**

1. Compressor is the fully hermetic rotary type.
2. Compressor is equipped with an oil system, operating oil charge, and a motor.
3. Motor is NEMA rated class E, suitable for operation in a refrigerant atmosphere.
4. Compressor assembly is installed on rubber vibration isolators.

E. **Outdoor Coil:**

The coil is constructed of aluminum hydrophilic pre-coated fins mechanically bonded to seamless copper tubes, which are cleaned, dehydrated, and sealed.

F. **Refrigeration Components:**

Refrigerant circuit components include a brass external liquid line service valve with service gage port connections, a suction line service valve with a service gage connection port, service gage port connections on compressor suction and discharge lines with Schrader type fittings with brass caps, accumulator, reversing valve.

G. **Controls and Safeties:**

Operating controls and safeties are factory selected, assembled, and tested. The minimum control functions include the following:

1. Controls:
   - A time delay control sequence is provided standard through the fan coil board
   - Automatic outdoor fan motor protection.
2. Safeties:
   - System diagnostics
   - Compressor motor current and temperature overload protection
   - Outdoor fan failure protection.

H. **Electrical Requirements:**

1. Unit operates on single-phase, 60 Hz power at 115V for unit size 12 and 208/230V for unit sizes 09, 12, 18, 24 as specified.
2. Unit electrical power has a single point connection.
3. Unit Control voltage to the indoor fan coil is 0-15V DC.
4. All power and control wiring must be installed per NEC and all local electrical codes.
5. The unit has high and low voltage terminal block connections.

Manufacturer reserves the right to change, at any time, specifications and designs without notice and without obligations.

© 2025 Carrier. All rights reserved.

Manufacturer reserves the right to change, at any time, specifications and designs without notice and without obligations.