FMU5S, FMC5S

Multifamily Ceiling Mount Fan Coils (smaller depth) for Puron Advance™ (R-454B) Refrigerant Sizes 18 To 36, 1-1/2 To 3 Nominal Tons

Product Data

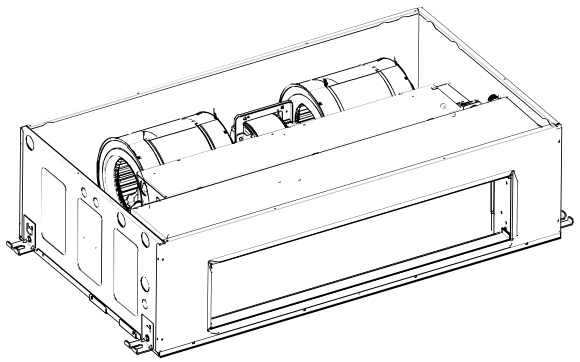

FMC5S – CASED

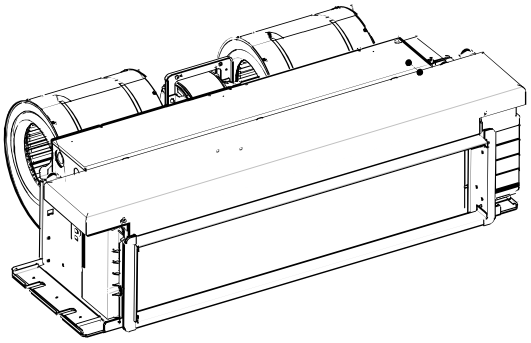

FMU5S – UNCASED

Fig. 1 – FMC5S, FMU5S

MULTIFAMILY CEILING MOUNT FAN COIL

- FMU5S and FMC5S 1-1/2, 2, 2-1/2, and 3 Tons

All Models

- Horizontal application only
- Accessory field-installed electric heat kits (**EHK3**C**) available in 3, 5, 6, 7.5, or 10 kW
- 40VA, 208/230V-1-60 transformer
- All models use Puron Advance™, R-454B refrigerant and have a hard-shutoff TXV metering device
- Adjustable condensate drain pan

FM(C,U)5S

- Horizontal return applications require field fabricated bottom cover
- Cabinets meet the requirement of 1.4% cabinet leakage rate when tested to ASHRAE Standard 193
- Cabinets insulated to prevent cabinet sweating
- Refrigerant lines and electrical connections can be run out the back or side of casing

Performance

- ECM motor on all FMU5S & FMC5S models
- Increased motor shaft diameter and improved blower housing for efficient air distribution
- Insulated cabinet for improved cabinet sweat and condensate management

Easy To Install Service

- Slab coil design
- Multiple electrical, refrigerant lineset and drain line entry for application flexibility
- Primary and secondary drain connections exit from the back or side of the cabinet
- Supports furred-down ceiling open return and ducted return applications
- Sweat connections for long term reliability
- Grooved aluminum tube / aluminum fin coils on models

Certified System ISO 9001

AHRI CERTIFIED www.ahridirectory.org

Use of the AHRI Certified TM Mark indicates a manufacturer's participation in the program. For verification of certification for individual products, go to www.ahridirectory.org.

WARRANTY

- Default 5-year parts limited warranty:
  - 10-year parts limited warranty with timely registration*. Equipment must be registered within 90 days of original installation, except in jurisdictions where warranty benefits cannot be conditioned on registration.
  - * Applies to original purchaser/homeowner and not available to subsequent owners, except in jurisdictions where laws dictate otherwise.

See Warranty certificate for complete details and restrictions.

Model	Tons	Nominal BTU	CFM (L/s)	Dimensions H x W x D in. (mm)	Operating Weight lbs. (kg)	Shipping Weight lbs. (kg)
UNCASED						
FMU5S1800AL	1-1/2	18,000	600 (283)	10-1/4 x 37 x 21-1/8 (260 x 940 x 537)	62.2 (28.2)	73.2 (33.2)
FMU5S2400AL	2	24,000	800 (378)			
FMU5S3000AL	2-1/2	30,000	1000 (472)	10-1/4x 49-1/4 x 21-1/8 (260 x 1250x 537)	76.1 (34.5)	88.6 (40.2)
FMU5S3600AL	3	36,000	1200 (566)			
CASED						
FMC5S1800AL	1-1/2	18,000	600 (283)	11-1/16 x 43-1/4 x 23-5/8 (281 x 1097 x 601)	91.27 (41.4)	101.9 (46.2)
FMC5S2400AL	2	24,000	800 (378)			
FMC5S3000AL	2-1/2	30,000	1000 (472)	11-1/16 x 55-7/16 x 23-5/8 (281 x 1407 x 601)	109.6 (49.7)	122.1 (55.4)
FMC5S3600AL	3	36,000	1200 (566)			

FAN COIL MODEL NUMBER NOMENCLATURE GUIDE

F	M	U	5	S	2400	A	L

F = Fan Coil

M = Multi-Family — **TYPE**

U = Uncased
C = Cased — **INSTALLATION TYPE**

5 = R-454B Refrigerant — **REFRIGERANT**

S = R-454B TXV & ECM Motor — **METERING DEVICE**

1800 = 18,000 BTUH = 1-1/2 tons
2400 = 24,000 BTUH = 2 tons
3000 = 30,000 BTUH = 2-1/2 tons
3600 = 36,000 BTUH = 3 tons — **NOMINAL CAPACITY**

A = Marketing Revision — **REVISION**

L = All Aluminum Coils — **SALES CODE / FEATURES**

ELECTRIC HEATER MODEL NUMBER IDENTIFICATION GUIDE

EHK	3	05	C

EHK = Electric Heater Kit

SALES CODE

03 = 3 kW
05 = 5 kW
06 = 6 kW
08 = 7.5 kW
10 = 10 kW — **NOMINAL HEAT VALUE**

Engineering Code

DIMENSIONS

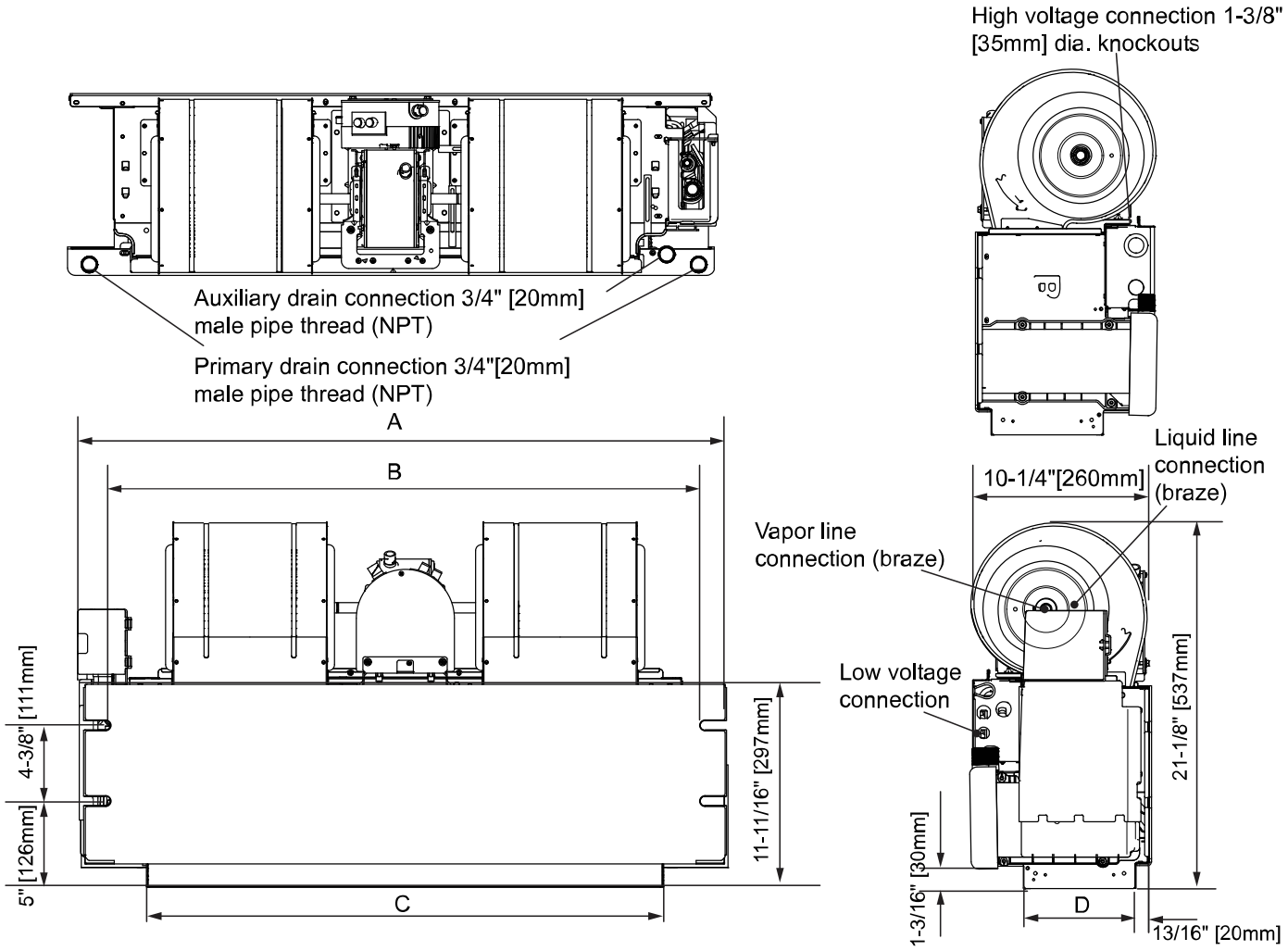

Fig. 2 – FMU5S – Uncased Horizontal Fan Coil Dimensional Drawing

Table 1 – FMU5S Dimensions

Model Size	DIMENSIONS - INCHES (mm)				Unit Operating Weight lbs (kg)
	”A”	”B”	”C”	”D”	
18	37 (940)	34-5/8 (880)	30 (760)	6-1/2 (165)	62.2 (28.2)
24					
30	49-1/4 (1250)	46-11/16 (1186)	41-15/16 (1065)	6-1/2 (165)	76.1 (34.5)
36					

Manufacturer reserves the right to change, at any time, specifications and designs without notice and without obligations.

DIMENSIONS

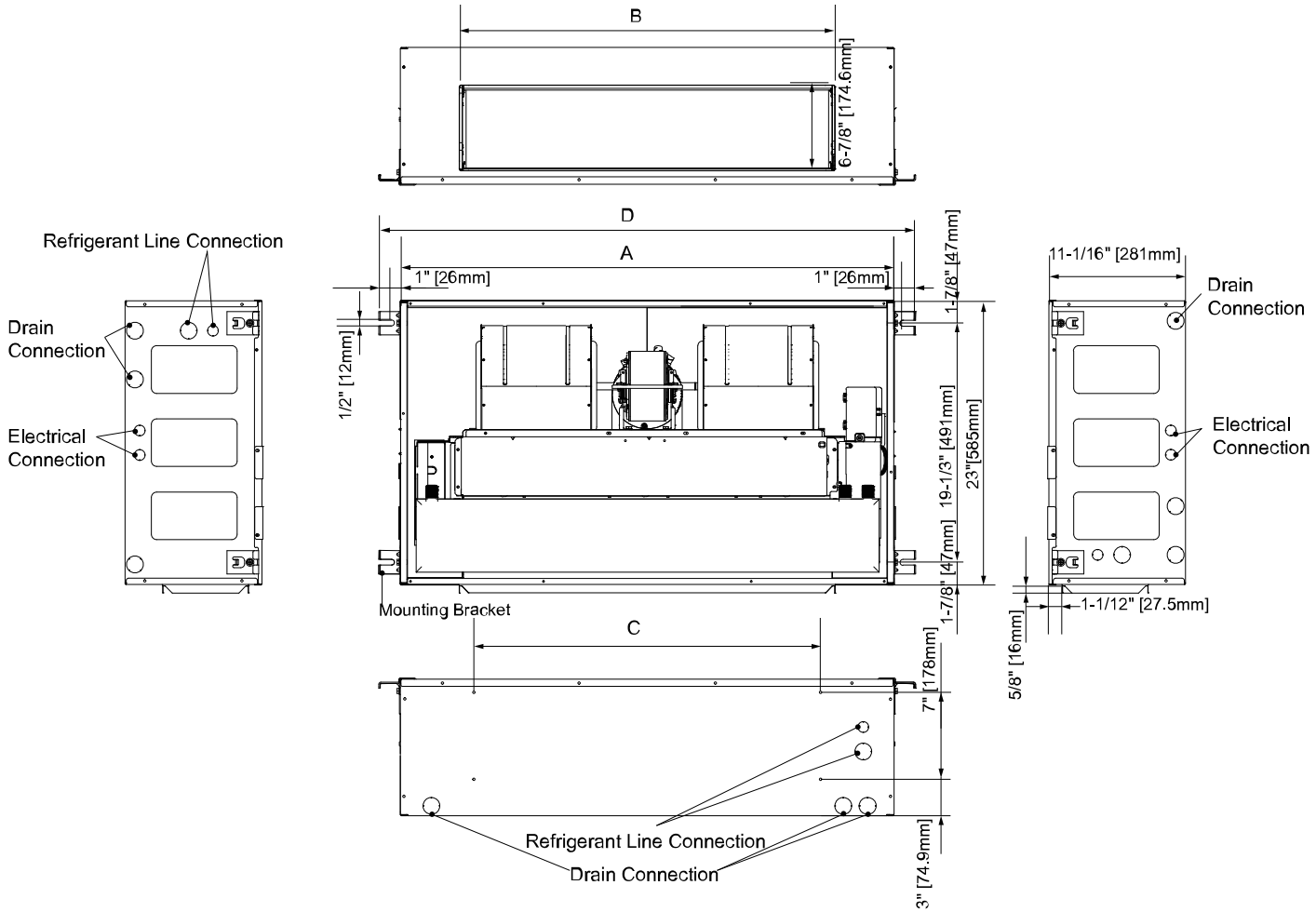

Fig. 3 – FMC5S - Cased Horizontal Fan Coil Dimensional Drawing

Table 2 – FMC5S Dimensions

Model Size	DIMENSIONS - INCHES (mm)				Unit Operating Weight lbs (kg)
	A	B	C	D	
18	40 (1014)	30-3/8 (771)	28 (711)	43-1/4 (1097)	91.27 (41.4)
24					
30	52 (1319)	42-3/8 (1077)	40 (1016)	55-7/16 (1407)	109.6 (49.7)
36					

Table 3 – Required Clearances

REQUIRED CLEARANCES - ALL MODELS - INCHES (mm)		
No Heaters	All Sides	0
	From Supply Duct	0
With Heaters	All Sides	0
	From Supply Duct	0

SPECIFICATIONS

Table 4 – Physical Data

	Unit Size			
FM(U,C)5S	**18**	**24**	**30**	**36**
Nominal Cooling Capacity (BTUH)	18,000	24,000	30,000	36,000
R-454B COIL				
Puron Advance® (R-454B) - Refrigerant Metering Device	TXV	TXV	TXV	TXV
Coil Configuration	Slab Coil			
BLOWER & MOTOR				
Air Discharge	Horizontal			
Blower Type	Dual Blower Direct Drive			
CFM (Nominal)	500	730	760	1220
Motor Type	ECM	ECM	ECM	ECM
Motor HP	1/3	1/3	1/3	1/3
Rated RPM	1800	1800	1800	1800
Motor Speeds	4	4	4	4
FILTER				
Field Installed - in. (mm)	Qty. 2- 16x20x1 (406x508x25)	Qty. 2- 16x20x1 (406x508x25)	Qty. 2- 20x20x1 (508x508x25)	Qty. 2- 20x20x1 (508x508x25)
CONNECTIONS (Sweat)				
Suction - in. (mm)	3/4 in. (19 mm)			
Liquid - in. (mm)	3/8 in. (9.5 mm)			
Condensate (MPT) - in. (mm)	3/4 in. (19 mm)			
ELECTRICAL DATA				
Voltage	208/230	208/230	208/230	208/230
Hertz	60	60	60	60
Minimum Circuit Ampacity	3.8	3.8	3.8	3.8
Maximum Circuit Protector	15 (A)	15 (A)	15 (A)	15 (A)

Table 5 – Required CFM Range

CFM		
Size	**Min**	**Max**
18	450	675
24	600	900
30	750	1125
36	900	1350

Manufacturer reserves the right to change, at any time, specifications and designs without notice and without obligations.

PERFORMANCE DATA

Table 6 – ECM - SELECTING HEAT PUMP SPEED OF ECM MOTOR (Cased/Uncased, Back Return)

Model	Motor Speed	CFM Wet Coil without Filter or Electric Heat, Cased, Back Return							
		External Static Pressure-Inches W.C. (kPa)							
		0 (0)	0.1 (.025)	0.2 (.050)	0.3 (.075)	0.38 (.095)	0.4 (.100)	0.5 (.125)	0.6 (.150)
18K	Tap (2) - Factory	709	658	599	543	500	489	451	411
	Tap (3)	859	814	773	728	684	676	631	585
	Tap (4)	899	857	817	775	733	723	679	636
	Tap (5)	1094	1057	1020	985	958	950	921	868
24K	Tap (2)	709	658	599	543	500	489	451	411
	Tap (3)	859	814	773	728	684	676	631	585
	Tap (4) - Factory	899	857	817	775	733	723	679	636
	Tap (5)	1094	1057	1020	985	958	950	921	868
30K	Tap (2)	910	842	787	724	676	668	614	561
	Tap (3) - Factory	992	932	871	805	766	755	701	654
	Tap (4)	1191	1140	1087	1043	1009	999	937	985
	Tap (5)	1392	1339	1298	1251	1217	1206	1165	1126
36K	Tap (2)	910	842	787	724	676	668	614	561
	Tap (3)	992	932	871	805	766	755	701	654
	Tap (4) - Factory	1191	1140	1087	1043	1009	999	937	985
	Tap (5)	1392	1339	1298	1251	1217	1206	1165	1126

- Shaded boxes represent airflow outside the required 300-450 cfm/ton.

Tap 1 not available

1. Airflow data is without filter or electric heat accessory. Heater adds 0.05-in. static.
2. Use wet coil data for determining cooling airflow.
3. Accessory louver panel adds 0.05-in. Static.
4. When only electric heater is working, 300 SCFM for each ton is sufficient except 30 K with 10 kW heat (≥ 900 SCFM) and 18/24 K with 10 kW heat (≥ 660 SCFM)

Table 7 – ECM - SELECTING HEAT PUMP SPEED OF ECM MOTOR (Cased, Bottom Return)

Model	Motor Speed	CFM Wet Coil without Filter or Electric Heat, Cased, Bottom Return							
		External Static Pressure-Inches W.C. (kPa)							
		0 (0)	0.1 (.025)	0.2 (.050)	0.3 (.075)	0.38 (.095)	0.4 (.100)	0.5 (.125)	0.6 (.150)
18K	Tap (2) - Factory	709	658	599	543	500	489	451	411
	Tap (3)	859	814	773	728	684	676	631	585
	Tap (4)	899	857	817	775	733	723	679	636
	Tap (5)	1094	1057	1020	985	958	950	921	868
24K	Tap (2)	709	658	599	543	500	489	451	411
	Tap (3)	859	814	773	728	684	676	631	585
	Tap (4) - Factory	899	857	817	775	733	723	679	636
	Tap (5)	1094	1057	1020	985	958	950	921	868
30K	Tap (2)	910	842	787	724	676	668	614	561
	Tap (3) - Factory	992	932	871	805	766	755	701	654
	Tap (4)	1191	1140	1087	1043	1009	999	937	985
	Tap (5)	1392	1339	1298	1251	1217	1206	1165	1126
36K	Tap (2)	910	842	787	724	676	668	614	561
	Tap (3)	992	932	871	805	766	755	701	654
	Tap (4) - Factory	1191	1140	1087	1043	1009	999	937	985
	Tap (5)	1392	1339	1298	1251	1217	1206	1165	1126

- Shaded boxes represent airflow outside the required 300-450 cfm/ton.

Tap 1 not available

1. Airflow data is without filter or electric heat accessory. Heater adds 0.05-in. static.
2. Use wet coil data for determining cooling airflow.
3. Accessory louver panel adds 0.05-in. Static.
4. When only electric heater is working, 300 SCFM for each ton is sufficient except 30 K with 10 kW heat (≥ 900 SCFM) and 18/24 K with 10 kW heat (≥ 660 SCFM)

Manufacturer reserves the right to change, at any time, specifications and designs without notice and without obligations.

PERFORMANCE DATA (cont.)

Table 8 – Gross Cooling Capacities (MBH)

INDOOR COIL AIR		SATURATED TEMPERATURE LEAVING EVAPORATOR (°F)														
		35			40			45			50			55		
CFM	EWB	TC	SHC	BF	TC	SHC	BF	TC	SHC	BF	TC	SHC	BF	TC	SHC	BF
FM(C,U)5S1800AL																
525	72	45.91	20.59	0.04	39.71	17.56	0.05	33.51	14.79	0.06	27.30	12.27	0.07	21.10	9.95	0.09
	67	39.71	22.61	0.05	33.51	19.39	0.06	27.30	16.46	0.07	21.10	13.79	0.08	14.89	11.35	0.11
	62	33.51	24.12	0.05	27.30	20.76	0.07	21.10	17.71	0.08	14.89	14.94	0.11	8.69	12.40	0.17
600	72	49.34	21.96	0.05	42.68	18.83	0.05	36.01	15.95	0.06	29.34	13.30	0.07	22.67	10.86	0.09
	67	42.68	24.39	0.05	36.01	21.05	0.06	29.34	17.99	0.07	22.67	15.18	0.09	16.00	12.59	0.12
	62	36.01	26.29	0.06	29.34	22.78	0.07	22.67	19.58	0.09	16.00	16.64	0.12	9.34	13.94	0.18
675	72	55.18	24.55	0.05	47.72	21.05	0.05	40.27	17.84	0.06	32.81	14.89	0.07	25.35	12.16	0.09
	67	47.72	27.29	0.05	40.27	23.56	0.06	32.81	20.15	0.07	25.35	17.02	0.09	17.90	14.13	0.12
	62	40.27	29.44	0.06	32.81	25.53	0.07	25.35	21.96	0.09	17.90	18.67	0.12	10.44	15.66	0.18
INDOOR COIL AIR		SATURATED TEMPERATURE LEAVING EVAPORATOR (°F)														
		35			40			45			50			55		
CFM	EWB	TC	SHC	BF	TC	SHC	BF	TC	SHC	BF	TC	SHC	BF	TC	SHC	BF
FM(C,U)5S2400AL																
700	72	58.85	26.26	0.05	50.90	22.47	0.05	42.94	19.00	0.06	34.99	15.81	0.07	27.04	12.88	0.09
	67	50.90	29.04	0.05	42.94	25.01	0.06	34.99	21.32	0.07	27.04	17.95	0.09	19.09	14.85	0.12
	62	42.94	31.19	0.06	34.99	26.97	0.07	27.04	23.11	0.08	19.09	19.59	0.11	11.13	16.36	0.18
800	72	63.39	28.12	0.05	54.83	24.18	0.06	46.26	20.55	0.06	37.69	17.20	0.08	29.13	14.09	0.09
	67	54.83	31.45	0.05	46.26	27.23	0.06	37.69	23.36	0.07	29.13	19.80	0.09	20.56	16.50	0.12
	62	46.26	34.10	0.06	37.69	29.67	0.07	29.13	25.60	0.09	20.56	21.86	0.12	11.99	18.41	0.18
900	72	70.72	31.35	0.05	61.17	26.97	0.06	51.61	22.94	0.06	42.05	19.22	0.08	32.49	15.76	0.09
	67	61.17	35.11	0.05	51.61	30.43	0.06	42.05	26.13	0.07	32.49	22.16	0.09	22.94	18.49	0.12
	62	51.61	38.13	0.06	42.05	33.20	0.07	32.49	28.68	0.09	22.94	24.51	0.12	13.38	20.67	0.18
INDOOR COIL AIR		SATURATED TEMPERATURE LEAVING EVAPORATOR (°F)														
		35			40			45			50			55		
CFM	EWB	TC	SHC	BF	TC	SHC	BF	TC	SHC	BF	TC	SHC	BF	TC	SHC	BF
FM(C,U)5S3000AL																
875	72	65.38	28.89	0.05	56.54	24.96	0.06	47.71	21.31	0.07	38.87	17.93	0.08	30.04	14.79	0.10
	67	56.54	32.66	0.06	47.71	28.44	0.06	38.87	24.54	0.08	30.04	20.93	0.10	21.20	17.58	0.13
	62	47.71	35.76	0.06	38.87	31.30	0.08	30.04	27.18	0.09	21.20	23.37	0.12	12.37	19.85	0.19
1000	72	73.41	32.42	0.05	63.49	28.04	0.06	53.57	23.98	0.07	43.65	20.21	0.08	33.73	16.69	0.10
	67	63.49	36.77	0.06	53.57	32.07	0.07	43.65	27.72	0.08	33.73	23.68	0.10	23.81	19.93	0.13
	62	53.57	40.36	0.06	43.65	35.39	0.08	33.73	30.79	0.09	23.81	26.54	0.13	13.89	22.59	0.19
1125	72	81.20	35.84	0.05	70.23	31.04	0.06	59.26	26.58	0.07	48.28	22.43	0.08	37.31	18.56	0.10
	67	70.23	40.78	0.06	59.26	35.62	0.07	48.28	30.84	0.08	37.31	26.40	0.10	26.34	22.26	0.13
	62	59.26	44.89	0.06	48.28	39.42	0.08	37.31	34.36	0.10	26.34	29.67	0.13	15.36	25.31	0.20
INDOOR COIL AIR		SATURATED TEMPERATURE LEAVING EVAPORATOR (°F)														
		35			40			45			50			55		
CFM	EWB	TC	SHC	BF	TC	SHC	BF	TC	SHC	BF	TC	SHC	BF	TC	SHC	BF
FM(C,U)5S3600AL																
1050	72	75.80	33.45	0.05	65.55	28.97	0.06	55.31	24.81	0.07	45.07	20.94	0.08	34.83	17.32	0.10
	67	65.55	38.06	0.06	55.31	33.25	0.07	45.07	28.78	0.08	34.83	24.64	0.10	24.58	20.78	0.13
	62	55.31	41.90	0.06	45.07	36.79	0.08	34.83	32.07	0.10	24.58	27.69	0.13	14.34	23.62	0.20
1200	72	85.18	37.58	0.05	73.67	32.59	0.06	62.16	27.95	0.07	50.65	23.62	0.08	39.14	19.57	0.10
	67	73.67	42.89	0.06	62.16	37.52	0.07	50.65	32.54	0.08	39.14	27.90	0.10	27.63	23.57	0.13
	62	62.16	47.34	0.07	50.65	41.64	0.08	39.14	36.36	0.10	27.63	31.46	0.13	16.12	26.89	0.20
1350	72	94.32	41.60	0.05	81.57	36.12	0.06	68.83	31.01	0.07	56.08	26.25	0.08	43.33	21.78	0.10
	67	81.57	47.62	0.06	68.83	41.72	0.07	56.08	36.23	0.08	43.33	31.12	0.10	30.59	26.34	0.14
	62	68.83	52.69	0.07	56.08	46.42	0.08	43.33	40.60	0.10	30.59	35.19	0.13	17.84	30.14	0.20

Manufacturer reserves the right to change, at any time, specifications and designs without notice and without obligations.

PERFORMANCE DATA (cont.)

Table 9 – Sensible Capacity (SHC) Correction Factor

BYPASS FACTOR	ENTERING AIR DRY-BULB TEMPERATURE (°F)					
	79	78	77	76	75	Under 75
	81	82	83	84	85	Over 85
	ENTERING AIR DRY-BULB TEMPERATURE (°C)					
	26	25	25	24	24	Under 75
	27	28	28	29	29	Over 85
	CORRECTION FACTOR					
0.10	0.98	1.96	2.94	3.92	4.91	Use formula shown below
0.20	0.87	1.74	2.62	3.49	4.36	
0.30	0.76	1.53	2.29	3.05	3.82	

Interpolation is permissible.. Correction Factor = 1.09 x (1 - BF) x (db - 80).

NOTES:

1. Contact manufacturer for cooling capacities at conditions other than shown in table.
2. Formulas:
   Leaving db = entering db - $\frac{\text{sensible heat cap.}}{1.09 \times \text{CFM}}$
   Leaving wb = wb corresponding to enthalpy of air leaving coil (h_{lwb})
   $h_{lwb} = h_{ewb} - \frac{\text{total capacity (Btuh)}}{4.5 \times \text{CFM}}$
   where h_{ewb} = enthalpy of air entering coil. Direct interpolation is permissible.
   Do not extrapolate.
3. SHC is based on 80°F (27°C) db temperature of air entering coil.
   Below 80°F (27°C) db, subtract (Correction Factor x CFM) from SHC.
   Above 80°F (27°C) db, add (Correction Factor x CFM) to SHC.
4. Bypass Factor = 0 indicates no psychometric solution.
   Use bypass factor of next lower EWB for approximation.

Table 10 – Sound Data

UNIT SIZE		18K	24K	30K	36K
Indoor Sound Pressure Level*	dBA High	54	54	57	57

UNIT SIZE	CONDITIONS		OCTAVE BAND CENTER FREQUENCY						
	CFM	Ext Static Pressure	63	125	250	500	1000	2000	4000
18	985	0.3	52.1	58.3	59.6	53.3	52.4	49.8	46.2
24									
30	1251	0.3	52.6	58.8	60.2	53	52.2	50.6	44.7
36									

Estimated Sound Power†	dBm High	71	71	72	72

*. Tested sound pressure data per testing setup shown below. Complies with AHRI Standard 260-IP-2017.
†. Estimated sound power data is calculated based on ISO 3741:2010.

SOUND TESTING MEASUREMENT SET-UP

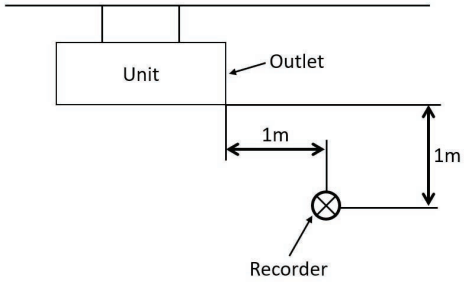

PERFORMANCE DATA (cont.)

Table 11 – Optional Field-Installed Electric Heat Packages

HEATER PART NUMBER WITH TDR	SIZES USED WITH	NOMINAL kw @ 240V	HEATER VOLTS-PHASE (60 Hz)	HEATER CAPACITY (MBH)		HEATER AMPS		MIN. CIRCUIT AMPACITY		MAX. FUSE OR BREAKER (HACR) AMPACITY		APPROX. SHIP WGT. LBS. (kg)
				208	240	208	240	208	240	208	240	
EHK303C	All	3	208/240-1	7.8	10.2	10.8	12.5	17.3	19.4	20	20	10 (4.5)
EHK305C	All	5	208/240-1	12.9	17.1	18.03	20.8	26.3	29.8	30	30	10 (4.5)
EHK306C	All	6	208/240-1	15.4	20.5	21.63	25.0	30.8	35.0	35	35	10 (4.5)
EHK308C	All	7.5	208/240-1	19.1	25.6	27.0	31.3	37.5	42.9	50	50	10 (4.5)
EHK310C	All	10	208/240-1	24.6	32.8	34.6	40.0	47.0	53.8	60	60	10 (4.5)

Table 12 – Other Accessories

KIT NUMBER	DESCRIPTION	USED ON SIZES
KFAGP0101COV	Solid Access Panel, Small	18, 24
KFAGP0201COV	Solid Access Panel, Large	30, 36
KFAGP0101LGL	Louvered Access Panel with Filter Rack	18, 24
KFAGP0201LGL	Louvered Access Panel with Filter Rack	30, 36
AFALFGSML01A	Louvered Access Panel with Filter Rack, Small (Title 24 compliant)	18, 24
AFALFGLRG01A	Louvered Access Panel with Filter Rack, Large (Title 24 compliant)	30, 36
KFAET0150ETK	PVC Condensate Trap Kit (50 pack)	18, 24, 30, 36

Training

My Learning Center is your central location for professional residential HVAC training resources that help strengthen careers and businesses. We believe in providing high quality learning experiences both on line and in the classroom.

Access My Learning Center with your HVAC Partners credentials at www.mlctraining.com. Please contact us a mylearning@carrier.com with questions.

© 2026 Carrier. All rights reserved.

Manufacturer reserves the right to change, at any time, specifications and designs without notice and without obligations.