H5A1V
Variable Speed Air Conditioner with R-454B Refrigerant 2 to 5 Nominal Tons

PRODUCT DATA

Model H5A1V is a variable speed cooling product providing up to 21 SEER2 cooling efficiency. Lower speed operation is available when needed in cooling, for enhanced comfort and dehumidification.

This product has been designed and manufactured to meet Energy Star® criteria for energy efficiency when matched with appropriate coil components. Refer to the AHRI directory (www.ahridirectory.org) for the most up-to-date ratings information.

Industry leading Features / Benefits

Energy Efficiency
- Up to 21 SEER2, 12 EER2
- Indoor air quality accessories available

Sound
- Sound level as low as 55 dBA in low speed

Comfort
- Variable speed compressor with capacity range from 25-100%
- Air cooled variable speed drive
  - Ion™ Black System Control
  - Energy Tracking capability with the Ion™ Black System Control and latest software version
    (Energy Tracking has the ability to monitor and estimate the energy consumption of your Ion™ system.)

Reliability
- Non-ozone depleting, low global warming potential R-454B refrigerant
- Front-seating service valves
- High pressure switch
- Discharge and suction pressure transducer
- Filter drier (field installed)
- Internal stator heating function standard

Flexibility and Installation:
- Power-V™ Technology compatible
- 2 control wires to outdoor unit
- Minimum and maximum airflow adjustments
- Efficiency and comfort modes

Durability
Protection Package:
- Solid, durable sheet metal construction
- Baked-on, complete outer coverage, powder paint

Applications
- Cooling mode operation up to 125°F (51.7°C) outdoor ambient temperature.
- Long-line - up to 200 feet (61.0 m) equivalent length, up to 100 feet (30.5 m) condenser above evaporator, or up to 80 ft. (24.4 m) evaporator above condenser (See Long Line Guide for more information.)
- Low ambient cooling down to 0°F (-17.8°C) when enabled in Ion™ Black System Control.

MODEL NUMBER NOMENCLATURE

H	5	A	1	V	18	A	K	A	W	A
Brand **H** = Ion™ ICP Commercial	**Refrigerant** **5**= R-454B	**Type** **A** = AC	**SEER2** **1** = 21 SEER2	**OD Design Type** **V** = Variable Speed	**Nominal Capacity** **24** = 2 Tons **36** = 3 Tons **48** = 4 Tons **60** = 5 Tons	**Feature** A = Standard	**Voltage** K = 208/230-60-1	**Special Feature** A = Standard	**Region** W = Standard SW AC	**Major Series** A = Initial

Use of the AHRI Certified TM Mark indicates a manufacturer's participation in the program For verification of certification for individual products, go to www.ahridirectory.org.

Quality ISO 9001

This product has been designed and manufactured to meet Energy Star criteria for energy efficiency when matched with appropriate coil components. However, proper refrigerant charge and proper air flow are critical to achieve rated capacity and efficiency. Installation of this product should follow all manufacturing refrigerant charging and air flow instructions. **Failure to confirm proper charge and air flow may reduce energy efficiency and shorten equipment life.**

Catalog Ordering Numbers

Size	Model Number
24	H5A1V24AKAWA
36	H5A1V36AKAWA
48	H5A1V48AKAWA
60	H5A1V60AKAWA

Standard Features

FEATURES	Unit Size			
	24	**36**	**48**	**60**
R-454B Refrigerant	X	X	X	X
Variable Speed Rotary Compressor	X	X	X	X
Air-Cooling Variable Frequency Drive	X	X	X	X
Factory Provided, Field-Installed Filter Drier	X	X	X	X
Front-Seating Service Valves	X	X	X	X
In-unit Pressure and Temperature Protection	X	X	X	X
Suction and Discharge Pressure Transducers	X	X	X	X
High Pressure Switch	X	X	X	X
Utility Interface Connections	X	X	X	X
Enhanced Diagnostics using Greenspeed® Intelligence	X	X	X	X
Energy Tracking Capability	X	X	X	X
Sound Blanket	X	X	X	X
Outdoor Air Temperature Sensor	X	X	X	X
Long Line Capability	X	X	X	X

X = Standard

AHRI RATINGS

For AHRI ratings certificates, please refer to the AHRI directory www.ahridirectory.org
Additional ratings and system combinations can be accessed via the Ratings Database here: ICP Commercial Ratings

NOTE: Ratings are subject to change at any time.

MIN/MAX Airflow Tables

The indoor airflow delivered by this system varies significantly based on outdoor temperature, indoor unit combination, and system demand. The airflows on these tables are for duct design considerations.

Duct systems capable of these ranges will ensure the system will deliver full capacity at all outdoor temperatures.
Minimum and maximum airflows can be adjusted from these numbers in the Ion™ BlackIon™ Black System Control Air Conditioner Setup screen.

Size	Cooling - Comfort Mode		Cooling - Efficiency Mode	
	Max Airflow	Min Airflow	Max Airflow	Min Airflow
24	770	300	770	485
36	1050	400	1150	500
48	1200	600	1350	700
60	1400	600	1625	785

Physical Data

UNIT SIZE	24	36	48	60
COMPRESSOR TYPE	Variable Speed Rotary			
REFRIGERANT	R-454B			
Charge lb* (kg)	5.2 (2.4)	6.0 (2.7)	6.4 (2.9)	7.7 (3.5)
COND FAN	Forward Swept Propeller Type, Direct Drive			
Air Discharge	Vertical			
Maximum Air Qty (CFM)	2500	3500	4190	5250
Motor HP	1/5	1/3	1/3	1/3
Motor RPM	200-1000	200-850	200-825	200-825
COND COIL				
Face Area (sq ft.)	12.5	19.4	23.7	27.6
Fins per In.	20	25	20	20
Rows	1	1	1	1
Circuits	4	3	5	6
VALVE CONNECT. (In. ID)				
Vapor	3/4	3/4	7/8	7/8
Liquid	3/8			
REFRIGERANT TUBES† (In. OD)				
Rated Vapor†	3/4	7/8	7/8	1 - 1/8
Max Rated Liquid Line‡	3/8			

*.Units are pre-charged for operation with AHRI-rated smallest indoor unit when connected by 15 ft (4.57 m) of lineset length.
†.Units are rated with 25 ft (7.6 m) of lineset length. See Vapor Line Sizing and Cooling Capacity Loss table when using other sizes and lengths of lineset.
‡.See Liquid Line Sizing For Cooling Only Systems with R-454B Refrigerant tables.
Note: See unit Installation Instruction for proper installation.

Electrical Data

UNIT SIZE	V-PH	OPER VOLTS*		COMPR		FAN	MCA	MAX FUSE† or CKT BRK AMPS	SCCR
		MAX	MIN	MRC	RLA	FLA			
24	208-230-1	253	197	25	11.7	0.70	19.4	25	5kA rms
36				25	12.7	0.88	22.9	25	5kA rms
48				25	17.9	0.88	30.6	40	5kA rms
60				35	23.7	0.88	36.9	50	5kA rms

*. Permissible limits of the voltage range at which the unit will operate satisfactorily
†. Time-Delay fuse.
FLA - Full Load Amps
MCA - Minimum Circuit Amps
MRC - Maximum Rated Current
RLA - Rated Load Amps
SCCR - Short-Circuit Current Rating
NOTE: Control circuit is 24-V on all units and requires external power source. Copper wire must be used from service disconnect to unit.
All motors/compressors contain internal overload protection.

Refrigerant Piping Length Limitations

Maximum Line Lengths:

The maximum allowable equivalent length for air conditioners varies depending on the vertical separation. See the tables below for allowable lengths depending on whether the outdoor unit is on the same level, above or below the outdoor unit.

Maximum Line Lengths for Air Conditioner Applications

	MAXIMUM ACTUAL LENGTH ft (m)	MAXIMUM EQUIVALENT LENGTH* ft (m)	MAXIMUM VERTICAL SEPARATION ft (m)
Units on equal level	200 (61)	200 (61)	N/A
Outdoor unit ABOVE indoor unit	200 (61)	200 (61)	100 (30.5)
Outdoor unit BELOW indoor unit	200 (61)	200 (61)	80 (24.2)

*. Equivalent length accounts for losses due to elbows or fitting. See the Long Line Guideline for details.

Long Line Applications

An application is considered Long Line when the refrigerant level in the system requires the use of accessories to maintain acceptable refrigerant management for systems reliability. Defining a system as long line depends on the liquid line diameter, actual length of the tubing, and vertical separation between the indoor and outdoor units.

For air conditioning systems, the chart below shows when an application is considered Long Line. Beyond these lengths, long line accessories are required:

AC with R-454B Refrigerant Long Line Description ft (m)
Beyond these lengths, long line accessories are required

Liquid Line Size	Units On Same Level ft (m)	Outdoor Above Indoor ft (m)	Outdoor Below Indoor ft (m)
3/8	80 (24.4)	80 (24.4)	20 (6.1) vertical or 80 (24.4) total

NOTE: See Long Line Guideline for details

COOLING CAPACITY LOSS TABLE

Nominal Size (Btuh)	Line OD (in)	Cooling Capacity Loss (%) Equivalent Length (ft)								
		25	**50**	**75**	**80**	**100**	**125**	**150**	**175**	**200**
24000	5/8	0.7	2.0	3.4	2.3	3.3	4.6	5.8	6.9	8.0
	3/4	0.0	0.7	1.4	0.2	0.8	1.4	2.1	2.7	3.3
36000	5/8	1.6	3.8	5.9	6.3	7.8	9.7	11.4	13.0	14.6
	3/4	0.4	1.4	2.4	2.6	3.4	4.4	5.3	6.2	7.1
	7/8	0.0	0.7	1.4	1.5	2.0	2.7	3.3	3.9	4.5
48000	3/4	1.2	2.7	4.0	4.0	5.1	6.4	7.7	9.0	10.2
	7/8	0.5	1.3	2.0	1.9	2.5	3.2	4.0	4.7	5.5
	1 1/8	0.0	—	—	—	—	—	—	—	—
60000	3/4	1.8	3.9	5.8	6.2	7.7	9.5	11.2	12.9	14.5
	7/8	0.8	1.8	2.9	3.1	3.9	5.0	6.1	7.1	8.2
	1 1/8	0.0	—	—	—	—	—	—	—	—

Rated size Line OD and Rated Total Equivalent Length are in **BOLD**.

= Equivalent Length greater than 80 ft requires long line accessory liquid line solenoid

—= Applications in this range are disallowed

Accessories

KIT NUMBER	KIT NAME	24	36	48	60
NASA00201SF	SUPPORT FEET	X	X	X	X
NASA00601SJ	SOUND BLANKET (ACCUMULATOR)	X			
NASA00701SJ	SOUND BLANKET (ACCUMULATOR)		X		
NASA00401SJ	SOUND BLANKET (ACCUMULATOR)			X	X
NASA401LS	SOLENOID VALVE	X	X	X	X

X = Accessory

Accessory Usage Guideline

ACCESSORY	REQUIRED FOR LOW-AMBIENT COOLING APPLICATIONS (Below 55°F/12.8°C)	REQUIRED FOR LONG LINE APPLICATIONS (Over 80 ft/24.4 m)	REQUIRED FOR SEA COAST APPLICATIONS (Within 2 miles/3.22 km)
Evaporator Freeze Protection	Standard with Ion™ Black System Control	No	No
Liquid-Line Solenoid Valve	No	Yes	No
Low-Ambient Control	Standard with Ion™ Black System Control	No	No
Support Feet	Recommended	Recommended	Recommended
Winter Start Control	Standard with Ion™ Black System Control	No	No

Accessory Description and Usage

1. Liquid-Line Solenoid Valve (LLS)

An electrically operated shutoff valve which stops and starts refrigerant liquid flow in response to compressor operation. It is to be installed at the outdoor unit to control refrigerant off cycle migration in the OFF mode.

Usage Guideline:

A LLS is required in all long line applications to control refrigerant off cycle migration in the OFF mode. See Long Line Guideline.

Suggested for all commercial applications.

2. Sound Blanket (Accumulator)

Wraparound sound reducing cover for the accumulator. Reduces possible transient tones that may resonate in the accumulator due to variability in system operation.

Usage Guideline:

Although all units are designed and tested to eliminate unpleasant tones, in the unlikely event a transient tone is experienced, this sound blanket can reduce the tone by up to 10 dB.

3. Support Feet

Four or five stick-on plastic feet that raise the unit 4 in. (101.6 mm) above the mounting pad. This allows sand, dirt, and other debris to be flushed from the unit base, minimizing corrosion.

Usage Guideline:

Suggested in the following applications:

Coastal installations.

Windy areas or where debris is normally circulating.

Rooftop installations.

For improved sound ratings.

A–Weighted Sound Power (dBA)

Unit Size	Typical Octave Band Spectrum (dB, without tone adjustment)	Min Cooling	Nominal* Cooling
24	Speed	1200	4380
	125	62	71
	250	57	66
	500	52	65
	1000	47	62
	2000	47	58
	4000	39	52
	8000	42	57
	Sound Rating (dBA)	55	68
36	Speed	900	5040
	125	62	69
	250	59	65
	500	49	64
	1000	45	62
	2000	41	56
	4000	48	55
	8000	52	62
	Sound Rating (dBA)	55	72
48	Speed	900	4140
	125	63	67
	250	59	70
	500	53	71
	1000	51	68
	2000	40	62
	4000	39	60
	8000	40	56
	Sound Rating (dBA)	64	72
60	Speed	900	3780
	125	59	66
	250	58	75
	500	55	69
	1000	54	65
	2000	45	61
	4000	46	61
	8000	47	62
	Sound Rating (dBA)	58	72

*. Nominal condition data taken from maximum speed operation at 95°F in cooling and 47°F in heating
NOTE: Tested in compliance with AHRI 270-2015 but not listed with AHRI.

Charging Subcooling

UNIT SIZE	NOMINAL SUBCOOLING*	REQUIRED SUBCOOLING °F (°C) - See System Control
24	6	Subcooling recommendation displayed on System Control in Charging Mode must be followed
36	6	
48	9	
60	11.5	

*. Nominal subcooling targets for use as reference or in specific applications with 25 ft. (7.6 m) lineset, 95°F outdoor ambient, and 80°F/67°F indoor DB/WB.

DIMENSIONS

UNIT	SERIES	ELECTRICAL CHARACTERISTICS				A		B		C		D		E		F		G		H		I		J		K		OPERATING WEIGHT		SHIPPING WEIGHT		SHIPPING LENGTH / WIDTH (Sq.)		SHIPPING HEIGHT	
						INCH	MM	INCH	MM	INCH	MM	INCH	MM	INCH	MM	INCH	MM	INCH	MM	INCH	MM	INCH	MM	INCH	MM	INCH	MM	Lbs	Kgs	Lbs	Kgs	INCH	MM	INCH	MM
H5A1V24**AWA	A	Y	N	N	N	23 1/8	587.3	35 1/2	902.0	3/4	19.1	4 7/16	113.0	18 1/16	459.0	7 13/16	197.9	5/16	7.9	3	76.2	10 5/8	269.9	10 7/8	276.2	17 7/8	454.0	135	61.2	153	69.4	26 1/8	664.0	40 13/16	1036.6
H5A1V36**AWA	A	Y	N	N	N	31 3/16	792.5	35 1/2	902.0	3/4	19.1	6 9/16	166.1	24 11/16	626.3	9 1/8	231.3	5/16	7.9	3	76.2	15 1/8	384.2	15 1/2	393.7	18 1/8	460.4	189	85.7	216	98.0	34 1/4	870.0	39 5/8	1006.9
H5A1V48**AWA	A	Y	N	N	N	31 3/16	792.5	42 5/16	1074.7	7/8	22.2	6 9/16	166.1	24 11/16	626.3	9 1/8	231.3	5/16	7.9	3	76.2	14 1/2	368.3	15 3/8	390.5	20	508.0	222	100.7	251	113.9	34 1/4	870.0	46 9/16	1182.7
H5A1V60**AWA	A	Y	N	N	N	35	889.0	43 13/16	1112.6	7/8	22.2	6 9/16	166.1	28 7/16	722.8	9 1/8	231.3	5/16	7.9	3	76.2	15	381.0	16 3/8	415.9	20 1/4	514.4	257	116.6	287	130.2	38	965.0	47 5/8	1209.4

208-230-1-60	208/230-3-60	460-3-60	575-3-60	Y=YES N=NO

NOTES:

1. CENTER OF GRAVITY .

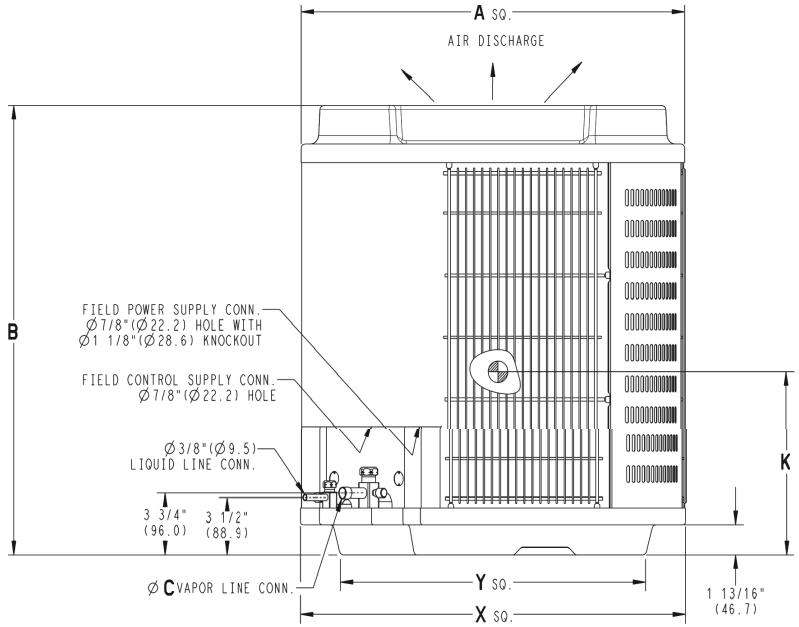

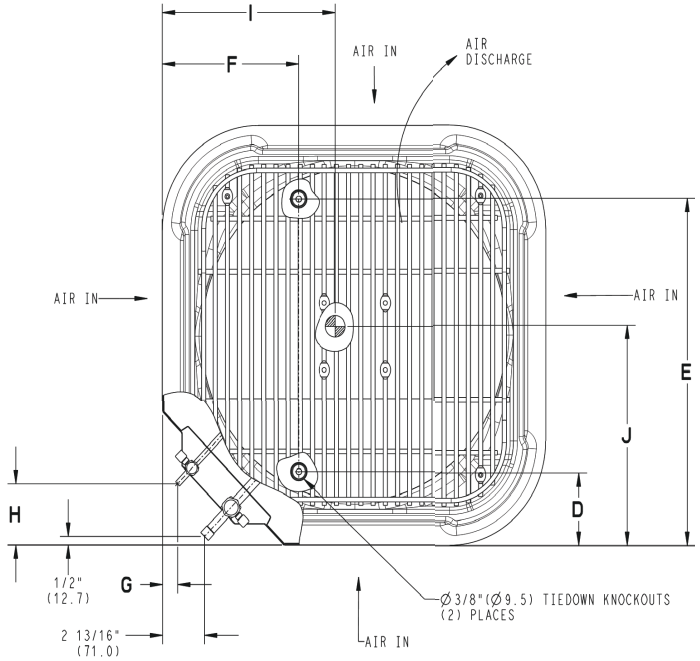

UNIT SIZE	"X" MINIMUM GROUND MOUNTING PAD APPLICATION DIMENSIONS		"Y" MINIMUM ROOF-TOP MOUNTING PAD APPLICATION DIMENSIONS	
24	23 1/8	587.3	17 7/8	454.6
-	25 3/4	654.0	20 7/16	518.5
36,48	31 3/16	792.5	22 15/16	583.2
60	35	889.0	26 3/4	679.7

NOTE: ALL DIMENSIONS IN INCH (MM)

U.S. ECCN: Not Subject to Regulation (N.S.R.)

SD5957-4 REV.-

Manufacturer reserves the right to change, at any time, specifications and designs without notice and without obligations.

Clearances

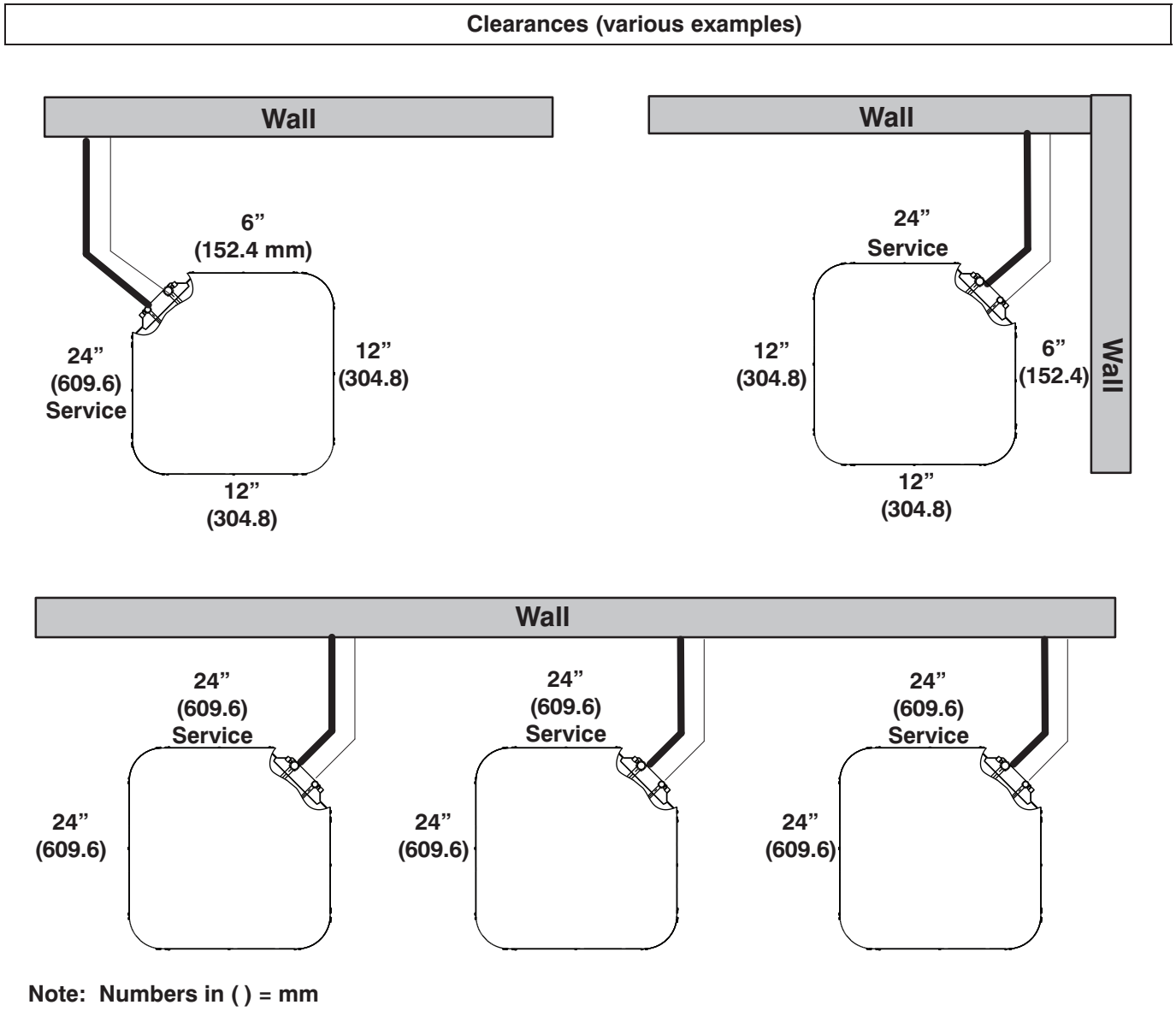

IMPORTANT: When installing multiple units in an alcove, roof well, or partially enclosed area, ensure there is adequate ventilation to prevent re-circulation of discharge air.

A07833

Manufacturer reserves the right to change, at any time, specifications and designs without notice and without obligations.

Detailed Cooling Capacities# - Comfort + Dehumidify Mode

EVAPORATOR AIR °F (°C)		CONDENSER ENTERING AIR TEMPERATURES °F (°C)																											
		65.0 (18.3)				75.0 (23.9)				85.0 (29.4)				95.0 (35.0)				105.0 (40.6)				115.0 (46.1)				125.0 (51.7)			
EDB	EWB	ID SCFM	Capacity MBtuh Total	Capacity MBtuh Sens‡	Total Sys. KW**	ID SCFM	Capacity MBtuh Total	Capacity MBtuh Sens‡	Total Sys. KW**	ID SCFM	Capacity MBtuh Total	Capacity MBtuh Sens‡	Total Sys. KW**	ID SCFM	Capacity MBtuh Total	Capacity MBtuh Sens‡	Total Sys. KW**	ID SCFM	Capacity MBtuh Total	Capacity MBtuh Sens‡	Total Sys. KW**	ID SCFM	Capacity MBtuh Total	Capacity MBtuh Sens‡	Total Sys. KW**	ID SCFM	Capacity MBtuh Total	Capacity MBtuh Sens‡	Total Sys. KW**
H5A1V24 Maximum Demand																													
75 (23.9)	72.0 (22.2)	700	28.2	10.6	1.25	700	27.4	10.5	1.46	700	27.2	10.6	1.77	700	26.2	10.2	2.02	700	25	9.8	2.28	770	23.6	9.2	2.58	770	16.9	6.7	2.07
	67.0 (19.4)		25.8	14	1.28		25	14	1.48		24.8	14.1	1.78		23.8	13.8	2.01		22.8	13.3	2.27		21.6	13.1	2.57		15.4	10.3	2.06
	63.0 (17.2)††		24	16.7	1.3		23.4	16.7	1.51		23	16.9	1.79		22.2	16.6	2.02		21.2	16.1	2.26		20.2	16.1	2.56		14.4	12.9	2.05
	57.0 (13.9)		21.8	20.4	1.32		21.2	20.4	1.52		21	20.4	1.79		20.4	19.9	2.02		19.6	19.1	2.24		19.1	18.4	2.53		14.3	13.1	2.04
80 (26.7)	72.0 (22.2)	700	28.2	13.9	1.25	700	27.4	13.9	1.46	700	27	14.1	1.76	700	26	13.7	2.01	700	24.8	13.3	2.27	770	23.6	13	2.6	770	16.8	10.2	2.07
	67.0 (19.4)		25.8	17.3	1.28		25	17.3	1.49		24.8	17.6	1.78		23.6	17.3	2.02		22.8	16.8	2.28		21.6	16.8	2.58		15.5	13.6	2.07
	63.0 (17.2)††		24	19.9	1.3		23.4	19.9	1.51		23	20.2	1.78		22.2	20	2.01		21.2	19.5	2.25		20.4	19.5	2.56		15.3	14	2.06
	57.0 (13.9)		23	21.6	1.32		22.4	21.6	1.51		22.2	21.6	1.78		21.6	21	2.02		20.8	20.2	2.25		20.4	19.5	2.57		15.3	14	2.06
H5A1V24 Intermediate Demand																													
75 (23.9)	72.0 (22.2)	535	16	6.4	0.5	535	15.4	6.3	0.62	535	15.2	6.3	0.76	535	15.5	6.3	0.97	550	14.7	6.1	1.13	550	13.7	5.7	1.27	600	10.7	4.8	1.24
	67.0 (19.4)		14.5	9	0.53		13.9	8.9	0.64		13.7	8.9	0.78		14	9	0.98		13.2	8.8	1.13		12.4	8.4	1.28		9.7	7.6	1.25
	63.0 (17.2)††		13.5	11	0.55		12.9	11	0.65		12.7	11	0.79		13	11.1	0.99		12.3	11	1.13		11.5	10.5	1.27		9.3	8.8	1.24
	57.0 (13.9)		12.9	12.3	0.56		12.4	12.1	0.66		12.3	12	0.8		12.5	12.2	0.99		12	11.6	1.13		11.3	10.9	1.27		9.3	8.8	1.24
80 (26.7)	72.0 (22.2)	535	16	9	0.5	535	15.3	8.9	0.61	535	15.1	9	0.76	535	15.4	9.1	0.97	550	14.6	8.8	1.12	550	13.6	8.4	1.27	600	10.6	7.7	1.24
	67.0 (19.4)		14.5	11.5	0.53		13.9	11.5	0.64		13.7	11.6	0.78		14	11.7	0.98		13.2	11.5	1.13		12.4	11.1	1.27		10	9.5	1.24
	63.0 (17.2)††		13.7	13.1	0.54		13.2	12.9	0.65		13.1	12.8	0.79		13.3	13	0.99		12.8	12.4	1.13		12.1	11.6	1.27		10	9.5	1.24
	57.0 (13.9)		13.7	13.1	0.54		13.2	12.9	0.65		13.1	12.8	0.79		13.3	13	0.99		12.8	12.4	1.13		12.1	11.6	1.27		10	9.5	1.25
H5A1V24 Minimum Demand																													
75 (23.9)	72.0 (22.2)	300	8.9	3.5	0.21	300	8.4	3.4	0.29	300	7.9	3.3	0.37	300	9.2	3.8	0.55	300	8.7	3.6	0.66	300	8	3.4	0.75	300	7.3	3.1	0.85
	67.0 (19.4)		8	4.9	0.24		7.5	4.9	0.31		7.1	4.8	0.39		8.3	5.3	0.57		7.8	5.1	0.67		7.2	4.9	0.76		8.8	5.3	0.8
	63.0 (17.2)††		7.3	6	0.25		6.9	6	0.33		6.5	5.9	0.4		7.6	6.5	0.58		7.1	6.3	0.67		6.6	6	0.76		8	6.5	0.79
	57.0 (13.9)		7	6.6	0.26		6.7	6.4	0.33		6.4	6.2	0.41		7.3	7.1	0.58		6.9	6.7	0.67		6.5	6.2	0.76		7.6	7.2	0.8
80 (26.7)	72.0 (22.2)	300	8.8	4.9	0.21	300	8.3	4.9	0.29	300	7.9	4.8	0.37	300	9.2	5.4	0.56	300	8.6	5.1	0.65	300	7.9	4.9	0.75	300	7.2	4.5	0.85
	67.0 (19.4)		8	6.3	0.24		7.5	6.3	0.31		7.1	6.2	0.39		8.3	6.9	0.57		7.8	6.6	0.67		7.2	6.3	0.76		6.5	5.9	0.85
	63.0 (17.2)††		7.5	7.1	0.25		7.2	6.9	0.32		6.9	6.6	0.4		7.8	7.7	0.58		7.4	7.2	0.67		7	6.7	0.76		6.4	6.1	0.84
	57.0 (13.9)		7.5	7.1	0.25		7.2	6.9	0.32		6.9	6.6	0.4		7.8	7.7	0.58		7.4	7.2	0.67		6.9	6.7	0.75		6.4	6.1	0.85

Manufacturer reserves the right to change, at any time, specifications and designs without notice and without obligations.

Detailed Cooling Capacities# - Comfort + Dehumidify Mode (Continued)

EVAPORATOR AIR °F (°C)		CONDENSER ENTERING AIR TEMPERATURES °F (°C)																														
		65.0 (18.3)				75.0 (23.9)				85.0 (29.4)				95.0 (35.0)				105.0 (40.6)				115.0 (46.1)				125.0 (51.7)			
EDB	EWB	ID SCFM	Capacity MBtuh Total	Capacity MBtuh Sens‡	Total Sys. KW**	ID SCFM	Capacity MBtuh Total	Capacity MBtuh Sens‡	Total Sys. KW**	ID SCFM	Capacity MBtuh Total	Capacity MBtuh Sens‡	Total Sys. KW**	ID SCFM	Capacity MBtuh Total	Capacity MBtuh Sens‡	Total Sys. KW**	ID SCFM	Capacity MBtuh Total	Capacity MBtuh Sens‡	Total Sys. KW**	ID SCFM	Capacity MBtuh Total	Capacity MBtuh Sens‡	Total Sys. KW**	ID SCFM	Capacity MBtuh Total	Capacity MBtuh Sens‡	Total Sys. KW**
H5A1V36 Maximum Demand																																
75 (23.9)	72.0 (22.2)	800	40	16.1	1.63	800	39	15.8	1.96	850	38.5	15.4	2.34	850	36.8	14.9	2.67	900	35.6	14.4	3.06	1050	34.4	14.1	3.48	1050	32	13.4	3.63
	67.0 (19.4)		36.2	20.2	1.64		35.6	19.9	1.98		34.8	19.8	2.34		33.4	19.2	2.66		32.2	19	3.03		31.2	19.3	3.46		29	18.7	3.6
	63.0 (17.2)††		33.6	23.4	1.65		32.8	23.2	1.97		32.2	23.2	2.33		31	22.6	2.66		29.8	22.6	3.02		28.8	23.4	3.43		26.8	22.8	3.55
	57.0 (13.9)		30	28	1.66		29.4	27.6	1.98		28.8	28	2.32		27.8	27.2	2.63		26.8	26.8	2.98		26.8	26.8	3.4		25.2	25.2	3.54
80 (26.7)	72.0 (22.2)	800	40	20.2	1.63	800	39	19.9	1.96	850	38.5	19.8	2.34	850	36.8	19.2	2.67	900	35.6	19	3.06	1050	34.4	19.3	3.49	1050	32	18.7	3.64
	67.0 (19.4)		36.2	24.2	1.64		35.4	24	1.97		34.8	24	2.34		33.4	23.6	2.66		32.2	23.6	3.04		31.2	24.4	3.47		29	24	3.61
	63.0 (17.2)††		33.4	27.4	1.64		32.8	27.2	1.97		32.2	27.4	2.33		31	26.8	2.66		29.8	27	3.02		29	28.2	3.43		27	27	3.54
	57.0 (13.9)		30.6	30.6	1.66		30.2	30.2	1.98		30	30	2.32		29	29	2.63		28.6	28.6	3.02		28.6	28.6	3.44		26.8	26.8	3.55
H5A1V36 Intermediate Demand																																
75 (23.9)	72.0 (22.2)	700	22	9.2	0.55	700	21.4	9	0.7	700	20.6	8.7	0.87	700	21.2	9	1.13	750	20.2	8.7	1.33	750	19.1	8.3	1.51	750	17.6	7.9	1.64
	67.0 (19.4)		20	12.7	0.58		19.4	12.5	0.73		18.6	12.2	0.89		19.1	12.6	1.15		18.2	12.5	1.34		17.2	12.2	1.51		15.8	11.7	1.63
	63.0 (17.2)††		18.4	15.5	0.6		17.8	15.2	0.74		17.1	14.9	0.91		17.6	15.3	1.16		16.8	15.4	1.35		15.8	15	1.5		14.6	14.4	1.63
	57.0 (13.9)		17.3	17.3	0.62		16.9	16.9	0.76		16.3	16.3	0.92		16.7	16.7	1.17		16.2	16.2	1.35		15.4	15.4	1.5		14.4	14.4	1.63
80 (26.7)	72.0 (22.2)	700	22	12.8	0.55	700	21.4	12.6	0.7	700	20.6	12.3	0.87	700	21.2	12.6	1.14	750	20.2	12.5	1.34	750	19	12.2	1.5	750	17.5	11.8	1.64
	67.0 (19.4)		19.9	16.2	0.58		19.3	16	0.73		18.5	15.7	0.89		19.1	16.1	1.15		18.2	16.2	1.35		17.2	15.8	1.51		15.9	15.3	1.64
	63.0 (17.2)††		18.6	18.5	0.6		18.1	18.1	0.74		17.5	17.5	0.9		17.9	17.9	1.16		17.4	17.4	1.35		16.6	16.6	1.51		15.5	15.5	1.63
	57.0 (13.9)		18.4	18.4	0.6		18	18	0.74		17.4	17.4	0.9		17.8	17.8	1.16		17.4	17.4	1.35		16.6	16.6	1.51		15.5	15.5	1.63
H5A1V36 Minimum Demand																																
75 (23.9)	72.0 (22.2)	400	11.4	4.9	0.19	400	10.9	4.7	0.28	400	10.3	4.5	0.37	400	11.9	5	0.58	400	11	4.7	0.7	400	10.4	4.7	0.8	400	9.8	4.4	0.91
	67.0 (19.4)		10.2	6.9	0.22		9.8	6.8	0.3		9.2	6.6	0.39		10.7	7.1	0.6		10	6.9	0.71		9.3	6.7	0.81		8.7	6.5	0.9
	63.0 (17.2)††		9.4	8.5	0.23		9	8.3	0.32		8.5	8.1	0.4		9.8	8.7	0.61		9.2	8.4	0.72		8.6	8.2	0.82		8	7.9	0.91
	57.0 (13.9)		9	9	0.24		8.7	8.6	0.32		8.3	8.2	0.4		9.4	9.2	0.61		8.9	8.8	0.72		8.3	8.3	0.81		7.9	7.9	0.91
80 (26.7)	72.0 (22.2)	400	11.4	7	0.19	400	10.9	6.8	0.28	400	10.2	6.6	0.37	400	11.9	7.2	0.58	400	11.1	6.9	0.7	400	10	6.6	0.79	400	9.7	6.5	0.9
	67.0 (19.4)		10.2	8.9	0.22		9.8	8.8	0.3		9.2	8.6	0.39		10.6	9.1	0.59		10	8.9	0.71		9.6	7.8	0.81		8.4	7.2	0.9
	63.0 (17.2)††		9.7	9.7	0.23		9.4	9.3	0.31		9	8.9	0.39		10.1	10	0.6		9.6	9.5	0.71		9.1	9	0.81		8.6	8.6	0.91
	57.0 (13.9)		9.7	9.6	0.23		9.4	9.3	0.31		9	8.9	0.39		10	9.9	0.6		9.6	9.5	0.72		9.1	9	0.81		8.6	8.6	0.91

Manufacturer reserves the right to change, at any time, specifications and designs without notice and without obligations.

Detailed Cooling Capacities# - Comfort + Dehumidify Mode (Continued)

EVAPORATOR AIR °F (°C)		CONDENSER ENTERING AIR TEMPERATURES °F (°C)																											
		65.0 (18.3)				75.0 (23.9)				85.0 (29.4)				95.0 (35.0)				105.0 (40.6)				115.0 (46.1)				125.0 (51.7)			
EDB	EWB	ID SCFM	Capacity MBtuh Total	Capacity MBtuh Sens‡	Total Sys. KW**	ID SCFM	Capacity MBtuh Total	Capacity MBtuh Sens‡	Total Sys. KW**	ID SCFM	Capacity MBtuh Total	Capacity MBtuh Sens‡	Total Sys. KW**	ID SCFM	Capacity MBtuh Total	Capacity MBtuh Sens‡	Total Sys. KW**	ID SCFM	Capacity MBtuh Total	Capacity MBtuh Sens‡	Total Sys. KW**	ID SCFM	Capacity MBtuh Total	Capacity MBtuh Sens‡	Total Sys. KW**	ID SCFM	Capacity MBtuh Total	Capacity MBtuh Sens‡	Total Sys. KW**
H5A1V48 Maximum Demand																													
75 (23.9)	72.0 (22.2)	1100	48	19.7	1.92	1100	50.5	19.7	2.44	1100	47.5	18.9	2.87	1050	45.5	19.9	3.82	1050	41	19.1	4.23	1200	39.5	18.3	4.76	1200	33.8	13.8	3.8
	67.0 (19.4)		44	25.4	1.95		46	25.2	2.46		43.5	24.4	2.9		41.5	25.2	3.8		37.4	24.4	4.19		36	24.4	4.7		30.8	19.6	3.77
	63.0 (17.2)††		41	30	1.96		42.5	29.6	2.46		40	28.8	2.87		38.5	29.4	3.77		34.6	28.6	4.15		33.4	29.2	4.65		28.6	24	3.74
	57.0 (13.9)		36.6	36.2	1.96		38	35.8	2.46		36	34.8	2.88		34.2	34.2	3.7		31	31	4.09		30.2	30.2	4.56		27.2	27	3.72
80 (26.7)	72.0 (22.2)	1100	48	25.4	1.92	1100	50.5	25.2	2.45	1100	47.5	24.4	2.89	1050	45.5	25.2	3.82	1050	41	24.4	4.24	1200	39.5	24.4	4.77	1200	33.6	19.5	3.79
	67.0 (19.4)		44	31	1.95		46	30.6	2.46		43	29.8	2.87		41.5	30.6	3.81		37.4	29.8	4.2		35.8	30.4	4.69		30.8	25.2	3.77
	63.0 (17.2)††		40.5	35.4	1.94		42.5	35	2.46		40	34	2.88		38.5	34.8	3.78		34.6	33.8	4.15		33.4	33.4	4.65		29.2	28.4	3.75
	57.0 (13.9)		38	38	1.95		39.5	39	2.46		37.6	37.4	2.88		35.4	35.4	3.73		32.4	32.4	4.12		32	32	4.61		29	28.6	3.75
H5A1V48 Intermediate Demand																													
75 (23.9)	72.0 (22.2)	950	30.2	12.7	0.86	950	31	12.3	1.14	900	29	11.7	1.35	900	30	12.6	1.88	900	27	12.1	2.14	900	25.4	11.4	2.4	1000	23	9.8	2.39
	67.0 (19.4)		27.6	17.7	0.91		28.2	17.1	1.18		26.4	16.2	1.38		27.2	17.1	1.9		24.6	16.6	2.15		23	15.9	2.39		20.8	14.7	2.38
	63.0 (17.2)††		25.6	21.6	0.94		26.2	20.8	1.2		24.4	19.8	1.4		25.2	20.6	1.91		22.6	20.2	2.14		21.2	19.4	2.38		19.3	18.4	2.37
	57.0 (13.9)		24	24	0.95		24.6	23.6	1.21		23	22.4	1.41		23.2	23.2	1.9		21.2	21.2	2.15		20	20	2.36		19.1	18.8	2.38
80 (26.7)	72.0 (22.2)	950	30	17.6	0.86	950	30.8	17	1.14	900	28.8	16.2	1.34	900	29.8	17.1	1.88	900	26.8	16.6	2.13	900	25.2	15.9	2.39	1000	22.8	14.7	2.39
	67.0 (19.4)		27.4	22.4	0.9		28.2	21.8	1.18		26.2	20.6	1.37		27	21.6	1.89		24.4	21	2.14		23	20.4	2.4		20.8	19.4	2.38
	63.0 (17.2)††		25.8	25.8	0.93		26.4	25	1.19		24.6	23.8	1.4		25.2	25	1.9		22.8	22.8	2.15		21.6	21.6	2.39		20.4	20.2	2.37
	57.0 (13.9)		25.6	25.6	0.94		26.2	25.2	1.19		24.4	23.8	1.39		24.8	24.8	1.91		22.6	22.6	2.15		21.4	21.4	2.38		20.4	20.2	2.38
H5A1V48 Minimum Demand																													
75 (23.9)	72.0 (22.2)	600	19.3	8.3	0.39	600	19	7.8	0.56	600	17.6	7.4	0.72	600	19.2	8.3	1.1	600	17.3	8	1.29	600	16.1	7.5	1.47	600	16.3	7	1.65
	67.0 (19.4)		17.4	11.5	0.43		17.2	10.9	0.6		15.9	10.5	0.75		17.4	11.4	1.13		15.6	11	1.31		14.5	10.6	1.47		14.7	10	1.65
	63.0 (17.2)††		16.5	15.7	0.48		15.9	13.3	0.62		14.7	12.9	0.78		16	13.8	1.14		14.3	13.4	1.31		13.4	12.9	1.49		13.5	12.3	1.65
	57.0 (13.9)		16.1	16.1	0.49		15.1	14.7	0.63		14.1	13.9	0.78		15	15	1.15		13.6	13.6	1.33		12.8	12.8	1.48		13.1	13.1	1.65
80 (26.7)	72.0 (22.2)	600	19.2	11.5	0.39	600	18.9	10.9	0.56	600	17.5	10.5	0.72	600	19.1	11.4	1.1	600	17.2	11	1.29	600	16	10.6	1.47	600	16.1	10	1.64
	67.0 (19.4)		17.4	14.6	0.43		17.1	13.9	0.59		15.8	13.5	0.75		17.3	14.4	1.12		15.5	14.1	1.3		14.5	13.6	1.48		15	14.8	1.69
	63.0 (17.2)††		16.3	16.3	0.46		16.2	15.7	0.61		15.1	14.9	0.76		16.1	16.1	1.14		14.6	14.6	1.32		13.7	13.7	1.48		14	14	1.64
	57.0 (13.9)		16.2	16.2	0.46		16.2	15.7	0.62		15.1	14.9	0.77		16	16	1.14		14.5	14.5	1.32		13.7	13.7	1.48		14	14	1.64

Manufacturer reserves the right to change, at any time, specifications and designs without notice and without obligations.

Detailed Cooling Capacities# - Comfort + Dehumidify Mode (Continued)

EVAPORATOR AIR °F (°C)		CONDENSER ENTERING AIR TEMPERATURES °F (°C)																														
		65.0 (18.3)				75.0 (23.9)				85.0 (29.4)				95.0 (35.0)				105.0 (40.6)				115.0 (46.1)				125.0 (51.7)			
EDB	EWB	ID SCFM	Capacity MBtuh Total	Capacity MBtuh Sens‡	Total Sys. KW**	ID SCFM	Capacity MBtuh Total	Capacity MBtuh Sens‡	Total Sys. KW**	ID SCFM	Capacity MBtuh Total	Capacity MBtuh Sens‡	Total Sys. KW**	ID SCFM	Capacity MBtuh Total	Capacity MBtuh Sens‡	Total Sys. KW**	ID SCFM	Capacity MBtuh Total	Capacity MBtuh Sens‡	Total Sys. KW**	ID SCFM	Capacity MBtuh Total	Capacity MBtuh Sens‡	Total Sys. KW**	ID SCFM	Capacity MBtuh Total	Capacity MBtuh Sens‡	Total Sys. KW**
H5A1V60 Maximum Demand																																
75 (23.9)	72.0 (22.2)	1400	63.5	25.8	2.7	1400	67	27	3.53	1400	66	26.6	4.37	1400	61.5	25.4	4.94	1400	57	24.2	5.51	1300	53.5	22.8	6.05	1300	46	19.9	5.42
	67.0 (19.4)		58	33.2	2.72		61.5	34.2	3.57		60	33.6	4.35		56	32.4	4.91		52	31.2	5.46		49	29.4	5.99		42	26.8	5.37
	63.0 (17.2)††		54	39	2.73		56.5	39.5	3.53		55.5	39	4.32		52	37.8	4.89		48.5	36.6	5.44		45	34.6	5.86		39	32	5.33
	57.0 (13.9)		48.5	47	2.73		50.5	48	3.52		49.5	47	4.27		46.5	45.5	4.82		43	43	5.3		40.5	40.5	5.79		35.8	35.8	5.25
80 (26.7)	72.0 (22.2)	1400	63.5	33	2.7	1400	67	34	3.54	1400	66	33.6	4.38	1400	61.5	32.2	4.96	1400	57	31	5.53	1300	53.5	29.4	6.07	1300	46	26.6	5.44
	67.0 (19.4)		58	40	2.72		61	41	3.55		60	40.5	4.35		56	39	4.92		52	38	5.47		48.5	36	5.94		42	33.4	5.38
	63.0 (17.2)††		54	46	2.74		56.5	46.5	3.54		55.5	46	4.32		51.5	44.5	4.85		48	43.5	5.39		45	41	5.87		39	38.5	5.33
	57.0 (13.9)		50.5	50.5	2.74		52.5	52.5	3.55		51	51	4.27		48	48	4.81		45.5	45.5	5.39		42.5	42.5	5.84		38	38	5.29
H5A1V60 Intermediate Demand																																
75 (23.9)	72.0 (22.2)	1000	40	15.8	1.14	1000	41	16.1	1.52	1000	39.5	15.8	1.88	1000	40	16.5	2.51	1000	37.2	15.7	2.88	1000	35	15	3.26	1000	30.8	13.2	3.23
	67.0 (19.4)		36.2	21	1.19		37	21.2	1.56		35.8	21	1.92		36.4	21.6	2.54		33.8	20.8	2.89		31.8	20.2	3.24		28	18.4	3.22
	63.0 (17.2)††		33.6	25	1.23		34.2	25.2	1.59		33	24.8	1.93		33.6	25.6	2.55		31.2	24.8	2.88		29.4	24.2	3.23		25.8	22.4	3.19
	57.0 (13.9)		30.6	30	1.27		31	30.4	1.61		30	29.8	1.96		30.2	30.2	2.54		28.4	28.4	2.87		27	27	3.21		24.4	24.4	3.17
80 (26.7)	72.0 (22.2)	1000	39.5	20.8	1.13	1000	40.5	21.2	1.51	1000	39.5	20.8	1.89	1000	40	21.6	2.52	1000	37	20.8	2.88	1000	34.8	20.2	3.25	1000	30.6	18.4	3.23
	67.0 (19.4)		36.2	26	1.19		37	26.2	1.56		35.6	26	1.91		36.2	26.6	2.53		33.6	25.8	2.88		31.6	25.2	3.24		27.8	23.4	3.21
	63.0 (17.2)††		33.6	29.8	1.23		34.2	30.2	1.58		33	29.8	1.93		33.6	30.6	2.55		31.2	29.8	2.88		29.4	29.2	3.22		26.2	26.2	3.2
	57.0 (13.9)		32.4	31.8	1.24		33	32.2	1.6		32	31.6	1.95		32.2	32.2	2.55		30.2	30.2	2.88		28.8	28.8	3.23		26.2	26.2	3.21
H5A1V60 Minimum Demand																																
75 (23.9)	72.0 (22.2)	600	26.2	10.2	0.6	600	25.2	9.8	0.8	600	23.4	9.3	1.01	600	26.2	10.6	1.54	600	24.2	10	1.79	600	22.8	9.6	2.05	600	22	9.2	2.3
	67.0 (19.4)		23.6	13.2	0.65		22.6	12.8	0.84		21.2	12.3	1.04		23.6	13.5	1.57		21.8	13	1.8		20.6	12.5	2.06		19.9	12.2	2.31
	63.0 (17.2)††		21.8	15.6	0.69		20.8	15.2	0.87		19.5	14.6	1.07		21.8	15.8	1.59		20	15.3	1.81		18.9	14.8	2.06		18.2	14.6	2.29
	57.0 (13.9)		19.5	18.8	0.73		18.9	18.1	0.91		17.8	17.3	1.09		19.2	19.2	1.6		18	18	1.82		17.1	17.1	2.05		16.7	16.7	2.28
80 (26.7)	72.0 (22.2)	600	26	13.2	0.59	600	25	12.8	0.8	600	23.4	12.3	1.01	600	26.2	13.6	1.55	600	24.2	13	1.79	600	22.8	12.6	2.05	600	22	12.2	2.31
	67.0 (19.4)		23.6	16.2	0.65		22.6	15.8	0.84		21.2	15.3	1.05		23.6	16.5	1.57		21.8	16	1.81		20.4	15.5	2.04		19.8	15.3	2.3
	63.0 (17.2)††		21.8	18.6	0.69		20.8	18.2	0.87		19.5	17.6	1.07		21.8	18.8	1.59		20	18.3	1.81		18.9	17.8	2.06		18.2	17.6	2.29
	57.0 (13.9)		20.8	20	0.71		20.2	19.3	0.89		19	18.4	1.07		20.4	20.4	1.59		19.2	19.2	1.82		18.2	18.2	2.04		17.9	17.9	2.29

Detailed Cooling Capacities# - Cooling Efficiency Mode

EVAPORATOR AIR °F (°C)		CONDENSER ENTERING AIR TEMPERATURES °F (°C)																											
		65.0 (18.3)				75.0 (23.9)				85.0 (29.4)				95.0 (35.0)				105.0 (40.6)				115.0 (46.1)				125.0 (51.7)			
EDB	EWB	ID SCFM	Capacity MBtuh Total	Capacity MBtuh Sens‡	Total Sys. KW**	ID SCFM	Capacity MBtuh Total	Capacity MBtuh Sens‡	Total Sys. KW**	ID SCFM	Capacity MBtuh Total	Capacity MBtuh Sens‡	Total Sys. KW**	ID SCFM	Capacity MBtuh Total	Capacity MBtuh Sens‡	Total Sys. KW**	ID SCFM	Capacity MBtuh Total	Capacity MBtuh Sens‡	Total Sys. KW**	ID SCFM	Capacity MBtuh Total	Capacity MBtuh Sens‡	Total Sys. KW**	ID SCFM	Capacity MBtuh Total	Capacity MBtuh Sens‡	Total Sys. KW**
H5A1V24 Maximum Demand																													
75 (23.9)	72.0 (22.2)	770	28.4	10.7	1.29	770	27.8	10.6	1.51	770	27.4	10.7	1.81	770	26.2	10.3	2.06	770	25	9.8	2.32	770	23.6	9.2	2.58	770	16.9	6.7	2.07
	67.0 (19.4)		26	14.4	1.33		25.4	14.4	1.54		25	14.5	1.83		24	14.2	2.07		23	13.7	2.33		21.6	13.1	2.57		15.4	10.3	2.06
	63.0 (17.2)††		24.2	17.3	1.35		23.6	17.3	1.56		23.2	17.5	1.84		22.2	17.2	2.06		21.2	16.8	2.3		20.2	16.1	2.56		14.4	12.9	2.05
	57.0 (13.9)		22.2	21	1.37		21.6	20.8	1.56		21.4	21	1.83		20.8	20.4	2.06		20	19.5	2.29		19.1	18.4	2.53		14.3	13.1	2.04
80 (26.7)	72.0 (22.2)	770	28.4	14.3	1.29	770	27.6	14.3	1.5	770	27.2	14.4	1.8	770	26.2	14.1	2.07	770	25	13.6	2.33	770	23.6	13	2.6	770	16.8	10.2	2.07
	67.0 (19.4)		26	17.9	1.33		25.2	18	1.53		24.8	18.2	1.82		23.6	17.9	2.07		22.8	17.5	2.31		22	16.9	2.56		15.4	13.6	2.06
	63.0 (17.2)††		24.2	20.8	1.34		23.6	20.8	1.55		23.2	21.2	1.83		22.4	20.8	2.06		21.4	20.4	2.3		20.4	19.5	2.56		15.3	14	2.06
	57.0 (13.9)		23.6	22.2	1.36		23	22	1.56		22.8	22.2	1.84		22	21.6	2.06		21.2	20.6	2.3		20.4	19.5	2.57		15.3	14	2.06
H5A1V24 Intermediate Demand																													
75 (23.9)	72.0 (22.2)	580	16.1	6.5	0.51	580	15.4	6.4	0.63	535	15.2	6.3	0.76	580	15.5	6.4	0.98	580	14.7	6.1	1.14	625	13.7	5.8	1.3	625	10.7	4.8	1.25
	67.0 (19.4)		14.6	9.3	0.54		14	9.2	0.66		13.7	8.9	0.78		14	9.3	1		13.3	9	1.14		12.4	8.9	1.31		9.7	7.8	1.26
	63.0 (17.2)††		13.5	11.4	0.56		12.9	11.4	0.67		12.7	11	0.79		13	11.6	1		12.3	11.2	1.14		11.6	11.1	1.31		9.3	8.9	1.25
	57.0 (13.9)		13.1	12.5	0.57		12.6	12.3	0.68		12.3	12	0.8		12.7	12.4	1.01		12.1	11.8	1.14		11.6	11.1	1.31		9.3	8.9	1.25
80 (26.7)	72.0 (22.2)	580	16	9.3	0.51	580	15.3	9.2	0.63	535	15.1	9	0.76	580	15.4	9.3	0.98	580	14.6	9	1.14	625	13.6	8.9	1.3	625	10.6	7.8	1.26
	67.0 (19.4)		14.6	12	0.54		14	12	0.65		13.7	11.6	0.78		14	12.2	1		13.3	11.8	1.14		12.5	11.7	1.31		10	9.5	1.25
	63.0 (17.2)††		14	13.4	0.56		13.5	13.1	0.66		13.1	12.8	0.79		13.6	13.2	1.01		13	12.6	1.15		12.4	11.9	1.31		10	9.5	1.25
	57.0 (13.9)		13.9	13.4	0.55		13.4	13.1	0.66		13.1	12.8	0.79		13.5	13.2	1		13	12.6	1.15		12.4	11.9	1.31		10	9.5	1.25
H5A1V24 Minimum Demand																													
75 (23.9)	72.0 (22.2)	485	9.1	4	0.24	485	8.6	3.9	0.32	485	8.1	3.8	0.41	485	9.6	4.3	0.59	485	8.9	4.1	0.69	550	8.2	3.9	0.82	550	7.4	3.6	0.91
	67.0 (19.4)		8.2	6.2	0.27		7.7	6.1	0.34		7.3	6	0.43		8.6	6.7	0.61		8	6.5	0.7		7.4	6.5	0.83		6.6	6.1	0.91
	63.0 (17.2)††		7.8	7.4	0.28		7.4	7.1	0.35		7	6.8	0.43		8.1	8	0.61		7.7	7.5	0.71		7.2	7	0.82		6.6	6.2	0.91
	57.0 (13.9)		7.8	7.4	0.28		7.4	7.1	0.35		7	6.8	0.43		8.1	8	0.61		7.7	7.5	0.71		7.2	7	0.82		6.6	6.2	0.91
80 (26.7)	72.0 (22.2)	485	9.1	6.2	0.24	485	8.5	6.2	0.32	485	8	6.1	0.4	485	9.5	6.7	0.59	485	8.8	6.5	0.69	550	8.1	6.6	0.81	550	7.3	6.2	0.91
	67.0 (19.4)		8.4	7.9	0.26		8	7.7	0.33		7.6	7.3	0.41		8.8	8.4	0.6		8.3	8.1	0.7		7.8	7.5	0.81		7.1	6.7	0.91
	63.0 (17.2)††		8.4	7.9	0.26		8	7.7	0.33		7.6	7.3	0.41		8.7	8.6	0.6		8.3	8.1	0.7		7.8	7.5	0.82		7.1	6.8	0.91
	57.0 (13.9)		8.4	7.9	0.26		8	7.7	0.34		7.6	7.3	0.42		8.7	8.6	0.6		8.3	8.1	0.7		7.8	7.5	0.82		7.1	6.7	0.91

Detailed Cooling Capacities# - Cooling Efficiency Mode (Continued)

EVAPORATOR AIR °F (°C)		CONDENSER ENTERING AIR TEMPERATURES °F (°C)																														
		65.0 (18.3)				75.0 (23.9)				85.0 (29.4)				95.0 (35.0)				105.0 (40.6)				115.0 (46.1)				125.0 (51.7)			
EDB	EWB	ID SCFM	Capacity MBtuh Total	Capacity MBtuh Sens‡	Total Sys. KW**	ID SCFM	Capacity MBtuh Total	Capacity MBtuh Sens‡	Total Sys. KW**	ID SCFM	Capacity MBtuh Total	Capacity MBtuh Sens‡	Total Sys. KW**	ID SCFM	Capacity MBtuh Total	Capacity MBtuh Sens‡	Total Sys. KW**	ID SCFM	Capacity MBtuh Total	Capacity MBtuh Sens‡	Total Sys. KW**	ID SCFM	Capacity MBtuh Total	Capacity MBtuh Sens‡	Total Sys. KW**	ID SCFM	Capacity MBtuh Total	Capacity MBtuh Sens‡	Total Sys. KW**
H5A1V36 Maximum Demand																													
75 (23.9)	72.0 (22.2)	1150	42	16.8	1.61	1150	41	16.4	1.98	1150	39.5	15.9	2.38	1150	38	15.3	2.79	1150	36.2	14.7	3.18	1150	34.6	14.2	3.52	1150	32.2	13.5	3.59
	67.0 (19.4)		38	22.4	1.62		37.2	22	2		36	21.4	2.4		34.4	20.8	2.78		32.8	20.2	3.16		31.4	19.8	3.5		29.2	19.2	3.55
	63.0 (17.2)††		35.2	26.8	1.63		34.4	26.4	2		33.2	25.8	2.39		31.8	25.2	2.77		30.4	24.6	3.15		29	24.2	3.47		27	23.6	3.52
	57.0 (13.9)		32.2	32.2	1.64		31.6	31.6	2.01		30.6	30.6	2.39		29.6	29.6	2.77		28.4	28.4	3.13		27.2	27.2	3.43		25.8	25.8	3.51
80 (26.7)	72.0 (22.2)	1150	42	22.4	1.61	1150	41	22	1.99	1150	39.5	21.4	2.39	1150	38	20.8	2.8	1150	36.2	20.4	3.18	1150	34.6	19.8	3.52	1150	32.2	19.2	3.59
	67.0 (19.4)		38	28	1.62		37.2	27.6	2		35.8	27	2.39		35	27	2.89		32.8	25.8	3.17		31.8	25.8	3.49		28.8	24.6	3.66
	63.0 (17.2)††		35.4	32.2	1.63		34.6	31.8	2		33.4	31.2	2.39		32	30.6	2.77		30.6	29.8	3.14		29.4	29.2	3.48		27.6	27.6	3.55
	57.0 (13.9)		34	34	1.63		33.4	33.4	2		32.6	32.6	2.4		31.4	31.4	2.77		30.2	30.2	3.15		29	29	3.46		27.4	27.4	3.52
H5A1V36 Intermediate Demand																													
75 (23.9)	72.0 (22.2)	795	21	8.9	0.53	795	20.2	8.6	0.67	670	19.2	8.1	0.79	715	21.2	9	1.14	770	20.2	8.7	1.34	765	19.1	8.4	1.51	760	17.6	7.9	1.64
	67.0 (19.4)		18.9	12.8	0.56		18.3	12.6	0.7		17.3	11.5	0.82		19.2	12.6	1.16		18.2	12.6	1.35		17.2	12.3	1.51		15.8	11.8	1.64
	63.0 (17.2)††		17.5	15.7	0.58		16.9	15.5	0.72		15.9	14.1	0.83		17.6	15.4	1.16		16.8	15.5	1.36		15.9	15.1	1.52		14.6	14.5	1.63
	57.0 (13.9)		16.9	16.9	0.59		16.4	16.4	0.72		15.3	15.2	0.84		16.8	16.8	1.17		16.3	16.3	1.36		15.5	15.5	1.51		14.5	14.5	1.64
80 (26.7)	72.0 (22.2)	795	20.8	12.8	0.52	795	20.2	12.6	0.67	670	19.2	11.6	0.79	715	21.2	12.7	1.14	770	20.2	12.7	1.34	765	19	12.3	1.51	760	17.5	11.8	1.64
	67.0 (19.4)		18.9	16.6	0.55		18.3	16.3	0.7		17.3	14.8	0.82		19.1	16.2	1.15		18.2	16.4	1.35		17.2	16	1.51		15.9	15.4	1.64
	63.0 (17.2)††		18.1	18.1	0.57		17.6	17.6	0.7		16.4	16.3	0.83		18	18	1.16		17.5	17.5	1.36		16.6	16.6	1.51		15.6	15.6	1.64
	57.0 (13.9)		18.1	18.1	0.57		17.6	17.5	0.71		16.4	16.3	0.83		17.9	17.9	1.16		17.5	17.5	1.36		16.6	16.6	1.51		15.6	15.6	1.64
H5A1V36 Minimum Demand																													
75 (23.9)	72.0 (22.2)	615	8.9	4.5	0.16	615	8.4	4.4	0.23	615	7.9	4.2	0.31	550	12.3	5.4	0.6	580	11.5	5.3	0.72	575	10.7	5	0.82	570	10	4.8	0.93
	67.0 (19.4)		8	7.5	0.18		7.6	7.3	0.25		7.1	7	0.33		11	8.2	0.61		10.3	8.2	0.74		9.6	7.9	0.84		8.9	7.7	0.93
	63.0 (17.2)††		7.9	7.9	0.19		7.5	7.5	0.26		7	7	0.32		10.2	10	0.62		9.7	9.6	0.74		9.1	9	0.84		8.5	8.5	0.93
	57.0 (13.9)		7.8	7.8	0.19		7.5	7.5	0.26		7	7	0.32		10.1	10	0.62		9.7	9.6	0.74		9.1	9	0.84		8.5	8.5	0.93
80 (26.7)	72.0 (22.2)	615	8.8	7.6	0.16	615	8.4	7.4	0.23	615	7.9	7.2	0.31	550	12.2	8.3	0.59	580	11.4	8.3	0.72	575	10.6	8	0.82	570	9.9	7.8	0.93
	67.0 (19.4)		8.5	8.5	0.17		8.1	8.1	0.24		7.7	7.7	0.31		11	10.7	0.61		10.5	10.4	0.73		9.9	9.6	0.83		9.3	9.3	0.93
	63.0 (17.2)††		8.5	8.5	0.17		8.1	8.1	0.24		7.7	7.7	0.31		10.9	10.8	0.61		10.5	10.4	0.73		9.9	9.8	0.83		9.3	9.3	0.93
	57.0 (13.9)		8.5	8.5	0.17		8.1	8.1	0.24		7.7	7.7	0.31		10.9	10.8	0.61		10.5	10.3	0.73		9.9	9.8	0.83		9.3	9.3	0.93

Manufacturer reserves the right to change, at any time, specifications and designs without notice and without obligations.

Detailed Cooling Capacities# - Cooling Efficiency Mode (Continued)

EVAPORATOR AIR °F (°C)		CONDENSER ENTERING AIR TEMPERATURES °F (°C)																														
		65.0 (18.3)				75.0 (23.9)				85.0 (29.4)				95.0 (35.0)				105.0 (40.6)				115.0 (46.1)				125.0 (51.7)			
EDB	EWB	ID SCFM	Capacity MBtuh Total	Capacity MBtuh Sens‡	Total Sys. KW**	ID SCFM	Capacity MBtuh Total	Capacity MBtuh Sens‡	Total Sys. KW**	ID SCFM	Capacity MBtuh Total	Capacity MBtuh Sens‡	Total Sys. KW**	ID SCFM	Capacity MBtuh Total	Capacity MBtuh Sens‡	Total Sys. KW**	ID SCFM	Capacity MBtuh Total	Capacity MBtuh Sens‡	Total Sys. KW**	ID SCFM	Capacity MBtuh Total	Capacity MBtuh Sens‡	Total Sys. KW**	ID SCFM	Capacity MBtuh Total	Capacity MBtuh Sens‡	Total Sys. KW**
H5A1V48 Maximum Demand																																
75 (23.9)	72.0 (22.2)	1350	51.5	21.2	2.15	1350	52	20.2	2.6	1350	52	21.2	3.54	1350	47	20.4	4.02	1350	42.5	19.6	4.46	1350	40	18.5	4.88	1350	34	13.9	3.9
	67.0 (19.4)		47	28.2	2.18		47	26.8	2.6		47.5	28.2	3.55		42.5	27.2	3.96		38.5	26.4	4.39		36.4	25.4	4.81		31	20.4	3.88
	63.0 (17.2)††		43.5	33.6	2.19		44	32.2	2.63		44	33.4	3.54		39.5	32.6	3.95		35.8	31.8	4.38		33.6	30.6	4.75		28.8	25.4	3.85
	57.0 (13.9)		39.5	39.5	2.21		40	39	2.64		39.5	39.5	3.49		36	36	3.93		32.8	32.8	4.33		31.2	31.2	4.7		27.8	27.4	3.82
80 (26.7)	72.0 (22.2)	1350	51	28	2.13	1350	51.5	26.8	2.58	1350	52	28	3.55	1350	47	27.2	4.02	1350	42	26.4	4.42	1350	39.5	25.2	4.84	1350	33.8	20.2	3.9
	67.0 (19.4)		46.5	34.8	2.16		47	33.4	2.6		47.5	34.8	3.56		46.5	33.6	3.99		38.5	33	4.42		32.6	32.6	4.5		31	26.4	3.88
	63.0 (17.2)††		43.5	40	2.19		44	38.5	2.63		44	40	3.54		39.5	39	3.95		35.8	35.8	4.37		33.8	33.8	4.76		29.6	29.4	3.84
	57.0 (13.9)		41.5	41.5	2.19		42	41.5	2.61		42	42	3.53		38	38	3.93		34.8	34.8	4.36		33	33	4.73		29.6	29.4	3.84
H5A1V48 Intermediate Demand																																
75 (23.9)	72.0 (22.2)	900	28.8	12.1	0.76	900	28.6	11.4	1	900	28.2	11.5	1.3	915	30	12.6	1.89	1075	27.4	12.4	2.22	1000	25.6	11.6	2.44	1075	23	9.9	2.43
	67.0 (19.4)		26.2	16.8	0.81		26	16	1.04		25.6	16	1.33		27.2	17.2	1.9		24.8	17.8	2.22		23.2	16.6	2.44		20.8	15.2	2.41
	63.0 (17.2)††		24.2	20.4	0.84		24.2	19.6	1.07		23.8	19.5	1.36		25.2	20.8	1.91		23	21.8	2.23		21.4	20.4	2.42		19.4	18.9	2.41
	57.0 (13.9)		22.8	22.8	0.86		23	22	1.08		22.4	22	1.36		23.4	23.4	1.91		22	22	2.22		20.6	20.6	2.42		19.3	19.1	2.41
80 (26.7)	72.0 (22.2)	900	28.6	16.8	0.76	900	28.4	16	0.99	900	28.2	16	1.31	915	29.8	17.2	1.88	1075	27.2	17.7	2.22	1000	25.4	16.6	2.44	1075	22.8	15.1	2.43
	67.0 (19.4)		26	21.4	0.8		26	20.6	1.04		25.6	20.4	1.34		27.2	21.8	1.9		24.8	23	2.23		23.2	21.4	2.44		20.8	20	2.41
	63.0 (17.2)††		24.4	24.4	0.83		24.4	23.2	1.05		24	23.2	1.35		25.2	25.2	1.9		23.6	23.6	2.23		22	22	2.43		20.6	20.4	2.41
	57.0 (13.9)		24.2	24.2	0.84		24.4	23.4	1.06		24	23.4	1.36		24.8	24.8	1.9		23.6	23.6	2.23		22	22	2.43		20.6	20.4	2.41
H5A1V48 Minimum Demand																																
75 (23.9)	72.0 (22.2)	750	15.3	7.2	0.29	750	14.9	6.8	0.43	750	13.7	6.4	0.57	750	19.6	8.7	1.13	700	17.8	8.8	1.38	700	16.5	8.1	1.52	700	16.6	7.7	1.74
	67.0 (19.4)		13.8	11.1	0.34		13.4	10.6	0.47		12.3	10.2	0.6		17.7	12.6	1.15		16	13.5	1.4		14.9	12.3	1.54		15	12.3	1.75
	63.0 (17.2)††		13	13	0.36		12.8	12.5	0.48		11.9	11.7	0.62		16.4	15.5	1.17		15.1	15.1	1.41		13.9	13.9	1.54		14.3	14.3	1.74
	57.0 (13.9)		13	13	0.36		12.7	12.5	0.48		11.8	11.7	0.61		15.9	15.9	1.17		15	15	1.41		13.8	13.8	1.54		14.3	14.3	1.74
80 (26.7)	72.0 (22.2)	750	15.1	11.1	0.29	750	14.7	10.6	0.43	750	13.6	10.3	0.57	750	19.4	12.6	1.12	700	17.6	13.5	1.38	700	16.3	12.3	1.52	700	16.4	12.3	1.74
	67.0 (19.4)		14	14	0.32		13.7	13.4	0.46		12.8	12.6	0.59		17.7	16.3	1.15		16.1	16.1	1.39		14.9	14.9	1.53		15.4	15.4	1.74
	63.0 (17.2)††		14	14	0.33		13.7	13.4	0.46		12.8	12.6	0.59		17	17	1.16		16.1	16.1	1.39		14.8	14.8	1.53		15.4	15.3	1.75
	57.0 (13.9)		14	14	0.33		13.7	13.4	0.46		12.7	12.6	0.59		17	17	1.16		16.1	16.1	1.4		14.8	14.8	1.53		15.4	15.3	1.75

Manufacturer reserves the right to change, at any time, specifications and designs without notice and without obligations.

Detailed Cooling Capacities# - Cooling Efficiency Mode (Continued)

EVAPORATOR AIR °F (°C)		CONDENSER ENTERING AIR TEMPERATURES °F (°C)																														
		65.0 (18.3)				75.0 (23.9)				85.0 (29.4)				95.0 (35.0)				105.0 (40.6)				115.0 (46.1)				125.0 (51.7)			
EDB	EWB	ID SCFM	Capacity MBtuh Total	Capacity MBtuh Sens‡	Total Sys. KW**	ID SCFM	Capacity MBtuh Total	Capacity MBtuh Sens‡	Total Sys. KW**	ID SCFM	Capacity MBtuh Total	Capacity MBtuh Sens‡	Total Sys. KW**	ID SCFM	Capacity MBtuh Total	Capacity MBtuh Sens‡	Total Sys. KW**	ID SCFM	Capacity MBtuh Total	Capacity MBtuh Sens‡	Total Sys. KW**	ID SCFM	Capacity MBtuh Total	Capacity MBtuh Sens‡	Total Sys. KW**	ID SCFM	Capacity MBtuh Total	Capacity MBtuh Sens‡	Total Sys. KW**
H5A1V60 Maximum Demand																													
75 (23.9)	72.0 (22.2)	1625	65	26.2	2.86	1625	69	27.4	3.72	1625	67	27	4.5	1625	62.5	25.8	5.09	1625	58	24.6	5.69	1625	55	23.4	6.31	1625	47	20.4	5.69
	67.0 (19.4)		59	34.6	2.86		62.5	35.6	3.7		61	35.2	4.49		57	33.8	5.07		53	32.6	5.64		50	31.6	6.2		42.5	28.8	5.58
	63.0 (17.2)††		55	41	2.89		58	42	3.7		56.5	41.5	4.47		53	40	5.06		49	39	5.58		46.5	38	6.15		39.5	35.4	5.55
	57.0 (13.9)		50	50	2.89		52	51.5	3.69		51	50.5	4.45		47.5	47.5	4.98		44.5	44.5	5.51		42.5	42.5	6.05		37.6	37.6	5.51
80 (26.7)	72.0 (22.2)	1625	64.5	34.4	2.85	1625	68	35.4	3.67	1625	67	35	4.51	1625	62.5	33.6	5.11	1625	58	32.4	5.71	1625	54.5	31.4	6.28	1625	46.5	28.6	5.66
	67.0 (19.4)		59	42.5	2.87		62.5	43.5	3.71		61	43	4.5		58	41.5	5.09		53	40.5	5.66		48.5	39.5	6.03		42.5	37	5.62
	63.0 (17.2)††		55	49	2.88		58	50	3.71		56.5	49.5	4.47		53	48	5.06		49	46.5	5.58		46.5	45.5	6.15		40	40	5.56
	57.0 (13.9)		52.5	52.5	2.88		55	55	3.72		53.5	53.5	4.46		50.5	50.5	5.04		47	47	5.53		45	45	6.1		40	40	5.57
H5A1V60 Intermediate Demand																													
75 (23.9)	72.0 (22.2)	1065	37	14.8	0.99	1065	38	15.1	1.34	1025	36.8	14.8	1.69	1070	40.5	16.7	2.53	1210	38	16.3	2.95	1310	36	15.8	3.36	1365	31.4	14	3.36
	67.0 (19.4)		33.8	20.2	1.05		34.6	20.6	1.4		33.4	20	1.74		36.8	22.2	2.56		34.6	22.4	2.96		32.8	22.4	3.36		28.6	21	3.36
	63.0 (17.2)††		31.2	24.4	1.09		32	24.8	1.43		30.8	24	1.76		34	26.4	2.57		32	27.2	2.96		30.2	27.6	3.33		26.6	26.4	3.34
	57.0 (13.9)		29.2	28.4	1.12		29.8	28.8	1.46		28.4	28	1.77		31	31	2.57		30	30	2.95		29	29	3.33		26.2	26.2	3.32
80 (26.7)	72.0 (22.2)	1065	36.8	20.2	0.99	1065	37.8	20.4	1.34	1025	36.6	19.9	1.69	1070	40.5	22.2	2.54	1210	37.8	22.4	2.94	1310	35.8	22.4	3.36	1365	31.2	21	3.36
	67.0 (19.4)		33.6	25.4	1.05		34.4	25.8	1.39		33.2	25	1.73		36.6	27.6	2.55		34.4	28.4	2.95		32.6	29	3.35		28.6	27.8	3.36
	63.0 (17.2)††		31.4	29.6	1.09		32	30	1.42		30.8	29	1.75		34	31.8	2.56		32.2	32.2	2.96		31	31	3.34		28.2	28.2	3.37
	57.0 (13.9)		31	30.2	1.09		31.6	30.8	1.43		30.4	29.8	1.76		32.8	32.8	2.56		32	32	2.96		31	31	3.35		28	28	3.34
H5A1V60 Minimum Demand																													
75 (23.9)	72.0 (22.2)	785	21.2	8.9	0.4	785	20.2	8.5	0.58	785	18.8	8.1	0.76	795	27.4	11.3	1.55	1000	26	11.3	1.85	1150	24.4	11.1	2.16	1235	23.4	10.9	2.45
	67.0 (19.4)		19.2	12.8	0.46		18.3	12.5	0.63		16.9	12	0.8		24.8	15.2	1.58		23.4	16.2	1.87		22	16.8	2.17		21.2	17.1	2.47
	63.0 (17.2)††		17.8	15.9	0.5		16.9	15.5	0.66		15.7	15	0.82		22.8	18.3	1.6		21.6	20	1.88		20.6	20.6	2.17		20	20	2.44
	57.0 (13.9)		17.4	16.8	0.51		16.7	16.1	0.66		15.6	15.2	0.82		21.2	21.2	1.62		21	21	1.88		20.4	20.4	2.17		20	20	2.45
80 (26.7)	72.0 (22.2)	785	21.2	12.8	0.4	785	20.2	12.5	0.58	785	18.6	12	0.76	795	27.4	15.2	1.56	1000	25.8	16.2	1.85	1150	24.2	16.8	2.15	1235	23.2	17.1	2.46
	67.0 (19.4)		19.2	16.8	0.45		18.3	16.4	0.63		16.9	15.9	0.79		24.8	19.1	1.59		23.4	21.2	1.87		22.2	22.2	2.18		21.6	21.6	2.46
	63.0 (17.2)††		18.7	18	0.47		17.9	17.2	0.63		16.8	16.3	0.8		23	22.2	1.61		22.6	22.6	1.88		22	22	2.17		21.6	21.6	2.46
	57.0 (13.9)		18.6	18	0.47		17.9	17.2	0.63		16.7	16.3	0.8		22.6	22.6	1.6		22.6	22.6	1.88		22	22	2.17		21.6	21.6	2.47

† Total and sensible capacities are net capacities. Blower motor heat has been subtracted.
‡ Sensible capacities shown are based on 80°F (27°C) entering air at the indoor coil. For sensible capacities at other than 80°F (27°C), deduct 835 Btuh (245 kW) per 1000 CFM (480 L/S) of indoor coil air for each degree below 80°F (27°C), or add 835 Btuh (245 kW) per 1000 CFM (480 L/S) of indoor coil air per degree above 80°F (27°C).
** System kw is total of indoor and outdoor unit kilowatts.
# Detailed cooling capacities are based on indoor and outdoor unit at the same elevation per AHRI standard 210/240-08. If additional tubing length and/or indoor unit is located above outdoor unit, a slight variation in capacity may occur.
NOTE: When the required data falls between the published data, interpolation may be performed. Extrapolation is not an acceptable practice.
EDB — Entering Dry Bulb
EWB — Entering Wet Bulb

Manufacturer reserves the right to change, at any time, specifications and designs without notice and without obligations.

Guide specifications
General

AIR-COOLED, SPLIT-SYSTEM AIR CONDITIONER
H5A1V
2 TO 5 NOMINAL TONS

System Description

Outdoor-mounted, air-cooled, split-system air conditioning unit suitable for ground or rooftop installation. Unit consists of a hermetic compressor, an air-cooled coil, forward-swept blade propeller-type condenser fan, and a control box. Unit will discharge supply air upward as shown on contract drawings. Unit will be used in a refrigeration circuit to match up to a packaged fan coil or furnace coil unit.

Quality Assurance

- Unit will be rated in accordance with the latest edition of AHRI Standard 240.
- Unit will be certified for capacity and efficiency, and listed in the latest AHRI directory.
- Unit construction will comply with latest edition of ASHRAE and with NEC.
- Unit will be constructed in accordance with UL standards and will carry the UL label of approval. Unit will have C-UL approval.
- Unit cabinet will be capable of withstanding Federal Test Method Standard No. 141 (Method 6061) 500-hr salt spray test.
- Air-cooled condenser coils are pressure tested and the outdoor units are leak tested.
- Unit constructed in ISO9001 approved facility.

Delivery, Storage, and Handling

- Unit will be shipped as single package only and is stored and handled per unit manufacturer's recommendations.

Warranty (for inclusion by specifying engineer)

- U.S. and Canada only.

PRODUCTS

Equipment

- Factory-assembled, single-piece, air-cooled air conditioner. Contained within the unit enclosure is all factory wiring, piping, controls, compressor, R-454B refrigerant charge, and special features required prior to field start-up.

Unit Cabinet

- Unit cabinet will be constructed of galvanized steel, bonderized and coated with a powder coat paint.

Fans

- Condenser fan will be direct-drive propeller type, forward swept blade, discharging air upward.
- Condenser fan motors will be totally enclosed, 1-phase DC type with class B insulation and permanently lubricated.
- Fan blades will be statically and dynamically balanced.
- Condenser fan openings will be equipped with coated steel wire safety guards.

Compressor

- Compressor will be hermetically sealed.
- Compressor will be mounted on rubber vibration isolators.
- Compressor will be covered with a sound absorbing blanket.

Condenser Coil

- Condenser coil will be air cooled.
- Coil will be constructed of aluminum fins mechanically bonded to copper or aluminum tubes which are then cleaned, dehydrated, and sealed.

Refrigeration Components

- Refrigeration circuit components will include liquid-line and vapor line front-seating shutoff valves with provisions for sweat or mechanical connections, system charge of R-454B refrigerant, PVE compressor oil, accumulator and pressure equalization valve.
- Unit will be equipped with high-pressure switch, suction and discharge pressure transducers, and field installed filter drier for R-454B refrigerant.

Operating Characteristics

- The capacity of the unit will meet or exceed _____ Btuh at a suction temperature of _____ °F (°C). The power consumption at full load will not exceed _____ kW.
- Combination of the unit and the evaporator or fan coil unit will have a total net cooling capacity of _____ Btuh or greater at conditions of _____ CFM entering air temperature at the evaporator at _____ °F (°C) wet bulb and _____ °F (°C) dry bulb, and air entering the unit at _____ °F (°C).
- The system will have a SEER2 of _____ Btuh/watt or greater at DOE conditions.

Electrical Requirements

- Nominal unit electrical characteristics will be _____ v, single phase, 60 hz. The unit will be capable of satisfactory operation within voltage limits of _____ v to _____ v.
- Unit electrical power will be single point connection.
- Control circuit will be 24v.

Special Features

- Refer to section of this literature identifying accessories and descriptions for specific features and available enhancements.
- Ion™ Black System Control with latest software version is required for full featured operation.

Manufacturer reserves the right to change, at any time, specifications and designs without notice and without obligations.

System Design Summary

1. System must be installed with factory approved R-454B Indoor unit only.
2. Factory authorized dissipation control board must be installed with indoor unit.
3. Intended for outdoor installation with free air inlet and outlet. Outdoor fan external static pressure available is less than 0.01-in. wc.
4. This product is qualified for low ambient cooling operation (below 55°F / 12.8°C) when enabled with an Ion™ Black System Control **ONLY**.
5. The maximum outdoor operating ambient in cooling mode is 125°F (51.7°C).
6. For reliable operation, unit must be level in all horizontal planes.
7. For interconnecting refrigerant tube lengths greater than 80 ft (23.4 m) and/or elevation differences between indoor and outdoor units greater than 20 ft (6.1 m), consult Residential Piping and Long Line Guideline and Service Manual available from equipment distributor.
8. If any refrigerant tubing is buried, provide a 6 in. (152.4 mm) vertical rise to the valve connections at the unit. Refrigerant tubing lengths up to 36 in. (914.4 mm) may be buried without further consideration. Do not bury refrigerant lines longer than 36 in. (914.4 mm).
9. Use only copper wire for electrical connection at unit. Aluminum and clad aluminum are not acceptable for the type of connector provided.
10. Do not apply capillary tube indoor coils to these units.
11. Factory-supplied filter drier must be installed.

© 2024 Carrier. All rights reserved.

Manufacturer reserves the right to change, at any time, specifications and designs without notice and without obligations.