619PB
High Wall Ductless System
Sizes 09 to 36

Installation Instructions

Fig. 1 — Sizes 09K-36K

Fig. 2 — Remote Controller

NOTES:

Read the entire instruction manual before starting the installation.

Images are for illustration purposes only. Actual models may differ slightly.

TABLE OF CONTENTS

SAFETY CONSIDERATIONS....2
PARTS LIST....3
SYSTEM REQUIREMENTS....4
WIRING....4
DIMENSIONS....5
CLEARANCES....9
INSTALLATION TIPS....10
INDOOR UNIT INSTALLATION....10
ELECTRICAL DATA....11
CONNECTION DIAGRAMS....11
WIRELESS REMOTE CONTROL INSTALLATION....13
WIRED REMOTE CONTROL INSTALLATION....13
START-UP....13
TROUBLESHOOTING....14

Specifications subject to change without notice.

SAFETY CONSIDERATIONS

Installing, starting up, and servicing air-conditioning equipment can be hazardous due to system pressures, electrical components, and equipment location (roofs, elevated structures, etc.).

Only trained, qualified installers and service mechanics should install, start-up, and service this equipment.

Untrained personnel can perform basic maintenance functions such as coil cleaning. All other operations should be performed only by trained service personnel.

When working on the equipment, observe precautions in the literature and on tags, stickers, and labels attached to the equipment.

Follow all safety codes. Wear safety glasses and work gloves. Keep a quenching cloth and fire extinguisher nearby when brazing. Use care in handling, rigging, and setting bulky equipment.

Read these instructions thoroughly and follow all warnings or cautions included in the literature and attached to the unit. Consult the local building codes and National Electrical Code (NEC) for special requirements. Recognize safety information. This is the safety-alert symbol ⚠. When you see this symbol on the unit and in instructions or manuals, be alert to the potential for personal injury. Understand these signal words: **DANGER**, **WARNING**, and **CAUTION**. These words are used with the safety-alert symbol. **DANGER** identifies the most serious hazards which will result in severe personal injury or death. **WARNING** signifies hazards which could result in personal injury or death. **CAUTION** is used to identify unsafe practices which may result in minor personal injury or product and property damage. **NOTE** is used to highlight suggestions which will result in enhanced installation, reliability, or operation.

⚠ WARNING

ELECTRICAL SHOCK HAZARD

Failure to follow this warning could result in personal injury or death.

Before installing, modifying, or servicing system, main electrical disconnect switch must be in the OFF position. There may be more than 1 disconnect switch. Lock out and tag switch with a suitable warning label.

⚠ WARNING

EXPLOSION HAZARD

Failure to follow this warning could result in death, serious personal injury, and/or property damage.

Never use air or gases containing oxygen for leak testing or operating refrigerant compressors. Pressurized mixtures of air or gases containing oxygen can lead to an explosion.

⚠ CAUTION

EQUIPMENT DAMAGE HAZARD

Failure to follow this caution may result in equipment damage or improper operation.

Do not bury more than 36 in. (914 mm) of refrigerant pipe in the ground. If any section of pipe is buried, there must be a 6 in. (152 mm) vertical rise to the valve connections on the outdoor units. If more than the recommended length is buried, refrigerant may migrate to the cooler buried section during extended periods of system shutdown. This causes refrigerant slugging and could possibly damage the compressor at start-up.

PARTS LIST

Table 1 — Parts List

Part No.	Part Name	Qty
1	Indoor Unit	1
2	Mounting Plate	1
3	Mounting Screw A ST3.9x25-C-H	5
4	Anchor	5
5	Air Filter	1
6	Wireless Remote Control	1
7	Wireless Remote Control Holder	1
8	Wireless Remote Control Mounting Screw B ST2.0x10-C-H	2
-	Flare nuts for liquid and gas pipes	1
-	Stencil (Mounting Template)	1
-	Installation Instructions	1
-	Owner's manual	1
-	Warranty Card	1
-	Carbon Filter	1

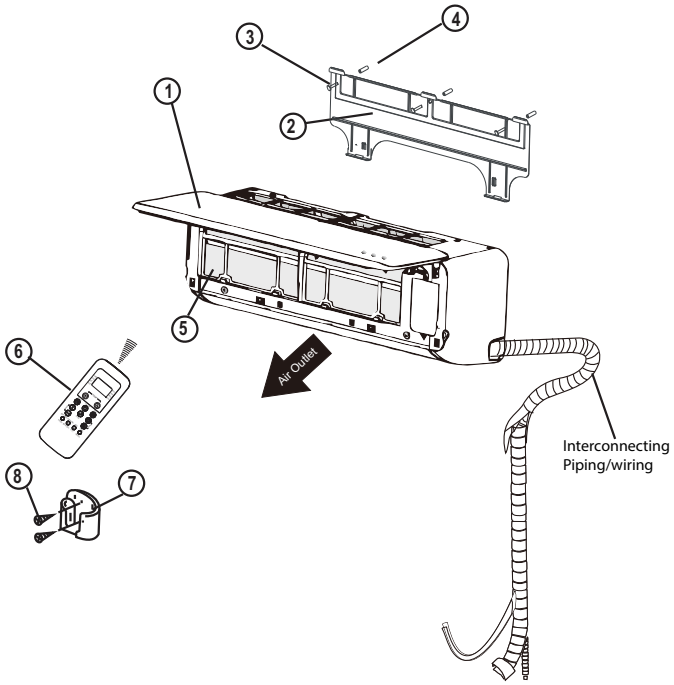

Fig. 3 — Parts List

NOTES:

- **If the outdoor unit is higher than the indoor unit, prevent rain from flowing into the indoor unit along the connection pipe by making a inverted trap in the connection pipe before it enters the wall to the indoor unit. This ensures that rain drips from the connection pipe before it enters the wall.**
- **Piping and the interconnecting wiring are field supplied.**
- **The illustration above (Fig. 3) is only a sketch. Different models may be differ slightly.**

The units listed in Table 2 are covered in these installation instructions.

Table 2 — Indoor Units

Description	kBTUh	V-Ph-Hz	ID Model No.
High Wall Heat Pump	12	115-1-60	619PAQ012BBMA
	9	208/230-1-60	619PEQ009BBMA
	12	208/230-1-60	619PEQ012BBMA
	18	208/230-1-60	619PEQ018BBMA
	24	208/230-1-60	619PEQ024BBMA
	30	208/230-1-60	619PEQ030BBMA
	36	208/230-1-60	619PEQ036BBMA

SYSTEM REQUIREMENTS

Allow sufficient space for airflow and unit service. See Fig. 8 — on page 9 for the minimum required distances between the unit and walls or ceilings.

Piping

IMPORTANT: Both refrigerant lines must be insulated separately.

- Table 3 lists the pipe sizes for the indoor unit. Refer to the outdoor unit's installation instructions for other allowed piping lengths and refrigerant information.

Table 3 — Indoor Unit Pipe Sizes

UNIT SIZES		12K (115V)	9K (208/230V)	12K (208/230V)	18K (208/230V)	24K (208/230V)	30K (208/230V)	36K (208/230V)
GAS PIPE	in	1/2	3/8	1/2	1/2	5/8	5/8	5/8
	(mm)	12.7	9.52	12.7	12.7	16	16	16
LIQUID PIPE	in	1/4	1/4	1/4	1/4	3/8	3/8	3/8
	(mm)	6.35	6.35	6.35	6.35	9.52	9.52	9.52

WIRING

All wires must be sized per NEC (National Electrical Code) or CEC (Canadian Electrical Code) and local codes. See the rating plate and/or the installation instructions of the compatible outdoor unit for MCA (minimum circuit amps) and MOCP (maximum over current protection) to correctly size the wires and the disconnect fuse or breakers respectively.

Recommended Connection Method for Power and Communication Wiring:

The main power is supplied to the outdoor unit. The field supplied 14/3 power/communication wiring from the outdoor unit to the indoor unit consists of four (4) wires and provides the power for the indoor unit. Two wires are high voltage AC power, one is communication wiring and the other is a ground wire. Wiring between the indoor and outdoor unit is polarity sensitive. The use of BX wire is NOT recommended.

If installed in a high Electromagnetic field (EMF) area and communication issues exists, a 14/2 stranded shielded wire can be used to replace L2/N and (S) between outdoor unit and indoor unit landing the shield onto ground in the outdoor unit only.

⚠ WARNING

EQUIPMENT DAMAGE HAZARD

Failure to follow this caution may result in equipment damage or improper operation.

Wires should be sized based on NEC and local codes.

⚠ CAUTION

EQUIPMENT DAMAGE HAZARD

Failure to follow this caution may result in equipment damage or improper operation.
Be sure to comply with local codes while running wire from the indoor unit to the outdoor unit.
Every wire must be connected firmly. Loose wiring may cause the terminal to overheat or result in unit malfunction. A fire hazard may also exist. Ensure all wiring is tightly connected.
No wire should touch the refrigerant tubing, compressor or any moving parts.
Disconnecting means must be provided and shall be located within sight and readily accessible from the air conditioner.
Connecting cable with conduit shall be routed through the hole in the conduit panel.

NOTE: The main power is supplied to the outdoor unit. When disconnecting the power of the outdoor unit, the indoor unit would lose power. A disconnect switch is not required on the Indoor unit side on the wiring between the Outdoor and Indoor unit. A 3 pole disconnect may be used for extra protection between the Indoor and Outdoor Unit.

DIMENSIONS

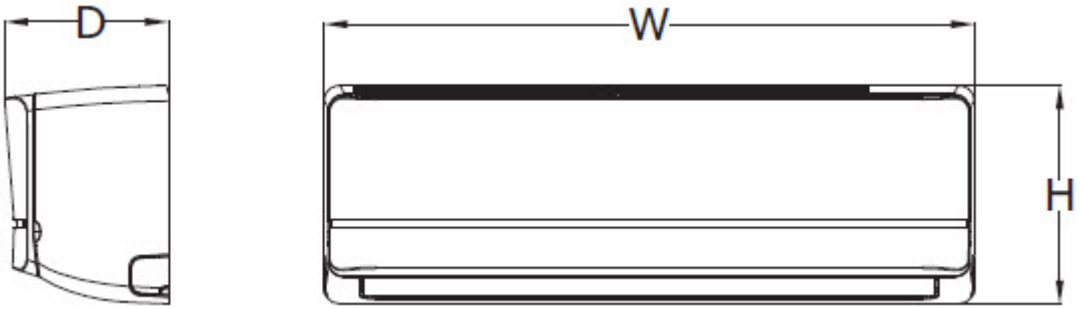

Fig. 4 — Indoor Unit

Table 4 — Dimensions

High Wall Unit Size		12K	9K	12K	18K	24K	30K	36K
Voltage		(115V)	(208/230V)	(208/230V)	(208/230V)	(208/230V)	(208/230V)	(208/230V)
Height	In (mm)	11.07 (281)	11.07 (281)	11.07 (281)	12.40 (315)	13.39 (343)	13.39 (343)	13.39 (343)
Width	In (mm)	33.17 (842)	33.17 (842)	33.17 (842)	38.98 (990)	46.69 (1186)	46.69 (1186)	46.69 (1186)
Depth	In (mm)	8.75 (222)	8.75 (222)	8.75 (222)	8.58 (218)	10.16 (258)	10.16 (258)	10.16 (258)
Weight- Net	Lbs (kg)	19.18 (8.7)	19.18 (8.7)	19.18 (8.7)	24.46 (12.0)	40.12 (18.2)	40.12 (18.2)	40.12 (18.2)

DIMENSIONS (CONT)

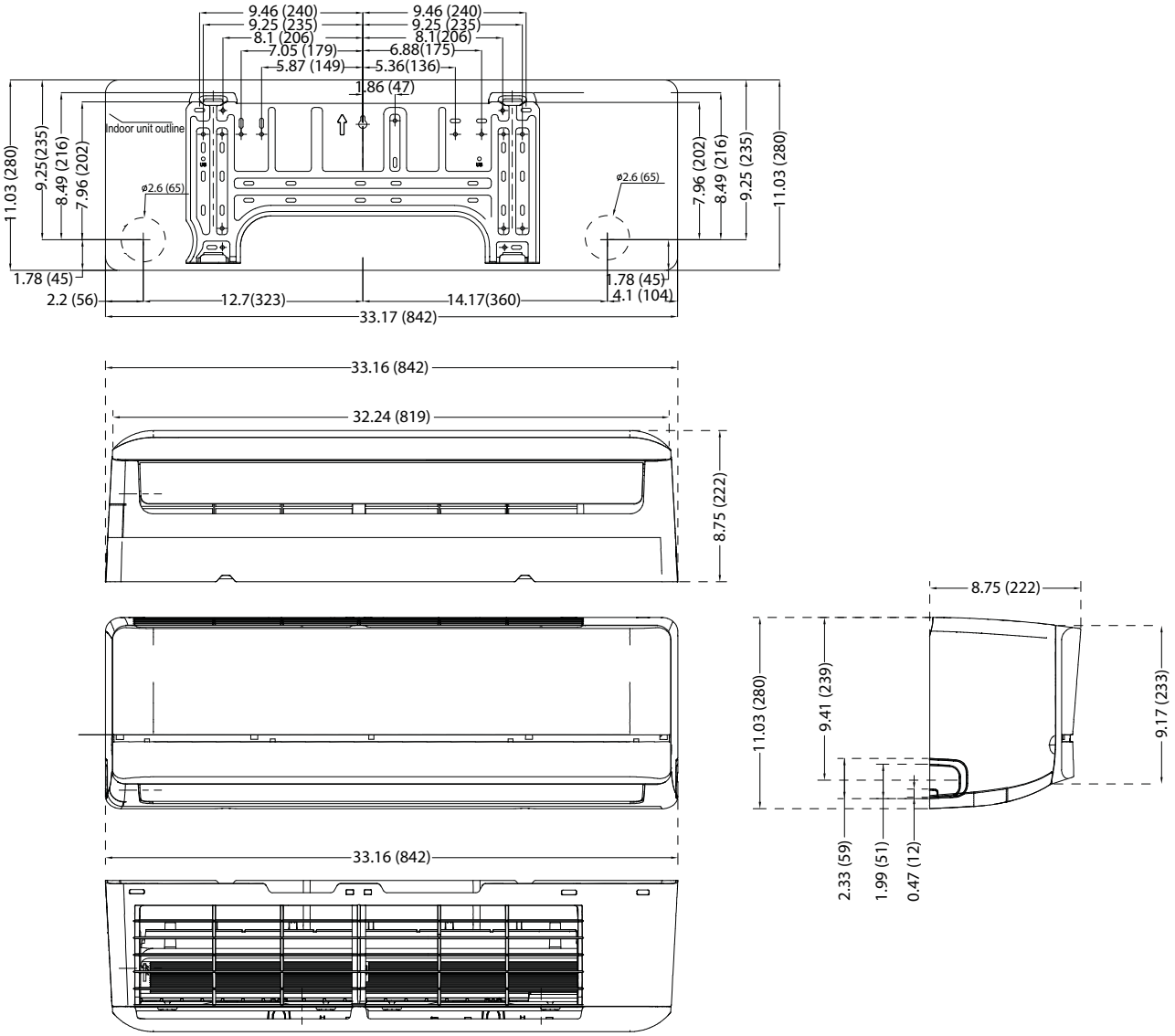

Fig. 5 — Sizes 9K and 12K

DIMENSIONS (CONT)

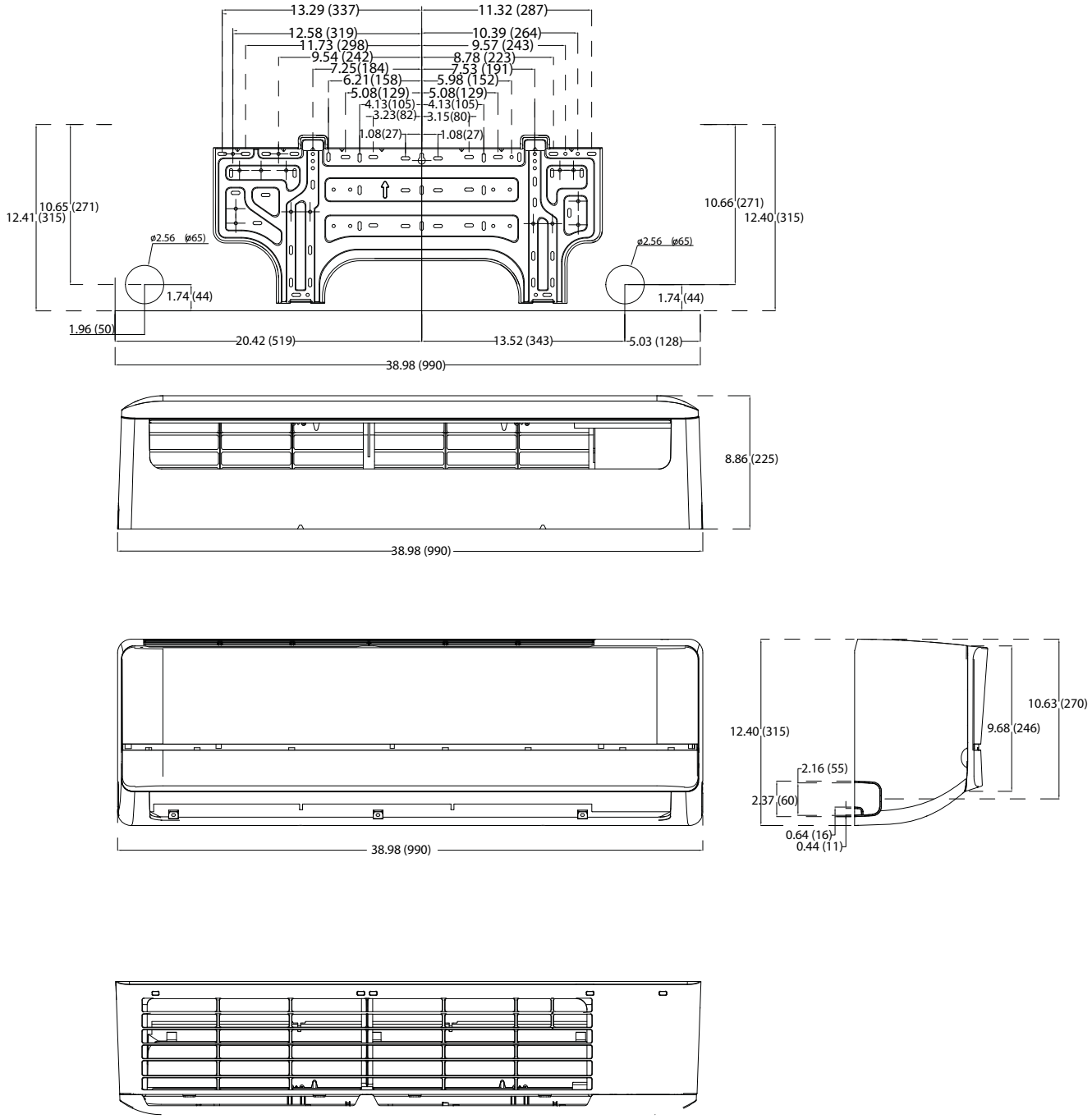

Fig. 6 — Size 18K

DIMENSIONS (CONT)

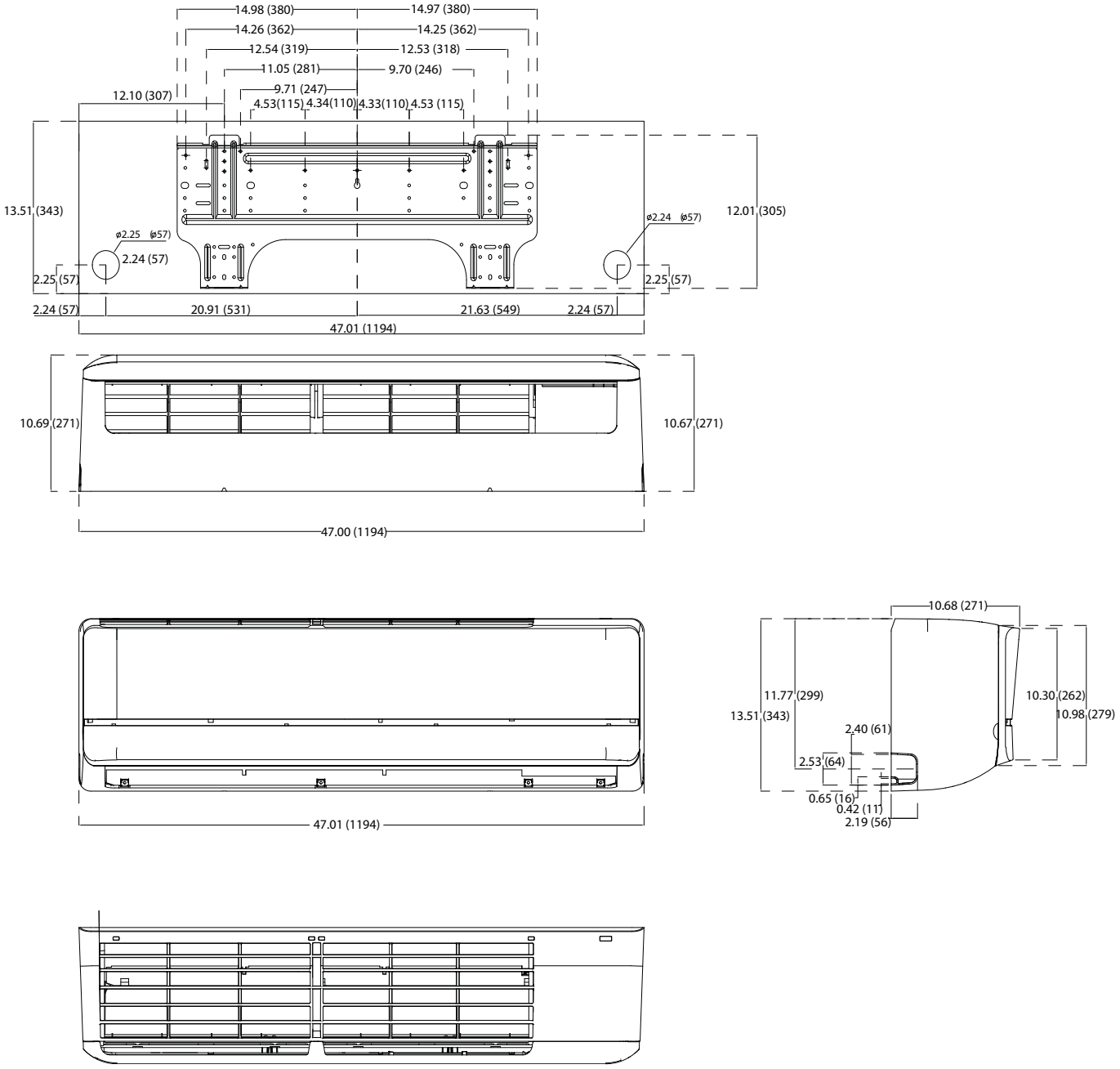

Fig. 7 — Sizes 24K, 30K and 36K

CLEARANCES

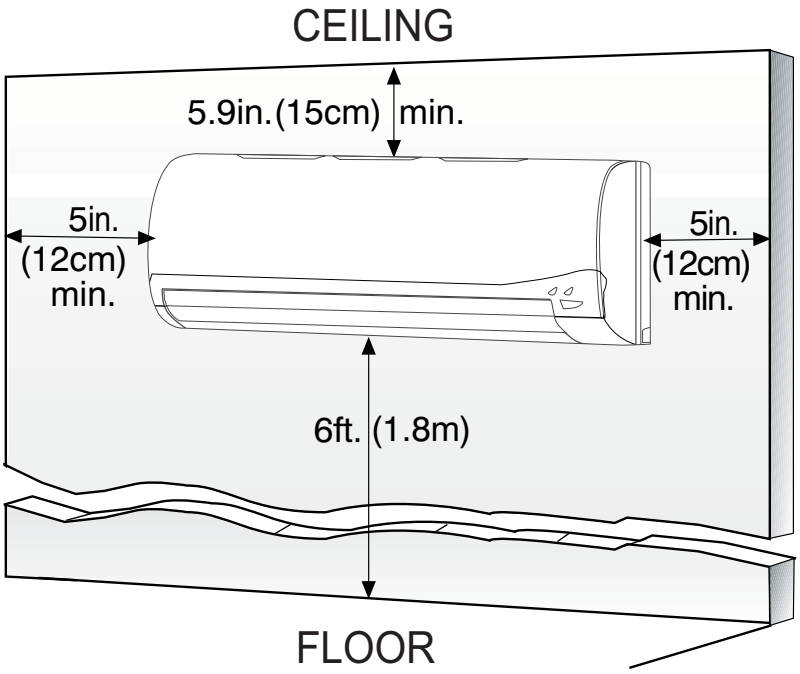

Fig. 8 — Clearances

NOTE: The top clearance recommended for proper return airflow is 5.9in (15cm). Reduction of this clearance may decrease unit performance. This may be reduced to 3.2in (80mm) as long as the right and left clearances are achieved.

INSTALLATION TIPS

Ideal installation locations include:

Indoor Unit

- A location where there are no obstacles near the inlet and outlet area.
- A location which can bear the weight of the indoor unit.
- Do not install the indoor units near a direct source of heat such as direct sunlight or a heating appliance.
- A location which provides appropriate clearances (See Fig. 8 — on page 9.)

INDOOR UNIT INSTALLATION

PRIOR TO INSTALLATION

Before installing the indoor unit, ensure the compatibility with the outdoor unit using the product data as a reference.

Select the Installation Location:

Before installing the indoor unit, choose an appropriate location.

Use the following standards should help you choose an appropriate unit location. Proper installation locations must meet the following standards:

1. Good air circulation
2. Convenient drainage
3. Noise from the unit will not disturb others
4. Firm and solid—the location will not vibrate
5. A site strong enough to support the unit's weight
6. A location at least 3.28 ft. (1m) from all other electrical devices (e.g., TV, radio, computer)
7. **DO NOT** install the unit in the following locations:
   a. Near any source of heat, steam, or combustible gas
   b. Near flammable items such as curtains or clothing
   c. Near any obstacle that might block air circulation
   d. Near the doorway
   e. In a location subject to direct sunlight

NOTE: Wall Holes (if there is no fixed refrigerant piping): While choosing a location, leave ample room for a wall hole. Refer to "DRILL HOLE IN WALL FOR THE INTERCONNECTING PIPING, DRAIN AND WIRING" on page 10 for the connective piping step for the signal cable and the refrigerant piping that connect the indoor and outdoor units. The default position for all piping is the right side of the indoor unit (while facing the unit). However, the unit can accommodate piping to both the left and right sides.

Attach the Mounting Plate to the Wall:

1. Carefully remove the mounting plate, which is attached on the back of the indoor unit.
2. Using the stencil, determine the wall hole position. The mounting plate should be located horizontally and level on the wall. All minimum spacings (See Fig. 8 — on page 9) should be maintained.
3. If the wall is block, brick, concrete or similar material, drill 0.2" (5 mm) diameter holes and insert the anchors for the appropriate mounting screws.
4. Attach the mounting plate to the wall.

Mounting Plate Dimensions

Different model sizes have different mounting plates. Ensure there's enough room to mount the indoor unit (See Fig. 8 — on page 9).

The following measurements can be located on these figures:

- Width of mounting plate
- Height of mounting plate
- Width of indoor unit relative to plate
- Height of indoor unit relative to plate
- Recommended position of wall hole (both to the left and right of mounting plate)
- Relative distances between the screw holes.

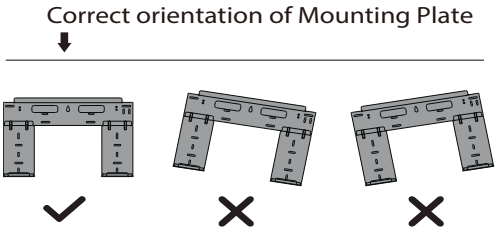

Fig. 9 — Mounting Plate Orientation

DRILL HOLE IN WALL FOR THE INTERCONNECTING PIPING, DRAIN AND WIRING

Refrigerant Line Routing

The refrigerant lines may be routed in any of the four directions shown in Fig. 11.

For maximum serviceability, it is recommended to have refrigerant line flare connections and the drain connections on the outside of the wall that the fan coil will be mounted on.

If piping is going through the back:

1. Determine the pipe hole position using the mounting plate as a template. Drill the pipe hole diameter per the values given in Figures 5, 6, and 7. The outside pipe hole is 1/2-in. (13 mm) min. lower than the inside pipe hole, so it slants slightly downward (see Fig. 10).

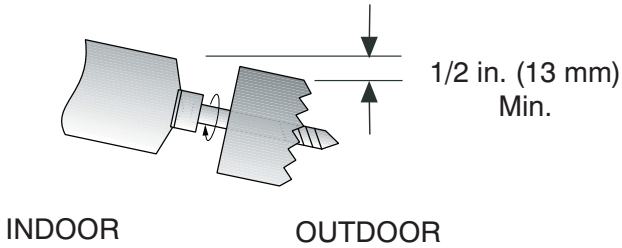

Fig. 10 — Drill Holes

If piping is going through the right or left side:

1. Use a small saw blade to carefully remove the corresponding plastic covering on the side panel and drill the appropriate size hole where the pipe is entering the wall.

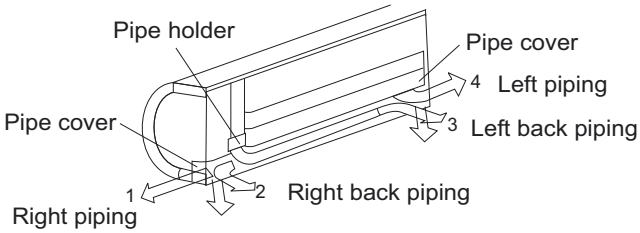

Fig. 11 — Piping Locations

ELECTRICAL DATA

Table 5 — Electrical Data

High Wall Unit Size	Indoor Fan			Max Fuse CB Amp
	V-PH-HZ	FLA	HP	
12K	208/230-1-60	0.33	0.053	Refer to outdoor unit installation instructions – Indoor unit powered by the outdoor unit
9K		0.33	0.053	
12K		0.33	0.053	
18K		0.49	0.067	
24K		0.61	0.16	
30K		0.61	0.16	
36K		0.61	0.16	

LEGEND
FLA-Full Load AMPS

CONNECTION DIAGRAMS

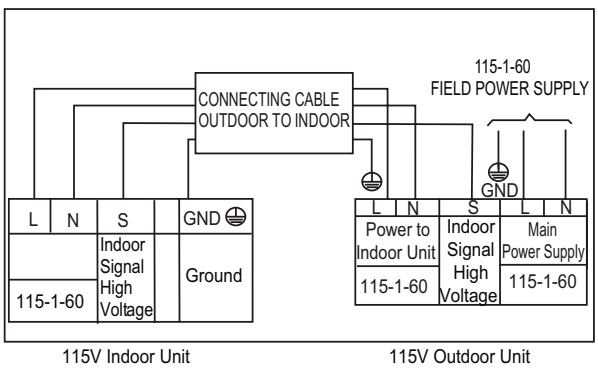

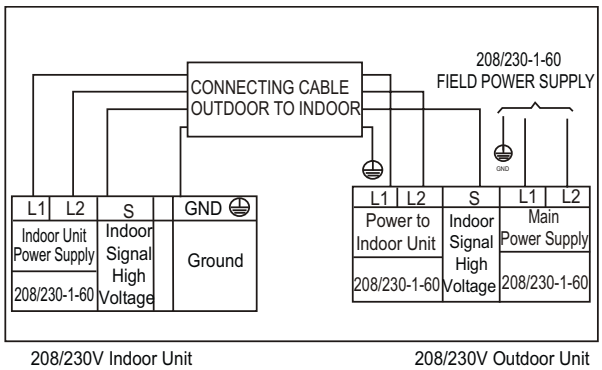

Fig. 12 — Connection Diagrams

Notes:

1. Do not use thermostat wire for any connection between the indoor and outdoor units.
2. All connections between the indoor and outdoor units must reflect the connections in Fig. 12. The connections are sensitive to polarity and will result in a fault code.

TERMINAL BLOCK LOCATION

1. Open the indoor unit's front panel.
2. Use a screwdriver to open the wire box cover on the right side of the unit, then open the terminal block cover. This reveals the terminal block.

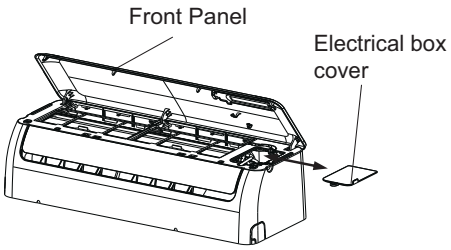

Fig. 13 — Terminal Block Location

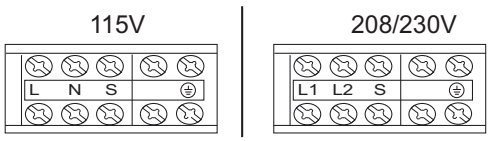

Fig. 14 — Control and Power Wiring on Indoor Unit

INSTALL ALL POWER, INTERCONNECTING WIRING, AND PIPING TO THE INDOOR UNIT

1. Run interconnecting piping and wiring from the outdoor unit to the indoor unit.
2. Run an interconnecting cable through the hole in wall (outside to inside).
3. Lift the indoor unit into position and route piping and drain through the hole in wall (inside to outside). Fit the interconnecting wiring into the back side of the indoor unit.
4. Put an upper claw at the back of the indoor unit on the upper hook of the mounting plate and move the indoor unit from side to side to ensure it is securely hooked. See "Mounting Plate Dimensions" on page 10 and Fig. 9 for reference.
5. Open the indoor unit's front cover and remove the field wiring terminal block cover.
6. Pull the interconnecting wire up from the back of indoor unit and position close to the terminal block on the indoor unit.
7. Push the lower part of the indoor unit up on the wall, then move the indoor unit from side to side, up and down to ensure it is hooked securely (see Fig. 15).

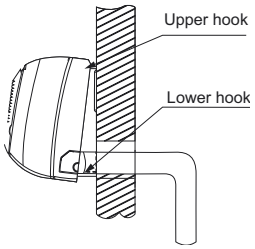

Fig. 15 — Indoor Unit Installation

8. Connect the wiring from the outdoor unit per the connection diagram (see Fig. 12 and Fig. 14).
9. Replace the field wiring cover and close the indoor unit's front cover.
10. Piping:
    a. Cut the pipe, with a pipe cutter, at 90 degrees (see Fig. 16).
    b. Remove the service connection (if provided with the unit).

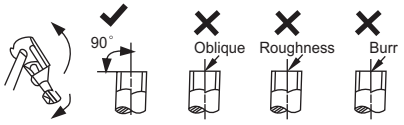

Fig. 16 — Pipe Cutting

    c. Remove all the burrs from the cut cross section of the pipe avoiding any burrs inside the tubes.
    d. Remove the flare nuts attached to the indoor and outdoor units.
    e. Install the correct size flare nut onto the tubing and make the flare connection. Refer to Table 6 for the flare nut spaces.

Table 6 — Flare Nut Spacing

OUTER DIAM. (MM)	A (MM)	
	MAX.	MIN.
Ø 1/4" (6.35)	0.05 (1.3)	0.03 (0.7)
Ø 3/8" (9.52)	0.06 (1.6)	0.04 (1.0)
Ø 1/2" (12.7)	0.07 (1.8)	0.04 (1.0)
Ø 5/8" (15.88)	0.09 (2.2)	0.08 (2.0)

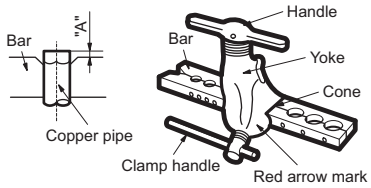

Fig. 17 — Flare Nut Spacing

    f. Apply a small amount of refrigerant oil to the flare connection on the tubing.
    g. Align the center of the pipes and/or service valve.

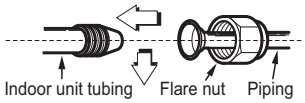

Fig. 18 — Align Pipe Center

    h. Connect both the liquid and gas piping to the indoor unit
    i. Tighten the flare nut using a torque wrench as specified in Table 7.

Table 7 — Tightening Torque

Brass Flare Size	Recommended Seating Torque for Brass Flare Nuts	N-m
Ø1/4	8-10 Ft. - Lbs.	10.8 to 13.6
Ø3/8	15-18 Ft. - Lbs.	20.3 to 24.4
Ø1/2	28-32 Ft. - Lbs.	38.0 to 43.4
Ø5/8	38-42 Ft. - Lbs.	51.5 to 56.9
Ø3/4	50-55 Ft. - Lbs.	68.0 to 74.6

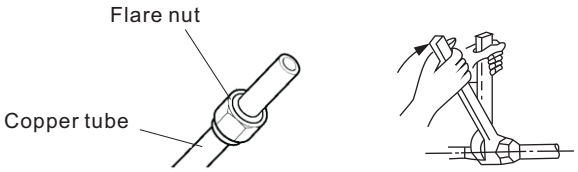

Fig. 19 — Tighten the Flare Nut

FINAL TUBING CHECK

IMPORTANT: Ensure the certain factory tubing on the indoor unit has not shifted during shipment. Ensure the tubes are not rubbing against each other or any sheet metal. Pay close attention to feeder tubes and ensure the wire ties on the feeder tubes are secure and tight.

DRAIN CONNECTIONS

Connect the drain line. The drain line must not have a trap anywhere in its length, must pitch downwards, and must be insulated up to the outside wall (see Fig. 20). By default, the drain hose is attached to the left-hand side of unit (when facing the back of the unit). However, it can also be attached to the right-hand side.

a. To ensure proper drainage, attach the drain hose on the same side that your refrigerant piping exits the unit.
b. Attach a drain hose extension (purchased separately) to the end of the drain hose.
c. Wrap the connection point firmly with Teflon tape to ensure a good seal and to prevent leaks.
d. For the portion of the drain hose that remains indoors, wrap it with foam pipe insulation to prevent condensation.
e. Remove the air filter and pour a small amount of water into the drain pan to ensure that water flows from the unit smoothly.

Plug the Unused Drain Hole

To prevent unwanted leaks, plug the unused drain hole with the rubber plug provided.

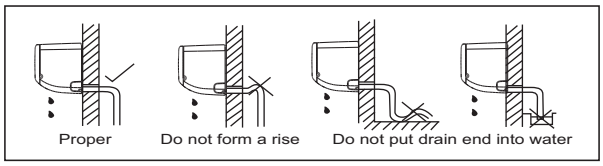

Fig. 20 — Proper Drain Hose Installation

NOTE: For proper orientation of the refrigerant piping, electrical cable and drain lines, refer to Fig. 21.

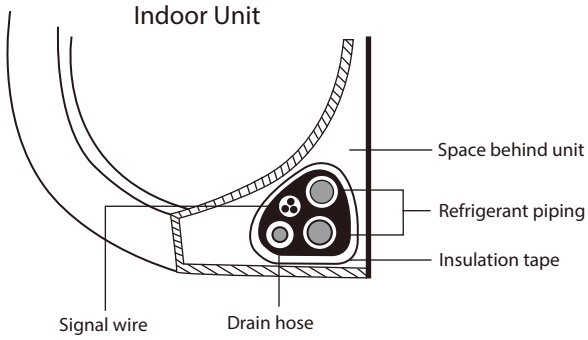

Fig. 21 — Bundle drain hose, refrigerant pipes, and signal cable

NOTE: The factory insulation provided with the product is sufficient, therefore adding additional insulation to the refrigerant pipes is NOT recommended. Additional insulation may keep the product from attaching flush to the wall.

NOTE: For applications where gravity cannot be used for drainage, a condensate pump accessory is available. Consult the condensate pump Installation Instructions for more information.

WIRELESS REMOTE CONTROL INSTALLATION

Mounting Bracket (if installed on the wall)

1. Use the two screws supplied with the wireless remote control to attach the mounting bracket to the wall in a location selected by the customer and within operating range.
2. Install the batteries in the remote control.
3. Place the remote control into the remote control mounting bracket.

NOTE: For remote control operation, refer to the unit Owner's Manual.

WIRED REMOTE CONTROL INSTALLATION

To connect the wired remote controller KSACN0101AAA (Timer Function) to the indoor units, connect to the 4-pin connector located on the display board.

To connect the wired remote controller KSACN0401AAA (7 Day Programmable) to the indoor units:

1. Replace the display board with the shipped with the kit.
2. Install the adapter board (shipped with the kit).
3. Connect the adapter board to the new display board. Follow the instructions on the wired controller KSACN0401AAA installation instructions manual for more details.
4. Connect the female molex plug on the adapter board to the male molex plug from the extension cable shipped with the kit.
5. Connect the extension cable to the wired controller

For setup instructions, refer to the controller installation manual.

START-UP

Test Operation

Perform a test operation after completing a gas leak and electrical safety check (see Fig. 22).

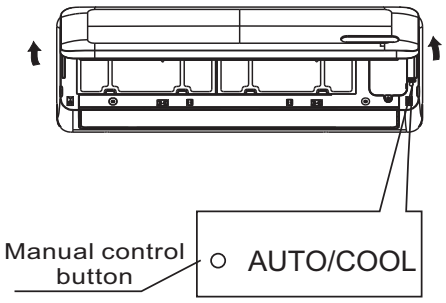

Fig. 22 — Test Operation

1. Push **ON/OFF** on the remote control to begin testing.

NOTE: A protection feature prevents the air conditioner from activating for approximately 3 to 4 minutes.

2. Push **MODE**, select **COOLING**, **HEATING**, **FAN** mode to check that all functions work correctly.
3. To run the test using the **MANUAL** button on the indoor unit:
   a. Open the front panel of the indoor unit;
   b. Push **MANUAL** once to energize the unit. The set conditions for manual operation are as follows:
   •Preset set point: 76°F (24°C)
   •Fan speed: **AUTO**
   •Discharge air direction: Pre-set position based on operation in the **COOL** or **HEAT** mode.
4. Be sure to set the **MANUAL** button to **OFF** (by pushing it twice again) after completing the test operation.

SYSTEM CHECKS

1. Conceal the tubing where possible.
2. Ensure the drain tube slopes downward along its entire length.
3. Ensure all tubing and connections are properly insulated.
4. Fasten tubes to the outside wall, when possible.
5. Seal the hole through which the cables and tubing pass.

INDOOR UNIT

1. Do all remote control buttons function properly?
2. Do the display panel lights work properly?
3. Does the air deflection louver function properly?
4. Does the drain work?

Explain Following Items To Customer (with the aid of the Owner's Manual):

1. How to turn the air conditioner on and off; selecting **COOLING**, **HEATING** and other operating modes; setting a desired temperature; setting the timer to automatically start and stop the air conditioner operation; and all other features of the remote control and display panel.
2. How to remove and clean the air filter.
3. How to set the air deflection louver.
4. Explain care and maintenance.
5. Present the owner's manual and installation instructions to customer.

TROUBLESHOOTING

For ease of service, the systems are equipped with diagnostic code display LEDs on both the indoor and outdoor units. The indoor diagnostic display is a combination of flashing LEDs on the display panel or the front of the unit.

Some indoor units display error codes specifying failure modes in the outdoor units. If possible, always check the diagnostic codes displayed on the indoor unit first.
The diagnostic codes displayed in the indoor and outdoor units are listed in Table 8.

INDOOR UNIT DIAGNOSTIC GUIDES

Table 8 — ID Units Error Code Display

OPERATION LAMP	TIMER LAMP	DISPLAY	LED STATUS
☆ 1 time	X	E0	Indoor unit EEPROM parameter error
☆ 2 times	X	E1	Indoor / outdoor units communication error
☆ 3 times	X	E2	Zero-crossing signal detection error
☆ 4 times	X	E3	Indoor fan speed is out of control
☆ 5 times	X	E4	Indoor room temperature sensor T1 open circuit or short circuit
☆ 6 times	X	E5	Evaporator coil temperature sensor T2 open circuit or short circuit
☆ 7 times	X	EC	Refrigerant leakage detection
☆1 time	O	F0	Overload current protection
☆ 2 times	O	F1	Outdoor ambient temperature sensor T4 open circuit or short circuit
☆ 3 times	O	F2/Fb	Condenser coil temperature sensor T3/T2B (Multi-zone only) open circuit or short circuit
☆ 4 times	O	F3	Compressor discharge temperature sensor T5 open circuit or short circuit
☆ 5 times	O	F4	Outdoor unit EEPROM parameter error
☆ 6 times	O	F5	Outdoor fan speed is out of control
☆ 1 time	☆	P0	IPM malfunction or IGBT over-strong current protection
☆ 2 times	☆	P1	Over voltage or over low voltage protection
☆ 3 times	☆	P2	High temperature protection of the compressor top diagnosis and solution (only for 9k,12k models)
☆ 5 times	☆	P4	Inverter compressor drive error

O (on – light) X (off – light) ☆ (flash)

For additional diagnostic information, refer to the service manual.

©2019 Bryant Heating & Cooling Systems •3300 Riverwood Parkway Atlanta GA, 30339 Edition Date: 07/19

Manufacturer reserves the right to discontinue, or change at any time, specifications or designs without notice and without incurring obligations.