KSAIC0401230

Installation Instructions

24V Interface Kit for Ductless Systems

Read and become familiar with these instructions before beginning installation.

SAFETY CONSIDERATIONS

Read these instructions thoroughly and follow all warnings or cautions included in the literature and attached to the unit. Consult local building codes and National Electrical Code (NEC) for special requirements. Recognize safety information.

This is the safety-alert symbol ⚠. When you see this symbol on the unit and in instructions or manuals, be alert to the potential for personal injury. Understand these signal words: **DANGER**, **WARNING**, and **CAUTION**. These words are used with the safety-alert symbol. **DANGER** identifies the most serious hazards which will result in severe personal injury or death. **WARNING** signifies hazards which could result in personal injury or death. **CAUTION** is used to identify unsafe practices which may result in minor personal injury or product and property damage. **NOTE** is used to highlight suggestions which will result in enhanced installation, reliability, or operation.

⚠ WARNING

ELECTRICAL SHOCK HAZARD

Failure to follow this warning could result in personal injury or death. Before beginning any modification or installation of this kit, be sure the main electrical disconnect is in the **OFF** position.

Ensure power is disconnected to the fan coil unit. On some systems both the fan coil and the outdoor unit may be on the same disconnect. Tag the disconnect switch with a suitable warning label. There may be more than one disconnect.

⚠ CAUTION

EQUIPMENT DAMAGE HAZARD

Failure to follow this warning may result in equipment damage.

Do not install the wired controller in an area subjected to excessive steam, oil or sulfide gas. Doing so may cause the controller to deform and/or fail.

⚠ CAUTION

INSTALLATION

Entrust the distributor or authorized professionals to install the unit. Installation by unskilled persons may lead to improper installation, electric shock, or fire. Re-installation must be performed by authorized professionals. Non-compliance may lead to electric shock or fire.

TABLE OF CONTENTS

PAGE

SAFETY CONSIDERATIONS....1
OVERVIEW....1
DIMENSIONS....2
CLEARANCES....2
INSTALLATION....3
SYSTEM CONFIGURATION SCENARIOS....3
DIP SWITCHES CONFIGURATION....8
WIRING DIAGRAM....10

OVERVIEW

The 24V INTERFACE KIT is used to connect:
A Single or Multi-zone Ductless System to a 3rd party single stage conventional thermostat.

For other applications, consult your Ductless representative.

Fig. 1 —24V Interface

NOTES: Images are for illustration purposes only. Actual models may be slightly different.

Table 1 —Kit Contents: Confirm the following parts are included

No.	Description	Qty	Remarks
1	Control box	1	N/A
2	Installation Manual	1	N/A
3	Screws	3	M4X20 (for wall mounting)
4	Wall Anchors	3	For wall mounting
7	Return Air Thermistor Assembly	1	Used on future applications
8	16ft. (5m) Return Air Thermistor Assembly Extension Wires	1	Used on future applications

Table 2 — Field Supplied Components: Prepare the following assemblies on site

No.	Description	Qty	Type	Remarks
1	Switch Box	1	N/A	N/A
2	Wiring Tube (insulating sleeve and tightening screw)	1	N/A	N/A

⚠ WARNING

The wiring should adapt to the wire control current.
Otherwise, electric leakage or overheating may occur and result in a fire.
The specified cables shall be used in the wiring. No external force may be applied to the terminal. Otherwise, the wire may be damaged and heating may occur and result in a fire.

⚠ CAUTION

The shielded wire must be grounded. Sensor connecting cable should not be longer than 23in. (7m). The control box operates on low voltage circuit loops. DO NOT connect a 220V or 380V cable to the circuit loop.
Ensure the configured tubes are 12-20in. (30-50cm) or more apart.
DO NOT use a ohmmeter to detect the insulation after wiring the control box.

DIMENSIONS

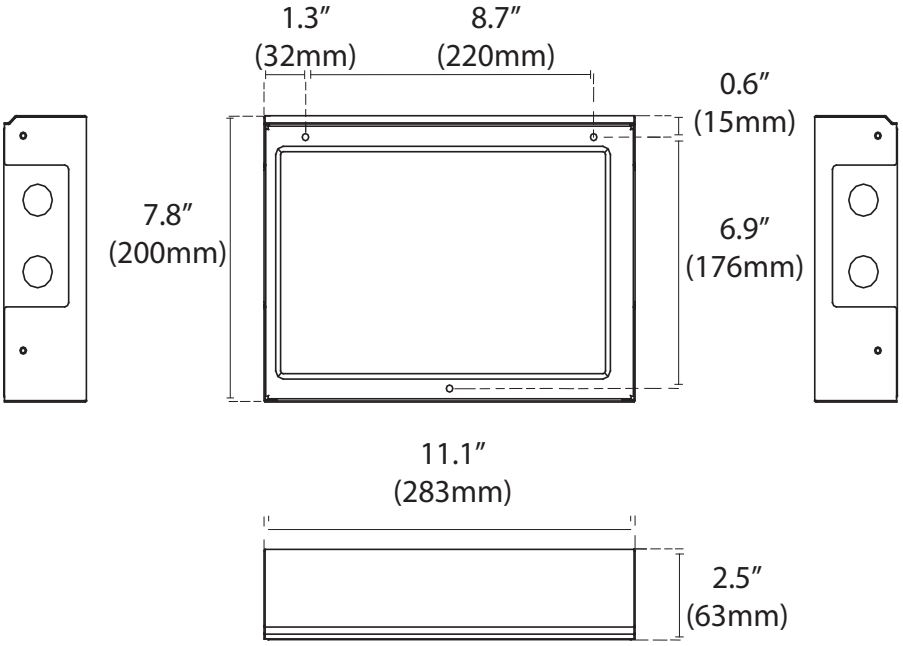

Fig. 2 —24V Interface Structure Dimensions

CLEARANCES

Table 3 — 24V Interface Clearance Dimensions

Clearances	
Unit	Minimum Value In (mm)
Sides	5.9 (150)
Front	24 (610)*
Top and Bottom	3 (76.2)

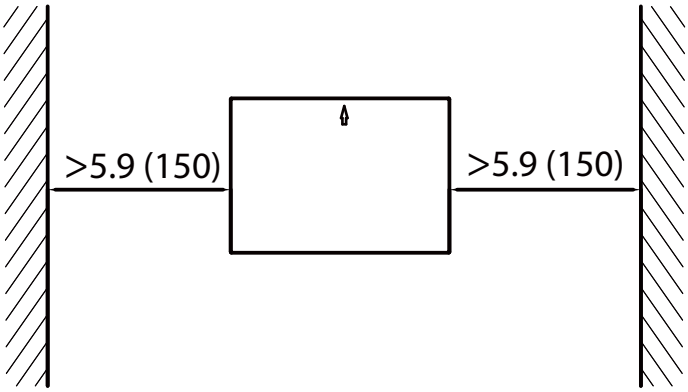

Fig. 3 —Clearances

INSTALLATION

Installation Location

The 24V INTERFACE KIT is rated for outdoor and indoor mounting (depending on the application). It is recommended to install as close as possible to the indoor unit and thermostat.

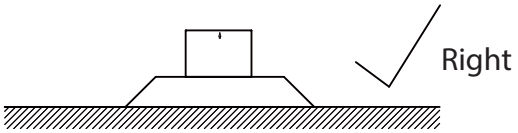

Fig. 4 —Installation (Right way)

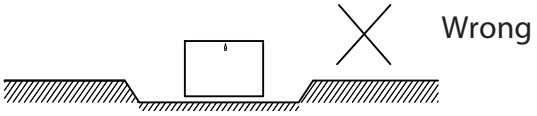

Fig. 5 —Installation (Wrong way)

CAUTION

DO NOT install the 24V INTERFACE KIT near flammable liquids or gases such as gasoline or hydrogen sulfide. Doing so creates a fire hazard.

1. Remove the cover of the **24V INTERFACE KIT.** Remove the six screws of the **24V INTERFACE KIT** with a screwdriver or similar tool. Rotate the lid along the hem to disassemble.

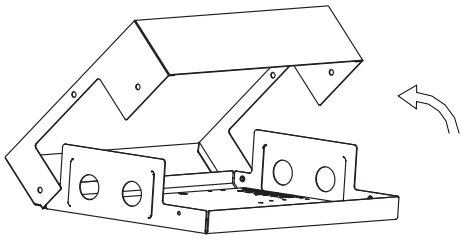

Fig. 6 —Remove the cover

2. Mount the **24V INTERFACE KIT** horizontally (see Fig. 7), by fastening the back plate to the wall with 3 screws\ (M4x20) and anchors.

CAUTION

The 24V Interface kit cover has a directional arrow on the cover. In case of outdoors installation verify, during the mounting process, that this arrow will point **UP** upon installation. Failure to mount the kit correctly can cause water ingress into the box which may compromise the electrical component integrity.

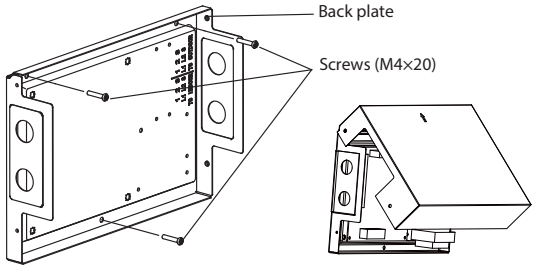

Fig. 7 —24V Interface Kit

NOTE: Place the unit on a flat surface. Be careful not to distort the back plate of the 24V INTERFACE KIT by over tightening the screws.

3. **WIRING** - Based on the system used, wire the unit as shown in the *System Configuration Scenarios* section.
4. Cover the **24V INTERFACE KIT** lid, and lock back in place using the six screws previously removed.

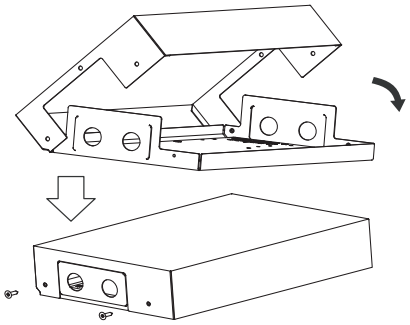

Fig. 8 —Cover the screw

System Configuration

NOTES:

- **Thermostat should be configured for use with a conventional system.**
- **The wireless remote controller, wired controller and Wi-Fi can not be used with this 24V interface Kit at the same time. Only the Swing and LED function can be used.**

Table 4 — Connection Wiring Specification

Connection Wiring	Outdoor L1, L2, S & S1, S2	Indoor L1, L2, S & S1, S2	R,C	Y/W/G/G1/ G2/G3/Dry
Size	Refer to the outdoor connecting wires size	Refer to the indoor connecting wires size	18AWG (minimum)	18AWG (minimum)

SYSTEM CONFIGURATION SCENARIOS

Follow the configuration scenarios for the right connections depending on the system:

Scenario 1: Single Zone Ductless System with DLCPRA, DLCERA
Scenario 2: Single Zone Ductless System with DLCLRA
Scenario 3: Multi-zone Ductless System with DLCMRA

Scenario No. 1:

Single Zone Outdoor units DLCPRA, DLCERA with approved Ductless indoor units High Walls, Cassettes, Ducted and Consoles (for proper combinations consult the compatibility chart).

- High Wall (sizes 9-24)[208-230V]
- Cassette (sizes 9-24)
- Ducted (sizes 9-24) (*refer to NOTE)
- Console (sizes 18-24)

Installation Steps:

1. Run the interconnecting piping from the indoor to the outdoor unit using the indoor piping size.
2. Run the interconnecting wiring from the outdoor unit to the 24V interface using terminal connections L1, L2 and S.
3. Run the interconnecting wiring from the 24V interface to the indoor unit using terminal connections L1, L2 and S.
4. Run the thermostat wiring from the thermostat to the 24V interface using connections R and C on CN15 and Y, W, G on CN19.
5. Configure the dip switches on the 24V interface accordingly.

NOTES:

Follow the Indoor and Outdoor unit's general installation instructions.

***For the Ducted units, in order to initially setup the static pressure, the 24V interface must be bridged. Temporarily connect together the Communication wires L1, L2 and S from indoor to outdoor unit until static pressure settings are complete (see ducted unit Installation Manual). When static pressure is adjusted , reconnect L1, L2 and S wires to the terminal blocks.**

On selected indoor units, the Up-Down Swing Louver function as well as the control to turn off the indoor unit display (LED) is available on the unit's Wireless Remote controller. The Wi-Fi accessory and Wired Remote controller is not functional when using the 24V interface.

For 115V Ductless applications the 24V transformer has to be replaced in the field. This is available through Fast Parts part number 11203103000393.

CAUTION

The indoor unit requires an updated control board for compatibility with the 24V interface.

Refer to the Compatibility charts on hvacpartners.com for proper matches and serial number compatibility.

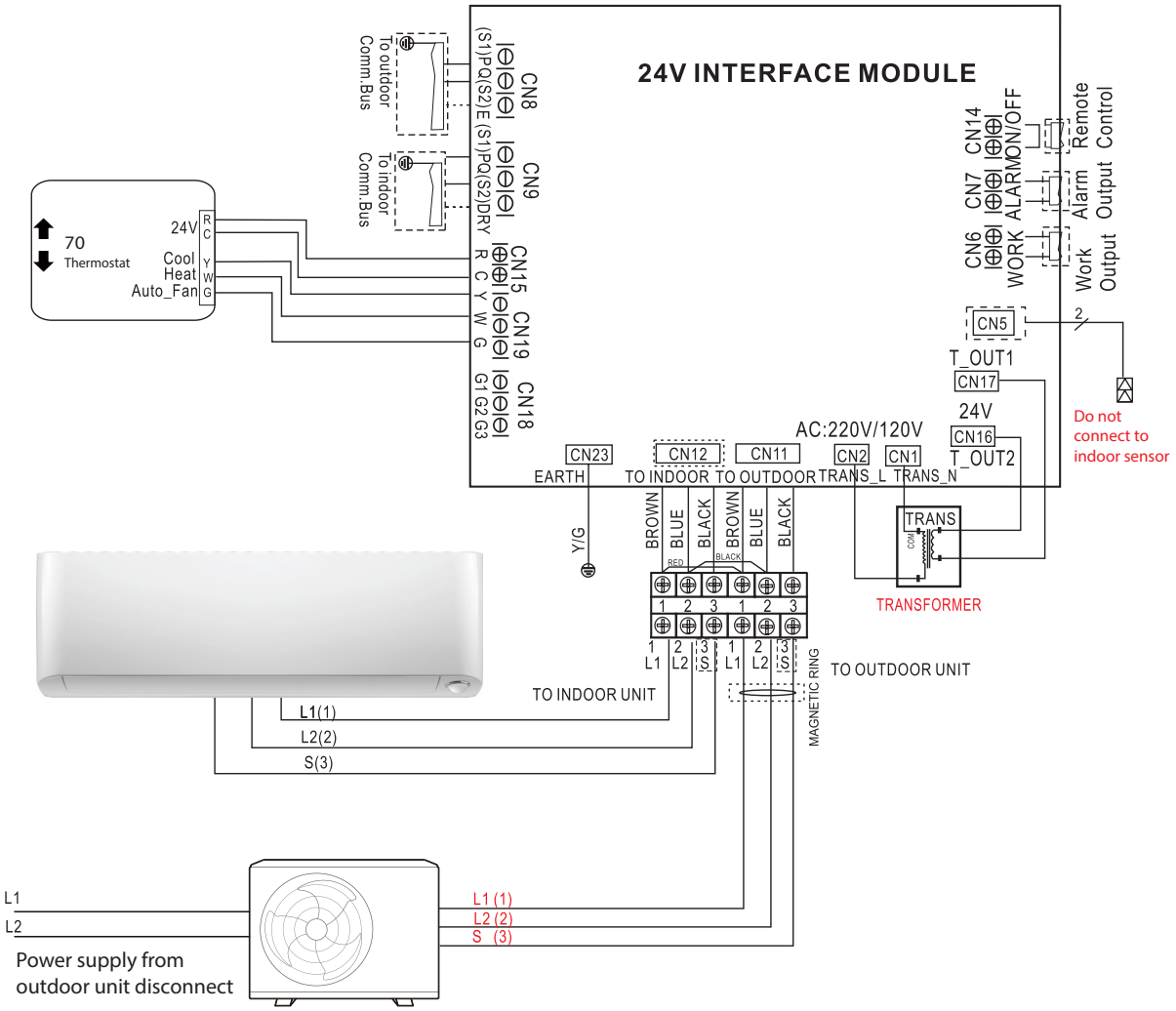

Fig. 9 —Wiring Diagram

Scenario No. 2:

Single Zone Outdoor units DLCLRA with approved Ductless indoor units Cassettes, Ducted and Consoles (for proper combinations consult the compatibility chart).

- Cassette (sizes 36-48)
- Ducted (sizes 36-48) (*refer to NOTE)
- Console (sizes 36-48)

Installation Steps:

1. Run the interconnecting piping from the indoor to the outdoor using the indoor piping size.
2. Run the interconnecting wiring from the outdoor unit to the 24V interface using terminal connections L1, L2 and on CN8 connect S1 and S2.
3. Run the interconnecting wiring from the 24V interface to the indoor unit using terminal connections L1, L2 and on CN9 connect S1 and S2.
4. Run the thermostat wiring from the thermostat to the 24V interface using connections R and C on CN15 and Y, W, G on CN19.
5. Configure the dip switches on the 24V interface accordingly.

NOTES:

Follow the Indoor and Outdoor unit's general installation instructions.

***For Ducted units, in order to initially setup the static pressure, the 24V interface must be bridged. Temporarily connect together the Communication wires S1 and S2 from indoor to outdoor unit until static pressure settings are complete (see ducted unit Installation Manual). When static pressure is adjusted, connect S1 and S2 to CN8 and CN9 (see Fig. 14).**

On selected indoor units, the Up-Down Swing Louver function as well as the control to turn off the indoor unit display is available on the unit's Wireless Remote controller. The Wi-Fi accessory and Wired Remote controller is not functional when using the 24V interface.

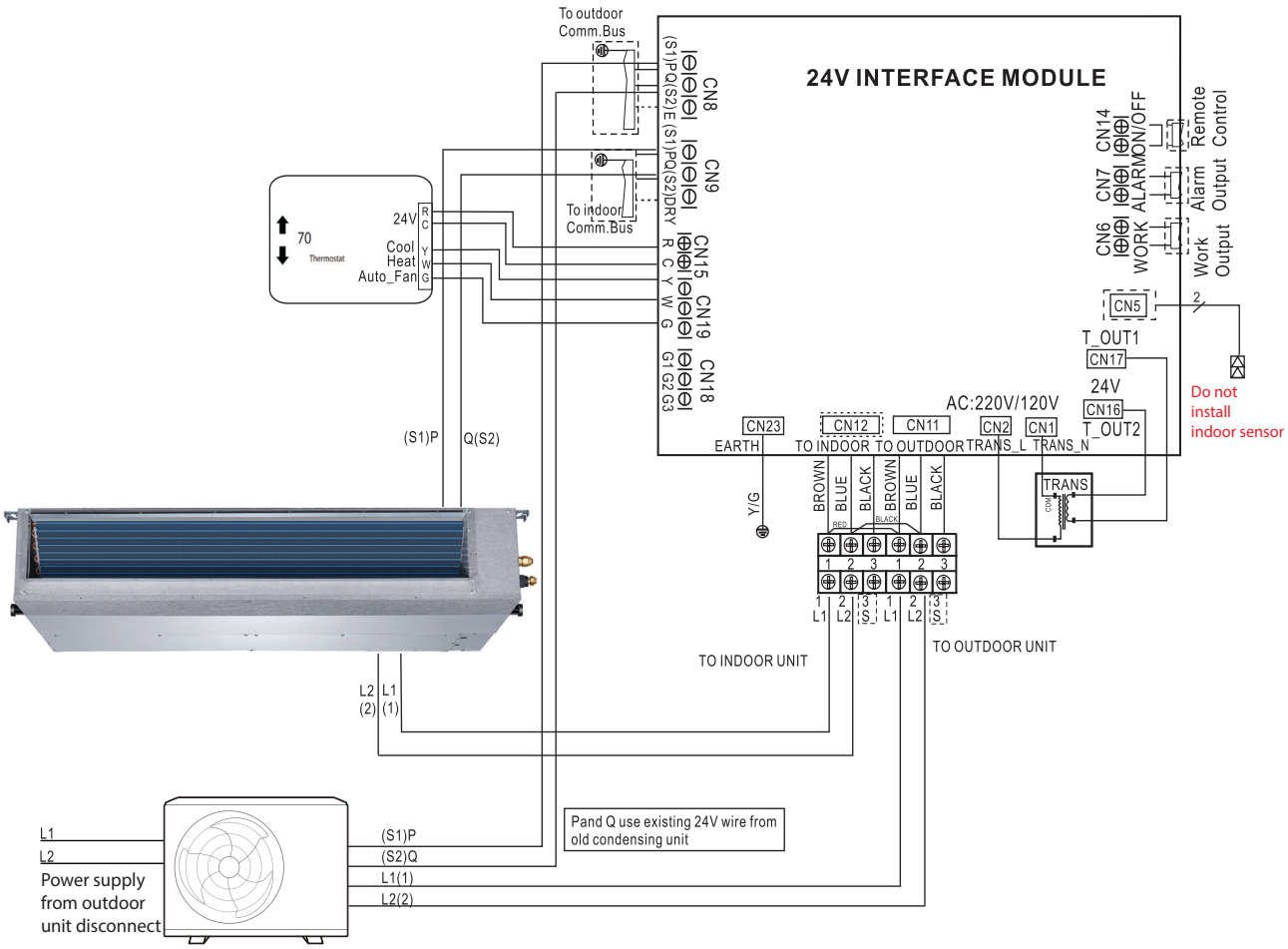

Fig. 10 —Wiring Diagram

Scenario No. 3:

Multi-zone Outdoor units DLCMRA with approved Ductless indoor units High Walls, Cassettes, Ducted and Consoles. (For the proper combinations, consult the compatibility chart).

- High Wall (Sizes 9-24)
- Cassette (Sizes 9-24)
- Ducted (Sizes 9-24) (*refer to NOTE)
- Console (Sizes 9-24)

Installation Steps:

1. Run interconnecting piping from Indoor to Outdoor using Indoor piping size.
2. Run interconnecting wiring from outdoor unit to 24V interface using terminal connections L1, L2 and S.
3. Run interconnecting wiring from 24V interface to indoor unit using terminal connections L1, L2 and S.
4. Run thermostat wiring from thermostat to 24V interface using connection R and C on CN15 and Y, W, G on CN19.
5. Configure the dip switches on the 24V interface accordingly.

NOTES:

One 24V interface and one thermostat is required per indoor unit head. Follow the Indoor and Outdoor unit's general installation instructions.

***For Ducted units, in order to initially setup the static pressure, the 24V interface must be bridged. Temporarily connect together the Communication wires L1, L2 and S from indoor to outdoor unit until static pressure settings are complete (see ducted unit Installation Manual). When static pressure is adjusted, reconnect L1, L2 and S wires to the terminal blocks.**

In the AUTO mode, the system automatically cools or heats the room according to the user-selected set point. mode, the system automatically cools or heats the room according to the user-selected set point.

AUTO mode is recommended for use on Single Zone applications only. Using AUTO changeover on multi-zone applications could set an indoor unit to STANDBY mode, indicated with two dashes (--) on the display, which will turn off the indoor unit until all the indoor units are in the same mode (COOLING or HEATING). HEATING is the system's priority mode. Simultaneous HEATING and COOLING is not allowed.

On selected indoor units, the Up-Down Swing Louver function as well as the control to turn off the indoor unit display, is available on the unit's wireless remote control. The Wi-Fi accessory and wired remote control is not functional when using the 24V interface.

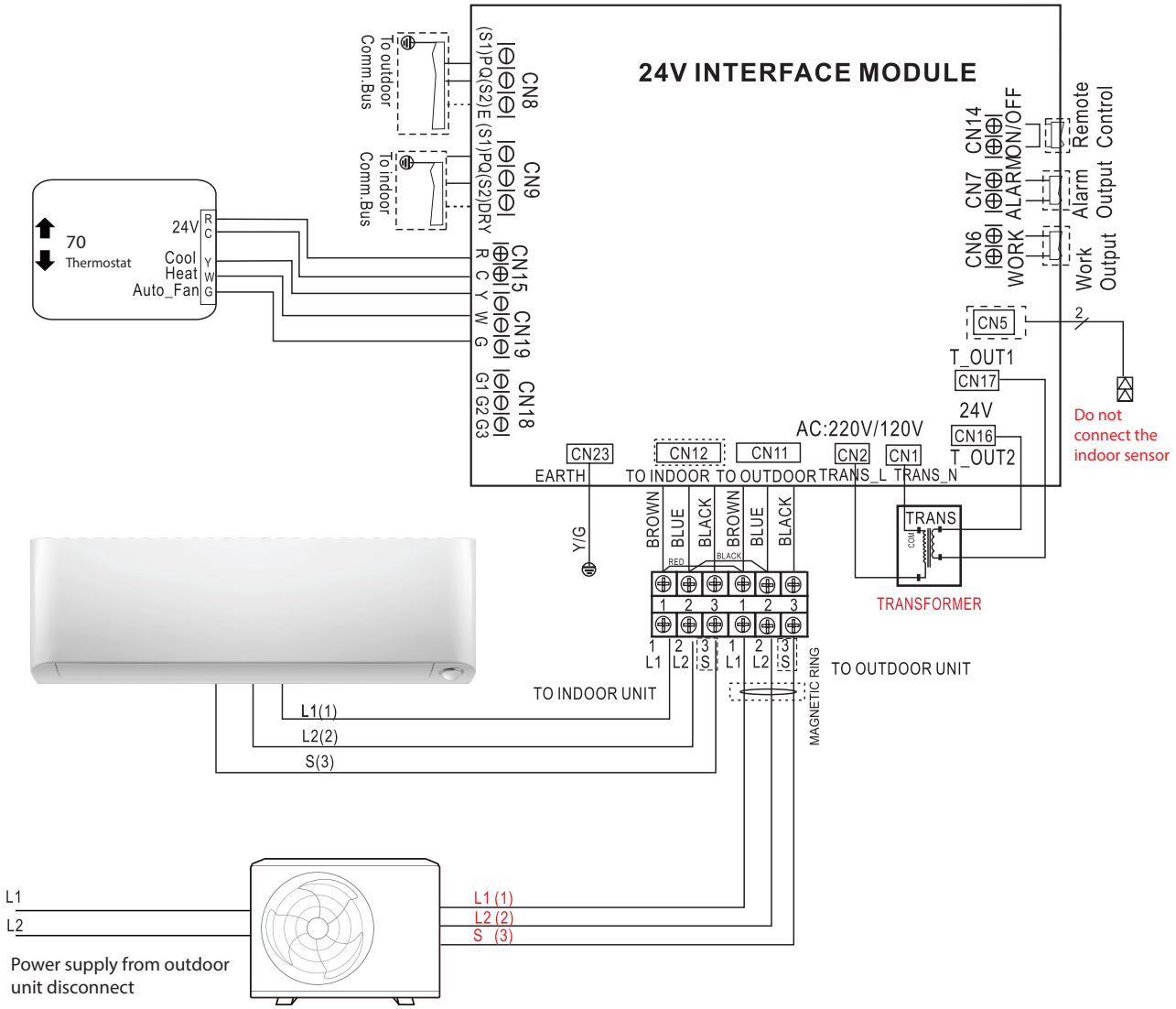

Fig. 11 —Wiring Diagram

⚠ CAUTION

The conventional thermostat must be configured for use with a single stage air conditioner (Y output **ONLY**) and a single stage heating (W) system.

Control Logic

Table 5 — Conventional Thermostat Connections

Connector	Purpose
R/C	24VAC Output
Y	Cooling
W	Heating
G	Fan
AUX/DRY	Aux/Dry Mode

Table 6 — Mode Setting

Y	W	G	Aux/Dry	Setting Mode
√	X	☆	☆	Cooling
X	√	☆	X	Heating
X	X	√	X	Fan only
√	√	☆	☆	OFF
X	X	X	X	OFF
X	X	☆	√	DRY Mode (on Ductless Systems)

FAN SPEED - Select Auto, Medium or High Airflow

For Ductless Systems (Scenarios 1-3) the Fan Speed is default as AUTO.

Table 7 — Fan Speed Setting

Unit ON/OFF	G	Setting Fan Speed
√	X	Auto Fan Speed
√	√	Auto Fan Speed
X	X	Fan OFF

LEGEND

√	**ON**
X	**OFF**
☆	**ON or OFF**

DIP SWITCHES CONFIGURATION

The **24V INTERFACE KIT** must be configured to operate properly with the system components with which it is installed. To successfully configure the system, move the Dip Switches to match the components and functions used.

NOTE: Properly identify the DIP Switch number marked on the board of the 24V interface as SW1 through SW4 before selecting the options. On each DIP Switch block the numbers 1 and 2 would be marked.

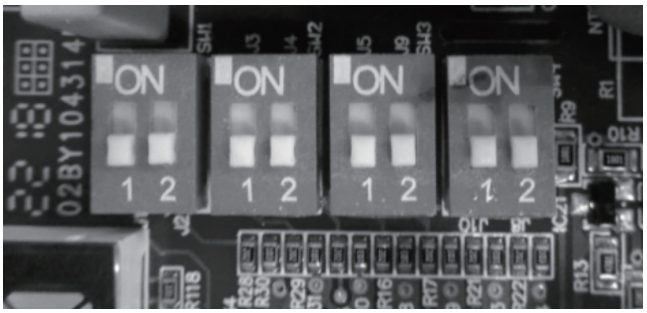

Fig. 12 —DIP Switch Definitions

DIP Switch 1-1

Used to turn ON or OFF the diagnostic code display LED on the control board of the 24V Interface (see Fig. 13).

Table 8 — DIP Switch 1-1

SW1-1	Result	Note
ON	Display on	
OFF	Display off	Default

Fig. 13 —LED

DIP Switch 1-2

Used for selection of the indoor unit type.

Table 9 — DIP Switch 1-2

SW1-2	Result	Note
ON	Sets - Both Ductless Indoor and Outdoor Units (For Scenarios 1-3)	
OFF	Used on future applications	Default

DIP Switch 2-1

Used for selection of the system: **Cooling Only** or **Heat Pump.**

Table 10 — DIP Switch 2-1

SW2-1	Result	Note
ON	Cooling Only	
OFF	Heat Pump	Default

DIP Switch 2-2

Used for freeze protection of the indoor coil.

Table 11 — DIP Switch 2-2

SW2-2	Result	Note
ON	Fan does not stop	
OFF	Fan stops if the indoor coil temperature is low	Default

NOTE: Applicable only to Ductless Style Indoor Heat Pump units in Heating Mode.

DIP Switch 3-1

On Ductless Systems, Dry is used with thermostats with a Dry Function output.

Table 12 — DIP Switch 3-1

SW3-1	Result	Note
ON	Dry Mode	
OFF	Used on future applications	Default

DIP Switch 3-2

Used to increase the compressor frequency in case the set point has not been reached after 1 hour or 3 hours of operation.

Table 13 — DIP Switch 3-2

SW3-2	Result	Note
ON	1h	
OFF	3h	Default

DIP Switch 4-1

Not required. Used on future applications. Select the fan only mode of indoor unit.

Table 14 — DIP Switch 4-1

SW4-1	Result	Note
ON	The SW4-2 is available under fan only mode	
OFF	The SW1-2 is available	Default

DIP Switch 4-2

Not required. Used on future applications. Select the fan speed of indoor unit (when selecting DIP switch 4-1).

Table 15 — DIP Switch 4-2

SW4-2	Result	Note
ON	Medium fan speed	
OFF	High fan speed	Default

NOTE: If the SW4-1 is ON, the SW4-2 takes effect, otherwise the SW1-2 takes effect.

ERROR CODES

For ease of service, the 24V interface is equipped with a diagnostic code display LED on the control board (please make sure the 24V interface is installed with the directional arrow pointing up to successfully read the error code). Refer to the Indoor or outdoor unit's service manual, as listed in Table 16 for a troubleshooting breakdown.

Table 16 — Error Codes

Display	Malfunction and Protection Indication	Service Manual Reference
E0	Indoor EEPROM error	Indoor Service Manual
E2	Cross-zero detection error	Indoor or Outdoor Service Manual
E3	Indoor fan speed malfunction	Indoor Service Manual
E4	Indoor room temperature sensor error	Indoor Service Manual
E5	Evaporator coil temperature sensor error	Indoor Service Manual
EC	Refrigerant leak detection system malfunction	Indoor or Outdoor Service Manual
F0	Current overload protection	Outdoor Service Manual
F1	Outdoor ambient temperature sensor (T4) malfunction	Outdoor Service Manual
F2	Condenser coil temperature sensor (T3) malfunction	Outdoor Service Manual
F3	Condenser coil temperature sensor (T5) malfunction	Outdoor Service Manual
F4	Outdoor unit EEPROM parameter error	Outdoor Service Manual
F5	Outdoor fan speed has been out of control	Outdoor Service Manual
F6	T2b sensor error	Indoor or Outdoor Service Manual
P0	Inverter module (IPM) malfunction	Outdoor Service Manual
P1	Over-voltage or under-voltage protection	Outdoor Service Manual
P2	Compressor top high temperature protection (OLP)	Outdoor Service Manual
P3	Low ambient temperature cut off in heating	Outdoor Service Manual
P4	Compressor drive malfunction	Outdoor Service Manual
--	Mode conflict	Indoor Service Manual
P6	Compressor low-pressure protection	Outdoor Service Manual
IN	24V interface and indoor unit communication malfunction	Indoor Service Manual
OU	24V interface and outdoor unit communication malfunction	Outdoor Service Manual
00	24V interface successful power up and in standby	Operational Code
01	System operating in cooling mode	Operational Code
02	System operating in heating mode	Operational Code
03	System operating in fan mode	Operational Code
04	System operating in dehumidify mode	Operational Code
05	System operating with Auxiliary heater active (not a recommended application)	Operational Code

WIRING DIAGRAM

Display tube		
SW1-1	ON 1	ON 1
Mode	OFF	ON
Factory default	✓	

Set/outdoor only		
SW1-2	ON 2	ON 2
Mode	Outdoor only	Set
Factory default	✓	

Unit type		
SW2-1	ON 1	ON 1
Mode	Heat pump	Cooling only
Factory default	✓	

Anti-cold		
SW2-2	ON 2	ON 2
Mode	YES	NO
Factory default	✓	

Dry Mode		
SW3-1	ON 1	ON 1
Mode	Aux-heat	Set
Factory default	✓	

Frequency Time		
SW3-2	ON 2	ON 2
Mode	3H	1H
Factory default	✓	

Set/indoor only		
SW4-1	ON 1	ON 1
Mode	Set/out-door only	Indoor only
Factory default	✓	

Indoor control		
SW4-2	ON 2	ON 2
Mode	Fan High	Fan Middle
Factory default	✓	

NOTE: If the SW4-1 is **ON**, the SW4-2 takes effect, otherwise the SW1-2 takes effect.

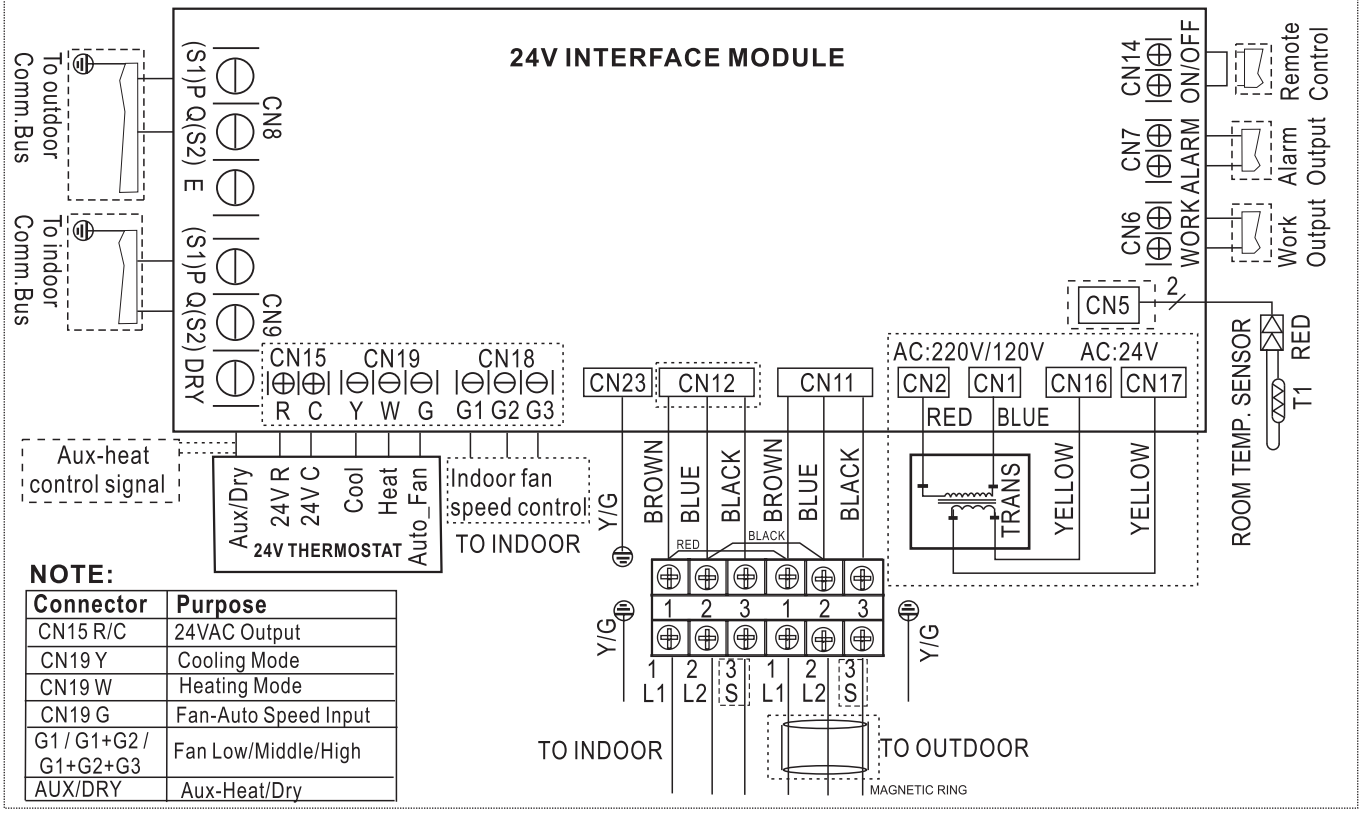

NOTE:

Connector	Purpose
CN15 R/C	24VAC Output
CN19 Y	Cooling Mode
CN19 W	Heating Mode
CN19 G	Fan-Auto Speed Input
G1 / G1+G2 / G1+G2+G3	Fan Low/Middle/High
AUX/DRY	Aux-Heat/Dry

Fig. 14 —Wiring Diagram