**PG80ESUA**
**4-WAY MULTIPOISE, ULTRA LOW NOX**
**80% AFUE GAS FURNACE**

# Installation, Start–Up Operating and Service and Maintenance Instructions Minor Series B


SAFETY CONSIDERATIONS . . . . . 2
INTRODUCTION . . . . . 2
CODES AND STANDARDS . . . . . 4
SAFETY . . . . . 4
GENERAL INSTALLATION . . . . . 4
COMBUSTION AND VENTILATION AIR . . . . . 4
DUCT SYSTEMS . . . . . 4
ACOUSTICAL LINING AND FIBROUS GLASS DUCT 4
GAS PIPING AND GAS PIPE PRESSURE TESTING . . . 4
ELECTRICAL CONNECTIONS . . . . . 4
VENTING . . . . . 4
ELECTROSTATIC DISCHARGE PRECAUTIONS PROCEDURE . . . . . 4
LOCATION . . . . . 5
SAFETY CONSIDERATIONS . . . . . 7
AIR FOR COMBUSTION AND VENTILATION . . . . . 7
INSTALLATION . . . . . 8
UPFLOW INSTALLATION . . . . . 8
DOWNFLOW INSTALLATION . . . . . 9
HORIZONTAL INSTALLATION . . . . . 10
AIR DUCTS . . . . . 11
GAS PIPING . . . . . 13
ELECTRICAL CONNECTIONS . . . . . 16
115-V WIRING . . . . . 16
J-BOX RELOCATION . . . . . 16
24-V WIRING . . . . . 17
ACCESSORIES . . . . . 17
VENTING . . . . . 19
MASONRY CHIMNEY REQUIREMENTS . . . . . 19
APPLIANCE APPLICATION REQUIREMENTS . . . . . 20
ADDITIONAL VENTING REQUIREMENTS . . . . . 22
SIDEWALL VENTING . . . . . 22
START-UP, ADJUSTMENT, AND SAFETY CHECK . . . . . 23
GENERAL . . . . . 23
START-UP PROCEDURES . . . . . 24
ADJUSTMENTS . . . . . 24
AIR DELIVERY - CFM . . . . . 14
CHECK SAFETY CONTROLS . . . . . 26
CHECKLIST . . . . . 26
SERVICE AND MAINTENANCE PROCEDURES . . . . . 29
ELECTRICAL CONTROLS AND WIRING . . . . . 29
CARE AND MAINTENANCE . . . . . 30
COMPONENT TEST . . . . . 37
CLEANING AND/OR REPLACING AIR FILTER . 31
BLOWER MOTOR AND WHEEL . . . . . 31
FLAME SENSOR CLEANING AND SERVICING . 32
CLEANING HEAT EXCHANGER . . . . . 33
SEQUENCE OF OPERATION . . . . . 34
SERVICE GUIDE . . . . . 37
WIRING DIAGRAMS . . . . . 36
PARTS REPLACEMENT INFORMATION GUIDE . . . . 38


ISO 9001 Quality

Use of the AHRI Certified TM Mark indicates a manufacturer's participation in the program. For verification of certification for individual products, go to www.ahridirectory.org.

**Approved for installations up to 5,400 feet (1646 meters)**

**NOTE**: Read the entire instruction manual before starting the installation.

Portions of the text and tables are reprinted from current edition of NFPA 54/ANSI Z223.1©, with permission of National Fire Protection Association, Quincy, MA 02269 and American Gas Association, Washington DC 20001. This reprinted material is not the complete and official position of the NFPA or ANSI on the referenced subject, which is represented only by the standard in its entirety.

## SAFETY CONSIDERATIONS

### ⚠ WARNING

**FIRE, EXPLOSION, ELECTRICAL SHOCK, AND CARBON MONOXIDE POISONING HAZARD**

Failure to follow this warning could result in dangerous operation, serious injury, death, or property damage.

Improper installation, adjustment, alteration, service, maintenance, or use could cause carbon monoxide poisoning, explosion, fire, electrical shock, or other conditions which may cause personal injury or property damage. Consult a qualified service agency, local gas supplier, or your distributor or branch for information or assistance. The qualified service agency must use only factory-authorized and listed kits or accessories when modifying this product.

### ⚠ CAUTION

**FURNACE RELIABILITY HAZARD**

Improper installation or misapplication of furnace may require excessive servicing or cause premature component failure.

Application of this furnace should be indoors with special attention given to vent sizing and material, gas input rate, air temperature rise, unit leveling, and unit sizing.

Improper installation, adjustment, alteration, service, maintenance, or use can cause explosion, fire, electrical shock, or other conditions which may cause death, personal injury, or property damage. Consult a qualified installer, service agency, or your distributor or branch for information or assistance. The qualified installer or agency must use factory-authorized kits or accessories when modifying this product. Refer to the individual instructions packaged with the kits or accessories when installing.

Follow all safety codes. Wear safety glasses, protective clothing, and work gloves. Have a fire extinguisher available. Read these instructions thoroughly and follow all warnings or cautions include in literature and attached to the unit. Consult local building codes, the current editions of the current edition of National Fuel Gas Code (NFGC) NFPA 54/ANSI Z223.1 and the current edition of National Electrical Code (NEC) NFPA 70.

Recognize safety information. This is the safety-alert symbol ⚠. When you see this symbol on the unit and in instructions or manuals, be alert to the potential for personal injury.

Understand the signal words **DANGER**, **WARNING**, and **CAUTION**. These words are used with the safety-alert symbol. **DANGER** identifies the most serious hazards which **will** result in severe personal injury or death. **WARNING** signifies hazards which **could** result in personal injury or death. **CAUTION** is used to identify unsafe practices which **may** result in minor personal injury or product and property damage. **NOTE** is used to highlight suggestions which **will** result in enhanced installation, reliability, or operation.

### ⚠ CAUTION

**CUT HAZARD**

Failure to follow this caution may result in personal injury.

Sheet metal parts may have sharp edges or burrs. Use care and wear appropriate protective clothing, safety glasses and gloves when handling parts and servicing furnaces.

1. Use only with type of gas approved for this furnace. Refer to the furnace rating plate.
2. Install this furnace only in a location and position as specified in the "Location" section of these instructions.
3. Provide adequate combustion and ventilation air to the furnace space as specified in "Air for Combustion and Ventilation" section.
4. Combustion products must be discharged outdoors. Connect this furnace to an approved vent system only, as specified in the "Venting" section of these instructions.
5. Never test for gas leaks with an open flame. Use a commercially available soap solution made specifically for the detection of leaks to check all connections, as specified in the "Gas Piping" section.
6. Always install furnace to operate within the furnace's intended temperature-rise range with a duct system which has an external static pressure within the allowable range, as specified in the "Start-Up, Adjustments, and Safety Check" section. See furnace rating plate.
7. When a furnace is installed so that supply ducts carry air circulated by the furnace to areas outside the space containing the furnace, the return air shall also be handled by duct(s) sealed to the furnace casing and terminating outside the space containing the furnace. See "Air Ducts" section.
8. A gas-fired furnace for installation in a residential garage must be installed as specified in the warning box in the "Location" section (see Fig. 5).
9. The furnace is not permitted to be used for heating of buildings under construction.
10. These Multipoise Gas-Fired Furnaces are CSA (formerly A.G.A. and C.G.A). design-certified for use with natural gas (see furnace rating plate) and for installation in alcoves, attics, basements, closets, utility rooms, crawlspaces, and garages. The furnace is factory-shipped for use with natural gas and cannot be converted to propane gas.
11. See Fig. 2 for required clearances to combustible construction.
12. Maintain a 1-in. (25 mm) clearance from combustible materials to supply air ductwork for a distance of 36 inches (914 mm) horizontally from the furnace. See current edition of NFPA 90B or local code for further requirements.
13. These furnaces SHALL NOT be installed directly on carpeting, tile, or any other combustible material other than wood flooring. In downflow installations, factory accessory floor base MUST be used when installed on combustible materials and wood flooring. Special base is not required when this furnace is installed on manufacturer's approved coil assembly or a manufacturer's coil casing box is used. See Fig. 2 for clearance to combustible construction.

## INTRODUCTION

This 4-way multipoise Category I fan-assisted furnace is CSA design-certified. A Category I fan-assisted furnace is an appliance equipped with an integral mechanical means to either draw or force products of combustion through the combustion chamber and/or heat exchanger. The furnace is factory-shipped for use with natural gas.

This furnace is not approved for installation in mobile homes, recreational vehicles, or outdoors. The furnace is not permitted to be used for heating of buildings under construction. This furnace is designed for minimum continuous return-air temperature of 60°F (16°C)db or intermittent operation down to 55°F (13°C) db such as when used with a night setback thermostat. Return-air temperature must not exceed 80°F (27°C) db. Failure to follow these return-air temperature limits may affect reliability of heat exchangers, motors, and controls. (See Fig. 3).

For accessory installation details, refer to the applicable instruction literature.

**NOTE**: Remove all shipping brackets and materials before operating the furnace.

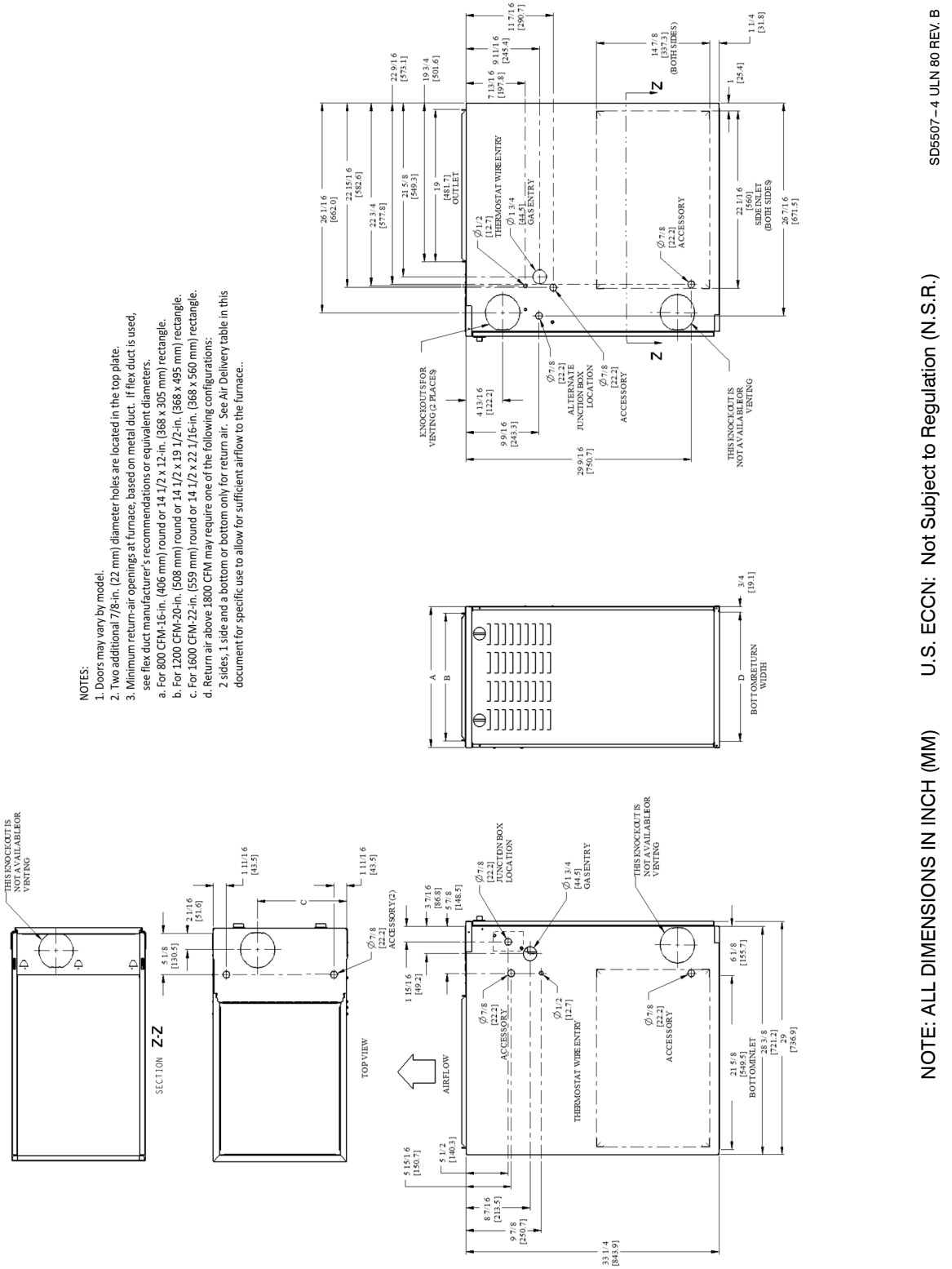


**Fig. 1 - Dimensional Drawing**

**Table 1 – Dimensions**

| FURNACE SIZE | A CABINET WIDTH IN. (MM) | B OUTLET WIDTH IN. (MM) | C TOP FLUE COLLAR ONLY IN. (MM) | D BOTTOM INLET WIDTH IN. (MM) | VENT CONNEC-TION IN. (MM) SIZE | SHIP WT. LB. (KG) | ACCESSORY FILTER MEDIA CABINET SIZE IN. (MM) |
|---|---|---|---|---|---|---|---|
| 36040B | 17–1/2 (445) | 15–7/8 (403) | 11–9/16 (294) | 16 (406) | 4 (102) | 118 (54) | 16 (406) |
| 48060B | 17–1/2 (445) | 15–7/8 (403) | 11–9/16 (294) | 16 (406) | 4 (102) | 126 (57) | 16 (406) |
| 60080C | 21 (533) | 19–3/8 (492) | 13–5/16 (338) | 19–1/2 (495) | 4 (102) | 140 (64) | 20 (508) |
| 60100C | 21 (533) | 19–3/8 (492) | 13–5/16 (338) | 19–1/2 (495) | 4 (102) | 150 (68) | 20 (508) |

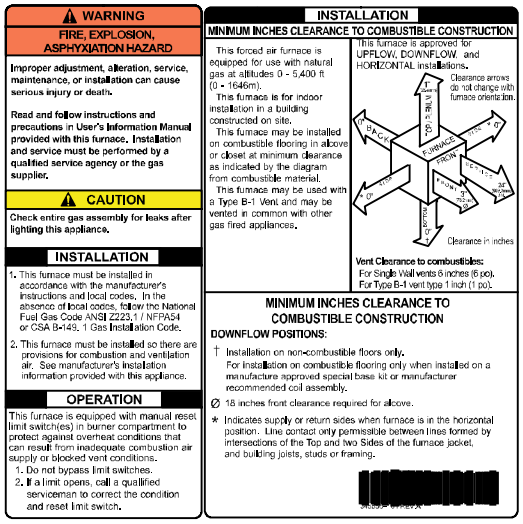


A190402

**Fig. 2 - Clearances to Combustibles**

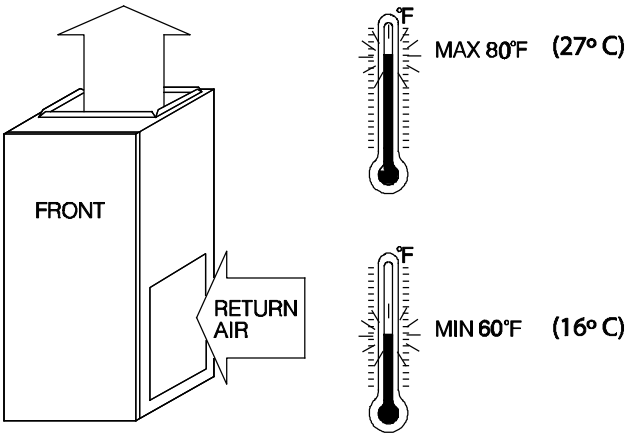


A02055

**Fig. 3 - Return Air Temperature**

## CODES AND STANDARDS

Follow all national and local codes and standards in addition to these instructions. The installation must comply with regulations of the serving gas supplier, local building, heating, plumbing, and other codes. In absence of local codes, the installation must comply with the national codes listed below and all authorities having jurisdiction.

In the United States, follow all codes and standards for the following:

**Safety**

- USA: Current edition of National Fuel Gas Code (NFGC) NFPA 54/ANSI Z223.1 and the Installation Standards, Warm Air Heating and Air Conditioning Systems ANSI/NFPA 90B

**General Installation**

- Current edition of the NFGC and the NFPA 90B. For copies, contact the National Fire Protection Association Inc., Batterymarch Park, Quincy, MA 02269; (www.NFPA.org) or for only the NFGC, contact the American Gas Association, 400 N. Capitol Street, N.W., Washington, DC 20001 (www.AGA.org).

**Combustion and Ventilation Air**

- Current edition of NFGC NFPA54/ANSI Z223.1 Section 9.3, Air for Combustion and Ventilation.

**Duct Systems**

- Air Conditioning Contractors Association (ACCA) Manual D, Sheet Metal and Air Conditioning Contractors National Association (SMACNA), or American Society of Heating, Refrigeration, and Air Conditioning Engineers (ASHRAE) 2005 Fundamentals Handbook Chapter 35 or 2004 HVAC Systems and Equipment Handbook Chapters 9 and 16.

**Acoustical Lining and Fibrous Glass Duct**

- Current edition of SMACNA and NFPA 90B as tested by UL Standard 181 for Class I Rigid Air Ducts

**Gas Piping and Gas Pipe Pressure Testing**

- Current edition of NFGC NFPA54/ANSI Z223.1; chapters 5, 6, 7, and 8 and National Plumbing Codes.

**Electrical Connections**

- Current edition of National Electrical Code (NEC) NFPA 70.

**Venting**

- Current edition of NFGC NFPA 54 / ANSI Z223.1; Chapters 12 and 13.

## ELECTROSTATIC DISCHARGE (ESD) PRECAUTIONS PROCEDURE

**⚠ CAUTION**

**FURNACE RELIABILITY HAZARD**

Improper installation or service of furnace may cause premature furnace component failure.

Electrostatic discharge can affect electronic components. Follow the Electrostatic Discharge Precautions Procedure listed below during furnace installation and servicing to protect the furnace electronic control. Precautions will prevent electrostatic discharges from personnel and hand tools which are held during the procedure. These precautions will help to avoid exposing the control to electrostatic discharge by putting the furnace, the control, and the person at the same electrostatic potential.

1. Disconnect all power to the furnace. Multiple disconnects maybe required. DO NOT TOUCH THE CONTROL OR ANY WIRE CONNECTED TO THE CONTROL PRIOR TO DISCHARGING YOUR BODY'S ELECTROSTATIC CHARGE TO GROUND.
2. Firmly touch the clean, unpainted, metal surface of the furnace chassis which is close to the control. Firmly touch the clean, unpainted, metal surface of the furnace chassis which is close to the control. Tools held in a person's hand during grounding will be satisfactorily discharged.
3. After touching the chassis, you may proceed to service the control or connecting wires as long as you do nothing to recharge your body with static electricity (for example; DO NOT move or shuffle your feet, do not touch ungrounded objects, etc.).
4. If you touch ungrounded objects (and recharge your body with static electricity), firmly touch a clean, unpainted metal surface of the furnace again before touching control or wires.
5. Use this procedure for installed and uninstalled (ungrounded) furnaces.
6. Before removing a new control from its container, discharge your body's electrostatic charge to ground to protect the control from damage. If the control is to be installed in a furnace, follow items 1 through 4 before bringing the control or yourself in contact with the furnace. Put all used and new controls into containers before touching ungrounded objects.
7. An ESD service kit (available from commercial sources) may also be used to prevent ESD damage.

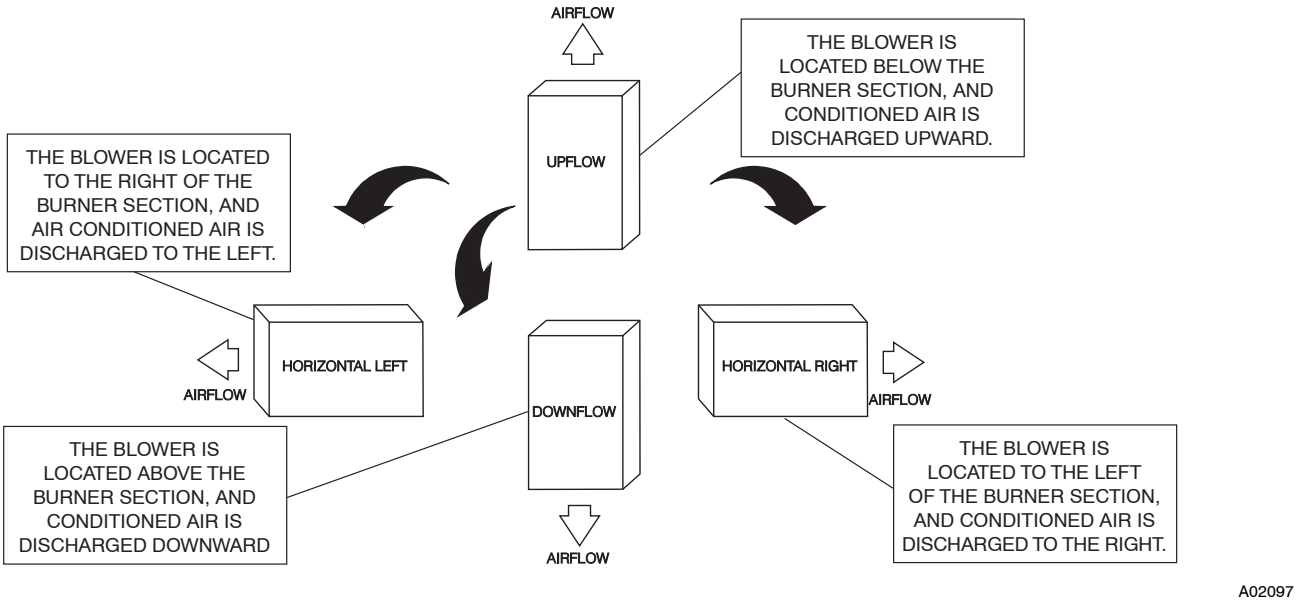


**Fig. 4 - Multipoise Orientations**

# LOCATION

## GENERAL

This multipoise furnace is shipped in packaged configuration. Some assembly and modifications are required when used in any of the four applications shown in Fig. 4.

This furnace must:

- be installed so the electrical components are protected from water.
- not be installed directly on any combustible material other than wood flooring for upflow applications. Downflow installations require use of a factory-approved floor base or coil assembly when installed on combustible materials or wood flooring (refer to SAFETY CONSIDERATIONS).
- be located close to the chimney or vent and attached to an air distribution system. Refer to Air Ducts section.
- be provided ample space for servicing and cleaning. Always comply with minimum fire protection clearances shown on the furnace clearance to combustible label.

**⚠ WARNING**

**CARBON MONOXIDE POISONING HAZARD**

Failure to follow this warning could result in personal injury or death, and unit component damage.

Corrosive or contaminated air may cause failure of parts containing flue gas, which could leak into the living space. Air for combustion must not be contaminated by halogen compounds, which include fluoride, chloride, bromide, and iodide. These elements can corrode heat exchangers and shorten furnace life. Air contaminants are found in aerosol sprays, detergents, bleaches, cleaning solvents, salts, air fresheners, and other household products. Do not install furnace in a corrosive or contaminated atmosphere. Make sure all combustion and circulating air requirements are met, in addition to all local codes and ordinances.

The following types of furnace installations may require OUTDOOR AIR for combustion due to chemical exposures:

- Commercial buildings
- Buildings with indoor pools
- Laundry rooms
- Hobby or craft rooms, and
- Chemical storage areas

If air is exposed to the following substances, it should not be used for combustion air, and outdoor air may be required for combustion:

- Permanent wave solutions
- Chlorinated waxes and cleaners
- Chlorine based swimming pool chemicals
- Water softening chemicals
- De-icing salts or chemicals
- Carbon tetrachloride
- Halogen type refrigerants
- Cleaning solvents (such as perchloroethylene)
- Printing inks, paint removers, varnishes, etc.
- Hydrochloric acid
- Cements and glues
- Antistatic fabric softeners for clothes dryers
- Masonry acid washing materials

All fuel-burning equipment must be supplied with air for fuel combustion. Sufficient air must be provided to avoid negative pressure in the equipment room or space. A positive seal must be made between the furnace cabinet and the return-air duct to prevent pulling air from the burner area and from draft safeguard opening.

**⚠ CAUTION**

**PERSONAL INJURY AND/OR PROPERTY DAMAGE**

Improper use or installation of this furnace may cause premature furnace component failure.

This furnace is not permitted to be used for heating of buildings under construction.

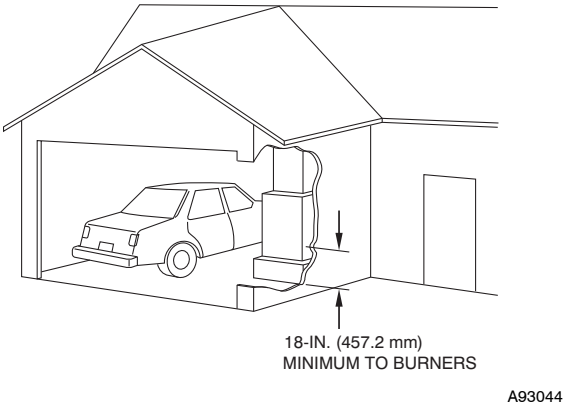


**Fig. 5 - Installation in a Garage**

## ⚠ WARNING

**FIRE HAZARD**

Failure to follow this warning could result in personal injury, death, and/or property damage.

When the furnace is installed in a residential garage, the burners and ignition sources must be located at least 18 inches above the floor. (See Fig. 5) The furnace must be located or protected to avoid damage by vehicles. When the furnace is installed in a public garage, airplane hangar, or other building having a hazardous atmosphere, the furnace must be installed in accordance with the NFGC.

**Table 2 – Minimum Free Area Required for Each Combustion Air Opening or Duct to Outdoors**

| FURNACE INPUT (BTUH) | TWO HORIZONTAL DUCTS (1 SQ. IN./2,000 BTUH) (1,100 SQ. MM/KW) | | SINGLE DUCT OR OPENING (1 SQ. IN./3,000 BTUH) (734 SQ. MM/KW) | | TWO OPENINGS OR VERTICAL DUCTS (1 SQ. IN./4,000 BTUH) (550 SQ. MM/KW) | |
|---|---|---|---|---|---|---|
| | Free Area of Opening and Duct Sq. In (Sq. mm) | Round Duct In. (mm) Dia | Free Area of Opening and Duct Sq. In (Sq. mm) | Round Duct In. (mm) Dia | Free Area of Opening and Duct Sq. In (mm) | Round Duct In. (mm) Dia. |
| **40,000** | 20 (12904) | 5 (127) | 14 (8696) | 5 (127) | 10 (6452) | 4 (102) |
| **60,000** | 30 (19355) | 6 (152) | 20 (13043) | 5 (127) | 15 (9678) | 5 (127) |
| **80,000** | 40 (25807) | 7 (178) | 27 (17391) | 6 (152) | 20 (12904) | 5 (127) |
| **100,000** | 50 (32258) | 8 (203) | 34 (21739) | 7 (178) | 25 (16130) | 6 (152) |

**EXAMPLE: Determining Free Area**

| FURNACE | | WATER HEATER | | TOTAL INPUT | | |
|---|---|---|---|---|---|---|
| 100,000 | + | 30,000 | = | (130,000 divided by 4,000) | = | 32.5 Sq. In. for each two Vertical Ducts or Openings |
| 60,000 | + | 40,000 | = | (100,000 divided by 3,000) | = | 33.3 Sq. In. for each Single Duct or Opening |
| 80,000 | + | 30,000 | = | (110,000 divided by 2,000) | = | 55.0 Sq. In. for each two Horizontal Ducts |

**Table 3 – Minimum Space volumes for 100% combustion, Ventilation, and Dilution from Indoors**

| ACH* | OTHER THAN FAN–ASSISTED TOTAL (1,000'S BTUH GAS INPUT RATE | | | FAN–ASSISTED TOTAL (1,000'S BTUH GAS INPUT RATE) | | | |
|---|---|---|---|---|---|---|---|
| | 30 | 40 | 50 | 40 | 60 | 80 | 100 |
| | Space Volume (ft.$^3$) | | | | | | |
| 0.60 | 1,050 | 1,400 | 1,750 | 1,000 | 1,500 | 2,000 | 3,300 |
| 0.50 | 1,260 | 1,680 | 2,100 | 1,200 | 1,800 | 2,400 | 3,960 |
| 0.40 | 1,575 | 2,100 | 2,625 | 1,500 | 2,250 | 3,000 | 4,950 |
| 0.30 | 2,100 | 2,800 | 3,500 | 2,000 | 3,000 | 4,000 | 6,600 |
| 0.20 | 3,150 | 4,200 | 5,250 | 3,000 | 4,500 | 6,000 | 9,900 |
| 0.10 | 6,300 | 8,400 | 10,500 | 6,000 | 9,000 | 12,000 | 19,800 |
| 0.00 | NP | NP | NP | NP | NP | NP | NP |

*Air Changes/Hour

## ⚠ WARNING

**FIRE HAZARD**

Failure to follow this warning could result in personal injury, death and/or property damage.

Do not install the furnace on its back or hang furnace with control compartment facing downward. Safety control operation will be adversely affected. Never connect return-air ducts to the back of the furnace. (See Fig. 6)

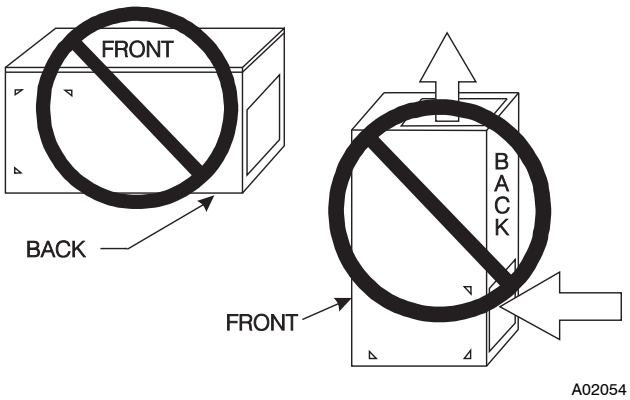


**Fig. 6 - Prohibit Installation on Back**

## ⚠ CAUTION

**FURNACE CORROSION HAZARD**

Failure to follow this caution may result in furnace damage.

Air for combustion must not be contaminated by halogen compounds, which include fluoride, chloride, bromide, and iodide. These elements can corrode heat exchangers and shorten furnace life. Air contaminants are found in aerosol sprays, detergents, bleaches, cleaning solvents, salts, air fresheners, and other household products.

**LOCATION RELATIVE TO COOLING EQUIPMENT**

The cooling coil must be installed parallel with, or on the downstream side of the unit to avoid condensation in the heat exchangers. When installed parallel with the furnace, dampers or other flow control must prevent chilled air from entering the furnace. If the dampers are manually operated, they must be equipped with means to prevent operation of either unit unless the damper is in the full-heat or full-cool position.

## AIR FOR COMBUSTION AND VENTILATION

Provisions for adequate combustion, ventilation, and dilution air must be provided in accordance with:

- U.S. installations: Section 9.3 of the current edition of NFGC NFPA54/ANSI Z223.1, Air for Combustion and Ventilation, and applicable provisions of the local building codes.

## ⚠ WARNING

**CARBON MONOXIDE POISONING HAZARD**

Failure to follow this warning could result in personal injury or death.

The operation of exhaust fans, kitchen ventilation fans, clothes dryers, attic exhaust fans or fireplaces could create a NEGATIVE PRESSURE CONDITION at the furnace. Make-up air MUST be provided for the ventilation devices, in addition to that required by the furnace. Refer to Carbon Monoxide Poisoning Hazard warning in venting section of these instructions to determine if an adequate amount of make-up air is available.

The requirements for combustion and ventilation air depend upon whether or not the furnace is located in a space having a volume of at least 50 cubic feet per 1,000 Btuh input rating for all gas appliances installed in the space.

- Spaces having less than 50 cubic feet per 1,000 Btuh require the **OUTDOOR COMBUSTION AIR METHOD.**
- Spaces having at least 50 cubic feet per 1,000 Btuh may use the **INDOOR COMBUSTION AIR, STANDARD or KNOWN AIR INFILTRATION** METHOD.

**Outdoor Combustion Air Method**

1. Provide the space with sufficient air for proper combustion, ventilation, and dilution of flue gases using permanent horizontal or vertical duct(s) or opening(s) directly communicating with the outdoors or spaces that freely communicate with the outdoors.
2. Fig. 7 illustrates how to provide TWO OUTDOOR OPENINGS, one inlet and one outlet combustion and ventilation air opening, to the outdoors.
   a. One opening **MUST** commence within 12-in. (300 mm) of the ceiling and the second opening **MUST** commence within 12-in. (300 mm) of the floor.
   b. Size openings and ducts per Fig. 7 and Table 2.

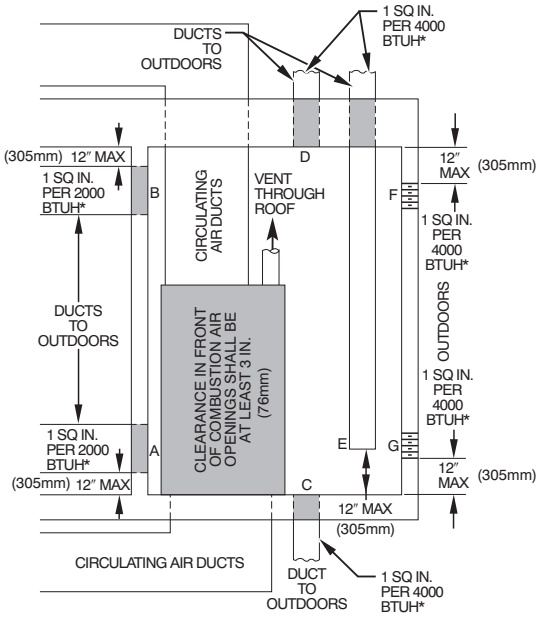


*Minimum dimensions of 3 in. (76 mm).

NOTE: Use any of the following combinations of openings: A&B, C&D, D&E, F&G

A03174

**Fig. 7 - Air for Combustion, Ventilation, and Dilution from Outdoors**

   c. TWO HORIZONTAL DUCTS require 1 square inch of free area per 2,000 Btuh (1,100 $mm^2$/kW) of combined input for all gas appliances in the space per Fig. 7 and Table 2.
   d. TWO OPENINGS OR VERTICAL DUCTS require 1 square inch of free area per 4,000 Btuh (550 $mm^2$/kW) for combined input of all gas appliances in the space per Fig. 7 and Table 2.
3. ONE OUTDOOR OPENING requires:
   a. 1 square inch of free area per 3,000 Btuh (734 $mm^2$/kW) for combined input of all gas appliances in the space per Table 2 and
   b. Not less than the sum of the areas of all vent connectors in the space.

The opening shall commence within 12" (300 mm) of the ceiling. Appliances in the space shall have clearances of at least 1" (25 mm) from the sides and back and 6" (150 mm) from the front. The opening shall directly communicate with the outdoors or shall communicate through a vertical or horizontal duct to the outdoors or spaces (crawl or attic) that freely communicate with the outdoors.

**Indoor Combustion Air** - NFPA & AGA

**Standard and Known-Air-Infiltration Rate** Methods

**Indoor air** is permitted for combustion, ventilation, and dilution, if the **Standard** or **Known-Air-Infiltration** Method is used.

## ⚠ WARNING

**CARBON MONOXIDE POISONING HAZARD**

Failure to follow this warning could result in death and/or personal injury.

Many homes require air to be supplied from outdoors for furnace combustion, ventilation, and dilution of flue gases. The furnace combustion air supply must be provided in accordance with this instruction manual.

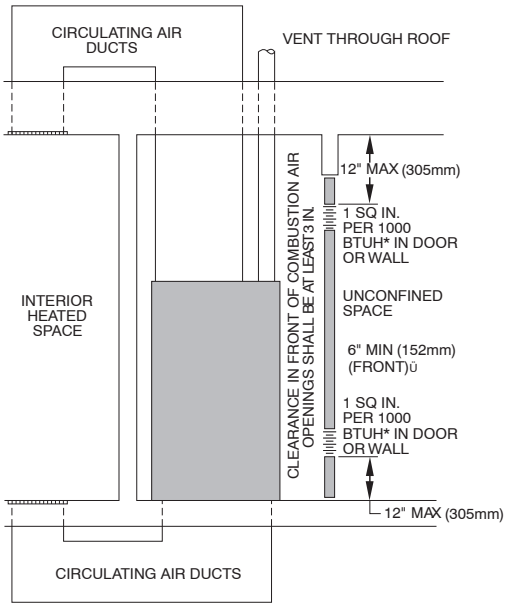


*Minimum opening size is 100 in.$^2$ with minimum dimensions of 3 in. (76 mm).
*Minimum of 3 in. (76 mm), when type –B1 vent is used.

A03175

**Fig. 8 - Air for Combustion, Ventilation, and Dilution from Indoors**

The **Standard** Method:

1. The space has no less volume than 50 cubic feet per 1,000 Btuh of the maximum input ratings for all gas appliances installed in the space and
2. The air infiltration rate is not known to be less than 0.40 air changes per hour (ACH).

The **Known Air Infiltration** Rate Method shall be used, if the infiltration rate is known to be:

1. Less than 0.40 ACH and
2. Equal to or greater than 0.10 ACH

Infiltration rates greater than 0.60 ACH shall not be used. The minimum required volume of the space varies with the number of ACH and shall be determined per Table 3 or Equations 1 and 2. Determine the minimum required volume for each appliance in the space and add the volumes together to get the total minimum required volume for the space.

**Table 3 - Minimum Space Volumes** were determined by using the following equations from the current edition of National Fuel Gas Code ANSI Z223.1/NFPA 54, 9.3.2.2:

1. For **other than fan-assisted appliances**, such as a draft hood-equipped water heater:

$$\text{Volume}_{\text{Other}} = \frac{21\text{ft}^3}{\text{ACH}}\left(\frac{I_{\text{other}}}{1000\ \text{Btu/hr}}\right)$$

A04002

2. For **fan-assisted appliances** such as this furnace:

$$\text{Volume}_{\text{Fan}} = \frac{15\text{ft}^3}{\text{ACH}}\left(\frac{I_{\text{fan}}}{1000\ \text{Btu/hr}}\right)$$

A004003

If:

$I_{other}$ = combined input of all other than fan-assisted appliances in Btuh/hr

$I_{fan}$ = combined input of all fan-assisted appliances in Btuh/hr

ACH = air changes per hour (ACH shall not exceed 0.60.)

The following requirements apply to the Standard Method and to the Known Air Infiltration Rate Method.

1. Adjoining rooms can be considered part of a space if:
   a. There are no closeable doors between rooms.
   b. Combining spaces on same floor level. Each opening shall have free area of at least 1 in.$^2$/1,000 Btuh (2,000 mm$^2$/kW) of the total input rating of all gas appliances in the space, but not less than 100 in.$^2$ (0.06 m$^2$). One opening shall commence within 12" (300 mm) of the ceiling and the second opening shall commence within 12" (300 mm) of the floor. The minimum dimension of air openings shall be at least 3 in. (80 mm). (See Fig. 8)
   c. Combining space on different floor levels. The volumes of spaces on different floor levels shall be considered as communicating spaces if connected by one or more permanent openings in doors or floors having free area of at least 2 in.$^2$/1,000 Btuh (4,400 mm$^2$/kW) of total input rating of all gas appliances.
2. An attic or crawlspace may be considered a space that freely communicates with the outdoors provided there are adequate permanent ventilation openings directly to outdoors having free area of at least 1-in.$^2$/4,000 Btuh of total input rating for all gas appliances in the space.
3. In spaces that use the Indoor **Combustion Air Method**, infiltration should be adequate to provide air for combustion, permanent ventilation and dilution of flue gases. However, in buildings with unusually tight construction, additional air MUST be provided using the methods described in the **Outdoor Combustion Air** Method section.

Unusually tight construction is defined as construction with:

a. Walls and ceilings exposed to the outdoors have a continuous, sealed vapor barrier. Openings are gasketed or sealed and
b. Doors and openable windows are weatherstripped and
c. Other openings are caulked or sealed. These include joints around window and door frames, between sole plates and floors, between wall-ceiling joints, between wall panels, at penetrations for plumbing, electrical and gas lines, etc.

**Combination of Indoor and Outdoor Air**

1. Indoor openings shall comply with the Indoor Combustion Air Method below and,
2. Outdoor openings shall be located as required in the **Outdoor Combustion** Air Method mentioned previously and,
3. Outdoor openings shall be sized as follows:
   a. Calculate the Ratio of all Indoor Space volume divided by required volume for **Indoor Combustion Air** Method below.
   b. Outdoor opening size reduction Factor is 1 minus the Ratio in a. above.
   c. Minimum size of Outdoor openings shall be the size required in Outdoor Combustion Air Method above multiplied by reduction Factor in b. above. The minimum dimension of air openings shall be not less than 3 in. (80 mm).

# INSTALLATION

## UPFLOW INSTALLATION

### Bottom Return Air Inlet

These furnaces are shipped with bottom closure panel installed in bottom return-air opening. Remove and discard this panel when bottom return air is used. To remove bottom closure panel, perform the following:

1. Tilt or raise furnace and remove two screws holding bottom filler panel. (See Fig. 9)

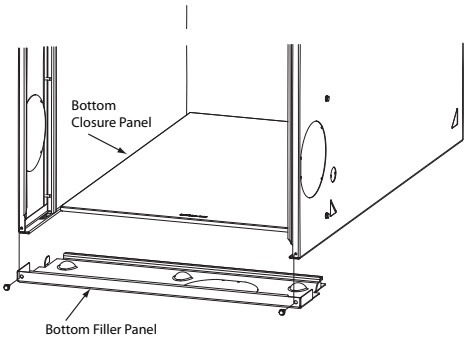


A10273

**Fig. 9 - Removing Bottom Closure Panel**

2. Rotate bottom filler panel downward to release holding tabs.
3. Remove bottom closure panel.
4. Reinstall bottom filler panel and screws.

**Side Return Air Inlet**

These furnaces are shipped with bottom closure panel installed in bottom return-air opening. This panel MUST be in place when only side return air is used.

**NOTE**: Side return-air openings can be used in UPFLOW and most HORIZONTAL configurations. Do not use side return-air openings in DOWNFLOW configuration.

**Leveling Legs (If Desired)**

In upflow position with side return inlet(s), leveling legs may be used. (See Fig. 10) Install field-supplied, 5/16 x 1-1/2 in. (8 x 38 mm) (max) corrosion-resistant machine bolts, washers and nuts.

**NOTE**: Bottom closure must be used when leveling legs are used. It may be necessary to remove and reinstall bottom closure panel to install leveling legs. To remove bottom closure panel, see Item 1. in Bottom Return Air Inlet section.

To install leveling legs:

1. Position furnace on its back. Locate and drill a hole in each bottom corner of furnace. (See Fig. 10)

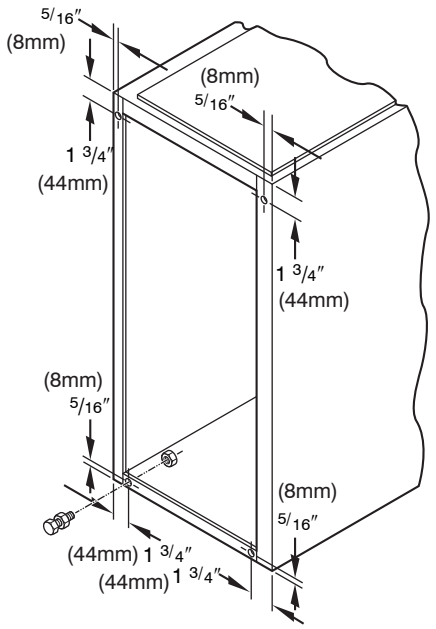


A89014

**Fig. 10 - Leveling Legs**

2. For each leg, install nut on bolt and then install bolt and nut in hole. (Install flat washer if desired.)
3. Install another nut on other side of furnace base. (Install flat washer if desired.)
4. Adjust outside nut to provide desired height, and tighten inside nut to secure arrangement.
5. Reinstall bottom closure panel if removed.

**DOWNFLOW INSTALLATION**

**NOTE**: For downflow applications, this furnace is approved for use on combustible flooring when any one of the following 3 accessories are used:

- Downflow combustible floor subbase
- Manufacturer's approved Cased Coil
- Manufacturer's approved Coil Casing

1. Determine application being installed from Table 4.
2. Construct hole in floor per Table 4 and Fig. 11.
3. Construct plenum to dimensions specified in Table 4 and Fig. 11.
4. If downflow subbase is used, install as shown in Fig. 12. If Coil or Coil Casing, install as shown in Fig. 13.

**NOTE**: It is required that the perforated supply-air duct flanges be completely folded over or removed from furnace when installing the furnace on a factory-supplied cased coil or coil box. To remove the supply-air duct flange, use wide duct pliers or hand seamers to bend flange back and forth until it breaks off. Be careful of sharp edges. (See Fig. 14)

**Bottom Return Air Inlet**

These furnaces are shipped with bottom closure panel installed in bottom return-air opening. Remove and discard this panel when bottom return air is used. To remove bottom closure panel, perform the following:

1. Tilt or raise furnace and remove two screws holding bottom filler panel. (See Fig. 9)
2. Rotate bottom filler panel downward to release holding tabs.
3. Remove bottom closure panel.
4. Reinstall bottom filler panel and screws

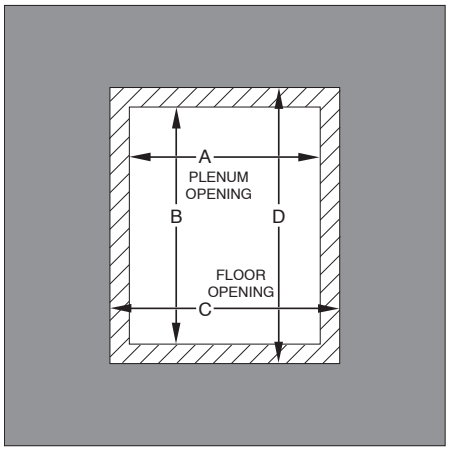


A96283

**Fig. 11 - Floor and Plenum Opening Dimensions**

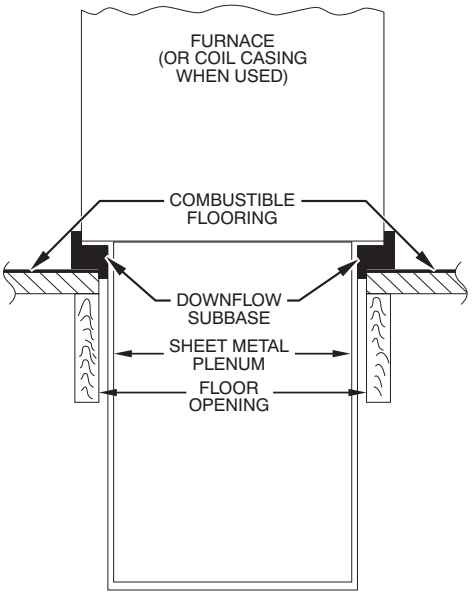


**Fig. 12 - Furnace, Plenum, and Subbase Installed on a Combustible Floor**

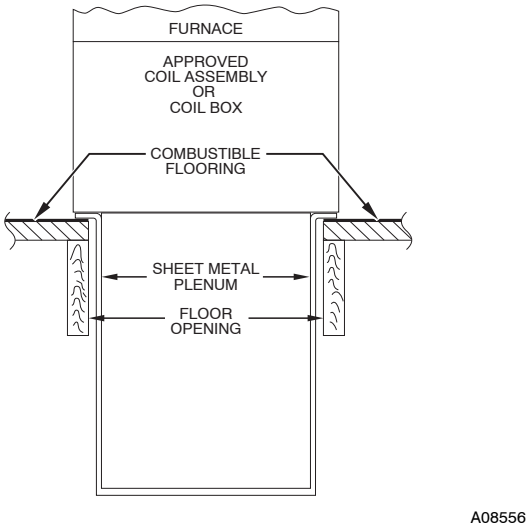


**Fig. 13 - Furnace, Plenum, and Coil Assembly or Coil Box Installed on a Combustible Floor**

**Table 4 – Opening Dimensions - In. (mm)**

| FURNACE CASING WIDTH | APPLICATION | PLENUM OPENING | | FLOOR OPENING | |
|---|---|---|---|---|---|
| | | A | B | C | D |
| 17–1/2 (445) | Upflow Applications on Combustible or Noncombustible Flooring (subbase not required) | 16 (406) | 21–5/8 (549) | 16–5/8 (422) | 22–1/4 (565) |
| | Downflow Applications on Noncombustible Flooring (subbase not required) | 15–7/8 (403) | 19 (483) | 16–1/2 (419) | 19–5/8 (498) |
| | Downflow applications on combustible flooring (subbase required) | 15–1/8 (384) | 19 (483) | 16–3/4 (425) | 20–5/8 (600) |
| | Downflow Applications on Combustible Flooring with Coil Assembly or coil box (subbase not required) | 15–1/2 (394) | 19 (483) | 16–1/2 (419) | 20 (508) |
| 21 (533) | Upflow Applications on Combustible or Noncombustible Flooring (subbase not required) | 19–1/2 (495) | 21–5/8 (549) | 20–1/8 (511) | 22–1/4 (565) |
| | Downflow Applications on Noncombustible Flooring (subbase not required) | 19–3/8 (492) | 19 (483) | 20 (508) | 19–5/8 (498) |
| | Downflow applications on combustible flooring subbase required) | 18–5/8 (473) | 19 (483) | 20–1/4 (514) | 20–5/8 (600) |
| | Downflow Applications on Combustible Flooring with Coil Assembly or coil box (subbase not required) | 19 (483) | 19 (483) | 20 (508) | 20 (508) |

## HORIZONTAL INSTALLATION

**⚠ WARNING**

**FIRE, EXPLOSION, AND CARBON MONOXIDE POISONING HAZARD**

Failure to follow this warning could result in personal injury, death, and/or property damage.

Do not install the furnace on its back or hang furnace with control compartment facing downward. Safety control operation will be adversely affected. Never connect return-air ducts to the back of the furnace.

The furnace can be installed horizontally in an attic or crawl space on either the left-hand (LH) or right-hand (RH) side. The furnace can be hung from floor joists, rafters or trusses or installed on a non-combustible platform, blocks, bricks or pad.

### Suspended Furnace Support

The furnace may be supported under each end with threaded rod, angle iron or metal plumber's strap as shown. (See Fig. 15 and 16) Secure angle iron to bottom of furnace as shown. Heavy-gauge sheet metal straps (plumber's straps) may be used to suspend the furnace from each bottom corner. To prevent screws from pulling out, use 2 #8 x 3/4-in. (19 mm) screws into the side and 2 #8 x 3/4-in. (19 mm) screws in the bottom of the furnace casing for each strap. (See Fig. 15 and 16) If the screws are attached to ONLY the furnace sides and not the bottom, the straps must be vertical against the furnace sides and not pull away from the furnace sides, so that the strap attachment screws are not in tension (are loaded in shear) for reliable support.

### Platform Furnace Support

Construct working platform at location where all required furnace clearances are met. (See Fig. 2 and 17) For furnaces with 1-in. (25 mm) clearance requirement on side, set furnace on noncombustible blocks, bricks or angle iron. For crawl space installations, if the furnace is not suspended from the floor joists, the ground underneath furnace must be level and the furnace set on blocks or bricks.

### Roll-Out Protection

Provide a minimum 17-3/4 in. x 22 in. (451 mm x 559 mm) piece of sheet metal for flame roll-out protection in front of burner area for furnaces closer than 12 inches (305 mm) above the combustible deck or suspended furnaces closer than 12 inches (305 mm) to joists. The sheet metal MUST extend underneath the furnace casing by 1 in. (25 mm) with the door removed.

The bottom closure panel on furnaces of widths 17-1/2 in. (445 mm) and larger may be used for flame roll-out protection when bottom of furnace is used for return air connection. See Fig. 17 for proper orientation of roll-out shield.

**Bottom Return Air Inlet**

These furnaces are shipped with bottom closure panel installed in bottom return-air opening. Remove and discard this panel when bottom return air is used. To remove bottom closure panel, perform the following:

1. Tilt or raise furnace and remove two screws holding bottom filler panel. (See Fig. 9)
2. Rotate bottom filler panel downward to release holding tabs.
3. Remove bottom closure panel.
4. Reinstall bottom filler panel and screws. Side Return Air Inlet

**Side Return Air Inlet**

These furnaces are shipped with bottom closure panel installed in bottom return-air opening. This panel MUST be in place when side return air inlet(s) is used without a bottom return air inlet.

**FILTER ARRANGEMENT**

**⚠ WARNING**

**CARBON MONOXIDE AND POISONING HAZARD**

Failure to follow this warning could result in personal injury, or death.

Never operate a furnace without a filter or with filter access door removed.

There are no provisions for an internal filter rack in these furnaces.

A field-supplied accessory external filter is required.

Refer to the instructions supplied with the external filter rack for assembly and installation options.

**AIR DUCTS**

**General Requirements**

The duct system should be designed and sized according to accepted national standards such as those published by: Air Conditioning Contractors Association (ACCA), Sheet Metal and Air Conditioning Contractors National Association (SMACNA) or American Society of Heating, Refrigerating and Air Conditioning Engineers (ASHRAE) or consult The Air Systems Design Guidelines reference tables available from your local distributor. The duct system should be sized to handle the required system design CFM at the design external static pressure. The furnace airflow rates are provided in Table 5 - AIR DELIVERY-CFM (with filter).

When a furnace is installed so that the supply ducts carry air circulated by the furnace to areas outside the space containing the furnace, the return air shall also be handled by duct(s) sealed to the furnace casing and terminating outside the space containing the furnace.

Secure ductwork with proper fasteners for type of ductwork used. Seal supply- and return-duct connections to furnace with code approved tape or duct sealer.

**NOTE**: Flexible connections should be used between ductwork and furnace to prevent transmission of vibration. Ductwork passing through unconditioned space should be insulated and sealed to enhance system performance. When air conditioning is used, a vapor barrier is recommended.

Maintain a 1-in. (25 mm) clearance from combustible materials to supply air ductwork for a distance of 36 in. (914 mm) horizontally from the furnace. See NFPA 90B or local code for further requirements.

**Ductwork Acoustical Treatment**

**NOTE**: Metal duct systems that do not have a 90 degree elbow and 10 ft. (3 M) of main duct to the first branch take-off may require internal acoustical lining. As an alternative, fibrous ductwork may be used if constructed and installed in accordance with the latest edition of SMACNA construction standard on fibrous glass ducts. Both acoustical lining and fibrous ductwork shall comply with NFPA 90B as tested by UL Standard 181 for Class 1 Rigid air ducts.

**Supply Air Connections**

For a furnace not equipped with a cooling coil, the outlet duct shall be provided with a removable access panel. This opening shall be accessible when the furnace is installed and shall be of such a size that the heat exchanger can be viewed for possible openings using light assistance or a probe can be inserted for sampling the airstream. The cover attachment shall prevent leaks.

**Upflow and Horizontal Furnaces**

Connect supply-air duct to flanges on furnace supply-air outlet. Bend flange upward to 90° with wide duct pliers. (See Fig. 14) The supply-air duct must be connected to ONLY the furnace supply-outlet-air duct flanges or air conditioning coil casing (when used). DO NOT cut main furnace casing side to attach supply air duct, humidifier, or other accessories. All accessories MUST be connected to duct external to furnace main casing.

**NOTE**: For horizontal applications, the top-most flange may be bent past 90 degrees to allow the evaporator coil to hang on the flange temporarily while the remaining attachment and sealing of the coil are performed.

**Downflow Furnaces**

Connect supply-air duct to supply-air outlet on furnace. Bend flange inward past 90° with wide duct pliers. (See Fig. 14) The supply-air duct must be connected to ONLY the furnace supply outlet or air conditioning coil casing (when used). When installed on combustible material, supply-air duct must be connected to ONLY the factory-approved accessory subbase or a factory-approved air conditioning coil casing. DO NOT cut main furnace casing to attach supply side air duct, humidifier, or other accessories. All accessories MUST be connected to duct external to furnace casing.

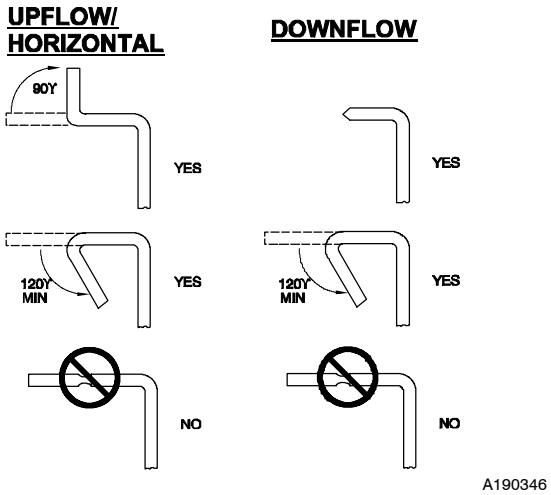


**Fig. 14 - Duct Flanges**

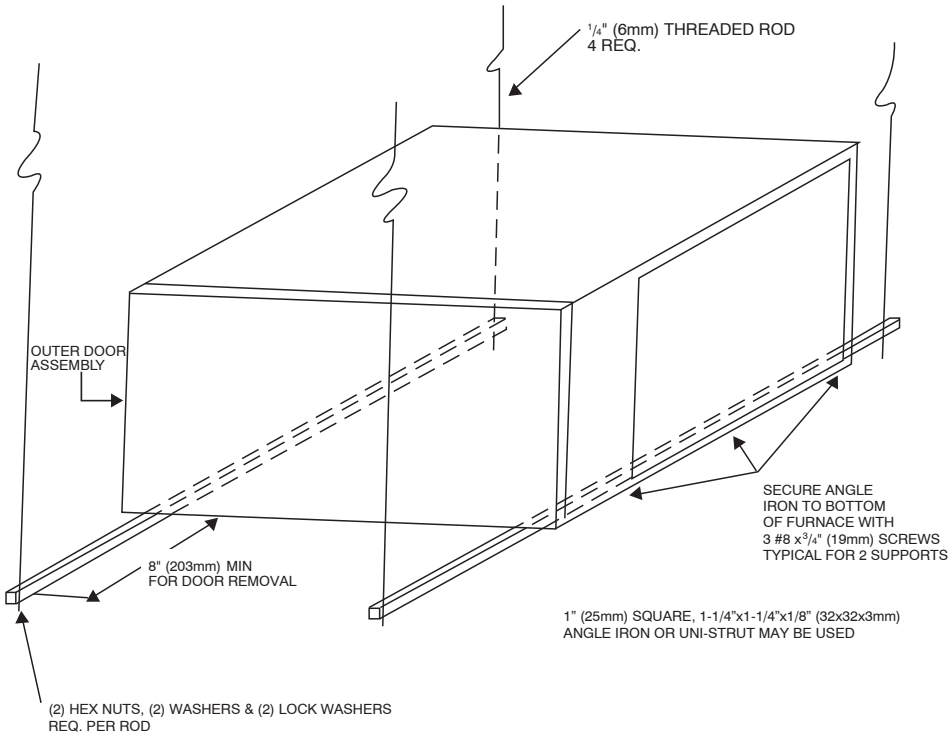


A10130

**Fig. 15 - Horizontal Unit Suspension**

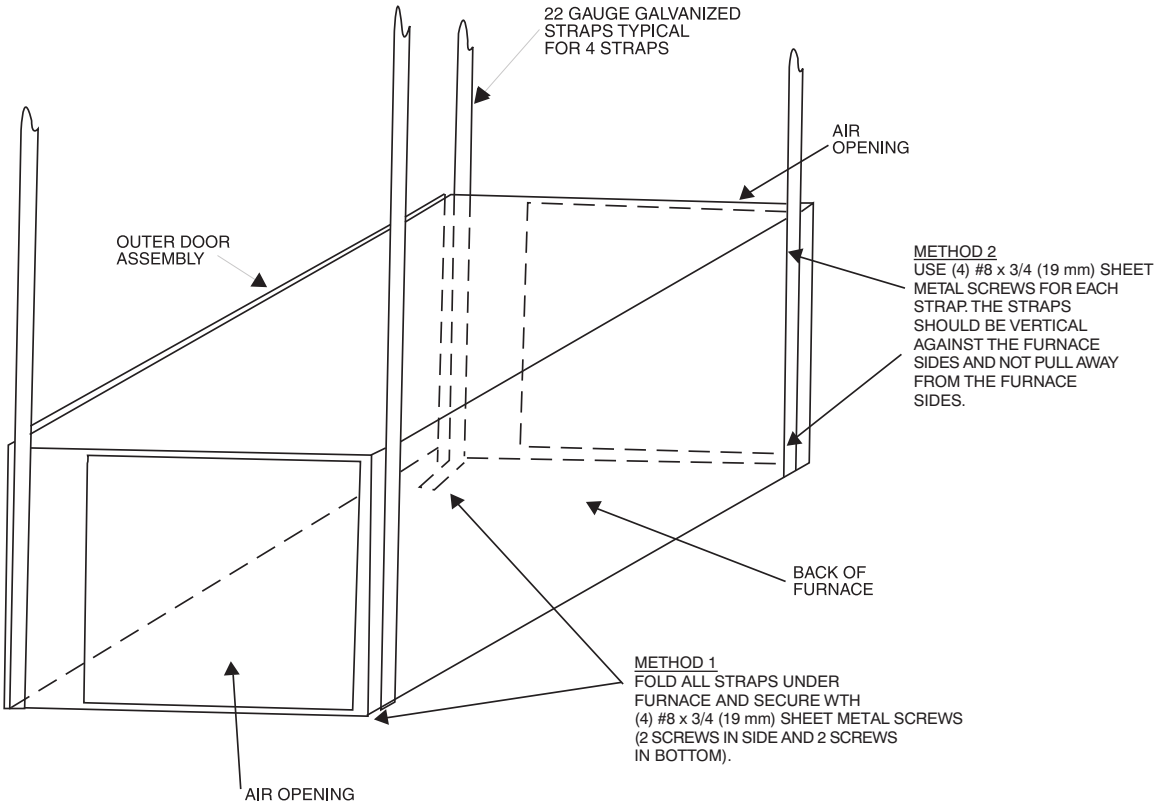


A10131

**Fig. 16 - Horizontal Suspension with Straps**

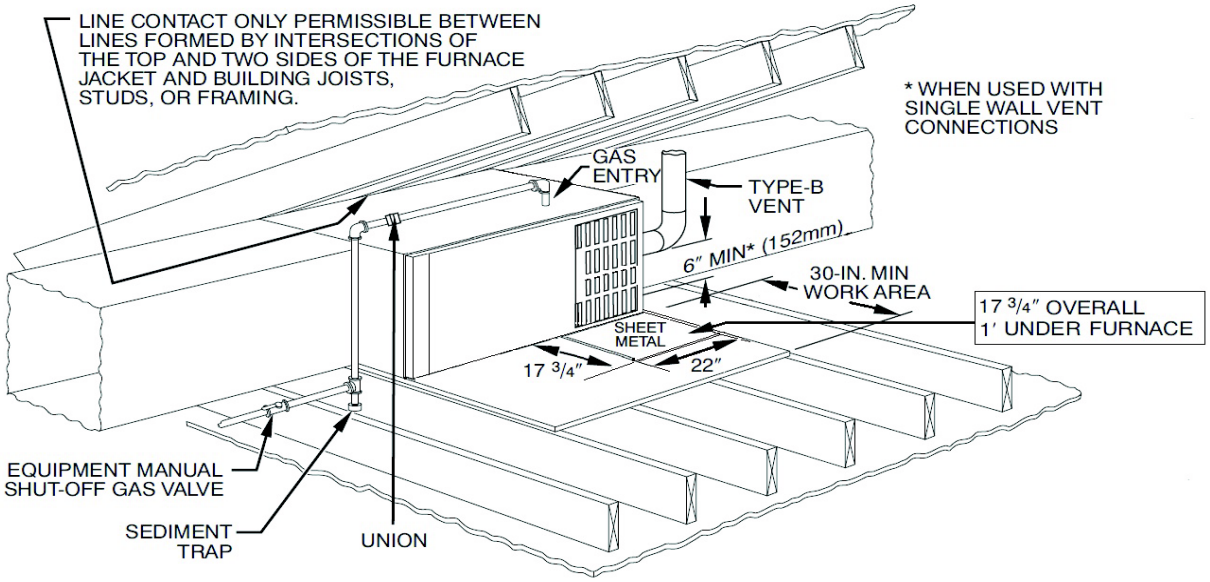


**Fig. 17 - Typical Attic Installation**

**Return Air Connections**

**⚠ WARNING**

**FIRE HAZARD**

Failure to follow this warning could cause personal injury, death and/or property damage.

Never connect return-air ducts to the back of the furnace. Follow instructions below

**Downflow Furnaces**

The return-air duct must be connected to return-air opening (bottom inlet) as shown in Fig. 20. DO NOT cut into casing sides (left or right). Side opening is permitted for only upflow and most horizontal furnaces. (See Fig. 20) Bypass humidifier connections should be made at ductwork or coil casing sides exterior to furnace.

**Upflow and Horizontal Furnaces**

The return-air duct must be connected to bottom, sides (left or right), or a combination of bottom and side(s) of main furnace casing as shown in Fig. 19 and 21. Bypass humidifier may be attached into unused return air side of the furnace casing. (See Fig. 19 and 21)

**GAS PIPING**

**⚠ WARNING**

**FIRE OR EXPLOSION HAZARD**

Failure to follow this warning could result in personal injury, death, and/or property damage.

Never purge a gas line into a combustion chamber. Never test for gas leaks with an open flame. Use a commercially available soap solution made specifically for the detection of leaks to check all connections.

**⚠ WARNING**

**FIRE OR EXPLOSION HAZARD**

Failure to follow this warning could result in personal injury,death, and/or property damage.

Use proper length of pipe to avoid stress on gas control assembly and a gas leak.

**⚠ CAUTION**

**FURNACE OVERHEAT HAZARD**

Failure to follow this caution may result in property damage.

Connect gas pipe to gas valve using a backup wrench to avoid damaging gas controls and burner misalignment.

**⚠ WARNING**

**FIRE OR EXPLOSION HAZARD**

Failure to follow this warning could result in personal injury, death, and/or property damage.

If local codes allow the use of a flexible gas appliance connector, always use a new listed connector. Do not use a connector which has previously served another gas appliance. Black iron pipe shall be installed at the furnace gas control valve and extend a minimum of 2 in.(51 mm) outside the furnace.

Gas piping must be installed in accordance with national and local codes. Refer to current edition of NFGC.

Installations must be made in accordance with all authorities having jurisdiction. If possible, the gas supply line should be a separate line running directly from meter to furnace.

**NOTE**: In the state of Massachusetts:

1. Gas supply connections MUST be performed by a licensed plumber or gas fitter.
2. When flexible connectors are used, the maximum length shall not exceed 36 inches (915 mm).

3. When lever handle type manual equipment shutoff valves are used, they shall be T-handle valves.
4. The use of copper tubing for gas piping is NOT approved by the state of Massachusetts.

Refer to Table 6 for recommended gas pipe sizing. Risers must be used to connect to furnace and to meter. Support all gas piping with appropriate straps, hangers, etc. Use a minimum of 1 hanger every 6 ft. (2 M). Joint compound (pipe dope) should be applied sparingly and only to male threads of joints. Pipe dope must be resistant to the action of propane gas.

An accessible manual equipment shutoff valve MUST be installed external to furnace casing and within 6 ft. (2 M) of furnace. A 1/8-in. (3 mm) NPT plugged tapping, accessible for test gauge connection, MUST be installed immediately upstream of gas supply connection to furnace and downstream of manual equipment shutoff valve.

**NOTE**: The furnace gas control valve inlet pressure tap connection is suitable to use as test gauge connection providing test pressure DOES NOT exceed maximum 0.5 psig (14-In. W.C.) stated on gas control valve. (See Fig. 32)

Install a sediment trap in riser leading to furnace as shown in Fig. 18. Connect a capped nipple into lower end of tee. Capped nipple should extend below level of furnace gas controls. Place a ground joint union between furnace gas control valve and exterior manual equipment gas shutoff valve. A 1/8-in. (3 mm) NPT plugged tapping, accessible for test gauge connection, MUST be installed immediately upstream of gas supply connection to furnace and downstream of manual equipment shutoff valve.

**Table 5 – Air Delivery - CFM (With Filter)**

| Furnace | Wire Lead Color[2] | Function | Test Airflow Delivery @ Various External Static Pressures | | | | | | | | | |
|---|---|---|---|---|---|---|---|---|---|---|---|---|
| | | | External Static Pressure (IN. W.C.) | | | | | | | | | |
| | | | **0.1** | **0.2** | **0.3** | **0.4** | **0.5** | **0.6** | **0.7** | **0.8** | **0.9** | **1.0** |
| 036040E17 | **Gray** | Cooling. Do not use for heating. | 1535 | 1495 | 1455 | 1415 | 1370 | 1320 | 1280 | 1235 | 1190 | 1145 |
| | **Yellow** | Alt Cooling or alt Heating | 1100 | 1055 | 1005 | 955 | 905 | 855 | 800 | 740 | 680 | 625 |
| | **Orange** | Heating or alt cooling | 695 | 645 | 585 | 510 | 450 | 390 | 325 | 270 | 215 | 155 |
| | **Blue** | Alt Cooling or alt Heating | 935 | 885 | 830 | 775 | 720 | 655 | 595 | 540 | 490 | 430 |
| | **Red** | Alt Cooling or alt Heating | 570 | 455 | 380 | 310 | 250 | 180 | 110 | – | – | – |
| | | | **0.1** | **0.2** | **0.3** | **0.4** | **0.5** | **0.6** | **0.7** | **0.8** | **0.9** | **1.0** |
| 048060E17 | **Gray** | Cooling. Do not use for heating. | 1720 | 1680 | 1635 | 1585 | 1545 | 1505 | 1455 | 1405 | 1355 | 1305 |
| | **Yellow** | Alt Cooling or alt Heating | 1470 | 1425 | 1385 | 1335 | 1290 | 1245 | 1200 | 1160 | 1110 | 1060 |
| | **Orange** | Alt Cooling or alt Heating | 1305 | 1255 | 1215 | 1160 | 1115 | 1070 | 1025 | 975 | 925 | 870 |
| | **Blue** | Heating or alt cooling | 1040 | 940 | 890 | 835 | 790 | 740 | 675 | 620 | 565 | 525 |
| | **Red** | Alt Cooling or alt Heating | 1135 | 1090 | 1035 | 985 | 940 | 895 | 845 | 790 | 730 | 675 |
| | | | **0.1** | **0.2** | **0.3** | **0.4** | **0.5** | **0.6** | **0.7** | **0.8** | **0.9** | **1.0** |
| 060080E21 | **Gray** | Cooling. Do not use for heating. | 2185 | 2135 | 2085 | 2035 | 1990 | 1935 | 1880 | 1825 | 1770 | 1715 |
| | **Yellow** | Alt Cooling or alt Heating | 1885 | 1830 | 1780 | 1730 | 1675 | 1625 | 1575 | 1520 | 1470 | 1420 |
| | **Orange** | Alt Cooling or alt Heating | 1565 | 1500 | 1440 | 1385 | 1330 | 1275 | 1220 | 1170 | 1115 | 1055 |
| | **Blue** | Heating or alt cooling | 1365 | 1295 | 1230 | 1165 | 1100 | 1045 | 985 | 925 | 845 | 780 |
| | **Red** | Alt Heating or alt cooling | 1205 | 1045 | 965 | 895 | 815 | 745 | 650 | 595 | 540 | 480 |
| | | | **0.1** | **0.2** | **0.3** | **0.4** | **0.5** | **0.6** | **0.7** | **0.8** | **0.9** | **1.0** |
| 060100E21 | **Gray** | Cooling. Do not use for heating. | 2230 | 2180 | 2120 | 2060 | 2005 | 1945 | 1880 | 1815 | 1755 | 1700 |
| | **Blue** | Heating or alt cooling | 1945 | 1885 | 1830 | 1770 | 1715 | 1650 | 1585 | 1525 | 1465 | 1405 |
| | **Yellow** | Alt Cooling or alt Heating | 1835 | 1775 | 1720 | 1655 | 1595 | 1530 | 1470 | 1410 | 1350 | 1285 |
| | **Orange** | Alt cooling or alt Heating | 1535 | 1470 | 1395 | 1325 | 1265 | 1205 | 1140 | 1080 | 1015 | 955 |
| | **Red** | Alt cooling. Do not use for heating | 1095 | 1060 | 1020 | 985 | 950 | 915 | 880 | 845 | 805 | 770 |

1. A filter is required for each return–air inlet. Airflow performance included 3/4–in. (19 mm) washable filter media such as contained in factory–authorized accessory filter rack. To determine airflow performance without this filter, assume an additional 0.1–in. W.C. available external static pressure.
2. **Adjust the blower speed tabs as necessary for the proper air temperature rise for each installation.**

– – Indicates unstable operating conditions

3. If the same motor speed tap is needed for heating and cooling, a Jumper Wire accessory kit is available (see Product Data for the current Jumper Wire accessory part number, see Function column for applicable limitations.

**Table 6 – Maximum Capacity of Pipe***

| NOMINAL IRON PIPE | INTERNAL DIAMETER | LENGTH OF PIPE – FT. (M) | | | | |
|---|---|---|---|---|---|---|
| SIZE IN. (mm) | In. (mm) | 10 | 20 | 30 | 40 | 50 |
| 1/2 (13) | 0.622 (16) | 175 (53) | 120 (37) | 97 (30) | 82 (25) | 73 (22) |
| 3/4 (19) | 0.824 (21) | 360 (110) | 250 (76) | 200 (61) | 170 (52) | 151 (46) |
| 1 (25) | 1.049 (27) | 680 (207) | 465 (142) | 375 (114) | 320 (98) | 285 (87) |
| 1–1/4 (32) | 1.380 (35) | 1400 (427) | 950 (290) | 770 (235) | 660 (201) | 580 (177) |
| 1–1/2 (38) | 1.610 (41) | 2100 (640) | 1460 (445) | 1180 (360) | 990 (301) | 900 (274) |

* Cubic ft. of natural gas per hr for gas pressures of 0.5 psig (14–In. W.C.) or less and a pressure drop of 0.5–In. W.C. (based on a 0.60 specific gravity gas). Ref: Chapter 6 current edition of ANSI Z223/NFPA 54.

Piping should be pressure and leak tested in accordance with NFGC in the United States, local, and national plumbing and gas codes before the furnace has been connected. After all connections have been made, purge lines and check for leakage at furnace prior to operating furnace.

If pressure exceeds 0.5 psig (14-In. W.C.), gas supply pipe must be disconnected from furnace and capped before and during supply pipe pressure test. If test pressure is equal to or less than 0.5 psig (14-In. W.C.), turn off electric shutoff switch located on furnace gas control valve and accessible manual equipment

shutoff valve before and during supply pipe pressure test. After all connections have been made, purge lines and check for leakage at furnace prior to operating furnace.

The gas supply pressure shall be within the maximum and minimum inlet supply pressures marked on the rating plate with the furnace burners ON and OFF.

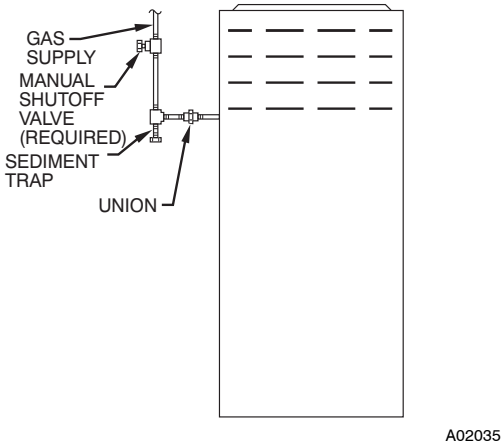


**Fig. 18 - Typical Gas Pipe Arrangement**

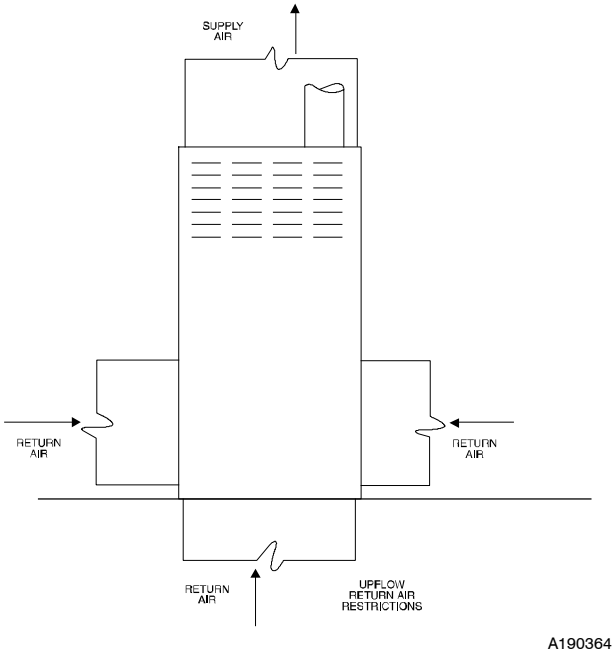


**Fig. 19 - Upflow Return Air Configurations and Restrictions**

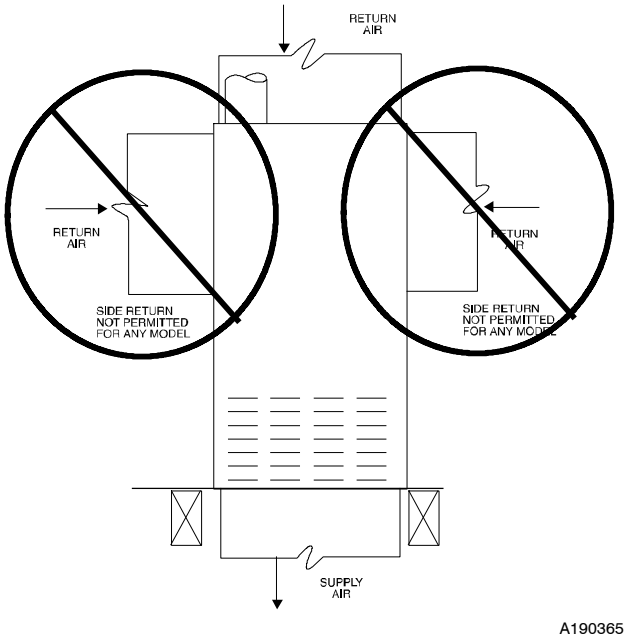


**Fig. 20 - Downflow Return Air Configurations and Restrictions**

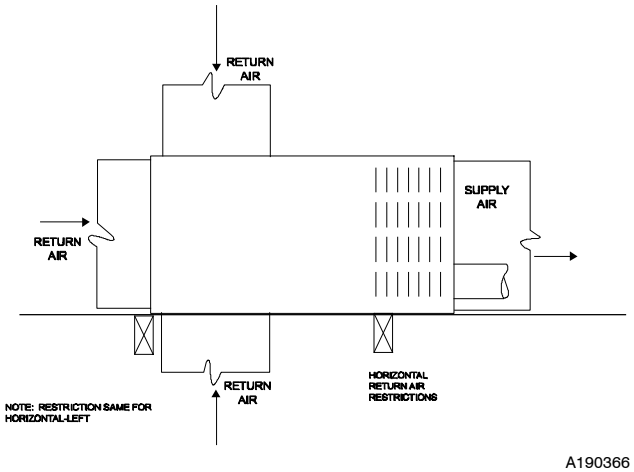


**Fig. 21 - Horizontal Return Air Configurations and Restrictions**

**Table 7 – Electrical Data**

| Unit Size | Volts-Hertz-Phase | Operating Voltage* Range | | Maximum Unit Amps | Unit Ampacity# | Minimum Wire Size AWG | Maximum Wire Length‡ ft (m) | Maximum Fuse or CKT BKR† Amps |
|---|---|---|---|---|---|---|---|---|
| | | Maximum | Minimum | | | | | |
| 36040B | 115-60-1 | 127 | 104 | 10.6 | 13.9 | 14 | 26 (8) | 15 |
| 48060B | 115-60-1 | 127 | 104 | 10.6 | 13.9 | 14 | 26 (8) | 15 |
| 60080C | 115-60-1 | 127 | 104 | 13.3 | 17.3 | 12 | 33 (10) | 20 |
| 60100C | 115-60-1 | 127 | 104 | 13.3 | 17.3 | 12 | 33 (10) | 20 |

* Permissible limits of the voltage range at which the unit operates satisfactorily.

# Unit ampacity = 125 percent of largest operating component's full load amps plus 100 percent of all other potential operating components' (EAC, humidifier, etc.) full load amps.

† Time–delay type is recommended.

‡ Length shown is as measured one way along wire path between unit and service panel for maximum 2 percent voltage drop.

## ELECTRICAL CONNECTIONS

**⚠ WARNING**

**ELECTRICAL SHOCK, FIRE OR EXPLOSION HAZARD**

Failure to follow safety warnings could result in dangerous operation, serious injury, death or property damage.

Improper servicing could result in dangerous operation, serious injury, death or property damage.

- Before servicing, disconnect all electrical power to furnace.
- When servicing controls, label all wires prior to disconnecting. Reconnect wires correctly.
- Verify proper operation after servicing.

**⚠ WARNING**

**ELECTRICAL SHOCK HAZARD**

Failure to follow this warning could result in personal injury or death.

Blower access panel door switch opens 115-v power to control. No component operation can occur. Do not bypass or close switch with panel removed.

See Fig. 24 for field wiring diagram showing typical field 115-v wiring. Check all factory and field electrical connections for tightness.

Field-supplied wiring shall conform with the limitations of 63°F (35°C) rise.

**⚠ WARNING**

**ELECTRICAL SHOCK AND FIRE HAZARD**

Failure to follow this warning could result in personal injury, death, or property damage.

The cabinet MUST have an uninterrupted or unbroken ground according to current edition of NEC NFPA 70 or local codes to minimize personal injury if an electrical fault should occur. This may consist of electrical wire, conduit approved for electrical ground or a listed, grounded power cord (where permitted by local code) when installed in accordance with existing electrical codes. Refer to the power cord manufacturer's ratings for proper wire gauge. Do not use gas piping as an electrical ground.

**⚠ CAUTION**

**FURNACE MAY NOT OPERATE**

Failure to follow this caution may result in intermittent furnace operation.

Furnace control must be grounded for proper operation or else control will lock out. Control must remain grounded through green/yellow wire routed to gas valve and gas valve mounting bracket screw.

## 115-V WIRING

Verify that the voltage, frequency, and phase correspond to that specified on unit rating plate. Also, check to be sure that service provided by utility is sufficient to handle load imposed by this equipment. Refer to rating plate or Table 7 for equipment electrical specifications.

Make all electrical connections in accordance with current edition of National Electrical Code (NEC) NFPA 70 and any local codes or ordinances that might apply.

**⚠ WARNING**

**FIRE HAZARD**

Failure to follow this warning could result in personal injury, death, or property damage.

Do not connect aluminum wire between disconnect switch and furnace. Use only copper wire.

Use a separate, fused branch electrical circuit with a properly sized fuse or circuit breaker for this furnace. See Table 7 for wire size and fuse specifications. A readily accessible means of electrical disconnect must be located within sight of the furnace.

**NOTE**: Proper polarity must be maintained for 115-v wiring. If polarity is incorrect, control LED status indicator light will flash rapidly and furnace will NOT operate.

## J-BOX RELOCATION

**NOTE**: If factory location of J-Box is acceptable, go to next section (ELECTRICAL CONNECTION TO J-BOX).

1. Remove and save two screws holding J-Box.

**NOTE**: The J-Box cover need not be removed from the J-Box in order to move the J-Box. Do NOT remove green ground screw inside J-Box.

2. Cut wire tie on loop in furnace wires attached to J-box.
3. Move J-Box to desired location.
4. Fasten J-Box to casing with two screws removed in Step 1.
5. Route J-Box wires within furnace away from sharp edges, rotating parts and hot surfaces.

## ELECTRICAL CONNECTION TO J-BOX

**Electrical Box on Furnace Casing Side**

**⚠ WARNING**

**FIRE OR ELECTRICAL SHOCK HAZARD**

Failure to follow this warning could result in personal injury, death, or property damage.

If field-supplied manual disconnect switch is to be mounted on furnace casing side, select a location where a drill or fastener cannot damage electrical or gas components.

1. Select and remove a hole knockout in the casing where the electrical box is to be installed.

**NOTE**: Check that duct on side of furnace will not interfere with installed electrical box.

2. Remove the desired electrical box hole knockout and position the hole in the electrical box over the hole in the furnace casing.
3. Fasten the electrical box to casing by driving two field supplied screws from inside electrical box into casing steel.
4. Remove and save two screws holding J-Box.
5. Pull furnace power wires out of 1/2-in. (12 mm) diameter hole in J-Box. Do not loosen wires from strain-relief wire-tie on outside of J-Box.
6. Route furnace power wires through holes in casing and electrical box and into electrical box (see Fig. 22)
7. Pull field power wires into electrical box.
8. Remove cover from furnace J-Box.
9. Route field ground wire through holes in electrical box and casing, and into furnace J-Box.
10. Reattach furnace J-Box to furnace casing with screws removed in Step 4.
11. Secure field ground wire to J-Box green ground screw.

12. Complete electrical box wiring and installation. Connect line voltage leads as shown in Fig. 24. Use best practices (NEC in U.S. for wire bushings, strain relief, etc.)
13. Reinstall cover to J-Box. Do not pinch wires between cover and bracket.

**POWER CORD INSTALLATION IN FURNACE J-BOX**

**NOTE**: Power cords must be able to handle the electrical requirements listed in Table 7. Refer to power cord manufacturer's listings.

1. Remove cover from J-Box.
2. Route listed power cord through 7/8-in. (22 mm) diameter hole in J-Box.
3. Secure power cord to J-Box bracket with a strain relief bushing or a connector approved for the type of cord used.
4. Secure field ground wire to green ground screw on J-Box bracket.
5. Connect line voltage leads as shown in Fig. 24.
6. Reinstall cover to J-Box. Do not pinch wires between cover and bracket.

**BX CABLE INSTALLATION IN FURNACE J-BOX**

1. Remove cover from J-Box.
2. Route BX cable into 7/8-inch diameter hole in J-Box.
3. Secure BX cable to J-Box bracket with connectors approved for the type of cable used.
4. Secure field ground wire to green ground screw on J-Box bracket.
5. Connect line voltage leads as shown in Fig. 24.
6. Reinstall cover to J-Box. Do not pinch wires between cover and bracket.

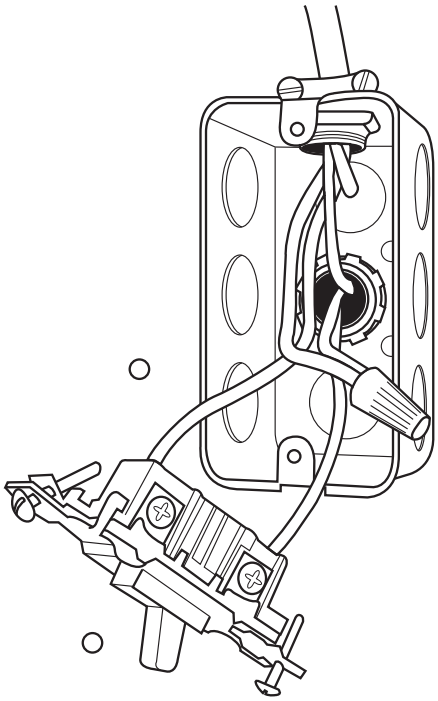

A10141

**Fig. 22 - Field-Supplied Electrical Box on Furnace Casing**

**24-V WIRING**

Make field 24-v connections at the 24-v terminal strip. (See Fig. 24) Connect terminal Y as shown in Fig. 38 for proper cooling operation. Use only AWG No. 18, color-coded, copper thermostat wire.

The 24-v circuit contains an automotive-type, 3-amp. fuse located on the control. Any direct shorts during installation, service, or maintenance could cause this fuse to blow. If fuse replacement is required, use ONLY a 3-amp. fuse of identical size.

**ACCESSORIES**

1. Electronic Air Cleaner (EAC)
   Connect an accessory Electronic Air Cleaner (if used) using 1/4-in female quick connect terminals to the two male 1/4-in quick-connect terminals on the control board marked EAC and NEUTRAL. The terminals are rated for 115 VAC, 1.0 amps maximum and are energized during blower motor operation. (See Fig. 23)
2. Humidifier (HUM 115 VAC)
   Connect an accessory 115 VAC, 1 amp. maximum humidifier (if used) to the 1/4-in male quick-connect HUM terminal and NEUTRAL 1/4-in quick connect. The HUM terminal is energized when the blower starts during a call for heat. (See Fig. 23)
3. Humidifier (HUM 24 VAC)
   Connect an accessory 24 VAC, 0.5 amp. maximum humidifier (if used) to the 1/4-in male quick-connect HUM 24 VAC terminal and COM-24V screw terminal on the control board thermostat strip. The HUM 24 VAC terminal is energized when the blower starts during a call for heat. (See Fig. 23)

**NOTE**: DO NOT connect furnace control HUM terminal to HUM (humidifier) terminal on humidity sensing thermostat, zone controller or similar device. See humidity sensing thermostat, zone controller, thermostat, or controller manufacturer's instructions for proper connection.

**NOTE**: DO NOT connect furnace control HUM 115 VAC terminal or HUM 24 VAC terminal to H (humidifier) terminal on humidity sensing thermostat, or similar device. See humidity sensing thermostat, thermostat, or controller manufacturer's instructions for proper connection.

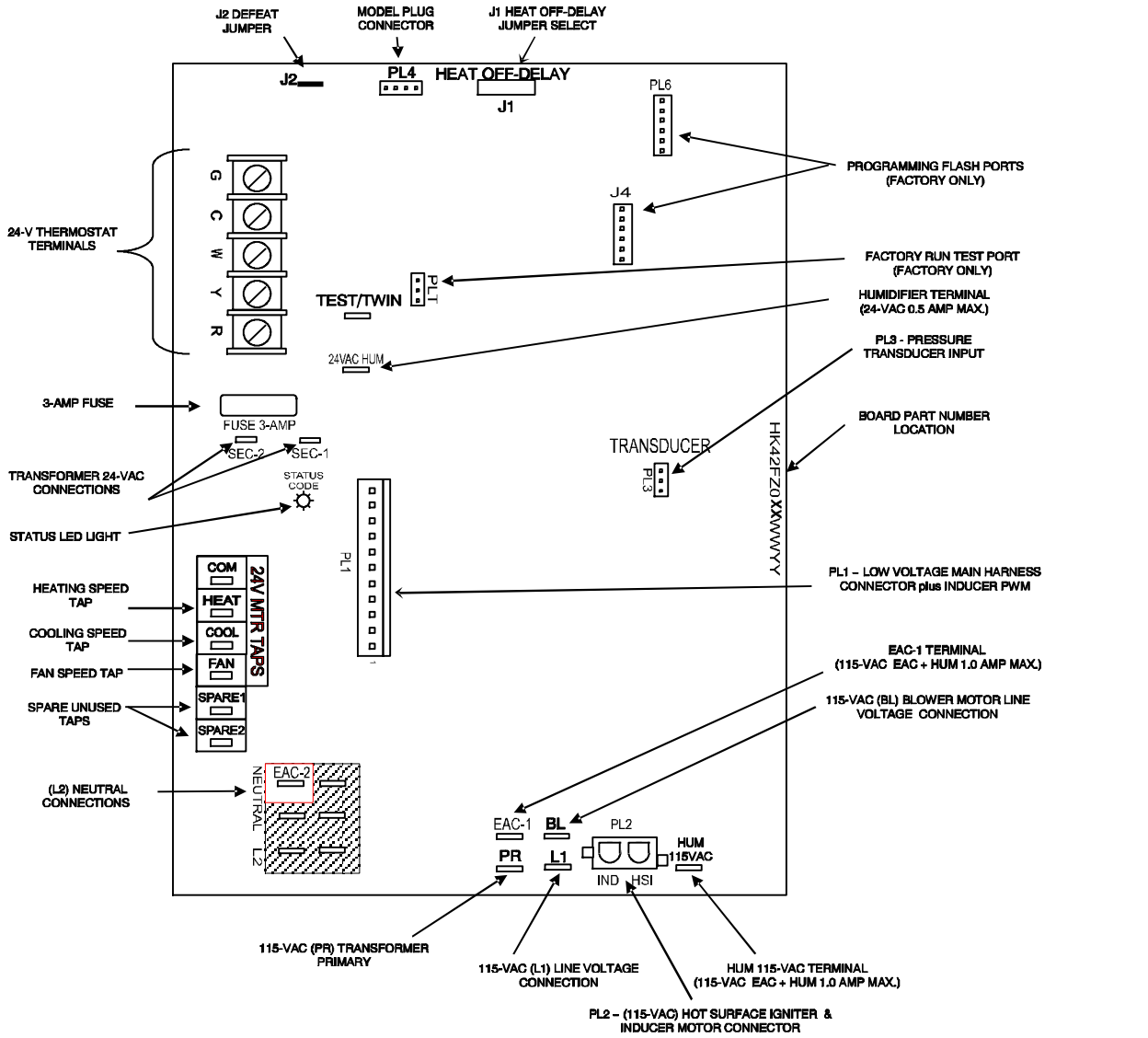


**Fig. 23 - Furnace Control**

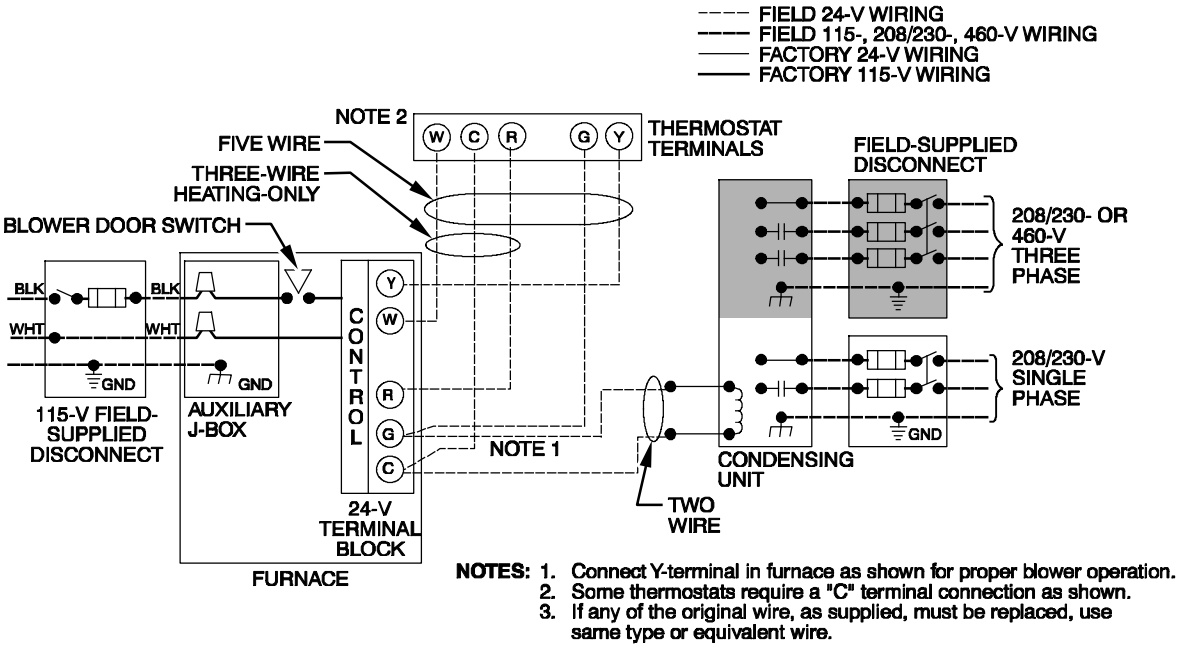


**Fig. 24 - Heating and Cooling Application Wiring Diagram with 1-Stage Thermostat**

## VENTING

The furnace shall be connected to a listed factory built chimney or vent, or a clay-tile lined masonry or concrete chimney. Venting into an unlined masonry chimney or concrete chimney is prohibited.

When an existing Category I furnace is removed or replaced, the original venting system may no longer be sized to properly vent the attached appliances. An improperly sized Category I venting system could cause the formation of condensate in the furnace and vent, leakage of condensate and combustion products, and spillage of combustion products into the living space.

**⚠ WARNING**

**CARBON MONOXIDE POISONING HAZARD**

Failure to follow the steps outlined below for each appliance connected to the venting system being placed into operation could result in carbon monoxide poisoning or death. The following steps shall be followed for each appliance connected to the venting system being placed into operation, while all other appliances connected to the venting system are not in operation:

1. Seal any unused openings in venting system.
2. Inspect the venting system for proper size and horizontal pitch, as required in the current edition of National Fuel Gas Code, ANSI Z223.1/NFPA 54 and these instructions. Determine that there is no blockage or restriction, leakage, corrosion and other deficiencies, which could cause an unsafe condition.
3. As far as practical, close all building doors and windows and all doors between the space in which the appliance(s) connected to the venting system are located and other spaces of the building.
4. Close fireplace dampers.
5. Turn on clothes dryers and any appliance not connected to the venting system. Turn on any exhaust fans, such as range hoods and bathroom exhausts, so they are operating at maximum speed. Do not operate a summer exhaust fan.
6. Follow the lighting instructions. Place the appliance being inspected into operation. Adjust the thermostat so appliance is operating continuously.
7. Test for spillage from draft hood equipped appliances at the draft hood relief opening after 5 minutes of main burner operation. Use the flame of a match or candle.
8. If improper venting is observed during any of the above tests, the venting system must be corrected in accordance with the current edition of National Fuel Gas Code, ANSI Z223.1/NFPA 54.
9. After it has been determined that each appliance connected to the venting system properly vents when tested as outlined above, return doors, windows, exhaust fans, fireplace dampers and any other gas-fired burning appliance to their previous conditions of use.

Vent system or vent connectors may need to be resized. Vent systems or vent connectors, must be sized to approach minimum size as determined using appropriate table found in the NFGC.

## GENERAL VENTING REQUIREMENTS

Follow all safety codes for proper vent sizing and installation requirements, including local building codes, the current edition of National Fuel Gas Code ANSI Z223.1/NFPA 54 (NFGC), Parts 12 and 13, the local building codes, and furnace and vent manufacturers' instructions.

These furnaces are design-certified as Category I furnaces in accordance with current edition of ANSI Z21.47/CSA 2.3 and operate with a non-positive vent static pressure to minimize the potential for vent gas leakage. Category I furnaces operate with a flue loss not less than 17 percent to minimize the potential for condensation in the venting system. These furnaces are approved for common venting and multistory venting with other fan assisted or draft hood equipped appliances in accordance with the NFGC, the local building codes, and furnace and vent manufacturers' instructions. The following information and warning must be considered in addition to the requirements defined in the NFGC.

1. If a vent (common or dedicated) becomes blocked, the furnace will be shut off by the draft safeguard switch located on the vent elbow.
2. Do not vent this Category I furnace into a single-wall dedicated or common vent. The dedicated or common vent is considered to be the vertical portion of the vent system that terminates outdoors.
3. Vent connectors serving Category I furnaces shall not be connected into any portion of a mechanical draft system operating under positive pressure.
4. Do not vent this appliance with any solid fuel burning appliance.
5. Category I furnaces must be vented vertically or nearly vertically unless equipped with a listed power venter.
6. Do not vent this appliance into an unlined masonry chimney. Refer to Chimney Inspection Chart, Fig. 25.

## MASONRY CHIMNEY REQUIREMENTS

If a clay tile-lined masonry chimney is being used and it is exposed to the outdoors below the roof line, relining might be required. Chimneys shall conform to the Standard for Chimneys, Fireplaces, Vents, and Solid Fuel Burning Appliances current edition of ANSI/NFPA 211 and must be in good condition.

USA - Refer to Sections 13.1.8 and 13.2.20 of the current edition of NFGC NFPA54/ANSI Z223.1 or the authority having jurisdiction to determine whether relining is required. If relining is required, use a properly sized listed metal liner, Type-B vent, or a listed alternative venting design.

**NOTE**: See the current edition of NFPA54/ANSI Z223.1, 13.1.8 and 13.2.20 regarding alternative venting design and the Exception.

This furnace is permitted to be vented into a clay tile-lined masonry chimney that is exposed to the outdoors below the roof line, provided:

1. Vent connector is Type-B double-wall, and
2. This furnace is common vented with at least 1 draft hood equipped appliance, and
3. The combined appliance input rating is less than the maximum capacity given in Table 8, and
4. The input rating of each space heating appliance is greater than the minimum input rating given in Table 9 for the local 99% Winter Design Temperature. Chimneys having internal areas greater than 38 square inches require furnace input ratings greater than the input ratings of these furnaces. See footnote at bottom of Table 9, and
5. The authority having jurisdiction approves.

If all of these conditions cannot be met, an alternative venting design shall be used, a listed chimney-lining system, or a Type-B common vent.

Inspections before the sale and at the time of installation will determine the acceptability of the chimney or the need for repair and/or (re)lining. Refer to the Fig. 25 to perform a chimney inspection. If the inspection of a previously used tile-lined chimney:

a. Shows signs of vent gas condensation, the chimney should be relined in accordance with local codes and the authority having jurisdiction. The chimney should be relined with a listed metal liner, or a Type-B vent shall be

used to reduce condensation. If a condensate drain is required by local code, refer to the current edition of NFGC NFPA54/ANSI Z223.1, Section 12.10 for additional information on condensate drains.

b. Indicates the chimney exceeds the maximum permissible size in the tables, the chimney should be rebuilt or relined to conform to the requirements of the equipment being installed and the authority having jurisdiction.

A chimney without a clay tile liner, which is otherwise in good condition, shall be rebuilt to conform to current edition of ANSI/NFPA 211 or be lined with a UL listed metal liner or UL listed Type-B vent. Relining with a listed metal liner or Type-B vent is considered to be a vent-in-a-chase.

If a metal liner or Type-B vent is used to line a chimney, no other appliance shall be vented into the annular space between the chimney and the metal liner.

**Exterior Masonry Chimney FAN + NAT Installations with Type-B Double Wall Vent Connectors ©NFPA & AGA**

**Table 8 – Combined Appliance Maximum Input Rating in Thousands of BTUH per Hour**

| VENT HEIGHT FT. (M) | INTERNAL AREA OF CHIMNEY IN$^2$ (MM$^2$) | | | |
|---|---|---|---|---|
| | 12 (7741) | 19 (12258) | 28 (18064) | 38 (24516) |
| 6 (1.8) | 74 | 119 | 178 | 257 |
| 8 (2.4) | 80 | 130 | 193 | 279 |
| 10 (3.0) | 84 | 138 | 207 | 299 |
| 15 (4.5) | NR | 152 | 233 | 334 |
| 20 (6.0) | NR | NR | 250 | 368 |
| 30 (9.1) | NR | NR | NR | 404 |

**Table 9 – Minimum Allowable Input Rating of Space-Heating Appliance in Thousands of BTUH per Hour**

| VENT HEIGHT FT (M) | INTERNAL AREA OF CHIMNEY IN$^2$. (MM$^2$) | | | |
|---|---|---|---|---|
| | **12 (7741)** | **19 (12258)** | **28 (18064)** | **38 (24516)** |
| **Local 99% Winter Design Temperature: 17 to 26°F* (−8 to −3°C)** | | | | |
| 6 (1.8) | 0 | 55 | 99 | 141 |
| 8 (2.4) | 52 | 74 | 111 | 154 |
| 10 (3.0) | NR | 90 | 125 | 169 |
| 15 (4.6) | NR | NR | 167 | 212 |
| 20 (6.1) | NR | NR | 212 | 258 |
| 30 (9.1) | NR | NR | NR | 362 |
| **Local 99% Winter Design Temperature: 5 to 16°F* (−15 to −9°C)** | | | | |
| 6 (1.8) | NR | 78 | 121 | 166 |
| 8 (2.4) | NR | 94 | 135 | 182 |
| 10 (3.0) | NR | 111 | 149 | 198 |
| 15 (4.6) | NR | NR | 193 | 247 |
| 20 (6.1) | NR | NR | NR | 293 |
| 30 (9.1) | NR | NR | NR | 377 |
| **Local 99% Winter Design Temperature: −10 to 4°F* (−23 to −16°C)** | | | | |
| 6 (1.8) | NR | NR | 145 | 196 |
| 8 (2.4) | NR | NR | 159 | 213 |
| 10 (3.0) | NR | NR | 175 | 231 |
| 15 (4.6) | NR | NR | NR | 283 |
| 20 (6.1) | NR | NR | NR | 333 |
| 30 (9.1) | NR | NR | NR | NR |
| **Local 99% Winter Design Temperature: −11°F (−24°C) or lower** | | | | |
| Not recommended for any vent configuration. | | | | |

*The 99.6% heating db temperatures table found in the Appendix of the Climatic Design Information chapter of the 2017 ASHRAE Fundamentals Handbook.

## APPLIANCE APPLICATION REQUIREMENTS

Appliance operation has a significant impact on the performance of the venting system. If the appliances are sized, installed, adjusted, and operated properly, the venting system and/or the appliances should not suffer from condensation and corrosion. The venting system and all appliances shall be installed in accordance with applicable listings, standards, and codes.

The furnace should be sized to provide 100 percent of the design heating load requirement plus any margin that occurs because of furnace model size capacity increments. Heating load estimates can be made using approved methods available from Air Conditioning Contractors of America (Manual J); American Society of Heating, Refrigerating, and Air-Conditioning Engineers; or other approved engineering methods. Excessive oversizing of the furnace could cause the furnace and/or vent to fail prematurely. When a metal vent or metal liner is used, the vent must be in good condition and be installed in accordance with the vent manufacturer's instructions.

To prevent condensation in the furnace and vent system, the following precautions must be observed:

1. The return-air temperature must be at least 60°F (16°C)db except for brief periods of time during warm-up from setback at no lower than 55°F (13°C) db or during initial start-up from a standby condition.
2. Adjust the gas input rate per the installation instructions. Low gas input rate causes low vent gas temperatures, causing condensation and corrosion in the furnace and/or venting system.
3. Adjust the air temperature rise to the midpoint of the rise range or slightly above. Low air temperature rise can cause low vent gas temperature and potential for condensation problems.
4. Set the thermostat heat anticipator or cycle rate to reduce short cycling.

Air for combustion must not be contaminated by halogen compounds which include chlorides, fluorides, bromides, and iodides. These compounds are found in many common home products such as detergent, paint, glue, aerosol spray, bleach, cleaning solvent, salt, and air freshener, and can cause corrosion of furnaces and vents. Avoid using such products in the combustion-air supply. Furnace use during construction of the building could cause the furnace to be exposed to halogen compounds, causing premature failure of the furnace or venting system due to corrosion.

Vent dampers on any appliance connected to the common vent can cause condensation and corrosion in the venting system. Do not use vent dampers on appliances common vented with this furnace.

# CHIMNEY INSPECTION CHART

For additional requirements refer to the National Fuel Gas Code NFPA 54/ANSI Z223.1 and ANSI/NFPA 211 Chimneys, Fireplaces, Vents, and Solid Fuel Burning Appliances

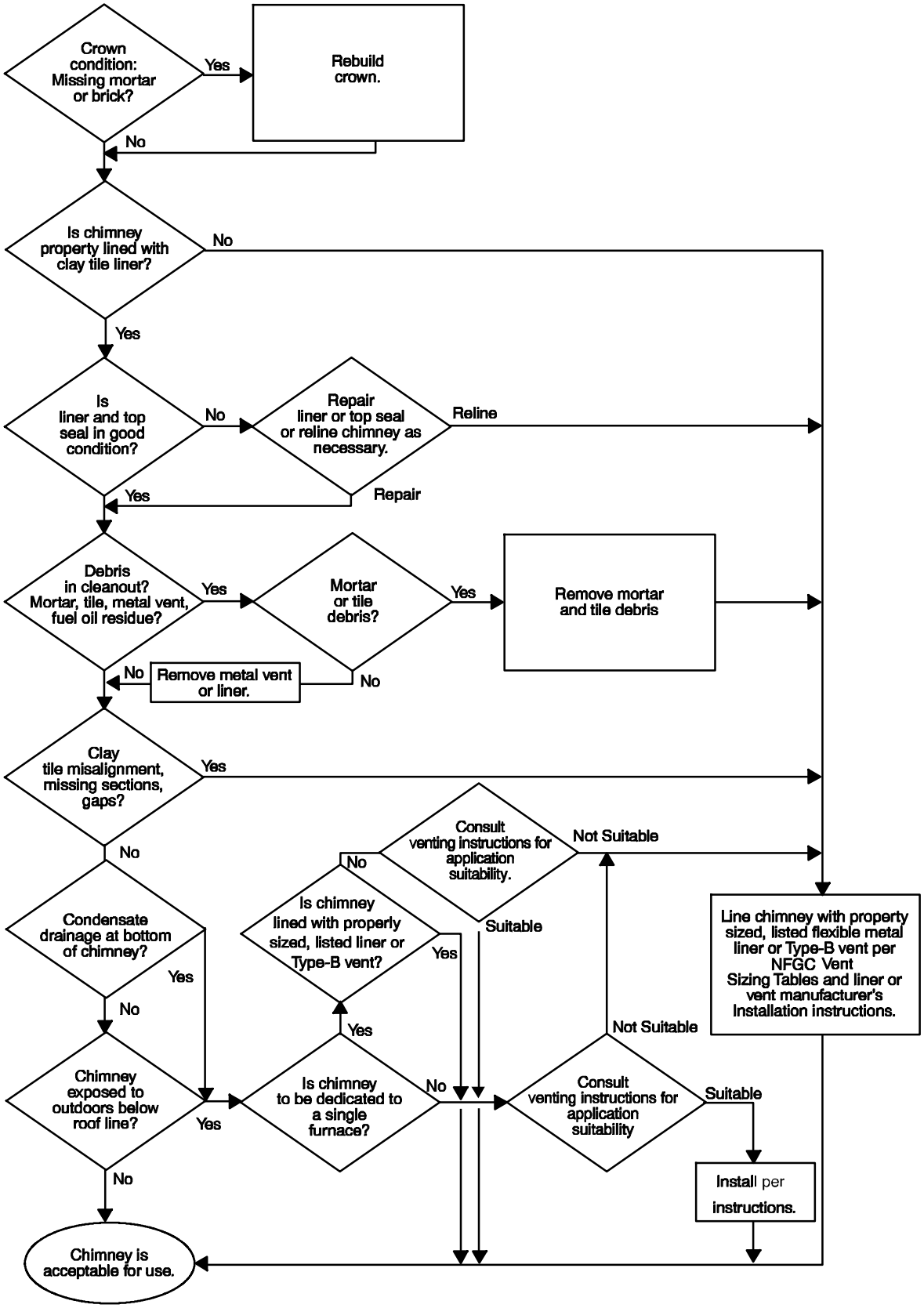


**Fig. 25 - Chimney Inspection Chart**

## ADDITIONAL VENTING REQUIREMENTS

A 4" (101 mm) round vent elbow is supplied with the furnace. A 5-inch (127 mm) or 6- inch (152 mm) vent connector may be required for some model furnaces. A field-supplied 4-inch-to-5-inch (101 - 127 mm) or 4-inch-to-6-inch (101 - 152 mm) sheet metal increaser fitting is required when 5-inch (127 mm) or 6-inch (152 mm) vent connector is used. See Fig. 26 - 31 Venting Orientation for approved vent configurations.

**NOTE**: Vent connector length for connector sizing starts at furnace vent elbow. The 4-inch vent elbow is shipped for upflow configuration and may be rotated for other positions. Remove the 3 screws that secure vent elbow to furnace, rotate furnace vent elbow to position desired, reinstall screws. The factory-supplied vent elbow does NOT count as part of the number of vent connector elbows.

The vent connector can exit the furnace through one of two locations on the casing.

1. Attach the single wall vent connector to the furnace vent elbow, and fasten the vent connector to the vent elbow with at least two field-supplied, corrosion-resistant, sheet metal screws located 180° apart.

**NOTE**: An accessory flue extension is available to extend from the furnace elbow to outside the furnace casing. See Product Data for accessory listing. If flue extension is used, fasten the flue extension to the vent elbow with at least two field-supplied, corrosion-resistant, sheet metal screws located 180° apart. Fasten the vent connector to the flue extension with at least two field-supplied, corrosion resistant sheet metal screws located 180° apart.

2. Vent the furnace with the appropriate connector as shown in Fig. 26 - 31.
3. Determine the correct location of the knockout to be removed.
4. Use a hammer and screwdriver to strike a sharp blow between the tie points and work the slug back and forth until the slug breaks free.

**⚠ CAUTION**

**CUT HAZARD**

Failure to follow this caution may result in personal injury.

Sheet metal parts may have sharp edges or burrs. Use care and wear appropriate protective clothing, safety glasses and gloves when handling parts and servicing furnaces.

**⚠ CAUTION**

**BURN HAZARD**

Failure to follow this caution may cause personal injury.

Hot vent pipe is within reach of small children when installed in downflow position. See the following instruction.

An accessory Vent Guard Kit is REQUIRED for downflow applications where the vent exits through the lower portion of the furnace casing. See Fig. 30 and Product Data for accessory listing. Refer to the Vent Guard Kit Instructions for complete details.

The horizontal portion of the venting system shall slope upwards not less than 1/4-in. per linear ft. (21 mm/M) from the furnace to the vent and shall be rigidly supported every 5 ft. (2 M) or less with metal hangers or straps to ensure there is no movement after installation.

## SIDEWALL VENTING

This furnace is not approved for direct sidewall horizontal venting.

Per section 12.4.3 of the current edition of NFPA54/ANSI Z223.1, any listed mechanical venter may be used, when approved by the authority having jurisdiction.

Select the listed mechanical venter to match the Btuh input of the furnace being vented. Follow all manufacturer's installation requirements for venting and termination included with the listed mechanical venter.

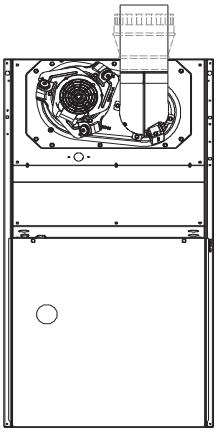

SEE NOTES: 1,2,4,7,8,9 on the page following these figures

A03208

**Fig. 26 - Upflow Application-Vent Elbow Up**

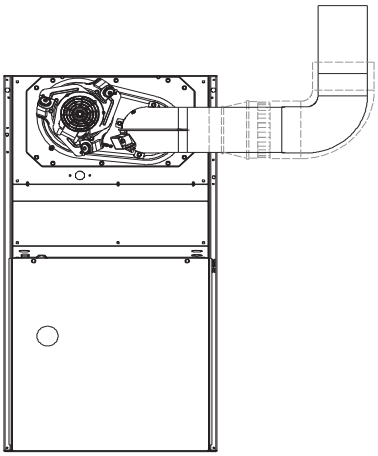

SEE NOTES: 1,2,3,4,7,8,9 on the pages following these figures

A03209

**Fig. 27 - Upflow Application-Vent Elbow Right**

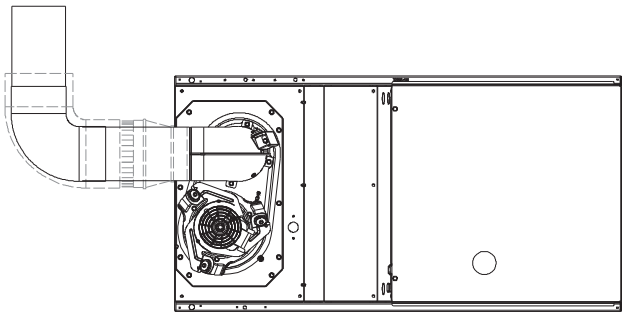

SEE NOTES: 1,2,4,7,8,9 on the page following these figures

A03213

**Fig. 28 - Horizontal Left Application-Vent Elbow Left**

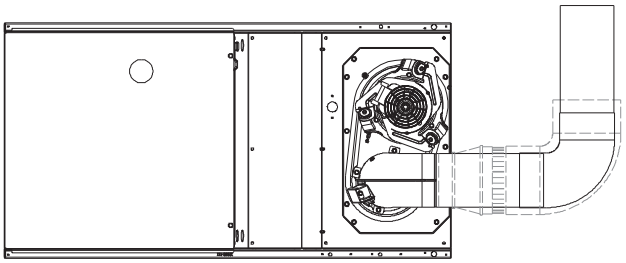

SEE NOTES: 1,2,4,7,8,9 on the page following these figures

A03214

**Fig. 29 - Horizontal Right Application-Vent Elbow Right**

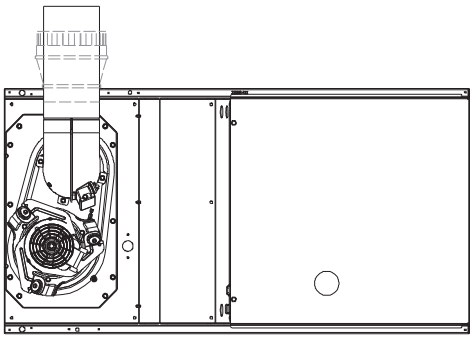

SEE NOTES: 1,2,4,5,7,8,9 on the page following these figures

A03215

**Fig. 31 - Horizontal Left Application-Vent Elbow Up**

See NOTES following images.

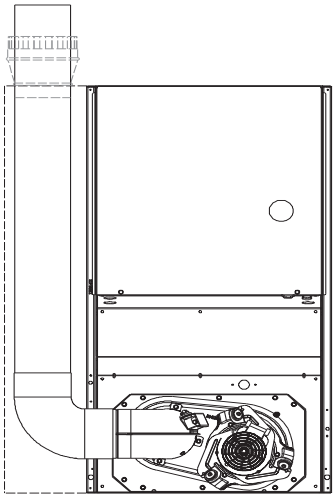

SEE NOTES: 1,2,4,5,6,7,8,9 on the page following these figures

A03207

**Fig. 30 - Downflow Application-Vent Elbow Left then Up**

## VENTING NOTES FOR FIGURES 26 - 31

1. For common vent, vent connector sizing and vent material: United States--use the NFGC.
2. Immediately increase to 5-inch (127 mm) or 6-inch (152 mm) vent connector outside furnace casing when 5-inch (127 mm) vent connector is required, refer to Note 1 above.
3. Side outlet vent for upflow and downflow installations must use Type B vent immediately after exiting the furnace, except when factory-authorized, Downflow Vent Guard Kit, is used in the downflow position. See Product Data Sheet for accessory listing.
4. Type-B vent where required, refer to Note 1 above.
5. Four-inch single-wall (26 ga. min.) vent must be used inside furnace casing and when the Downflow Vent Guard Kit is used external to the furnace. See Product Data Sheet for accessory listing.
6. Factory-authorized accessory Downflow Vent Guard Kit required in downflow installations with lower vent configuration. See Product Data Sheet for accessory listing.
7. Secure vent connector to furnace elbow with (2) corrosion-resistant sheet metal screws, spaced approximately 180° apart.
8. Secure all other single wall vent connector joints with (3) corrosion resistant screws spaced approximately 120° apart.
9. Secure Type-B vent connectors per vent connector manufacturer's recommendations.

## START-UP, ADJUSTMENT, AND SAFETY CHECK

### General

**⚠ WARNING**

**FIRE HAZARD**

Failure to follow this warning could result in personal injury, death and/or property damage.

This furnace is equipped with manual reset limit switches in the gas control area. The switches open and shut off power to the gas valve if a flame rollout or overheating condition occurs in the gas control area. DO NOT bypass the switches. Correct inadequate combustion air supply problem before resetting the switches.

**⚠ CAUTION**

**CUT HAZARD**

Failure to follow this caution may result in personal injury.

Sheet metal parts may have sharp edges or burrs. Use care and wear appropriate protective clothing, safety glasses and gloves when handling parts and servicing furnaces.

1. Maintain 115-v wiring and ground. Improper polarity will result in rapidly LED flashing and no furnace operation.
2. Make thermostat wire connections at the 24-v terminal block on the furnace control. Failure to make proper connections will result in improper operation. (See Fig. 24)

3. Gas supply pressure to the furnace must be greater than 4.5-In. W.C. (0.16 psig ) but not exceed 14-In. W.C. (0.5 psig).
4. Check all manual-reset switches for continuity.
5. Install blower compartment door. Door must be in place to operate furnace.
6. Replace outer door.

**Start-Up Procedures**

**⚠ WARNING**

**FIRE AND EXPLOSION HAZARD**

Failure to follow this warning could cause personal injury, death and/or property damage.

Never test for gas leaks with an open flame. Use a commercially available soap solution made specifically for the detection of leaks to check all connections. A fire or explosion may result causing property damage, personal injury or loss of life.

1. Purge gas lines after all connections have been made.
2. Check gas lines for leaks.
3. Verify furnace shut down by lowering thermostat setting below room temperature.
4. Verify furnace restarts by raising thermostat setting above room temperature.

**Adjustments**

**⚠ WARNING**

**FIRE HAZARD**

Failure to follow this warning could result in injury, death and/or property damage.

DO NOT bottom out gas valve regulator adjusting screw. This can result in unregulated gas valve outlet pressure and result in excess overfire and heat exchanger failures.

**⚠ CAUTION**

**FURNACE DAMAGE HAZARD**

Failure to follow this caution may result in reduced furnace life.

DO NOT redrill orifices. Improper drilling (burrs, out-of-round holes, etc.) can cause excessive burner noise and misdirection of inlet gas. (See Fig. 33)

Furnace gas input rate on rating plate is for installations at altitudes up to 2,000 ft. (610 M). Furnace input rate must be within +/-2 percent of furnace rating plate input.

1. Determine the correct gas input rate. Refer to the unit rating plate. The input rating for altitudes above 2,000 ft. (610 M) must be reduced by 2 percent for each 1,000 ft. (305 M) above sea level. For installations below 2,000 ft. (610 M), refer to the unit rating plate. For installation above 2,000 ft. (610 M), multiply the input on the rating plate by the derate multiplier in Table 10 for the correct input rate.
2. Determine the correct outlet gas pressure adjustment.
   a. Obtain average yearly gas heat value (at installed altitude) from local gas supplier.

**Table 10 – Altitude Derate Multiplier for U.S.A.**

| ALTITUDE (FT. / M) | PERCENT OF DERATE | DERATE MULTIPLIER FACTOR* |
|---|---|---|
| 0–2000 (0–610) | 0 | 1.00 |
| 2001–3000 (610–914) | 4–6 | 0.95 |
| 3001–4000 (914–1219) | 6–8 | 0.93 |
| 4001–5000 (1219–1524) | 8–10 | 0.91 |
| 5001–5400 (1525–1646) | 10–11 | 0.90 |

* Derate multiplier factors are based on midpoint altitude for altitude range.

   b. Obtain average yearly gas specific gravity from local gas supplier.
   c. Find closest natural gas heat value and specific gravity in Tables 12 through 15.
   d. Follow heat value and specific gravity lines to point of intersection to find outlet pressure setting for proper operation.
3. Check Inlet Gas Pressure

The inlet gas pressure must be checked with the furnace operating. This is necessary to make sure the inlet gas pressure does not fall below the minimum pressure of 4.5 in. w.c.

   a. Make sure the gas supply is turned off to the furnace and at the electric switch on the gas valve
   b. Loosen set screw on inlet tower pressure tap no more than one full turn with a 3/32- in. hex wrench or remove the 1/8- in. NPT plug from the inlet pressure tap on the gas valve.
   c. Connect a manometer to the inlet pressure tap on gas valve.
   d. Turn on furnace power supply.
   e. Turn gas supply manual shutoff valve to ON position.
   f. Turn furnace gas valve switch to ON position.
   g. Jumper R and W thermostat connections at the furnace control board.
   h. When main burners ignite, confirm inlet gas pressure is between 4.5 in. W.C. (1125 Pa) and 13.6 in. W.C. (3388 Pa).
   i. Remove jumper across thermostat connections to terminate call for heat. Wait until the blower off delay is completed.
   j. Turn furnace gas valve electric switch to OFF position.
   k. Turn gas supply manual shutoff valve to OFF position.
   l. Turn off furnace power supply.
   m. Remove manometer from the inlet pressure tap of the gas valve.
   n. Tighten set screw on inlet tower pressure tap with 3/32- in. hex wrench, or if 1/8- in. NPT plug was removed, apply pipe dope sparingly to end of plug and re- install in the gas valve

**⚠ WARNING**

**FIRE HAZARD**

Failure to follow this warning could result in personal injury, death, and/or property damage.

Inlet pressure tap set screw must be tightened and 1/8-in. NPT pipe plug must be installed to prevent gas leaks.

4. Adjust gas valve outlet pressure determined in Step 2. to obtain correct input rate.
   a. Turn gas valve ON/OFF switch to OFF.

b. Loosen set screw on outlet tower pressure tap no more than one full turn with a 3/32 in. hex wrench. (See Fig. 32)

c. Connect a water column manometer or similar device to pressure tap on the gas valve.

d. Turn gas valve ON/OFF switch to ON.

e. Manually close blower door switch.

f. Set thermostat to call for heat.

g. Remove regulator seal cap and turn regulator adjusting screw counterclockwise (out) to decrease input rate of clockwise (in) to increase input rate.

h. Install regulator seal cap.

i. Leave manometer or similar device connected and proceed to next step.

**NOTE**: If orifice hole appears damaged or it is suspected to have been redrilled, check orifice hole with a numbered drill bit of correct size. Never redrill an orifice. A burr-free and properly sized orifice hole is essential for proper flame characteristics.

5. Verify natural gas input rate by clocking meter.

**NOTE**: Gas valve regulator adjustment cap must be in place for proper input to be clocked.

a. Turn off all other gas appliances and pilots served by the meter.

b. Run furnace for 3 minutes in heating operation.

c. Measure time (in seconds) for gas meter to complete 1 revolution and note reading. The 2 or 5 cubic feet dial provides a more accurate measurement of gas flow.

d. Refer to Table 11 for cubic ft. of gas per hr.

e. Multiply gas rate (cu ft./hr) by heating value (Btuh/cu ft.) to obtain input.

If clocked rate does not match required input from Step 1, increase gas valve outlet pressure to increase input or decrease gas valve outlet pressure to decrease input. Repeat steps b through e until correct input is achieved. Reinstall regulator seal cap on gas valve.

6. Set temperature rise. The furnace must operate within the temperature rise ranges specified on the furnace rating plate. Do not exceed temperature rise range specified on unit rating plate. Determine the temperature rise as follows:

**NOTE**: Blower access door must be installed when taking temperature rise reading. Leaving blower access door off will result in incorrect temperature measurements.

**⚠ WARNING**

**ELECTRICAL SHOCK HAZARD**

Failure to follow this warning could result in personal injury or death.

Disconnect 115-v electrical power and install lockout tag before changing speed tap.

a. Place thermometers in return and supply ducts as close to furnace as possible. Be sure thermometers do not see radiant heat from heat exchangers. Radiant heat affects temperature rise readings. This practice is particularly important with straight-run ducts.

b. When thermometer readings stabilize, subtract return-air temperature from supply-air temperature to determine air temperature rise.

**NOTE**: If the temperature rise is outside this range, first check:

(1.) Gas input for heating operation.

(2.) Return and supply ducts for excessive restrictions causing static pressures greater than the maximum heating static listed on the rating plate.

c. Adjust air temperature rise by adjusting blower speed. Increase blower speed to reduce temperature rise. Decrease blower speed to increase temperature rise

d. Turn thermostat down below room temperature and remove blower access door.

e. To change motor speed selection for heating, remove blower motor lead from control HEAT terminal (See Wiring Diagram - Fig. 38) Select desired blower motor speed lead from one of the other terminals and relocate it to the HEAT terminal (See Table 5 for lead color identification). Reconnect original lead to SPARE terminal.

f. Repeat steps a through e.

g. When correct input rate and temperature rise is achieved, turn gas valve ON/OFF switch to OFF.

h. Remove manometer or similar device from gas valve.

i. Tighten set screw on outlet tower pressure tap with 3/32 in. hex wrench.

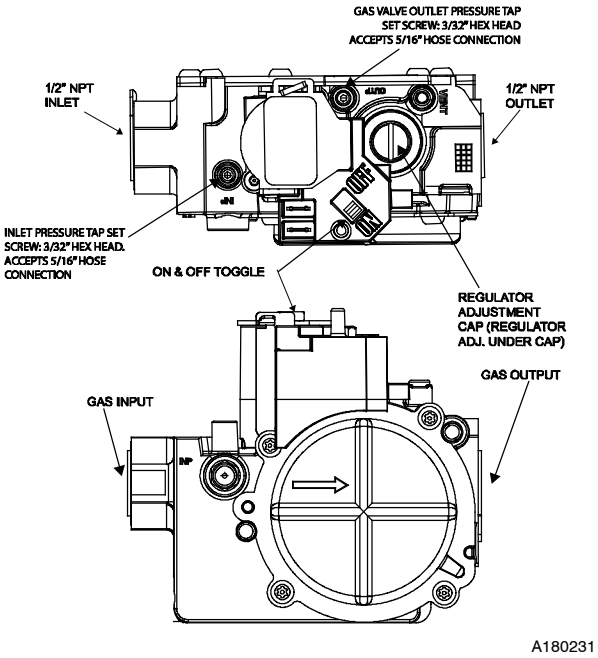


**Fig. 32 - Gas Control Valve**

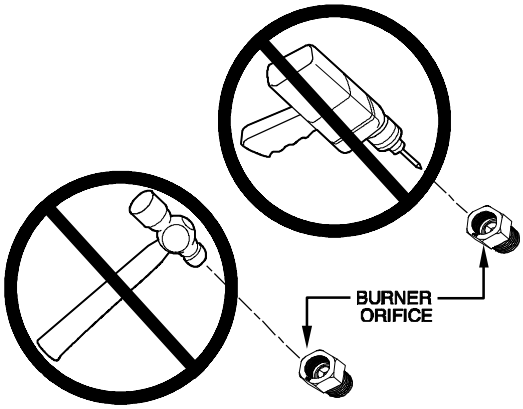


**Fig. 33 - Orifice Hole**

## ⚠ WARNING

**FIRE HAZARD**

Failure to follow this warning could result in personal injury, death, and/or property damage.

Gas valve outlet pressure tap must be tightened to prevent gas leak.

## ⚠ CAUTION

**FURNACE OVERHEATING HAZARD**

Failure to follow this caution may result in reduced furnace life.

Recheck temperature rise. It must be within limits specified on the rating plate. Recommended operation is at the mid-point of rise range or slightly above.

7. Set thermostat heat anticipator.
   a. Mechanical thermostat - Set thermostat heat anticipator to match the amp. draw of the electrical components in the R-W circuit. Accurate amp. draw readings can be obtained at the wires normally connected to thermostat subbase terminals, R and W. The thermostat anticipator should NOT be in the circuit while measuring current.
      (1.) Remove thermostat from subbase or from wall.
      (2.) Connect an amp. meter as shown in Fig. 34 across the R and W subbase terminals or R and W wires at wall.
      (3.) Record amp. draw across terminals when furnace is in heating and after blower starts.
      (4.) Set heat anticipator on thermostat per thermostat instructions and install on subbase or wall.
   b. Electronic thermostat: Set cycle rate for 4 cycles per hr.
8. Adjust blower off delay. The blower off delay has four (4) adjustable settings from 90 seconds to 180 seconds. The blower off delay jumpers are located on the furnace control board. (See wiring diagram Fig. 38) Position A-90 seconds, B-120 seconds, C-150 seconds, D-180 seconds. To change the blower off delay setting, move the jumper from one set of pins on the control to the pins used for the selected blower off delay. Factory off delay setting is 120 seconds.
9. Cooling On Delay is fixed at 2 seconds for either jumper selection.

**Check Safety Controls**

1. Check Main Limit Switch(es)
   This control shuts off combustion control system and energizes air-circulating blower motor, if furnace overheats. By using this method to check limit control, it can be established that limit is functioning properly and will operate if there is a restricted duct system or motor failure. If limit control does not function during this test, cause must be determined and corrected.
   a. Run furnace for at least 5 minutes.
   b. Gradually block off return air with a piece of cardboard or sheet metal until the limit trips.
   c. Unblock return air to permit normal circulation for 5 minutes.
   d. Reset unit power to clear limit fault lockout.

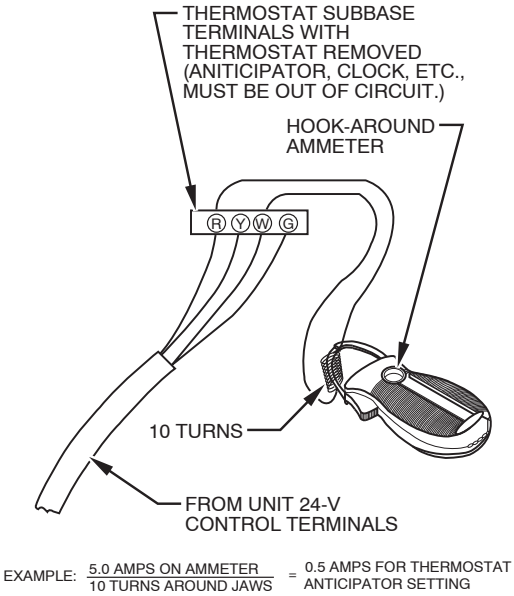


**Fig. 34 - Amp. Draw Check With Ammeter**

2. Check draft safeguard switch.
   The purpose of this control is to cause the safe shutdown of the furnace during certain blocked vent conditions.
   a. Verify vent pipe is cool to the touch.
   b. Disconnect power to furnace and remove vent connector from furnace vent elbow.
   c. Restore power to furnace and set room thermostat above room temperature.
   d. After normal start-up, allow furnace to operate for 2 minutes, then block vent elbow in furnace 80 percent of vent area with a piece of flat sheet metal.
   e. Furnace should cycle off within 2 minutes. If gas does not shut off within 2 minutes, determine reason draft safeguard switch did not function properly and correct condition.
   f. Remove blockage from furnace vent elbow.
   g. Switch will auto-reset when it cools.
   h. Re-install vent connector.
   i. Reset unit power to clear limit fault lockout.

**Checklist**

1. Put away tools and instruments. Clean up debris.
2. Verify blower off delay are set as desired. (See wiring diagram Fig. 38) Position A-90 seconds, B-120 seconds, C-150 seconds, D-180 seconds. Factory off delay setting is 120 seconds.
3. Cooling On Delay is fixed at 2 seconds for either jumper selection.
4. Verify that blower and burner access doors are properly installed.
5. Cycle test furnace with room thermostat.
6. Check operation of accessories per manufacturer's instructions.
7. Review User's Guide with owner.
8. Attach literature packet to furnace.

**Table 11 – Gas Rate (Cu Ft./Hr.)**

| SECONDS FOR 1 REVOLU-TION | SIZE OF TEST DIAL | | | SECONDS FOR 1 REVOLU-TION | SIZE OF TEST DIAL | | |
|---|---|---|---|---|---|---|---|
| | 1 Cu Ft. | 2 Cu Ft. | 5 Cu Ft. | | 1 Cu Ft. | 2 Cu Ft. | 5 Cu Ft. |
| 10 | 360 | 720 | 1800 | 50 | 72 | 144 | 360 |
| 11 | 327 | 655 | 1636 | 51 | 71 | 141 | 355 |
| 12 | 300 | 600 | 1500 | 52 | 69 | 138 | 346 |
| 13 | 277 | 555 | 1385 | 53 | 68 | 136 | 340 |
| 14 | 257 | 514 | 1286 | 54 | 67 | 133 | 333 |
| 15 | 240 | 480 | 1200 | 55 | 65 | 131 | 327 |
| 16 | 225 | 450 | 1125 | 56 | 64 | 129 | 321 |
| 17 | 212 | 424 | 1059 | 57 | 63 | 126 | 316 |
| 18 | 200 | 400 | 1000 | 58 | 62 | 124 | 310 |
| 19 | 189 | 379 | 947 | 59 | 61 | 122 | 305 |
| 20 | 180 | 360 | 900 | 60 | 60 | 120 | 300 |
| 21 | 171 | 343 | 857 | 62 | 58 | 116 | 290 |
| 22 | 164 | 327 | 818 | 64 | 56 | 112 | 281 |
| 23 | 157 | 313 | 783 | 66 | 54 | 109 | 273 |
| 24 | 150 | 300 | 750 | 68 | 53 | 106 | 265 |
| 25 | 144 | 288 | 720 | 70 | 51 | 103 | 257 |
| 26 | 138 | 277 | 692 | 72 | 50 | 100 | 250 |
| 27 | 133 | 267 | 667 | 74 | 48 | 97 | 243 |
| 28 | 129 | 257 | 643 | 76 | 47 | 95 | 237 |
| 29 | 124 | 248 | 621 | 78 | 46 | 92 | 231 |
| 30 | 120 | 240 | 600 | 80 | 45 | 90 | 225 |
| 31 | 116 | 232 | 581 | 82 | 44 | 88 | 220 |
| 32 | 113 | 225 | 563 | 84 | 43 | 86 | 214 |
| 33 | 109 | 218 | 545 | 86 | 42 | 84 | 209 |
| 34 | 106 | 212 | 529 | 88 | 41 | 82 | 205 |
| 35 | 103 | 206 | 514 | 90 | 40 | 80 | 200 |
| 36 | 100 | 200 | 500 | 92 | 39 | 78 | 196 |
| 37 | 97 | 195 | 486 | 94 | 38 | 76 | 192 |
| 38 | 95 | 189 | 474 | 96 | 38 | 75 | 188 |
| 39 | 92 | 185 | 462 | 98 | 37 | 74 | 184 |
| 40 | 90 | 180 | 450 | 100 | 36 | 72 | 180 |
| 41 | 88 | 176 | 439 | 102 | 35 | 71 | 178 |
| 42 | 86 | 172 | 429 | 104 | 35 | 69 | 173 |
| 43 | 84 | 167 | 419 | 106 | 34 | 68 | 170 |
| 44 | 82 | 164 | 409 | 108 | 33 | 67 | 167 |
| 45 | 80 | 160 | 400 | 110 | 33 | 65 | 164 |
| 46 | 78 | 157 | 391 | 112 | 32 | 64 | 161 |
| 47 | 76 | 153 | 383 | 116 | 31 | 62 | 155 |
| 48 | 75 | 150 | 375 | 120 | 30 | 60 | 150 |
| 49 | 73 | 147 | 367 | | | | |

**Table 12 – Gas Valve Outlet Pressure for Gas Heat Values at Altitude - 40,000**

| Tabulated Data Based on 40,000 BTUH Input for 0–ft (0 M) to 5400–ft (1646 M) above sea level | | | | | | |
|---|---|---|---|---|---|---|
| | ALTITUDE RANGE ft (m) | AVG. GAS HEAT VALUE AT ALTITUDE (Btu/cu ft) | SPECIFIC GRAVITY OF NATURAL GAS | | | |
| | | | 0.58 | 0.60 | 0.62 | 0.64 |
| | | | Manifold Pressure (in. W.C.) | | | |
| U.S.A. | 0 (0) to 2000 (610) | 900 | 3.0 | 3.1 | 3.2 | 3.3 |
| | | 925 | 2.8 | 2.9 | 3.0 | 3.1 |
| | | 950 | 2.7 | 2.8 | 2.9 | 3.0 |
| | | 975 | 2.6 | 2.6 | 2.7 | 2.8 |
| | | 1000 | 2.4 | 2.5 | 2.6 | 2.7 |
| | | 1025 | 2.3 | 2.4 | 2.5 | 2.5 |
| | | 1050 | 2.2 | 2.3 | 2.4 | 2.4 |
| | | 1075 | 2.1 | 2.2 | 2.2 | 2.3 |
| | | 1100 | 2.0 | 2.1 | 2.1 | 2.2 |
| U.S.A. | 2001 (611) to 3000 (914) | 800 | 3.2 | 3.3 | 3.5 | 3.6 |
| | | 825 | 3.0 | 3.1 | 3.3 | 3.4 |
| | | 850 | 2.9 | 3.0 | 3.1 | 3.2 |
| | | 875 | 2.7 | 2.8 | 2.9 | 3.0 |
| | | 900 | 2.6 | 2.6 | 2.7 | 2.8 |
| | | 925 | 2.4 | 2.5 | 2.6 | 2.7 |
| | | 950 | 2.3 | 2.4 | 2.5 | 2.5 |
| | | 975 | 2.2 | 2.3 | 2.3 | 2.4 |
| | | 1000 | 2.1 | 2.1 | 2.2 | 2.3 |
| U.S.A. Only | 3001 (915) to 4000 (1219) | 775 | 3.2 | 3.3 | 3.4 | 3.5 |
| | | 800 | 3.0 | 3.1 | 3.2 | 3.3 |
| | | 825 | 2.8 | 2.9 | 3.0 | 3.1 |
| | | 850 | 2.6 | 2.7 | 2.8 | 2.9 |
| | | 875 | 2.5 | 2.6 | 2.7 | 2.8 |
| | | 900 | 2.4 | 2.4 | 2.5 | 2.6 |
| | | 925 | 2.2 | 2.3 | 2.4 | 2.5 |
| | | 950 | 2.1 | 2.2 | 2.3 | 2.3 |
| | | 975 | 2.0 | 2.1 | 2.2 | 2.2 |
| | | 1000 | 1.9 | 2.0 | 2.0 | 2.1 |
| U.S.A. Only | 4001 (1220) to 5000 (1524) | 750 | 3.1 | 3.2 | 3.4 | 3.5 |
| | | 775 | 2.9 | 3.0 | 3.1 | 3.2 |
| | | 800 | 2.8 | 2.9 | 2.9 | 3.0 |
| | | 825 | 2.6 | 2.7 | 2.8 | 2.9 |
| | | 850 | 2.4 | 2.5 | 2.6 | 2.7 |
| | | 875 | 2.3 | 2.4 | 2.5 | 2.5 |
| | | 900 | 2.2 | 2.3 | 2.3 | 2.4 |
| | | 925 | 2.1 | 2.1 | 2.2 | 2.3 |
| | | 950 | 2.0 | 2.0 | 2.1 | 2.2 |
| | | 975 | 1.9 | 1.9 | 2.0 | 2.0 |
| | | 1000 | 1.8 | 1.8 | 1.9 | 1.9 |
| U.S.A. Only | 5001 (1220) to 5400 (1646) | 725 | 3.2 | 3.3 | 3.4 | 3.5 |
| | | 750 | 2.9 | 3.0 | 3.1 | 3.3 |
| | | 775 | 2.8 | 2.8 | 2.9 | 3.0 |
| | | 800 | 2.6 | 2.7 | 2.8 | 2.9 |
| | | 825 | 2.4 | 2.5 | 2.6 | 2.7 |
| | | 850 | 2.3 | 2.4 | 2.4 | 2.5 |
| | | 875 | 2.1 | 2.2 | 2.3 | 2.4 |
| | | 900 | 2.0 | 2.1 | 2.2 | 2.2 |
| | | 925 | 1.9 | 2.0 | 2.1 | 2.1 |
| | | 950 | 1.8 | 1.9 | 1.9 | 2.0 |
| | | 975 | 1.7 | 1.8 | 1.8 | 1.9 |
| | | 1000 | 1.8 | 1.8 | 1.8 | 1.8 |

**Table 13 – Gas Valve Outlet Pressure for Gas Heat Values at Altitude - 60,000**

| Tabulated Data Based on 60,000 BTUH Input for 0–ft (0 M) to 5400–ft (1646 M) above sea level | | | | | | |
|---|---|---|---|---|---|---|
| ALTITUDE RANGE ft (m) | | AVG. GAS HEAT VALUE AT ALTITUDE (Btu/cu ft) | SPECIFIC GRAVITY OF NATURAL GAS | | | |
| | | | 0.58 | 0.60 | 0.62 | 0.64 |
| | | | Manifold Pressure (in. W.C.) | | | |
| U.S.A. | 0 (0) to 2000 (610) | 900 | 2.7 | 2.8 | 2.9 | 2.9 |
| | | 925 | 2.5 | 2.6 | 2.7 | 2.8 |
| | | 950 | 2.4 | 2.5 | 2.6 | 2.6 |
| | | 975 | 2.3 | 2.3 | 2.4 | 2.5 |
| | | 1000 | 2.2 | 2.2 | 2.3 | 2.4 |
| | | 1025 | 2.0 | 2.1 | 2.2 | 2.3 |
| | | 1050 | 1.9 | 2.0 | 2.1 | 2.2 |
| | | 1075 | 1.9 | 1.9 | 2.0 | 2.1 |
| | | 1100 | 1.8 | 1.8 | 1.9 | 2.0 |
| U.S.A. | 2001 (611) to 3000 (914) | 800 | 2.9 | 3.0 | 3.1 | 3.1 |
| | | 825 | 2.7 | 2.8 | 2.9 | 3.0 |
| | | 850 | 2.6 | 2.6 | 2.7 | 2.8 |
| | | 875 | 2.4 | 2.5 | 2.6 | 2.7 |
| | | 900 | 2.3 | 2.4 | 2.4 | 2.5 |
| | | 925 | 2.1 | 2.2 | 2.3 | 2.4 |
| | | 950 | 2.0 | 2.1 | 2.2 | 2.2 |
| | | 975 | 1.9 | 2.0 | 2.1 | 2.1 |
| | | 1000 | 1.8 | 1.9 | 2.0 | 2.0 |
| U.S.A. Only | 3001 (915) to 4000 (1219) | 775 | 2.8 | 2.9 | 3.0 | 3.1 |
| | | 800 | 2.7 | 2.8 | 2.9 | 2.9 |
| | | 825 | 2.5 | 2.6 | 2.7 | 2.8 |
| | | 850 | 2.4 | 2.4 | 2.5 | 2.6 |
| | | 875 | 2.2 | 2.3 | 2.4 | 2.5 |
| | | 900 | 2.1 | 2.2 | 2.2 | 2.3 |
| | | 925 | 2.0 | 2.0 | 2.1 | 2.2 |
| | | 950 | 1.9 | 1.9 | 2.0 | 2.1 |
| | | 975 | 1.8 | 1.8 | 1.9 | 2.0 |
| | | 1000 | 1.8 | 1.8 | 1.8 | 1.9 |
| U.S.A. Only | 4001 (1220) to 5000 (1524) | 750 | 2.8 | 2.9 | 3.0 | 3.1 |
| | | 775 | 2.6 | 2.7 | 2.8 | 2.9 |
| | | 800 | 2.5 | 2.5 | 2.6 | 2.7 |
| | | 825 | 2.3 | 2.4 | 2.5 | 2.5 |
| | | 850 | 2.2 | 2.2 | 2.3 | 2.4 |
| | | 875 | 2.0 | 2.1 | 2.2 | 2.3 |
| | | 900 | 1.9 | 2.0 | 2.1 | 2.1 |
| | | 925 | 1.8 | 1.9 | 2.0 | 2.0 |
| | | 950 | 1.8 | 1.8 | 1.8 | 1.9 |
| | | 975 | 1.8 | 1.8 | 1.8 | 1.8 |
| | | 1000 | 1.8 | 1.8 | 1.8 | 1.8 |
| U.S.A. Only | 5001 (1524) to 5400 (1646) | 725 | 2.8 | 2.9 | 3.0 | 3.0 |
| | | 750 | 2.6 | 2.7 | 2.8 | 2.8 |
| | | 775 | 2.4 | 2.5 | 2.6 | 2.7 |
| | | 800 | 2.3 | 2.3 | 2.4 | 2.5 |
| | | 825 | 2.1 | 2.2 | 2.3 | 2.3 |
| | | 850 | 2.0 | 2.1 | 2.1 | 2.2 |
| | | 875 | 1.9 | 1.9 | 2.0 | 2.1 |
| | | 900 | 1.8 | 1.8 | 1.9 | 2.0 |
| | | 925 | 1.8 | 1.8 | 1.8 | 1.9 |
| | | 950 | 1.8 | 1.8 | 1.8 | 1.8 |
| | | 975 | 1.8 | 1.8 | 1.8 | 1.8 |
| | | 1000 | 1.8 | 1.8 | 1.8 | 1.8 |

**Table 14 – Gas Valve Outlet Pressure for Gas Heat Values at Altitude - 80,000**

| Tabulated Data Based on 80,000 BTUH Input, for 0–ft (0 M) to 5400–ft (1646 M) above sea level | | | | | | |
|---|---|---|---|---|---|---|
| ALTITUDE RANGE ft (m) | | AVG. GAS HEAT VALUE AT ALTITUDE (Btu/cu ft) | SPECIFIC GRAVITY OF NATURAL GAS | | | |
| | | | 0.58 | 0.60 | 0.62 | 0.64 |
| | | | Manifold Pressure (in. W.C.) | | | |
| U.S.A. | 0 (0) to 2000 (610) | 900 | 2.8 | 2.9 | 3.0 | 3.1 |
| | | 925 | 2.6 | 2.7 | 2.8 | 2.9 |
| | | 950 | 2.5 | 2.6 | 2.7 | 2.8 |
| | | 975 | 2.4 | 2.5 | 2.5 | 2.6 |
| | | 1000 | 2.3 | 2.3 | 2.4 | 2.5 |
| | | 1025 | 2.1 | 2.2 | 2.3 | 2.4 |
| | | 1050 | 2.0 | 2.1 | 2.2 | 2.3 |
| | | 1075 | 1.9 | 2.0 | 2.1 | 2.1 |
| | | 1100 | 1.9 | 1.9 | 2.0 | 2.1 |
| U.S.A. | 2001 (611) to 3000 (914) | 800 | 3.0 | 3.1 | 3.1 | 3.1 |
| | | 825 | 2.8 | 2.9 | 3.0 | 3.1 |
| | | 850 | 2.7 | 2.8 | 2.9 | 3.0 |
| | | 875 | 2.5 | 2.6 | 2.7 | 2.8 |
| | | 900 | 2.4 | 2.5 | 2.5 | 2.6 |
| | | 925 | 2.2 | 2.3 | 2.4 | 2.5 |
| | | 950 | 2.1 | 2.2 | 2.3 | 2.4 |
| | | 975 | 2.0 | 2.1 | 2.2 | 2.2 |
| | | 1000 | 1.9 | 2.0 | 2.1 | 2.1 |
| U.S.A. Only | 3001 (915) to 4000 (1219) | 775 | 3.0 | 3.1 | 3.1 | 3.1 |
| | | 800 | 2.8 | 2.9 | 3.0 | 3.1 |
| | | 825 | 2.6 | 2.7 | 2.8 | 2.9 |
| | | 850 | 2.5 | 2.6 | 2.6 | 2.7 |
| | | 875 | 2.3 | 2.4 | 2.5 | 2.6 |
| | | 900 | 2.2 | 2.3 | 2.3 | 2.4 |
| | | 925 | 2.1 | 2.1 | 2.2 | 2.3 |
| | | 950 | 2.0 | 2.0 | 2.1 | 2.2 |
| | | 975 | 1.9 | 1.9 | 2.0 | 2.1 |
| | | 1000 | 1.8 | 1.8 | 1.9 | 2.0 |
| U.S.A. Only | 4001 (1220) to 5000 (1524) | 750 | 2.9 | 3.0 | 3.1 | 3.1 |
| | | 775 | 2.7 | 2.8 | 2.9 | 3.0 |
| | | 800 | 2.6 | 2.7 | 2.8 | 2.8 |
| | | 825 | 2.4 | 2.5 | 2.6 | 2.7 |
| | | 850 | 2.3 | 2.4 | 2.4 | 2.5 |
| | | 875 | 2.1 | 2.2 | 2.3 | 2.4 |
| | | 900 | 2.0 | 2.1 | 2.2 | 2.2 |
| | | 925 | 1.9 | 2.0 | 2.0 | 2.1 |
| | | 950 | 1.8 | 1.9 | 1.9 | 2.0 |
| | | 975 | 1.8 | 1.8 | 1.8 | 1.9 |
| | | 1000 | 1.8 | 1.8 | 1.8 | 1.8 |
| U.S.A. Only | 5001 (1524) to 5400 (1646) | 725 | 2.9 | 3.0 | 3.1 | 3.1 |
| | | 750 | 2.7 | 2.8 | 2.9 | 3.0 |
| | | 775 | 2.5 | 2.6 | 2.7 | 2.8 |
| | | 800 | 2.4 | 2.4 | 2.5 | 2.6 |
| | | 825 | 2.2 | 2.3 | 2.4 | 2.5 |
| | | 850 | 2.1 | 2.2 | 2.2 | 2.3 |
| | | 875 | 2.0 | 2.0 | 2.1 | 2.2 |
| | | 900 | 1.9 | 1.9 | 2.0 | 2.1 |
| | | 925 | 1.8 | 1.8 | 1.9 | 1.9 |
| | | 950 | 1.8 | 1.8 | 1.8 | 1.8 |
| | | 975 | 1.8 | 1.8 | 1.8 | 1.8 |
| | | 1000 | 1.8 | 1.8 | 1.8 | 1.8 |

**Table 15 – Gas Valve Outlet Pressure for Gas Heat Values at Altitude - 100,000**

| Tabulated Data Based on 100,000 BTUH Input for 0–ft (0 M) to 5400–ft (1646 M) above sea level | | | | | | |
|---|---|---|---|---|---|---|
| ALTITUDE RANGE ft (m) | | AVG. GAS HEAT VALUE AT ALTITUDE (Btu/cu ft) | 0.58 | 0.60 | 0.62 | 0.64 |
| | | | Manifold Pressure (in. W.C.) | | | |
| U.S.A. | 0 (0) to 2000 (610) | 900 | 3.3 | 3.4 | 3.5 | 3.6 |
| | | 925 | 3.1 | 3.2 | 3.3 | 3.4 |
| | | 950 | 2.9 | 3.0 | 3.1 | 3.2 |
| | | 975 | 2.8 | 2.9 | 3.0 | 3.1 |
| | | 1000 | 2.6 | 2.7 | 2.8 | 2.9 |
| | | 1025 | 2.5 | 2.6 | 2.7 | 2.8 |
| | | 1050 | 2.4 | 2.5 | 2.6 | 2.6 |
| | | 1075 | 2.3 | 2.4 | 2.4 | 2.5 |
| | | 1100 | 2.2 | 2.3 | 2.3 | 2.4 |
| U.S.A. | 2001 (611) to 3000 (914) | 800 | 3.5 | 3.7 | 3.8 | 3.9 |
| | | 825 | 3.3 | 3.4 | 3.6 | 3.7 |
| | | 850 | 3.1 | 3.2 | 3.3 | 3.5 |
| | | 875 | 3.0 | 3.1 | 3.2 | 3.3 |
| | | 900 | 2.8 | 2.9 | 3.0 | 3.1 |
| | | 925 | 2.6 | 2.7 | 2.8 | 2.9 |
| | | 950 | 2.5 | 2.6 | 2.7 | 2.8 |
| | | 975 | 2.4 | 2.5 | 2.5 | 2.6 |
| | | 1000 | 2.3 | 2.3 | 2.4 | 2.5 |
| U.S.A. Only | 3001 (915) to 4000 (1219) | 775 | 3.5 | 3.6 | 3.7 | 3.8 |
| | | 800 | 3.3 | 3.4 | 3.5 | 3.6 |
| | | 825 | 3.1 | 3.2 | 3.3 | 3.4 |
| | | 850 | 2.9 | 3.0 | 3.1 | 3.2 |
| | | 875 | 2.7 | 2.8 | 2.9 | 3.0 |
| | | 900 | 2.6 | 2.7 | 2.8 | 2.8 |
| | | 925 | 2.4 | 2.5 | 2.6 | 2.7 |
| | | 950 | 2.3 | 2.4 | 2.5 | 2.6 |
| | | 975 | 2.2 | 2.3 | 2.3 | 2.4 |
| | | 1000 | 2.1 | 2.2 | 2.2 | 2.3 |
| U.S.A. Only | 4001 (1220) to 5000 (1524) | 750 | 3.4 | 3.5 | 3.7 | 3.8 |
| | | 775 | 3.2 | 3.3 | 3.4 | 3.5 |
| | | 800 | 3.0 | 3.1 | 3.2 | 3.3 |
| | | 825 | 2.8 | 2.9 | 3.0 | 3.1 |
| | | 850 | 2.7 | 2.8 | 2.9 | 2.9 |
| | | 875 | 2.5 | 2.6 | 2.7 | 2.8 |
| | | 900 | 2.4 | 2.5 | 2.5 | 2.6 |
| | | 925 | 2.3 | 2.3 | 2.4 | 2.5 |
| | | 950 | 2.1 | 2.2 | 2.3 | 2.4 |
| | | 975 | 2.0 | 2.1 | 2.2 | 2.2 |
| | | 1000 | 1.9 | 2.0 | 2.1 | 2.1 |
| U.S.A. Only | 5001 (1524) to 5400 (1646) | 725 | 3.4 | 3.6 | 3.7 | 3.8 |
| | | 750 | 3.2 | 3.3 | 3.4 | 3.6 |
| | | 775 | 3.0 | 3.1 | 3.2 | 3.3 |
| | | 800 | 2.8 | 2.9 | 3.0 | 3.1 |
| | | 825 | 2.6 | 2.7 | 2.8 | 2.9 |
| | | 850 | 2.5 | 2.6 | 2.7 | 2.8 |
| | | 875 | 2.4 | 2.4 | 2.5 | 2.6 |
| | | 900 | 2.2 | 2.3 | 2.4 | 2.5 |
| | | 925 | 2.1 | 2.2 | 2.2 | 2.3 |
| | | 950 | 2.0 | 2.1 | 2.1 | 2.2 |
| | | 975 | 1.9 | 1.9 | 2.0 | 2.1 |
| | | 1000 | 1.8 | 1.9 | 1.9 | 2.0 |

# SERVICE AND MAINTENANCE PROCEDURES

Untrained personnel can perform basic maintenance functions such as cleaning and replacing air filters. All other operations must be performed by trained service personnel. A qualified service person should inspect the furnace once a year.

**⚠ WARNING**

**FIRE, INJURY, OR DEATH HAZARD**

Failure to follow this warning could result in personal injury, death and/or property damage.

The ability to properly perform maintenance on this equipment requires certain knowledge, mechanical skills, tools, and equipment. If you do not possess these, do not attempt to perform any maintenance on this equipment other than those procedures recommended in the User's Manual.

**⚠ WARNING**

**ELECTRICAL SHOCK, FIRE OR EXPLOSION HAZARD**

Failure to follow this warning could result in personal injury or death.

Before installing, modifying, or servicing system, main electrical disconnect switch must be in the OFF position and install a lockout tag. There may be more than one disconnect switch. Lock out and tag switch with a suitable warning label. Verify proper operation after servicing.

**⚠ CAUTION**

**ELECTRICAL OPERATION HAZARD**

Failure to follow this caution may result in improper furnace operation or failure of furnace.

Label all wires prior to disconnection when servicing controls. Wiring errors can cause improper and dangerous operation.

## INTRODUCTION

### GENERAL

These instructions are written as if the furnace is installed in an upflow application. An upflow furnace application is where the blower is located below the combustion and controls section of the furnace, and conditioned air is discharged upward. Since this furnace can be installed in any of the 4 positions shown in Fig. 4, you must revise your orientation to component location accordingly.

### ELECTRICAL CONTROLS AND WIRING

**⚠ WARNING**

**ELECTRICAL OPERATION HAZARD**

Failure to follow this warning could result in personal injury or death.

There may be more than one electrical supply to the furnace. Check accessories and cooling unit for additional electrical supplies that must be shut off during furnace servicing. Lock out and tag switch with a suitable warning label.

The electrical ground and polarity for 115-v wiring must be properly maintained. Refer to Fig. 24 for field wiring information and to Fig. 38 for furnace wiring information.

**NOTE**: If the polarity is not correct, the STATUS LED on the control will flash rapidly and prevent the furnace from heating. The control system also requires an earth ground for proper operation of the control and flame-sensing electrode.

The 24-v circuit contains an automotive-type, 3-amp. fuse located on the control. (See Fig. 38) Any shorts of the 24-v wiring during installation, service, or maintenance will cause this fuse to blow. If fuse replacement is required, use ONLY a 3-amp. fuse. The control LED will display a 24 flash code when fuse needs to be replaced.

Proper instrumentation is required to service electrical controls. The control in this furnace is equipped with a Status Code LED (Light-Emitting Diode) to aid in installation, servicing, and troubleshooting. The furnace control LED is either ON continuously, rapid flashing or displaying a code composed of 2 digits. The first digit is the number of short flashes, the second digit is the number of long flashes.

For an explanation of status codes, refer to service label located on blower access door or Fig. 35 and the Service guide at the end of this manual.

See Fig. 35 for a summary of fault codes and a brief explanation of fault codes.

The stored status code will not be erased from the control memory, if 115- or 24-v power is interrupted.

1. To retrieve status code, proceed with the following:

**NOTE**: NO thermostat signal may be present at control, and all blower-OFF delays must be completed.

   a. Remove outer access door.
   b. Remove inner blower door.
   c. Close blower door interlock switch.
   d. Using a length of wire, briefly short the TEST/TWIN terminal to the C terminal on the furnace control.

2. When above items have been completed, the LED flashes the fault code history (up to 5 fault codes from newest to oldest). Record the status code(s) for further troubleshooting.
3. Check LED status. If no previous faults in the history, control will flash status code 11.
4. Component self-test will begin. Refer to Component Test section of service label for complete test sequence.

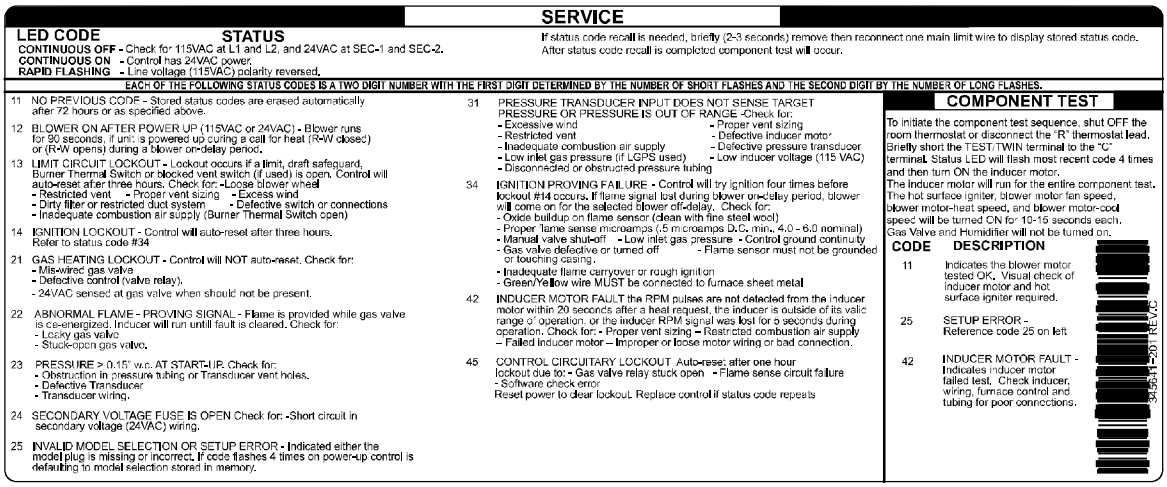

SERVICE

LED CODE — STATUS
CONTINUOUS OFF - Check for 115VAC at L1 and L2, and 24VAC at SEC-1 and SEC-2.
CONTINUOUS ON - Control has 24VAC power.
RAPID FLASHING - Line voltage (115VAC) polarity reversed.

If status code recall is needed, briefly (2-3 seconds) remove then reconnect one main limit wire to display stored status code. After status code recall is completed component test will occur.

EACH OF THE FOLLOWING STATUS CODES IS A TWO DIGIT NUMBER WITH THE FIRST DIGIT DETERMINED BY THE NUMBER OF SHORT FLASHES AND THE SECOND DIGIT BY THE NUMBER OF LONG FLASHES.

11 NO PREVIOUS CODE - Stored status codes are erased automatically after 72 hours or as specified above.

12 BLOWER ON AFTER POWER UP (115VAC or 24VAC) - Blower runs for 90 seconds, if unit is powered up during a call for heat (R-W closed) or (R-W opens) during a blower on-delay period.

13 LIMIT CIRCUIT LOCKOUT - Lockout occurs if a limit, draft safeguard, Burner Thermal Switch or blocked vent switch (if used) is open. Control will auto-reset after three hours. Check for: -Loose blower wheel
- Restricted vent - Proper vent sizing - Excess wind
- Dirty filter or restricted duct system - Defective switch or connections
- Inadequate combustion air supply (Burner Thermal Switch open)

14 IGNITION LOCKOUT - Control will auto-reset after three hours. Refer to status code #34

21 GAS HEATING LOCKOUT - Control will NOT auto-reset. Check for:
- Mis-wired gas valve
- Defective control (valve relay).
- 24VAC sensed at gas valve when should not be present.

22 ABNORMAL FLAME - PROVING SIGNAL - Flame is provided while gas valve is de-energized. Inducer will run untill fault is cleared. Check for:
- Leaky gas valve
- Stuck-open gas valve.

23 PRESSURE > 0.15" w.c. AT START-UP. Check for:
- Obstruction in pressure tubing or Transducer vent holes.
- Defective Transducer
- Transducer wiring.

24 SECONDARY VOLTAGE FUSE IS OPEN Check for: -Short circuit in secondary voltage (24VAC) wiring.

25 INVALID MODEL SELECTION OR SETUP ERROR - Indicated either the model plug is missing or incorrect. If code flashes 4 times on power-up control is defaulting to model selection stored in memory.

31 PRESSURE TRANSDUCER INPUT DOES NOT SENSE TARGET PRESSURE OR PRESSURE IS OUT OF RANGE -Check for:
- Excessive wind - Proper vent sizing
- Restricted vent - Defective inducer motor
- Inadequate combustion air supply - Defective pressure transducer
- Low inlet gas pressure (if LGPS used) - Low inducer voltage (115 VAC)
- Disconnected or obstructed pressure tubing

34 IGNITION PROVING FAILURE - Control will try ignition four times before lockout #14 occurs. If flame signal lost during blower on-delay period, blower will come on for the selected blower off-delay. Check for:
- Oxide buildup on flame sensor (clean with fine steel wool)
- Proper flame sense microamps (.5 microamps D.C. min., 4.0 - 6.0 nominal)
- Manual valve shut-off - Low inlet gas pressure - Control ground continuity
- Gas valve defective or turned off - Flame sensor must not be grounded or touching casing.
- Inadequate flame carryover or rough ignition
- Green/Yellow wire MUST be connected to furnace sheet metal

42 INDUCER MOTOR FAULT the RPM pulses are not detected from the inducer motor within 20 seconds after a heat request, the inducer is outside of its valid range of operation, or the inducer RPM signal was lost for 5 seconds during operation. Check for: - Proper vent sizing - Restricted combustion air supply
- Failed inducer motor - Improper or loose motor wiring or bad connection.

45 CONTROL CIRCUITARY LOCKOUT Auto-reset after one hour lockout due to: - Gas valve relay stuck open - Flame sense circuit failure
- Software check error
Reset power to clear lockout. Replace control if status code repeats

COMPONENT TEST

To initiate the component test sequence, shut OFF the room thermostat or disconnect the "R" thermostat lead. Briefly short the TEST/TWIN terminal to the "C" terminal. Status LED will flash most recent code 4 times and then turn ON the inducer motor.
The inducer motor will run for the entire component test. The hot surface igniter, blower motor fan speed, blower motor-heat speed, and blower motor-cool speed will be turned ON for 10-15 seconds each. Gas Valve and Humidifier will not be turned on.

| CODE | DESCRIPTION |
|---|---|
| 11 | Indicates the blower motor tested OK. Visual check of inducer motor and hot surface igniter required. |
| 25 | SETUP ERROR - Reference code 25 on left |
| 42 | INDUCER MOTOR FAULT - Indicates inducer motor failed test. Check inducer, wiring, furnace control and tubing for poor connections. |

90-351-2011 REV.A0

A190412

**Fig. 35 - Service Label**

## CARE AND MAINTENANCE

**WARNING**

**FIRE OR EXPLOSION HAZARD**

Failure to follow this warning could result in personal injury, death and/or property damage.

Never store anything on, near, or in contact with the furnace, such as:

1. Spray or aerosol cans, rags, brooms, dust mops, vacuum cleaners, or other cleaning tools.
2. Soap powders, bleaches, waxes or other cleaning compounds, plastic or plastic containers, gasoline, kerosene, cigarette lighter fluid, dry cleaning fluids, or other volatile fluids.
3. Paint thinners and other painting compounds, paper bags, or other paper products.

For continuing high performance and to minimize possible equipment failure, periodic maintenance must be performed on this equipment. Consult your local dealer about proper frequency of maintenance and the availability of a maintenance contract.

**WARNING**

**ELECTRICAL SHOCK AND FIRE HAZARD**

Failure to follow this warning could result in personal injury, death or property damage.

Turn off the gas and electrical supplies to the unit and install lockout tag before performing any maintenance or service. Follow the operating instructions on the label attached to the furnace.

## ⚠ WARNING

**CARBON MONOXIDE POISONING AND FIRE HAZARD**

Failure to follow this warning could result in personal injury, death and/or property damage.

Never operate unit without a filter or with filter access door removed.

## ⚠ CAUTION

**CUT HAZARD**

Failure to follow this caution may result in personal injury.

Sheet metal parts may have sharp edges or burrs. Use care and wear appropriate protective clothing, safety glasses and gloves when handling parts and servicing furnaces.

The minimum maintenance on this furnace is as follows:

1. Check and clean/replace air filter each month or more frequently if required. Replace if torn.
2. Check burner inlet elbow opening for cleanliness and any visible debris. Burner assembly removal should only be performed for troubleshooting and diagnosis of operational issues. Refer to troubleshooting and service guide.
3. Check blower motor and wheel for cleanliness each heating and cooling season. Clean as necessary.
4. Check electrical connections for tightness and controls for proper operation each heating season. Service as necessary.
5. Inspect the vent pipe/vent system before each heating season for rust, corrosion, water leakage, sagging pipes or broken fittings. Have vent pipes/vent system serviced by a qualified service agency.
6. Inspect any accessories attached to the furnace such as a humidifier or electronic air cleaner. Perform any service or maintenance to the accessories as recommended in the accessory instructions.

### CLEANING AND/OR REPLACING AIR FILTER

The air filter arrangement will vary depending on the application. The filter is exterior to the furnace casing.

**NOTE**: If the filter has an airflow direction arrow, the arrow must point towards the blower.

**Table 16 – Filter Size Information (In. / mm)**

| FURNACE CASING WIDTH In. (mm) | FILTER SIZE (In. / mm) | | FILTER TYPE |
|---|---|---|---|
| | Side Return | Bottom Return | |
| 17–1/2 (445) | 16 X 25 X 3/4 (406 x 635 x 19) | 16 X 25 X 3/4 (406 x 635 x 19) | Washable* |
| 21 (533) | 16 x 25 x 3/4 (406 x 635 x 19) | 20 X 25 X 3/4 (508 x 635 x 19) | Washable* |

* Recommended

Media cabinet filter procedures :

1. Turn off electrical supply to furnace before removing filter access door.
2. Remove filter cabinet door.
3. Slide filter out of cabinet.
4. If equipped with permanent, washable 3/4-in. (19 mm) filter, clean filter by spraying cold tap water through filter in opposite direction of airflow. Rinse filter and let dry. Oiling or coating of the filter is not recommended. See Table 16 for size information.
5. If equipped with factory-specified disposable media filter, replace only with media filter having the same part number and size. For expandable replacement media, refer to the instructions included with the replacement media.
6. Slide filter into cabinet.
7. Replace filter cabinet door.
8. Turn on electrical supply to furnace.

### BLOWER MOTOR AND WHEEL

## ⚠ WARNING

**ELECTRICAL SHOCK HAZARD**

Failure to follow this warning could result in personal injury or death.

Blower access door switch opens 115-v power to control. No component operation can occur unless switch is closed. Caution must be taken when manually closing this switch for service purposes.

**NOTE**: The blower wheel should not be dropped or bent as balance will be affected. The following steps should be performed by a qualified service agency.

To ensure long life and high efficiency, clean accumulated dirt and grease from blower wheel and motor annually.

The inducer and blower motors are pre-lubricated and require no additional lubrication. These motors can be identified by the absence of oil ports on each end of the motor.

Clean blower motor and wheel as follows:

1. Turn off electrical supply to furnace.
2. Remove outer door.
3. Remove two screws from blower access door and remove blower access door.
4. All factory wires can be left connected, but field thermostat connections may need to be disconnected depending on their length and routing.
5. Remove two screws holding blower assembly to blower deck and slide blower assembly out of furnace.
6. Clean blower wheel and motor using a vacuum with soft brush attachment. Blower wheel blades may be cleaned with a small paint or flux brush. Do not remove or disturb balance weights (clips) on blower wheel blades.
7. Vacuum any loose dust from blower housing, wheel and motor.
8. If a greasy residue is present on blower wheel, remove wheel from the blower housing and wash it with an appropriate degreaser. To remove wheel:

**NOTE**: Before disassembly, mark blower motor, and blower housing so motor and each arm is positioned at the same location during reassembly.

a. Disconnect power choke wires (if used) and ground wire attached to blower housing.
b. Remove screws securing cutoff plate and remove cutoff plate from housing.
c. Loosen set screw holding blower wheel on motor shaft (160+/-20 in.-lb. when reassembling).
d. Remove bolts holding motor to blower housing and slide motor out of wheel (40+/-10 in.-lb. when reassembling).
e. Remove blower wheel from housing.

f. Clean wheel and housing.

9. Reassemble motor and blower by reversing steps 8f finishing with 8a. Be sure to reattach ground wire to the blower housing.
10. Verify that blower wheel is centered in blower housing and set screw contacts the flat portion of the motor shaft. Loosen set screw on blower wheel and reposition if necessary.
11. Spin the blower wheel by hand to verify that the wheel does not rub on the housing.
12. Reinstall blower assembly in furnace.
13. Reinstall two screws securing blower assembly to blower deck.

**⚠ CAUTION**

**UNIT DAMAGE HAZARD**

Failure to follow this caution may result in shortened heat exchanger life.

Heating fan speed(s) MUST be adjusted to provide proper air temperature rise as specified on the rating plate. Recommended operation is at the midpoint of the rise range or slightly above. Refer to "SET TEMPERATURE RISE" under START-UP, ADJUSTMENT, and SAFETY CHECK.

**NOTE**: Refer to Table 5 for motor speed lead relocation if leads were not identified before disconnection.

14. Refer to furnace wiring diagram, and connect thermostat leads if previously disconnected.
15. To check blower for proper rotation:
    a. Turn on electrical supply.

**⚠ WARNING**

**ELECTRICAL SHOCK HAZARD**

Failure to follow this warning could result in personal injury, or death.

Blower access door switch opens 115-v power to furnace control. No component operation can occur unless switch is closed. Exercise caution to avoid electrical shock from exposed electrical components when manually closing this switch for service purposes.

    b. Manually close blower access door switch.
    c. Verify blower is rotating in the correct direction.
16. If furnace is operating properly, RELEASE BLOWER ACCESS DOOR SWITCH. Remove any jumpers or reconnect any disconnected thermostat leads. Replace blower access door.
17. Reinstall outer door.
18. Cycle furnace through one complete heating and cooling cycle. Verify the furnace temperature rise as shown in "Adjustments" Section. Adjust temperature rise as shown in "Adjustments" Section. If outdoor temperature is below 70°F, (21°C) turn off circuit breaker to outdoor unit before running furnace in the cooling cycle. Turn outdoor circuit breaker on after completing cooling cycle.

## FLAME SENSOR CLEANING AND SERVICING IGNITOR

### Cleaning Flame Sensor

The following items must be performed by a qualified service technician. If the flame sensor develops an accumulation of light dirt or dust, it may be cleaned by using the following procedure:

**⚠ WARNING**

**ELECTRICAL SHOCK AND FIRE HAZARD**

Failure to follow this warning could result in personal injury, death, and/or property damage.

Turn off the gas and electrical supplies to the furnace and install lockout tag before performing any maintenance or service. Follow the operating instructions on the label attached to the furnace.

Refer to Fig. 36.

1. Disconnect power at external disconnect, fuse or circuit breaker.
2. Turn off gas at external shut-off or gas meter.
3. Remove control door and set aside.
4. Turn electric switch on gas valve to OFF.
5. Disconnect Flame Sensor wire from Flame Sensor.
6. Remove the flame sensor from the burner assembly.
7. (Optional) Remove the Hot Surface Ignitor (HSI) and bracket with ignitor gasket from the burner assembly.
8. Check ignitor resistance. Nominal resistance is 40 to 70 ohms at room temperature and is stable over the life of the ignitor.
9. Clean the flame sensor with fine steel wool (0000 grade). Do not use sand paper or emery cloth.

**To reinstall ignitor and flame sensor:**

1. Install the Hot Surface Ignitor (HSI) and bracket with ignitor gasket into burner assembly.
2. Install flame sensor into burner assembly.
3. When installing the HSI and flame sensor, ¼" screws that are the same size of those removed must be used. Do not use longer screws.

**NOTE**: If insulation assembly is damaged, do not attempt to repair, must be replaced with insulation kit.

**NOTE**: Proper use of Personal Protective Equipment (PPE) must be followed, including safety glasses, gloves, and dust mask when removing and reinstalling the heat exchanger insulation assembly.

4. Connect the wire for the flame sensor.
5. Connect the wire for the Hot Surface Ignitor.

**⚠ WARNING**

**FIRE OR EXPLOSION HAZARD**

Failure to follow this warning could result in personal injury, death, and/or property damage.

Never purge a gas line into a combustion chamber. Never test for gas leaks with an open flame. Use a commercially available soap solution made specifically for the detection of leaks to check all connections. A fire or explosion may result causing property damage, personal injury or loss of life.

6. Turn gas on at electric switch on gas valve and at external shut-off or meter
7. Turn power on at external disconnect, fuse or circuit breaker.
8. Run the furnace through two complete heating cycles to check for proper operation
9. Install control door when complete.

## CLEANING HEAT EXCHANGER

**The following steps should be performed by a qualified service agency:**

**NOTE**: If the heat exchangers get a heavy accumulation of soot and carbon, they should be replaced rather than trying to clean them thoroughly. A heavy build-up of soot and carbon indicates that a problem exists which needs to be corrected, such as improper adjustment of gas valve outlet pressure, insufficient or poor quality combustion air, incorrect size or damaged orifice(s), improper gas, or a restricted heat exchanger. Action must be taken to correct the problem.

If it becomes necessary to clean the heat exchangers because of dust or corrosion, proceed as follows:

1. Turn OFF gas and electrical power to furnace.
2. Remove outer access door.
3. Disconnect vent connector from furnace vent elbow.
4. Disconnect wires to the following components. Mark wires to aid in reconnection of (be careful when disconnecting wires from switches because damage may occur):
   a. Inducer motor
   b. Transducer
   c. Limit over-temperature switch
   d. Gas valve
   e. Hot surface ignitor
   f. Flame-sensing electrode
   g. Burner thermal switch
   h. DSS Draft Safeguard
5. Remove screws that fasten the inducer cover assembly to the cell panel. Be careful not to damage the collector box. Inducer assembly and elbow need not be removed from collector box.
6. Disconnect gas supply line from gas valve.
7. Remove screws that attach the burner assembly to the cell panel. The gas valve and burners tube need not be removed from burner box.

**NOTE**: Be very careful when removing burner assembly to avoid breaking ignitor.

8. Remove insulation assembly from burner tube inlets.

**NOTE**: Proper use of Personal Protective Equipment (PPE) must be followed, including safety glasses, gloves, and dust mask when removing and reinstalling the heat exchanger insulation assembly.

9. Using field-provided large caliber rifle cleaning brush, 36-in. (914 mm) long steel spring cable, a variable speed, reversible electric drill, and vacuum cleaner, clean cells as follows:

**NOTE**: The materials needed in item 9. can usually be purchased at local hardware stores.

   a. Remove metal screw fitting from wire brush to allow insertion into cable.
   b. Insert the twisted wire end of brush into end of spring cable, and crimp tight with crimping tool or crimp by striking with ball-peen hammer. TIGHTNESS IS VERY IMPORTANT.

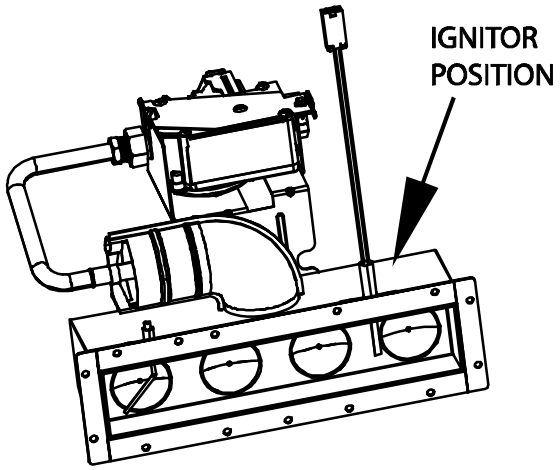


**Fig. 36 - Ignitor Position**

   (1.) Attach variable-speed, reversible drill to the end of spring cable (end opposite brush).
   (2.) Insert brush end of cable into the outlet opening of cell and slowly rotate with drill. DO NOT force cable. Gradually insert cable into upper pass of cell. (See Fig. 37)
   (3.) Work cable in and out of cell 3 or 4 times to obtain sufficient cleaning. DO NOT pull cable with great force. Reverse drill and gradually work cable out.
   (4.) Insert brush end of cable in burner inlet opening of cell, and proceed to clean two lower passes of cell in same manner as upper pass.
   (5.) Repeat foregoing procedures until each cell in furnace has been cleaned.
   (6.) Using vacuum cleaner, remove residue from each cell.
   (7.) Using vacuum cleaner with soft brush attachment, clean burner assembly.
   (8.) Clean flame sensor with fine steel wool.
   (9.) Reinstall the insulation assembly.

**NOTE**: If insulation assembly is damaged, do not attempt to repair, must be replaced with insulation kit.

**NOTE**: Proper use of Personal Protective Equipment (PPE) must be followed, including safety glasses, gloves, and dust mask when removing and reinstalling the heat exchanger insulation assembly.

   (10.) Reinstall burner assembly.

10. Remove old sealant from cell panel and collector box flange.
11. Spray releasing agent on the heat exchanger cell panel where inducer cover assembly contacts cell panel.

**NOTE**: A releasing agent such as cooking spray or equivalent (must not contain corn or canola oil, aromatic or halogenated hydrocarbons or inadequate seal may occur) and RTV sealant (G.E. 162, 6702, or Dow-Corning 738) are needed before starting installation.

**NOTE**: DO NOT substitute any other type of RTV sealant.

12. Apply new sealant to flange of collector box and attach to cell panel using existing screws, making sure all screws are secure.
13. Reconnect wires to the following components. (Use connection diagram on wiring label, if wires were not marked for reconnection locations.):
   a. Burner thermal switch
   b. Inducer motor
   c. Transducer

d. Limit over-temperature switch
e. Gas valve
f. Hot surface ignitor
g. Flame-sensing electrode
h. DSS Draft Safeguard

14. Reinstall vent connector on furnace vent elbow. Securely fasten vent connector to vent elbow with two (2) field-supplied, corrosion-resistant, sheet metal screws located 180° apart.
15. Replace blower access door only, if it was removed.
16. Set thermostat above room temperature and check furnace for proper operation.
17. Verify blower airflow and speed changes between heating and cooling.
18. Check for gas leaks.
19. Replace outer access door.

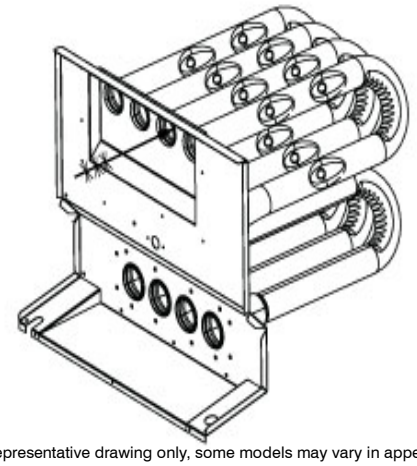

Representative drawing only, some models may vary in appearance.

A190291

**Fig. 37 - Cleaning Heat Exchanger Cell**

## ⚠ WARNING

**FIRE OR EXPLOSION HAZARD**

Failure to follow this warning could result in personal injury, death and/or property damage.

Never purge a gas line into a combustion chamber. Never test for gas leaks with an open flame. Use a commercially available soap solution made specifically for the detection of leaks to check all connections.

## SEQUENCE OF OPERATION

**NOTE**: Furnace control must be grounded for proper operation of furnace control and flame sensing electrode. Control is grounded through green/yellow wire routed to gas valve and burner box screw. Using the schematic diagram in Fig. 38, follow the sequence of operation through the different modes. Read and follow the wiring diagram very carefully.

**NOTE**: If a power interruption occurs during a call for heat W, the control will start a 90-second blower-only ON period two seconds after power is restored, if the thermostat is still calling for gas heating. The LED light will flash 12 during the 90-second period, after which the LED will ON continuous, as long as no faults are detected. After the 90-second blower-on period, the furnace will respond to the thermostat normally.

The blower door must be installed for power to be conducted through the blower door interlock switch ILK to the furnace control CPU, transformer TRAN, inducer motor IDM, blower motor BLWM, hot-surface ignitor HSI, and gas valve GV.

### Sequence of Operation - Heating

1. **Call for Heat:**
The wall thermostat "calls for heat", closing the R-W circuit. The furnace control performs a self-check, verifies the transducer reads no pressure present, and starts the inducer motor IDM ramp to prepurge
   a. **Inducer Prepurge Period:** The furnace control CPU ramps up the inducer motor IDM to prepurge pressure then the furnace control CPU begins a 15-second prepurge period. If the transducer fails to reach target pressure the inducer motor IDM will remain running until target pressure is maintained.
   b. **Ignitor Warm-Up:** At the end of the prepurge period, the Hot-Surface Ignitor HSI is energized for a 17-second ignitor warm-up period. Inducer maintains pressure during ignitor warm-up.
   c. **Trial for Ignition:** When the ignitor warm-up period is completed the main gas valve relay contact GVR closes to energize the gas valve solenoid GV. The gas valve solenoid GV permits gas flow to the burners where it is ignited by the HSI. Five seconds after the GVR closes, a 2-second flame proving period begins. The HSI ignitor will remain energized until the flame is sensed or until the 2-second flame proving period begins.
   d. **Flame Proving:** When the burner flame is proved at the flame sensor electrode FSE, the inducer motor IDM will increase speed (after a short delay of 14 seconds on some models) to a higher RUN pressure. The control will maintain this pressure once reached, and the furnace control CPU will begin the blower-ON delay period while continuing to hold the gas valve GV open. If the burner flame is not proved within the 2-second flame proving period, the control CPU will open the gas valve relay GVR, de-energizing the gas valve solenoid GV. The control CPU will repeat the ignition sequence for up to three more Trials-For-Ignition before going to an Ignition-Lockout. Lockout will be reset automatically after three hours, or by momentarily interrupting 115 vac power to the furnace, or by interrupting 24 vac power at SEC1 or SEC2 to the furnace control CPU (not at W, G, R, etc.). If flame is proved when flame should not be present, the furnace control CPU will lock out of Heating mode and operate the inducer motor IDM until flame is no longer proved.
   e. **Blower-On-Delay:** If the burner flame is proven a 25-second blower-ON delay begins from when the gas valve GV is opened. The blower motor BLWM is turned ON at heat airflow. Simultaneously, the humidifier terminal HUM and electronic air cleaner terminal EAC-1 are energized and remain energized throughout the heating cycle.
   f. **Blower-Off-Delay:** When the thermostat is satisfied, the R to W circuit is opened, de-energizing the gas valve GV, stopping gas flow to the burners, and de-energizing the humidifier terminal HUM. The inducer motor IDM will remain energized for a 15-second post-purge period. The blower motor BLWM and air cleaner terminal EAC-1 will remain energized at heat airflow for 90, 120, 150, or 180 seconds (depending on selection at blower-OFF delay switches). The furnace control CPU is factory-set for a 120-second blower-OFF delay.
2. **Cooling Mode**
The thermostat closes the R-G and -Y circuit for cooling. The R-Y circuit starts the outdoor unit on cooling speed, and the R-G and -Y circuit starts the furnace blower motor BLWM at cooling airflow. Cooling airflow (Table 5) is based on the motor wire lead selection used on the COOL terminal. The electronic air cleaner terminal EAC-1 is energized with 115 vac whenever the blower motor

BLWM is operating. When the thermostat is satisfied, the R-G and -Y circuit is opened. The outdoor unit stops, and the furnace blower BLWM and electronic air cleaner terminal EAC-1 will remain energized for an additional 90 seconds. Remove J2 Jumper to reduce the cooling off-delay to 5 seconds. (See Fig. 38)

3. **Continuous Blower Mode**
   When the R-G circuit is closed by the thermostat, the blower motor BLWM will operate at FAN tap (See Fig. 38). Terminal EAC-1 is energized as long as the blower motor BLWM is energized. During a call for heat, the furnace control CPU will transition the blower motor BLWM to FAN tap. The blower motor BLWM will remain ON until the main burners ignite then shut OFF and remain OFF for 25 seconds before coming back on at HEAT tap. The blower motor BLWM will revert to FAN tap after the heating cycle blower off-delay is completed. When the thermostat "calls for cooling", the blower motor BLWM will switch to operate at COOL tap. When the thermostat is satisfied, the blower motor BLWM will operate an additional 90 seconds at cooling airflow before transitioning back to FAN tap. When the R-G circuit is opened, the blower motor BLWM will continue operating for an additional 5 seconds, if no other function required blower motor BLWM operation.
4. **Heat Pump:** When installed with a heat pump, the furnace control automatically changes the timing sequence to avoid long blower off times during demand defrost cycles. Whenever the R-Wcircuit is closed along with the R-Y circuit, the furnace control CPU will transition to or bring on the blower motor BLWM at COOL tap. The blower motor BLWM will remain on until the main burners ignite then shut OFF and remain OFF for 25 seconds before coming back on at HEAT tap. When the R-W connection is opened, the furnace control begins a normal inducer post-purge period while changing the blower airflow. If R-Y circuit is still closed, the furnace control CPU will transition the blower motor BLWM airflow to COOL tap. If R-G circuit is open, the blower motor BLWM will remain on HEAT tap for the selected blower-OFF delay period. At the end of the blower-OFF delay, the blower motor BLWM will shut OFF unless R-G is circuit is closed, in which case the blower motor BLWM will operate at FAN tap.
5. **Component Test:** The furnace features a component test feature to help diagnose a system problem in the case of a component failure. To initiate the component test sequence, shut OFF the room thermostat or disconnect the R thermostat lead. Briefly short the TEST/TWIN terminal to the C terminal. Status LED will flash most recent code 4 times and then turn ON the inducer motor.
   The inducer motor will run for the entire component test. The hot surface ignitor, blower motor fan speed, blower motor-heat speed, and blower motor-cool speed will be turned ON for 10-15 seconds each. Gas Valve and Humidifier will not be turned on. (See Fig. 38).

**NOTE**: The component test feature will not operate if the control is receiving any thermostat signals or until all time delays have expired.

The component test sequence is as follows:

**Sequence of Operation - Fan Only**

1. Inducer relay ON 50% ULN80 for 15 seconds then proceed to Step 2. Inducer to remain ON throughout the test.
2. HSI relay ON for 15 sec., then OFF.
3. Blower motor FAN Speed for 10 sec., then OFF.
4. Blower motor HEAT Speed for 10 sec., then OFF.
5. Blower motor COOL Speed for 10 sec., then OFF.
6. Inducer OFF, end of test

**NOTE**: The EAC terminals are energized when the blower is operating.

**Wiring Diagrams**

Refer to Fig. 38 for wiring diagram.

**Troubleshooting**

Refer to the service label. (Fig. 35), wiring diagram (Fig. 38), and the Service Guide (Page 37) can be a useful tool in isolating furnace operation problems. The Guide will help to identify the problem or failed component. After replacing any component, verify correct operation sequence.

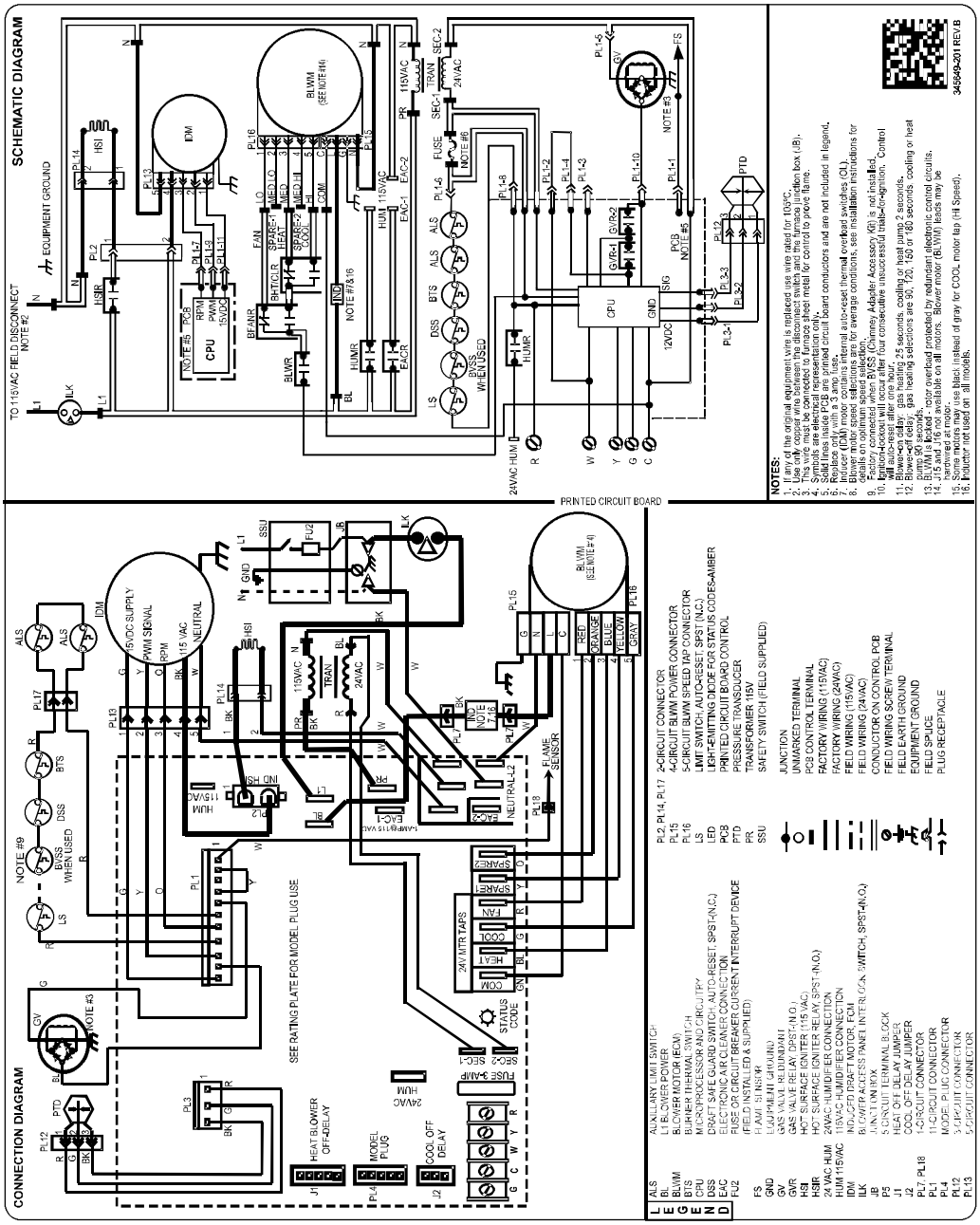


A190414

**Fig. 38 – Wiring Diagram**

# SERVICE GUIDE

| LED CODES | STATUS |
|---|---|
| **CONTINUOUS OFF** | Check for 115VAC at L1 and L2, and 24VAC at SEC-1 and SEC-2 |
| **CONTINUOUS ON** | Control has 24VAC power. |
| **RAPID FLASHING** | Line voltage (115VAC) polarity reversed. |

If status code recall is needed, briefly (2-3 seconds) remove then reconnect one main limit wire to display stored status code. After status code recall is completed test will occur.

**EACH OF THE FOLLOWING STATUS CODES IS A TWO DIGIT NUMBER WITH THE FIRST DIGIT DETERMINED BY THE NUMBER OF SHORT FLASHES AND THE SECOND DIGIT IS THE NUMBER OF LONG FLASHES.**

**LED ACTIVITY (CFH = Call for Heat)**

11 NO PREVIOUS CODE - Stored status codes are erased automatically after 72 hours or as specified above.

12 BLOWER ON AFTER POWER UP (115VAC or 24VAC) - Blower runs for 90 seconds, if unit is powered up during a call for heat (R-W closed) or (R-W opens) during a blower on-delay period.

13 LIMIT CIRCUIT LOCKOUT - Lockout occurs if a limit, draft safeguard, burner thermal switch or blocked vent switch (if used) is open. Control will auto-reset after three hours. Check for:
- Loose blower wheel
- Restricted vent
- Proper vent sizing
- Excess wind
- Dirty filter or restricted duct system
- Defective switch or connections
- Inadequate combustion air supply (Burner thermal switch open)

14 IGNITION LOCKOUT - Control will auto-reset after three hours. Refer to status code #34.

21 GAS HEATING LOCKOUT - Control will NOT auto-reset. Check for:
- Mis-wired gas valve
- Defective control (valve relay)
- 24VAC sensed at gas valve when should not be present

22 ABNORMAL FLAME - PROVING SIGNAL - Flame is provided while gas valve is de-energized, inducer will run until fault is cleared. Check for:
- Leaky gas valve
- Stuck-open gas valve

23 PRESSURE > 0.15" w.c. AT START-UP. Check for:
- Obstruction in pressure tubing or Transducer vent holes
- Defective Transducer
- Transducer wiring

24 SECONDARY VOLTAGE FUSE IS OPEN. Check for:
- Short circuit in secondary voltage (24VAC) wiring

25 INVALID MODEL SELECTION OR SETUP ERROR - Indicated either the model plug is missing or incorrect. If code flashes 4 times on power-up control is defaulting to model selection stored in memory

31 PRESSURE TRANSDUCER INPUT DOES NOT SENSE TARGET PRESSURE OR PRESSURE IS OUT OF RANGE. Check for:
- Excessive wind
- Proper vent sizing
- Restricted vent
- Defective inducer motor
- Inadequate combustion air supply
- Defective pressure transducer
- Low inlet gas pressure (if LGPS used)
- Low inducer voltage (115VAC)
- Disconnected or obstructed pressure tubing

34 IGNITION PROVING FAILURE - Control will try ignition four times before lockout #14 occurs. If flame signal lost during blower on-delay period, blower will come on for the selected blower off-delay. Check for:
- Oxide buildup on flame sensor (clean with fine steel wool)
- Proper flame sense microamps (.5 microamps D.C. Min., 4.0 - 6.0 nominal)
- Manual valve shut-off
- Low inlet gas pressure
- Control ground continuity
- Gas valve defective or turned off
- Flame sensor must not be grounded or touching casing
- Inadequate flame carryover or rough ignition
- Green/Yellow wire MUST be connected to furnace sheet metal

42 INDUCER MOTOR FAULT the RPM pulses are not detected from the inducer motor within 20 seconds after a heat request, the inducer is outside of its valid range of operation, or the inducer RPM signal was lost for 5 seconds during operation. Check for:
- Proper vent sizing
- Restricted combustion air supply
- Failed inducer motor
- Improper or loose motor wiring or bad connection

45 CONTROL CIRCUITARY LOCKOUT Auto-reset after one hour lockout due to:
- Gas valve relay stuck open
- Flame sense circuit failure
- Software check error

Reset power to clear lockout. Replace control if status code repeats.

## COMPONENT TEST

To initiate the component test sequence, shut OFF the room thermostat or disconnect the "R" thermostat lead. Briefly short the TEST/TWIN terminal to the "C" terminal. Status LED will flash most recent code 4 times and then turn ON the inducer motor.

The inducer motor will run for the entire component test. The hot surface igniter, blower motor fan speed, blower motor-heat speed, and blower motor-cool speed will be turned ON for 10-15 seconds each. Gas Valve and Humidifier will not be turned on.

| LED CODES | STATUS |
|---|---|
| 11 | Indicated the blower motor tested OK. Visual check of inducer motor and hot surface igniter required. |
| 25 | SETUP ERROR - Reference code 25 on left |
| 42 | INDUCER MOTOR FAULT - Indicates inducer motor failed test. Check inducer, wiring, furnace control and tubing for poor connections |

# PARTS REPLACEMENT INFORMATION GUIDE

**CASING GROUP**

Outer door
Blower door
Top filler plate
Bottom filler plate
Bottom enclosure

**ELECTRICAL GROUP**

Control bracket
Junction box
Limit switch(es)
Circuit board
Door switch
Transformer
Wiring harness 115v
Wiring harness 24v

**BLOWER GROUP**

Blower housing
Blower cutoff
Blower motor
Blower wheel
Grommet
Power choke (where used)
Auxiliary limit switches

**GAS CONTROL GROUP**

Burner assembly
Orifice
Flame sensor
Hot surface ignitor
Gas valve
Manual reset limit switches
Burner support assembly

**HEAT EXCHANGER GROUP**

Heat exchanger cell
Cell panel

**INDUCER GROUP**

Housing assembly
Transducer
Inducer motor
Inducer wheel
Vent elbow assembly

**TO OBTAIN INFORMATION ON PARTS:** Consult your installing dealer or classified section of your local telephone directory under "Heating Equipment" or "Air Conditioning Contractors and Systems" headings for dealer listing by brand name or contact:

**PAYNE HEATING & COOLING**
Consumer Relations Department
P.O. Box 4952
Syracuse, New York 13221-4952
1-800-417-2963

Have available the model number, series number, and serial number located on the unit rating plate to ensure correct replacement part.

**Example of Model Number**

| MODEL | COOLING CAPACITY | HEATING CAPACITY | WIDTH | SERIES | VARIATIONS |
|---|---|---|---|---|---|
| PG80ESUA | 48 | 060 | A | A | A |

Copyright 2019 Payne Heating & Cooling • 7310 W. Morris St. • Indianapolis, IN 46206
Edition Date: 1/2020
Catalog No: IM-PG80ESU-06
Replaces: IM-PG80ESU-05
Manufacturer reserves the right to change, at any time, specifications and designs without notice and without obligations.