bryant
Heating & Cooling Systems

4-Way Multipoise Induced Combustion Gas Furnace

312AAV/312JAV

Sizes 045 thru 155
Series A

Preferred™ SERIES

Perfect Heat™

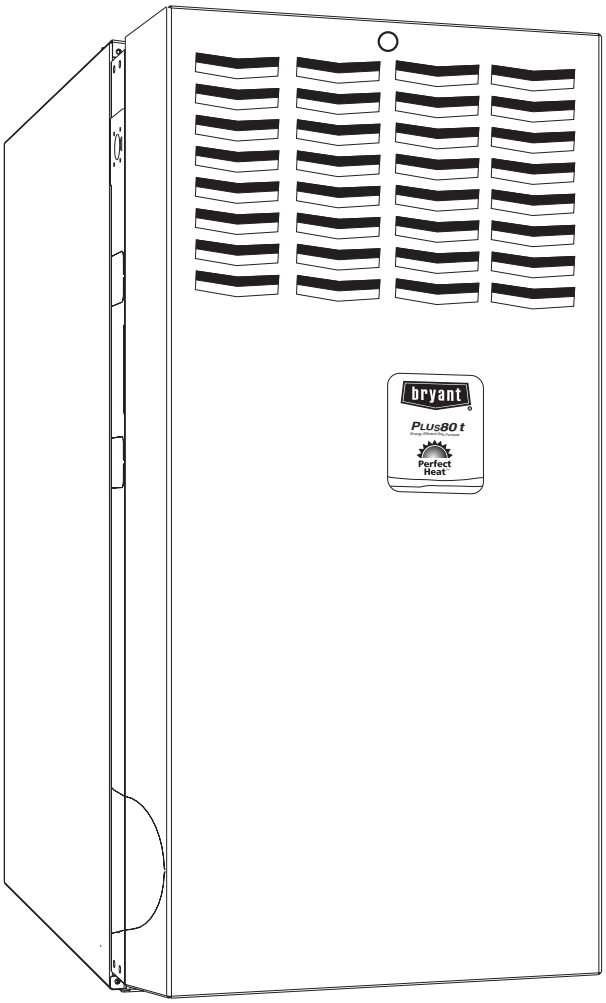

A04139

ISO 9001:2000

The Plus 80t Two-stage 4-way Multipoise Gas Furnace offers outstanding comfort in an 80% AFUE furnace. You get the benefits of Perfect Heat™: reduced drafts, reduced sound levels, longer cycles, less temperature swings between cycles, less temperature differences between rooms, and improved indoor air quality. Plus, it features a dehumidify mode and the ability to change continuous fan speeds from the thermostat. The 312AAV/JAV furnaces are approved for use with natural or propane gas, and the 312JAV is approved for use in Low NOx Air Management Districts.

STANDARD FEATURES

- Superdehumidify mode for maximum humidity control
- Perfect Heat™ operation
  Two-stage heating even with single-stage thermostat-patented Adaptive Control Technology
  Reduced operating sound through low-stage operation and sound elimination combustion system
- Noise elimination combustion system
- SmartEvap™ can lower the humidity level in the home by nearly 10 percent
- Four-position furnace: Upflow, Horizontal Right, Horizontal Left, Downflow
  Thirteen different vent options
- Compact design only 33-1/3-in. tall
- Media Filter Cabinet included
- Washable filter included
- Microprocessor based “smart” control center
  Fan on *Plus*™ -Continuous Fan speed adjustable from thermostat
  Adjustable heating air temperature rise
  Adapts heating stages to meet demand
  Dehumidify mode
  LED diagnostics, non-volatile fault code memory, and self test feature
  On-board fuse for transformer protection
- Patented blocked vent safeguard to ensure proper furnace venting
- Insulated blower compartment
- Heat Pump compatible
- All models are Chimney Friendly when used with accessory vent kit
- Twinning in Upflow, Downflow and Horizontal
- Hot surface ignition (HSI)
- Residential installations eligible for consumer financing through the Comfort Credit Program

LIMITED WARRANTY

- 20-year warranty on “Super S™” heat exchanger
- 5-year parts warranty on all other components

CERTIFIED ®

DESIGN CERTIFIED ®

QMI REGISTERED

EFFICIENCY RATING CERTIFIED Gama

MEETS DOE RESIDENTIAL CONSERVATION SERVICES PROGRAM STANDARDS.

Before purchasing this appliance, read important energy cost and efficiency information available from your retailer.

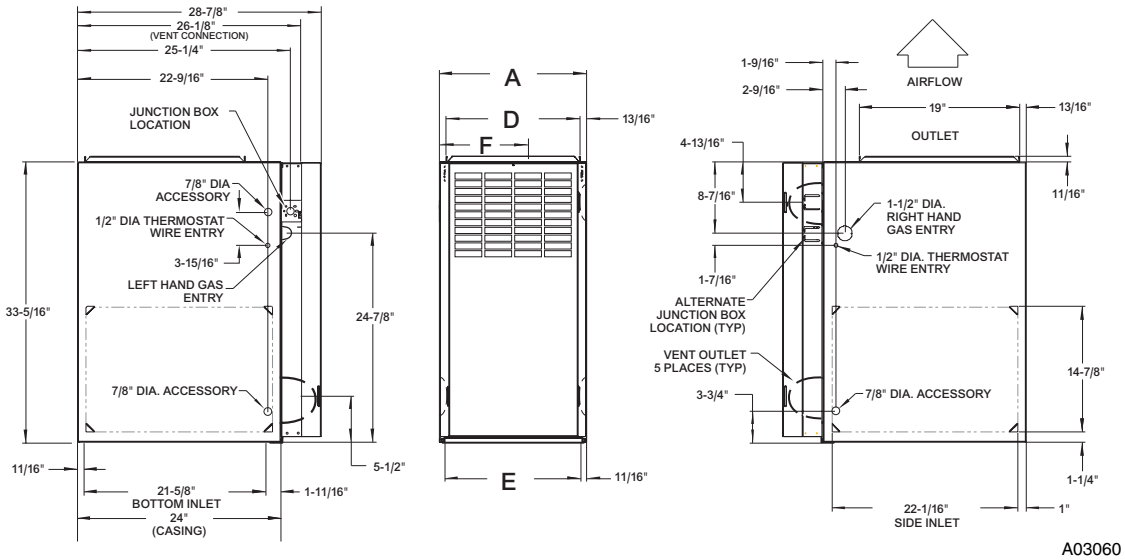

NOTES:
1. Two additional 7/8-in. dia knockouts are located in the top plate.
2. Minimum return-air openings at furnace, based on metal duct. If flex duct is used, see flex duct manufacturers recommendations for equivalent diameters.
3. Minimum return-air opening at furnace:
   a. For 800 CFM-16-in. round or 14-1/2 x 19-1/2-in. rectangle.
   c. For 1600 CFM-22-in. round or 14-1/2 x 22-1/16-in. rectangle.
   d. For Airflow requirements above 1800 CFM, see Air Delivery table in Product Data literature for specific use of single side inlets. The use of both side inlets, a combination of 1 side and the bottom, or the bottom only will ensure adequate return air openings for airflow requirements above 1800 CFM.

312AAV/312JAV UNIT SIZE	A (CABINET WIDTH)	D (SUPPLY WIDTH)	E (BOTTOM RETURN WIDTH)	F (C.L. TOP & BOTTOM VENT OUTLET)	VENT CONNECTION SIZE (see notes 1 & 2)	SHIPPING WEIGHT	MEDIA CABINET SIZE
024045	14-3/16	12-9/16	12-11/16	9-5/16	4	116	16
036045	14-3/16	12-9/16	12-11/16	9-5/16	4	119	16
024070	14-3/16	12-9/16	12-11/16	9-5/16	4	120	16
036070	14-3/16	12-9/16	12-11/16	9-5/16	4	124	16
048070	17-1/2	15-7/8	16-1/8	11-9/16	4	138	16
042090	17-1/2	15-7/8	16-1/8	11-9/16	4	136	16
048090	21	19-3/8	19-1/2	13-5/16	4	151	20
060090	21	19-3/8	19-1/2	13-5/16	4	156	20
036110	17-1/2	15-7/8	16-1/8	11-9/16	4	144	16
048110	21	19-3/8	19-1/2	13-5/16	4	158	20
066110	21	19-3/8	19-1/2	13-5/16	4	163	20
048135	21	19-3/8	19-1/2	13-5/16	4 (note 1)	163	20
066135	24-1/2	22-7/8	23	15-1/16	4 (note 1)	174	24
060155	24-1/2	22-7/8	23	15-1/16	4 (note 1)	181	24

NOTES
1) 135 and 155 size furnaces require five-inch vents. Use a 4-5 in. vent adapter between furnace and vent stack.
2) See Installation Instructions for complete installation requirements.

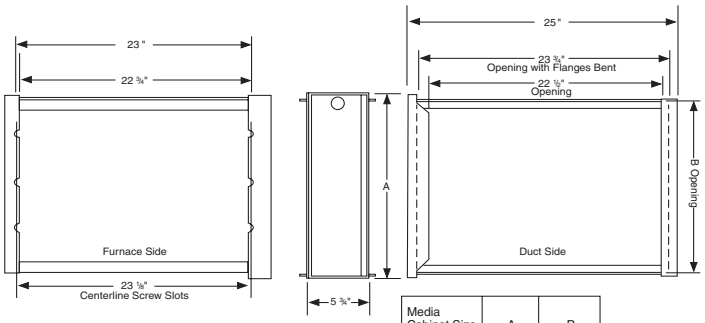

Media Cabinet Size	A	B
16	17"	16"
20	21"	20"
24	25"	24"

INSTALLATION

MINIMUM INCHES CLEARANCE TO COMBUSTIBLE CONSTRUCTION
DISTANCE MINIMALE EN POUCES AUX CONSTRUCTIONS COMBUSTIBLES

This forced air furnace is equipped for use with natural gas at altitudes 0-10,000 ft (0-3,050m).

An accessory kit, supplied by the manufacturer, shall be used to convert to propane gas use or may be required for some natural gas applications.

This furnace is for indoor installation in a building constructed on site.

This furnace may be installed on combustible flooring in alcove or closet at minimum clearance as indicated by the diagram from combusitble material.

This furnace may be used with a Type B-1 Vent and may be vented in common with other gas fired appliances.

Cette fournaise à air pulsé est équipée pour utilisation avec gaz naturel et altitudes comprises entre 0-3,050m (0-10,000 pi).

Utiliser une trousse de conversion, fournie par le fabricant, pour passer au gaz propane ou pour certaines installations au gaz naturel.

Cette fournaise est prévue pour être installée dans un bâtiment construit sur place.

Cette fournaise peut être installée sur un plancher combustible dans une alcôve ou dans un garde-robe en respectant le minimum d'espace libre des matériaux combustibles, tel qu´indiqué sur le diagramme.

Cette fournaise peut être utilisée avec un conduit d´évacuation de Type B-1 ou connectée au conduit ommun d 'autres appareils à gaz.

This furnace is approved for UPFLOW, DOWNFLOW, and HORIZONTAL installations.

Cette fournaise est approuvée pour l 'installation HORIZONTALE et la circulation d 'air VERS LE HAUT et VERS LE BAS.

Clearance arrows do not change with furnace orientation.

Les fléches de dégagement ne change pas avec l 'orientation de la fournaise.

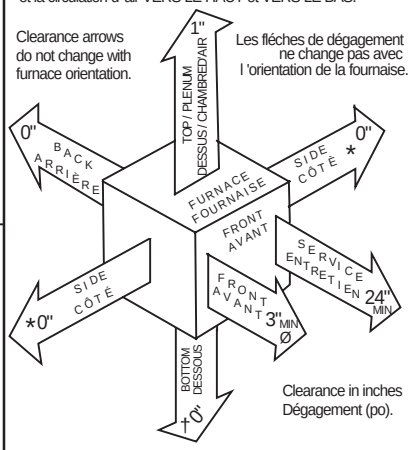

Clearance in inches
Dégagement (po).

Vent Clearance to combustibles:
For Single Wall vents 6 inches (6 po).
For Type B-1 vent type 1 inch (1 po).

Dégagement de l´évent avec combustibles:
Pour conduit d´évacuation à paroi simple 6 po (6 inches).
Pour conduit d´évacuation de Type B-1 1 po (1 inch).

MINIMUM INCHES CLEARANCE TO COMBUSTIBLE CONSTRUCTION

DOWNFLOW POSITIONS:

† Installation on non-combusibible floors only.
For Installation on combustible flooring only when installed on special base, Part No. KGASB0201ALL, Coil Assembly, Part No. CD5 or CK5, or Coil Casing, Part No. KCAKC.

Ø 18 inches front clearance required for alcove.

* Indicates supply or return sides when furnace is in the horizontal position. Line contact only permissible between lines formed by intersections of the Top and two Sides of the furnace jacket, and building joists, studs or framing.

DÉGAGEMENT MINIMUM EN POUCES AVEC ÉLÉMENTS DE CONSTRUCTION COMBUSTIBLES

POUR LA POSITION COURANT DESCENDANT:

† Pour l´installation sur plancher non combustible seulement.
Pour l´installation sur un plancher combustible seulement quand on utilise la base spéciale, pièce nº KGASB0201ALL, l´ensemble serpentin, pièce nº CD5 ou CK5, ou le carter de serpentin, pièce nº KCAKC.

Ø Dans une alcôve, on doit maintenir un dégagement à l´avant de 18 po (450mm).

* La poistion indiquée concerne le côté d´entrée ou de retour quand la fournaise est dans la position horizontale.
Le contact n´est permis qu´entre les lignes formées par les intersections du dessus et des deux côtés de la cherrise de la fournaise et les solives, montant sous cadre de charpente.

327590-101 REV. C

SPECIFICATIONS

UNIT SIZE			024045	036045	024070	036070	048070	042090	048090
RATINGS AND PERFORMANCE									
Input Btuh* Nonweatherized ICS	312JAV Upflow; all 312AAV	- High	44,000	44,000	66,000	66,000	66,000	88,000	88,000
		- Low	29,000	29,000	43,500	43,500	43,500	58,000	58,000
	312JAVDownflow/Horizontal	- High	42,000	42,000	63,000	63,000	63,000	84,000	84,000
		- Low	29,000	29,000	43,500	43,500	43,500	58,000	58,000
Output Capacity (Btuh)† Nonweatherized ICS	312JAV Upflow; all 312AAV	- High	35,000	36,000	54,000	54,000	53,000	71,000	71,000
		- Low	23,000	23,000	36,000	36,000	35,000	47,000	47,000
	312JAVDownflow/Horizontal	- High	34,000	34,000	51,000	51,000	51,000	68,000	68,000
		- Low	23,000	23,000	36,000	36,000	35,000	47,000	47,000
AFUE†			80.0	80.0	80.0	80.0	80.0	80.0	80.0
Certified Temperature Rise Range °F		- High	30-60	20-50	40-70	30-60	25-55	40-70	30-60
		- Low	20-50	15-45	30-60	30-60	15-45	25-55	25-55
Certified External Static Pressure		Heat/Cool	0.10/0.50	0.10/0.50	0.12/0.50	0.12/0.50	0.12/0.50	0.15/0.50	0.15/0.50
Airflow CFM‡		Heating High/Low	820/725	1030/860	790/685	885/695	1570/1045	1375/1195	1265/1030
		Cooling	895	1175	955	1240	1605	1385	1755
ELECTRICAL									
Unit Volts—Hertz—Phase			115-60-1						
Operating Voltage Range*		Min-Max	104-127						
Maximum Unit Amps			5.3	7.1	5.2	7.3	10.1	8.2	9.9
Maximum Wire Length (Measure 1 Way in Ft)			49	38	51	37	27	34	28
Minimum Wire Size			14						
Maximum Fuse or Ckt Bkr Size (Amps)**			15						
Transformer (24v)			40va						
External Control Power Available		Heating	12va						
		Cooling	35va						
Air Conditioning Blower Relay			Standard						
CONTROLS									
Limit Control			SPST						
Heating Blower Control			Solid-State Time Operation						
Burners (Monoport)			2	2	3	3	3	4	4
Gas Connection Size			1/2-in. NPT						
GAS CONTROLS									
Gas Valve (Redundant)			White Rodgers						
		Min Inlet Pressure (In. wc)	4.5 (Natural Gas)						
		Max Inlet Pressure (In. wc)	13.6 (Natural Gas)						
Ignition Device			Hot Surface						
Factory-installed orifice			Size 43						
BLOWER DATA									
Direct-Drive Motor HP (PSC)			1/5	1/3	1/5	1/3	1/2	1/3	1/2
Motor Full Load Amps			2.8	5.1	2.8	5.1	7.4	5.2	7.4
RPM (Nominal)-Speeds			1075-4	1075-5	1075-4	1075-5	1075-5	1075-4	1075-5
Blower Wheel Diameter x Width (in.)			10 x 6	10 x 6	10 x 6	10 x 6	11 x 8	10 x 8	10 x 10

* Gas input ratings are certified for elevations to 2000 ft. For elevations above 2000 ft, reduce ratings 4 percent for each 1000 ft above sea level. Refer to National Fuel Gas Code Table F4 or furnace installation instructions. In Canada, derate the unit 10 percent for elevations 2000 ft to 4500 ft above sea level.

† Capacity in accordance with U.S. Government DOE test procedures.

‡ Airflow shown is for bottom only return-air supply for the as-shipped speed tap. For air delivery above 1800 CFM, see Air Delivery table for other options. A filter is required for each return-air supply. An airflow reduction of up to 7% may occur when using the factory-specified 4-5/16 inch wide, high efficiency media filter.

** Time-delay type is recommended.

ICS Isolated Combustion System

SPECIFICATIONS continued

UNIT SIZE			060090	036110	048110	066110	048135	066135	060155
RATINGS AND PERFORMANCE									
Input Btuh* Nonweatherized ICS	312JAV Upflow; all 312AAV	- High	88,000	110,000	110,000	110,000	132,000	132,000	154,000
		- Low	58,000	72,500	72,500	72,500	87,000	87,000	101,500
	312JAVDownflow/Horizontal	- High	84,000	105,000	105,000	105,000	126,000	126,000	147,000
		- Low	58,000	72,500	72,500	72,500	87,000	87,000	101,500
Output Capacity (Btuh)† Nonweatherized ICS	312JAV Upflow; all 312AAV	- High	71,000	89,000	89,000	89,000	107,000	107,000	124,000
		- Low	47,000	59,000	59,000	59,000	70,000	70,000	82,000
	312JAVDownflow/Horizontal	- High	68,000	85,000	85,000	85,000	102,000	102,000	119,000
		- Low	47,000	59,000	59,000	59,000	70,000	70,000	82,000
AFUE†			80.0	80.0	80.0	80.0	80.0	80.0	80.0
Certified Temperature Rise Range °F		- High	25-55	50-80	40-70	30-60	50-80	40-70	45-75
		- Low	15-45	30-60	25-55	20-50	30-60	25-55	30-60
Certified External Static Pressure		Heat/Cool	0.15/0.50	0.20/0.50	0.20/0.50	0.20/0.80	0.20/0.50	0.20/0.50	0.20/0.50
Airflow CFM‡		Heating High/Low	1580/1325	1335/1180	1290/1045	1555/1295	1525/1320	1865/1640	1790/1565
		Cooling	2005	1355	1695	2200	1710	2110	2230
ELECTRICAL									
Unit Volts—Hertz—Phase			115-60-1						
Operating Voltage Range		Min-Max	104-127						
Maximum Unit Amps			12.9	8.2	10.1	13.7	10.2	14.5	15.0
Maximum Wire Length (Measure 1 Way in Ft)			34	34	28	32	27	30	29
Minimum Wire Size			12	14		12	14	12	
Maximum Fuse or Ckt Bkr Size (Amps)**			20	15		20	15	20	
Transformer (24v)			40va						
External Control		Heating	12va						
Power Available		Cooling	35va						
Air Conditioning Blower Relay			Standard						
CONTROLS									
Limit Control			SPST						
Heating Blower Control			Solid-State Time Operation						
Burners (Monoport)			4	5	5	5	6	6	7
Gas Connection Size			1/2-in. NPT						
GAS CONTROLS									
Gas Valve (Redundant)			White Rodgers						
		Min Inlet Pressure (In. wc)	4.5 (Natural Gas)						
		Max Inlet Pressure (In. wc)	13.6 (Natural Gas)						
Ignition Device			Hot Surface						
Factory-installed orifice			Size 43						
BLOWER DATA									
Direct-Drive Motor HP (PSC)			3/4	1/3	1/2	3/4	1/2	3/4	3/4
Motor Full Load Amps			11.0	5.2	7.4	11.0	7.9	11.1	11.1
RPM (Nominal)-Speeds			1075-5	1075-4	1075-5	1075-5	1075-4	1075-4	1075-4
Blower Wheel Diameter x Width (in.)			11 x 11	10 x 8	10 x 10	11 x 11	10 x 10	11 x 11	11 x 11

* Gas input ratings are certified for elevations to 2000 ft. For elevations above 2000 ft, reduce ratings 4 percent for each 1000 ft above sea level. Refer to National Fuel Gas Code Table F4 or furnace installation instructions. In Canada, derate the unit 10 percent for elevations 2000 ft to 4500 ft above sea level.
† Capacity in accordance with U.S. Government DOE test procedures.
‡ Airflow shown is for bottom only return-air supply for the as-shipped speed tap. For air delivery above 1800 CFM, see Air Delivery table for other options. A filter is required for each return-air supply. An airflow reduction of up to 7 percent may occur when using the factory-specified 4-5/16 in. wide, high efficiency media filter.
** Time-delay type is recommended.
ICS Isolated Combustion System

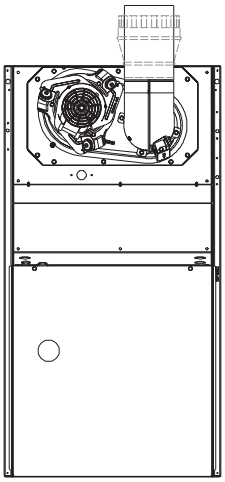

SEE NOTES: 1,2,4,7,8,9

UPFLOW

A02058

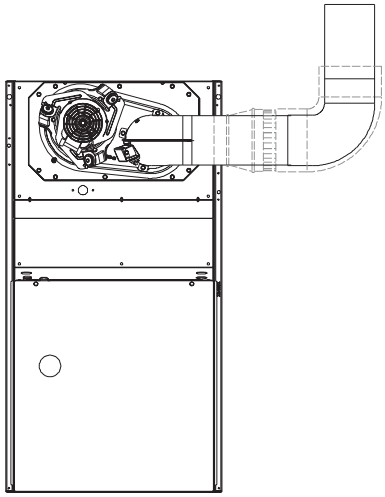

SEE NOTES: 1,2,3,4,7,8,9

UPFLOW

A02059

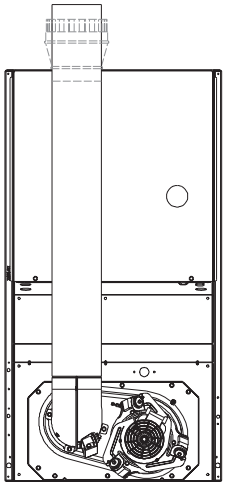

SEE NOTES: 1,2,4,5,7,8,9

DOWNFLOW

A02061

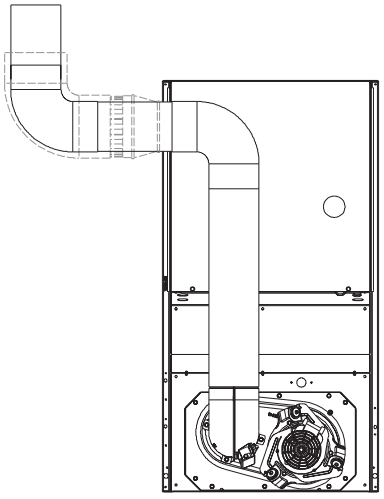

SEE NOTES:1,2,3,4,5,7,8,9

DOWNFLOW

A02060

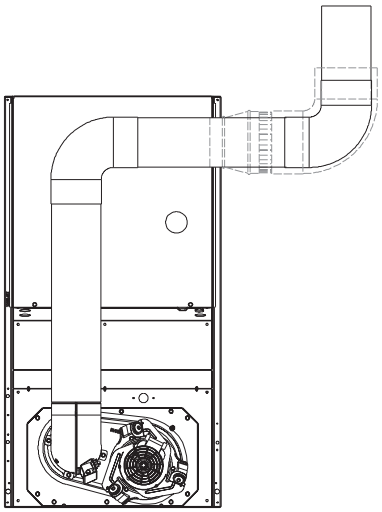

SEE NOTES: 1,2,3,4,5,7,8,9

DOWNFLOW

A02063

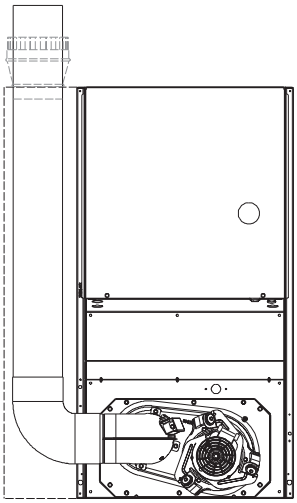

SEE NOTES: 1,2,4,5,6,7,8,9

DOWNFLOW

A02062

Venting Notes

1. For common vent, vent connector sizing and vent material: United States, latest edition of the National Fuel Gas Code (NFGC), ANSI Z223.1/NFPA 54. In Canada, latest edition of the National Standards of Canada, Natural Gas and Propane Installation Code (NSCNGPIC), CSA B149.1-00.
2. Immediately increase to 5-in. vent connector outside furnace casing when 5-in. vent connector required, refer to Note 1.
3. Side outlet vent for upflow and downflow installations must use Type B vent immediately after exiting the furnace, except when KGAVG0101DFG is used in downflow position.
4. Type B vent where required, refer to Note 1.
5. 4 in. single wall vent must be used inside furnace casing and the KGAVG0101DFG Downflow Vent Guard Kit.
6. Accessory Downflow Vent Guard Kit, KGAVG0101DFG required in downflow installations with bottom vent configuration.
7. Chimney Adapter Kit required for exterior masonry chimney applications. Refer to Chimney Adapter Kit, KGACA02014FC and KGACA02015FC for sizing and complete application details.
8. Secure vent connector to furnace elbow with (2) corrosion-resistant sheet metal screws, space approximately 180° apart.
9. Secure all other single wall vent connector joints with (3) corrosion-resistant screws spaced approximately 120° apart. Secure Type B vent connectors per vent connector manufacturer's recommendations.

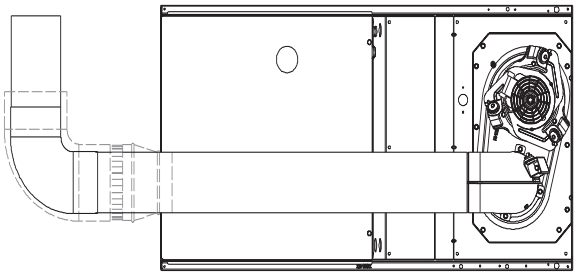

SEE NOTES: 1,2,4,5,7,8,9
HORIZONTAL RIGHT

A02068

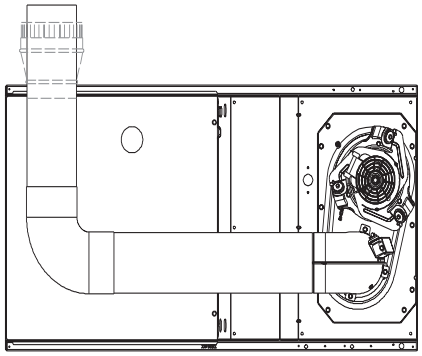

SEE NOTES: 1,2,4,5,7,8,9
HORIZONTAL RIGHT

A02070

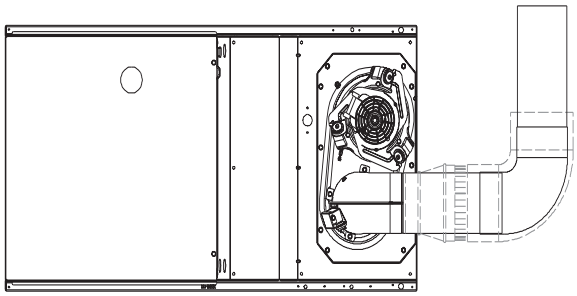

SEE NOTES: 1,2,4,7,8,9
HORIZONTAL RIGHT

A02069

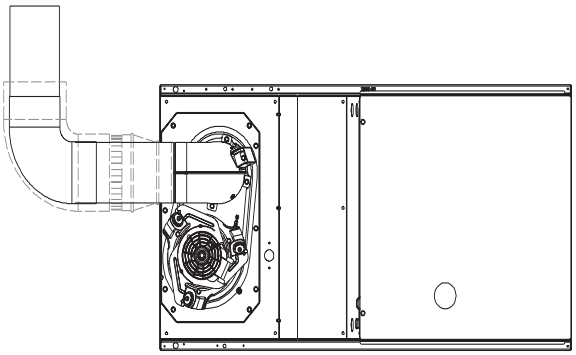

SEE NOTES: 1,2,4,7,8,9
HORIZONTAL LEFT

A02064

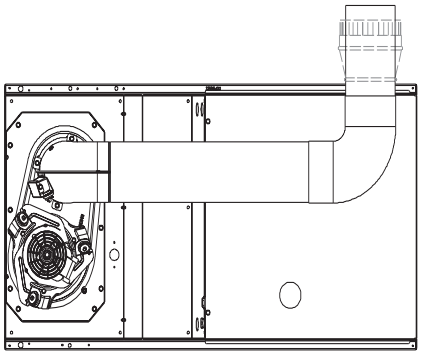

SEE NOTES: 1,2,4,5,7,8,9
HORIZONTAL LEFT

A02065

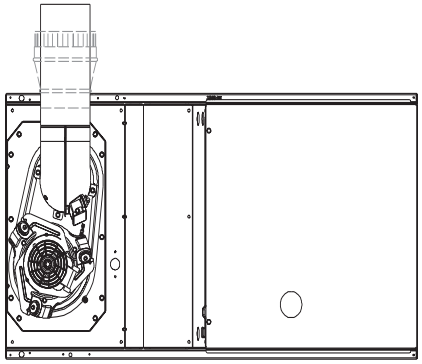

SEE NOTES: 1,2,4,5,7,8,9
HORIZONTAL LEFT

A02066

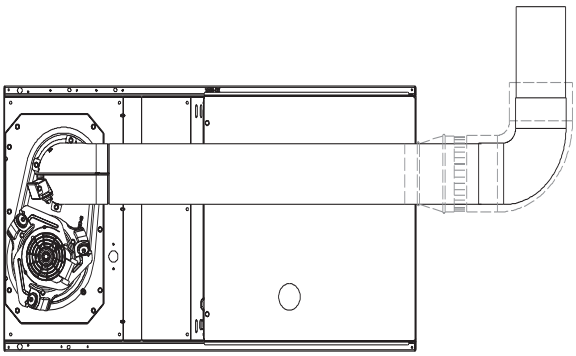

SEE NOTES: 1,2,4,5,7,8,9
HORIZONTAL LEFT

A02067

ACCESSORIES

312AAV/JAV ACCESSORY	PART NO.	024045	036045	024070	036070	048070	042090	048090	060090	036110	048110	066110	048135	066135	060155
Cartridge Media Filter	FILBBCAR0016	X	X	X	X	X	X			X					
	FILBBCAR0020							X	X		X	X	X		
	FILBBCAR0024													X	X
EZ Flex Media Filter with End Caps	EXPXXUNV0016	X	X	X	X	X	X			X					
	EXPXXUNV0020							X	X		X	X	X		
	EXPXXUNV0024													X	X
Replacement EZ Flex Filter Media	EXPXXFIL0016	X	X	X	X	X	X			X					
	EXPXXFIL0020							X	X		X	X	X		
	EXPXXFIL0024													X	X
External Bottom Return Filter Rack	KBAFR0401B14	X	X	X	X										
	KGAFR0501B17					X	X			X					
	KGAFR0601B21	X	X	X	X	X	X			X					
	KGAFR0701B24							X	X		X	X	X		
External Side Return Filter Rack	KGAFR0801SRE	X	X	X	X	X	X	X	X	X	X	X	X	X	X
Unframed Filter 1-in.	KGAWF1306UFR	X	X	X	X	X	X	S†	S†	X	S†	S†	S†	S†	S†
	KGAWF1406UFR							X	X		X	X	X		
	KGAWF1506UFR													X	X
Flue Extension	KGAFE0112UPH	X	X	X	X	X	X	X	X	X	X	X	X	X	X
Twinning Kit	KGATW0601HSI	X	X	X	X	X	X	X	X	X	X	X	X	X	X
Combustible Floor Base	KGASB0201ALL	X	X	X	X	X	X	X	X	X	X	X	X	X	X
Downflow Vent Guard	KGAVG0101DFG	X	X	X	X	X	X	X	X	X	X	X	X	X	X
Vent Extension Kit	KGAVE0101DNH	X	X	X	X	X	X	X	X	X	X	X	X	X	X
Chimney Adapter Kit	KGACA02014FC	X	X	X	X	X	X	X	X	X	X	X			
Chimney Adapter Kit	KGACA02015FC												X	X	X
Natural-to-Propane Conversion Kit*	KGANP3001ALL	X	X	X	X	X	X	X	X	X	X	X	X	X	X
Propane-to-Natural Conversion Kit	KGAPN2301ALL	X	X	X	X	X	X	X	X	X	X	X	X	X	X
Label Kit	KGALB0101KIT	X	X	X	X	X	X	X	X	X	X	X	X	X	X
Gas Orifice Kit (Qty 50)	KGAHA0150N42	See Installation Instructions for model, altitude, and heat value usages													
	KGAHA0250N43 (factory supplied)														
	KGAHA0350N44														
	KGAHA0450N45														
	KGAHA0550N46														
	KGAHA1550N47														
	KGAHA1650N48														
	KGAHA0650P54														
	KGAHA0750P55														
UV Lights	Model UVL														
Heat/Energy Recovery Ventilator	Models HRV or ERV														
Humidifier	Model HUM														
Electronic or Mechanical Air Cleaner	Model EACA, EZXCAB, or FILCAB														

* Factory-authorized and field installed. Gas conversion kits are CSA (A.G.A. and C.G.A.) recognized.

† Suitable for side return.

CONTROLS-THERMOSTATS AND ZONING

DESCRIPTION	PART NO.
NON-PROGRAMMABLE	
For use with 1-speed Air Conditioner - deg. F/C, Auto Changeover	TSTATBBNAC01-B
For use with 1-speed Air Conditioner - deg. F/C, Auto Changeover	TSTATBBNHP01-B*
For use with 2-speed Air Conditioner - deg. F/C, Auto Changeover	TSTATBBN2S01-B*
For use with multi-use / stage configurations - deg. F/C, Auto Changeover/Temperature and Humidity Control	TSTATBBPRH01-B†
PROGRAMMABLE THERMOSTAT SELECTION	
For use with 1-speed Air Conditioner - deg. F/C, Auto Changeover, 7-Day Programmable	TSTATBBPAC01-B
For use with 1 speed Air Conditioner - deg. F/C, Auto Changeover, 7-Day Programmable	TSTATBBPHP01-B*
For use with 2 speed Air Conditioner - deg. F/C, Auto Changeover, 7-Day Programmable	TSTATBBP2S01-B*
For use with 1-speed Air Conditioner - deg. F/C, 5-2 Day Programmable	TSTATBBSAC01
For use with multi-stage applications - deg. F/C, Auto Changeover, 7-Day Programmable	TSTATBBPDF01-B‡
For multi-use / stage configurations - deg. F/C, Auto Changeover, 7-Day Programmable/Temperature and Humidity Control	TSTATBBPRH01-B†
ZONING CONTROL SELECTION	
Zone Perfect 2-Zone kit	ZONEKIT2ZBDP
Zone Perfect *Plus* 2-Zone kit/Temperature and Humidity Control	ZONEBB2KIT01-B
Zone Perfect *Plus* 4-Zone kit/Temperature and Humidity Control	ZONEBB4KIT01-B
Zone Perfect *Plus* 8-Zone kit/Temperature and Humidity control	ZONEBB8KIT01-B

* Model HP and 2S thermostat must be field converted to air conditioner operation.
† Thermidistat Control can be configured for multiple use and stating, it must be configured for each specific application.
‡ Dual Fuel thermostat is used with furnace and heat pump application.

AIR DELIVERY-CFM (With Filter)*

312AAV/JAV UNIT SIZE	RETURN-AIR SUPPLY	SPEED	EXTERNAL STATIC PRESSURE (In. wc)									
			0.1	0.2	0.3	0.4	0.5	0.6	0.7	0.8	0.9	1.0
024045	Bottom or Side(s)	High	1120	1075	1020	960	895	815	720	605	455	340
		Med-High	930	890	850	805	750	680	600	500	345	195
		Med-Low	820	785	750	700	650	585	505	400	235	—
		Low	725	690	655	605	555	495	405	305	—	—
036045	Bottom or Side(s)	High	1465	1400	1325	1250	1175	1085	980	860	725	560
		Med-High	1295	1260	1210	1155	1090	1015	930	830	700	545
		Medium	1150	1120	1085	1040	985	920	835	740	620	510
		Med-Low	1030	1010	980	945	895	835	765	685	570	345
		Low	860	835	810	780	745	700	635	555	445	260
024070	Bottom or Side(s)	High	1140	1105	1055	1010	955	885	815	715	545	390
		Med-High	915	885	855	825	785	725	655	530	420	280
		Med-Low	795	770	740	700	655	600	510	420	325	—
		Low	690	665	630	590	550	475	415	340	245	—
036070	Bottom or Side(s)	High	1440	1400	1355	1300	1240	1170	1090	1000	890	745
		Med-High	1180	1165	1150	1125	1085	1030	970	890	785	645
		Medium	1015	1020	1010	990	965	925	875	800	700	560
		Med-Low	885	885	880	865	845	815	770	700	605	475
		Low	695	700	700	690	670	640	600	540	460	345
048070	Bottom or Side(s)	High	1840	1790	1730	1670	1605	1530	1450	1370	1275	1170
		Med-High	1610	1575	1535	1485	1435	1370	1305	1230	1145	1055
		Medium	1460	1430	1400	1360	1315	1260	1205	1130	1055	965
		Med-Low	1260	1240	1215	1180	1145	1100	1040	985	915	835
		Low	1065	1040	1015	985	955	915	875	825	765	695
042090	Bottom or Side(s)	High	1650	1600	1535	1465	1385	1285	1175	1055	895	645
		Med-High	1515	1485	1440	1380	1300	1220	1115	990	830	600
		Med-Low	1385	1360	1320	1260	1195	1120	1025	915	710	565
		Low	1205	1180	1160	1120	1065	1005	925	810	630	510
048090	Bottom or Side(s)	High	2060	2000	1930	1835	1755	1620	1490	1315	1115	910
		Med-High	1710	1695	1665	1585	1480	1390	1245	1110	955	775
		Medium	1470	1475	1450	1390	1335	1230	1120	1005	855	690
		Med-Low	1260	1265	1245	1225	1165	1090	995	880	750	600
		Low	1030	1025	1020	990	940	890	810	720	615	500
060090	Bottom Only	High	2380	2295	2205	2105	2005	1900	1775	1650	1510	1335
		Med-High	2185	2115	2045	1960	1875	1770	1655	1535	1400	1240
		Medium	1905	1865	1815	1740	1670	1590	1490	1390	1245	1110
		Med-Low	1595	1565	1530	1485	1430	1355	1275	1160	1055	920
		Low	1340	1310	1280	1225	1170	1120	1040	955	850	750
	Both Sides or 1 Side & Bottom	High	2485	2415	2330	2230	2135	2030	1920	1790	1645	1485
		Med-High	2175	2130	2070	2000	1930	1840	1740	1620	1495	1345
		Medium	1845	1815	1770	1720	1655	1580	1500	1395	1270	1090
		Med-Low	1540	1515	1475	1435	1385	1335	1270	1175	1045	915
		Low	1280	1250	1220	1190	1155	1105	1035	945	845	745
	1 Side Only	High	2420	2345	2265	2165	2070	1960	1850	1720	1570	1420
		Med-High	2160	2110	2045	1960	1885	1790	1695	1570	1445	1305
		Medium	1850	1815	1765	1710	1635	1560	1480	1380	1250	1110
		Med-Low	1530	1490	1455	1420	1375	1320	1250	1160	1055	905
		Low	1290	1250	1220	1190	1155	1110	1040	950	835	740
036110	Bottom or Side(s)	High	1625	1575	1515	1445	1355	1260	1165	990	785	595
		Med-High	1510	1470	1415	1355	1285	1185	1070	890	725	530
		Med-Low	1360	1335	1295	1250	1180	1100	985	810	670	475
		Low	1195	1180	1155	1115	1065	980	860	740	605	410
048110	Bottom or Side(s)	High	2055	1990	1910	1815	1695	1575	1425	1230	1090	910
		Med-High	1750	1725	1670	1605	1515	1400	1255	1120	975	785
		Medium	1545	1525	1490	1445	1355	1260	1135	1020	880	750
		Med-Low	1300	1290	1275	1235	1165	1085	1005	895	750	620
		Low	1050	1045	1015	975	935	880	815	715	610	515

* A filter is required for each return-air supply. Airflow performance includes 1 in. washable filter media such as contained in factory-authorized accessory filter rack. To determine airflow performance without this filter, assume an additional .1 available external static pressure.

—Indicates unstable operating conditions.

AIR DELIVERY-CFM (With Filter)* continued

312AAV/JAV UNIT SIZE	RETURN-AIR SUPPLY	SPEED	EXTERNAL STATIC PRESSURE (In. wc)									
			0.1	0.2	0.3	0.4	0.5	0.6	0.7	0.8	0.9	1.0
066110	Bottom Only	High	2530	2460	2380	2285	2200	2085	1970	1835	1695	1545
		Med-High	2225	2190	2135	2075	1995	1910	1805	1695	1565	1430
		Medium	1895	1885	1865	1820	1770	1700	1610	1520	1410	1290
		Med-Low	1565	1555	1535	1505	1465	1410	1350	1265	1175	1050
		Low	1320	1295	1265	1235	1205	1160	1105	1035	950	870
	Both Sides or 1 Side & Bottom	High	—	—	2415	2330	2235	2125	1995	1860	1735	1605
		Med-High	2205	2175	2120	2065	1975	1900	1790	1685	1580	1460
	1 Side-Only	High	2485	2430	2360	2270	2175	2070	1950	1825	1685	1535
		Med-High	2155	2135	2100	2040	1970	1885	1790	1680	1560	1420
		Medium	1830	1830	1810	1780	1730	1665	1595	1505	1395	1275
		Med-Low	1520	1505	1490	1470	1430	1385	1330	1250	1165	1055
		Low	1275	1260	1240	1210	1180	1135	1090	1025	930	840
048135	Bottom or Side(s)	High	2090	2010	1930	1835	1710	1590	1470	1335	1025	835
		Med-High	1790	1755	1705	1640	1550	1465	1360	1210	945	785
		Med-Low	1545	1520	1500	1450	1380	1315	1215	1005	855	670
		Low	1325	1320	1295	1265	1210	1150	995	865	745	540
066135	Bottom Only	High	2485	2400	2310	2215	2110	2000	1880	1725	1535	1355
		Med-High	2195	2150	2090	2000	1920	1825	1720	1565	1405	1255
		Med-Low	1880	1850	1820	1780	1715	1635	1540	1415	1290	1160
		Low	1640	1635	1615	1585	1530	1465	1370	1255	1150	1040
	Both Sides or 1 Side & Bottom	High	—	—	2385	2305	2195	2085	1960	1825	1670	1465
		Med-High	2180	2145	2060	2010	1945	1865	1765	1660	1515	1325
		Med-Low	1880	1850	1820	1780	1715	1635	1540	1415	1290	1160
		Low	1640	1635	1615	1585	1530	1465	1370	1255	1150	1040
	1 Side-Only	High	2320	2250	2155	2055	1970	1855	1725	1600	1450	1280
		Med-High	2125	2065	1995	1910	1815	1710	1610	1490	1340	1175
		Med-Low	1845	1825	1765	1710	1650	1570	1475	1370	1240	1100
		Low	1640	1620	1580	1540	1485	1410	1330	1220	1080	960
060155	Bottom Only	High	2485	2400	2310	2215	2110	2000	1880	1725	1535	1355
		Med-High	2195	2150	2090	2000	1920	1825	1720	1565	1405	1255
		Med-Low	1880	1850	1820	1780	1715	1635	1540	1415	1290	1160
		Low	1640	1635	1615	1585	1530	1465	1370	1255	1150	1040
	Both Sides or 1 Side & Bottom	High	—	—	2375	2285	2200	2105	1995	1870	1730	1570
		Med-High	2155	2135	2095	2040	1975	1895	1790	1685	1550	1400
	1 Side Only	High	—	—	2260	2180	2085	1975	1865	1740	1605	1455
		Med-High	2140	2095	2040	1975	1890	1810	1705	1595	1480	1325

* A filter is required for each return-air supply. Airflow performance includes 1 in. washable filter media such as contained in factory-authorized accessory filter rack. To determine airflow performance without this filter, assume an additional .1 available external static pressure.

—Indicates unstable operating conditions.

SPECIFICATIONS SUBJECT TO CHANGE WITHOUT NOTICE

UNIT MUST BE INSTALLED IN ACCORDANCE
WITH INSTALLATION INSTRUCTIONS

Form: PDS 312A.45.3
Cancels: PDS 312A.45.2

bryant®
Heating & Cooling Systems

© 2004 Bryant Heating & Cooling Systems, 7310 W. Morris St., Indpls., IN 46231

PRINTED IN USA Catalog No. 5231-203 8-04