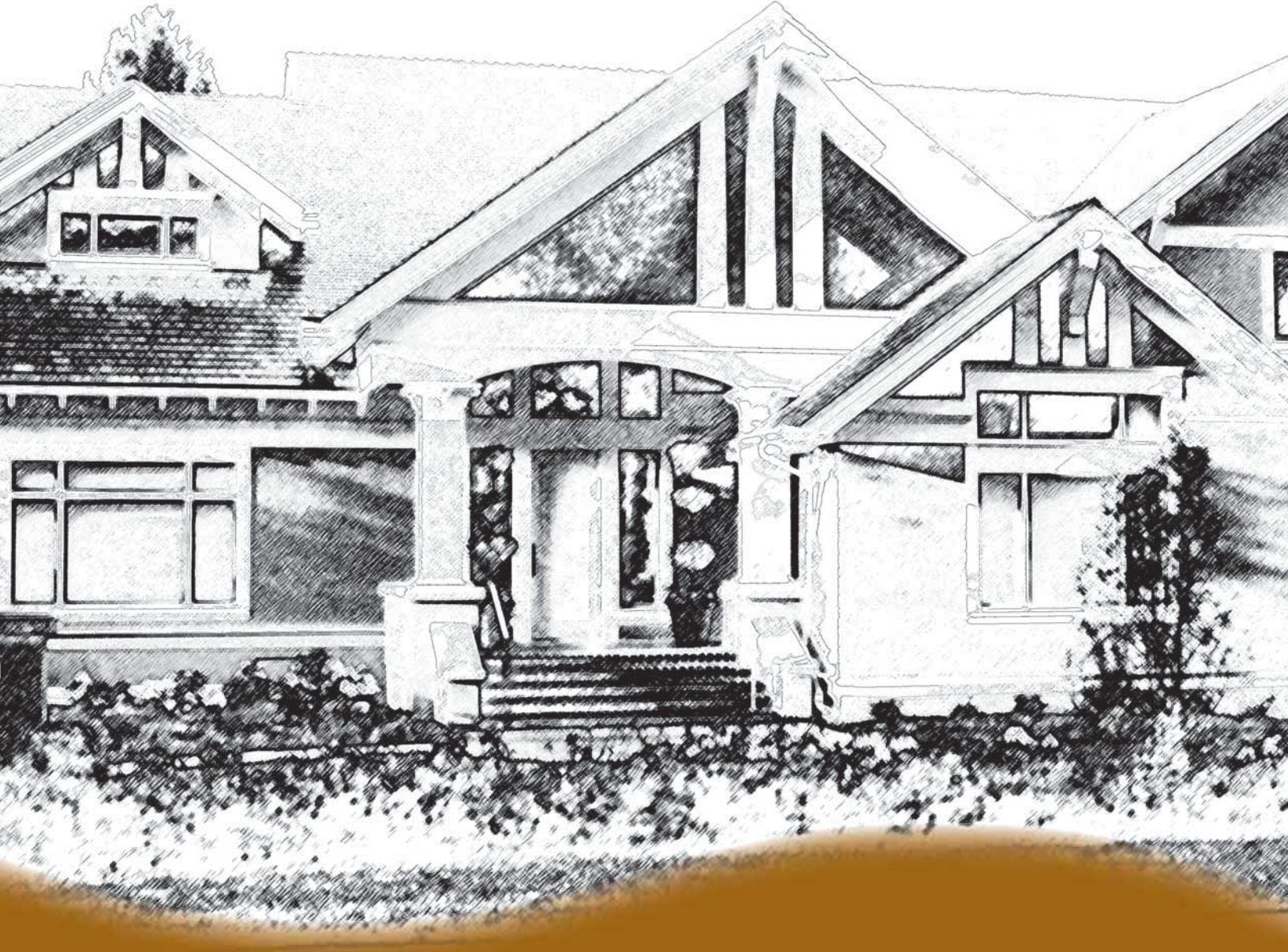

GT-PC (50YG)
Digital Packaged Series

TWO-STAGE DIGITAL
HORIZONTAL, VERTICAL AND DOWNFLOW
PURON® SYSTEMS SIZES 024 - 060 [7.0 - 17.5 kW]

Created October 1, 2012

bryant®
Heating & Cooling Systems

Table of Contents

What's New with Bryant's GT-PC/50YG Digital? 3
Integrated Variable-Speed Water Flow Control 4
Two-Way Communication System 5
How to Use this Catalog 6-7
Design Features 8-10
Unit Model Key 11
AHRI/ISO/ASHRAE 13256-1 12
Reference Calculations & Legend 13
Full Load Correction Factors 14
Part Load Correction Factors 15
Performance Data Selection Notes 16
Performance Data 17-26
Physical Data 27
Dimensions — Vertical Upflow 28-29
Dimensions — Vertical Downflow 30-31
Dimensions — Horizontal 32-33
Standard Electrical Wiring Diagrams 34-37
Electrical Data 38
ECM Control Features 39
Blower Performance Data 40
Auxiliary Heat Ratings 41
Auxiliary Heat Electrical Data 41
Accessories, Options, and Warranty 42
Revision History 44

What's New with Bryant's GT-PC/50YG Digital?

Overview
The GT-PC/50YG Digital is a game-changing new geothermal heat pump that is the first in the industry to integrate digital communicating controls, two-stage capacity, variable-speed fan and variable-flow geothermal source functions within a single compact "Integrated Variable Speed Water Flow Control" package. Available at a breakthrough price point, this innovative product line has been specifically designed and developed for price sensitive, and many times space limited, new home construction and replacement/retrofit applications.

The GT-PC/50YG Digital is a packaged water-to-air system that provides high efficiency heating and cooling and, via an integrated desuperheating package, most of the annual hot water requirement. The eco-friendly GT-PC/50YG Digital already meets ENERGY STAR® Tier 3 efficiency levels, so it will qualify for the uncapped 30% federal geothermal heat pump tax credit in 2012 and beyond. GT-PC/50YG Digital systems are available in vertical and horizontal configurations in nominal capacities of 24, 30, 36, 42, 48 and 60 kBtuh.

Integrated Variable Speed Water Flow Control
Employing the Two-Way Communicating System, GT-PC/50YG Digital brings another feature - Integrated Variable-Speed Water Flow Control. Two-Way Communicating System facilitates intelligent communication between the thermostat, communicating controls and internal water pump/valve to make true variable water flow a reality. Compared to conventional units that can just turn the water-flow on or off, GT-PC/50YG Digital varies the water-flow, which results in significantly lower operating cost and longer system life. Bryant takes ease and speed of installation of geothermal heating and cooling systems to the next level. Integrated Variable-Speed Water Flow Control integrates water-flow control inside the unit.

DXM2 Digital Two-Way Communicating Controls
GT-PC/50YG Digital units also offer optimized comfort, efficiency, and serviceability, utilizing Two-Way Communicating Controls as a standard option with every unit. The digital two-way communicating controls make installation and service of the system easy and effective by allowing monitoring, configuration and diagnosis of the system on a Communicating Digital Thermostat. Furthermore, two-way communication between the intelligent components inside the system ensures precise coordination of operation to achieve optimized comfort AND efficiency. A homeowner can see and give their dealer the fault code and possible causes to help prepare for a service call. Once on the job, a dealer can see what the operating conditions of the unit were at the time of the fault, to help narrow down diagnosis.

Two-Inch MERV 11 Filter
All GT-PC/50YG Digital units include a factory installed 2" filter frame/duct collar with a 2" pleated high efficiency MERV 11 air filter.

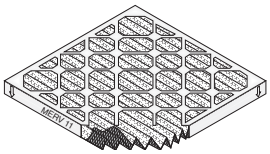

Two-Stage Copeland Scroll Compressor
Achieve a greater level of comfort. The Copeland Scroll UltraTech™ provides superior comfort than fixed-capacity compressors by incorporating a revolutionary two-step design. With a unique 67% part-load capacity step, systems with UltraTech™ maintain precise temperature levels and lower relative humidity. This eliminates uneven peaks and valleys and allows for steady cooling comfort. Homeowners now have a better, more efficient way to power their heating and cooling system, raising their level of comfort, while lowering energy bills. So when your customers need a new heating and cooling system, make sure it has the best technology inside – the Copeland Scroll UltraTech™ compressor.

Learn the beauty of the design. With Copeland Scroll UltraTech™, two internal bypass ports enable the system to run at 67% part-load capacity for better efficiency and humidity control. Based on demand, the modulation ring is activated, sealing the bypass ports and instantly shifting capacity to 100%. Take advantage of "shift on the fly" stage changing (no stopping and starting required like other two-stage compressors).

Easy to Install, Easy to Service – A Technician's Dream Machine
The GT-PC/50YG Digital unit was designed with the technician in mind. From i built-in water flow components that cut down on installation time and space, to easy access panels, to a swing out control panel to refrigerant pressure ports right in the front of the unit, to easy connect water connections... the list goes on and on. The new digital 2-way controls make understanding unit faults significantly easier by displaying information on the thermostat.

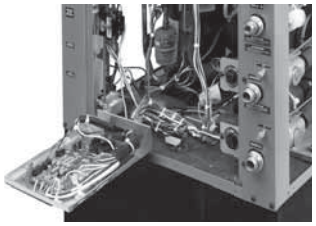

Integrated Variable-Speed Water Flow Control

Integrated Variable-Speed Water Flow Control
Employing the Two-Way Communicating System, GT-PC/50YG Digital is powered Integrated Variable-Speed Water Flow Control. This technology is built inside the unit with intelligent variable speed components, controlled directly by the DXM2 control based on information from the pump and sensors across the system.

Integrated Variable-Speed Water Flow Control delivers three main benefits:
1) Easier and quicker install as the flow control is built in to the unit
2) Superior reliability by varying the water flow to deliver stable operation
3) Higher cost savings by slowing down the flow (and pump watt consumption) to match the unit's mode of operation.

Internal components
GT-PC/50YG can be installed more easily and compactly than its predecessors by building water-flow components internal to the unit. It also saves installing contractors labor and time by eliminating the need to install a bulky external flow regulator or pumping module.

Variable flow
Integrated Variable-Speed Water Flow Control technology enables variable water flow through the unit, with the DXM2 control maintaining entering and leaving water ΔT. Refrigerant pressures are maintained at levels closer to optimal by precisely managing the water flow and thus indirectly the heat of extraction and rejection.

Integrated Variable-Speed Water Flow Control is available for three applications:
1) Closed loop – individual unit pumping: Integrated Variable-Speed Water Flow Control Internal Flow Controller model ("2" in Position 11) would be used. This includes variable speed pump, flushing ports, 3 way flushing valves and expansion tank. Copper water coil is standard with this option.
2) Closed loop – multi unit / central pumping: Integrated Variable-Speed Water Flow Control Internal Motorized Modulating Valve ("5" in Position 11) would be used. Copper water coil is standard with this option.
3) Open loop: Integrated Variable-Speed Water Flow Control Internal Motorized Modulating Valve ("6" in Position 11) would be used. Cupro-Nickel water coil is standard with this option. Valves in open loop models have higher pressure drop than the valves in the closed loop (modulating valve) models for better flow control when used in systems with higher pressure water supply pumps, and are not recommended for closed loop applications.

Energy Savings with water circulation
Units with Integrated Variable-Speed Water Flow Control technology deliver higher operating cost savings by varying the water flow to match the unit's operation (ex: slows down when unit is in 1st stage). Slowing down the flow results in lower energy consumption by the water pump (=higher cost savings) in Integrated Variable-Speed Water Flow Control units (with pump either inside the unit or outside the unit).

Specifically, units with Integrated Variable-Speed Water Flow Control technology with INTERNAL ECM/Variable speed pump consume fewer watts than a PSC/fixed speed pump, even at full speed / load. When demand and load are lower (ex: 1st stage), the ECM pump slows down to consume less than 50% of the watts compared to its PSC counterpart. On average, the savings can be over 60 watts/ton by using the ECM pump vs. a fixed speed PSC pump.

Variable speed pump or motorized modulating valve delivers variable water-flow, controlled by DXM2 control, based on entering/leaving water ΔT.

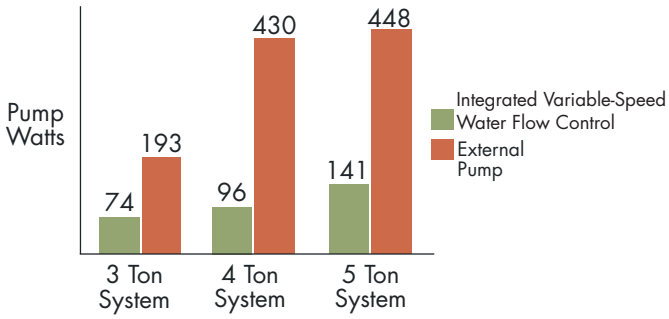

Two-Way Unit Communicating System

Two-Way Communication System and a Gateway Into the GT-PC/50YG Digital System
GT-PC/50YG Digital is equipped with a Two-Way Communication System that allow users to interact with their geothermal system in plain English AND delivers improved reliability and efficiency by precisely controlling smart variable speed components.

Precise operation:
The Microprocessor on the new DXM2 board enables intelligent, 2-way communication between the DXM2 board and smart components like the communicating thermostat, fan motor, and water pump. The control can also directly control the modulating valve and accepts various feedback/ input (see figure). The Intelligent DXM2 board uses information received from the smart components and sensors to precisely control operation of variable speed fan, variable speed water pump (or modulating valve) to deliver higher efficiency, reliability and increased comfort.

Plain English communication:
Two-Way Communication System allows users to interact with their GT-PC/50YG Digital system in PLAIN ENGLISH, through digital communicating thermostat (ATC) or configuration / diagnostic tool (ACDU). It enables configuration, monitoring and diagnostics of the system from the thermostat.

Configuration – Installers can configure GT-PC/50YG Digital units from the thermostat, including: Air flow, entering/leaving water ΔT, water-flow option configuration, unit configuration, accessory configuration, and demand reduction (optional, to limit unit operation during peak times).

Monitoring and Diagnostics – In the rare case there's an issue with the unit, the unit will communicate "Service needed" to the thermostat for consumers to see. From the thermostat, a consumer can also access dealer information (if programmed), fault description, possible causes and current system status (temperature readings, fan RPM and water flow status) to help the servicing contractor understand what's happening with the unit even before a service visit. Once the installer is on the job, in "service mode", the servicing contractor can diagnose the units much faster with possible causes shown on the thermostat and with system operating conditions at the time of the fault.

With the Two-Way Communication System, consumers and contractors have a gateway to system information.

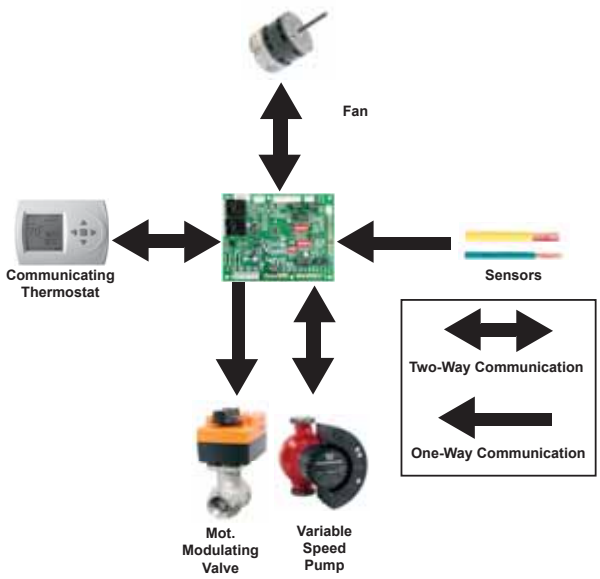

AIRFLOW SELECTION	CFM
HEAT STAGE 1	600
HEAT STAGE 2	750
AUXILIARY HEAT	850
EMERGENCY HEAT	850
COOL STAGE 1	525
COOL STAGE 2	700
COOL DEHUMID 1	425
COOL DEHUMID 2	550
CONTINUOUS FAN	350
HEAT OFF DELAY	60
COOL OFF DELAY	30

◀ PREVIOUS NEXT ▶

POSSIBLE FAULT CAUSES
LOW WATER COIL TEMP

LOW WATER TEMP - HTG

LOW WATER FLOW - HTG

LOW REFRIG CHARGE - HTG

INCORRECT LT1 SETTING

BAD LT1 THERMISTOR

◀ PREVIOUS

FAULT TEMPERATURE CONDITIONS
LT1 LOW WATER TEMP
HEAT 1 11:11 AM 11/14

LT1 TEMP	28.1
LT2 TEMP	97.3
HOT WATER EWT	121.5
COMP DISCHARGE	157.7
LEAVING AIR	92.7
LEAVING WATER	34.9
ENTERING WATER	42.1
CONTROL VOLTAGE	26.4

◀ PREVIOUS

How to Use this Catalog

As with any unit selection the first step is to perform a proper load calculation. Once the design cooling and heating loads are known the predominant load can be used to select the appropriate unit. In northern climates the heating load may be used to select the unit, whereas in southern climates the cooling load may be used. Likewise, the anticipated maximum EWT should be used for the cooling mode and the minimum anticipated EWT should be used when selecting for the heating mode. These EWTs may be the same temperature in the case of a ground water application.

Use the Full Load performance pages to select the unit size. Once the unit size is determined read the associated flow rate (gpm) for the needed capacity. Typically this is 1.5 – 2 gpm/nominal ton for ground water applications and 2.25 – 3 gpm/ton for ground loop applications.

For Closed Loop Applications

For closed loop systems where an internal circulating pump is desired, the 50YG units can be ordered with an internal, variable speed loop circulator. This would typically be for a ground loop or secondary pumping application. This internal loop circulator is the variable speed Grundfos Magna 25-140 for all 50YG units. The maximum possible pump curve for the 25-140 is shown in the table below. The 25-140 can also operate at any point below the curve as a "partial load" pumping condition. The designer/installer should use the information presented in this catalog to determine the available pump head for any external piping/accessories and ground loop (if applicable). This can be done in the following manner.

1. Determine the desired flow rate through the 50YG from the performance pages (as described above). Read the associated pressure drop in feet of head for the worst case condition (lowest anticipated entering water temperature) at the required flow rate.
2. Determine the maximum pump head from the pump curve associated with the required flow rate from step 1.
3. Subtract the unit pressure drop (from step 1) from the maximum available pump head (from step 2).
4. The remainder is the available pump head to overcome any external piping/accessories and the ground loop.

If the available pump head is equal to or greater than the calculated external piping and loop pressure drop, no other steps are required. If the available pump head is less than the calculated pressure drop of all external piping and the loop, then changes to the loop design should be considered.

Typically residential loops consist of ¾" circuit piping and 1 ¼" supply and return piping. If the available pump head is less than the calculated pressure drop of all external piping and the loop, it is recommended that larger pipe sizes be investigated such as 1" circuit piping and/or 1 ½" or 2" supply and return piping. This will significantly reduce system pressure drop with little change in Reynolds number. If this causes the Reynolds number to fall to an unacceptable level, try reducing the overall number of circuits. This will increase the flow rate through each circuit, increasing the Reynolds number.

Another solution might be to allow the system flow rate to be reduced. Typical geothermal flow rates are between 2.25 and 3 gpm/ton. As long as the system flow rate using the internal variable speed circulator is at or above 2.25 gpm/ton it is safe to operate the system. A quick review of the unit performance tables will show that this causes very little change in unit performance.

Magna Geo 25-140 Pump Performance

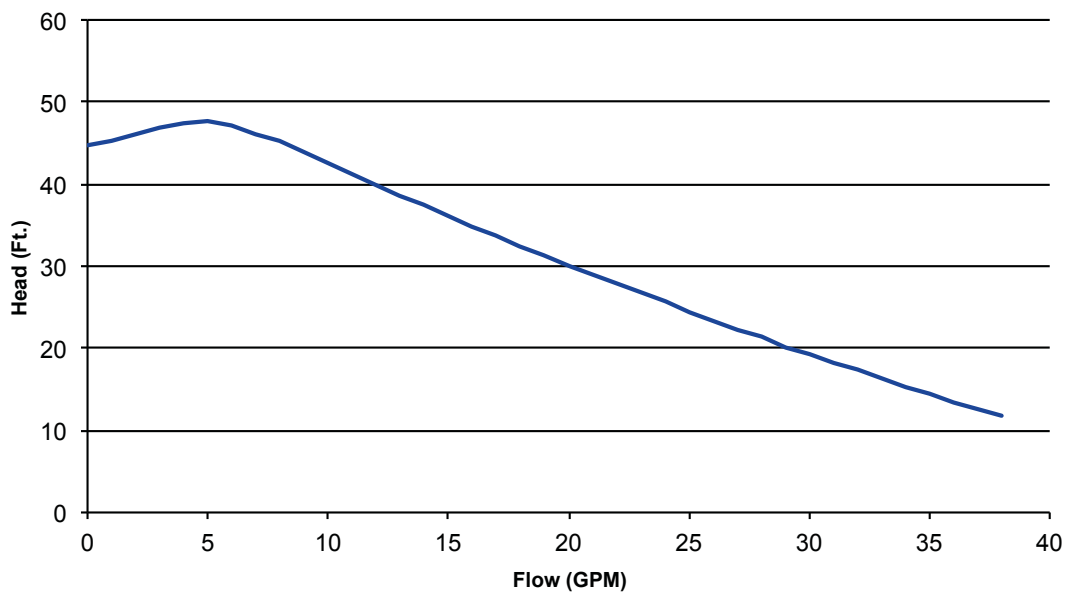

GPM	Head (ft)
0.0	44.7
1.0	45.4
2.0	46.1
3.0	46.8
4.0	47.5
5.0	47.7
6.0	47.1
7.0	46.1
8.0	45.3
9.0	43.9
10.0	42.6
11.0	41.2
12.0	39.9
13.0	38.7
14.0	37.4
15.0	36.1
16.0	34.9
17.0	33.7
18.0	32.5
19.0	31.3
20.0	30.1
21.0	28.9
22.0	27.8
23.0	26.7
24.0	25.6
25.0	24.5

How to Use this Catalog

Bryant's Pressure Drop Software can be used in conjunction with the pump performance information presented here to determine actual flow rate when the internal circulator is not able to provide the desired design flow rate.

For secondary pumping applications follow the above steps except do not consider the pressure drop of the loop. The internal 25-140 circulator will only need to overcome the pressure drop of the unit and any piping connecting the unit to the primary loop.

The 50YG can also be ordered with an internal modulating water control valve for closed loop systems with multiple units and a central pump. In this case the modulating water valve will stop water flow through the unit when the unit is not operating and control the flow rate through the unit during operation, saving pumping energy in both cases.

When using an internal modulating water valve the central pump must be able to overcome the pressure drop of the valve in addition to the pressure drop of the unit. Because of this, internal modulating valves for closed loop systems are designed with a low pressure drop in mind. The minimum pressure drop for the internal closed loop valve is shown in the 'Modulating Valves for Closed Loop Applications' table below. This pressure drop should be added to the unit pressure drop when determining system pressure drop for central pump selection.

For Open Loop Applications

The 50YG can also be ordered with the internal modulating water control valve for open loop systems with an external well pump. In this case the modulating water valve will stop water flow through the unit when the unit is not operating and act as a flow control device to control the flow rate through the unit during operation.

When using an internal modulating water valve the external pump must be able to overcome the minimum pressure drop of the valve in addition to the pressure drop of the unit. The minimum pressure drop for the open loop internal valve is shown in the 'Modulating Valves for Open Loop Applications' table below. This pressure drop should be added to the unit pressure drop when determining overall equipment pressure drop.

Modulating Valves for Closed Loop Applications

YG026		
Valve Cv = 4.7		
	60°F Water	
GPM	Valve ΔP @ GPM (psi)	Valve ΔP @ GPM (ft hd)
2.0	0.181	0.4
3.0	0.407	0.9
4.0	0.724	1.7
5.0	1.132	2.6
6.0	1.630	3.8

YG038		
Valve Cv = 7.4		
	60°F Water	
GPM	Valve ΔP @ GPM (psi)	Valve ΔP @ GPM (ft hd)
3.0	0.2	0.4
4.0	0.3	0.7
5.0	0.5	1.1
6.0	0.7	1.5
7.0	0.9	2.1
8.0	1.2	2.7
9.0	1.5	3.4

YG049		
Valve Cv = 10		
	60°F Water	
GPM	Valve ΔP @ GPM (psi)	Valve ΔP @ GPM (ft hd)
4.0	0.2	0.4
5.0	0.3	0.6
6.0	0.4	0.8
7.0	0.5	1.1
8.0	0.6	1.5
9.0	0.8	1.9
10.0	1.0	2.3
11.0	1.2	2.8
12.0	1.4	3.3

YG064 & 072		
Valve Cv = 19		
	60°F Water	
GPM	Valve ΔP @ GPM (psi)	Valve ΔP @ GPM (ft hd)
6.0	0.1	0.2
7.0	0.1	0.3
8.0	0.2	0.4
9.0	0.2	0.5
10.0	0.3	0.6
11.0	0.3	0.8
12.0	0.4	0.9
13.0	0.5	1.1
14.0	0.5	1.3
15.0	0.6	1.4
16.0	0.7	1.6
17.0	0.8	1.8

Modulating Valves for Open Loop Applications

YG026, 038 & 049		
Valve Cv = 4.7		
	60°F Water	
GPM	Valve ΔP @ GPM (psi)	Valve ΔP @ GPM (ft hd)
2.0	0.2	0.4
3.0	0.4	0.9
4.0	0.7	1.7
5.0	1.1	2.6
6.0	1.6	3.8
7.0	2.2	5.1
8.0	2.9	6.7
9.0	3.7	8.5
10.0	4.5	10.5
11.0	5.5	12.7
12.0	6.5	15.1

YG064 & 072		
Valve Cv = 7.4		
	60°F Water	
GPM	Valve ΔP @ GPM (psi)	Valve ΔP @ GPM (ft hd)
6.0	0.7	1.5
7.0	0.9	2.1
8.0	1.2	2.7
9.0	1.5	3.4
10.0	1.8	4.2
11.0	2.2	5.1
12.0	2.6	6.1
13.0	3.1	7.1
14.0	3.6	8.3
15.0	4.1	9.5
16.0	4.7	10.8
17.0	5.3	12.2

GT-PC/50YG Digital Design Features

Application Flexibility

- Six Capacities 026, 038, 049, 064, and 072
- Entering water temperature operation range (20-120°F EWT)
- Available in vertical and horizontal configurations
- Optional matching electric auxiliary heaters
- Exceeds the federal requirements for 30% tax credit on installation costs
- Bryant GT-PC Digital Series Products shall be warranted by the manufacturer against defects in materials and workmanship for a period ten years on the compressor and refrigerant circuit parts and five years on all remaining parts, with a service labor allowance for the first five years on the compressor and refrigerant circuit parts and two years on all remaining parts. An optional extended labor warranty is available which extends the service labor allowance to ten years for the compressor and refrigeration circuit parts and ten years on all remaining parts.
- Integrated Variable-Speed Water Flow Control functionality for most geothermal applications

Operating Efficiencies

- Exceeds ASHRAE 90.1 and meets Energy Star Tier 3 efficicency levels
- Energy Star® Most Efficient
- Puron® HFC-410A zero ozone depletion refrigerant.
- Two-Stage operation for ultra high efficiencies and unsurpassed comfort.
- Optional hot water generator with internally mounted pump.
- Rugged and highly efficient next generation Copeland UltraTech™ scroll compressors provide ultra high efficiencies and full capacity with reduced cycling losses.
- Oversized coaxial tube water-to-refrigerant heat exchangers operate at low liquid pressure drop. Convoluted copper (and optional cupro-nickel) water tube functions efficiently at low-flow rates and provides low-temperature-damage resistance.
- Oversized tin plated, rifled tube/lanced aluminum fin, air to refrigerant heat exchangers provide high efficiency at low face velocity.
- Large low RPM blowers with variable speed fan motors provide quiet, efficient air movement with high static capability.

Service & Installation Advantages

Bryant's GT-PC Digital series incorporates features that make it extremely easy to install:

- Ease of installation: [1] Integrated Variable Speed Water Flow Control- these units are ready to install out of the box with no external pumps expansion tanks or valves for the ground loop removing a lot of the complexity of installation. [2] Full digital controls that communicate with the thermostat which allows all unit configuration from the thermostat… the most ease of installation setup for any level of installer. This is much simpler than the use of dip-switches on the control board inside the unit.
- Only 4 wires between stat and unit: Others require up to 14 wires for full functionality. This is achieved leveraging the full power of the microprocessor on the control.
- Small footprint: The small size of the GT-PC units allows the dealer to install this unit in places they either (1) couldn't install before or (2) were very tight fit before, like 2.0/3.0 door jams, small mechanical closets, attic doors and crawl spaces.
- Ground source heat pumps are among the HVAC industry's easiest equipment to service. There are no outdoor air coils to clean, there are no combustible heat exchangers to service and have less moving parts than most conventional systems. The communicating DXM2 control board diagnostic and communicating thermostat feature allow the home owner to tell the installing contractor what is wrong with the unit without an inconvenient and expensive call back. The two-section swing-out control box design provides wide-open service access. Five unit access panels allow technicians to access any side of the cabinet. Service friendly highly accessible high/low pressure ports are located on a service bracket at the front of the unit. No other product / manufacturer in the geothermal segment offer this convenience.
- An extremely compact cabinet to allow for installation in tight or hard to reach locations. For example, units up through size 42 will easily fit through a 2'0" doorway or attic scuttle. Since geothermal source functions are integrated within the cabinet, there is no additional space required for bulky external pumping modules. A unique control box and thoughtful internal layout allow the ability for all servicing from the front access panel. Of course, the majority of the unit troubleshooting can be done right at the thermostat keeping the technician out of tight spaces.

  Features:
  - Small cabinet footprint
  - Integrated geo source functions eliminate bulky external pumping modules
- An innovative two-section electrical control box design that tucks the stationary line voltage components safely behind a swing-out low voltage control panel to provide clear service access through the front of the unit. The low voltage panel can even be quickly pulled off the hinges and removed. Harness connections make controller replacement a snap. Plus, the two-section swing-out control box design provides wide-open service access.
- An integrated electronic controller provides advanced unit functionality and comprehensive diagnostic and setup capabilities through digital communication links with the variable-speed fan motor, variable-speed geothermal source pump and matching electronic LCD thermostat.
- Diagnostic display of system inputs, outputs, and configuration settings <u>at thermostat</u>.
- Diagnostic display of system temperatures at thermostat:
  - Geo source in and out
  - Refrigerant discharge, liquid, and evaporator
  - Leaving air
  - Entering hot water
- Immediate manual control of all DXM2 outputs at thermostat for rapid troubleshooting
- No outdoor units to clean with ants fouling up contactors, no combustion heat exchangers to condemn… indoor packaged unit- no remote components, with the Integrated Variable Speed Water Flow Control features, the loop pump, flushing, purging valves, ports and expansion tank are located inside the unit… just change the air filter… period. "Flat" ground loops are a thing of the past… costly call backs go away with the internally mounted expansion tank.
- Any application:
  - Ground Loop, ground Water and tower boiler applications
  - Ultra Compact Cabinet and foot print- installation capable in very small confines

GT-PC/50YG Digital Design Features

- Residential and commercial new construction, retrofit replacement- multi-family
- Single-phase 208-230V
- Entering water temperature operation range 20-120°F

- HP/LP ports located behind front access panel
- Five access panels allowing access from any side of the cabinet
- Accessible components, including high and low pressure ports for easy repair / diagnostics
- Expansion tank eliminates "flat loop" callbacks
- Brass swivel-type geo and hot water connections.
- Insulated divider and separate air handling/compressor compartments permit service testing without air bypass.
- Intelligent fault retry with history retention.
- Auxiliary relay outputs for accessory connections.
- UPS (Unit Performance Sentinel) provides early warning of inefficient operation.

Factory Quality & Industry Certifications

All units are built and factory run tested on our Integrated Process Control Assembly System (IPCS). The IPCS is a unique state of the art manufacturing system that is designed to assure quality of the highest standards of any manufacturer in the water-source industry. Our IPCS system:

- Verifies that the correct components are being assembled.
- Automatically performs special leak tests on all joints
- Conducts pressure tests
- Performs highly detailed run test unparalleled in the HVAC industry
- Automatically disables packaging for a "failed" unit
- Creates computer database for future service analysis and diagnostics from run test results
- All refrigerant brazing is done in a nitrogen atmosphere
- All units are deep evacuated to less than 100 microns prior to refrigerant charging
- All joints are both helium and halogen leak tested to insure annual leak rate of less than ¼ ounce

- All units are water run-tested in all modes to insure efficiency and reliability.
- Heavy gauge galvanized steel cabinets are epoxy powder coated for durable and long-lasting finish.
- Coaxial heat exchanger, refrigerant suction lines and all water lines are fully insulated to eliminate condensation problems in low temperature applications.
- Noise reduction features include: dual level compressor isolation; insulated compressor compartment; interior cabinet insulation using 1/2" coated glass fiber and variable speed fan.
- Safety features include: high pressure and loss of charge to protect the compressor, condensate overflow protection, low-temperature protection sensors to safeguard the coaxial heat exchanger and air coil, hot water high-limit, and low compressor discharge temperature sensor provided to shut down the hot water generator when conditions dictate. Fault lockout enables emergency heat and prevents compressor operation until thermostat or circuit breaker has been reset.
- AHRI/ASHRAE/ANSI/ISO 13256-1 certified.
- ETL listed.
- US EPA "Energy Star" Tier 3 compliant.
- ISO 9001:2008 Certified.

Simplified Controls

DXM2 Integrated Unit Controller:

- Communicating interface to thermostat, fan motor and geo source pump
- Comprehensive setup and diagnostics via system thermostat or service tool
- 7 temperature sensor inputs for system protection and control
- Anti-short cycle and over/under voltage protection
- High pressure, loss of charge, and condensate overflow protection
- LED fault and status indication at controller
- Service tool port for optional setup and diagnostics at unit

ATC32 Communicating Electronic LCD Thermostat:

- 4 wire connection
- 3 heat / 2 cool staged operation
- Integrated humidity control
- Manual or automatic changeover
- Standard or programmable operation
- Utility demand reduction via independent time programs or external input
- Display of system faults with cause and troubleshooting guidance
- Comprehensive installation setup menus
- Comprehensive service diagnostics menus

GT-PC/50YG Digital Design Features

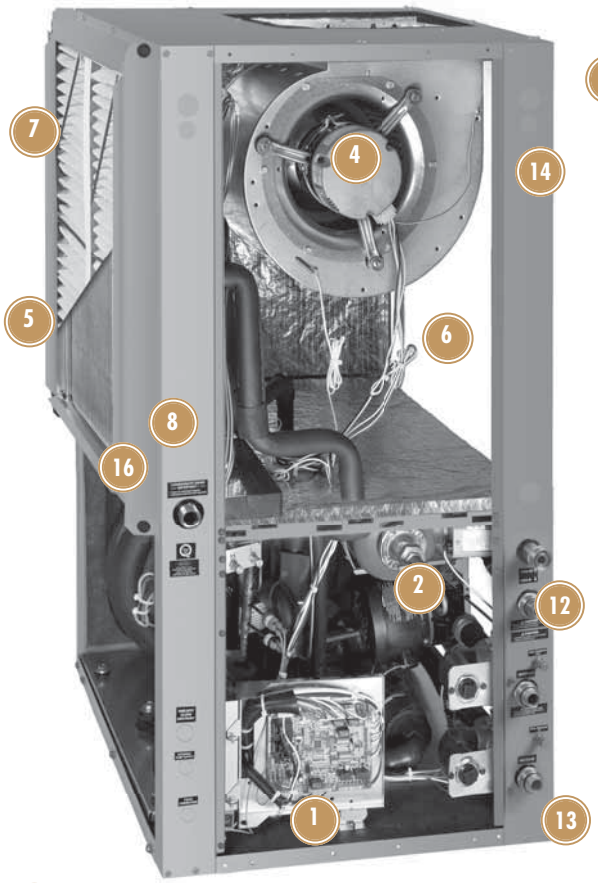

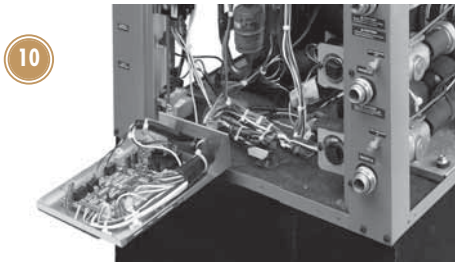

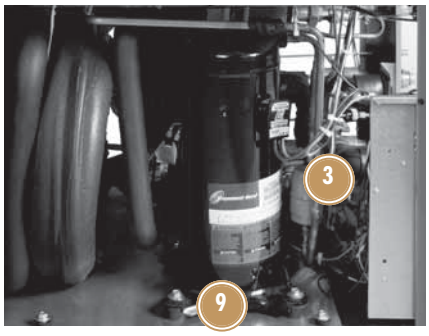

1. Integrated Electronic Communicating Interface to Thermostat, Fan Motor and Geo Source Pump - For Configuration Monitoring Fault Display and Diagnostics AT THERMOSTAT**
2. "Integrated Variable Speed Water Flow Control" Internal Variable Water Flow System with Internal Flow Center or Internal Motorized Modulating Valve
3. Next Generation Copeland™ Ultra-Tech™ Two-Stage Scroll Compressor
4. Emerson UltraTech® variable-speed Communicating Fan Motor with Soft Start and Constant CFM Control
5. Tin-Plated Copper Air Coils to resist Formicary Corrosion
6. Foil-faced Insulation in the Blower Section and Fully Insulated Compressor Section Conform to ASHRAE 62 Specifications
7. Two-Inch MERV 11* Filter with Access Frame Designed for Low-Leakage Duct Connection
8. Double-sloped Stainless Steel Drain Pan is Easy to Clean
9. Dual Level Compressor Isolation for Ultra Quiet Operation
10. Two-section Swing-out Control Box Design Provides Wide-open Service Access
11. Refrigerant Schrader Ports Located on Bracket at the Front Access Panel
12. Water Schrader Ports on Corner Post to Read Pressure Drop Across Water Heat Exchanger
13. Small Cabinet Footprint
14. Heavy Gauge Galvanized steel cabinet is Epoxy Powder-Coated in a Durable and Attractive Bond Silver Finish
15. Designed for External P-trap to Eliminate Internal Drain-Line Cleanouts

* MERV= Minimum Efficiency Reporting Value as specified by ASHRAE (American Society of Heating, Refrigerating and Air Conditioning Engineers) standard 52.2.

** When installed with a recommended Residential Thermostat.

Unit Model Key

1 2 3	4 5 6	7	8	9	10	11	12	13
50	YGV	026	J	D	2	C	3	1	1

PREFIX

SERIES (Extended Range)
YGV = Vertical Upflow Residential
YGH = Horizontal Residential
YGD = Downflow Residential

UNIT SIZE
026
038
049
064
072

AIR FLOW CONFIGURATION

Vertical Upflow YGV				
Option	Return	Discharge	Filter	Motor
J	Left	Top	2”	ECM
K	Right	Top	2”	ECM

Horizontal YGH				
Option	Return	Discharge	Filter	Motor
N	Right	Left	2”	ECM
P	Right	Back	2”	ECM
W	Left	Right	2”	ECM
Y	Left	Back	2”	ECM

Vertical Downflow YGD				
Option	Return	Discharge	Filter	Motor
J	Left	Down	2”	ECM
K	Right	Down	2”	ECM

CONTROLS
D = DXM2

WATER CIRCUIT OPTIONS
0 = None
2 = Internal Flow Controller High Head
5 = Motorized Valve (Modulating)
Closed Loop Applications, Low System Pressure Drop
6 = Motorized Valve (Modulating)
Open Loop Applications, High System Pressure Drop

HEAT EXCHANGER OPTIONS

	Copper	Cupro-Nickel
HWG W/Pump (Standard)	C	N
No HWG	A	J

VOLTAGE
3 = 208-230/60/1

REVISION LEVEL
1 = Current Revision

PACKAGING
1 = Single Pack, Domestic

In Position 9 and 10, only the following combinations are available:

With HWG	Without HWG	Description
2C	2A	Internal Flow Controller with Copper Water Coil
5C	5A	Motorized Modulating Valve with Copper Water Coil
6N	6J	Motorized Modulating Valve with Cupro-Nickel Water Coil

AHRI/ISO/ASHRAE 13256-1

ASHRAE/AHRI/ISO 13256-1

Model	Capacity Modulation	Water Loop Heat Pump				Ground Water Heat Pump				Ground Loop Heat Pump			
		Cooling 86°F		Heating 68°F		Cooling 59°F		Heating 50°F		Cooling Full Load 77°F Part Load 68°F		Heating Full Load 32°F Part Load 41°F	
		Capacity Btuh	EER Btuh/W	Capacity Btuh	COP	Capacity Btuh	EER Btuh/W	Capacity Btuh	COP	Capacity Btuh	EER Btuh/W	Capacity Btuh	COP
YG026	Part	18,900	19.4	21,900	6.4	21,800	35.1	17,500	5.2	20,700	27.8	15,100	4.5
	Full	25,100	17.5	30,200	5.6	28,500	27.1	24,600	4.9	26,100	19.7	18,700	3.9
YG038	Part	26,800	19.3	31,600	6.3	31,100	34.2	25,900	5.3	30,200	29.4	23,000	4.7
	Full	37,800	17.6	44,900	5.7	43,100	26.9	37,000	5.1	39,700	20.1	29,000	4.3
YG049	Part	36,300	19.2	43,400	6.2	41,800	34.1	34,800	5.0	40,100	27.7	29,900	4.3
	Full	48,500	17.1	59,500	5.4	55,600	25.9	48,200	4.7	50,600	19.1	37,000	3.9
YG064	Part	46,100	18.5	54,500	5.9	52,900	32.2	43,800	4.9	51,000	26.5	37,900	4.3
	Full	61,300	16.0	77,200	5.3	71,300	24.2	63,000	4.7	66,000	18.6	48,500	3.8
YG072	Part	52,800	16.6	64,400	5.1	60,600	28.4	53,000	4.4	57,900	23.0	45,800	3.8
	Full	68,100	14.9	85,100	4.7	77,500	22.3	71,200	4.3	71,500	16.7	55,600	3.6

Ground Loop Heat Pump ratings based on 15% methanol antifreeze solution
All ratings based upon operation at lower voltage of dual voltage rated models

About AHRI/ISO/ASHRAE 13256-1

AHRI/ASHRAE/ISO 13256-1 (Air-Conditioning and Refrigeration Institute/American Society of Heating, Refrigerating and Air Conditioning Engineers/International Standards Organization) is a certification standard for water-source heat pumps used in the following applications:

- WLHP (Water Loop Heat Pump – Boiler/Tower)
- GWHP (Ground Water Heat Pump – Open Loop)
- GLHP (Ground Loop Heat Pump – Geothermal)

The directory at http://www.ahrinet.org/ is constantly being updated and immediately available on the Internet.

Water and air temperatures used in AHRI certification standards are shown below.

Test Condition Comparison Table

	WLHP	GWHP	GLHP
Cooling			
Entering Air Temperature - DB/WB °F [°C]	80.6/66.2 [27/19]	80.6/66.2 [27/19]	80.6/66.2 [27/19]
Entering Water Temperature - °F [°C]	86 [30]	59 [15]	77 [25]
Fluid Flow Rate	*	*	*
Heating			
Entering Air Temperature - DB/WB °F [°C]	68 [20]	68 [20]	68 [20]
Entering Water Temperature - °F [°C]	68 [20]	50 [10]	32 [0]
Fluid Flow Rate	*	*	*

*Flow rate is specified by the manufacturer

Data certified by AHRI include heating/cooling capacities, EER (Energy Efficiency Ratio – Btuh per Watt) and COP (Btuh per Btuh) at the various conditions shown above. Pump power correction is calculated to adjust efficiencies for pumping Watts. Fan power is corrected to zero external static pressure using the equation below. The nominal airflow is rated at a specific external static pressure.

- Fan Power Correction = (cfm x 0.472) x (esp x 249)/300

Capacities and efficiencies are calculated using the following equations:

- ISO Cooling Capacity = Cooling Capacity (Btuh) + [Fan Power Correction (Watts) x 3.412]
- ISO EER Efficiency (Btuh/W) =
  ISO Cooling Capacity (Btuh)/[Power Input (Watts) – Fan Power Correction (Watts) + Pump Power Correction (Watts)]
- ISO Heating Capacity = Heating Capacity (Btuh) – [Fan Power Correction (Watts) x 3.412]
- ISO COP Efficiency (Btuh/Btuh) =
  ISO Heating Capacity (Btuh) x 3.412/[Power Input (Watts) - Fan Power Correction (Watts) + Pump Power Correction (Watts)]

Reference Calculations & Legend

Heating

$$LWT = EWT - \frac{HE}{GPM \times 500}$$

$$LAT = EAT + \frac{HC}{CFM \times 1.08}$$

Cooling

$$LWT = EWT + \frac{HR}{GPM \times 500}$$

$$LC = TC - SC$$

$$LAT\ (DB) = EAT\ (DB) - \frac{SC}{CFM \times 1.08}$$

$$S/T = \frac{SC}{TC}$$

Hot Water Generator capacities (HWC) are based on potable water flow rate of 0.4 gpm per nominal equipment ton and 90°F entering potable water temperature.

CFM	=	airflow, cubic feet/minute	HE	=	total heat of extraction, Mbtuh
EWT	=	entering water temperature, °F	HWC	=	Hot Water Generator (desuperheater) capacity, Mbtuh
GPM	=	water flow in US gallons/minute	WPD	=	Water coil pressure drop (psi & ft hd)
EAT	=	entering air temperature, Fahrenheit (dry bulb/wet bulb)	EER	=	Energy Efficiency Ratio = BTU output/Watt input
HC	=	air heating capacity, Mbtuh	COP	=	Coefficient of Performance = BTU output/BTU input
TC	=	total cooling capacity, Mbtuh	LWT	=	leaving water temperature, °F
SC	=	sensible cooling capacity, Mbtuh	LAT	=	leaving air temperature, °F
KW	=	total power unit input, KiloWatts	LC	=	latent cooling capacity, Mbtuh
HR	=	total heat of rejection, Mbtuh	S/T	=	sensible to total cooling ratio

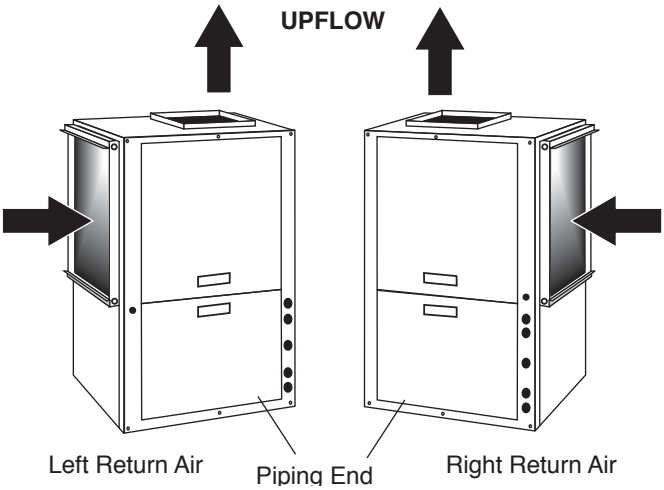

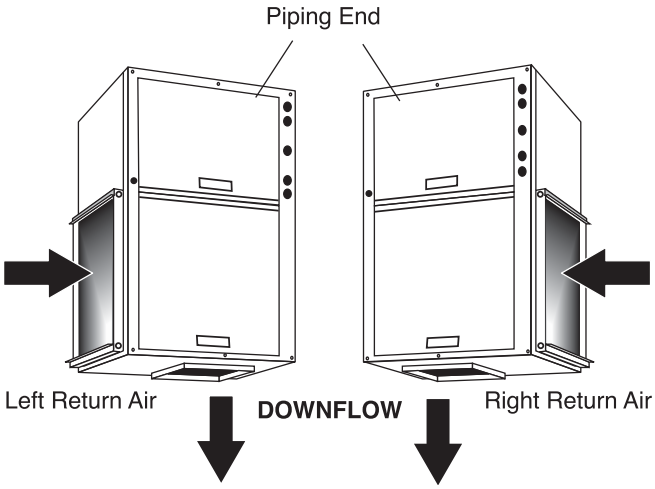

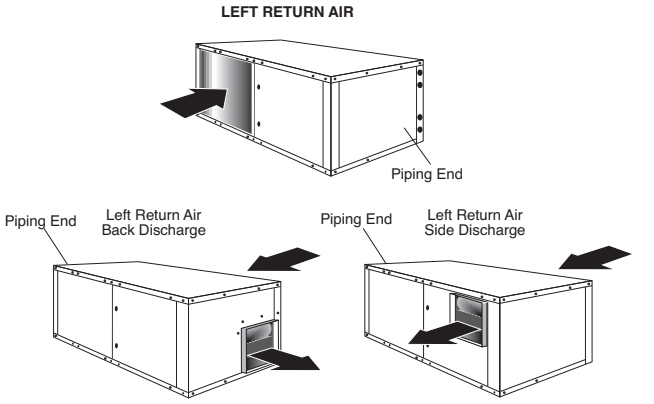

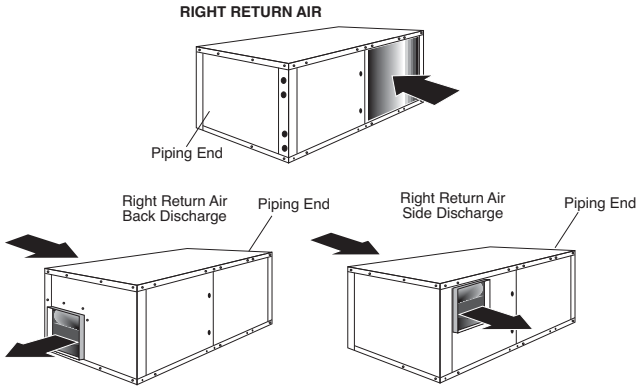

Full Load Correction Factors

Air Flow Correction Table

Airflow	Cooling				Heating		
% of Rated	Total Capacity	Sensible Capacity	Power	Heat of Rejection	Heating Capacity	Power	Heat of Extraction
60%	0.925	0.788	0.913	0.922	0.946	1.153	0.896
69%	0.946	0.829	0.926	0.942	0.959	1.107	0.924
75%	0.960	0.861	0.937	0.955	0.969	1.078	0.942
81%	0.972	0.895	0.950	0.968	0.977	1.053	0.959
88%	0.983	0.930	0.965	0.979	0.985	1.032	0.974
94%	0.992	0.965	0.982	0.990	0.993	1.014	0.988
100%	1.000	1.000	1.000	1.000	1.000	1.000	1.000
106%	1.007	1.033	1.020	1.009	1.006	0.989	1.011
113%	1.012	1.064	1.042	1.018	1.012	0.982	1.019
119%	1.016	1.092	1.066	1.025	1.018	0.979	1.027
125%	1.018	1.116	1.091	1.032	1.022	0.977	1.033
130%	1.019	1.132	1.112	1.037	1.026	0.975	1.038

Entering Air Correction Table

Heating			
Entering Air DB°F	Heating Capacity	Power	Heat of Extraction
40	1.052	0.779	1.120
45	1.043	0.808	1.102
50	1.035	0.841	1.084
55	1.027	0.877	1.065
60	1.019	0.915	1.045
65	1.010	0.957	1.023
68	1.004	0.982	1.010
70	1.000	1.000	1.000
75	0.989	1.045	0.974
80	0.976	1.093	0.946

* = Sensible capacity equals total capacity
AHRI/ISO/ASHRAE 13256-1 uses entering air conditions of Cooling - 80.6°F DB/66.2°F WB, and Heating - 68°F DB/59°F WB entering air temperature

Cooling													
Entering Air WB°F	Total Capacity	Sensible Cooling Capacity Multiplier - Entering DB °F										Power	Heat of Rejection
		60	65	70	75	80	80.6	85	90	95	100		
45	0.832	1.346	1.461	1.603	*	*	*	*	*	*	*	0.946	0.853
50	0.850	1.004	1.174	1.357	*	*	*	*	*	*	*	0.953	0.870
55	0.880	0.694	0.902	1.115	1.331	*	*	*	*	*	*	0.964	0.896
60	0.922		0.646	0.875	1.103	1.329	1.356	*	*	*	*	0.977	0.932
65	0.975			0.639	0.869	1.096	1.123	1.320	*	*	*	0.993	0.979
66.2	0.990			0.582	0.812	1.039	1.066	1.262	1.482	*	*	0.997	0.991
67	1.000			0.545	0.774	1.000	1.027	1.223	1.444	*	*	1.000	1.000
70	1.040				0.630	0.853	0.880	1.075	1.297	1.517	*	1.011	1.035
75	1.117					0.601	0.627	0.821	1.046	1.275	1.510	1.033	1.101

Part Load Correction Factors

Air Flow Correction Table

Airflow	Cooling				Heating		
% of Rated	Total Capacity	Sensible Capacity	Power	Heat of Rejection	Heating Capacity	Power	Heat of Extraction
60%	0.920	0.781	0.959	0.927	0.946	1.241	0.881
69%	0.942	0.832	0.964	0.946	0.960	1.163	0.915
75%	0.956	0.867	0.696	0.959	0.969	1.115	0.937
81%	0.969	0.901	0.975	0.970	0.978	1.076	0.956
88%	0.981	0.934	0.982	0.981	0.986	1.043	0.973
94%	0.991	0.967	0.990	0.991	0.993	1.018	0.988
100%	1.000	1.000	1.000	1.000	1.000	1.000	1.000
106%	1.007	1.033	1.011	1.008	1.006	0.990	1.010
113%	1.013	1.065	1.023	1.015	1.012	0.986	1.017
119%	1.018	1.098	1.036	1.021	1.017	0.983	1.024
125%	1.021	1.131	1.051	1.026	1.021	0.981	1.030
130%	1.023	1.159	1.063	1.030	1.024	0.979	1.034

Entering Air Correction Table

Heating			
Entering Air DB°F	Heating Capacity	Power	Heat of Extraction
40	1.084	0.732	1.161
45	1.073	0.764	1.140
50	1.060	0.802	1.117
55	1.046	0.846	1.090
60	1.031	0.893	1.061
65	1.016	0.945	1.031
68	1.006	0.978	1.013
70	1.000	1.000	1.000
75	0.984	1.058	0.968
80	0.968	1.117	0.936

* = Sensible capacity equals total capacity
AHRI/ISO/ASHRAE 13256-1 uses entering air conditions of Cooling - 80.6°F DB/66.2°F WB, and Heating - 68°F DB/59°F WB entering air temperature

Cooling													
Entering Air WB°F	Total Capacity	Sensible Cooling Capacity Multiplier - Entering DB °F										Power	Heat of Rejection
		60	65	70	75	80	80.6	85	90	95	100		
45	0.876	1.286	1.302	1.389	*	*	*	*	*	*	*	0.981	0.895
50	0.883	1.002	1.099	1.241	*	*	*	*	*	*	*	0.985	0.901
55	0.903	0.706	0.871	1.060	1.271	*	*	*	*	*	*	0.989	0.918
60	0.935		0.617	0.844	1.079	1.319	1.349	*	*	*	*	0.993	0.945
65	0.979			0.595	0.849	1.096	1.128	1.342	*	*	*	0.998	0.982
66.2	0.991			0.531	0.789	1.040	1.070	1.284	1.522	*	*	0.999	0.993
67	1.000			0.486	0.747	1.000	1.030	1.245	1.481	*	*	1.000	1.000
70	1.035				0.583	0.842	0.873	1.090	1.327	1.552	*	1.003	1.030
75	1.105					0.552	0.584	0.811	1.057	1.290	1.510	1.008	1.088

Performance Data Selection Notes

Operation in Shaded Area: Closed Loop Application

For operation in the shaded area, appropriate levels of a proper anti-freeze should be used in systems with leaving water temperatures of 40°F or below and the JW3 jumper should be clipped. This is due to the potential of the refrigerant temperature being as low as 32°F [0°C] with 40°F [4.4°C] LWT, which may lead to a nuisance cutout due to the activation of the Low Temperature Protection. JW3 should never be clipped for systems without antifreeze.

Open Loop Application:

For operation in shaded area (below 40°F LWT) in open loop applications, ΔT (on DXM2) should be set such that the LWT (=EWT - ΔT) doesn't drop below 40°F. JW3 should NEVER be clipped for systems without antifreeze.

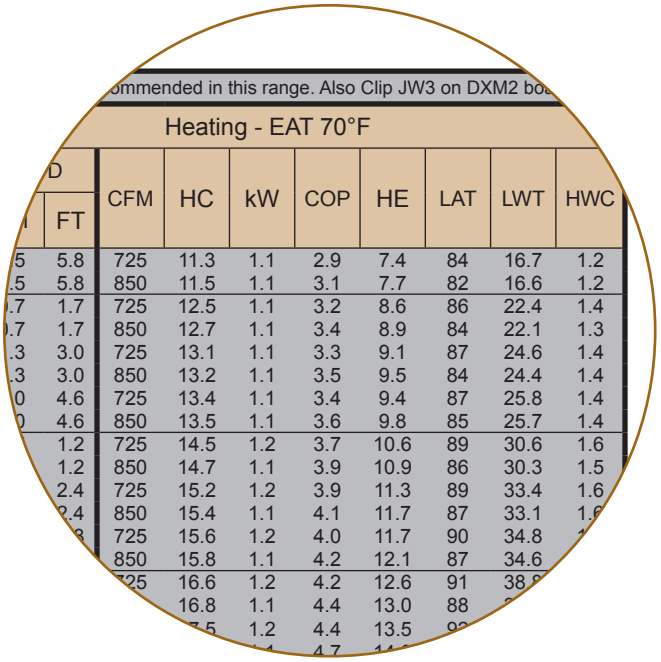

ommended in this range. Also Clip JW3 on DXM2 bo

Heating - EAT 70°F

D	FT	CFM	HC	kW	COP	HE	LAT	LWT	HWC
5	5.8	725	11.3	1.1	2.9	7.4	84	16.7	1.2
.5	5.8	850	11.5	1.1	3.1	7.7	82	16.6	1.2
.7	1.7	725	12.5	1.1	3.2	8.6	86	22.4	1.4
.7	1.7	850	12.7	1.1	3.4	8.9	84	22.1	1.3
.3	3.0	725	13.1	1.1	3.3	9.1	87	24.6	1.4
.3	3.0	850	13.2	1.1	3.5	9.5	84	24.4	1.4
0	4.6	725	13.4	1.1	3.4	9.4	87	25.8	1.4
0	4.6	850	13.5	1.1	3.6	9.8	85	25.7	1.4
	1.2	725	14.5	1.2	3.7	10.6	89	30.6	1.6
	1.2	850	14.7	1.1	3.9	10.9	86	30.3	1.5
	2.4	725	15.2	1.2	3.9	11.3	89	33.4	1.6
	2.4	850	15.4	1.1	4.1	11.7	87	33.1	1.6
	3	725	15.6	1.2	4.0	11.7	90	34.8	1
		850	15.8	1.1	4.2	12.1	87	34.6	
		725	16.6	1.2	4.2	12.6	91	38.8	
			16.8	1.1	4.4	13.0	88		
			7.5	1.2	4.4	13.5	9		
					4.7				

Performance Data — GT-PC Model 026 - Part Load

Performance capacities shown in thousands of Btuh

Antifreeze use recommended in this range. Also Clip JW3 on DXM2 board.

EWT °F	Cooling - EAT 80/67°F											Heating - EAT 70°F										
	GPM	WPD		CFM	TC	SC	kW	EER	HR	LWT	HWC	GPM	WPD		CFM	HC	kW	COP	HE	LAT	LWT	HWC
		PSI	FT										PSI	FT								
20	1.0	0.3	0.7	640	21.9	16.3	0.73	30.1	24.4	70.0	0.9	4.5	2.5	5.8	725	11.3	1.14	2.9	7.4	84.4	16.7	1.2
	1.0	0.3	0.7	750	22.4	17.5	0.74	30.2	24.9	70.0	0.9	4.5	2.5	5.8	850	11.5	1.10	3.1	7.7	82.5	16.6	1.2
30	1.2	0.3	0.7	640	21.9	16.3	0.73	30.1	24.4	70.0	0.9	2.3	0.7	1.7	725	12.5	1.15	3.2	8.6	86.0	22.4	1.4
	1.2	0.3	0.7	750	22.4	17.5	0.74	30.2	24.9	70.0	0.9	2.3	0.7	1.7	850	12.7	1.10	3.4	8.9	83.8	22.1	1.3
	1.2	0.3	0.7	640	21.9	16.3	0.73	30.1	24.4	70.0	0.9	3.4	1.3	3.0	725	13.1	1.15	3.3	9.1	86.7	24.6	1.4
	1.2	0.3	0.7	750	22.4	17.5	0.74	30.2	24.9	70.0	0.9	3.4	1.3	3.0	850	13.2	1.10	3.5	9.5	84.4	24.4	1.4
	1.2	0.3	0.7	640	21.9	16.3	0.73	30.1	24.4	70.0	0.9	4.5	2.0	4.6	725	13.4	1.15	3.4	9.4	87.1	25.8	1.4
	1.2	0.3	0.7	750	22.4	17.5	0.74	30.2	24.9	70.0	0.9	4.5	2.0	4.6	850	13.5	1.10	3.6	9.8	84.8	25.7	1.4
40	1.7	0.3	0.7	640	21.9	16.3	0.73	30.1	24.4	70.0	0.9	2.3	0.5	1.2	725	14.5	1.15	3.7	10.6	88.5	30.6	1.6
	1.7	0.3	0.7	750	22.4	17.5	0.74	30.2	24.9	70.0	0.9	2.3	0.5	1.2	850	14.7	1.11	3.9	10.9	86.0	30.3	1.5
	1.7	0.3	0.7	640	21.9	16.3	0.73	30.1	24.4	70.0	0.9	3.4	1.0	2.4	725	15.2	1.15	3.9	11.3	89.4	33.4	1.6
	1.7	0.3	0.7	750	22.4	17.5	0.74	30.2	24.9	70.0	0.9	3.4	1.0	2.4	850	15.4	1.11	4.1	11.7	86.8	33.1	1.6
	1.7	0.3	0.7	640	21.9	16.3	0.73	30.1	24.4	70.0	0.9	4.5	1.6	3.8	725	15.6	1.16	4.0	11.7	89.9	34.8	1.7
	1.7	0.3	0.7	750	22.4	17.5	0.74	30.2	24.9	70.0	0.9	4.5	1.6	3.8	850	15.8	1.11	4.2	12.1	87.2	34.6	1.6
50	2.3	0.4	1.0	640	21.7	16.3	0.75	29.0	24.3	71.6	1.1	2.3	0.4	1.0	725	16.6	1.16	4.2	12.6	91.2	38.8	1.8
	2.3	0.4	1.0	750	22.2	17.4	0.76	29.0	24.8	72.0	1.1	2.3	0.4	1.0	850	16.8	1.11	4.4	13.0	88.3	38.4	1.7
	2.5	0.5	1.2	640	21.9	16.3	0.73	30.1	24.4	70.0	0.9	3.4	0.9	2.0	725	17.5	1.16	4.4	13.5	92.4	42.0	1.8
	2.5	0.5	1.2	750	22.4	17.5	0.74	30.2	24.9	70.0	0.9	3.4	0.9	2.0	850	17.8	1.11	4.7	14.0	89.3	41.8	1.8
	2.5	0.5	1.2	640	21.9	16.3	0.73	30.1	24.4	70.0	0.9	4.5	1.4	3.2	725	18.0	1.16	4.5	14.0	93.0	43.8	1.9
	2.5	0.5	1.2	750	22.4	17.5	0.74	30.2	24.9	70.0	0.9	4.5	1.4	3.2	850	18.2	1.11	4.8	14.4	89.9	43.6	1.8
60	2.3	0.4	1.0	640	20.7	15.9	0.86	24.0	23.7	81.0	1.4	2.3	0.4	1.0	725	18.8	1.16	4.7	14.8	94.0	46.9	1.9
	2.3	0.4	1.0	750	21.1	17.0	0.88	24.1	24.1	81.5	1.5	2.3	0.4	1.0	850	19.0	1.12	5.0	15.2	90.7	46.5	1.9
	3.4	0.8	1.8	640	21.5	16.2	0.78	27.7	24.1	74.2	1.1	3.4	0.8	1.8	725	19.8	1.17	5.0	15.8	95.3	50.7	2.0
	3.4	0.8	1.8	750	21.9	17.3	0.79	27.7	24.6	74.5	1.2	3.4	0.8	1.8	850	20.1	1.12	5.3	16.3	91.9	50.4	2.0
	4.5	1.3	2.9	640	21.8	16.3	0.74	29.6	24.4	70.8	1.0	4.5	1.3	2.9	725	20.4	1.17	5.1	16.4	96.0	52.7	2.1
	4.5	1.3	2.9	750	22.3	17.4	0.75	29.6	24.8	71.0	1.0	4.5	1.3	2.9	850	20.7	1.12	5.4	16.8	92.5	52.5	2.0
70	2.3	0.4	1.0	640	19.5	15.5	0.99	19.7	22.9	90.3	2.0	2.3	0.4	1.0	725	20.9	1.17	5.2	16.9	96.7	55.0	2.1
	2.3	0.4	1.0	750	19.9	16.6	1.01	19.7	23.3	90.8	2.0	2.3	0.4	1.0	850	21.2	1.12	5.5	17.4	93.1	54.6	2.0
	3.4	0.8	1.8	640	20.4	15.8	0.90	22.7	23.4	83.8	1.6	3.4	0.8	1.8	725	22.1	1.17	5.5	18.1	98.2	59.4	2.2
	3.4	0.8	1.8	750	20.8	16.9	0.91	22.8	23.9	84.1	1.6	3.4	0.8	1.8	850	22.4	1.13	5.8	18.5	94.4	59.1	2.1
	4.5	1.2	2.7	640	20.8	15.9	0.85	24.4	23.7	80.5	1.4	4.5	1.2	2.7	725	22.7	1.18	5.6	18.6	98.9	61.7	2.2
	4.5	1.2	2.7	750	21.2	17.1	0.87	24.4	24.2	80.7	1.4	4.5	1.2	2.7	850	23.0	1.13	6.0	19.1	95.0	61.5	2.2
80	2.3	0.5	1.1	640	18.2	15.0	1.14	16.0	22.1	99.6	2.6	2.3	0.5	1.1	725	23.0	1.18	5.7	18.9	99.3	63.2	2.3
	2.3	0.5	1.1	750	18.6	16.0	1.16	16.0	22.5	100.0	2.6	2.3	0.5	1.1	850	23.3	1.13	6.0	19.4	95.4	62.7	2.2
	3.4	0.8	1.8	640	19.1	15.3	1.03	18.5	22.6	93.3	2.1	2.7	0.6	1.3	725	23.5	1.18	5.8	19.5	100.0	65.0	2.4
	3.4	0.8	1.8	750	19.5	16.4	1.05	18.5	23.1	93.6	2.2	2.7	0.6	1.3	850	23.8	1.13	6.2	20.0	96.0	65.0	2.3
	4.5	1.2	2.7	640	19.6	15.5	0.99	19.8	22.9	90.2	1.9	2.7	0.6	1.3	725	23.5	1.18	5.8	19.5	100.0	65.0	2.4
	4.5	1.2	2.7	750	20.0	16.6	1.00	19.9	23.4	90.4	2.0	2.7	0.6	1.3	850	23.8	1.13	6.2	20.0	96.0	65.0	2.3
90	2.3	0.5	1.2	640	16.9	14.4	1.30	13.0	21.3	109.0	3.4	1.6	0.4	1.0	725	23.5	1.18	5.8	19.5	100.0	65.0	2.4
	2.3	0.5	1.2	750	18.1	15.8	1.21	15.0	22.3	109.3	2.9	1.6	0.4	1.0	850	23.8	1.13	6.2	20.0	96.0	65.0	2.3
	3.4	0.8	1.9	640	17.8	14.8	1.19	14.9	21.8	102.8	2.8	1.6	0.4	1.0	725	23.5	1.18	5.8	19.5	100.0	65.0	2.4
	3.4	0.8	1.9	750	18.1	15.8	1.21	15.0	22.3	103.1	2.9	1.6	0.4	1.0	850	23.8	1.13	6.2	20.0	96.0	65.0	2.3
	4.5	1.2	2.7	640	18.2	15.0	1.14	16.0	22.1	99.8	2.6	1.6	0.4	1.0	725	23.5	1.18	5.8	19.5	100.0	65.0	2.4
	4.5	1.2	2.7	750	18.6	16.0	1.16	16.0	22.5	100.0	2.6	1.6	0.4	1.0	850	23.8	1.13	6.2	20.0	96.0	65.0	2.3
100	2.3	0.5	1.2	640	15.7	13.8	1.47	10.6	20.7	118.4	4.3	1.1	0.4	0.8	725	23.5	1.18	5.8	19.5	100.0	65.0	2.4
	2.3	0.5	1.2	750	16.0	14.8	1.50	10.7	21.1	118.8	4.4	1.1	0.4	0.8	850	23.8	1.13	6.2	20.0	96.0	65.0	2.3
	3.4	0.8	1.9	640	16.5	14.2	1.36	12.1	21.1	112.4	3.7	1.1	0.4	0.8	725	23.5	1.18	5.8	19.5	100.0	65.0	2.4
	3.4	0.8	1.9	750	16.8	15.2	1.38	12.1	21.5	112.6	3.7	1.1	0.4	0.8	850	23.8	1.13	6.2	20.0	96.0	65.0	2.3
	4.5	1.2	2.7	640	16.9	14.4	1.30	12.9	21.3	109.5	3.4	1.1	0.4	0.8	725	23.5	1.18	5.8	19.5	100.0	65.0	2.4
	4.5	1.2	2.7	750	17.2	15.4	1.33	13.0	21.7	109.7	3.5	1.1	0.4	0.8	850	23.8	1.13	6.2	20.0	96.0	65.0	2.3
110	2.3	0.5	1.1	640	14.6	13.2	1.66	8.8	20.3	128.0	5.3	0.9	0.3	0.6	725	23.5	1.18	5.8	19.5	100.0	65.0	2.4
	2.3	0.5	1.1	750	14.9	14.1	1.69	8.8	20.7	128.4	5.5	0.9	0.3	0.6	850	23.8	1.13	6.2	20.0	96.0	65.0	2.3
	3.4	0.8	1.8	640	15.3	13.6	1.54	9.9	20.5	122.1	4.7	0.9	0.3	0.6	725	23.5	1.18	5.8	19.5	100.0	65.0	2.4
	3.4	0.8	1.8	750	15.6	14.5	1.57	9.9	20.9	122.3	4.7	0.9	0.3	0.6	850	23.8	1.13	6.2	20.0	96.0	65.0	2.3
	4.5	1.1	2.6	640	15.6	13.7	1.48	10.5	20.7	119.2	4.3	0.9	0.3	0.6	725	23.5	1.18	5.8	19.5	100.0	65.0	2.4
	4.5	1.1	2.6	750	15.9	14.7	1.51	10.5	21.1	119.4	4.4	0.9	0.3	0.6	850	23.8	1.13	6.2	20.0	96.0	65.0	2.3
120	2.3	0.3	0.8	640	13.9	12.8	1.87	7.4	20.2	138.0	6.6	0.7	0.1	0.2	725	23.5	1.18	5.8	19.5	100.0	65.0	2.4
	2.3	0.3	0.8	750	14.2	13.7	1.90	7.4	20.6	138.4	6.7	0.7	0.1	0.2	850	23.8	1.13	6.2	20.0	96.0	65.0	2.3
	3.4	0.6	1.5	640	14.3	13.0	1.74	8.2	20.2	131.9	5.8	0.7	0.1	0.2	725	23.5	1.18	5.8	19.5	100.0	65.0	2.4
	3.4	0.6	1.5	750	14.6	13.9	1.77	8.2	20.6	132.1	5.9	0.7	0.1	0.2	850	23.8	1.13	6.2	20.0	96.0	65.0	2.3
	4.5	1.0	2.4	640	14.6	13.2	1.68	8.7	20.3	129.0	5.4	0.7	0.1	0.2	725	23.5	1.18	5.8	19.5	100.0	65.0	2.4
	4.5	1.0	2.4	750	14.9	14.1	1.71	8.7	20.7	129.2	5.5	0.7	0.1	0.2	850	23.8	1.13	6.2	20.0	96.0	65.0	2.3

Interpolation is permissible; extrapolation is not.
Flow is controlled to maintain minimum LWT 70° F in cooling and maximum LWT 65° F in heating.
Table does not reflect fan or pump power corrections for AHRI/ISO conditions.
For operation in the shaded areas, please see the Performance Data Selection Notes.

All performance is based upon the lower voltage of dual voltage rated units.
Operation at or below 40° F EWT is based on 15% methanol antifreeze solution.
See Performance correction tables for operating conditions other than those listed above.

Performance Data — GT-PC Model 026 - Full Load

Performance capacities shown in thousands of Btuh

Antifreeze use recommended in this range. Also Clip JW3 on DXM2 board.

EWT °F	Cooling - EAT 80/67°F											Heating - EAT 70°F										
	GPM	WPD		CFM	TC	SC	kW	EER	HR	LWT	HWC	GPM	WPD		CFM	HC	kW	COP	HE	LAT	LWT	HWC
		PSI	FT										PSI	FT								
20	1.3	0.5	1.1	730	29.0	19.8	1.13	25.7	32.8	70.0	1.4	6.0	3.7	8.6	820	16.4	1.49	3.2	11.3	88.5	16.2	1.6
	1.3	0.5	1.1	850	29.5	21.3	1.17	25.2	33.4	70.0	1.4	6.0	3.7	8.6	950	16.6	1.44	3.4	11.7	86.2	16.1	1.5
30	1.7	0.5	1.1	730	29.0	19.8	1.13	25.7	32.8	70.0	1.4	3.0	1.1	2.5	820	17.8	1.51	3.5	12.7	90.1	21.6	1.8
	1.7	0.5	1.1	850	29.5	21.3	1.17	25.2	33.4	70.0	1.4	3.0	1.1	2.5	950	18.1	1.47	3.6	13.1	87.6	21.3	1.8
	1.7	0.5	1.1	730	29.0	19.8	1.13	25.7	32.8	70.0	1.4	4.5	2.0	4.6	820	18.6	1.53	3.6	13.4	91.0	24.1	1.9
	1.7	0.5	1.1	850	29.5	21.3	1.17	25.2	33.4	70.0	1.4	4.5	2.0	4.6	950	18.9	1.48	3.7	13.8	88.4	23.9	1.9
	1.7	0.5	1.1	730	29.0	19.8	1.13	25.7	32.8	70.0	1.4	6.0	3.1	7.1	820	19.0	1.53	3.6	13.8	91.5	25.4	2.0
	1.7	0.5	1.1	850	29.5	21.3	1.17	25.2	33.4	70.0	1.4	6.0	3.1	7.1	950	19.3	1.49	3.8	14.2	88.8	25.3	1.9
40	2.2	0.5	1.2	730	29.0	19.8	1.13	25.7	32.8	70.0	1.4	3.0	0.9	2.0	820	20.4	1.56	3.8	15.0	93.0	30.0	2.2
	2.2	0.5	1.2	850	29.5	21.3	1.17	25.2	33.4	70.0	1.4	3.0	0.9	2.0	950	20.7	1.51	4.0	15.5	90.1	29.7	2.1
	2.2	0.5	1.2	730	29.0	19.8	1.13	25.7	32.8	70.0	1.4	4.5	1.6	3.8	820	21.3	1.57	4.0	16.0	94.1	32.9	2.3
	2.2	0.5	1.2	850	29.5	21.3	1.17	25.2	33.4	70.0	1.4	4.5	1.6	3.8	950	21.7	1.53	4.2	16.5	91.1	32.7	2.3
	2.2	0.5	1.2	730	29.0	19.8	1.13	25.7	32.8	70.0	1.4	6.0	2.6	6.0	820	21.9	1.58	4.0	16.5	94.7	34.5	2.4
	2.2	0.5	1.2	850	29.5	21.3	1.17	25.2	33.4	70.0	1.4	6.0	2.6	6.0	950	22.2	1.53	4.2	17.0	91.6	34.3	2.3
50	3.0	0.7	1.6	730	28.7	19.7	1.15	24.9	32.7	71.8	1.4	3.0	0.7	1.6	820	23.1	1.60	4.2	17.6	96.0	38.3	2.6
	3.0	0.7	1.6	850	29.2	21.2	1.20	24.4	33.3	72.2	1.5	3.0	0.7	1.6	950	23.4	1.55	4.4	18.1	92.8	37.9	2.5
	3.3	0.8	1.9	730	29.0	19.8	1.13	25.7	32.8	70.0	1.4	4.5	1.4	3.2	820	24.3	1.62	4.4	18.7	97.4	41.7	2.7
	3.3	0.8	1.9	850	29.5	21.3	1.17	25.2	33.4	70.0	1.4	4.5	1.4	3.2	950	24.6	1.57	4.6	19.3	94.0	41.4	2.6
	3.3	0.8	1.9	730	29.0	19.8	1.13	25.7	32.8	70.0	1.4	6.0	2.3	5.2	820	24.9	1.64	4.5	19.3	98.1	43.6	2.8
	3.3	0.8	1.9	850	29.5	21.3	1.17	25.2	33.4	70.0	1.4	6.0	2.3	5.2	950	25.3	1.59	4.7	19.9	94.7	43.4	2.7
60	3.0	0.7	1.5	730	27.5	19.2	1.28	21.5	31.9	81.3	1.9	3.0	0.7	1.5	820	25.9	1.65	4.6	20.2	99.2	46.5	2.9
	3.0	0.7	1.5	850	28.0	20.7	1.33	21.1	32.5	81.7	1.9	3.0	0.7	1.5	950	26.3	1.60	4.8	20.8	95.6	46.1	2.8
	4.5	1.3	2.9	730	28.4	19.6	1.19	24.0	32.5	74.4	1.5	4.5	1.3	2.9	820	27.3	1.68	4.8	21.6	100.8	50.4	3.1
	4.5	1.3	2.9	850	28.9	21.1	1.23	23.5	33.1	74.7	1.6	4.5	1.3	2.9	950	27.7	1.63	5.0	22.2	97.0	50.1	3.0
	6.0	2.0	4.7	730	28.8	19.8	1.14	25.3	32.7	70.9	1.4	6.0	2.0	4.7	820	28.1	1.69	4.9	22.3	101.7	52.6	3.2
	6.0	2.0	4.7	850	29.3	21.3	1.18	24.8	33.4	71.1	1.4	6.0	2.0	4.7	950	28.5	1.64	5.1	22.9	97.8	52.4	3.1
70	3.0	0.6	1.5	730	26.1	18.7	1.42	18.4	31.0	90.7	2.4	3.0	0.6	1.5	820	28.8	1.70	4.9	22.9	102.5	54.7	3.3
	3.0	0.6	1.5	850	26.6	20.1	1.47	18.0	31.6	91.1	2.4	3.0	0.6	1.5	950	29.2	1.65	5.2	23.6	98.5	54.3	3.2
	4.5	1.2	2.7	730	27.1	19.1	1.32	20.6	31.6	84.1	2.0	4.5	1.2	2.7	820	30.4	1.73	5.1	24.4	104.3	59.1	3.5
	4.5	1.2	2.7	850	27.6	20.5	1.37	20.2	32.3	84.3	2.0	4.5	1.2	2.7	950	30.8	1.68	5.4	25.1	100.0	58.8	3.4
	6.0	1.9	4.4	730	27.6	19.3	1.27	21.8	32.0	80.7	1.8	6.0	1.9	4.4	820	31.2	1.75	5.2	25.3	105.3	61.6	3.6
	6.0	1.9	4.4	850	28.1	20.7	1.31	21.4	32.6	80.9	1.9	6.0	1.9	4.4	950	31.7	1.70	5.5	25.9	100.9	61.4	3.5
80	3.0	0.7	1.5	730	24.6	18.0	1.58	15.6	30.0	100.0	3.0	3.0	0.7	1.5	820	31.6	1.76	5.3	25.6	105.7	62.9	3.6
	3.0	0.7	1.5	850	25.0	19.4	1.64	15.3	30.6	100.4	3.0	3.0	0.7	1.5	950	32.1	1.70	5.5	26.3	101.3	62.5	3.5
	4.5	1.2	2.7	730	25.7	18.5	1.47	17.5	30.7	93.6	2.5	3.6	0.9	2.0	820	32.5	1.77	5.4	26.4	106.7	65.0	3.7
	4.5	1.2	2.7	850	26.1	19.9	1.52	17.2	31.3	93.9	2.6	3.6	0.9	2.0	950	33.0	1.72	5.6	27.1	102.1	65.0	3.6
	6.0	1.8	4.2	730	26.2	18.7	1.41	18.5	31.0	90.3	2.3	3.6	0.9	2.0	820	32.5	1.77	5.4	26.4	106.7	65.0	3.7
	6.0	1.8	4.2	850	26.7	20.1	1.46	18.2	31.7	90.6	2.4	3.6	0.9	2.0	950	33.0	1.72	5.6	27.1	102.1	65.0	3.6
90	3.0	0.7	1.6	730	23.0	17.4	1.76	13.1	29.0	109.4	3.6	2.2	0.5	1.2	820	32.5	1.77	5.4	26.4	106.7	65.0	3.7
	3.0	0.7	1.6	850	24.5	19.2	1.70	14.5	30.3	109.8	3.3	2.2	0.5	1.2	950	33.0	1.72	5.6	27.1	102.1	65.0	3.6
	4.5	1.2	2.7	730	24.1	17.8	1.64	14.7	29.7	103.2	3.2	2.2	0.5	1.2	820	32.5	1.77	5.4	26.4	106.7	65.0	3.7
	4.5	1.2	2.7	850	24.5	19.2	1.70	14.5	30.3	103.5	3.3	2.2	0.5	1.2	950	33.0	1.72	5.6	27.1	102.1	65.0	3.6
	6.0	1.8	4.1	730	24.6	18.0	1.58	15.6	30.0	100.0	3.0	2.2	0.5	1.2	820	32.5	1.77	5.4	26.4	106.7	65.0	3.7
	6.0	1.8	4.1	850	25.1	19.4	1.63	15.3	30.6	100.2	3.0	2.2	0.5	1.2	950	33.0	1.72	5.6	27.1	102.1	65.0	3.6
100	3.0	0.7	1.6	730	21.5	16.9	1.95	11.0	28.1	118.8	4.4	1.5	0.4	1.0	820	32.5	1.77	5.4	26.4	106.7	65.0	3.7
	3.0	0.7	1.6	850	21.8	18.1	2.02	10.8	28.7	119.2	4.5	1.5	0.4	1.0	950	33.0	1.72	5.6	27.1	102.1	65.0	3.6
	4.5	1.2	2.7	730	22.5	17.2	1.82	12.3	28.7	112.8	3.9	1.5	0.4	1.0	820	32.5	1.77	5.4	26.4	106.7	65.0	3.7
	4.5	1.2	2.7	850	22.9	18.5	1.89	12.1	29.3	113.0	4.0	1.5	0.4	1.0	950	33.0	1.72	5.6	27.1	102.1	65.0	3.6
	6.0	1.8	4.1	730	23.0	17.4	1.76	13.1	29.0	109.7	3.7	1.5	0.4	1.0	820	32.5	1.77	5.4	26.4	106.7	65.0	3.7
	6.0	1.8	4.1	850	23.4	18.7	1.82	12.8	29.6	109.9	3.7	1.5	0.4	1.0	950	33.0	1.72	5.6	27.1	102.1	65.0	3.6
110	3.0	0.7	1.5	730	20.0	16.4	2.17	9.2	27.4	128.3	5.3	1.2	0.3	0.7	820	32.5	1.77	5.4	26.4	106.7	65.0	3.7
	3.0	0.7	1.5	850	20.3	17.7	2.25	9.0	28.0	128.7	5.4	1.2	0.3	0.7	950	33.0	1.72	5.6	27.1	102.1	65.0	3.6
	4.5	1.1	2.6	730	20.9	16.7	2.03	10.3	27.8	122.4	4.7	1.2	0.3	0.7	820	32.5	1.77	5.4	26.4	106.7	65.0	3.7
	4.5	1.1	2.6	850	21.3	17.9	2.10	10.1	28.5	122.6	4.8	1.2	0.3	0.7	950	33.0	1.72	5.6	27.1	102.1	65.0	3.6
	6.0	1.7	4.0	730	21.4	16.8	1.96	10.9	28.1	119.4	4.5	1.2	0.3	0.7	820	32.5	1.77	5.4	26.4	106.7	65.0	3.7
	6.0	1.7	4.0	850	21.8	18.1	2.03	10.7	28.7	119.6	4.5	1.2	0.3	0.7	950	33.0	1.72	5.6	27.1	102.1	65.0	3.6
120	3.0	0.5	1.2	730	18.7	16.2	2.41	7.7	26.9	137.9	6.3	1.0	0.1	0.3	820	32.5	1.77	5.4	26.4	106.7	65.0	3.7
	3.0	0.5	1.2	850	19.0	17.4	2.50	7.6	27.5	138.3	6.4	1.0	0.1	0.3	950	33.0	1.72	5.6	27.1	102.1	65.0	3.6
	4.5	1.0	2.4	730	19.5	16.3	2.26	8.6	27.2	132.1	5.6	1.0	0.1	0.3	820	32.5	1.77	5.4	26.4	106.7	65.0	3.7
	4.5	1.0	2.4	850	19.8	17.5	2.34	8.5	27.8	132.3	5.8	1.0	0.1	0.3	950	33.0	1.72	5.6	27.1	102.1	65.0	3.6
	6.0	1.7	3.9	730	19.9	16.4	2.18	9.1	27.3	129.1	5.3	1.0	0.1	0.3	820	32.5	1.77	5.4	26.4	106.7	65.0	3.7
	6.0	1.7	3.9	850	20.2	17.6	2.26	8.9	28.0	129.3	5.5	1.0	0.1	0.3	950	33.0	1.72	5.6	27.1	102.1	65.0	3.6

Interpolation is permissible; extrapolation is not.
Flow is controlled to maintain minimum LWT 70° F in cooling and maximum LWT 65° F in heating.
Table does not reflect fan or pump power corrections for AHRI/ISO conditions.
For operation in the shaded areas, please see the Performance Data Selection Notes.

All performance is based upon the lower voltage of dual voltage rated units.
Operation at or below 40° F EWT is based on 15% methanol antifreeze solution.
See Performance correction tables for operating conditions other than those listed above.

Performance Data — GT-PC Model 038 - Part Load

Performance capacities shown in thousands of Btuh

Antifreeze use recommended in this range. Also Clip JW3 on DXM2 board.

EWT °F	Cooling - EAT 80/67°F											Heating - EAT 70°F										
	GPM	WPD		CFM	TC	SC	kW	EER	HR	LWT	HWC	GPM	WPD		CFM	HC	kW	COP	HE	LAT	LWT	HWC
		PSI	FT										PSI	FT								
20	1.4	0.7	1.7	860	32.0	21.1	0.99	32.4	35.4	70.0	1.2	6.0	4.9	11.2	860	17.2	1.56	3.2	11.8	88.5	16.1	1.7
	1.4	0.7	1.7	1000	32.7	22.6	1.01	32.5	36.1	70.0	1.2	6.0	4.9	11.2	1000	17.4	1.49	3.4	12.3	86.1	15.9	1.7
30	1.8	0.7	1.7	860	32.0	21.1	0.99	32.4	35.4	70.0	1.2	3.0	1.5	3.4	860	18.8	1.57	3.5	13.5	90.3	21.0	1.9
	1.8	0.7	1.7	1000	32.7	22.6	1.01	32.5	36.1	70.0	1.2	3.0	1.5	3.4	1000	19.1	1.50	3.7	14.0	87.7	20.7	1.8
	1.8	0.7	1.7	860	32.0	21.1	0.99	32.4	35.4	70.0	1.2	4.5	2.6	6.0	860	19.8	1.57	3.7	14.4	91.3	23.6	2.0
	1.8	0.7	1.7	1000	32.7	22.6	1.01	32.5	36.1	70.0	1.2	4.5	2.6	6.0	1000	20.1	1.51	3.9	14.9	88.6	23.4	1.9
	1.8	0.7	1.7	860	32.0	21.1	0.99	32.4	35.4	70.0	1.2	6.0	3.8	8.9	860	20.3	1.57	3.8	14.9	91.9	25.0	2.0
	1.8	0.7	1.7	1000	32.7	22.6	1.01	32.5	36.1	70.0	1.2	6.0	3.8	8.9	1000	20.6	1.51	4.0	15.4	89.1	24.9	2.0
40	2.4	0.7	1.7	860	32.0	21.1	0.99	32.4	35.4	70.0	1.2	3.0	1.1	2.5	860	21.7	1.58	4.0	16.3	93.4	29.1	2.2
	2.4	0.7	1.7	1000	32.7	22.6	1.01	32.5	36.1	70.0	1.2	3.0	1.1	2.5	1000	22.0	1.52	4.3	16.8	90.4	28.8	2.1
	2.4	0.7	1.7	860	32.0	21.1	0.99	32.4	35.4	70.0	1.2	4.5	2.0	4.7	860	22.9	1.59	4.2	17.4	94.6	32.2	2.3
	2.4	0.7	1.7	1000	32.7	22.6	1.01	32.5	36.1	70.0	1.2	4.5	2.0	4.7	1000	23.2	1.52	4.5	18.0	91.5	32.0	2.2
	2.4	0.7	1.7	860	32.0	21.1	0.99	32.4	35.4	70.0	1.2	6.0	3.1	7.2	860	23.5	1.59	4.3	18.1	95.3	34.0	2.4
	2.4	0.7	1.7	1000	32.7	22.6	1.01	32.5	36.1	70.0	1.2	6.0	3.1	7.2	1000	23.8	1.53	4.6	18.6	92.1	33.8	2.3
50	3.0	0.9	2.0	860	31.6	21.0	1.05	30.2	35.2	73.5	1.4	3.0	0.9	2.0	860	24.6	1.60	4.5	19.1	96.5	37.2	2.5
	3.0	0.9	2.0	1000	32.3	22.5	1.07	30.3	35.9	73.9	1.4	3.0	0.9	2.0	1000	24.9	1.53	4.8	19.7	93.1	36.9	2.4
	3.6	1.2	2.7	860	32.0	21.1	0.99	32.4	35.4	70.0	1.2	4.5	1.7	3.9	860	26.0	1.61	4.7	20.5	98.0	40.9	2.6
	3.6	1.2	2.7	1000	32.7	22.6	1.01	32.5	36.1	70.0	1.2	4.5	1.7	3.9	1000	26.3	1.54	5.0	21.1	94.4	40.6	2.5
	3.6	1.2	2.7	860	32.0	21.1	0.99	32.4	35.4	70.0	1.2	6.0	2.7	6.2	860	26.7	1.61	4.9	21.2	98.8	42.9	2.7
	3.6	1.2	2.7	1000	32.7	22.6	1.01	32.5	36.1	70.0	1.2	6.0	2.7	6.2	1000	27.1	1.55	5.1	21.8	95.1	42.7	2.6
60	3.0	0.8	1.8	860	30.3	20.7	1.21	25.0	34.4	82.9	1.9	3.0	0.8	1.8	860	27.5	1.62	5.0	22.0	99.6	45.3	2.7
	3.0	0.8	1.8	1000	30.9	22.1	1.23	25.0	35.1	83.4	2.0	3.0	0.8	1.8	1000	27.9	1.55	5.3	22.6	95.9	44.9	2.7
	4.5	1.5	3.5	860	31.4	21.0	1.08	29.1	35.1	75.6	1.5	4.5	1.5	3.5	860	29.1	1.63	5.2	23.6	101.4	49.5	2.9
	4.5	1.5	3.5	1000	32.0	22.4	1.10	29.2	35.8	75.9	1.5	4.5	1.5	3.5	1000	29.5	1.56	5.5	24.2	97.4	49.2	2.8
	6.0	2.4	5.5	860	31.8	21.1	1.02	31.3	35.3	71.8	1.3	6.0	2.4	5.5	860	30.0	1.63	5.4	24.4	102.3	51.9	2.9
	6.0	2.4	5.5	1000	32.5	22.6	1.04	31.4	36.0	72.0	1.3	6.0	2.4	5.5	1000	30.4	1.57	5.7	25.1	98.2	51.6	2.9
70	3.0	0.8	1.9	860	28.6	20.1	1.40	20.4	33.4	92.3	2.7	3.0	0.8	1.9	860	30.5	1.64	5.5	24.9	102.8	53.4	3.0
	3.0	0.8	1.9	1000	29.2	21.5	1.43	20.5	34.1	92.7	2.7	3.0	0.8	1.9	1000	30.9	1.57	5.8	25.6	98.6	53.0	2.9
	4.5	1.5	3.4	860	29.9	20.6	1.25	23.9	34.2	85.2	2.1	4.5	1.5	3.4	860	32.3	1.65	5.7	26.7	104.8	58.1	3.1
	4.5	1.5	3.4	1000	30.5	22.0	1.28	24.0	34.9	85.5	2.1	4.5	1.5	3.4	1000	32.8	1.58	6.1	27.4	100.4	57.8	3.0
	6.0	2.3	5.3	860	30.5	20.7	1.18	25.9	34.6	81.5	1.8	6.0	2.3	5.3	860	33.3	1.66	5.9	27.7	105.9	60.8	3.2
	6.0	2.3	5.3	1000	31.2	22.2	1.20	25.9	35.3	81.8	1.8	6.0	2.3	5.3	1000	33.8	1.59	6.2	28.4	101.3	60.5	3.1
80	3.0	0.9	2.0	860	26.7	19.4	1.61	16.6	32.2	101.5	3.6	3.0	0.9	2.0	860	33.5	1.66	5.9	27.8	106.1	61.4	3.2
	3.0	0.9	2.0	1000	27.3	20.8	1.64	16.6	32.9	101.9	3.7	3.0	0.9	2.0	1000	34.0	1.59	6.3	28.5	101.5	61.0	3.1
	4.5	1.5	3.4	860	28.1	20.0	1.45	19.4	33.1	94.7	2.9	4.0	1.3	2.9	860	35.0	1.67	6.1	29.3	107.7	65.0	3.3
	4.5	1.5	3.4	1000	28.7	21.4	1.48	19.4	33.8	95.0	3.0	4.0	1.3	2.9	1000	35.5	1.60	6.5	30.1	102.9	65.0	3.2
	6.0	2.2	5.2	860	28.9	20.2	1.37	21.0	33.5	91.2	2.6	4.0	1.3	2.9	860	35.0	1.67	6.1	29.3	107.7	65.0	3.3
	6.0	2.2	5.2	1000	29.4	21.6	1.40	21.1	34.2	91.4	2.6	4.0	1.3	2.9	1000	35.5	1.60	6.5	30.1	102.9	65.0	3.2
90	3.0	0.9	2.1	860	24.7	18.6	1.84	13.5	31.0	110.7	4.7	2.4	0.7	1.7	860	35.0	1.67	6.1	29.3	107.7	65.0	3.3
	3.0	0.9	2.1	1000	26.7	20.6	1.70	15.7	32.5	111.1	4.0	2.4	0.7	1.7	1000	35.5	1.60	6.5	30.1	102.9	65.0	3.2
	4.5	1.5	3.5	860	26.2	19.2	1.67	15.7	31.9	104.2	3.9	2.4	0.7	1.7	860	35.0	1.67	6.1	29.3	107.7	65.0	3.3
	4.5	1.5	3.5	1000	26.7	20.6	1.70	15.7	32.5	104.4	4.0	2.4	0.7	1.7	1000	35.5	1.60	6.5	30.1	102.9	65.0	3.2
	6.0	2.2	5.2	860	26.9	19.5	1.59	16.9	32.3	100.8	3.5	2.4	0.7	1.7	860	35.0	1.67	6.1	29.3	107.7	65.0	3.3
	6.0	2.2	5.2	1000	27.5	20.9	1.62	17.0	33.0	101.0	3.6	2.4	0.7	1.7	1000	35.5	1.60	6.5	30.1	102.9	65.0	3.2
100	3.0	0.9	2.1	860	22.7	17.7	2.07	11.0	29.8	119.9	6.1	1.7	0.5	1.2	860	35.0	1.67	6.1	29.3	107.7	65.0	3.3
	3.0	0.9	2.1	1000	23.2	19.0	2.11	11.0	30.4	120.3	6.2	1.7	0.5	1.2	1000	35.5	1.60	6.5	30.1	102.9	65.0	3.2
	4.5	1.5	3.5	860	24.1	18.3	1.91	12.6	30.6	113.6	5.1	1.7	0.5	1.2	860	35.0	1.67	6.1	29.3	107.7	65.0	3.3
	4.5	1.5	3.5	1000	24.6	19.6	1.94	12.7	31.2	113.9	5.2	1.7	0.5	1.2	1000	35.5	1.60	6.5	30.1	102.9	65.0	3.2
	6.0	2.2	5.1	860	24.8	18.7	1.82	13.6	31.0	110.3	4.7	1.7	0.5	1.2	860	35.0	1.67	6.1	29.3	107.7	65.0	3.3
	6.0	2.2	5.1	1000	25.3	20.0	1.86	13.6	31.7	110.6	4.8	1.7	0.5	1.2	1000	35.5	1.60	6.5	30.1	102.9	65.0	3.2
110	3.0	0.8	1.8	860	20.8	16.9	2.32	9.0	28.8	129.2	7.6	1.3	0.3	0.6	860	35.0	1.67	6.1	29.3	107.7	65.0	3.3
	3.0	0.8	1.8	1000	21.3	18.0	2.36	9.0	29.3	129.6	7.7	1.3	0.3	0.6	1000	35.5	1.60	6.5	30.1	102.9	65.0	3.2
	4.5	1.4	3.2	860	22.1	17.4	2.15	10.2	29.4	123.1	6.5	1.3	0.3	0.6	860	35.0	1.67	6.1	29.3	107.7	65.0	3.3
	4.5	1.4	3.2	1000	22.5	18.7	2.19	10.3	30.0	123.3	6.7	1.3	0.3	0.6	1000	35.5	1.60	6.5	30.1	102.9	65.0	3.2
	6.0	2.1	4.9	860	22.8	17.7	2.07	11.0	29.8	119.9	6.0	1.3	0.3	0.6	860	35.0	1.67	6.1	29.3	107.7	65.0	3.3
	6.0	2.1	4.9	1000	23.2	19.0	2.11	11.0	30.4	120.1	6.2	1.3	0.3	0.6	1000	35.5	1.60	6.5	30.1	102.9	65.0	3.2
120	3.0	0.5	1.1	860	19.2	16.1	2.57	7.5	28.0	138.7	9.4	1.1	0.1	0.2	860	35.0	1.67	6.1	29.3	107.7	65.0	3.3
	3.0	0.5	1.1	1000	19.6	17.2	2.62	7.5	28.5	139.0	9.5	1.1	0.1	0.2	1000	35.5	1.60	6.5	30.1	102.9	65.0	3.2
	4.5	1.1	2.6	860	20.2	16.6	2.41	8.4	28.5	132.6	8.2	1.1	0.1	0.2	860	35.0	1.67	6.1	29.3	107.7	65.0	3.3
	4.5	1.1	2.6	1000	20.6	17.7	2.45	8.4	29.0	132.9	8.4	1.1	0.1	0.2	1000	35.5	1.60	6.5	30.1	102.9	65.0	3.2
	6.0	1.9	4.4	860	20.8	16.8	2.33	8.9	28.7	129.6	7.6	1.1	0.1	0.2	860	35.0	1.67	6.1	29.3	107.7	65.0	3.3
	6.0	1.9	4.4	1000	21.2	18.0	2.37	9.0	29.3	129.8	7.8	1.1	0.1	0.2	1000	35.5	1.60	6.5	30.1	102.9	65.0	3.2

Interpolation is permissible; extrapolation is not.
Flow is controlled to maintain minimum LWT 70° F in cooling and maximum LWT 65° F in heating.
Table does not reflect fan or pump power corrections for AHRI/ISO conditions.
For operation in the shaded areas, please see the Performance Data Selection Notes.

All performance is based upon the lower voltage of dual voltage rated units.
Operation at or below 40° F EWT is based on 15% methanol antifreeze solution.
See Performance correction tables for operating conditions other than those listed above.

Performance Data — GT-PC Model 038 - Full Load

Performance capacities shown in thousands of Btuh

Antifreeze use recommended in this range. Also Clip JW3 on DXM2 board.

EWT °F	Cooling - EAT 80/67°F											Heating - EAT 70°F										
	GPM	WPD		CFM	TC	SC	kW	EER	HR	LWT	HWC	GPM	WPD		CFM	HC	kW	COP	HE	LAT	LWT	HWC
		PSI	FT										PSI	FT								
20	2.0	1.2	2.7	1080	44.0	27.4	1.65	26.7	49.6	70.0	1.9	9.0	8.3	19.1	1080	25.6	2.09	3.6	18.5	91.9	15.9	2.1
	2.0	1.2	2.7	1250	44.8	29.4	1.71	26.3	50.6	70.0	1.9	9.0	8.3	19.1	1250	26.0	2.02	3.8	19.1	89.2	15.8	2.1
30	2.5	1.2	2.7	1080	44.0	27.4	1.65	26.7	49.6	70.0	1.9	4.5	2.6	6.0	1080	27.9	2.12	3.9	20.7	93.9	20.8	2.4
	2.5	1.2	2.7	1250	44.8	29.4	1.71	26.3	50.6	70.0	1.9	4.5	2.6	6.0	1250	28.3	2.05	4.0	21.3	91.0	20.5	2.4
	2.5	1.2	2.7	1080	44.0	27.4	1.65	26.7	49.6	70.0	1.9	6.8	4.5	10.5	1080	29.2	2.14	4.0	21.9	95.1	23.5	2.6
	2.5	1.2	2.7	1250	44.8	29.4	1.71	26.3	50.6	70.0	1.9	6.8	4.5	10.5	1250	29.7	2.07	4.2	22.6	92.0	23.3	2.5
	2.5	1.2	2.7	1080	44.0	27.4	1.65	26.7	49.6	70.0	1.9	9.0	6.9	16.0	1080	30.0	2.15	4.1	22.6	95.7	25.0	2.7
	2.5	1.2	2.7	1250	44.8	29.4	1.71	26.3	50.6	70.0	1.9	9.0	6.9	16.0	1250	30.4	2.08	4.3	23.3	92.5	24.8	2.6
40	3.4	1.3	3.0	1080	44.0	27.4	1.65	26.7	49.6	70.0	1.9	4.5	2.0	4.7	1080	31.9	2.18	4.3	24.4	97.3	29.1	2.9
	3.4	1.3	3.0	1250	44.8	29.4	1.71	26.3	50.6	70.0	1.9	4.5	2.0	4.7	1250	32.4	2.12	4.5	25.2	94.0	28.8	2.9
	3.4	1.3	3.0	1080	44.0	27.4	1.65	26.7	49.6	70.0	1.9	6.8	3.8	8.7	1080	33.5	2.22	4.4	25.9	98.7	32.3	3.1
	3.4	1.3	3.0	1250	44.8	29.4	1.71	26.3	50.6	70.0	1.9	6.8	3.8	8.7	1250	34.0	2.15	4.6	26.7	95.2	32.1	3.0
	3.4	1.3	3.0	1080	44.0	27.4	1.65	26.7	49.6	70.0	1.9	9.0	5.9	13.6	1080	34.4	2.23	4.5	26.7	99.5	34.1	3.2
	3.4	1.3	3.0	1250	44.8	29.4	1.71	26.3	50.6	70.0	1.9	9.0	5.9	13.6	1250	34.9	2.16	4.7	27.5	95.8	33.9	3.2
50	4.5	1.7	3.9	1080	43.7	27.3	1.68	26.0	49.5	72.0	1.9	4.5	1.7	3.9	1080	35.9	2.27	4.6	28.2	100.8	37.5	3.4
	4.5	1.7	3.9	1250	44.5	29.3	1.75	25.5	50.4	72.4	2.0	4.5	1.7	3.9	1250	36.5	2.20	4.9	29.0	97.0	37.1	3.3
	5.1	2.0	4.7	1080	44.0	27.4	1.65	26.7	49.6	70.0	1.9	6.8	3.2	7.5	1080	37.8	2.31	4.8	29.9	102.4	41.1	3.7
	5.1	2.0	4.7	1250	44.8	29.4	1.71	26.3	50.6	70.0	1.9	6.8	3.2	7.5	1250	38.4	2.24	5.0	30.7	98.4	40.9	3.6
	5.1	2.0	4.7	1080	44.0	27.4	1.65	26.7	49.6	70.0	1.9	9.0	5.2	11.9	1080	38.8	2.33	4.9	30.8	103.3	43.1	3.8
	5.1	2.0	4.7	1250	44.8	29.4	1.71	26.3	50.6	70.0	1.9	9.0	5.2	11.9	1250	39.4	2.26	5.1	31.7	99.2	43.0	3.7
60	4.5	1.5	3.5	1080	42.2	26.8	1.86	22.7	48.5	81.6	2.6	4.5	1.5	3.5	1080	40.0	2.36	5.0	31.9	104.3	45.8	3.9
	4.5	1.5	3.5	1250	42.9	28.8	1.93	22.3	49.5	82.0	2.7	4.5	1.5	3.5	1250	40.6	2.29	5.2	32.8	100.1	45.4	3.8
	6.8	2.9	6.7	1080	43.4	27.2	1.73	25.1	49.3	74.6	2.1	6.8	2.9	6.7	1080	42.1	2.42	5.1	33.9	106.1	50.0	4.2
	6.8	2.9	6.7	1250	44.1	29.2	1.79	24.7	50.2	74.9	2.1	6.8	2.9	6.7	1250	42.8	2.34	5.4	34.8	101.7	49.7	4.1
	9.0	4.7	10.8	1080	43.9	27.3	1.67	26.3	49.6	71.0	1.9	9.0	4.7	10.8	1080	43.3	2.44	5.2	34.9	107.1	52.2	4.3
	9.0	4.7	10.8	1250	44.6	29.4	1.73	25.9	50.5	71.2	1.9	9.0	4.7	10.8	1250	43.9	2.37	5.4	35.8	102.5	52.0	4.2
70	4.5	1.5	3.4	1080	40.2	26.0	2.06	19.5	47.3	91.0	3.4	4.5	1.5	3.4	1080	44.1	2.47	5.2	35.7	107.8	54.1	4.4
	4.5	1.5	3.4	1250	40.9	28.0	2.14	19.2	48.2	91.4	3.5	4.5	1.5	3.4	1250	44.8	2.39	5.5	36.6	103.2	53.7	4.3
	6.8	2.7	6.3	1080	41.7	26.6	1.91	21.8	48.2	84.3	2.8	6.8	2.7	6.3	1080	46.5	2.53	5.4	37.8	109.8	58.8	4.7
	6.8	2.7	6.3	1250	42.4	28.6	1.98	21.4	49.2	84.6	2.9	6.8	2.7	6.3	1250	47.2	2.45	5.6	38.8	104.9	58.5	4.5
	9.0	4.4	10.1	1080	42.4	26.8	1.84	23.0	48.6	80.8	2.5	9.0	4.4	10.1	1080	47.8	2.56	5.5	39.0	111.0	61.3	4.8
	9.0	4.4	10.1	1250	43.1	28.8	1.91	22.6	49.6	81.0	2.6	9.0	4.4	10.1	1250	48.5	2.48	5.7	40.0	105.9	61.1	4.7
80	4.5	1.5	3.4	1080	38.0	25.2	2.29	16.6	45.8	100.4	4.3	4.5	1.5	3.4	1080	48.2	2.58	5.5	39.4	111.3	62.5	4.9
	4.5	1.5	3.4	1250	38.6	27.1	2.37	16.3	46.7	100.8	4.4	4.5	1.5	3.4	1250	49.0	2.50	5.7	40.4	106.3	62.0	4.7
	6.8	2.7	6.2	1080	39.6	25.8	2.13	18.6	46.8	93.9	3.6	5.6	2.0	4.6	1080	49.7	2.62	5.6	40.8	112.6	65.0	5.0
	6.8	2.7	6.2	1250	40.3	27.7	2.20	18.3	47.8	94.2	3.7	5.6	2.0	4.6	1250	50.5	2.54	5.8	41.8	107.4	65.0	4.9
	9.0	4.2	9.7	1080	40.4	26.1	2.05	19.7	47.4	90.5	3.3	5.6	2.0	4.6	1080	49.7	2.62	5.6	40.8	112.6	65.0	5.0
	9.0	4.2	9.7	1250	41.1	28.1	2.12	19.4	48.3	90.7	3.4	5.6	2.0	4.6	1250	50.5	2.54	5.8	41.8	107.4	65.0	4.9
90	4.5	1.5	3.5	1080	35.6	24.1	2.54	14.0	44.3	109.7	5.3	3.3	1.0	2.4	1080	49.7	2.62	5.6	40.8	112.6	65.0	5.0
	4.5	1.5	3.5	1250	37.9	26.7	2.45	15.4	46.2	110.1	4.7	3.3	1.0	2.4	1250	50.5	2.54	5.8	41.8	107.4	65.0	4.9
	6.8	2.6	6.1	1080	37.2	24.9	2.37	15.7	45.3	103.4	4.6	3.3	1.0	2.4	1080	49.7	2.62	5.6	40.8	112.6	65.0	5.0
	6.8	2.6	6.1	1250	37.9	26.7	2.45	15.4	46.2	103.7	4.7	3.3	1.0	2.4	1250	50.5	2.54	5.8	41.8	107.4	65.0	4.9
	9.0	4.1	9.5	1080	38.1	25.2	2.28	16.7	45.9	100.2	4.3	3.3	1.0	2.4	1080	49.7	2.62	5.6	40.8	112.6	65.0	5.0
	9.0	4.1	9.5	1250	38.7	27.1	2.36	16.4	46.8	100.4	4.3	3.3	1.0	2.4	1250	50.5	2.54	5.8	41.8	107.4	65.0	4.9
100	4.5	1.5	3.5	1080	33.2	23.0	2.82	11.8	42.8	119.0	6.5	2.4	0.7	1.7	1080	49.7	2.62	5.6	40.8	112.6	65.0	5.0
	4.5	1.5	3.5	1250	33.7	24.8	2.92	11.6	43.7	119.4	6.7	2.4	0.7	1.7	1250	50.5	2.54	5.8	41.8	107.4	65.0	4.9
	6.8	2.6	6.1	1080	34.8	23.8	2.63	13.2	43.7	113.0	5.7	2.4	0.7	1.7	1080	49.7	2.62	5.6	40.8	112.6	65.0	5.0
	6.8	2.6	6.1	1250	35.4	25.6	2.73	13.0	44.7	113.2	5.8	2.4	0.7	1.7	1250	50.5	2.54	5.8	41.8	107.4	65.0	4.9
	9.0	4.1	9.4	1080	35.6	24.1	2.54	14.0	44.3	109.8	5.3	2.4	0.7	1.7	1080	49.7	2.62	5.6	40.8	112.6	65.0	5.0
	9.0	4.1	9.4	1250	36.2	26.0	2.63	13.7	45.2	110.0	5.4	2.4	0.7	1.7	1250	50.5	2.54	5.8	41.8	107.4	65.0	4.9
110	4.5	1.4	3.2	1080	30.8	21.9	3.11	9.9	41.5	128.4	7.9	1.9	0.4	1.0	1080	49.7	2.62	5.6	40.8	112.6	65.0	5.0
	4.5	1.4	3.2	1250	31.4	23.5	3.23	9.7	42.4	128.8	8.0	1.9	0.4	1.0	1250	50.5	2.54	5.8	41.8	107.4	65.0	4.9
	6.8	2.5	5.9	1080	32.3	22.6	2.92	11.1	42.3	122.5	7.0	1.9	0.4	1.0	1080	49.7	2.62	5.6	40.8	112.6	65.0	5.0
	6.8	2.5	5.9	1250	32.9	24.3	3.03	10.9	43.2	122.8	7.1	1.9	0.4	1.0	1250	50.5	2.54	5.8	41.8	107.4	65.0	4.9
	9.0	4.0	9.2	1080	33.1	23.0	2.83	11.7	42.7	119.5	6.6	1.9	0.4	1.0	1080	49.7	2.62	5.6	40.8	112.6	65.0	5.0
	9.0	4.0	9.2	1250	33.7	24.7	2.93	11.5	43.6	119.7	6.7	1.9	0.4	1.0	1250	50.5	2.54	5.8	41.8	107.4	65.0	4.9
120	4.5	1.1	2.6	1080	28.7	20.8	3.43	8.4	40.4	138.0	9.4	1.5	0.1	0.2	1080	49.7	2.62	5.6	40.8	112.6	65.0	5.0
	4.5	1.1	2.6	1250	29.2	22.3	3.55	8.2	41.4	138.4	9.6	1.5	0.1	0.2	1250	50.5	2.54	5.8	41.8	107.4	65.0	4.9
	6.8	2.4	5.4	1080	30.0	21.4	3.23	9.3	41.0	132.2	8.4	1.5	0.1	0.2	1080	49.7	2.62	5.6	40.8	112.6	65.0	5.0
	6.8	2.4	5.4	1250	30.5	23.1	3.35	9.1	41.9	132.4	8.6	1.5	0.1	0.2	1250	50.5	2.54	5.8	41.8	107.4	65.0	4.9
	9.0	3.9	8.9	1080	30.7	21.8	3.13	9.8	41.4	129.2	7.9	1.5	0.1	0.2	1080	49.7	2.62	5.6	40.8	112.6	65.0	5.0
	9.0	3.9	8.9	1250	31.2	23.4	3.25	9.6	42.3	129.4	8.1	1.5	0.1	0.2	1250	50.5	2.54	5.8	41.8	107.4	65.0	4.9

Interpolation is permissible; extrapolation is not.
Flow is controlled to maintain minimum LWT 70° F in cooling and maximum LWT 65° F in heating.
Table does not reflect fan or pump power corrections for AHRI/ISO conditions.
For operation in the shaded areas, please see the Performance Data Selection Notes.

All performance is based upon the lower voltage of dual voltage rated units.
Operation at or below 40° F EWT is based on 15% methanol antifreeze solution.
See Performance correction tables for operating conditions other than those listed above.

Performance Data — GT-PC Model 049 - Part Load

Performance capacities shown in thousands of Btuh

Antifreeze use recommended in this range. Also Clip JW3 on DXM2 board.

EWT °F	Cooling - EAT 80/67°F											Heating - EAT 70°F										
	GPM	WPD		CFM	TC	SC	kW	EER	HR	LWT	HWC	GPM	WPD		CFM	HC	kW	COP	HE	LAT	LWT	HWC
		PSI	FT										PSI	FT								
20	1.9	0.1	0.2	1150	41.6	30.3	1.38	30.2	46.3	70.0	1.5	9.0	3.2	7.4	1150	22.8	2.26	3.0	15.1	88.4	16.6	2.6
	1.9	0.1	0.2	1350	42.4	32.4	1.40	30.3	47.2	70.0	1.5	9.0	3.2	7.4	1350	23.1	2.17	3.1	15.7	85.9	16.5	2.5
30	2.4	0.1	0.2	1150	41.6	30.3	1.38	30.2	46.3	70.0	1.5	4.5	0.6	1.4	1150	25.1	2.28	3.2	17.3	90.2	22.3	2.7
	2.4	0.1	0.2	1350	42.4	32.4	1.40	30.3	47.2	70.0	1.5	4.5	0.6	1.4	1350	25.4	2.18	3.4	18.0	87.4	22.0	2.6
	2.4	0.1	0.2	1150	41.6	30.3	1.38	30.2	46.3	70.0	1.5	6.8	1.6	3.6	1150	26.1	2.28	3.4	18.3	91.0	24.6	2.7
	2.4	0.1	0.2	1350	42.4	32.4	1.40	30.3	47.2	70.0	1.5	6.8	1.6	3.6	1350	26.5	2.19	3.5	19.0	88.2	24.4	2.6
	2.4	0.1	0.2	1150	41.6	30.3	1.38	30.2	46.3	70.0	1.5	9.0	2.7	6.4	1150	26.7	2.29	3.4	18.9	91.5	25.8	2.7
	2.4	0.1	0.2	1350	42.4	32.4	1.40	30.3	47.2	70.0	1.5	9.0	2.7	6.4	1350	27.1	2.19	3.6	19.6	88.6	25.6	2.6
40	3.1	0.1	0.2	1150	41.6	30.3	1.38	30.2	46.3	70.0	1.5	4.5	0.5	1.1	1150	28.9	2.30	3.7	21.1	93.3	30.6	2.7
	3.1	0.1	0.2	1350	42.4	32.4	1.40	30.3	47.2	70.0	1.5	4.5	0.5	1.1	1350	29.3	2.20	3.9	21.8	90.1	30.3	2.7
	3.1	0.1	0.2	1150	41.6	30.3	1.38	30.2	46.3	70.0	1.5	6.8	1.3	3.0	1150	30.4	2.30	3.9	22.5	94.4	33.3	2.8
	3.1	0.1	0.2	1350	42.4	32.4	1.40	30.3	47.2	70.0	1.5	6.8	1.3	3.0	1350	30.8	2.21	4.1	23.3	91.1	33.1	2.7
	3.1	0.1	0.2	1150	41.6	30.3	1.38	30.2	46.3	70.0	1.5	9.0	2.4	5.6	1150	31.2	2.30	4.0	23.3	95.1	34.8	2.8
	3.1	0.1	0.2	1350	42.4	32.4	1.40	30.3	47.2	70.0	1.5	9.0	2.4	5.6	1350	31.6	2.21	4.2	24.1	91.7	34.7	2.7
50	4.5	0.4	0.9	1150	41.4	30.2	1.40	29.7	46.2	70.5	1.5	4.5	0.4	0.9	1150	33.2	2.31	4.2	25.3	96.7	38.8	2.9
	4.5	0.4	0.9	1350	42.2	32.4	1.42	29.7	47.1	70.9	1.5	4.5	0.4	0.9	1350	33.6	2.21	4.5	26.1	93.1	38.4	2.8
	4.7	0.4	1.0	1150	41.6	30.3	1.38	30.2	46.3	70.0	1.5	6.8	1.2	2.7	1150	35.0	2.31	4.4	27.1	98.2	42.0	2.9
	4.7	0.4	1.0	1350	42.4	32.4	1.40	30.3	47.2	70.0	1.5	6.8	1.2	2.7	1350	35.5	2.22	4.7	27.9	94.3	41.7	2.9
	4.7	0.4	1.0	1150	41.6	30.3	1.38	30.2	46.3	70.0	1.5	9.0	2.2	5.1	1150	36.0	2.32	4.6	28.1	99.0	43.8	3.0
	4.7	0.4	1.0	1350	42.4	32.4	1.40	30.3	47.2	70.0	1.5	9.0	2.2	5.1	1350	36.5	2.22	4.8	28.9	95.0	43.6	2.9
60	4.5	0.4	0.8	1150	39.5	29.6	1.61	24.6	44.9	80.0	2.0	4.5	0.4	0.8	1150	37.6	2.32	4.7	29.7	100.3	46.8	3.0
	4.5	0.4	0.8	1350	40.3	31.7	1.64	24.6	45.9	80.4	2.1	4.5	0.4	0.8	1350	38.1	2.22	5.0	30.5	96.1	46.4	3.0
	6.8	1.1	2.5	1150	40.8	30.0	1.46	28.0	45.8	73.6	1.6	6.8	1.1	2.5	1150	39.8	2.33	5.0	31.8	102.0	50.6	3.1
	6.8	1.1	2.5	1350	41.7	32.2	1.48	28.1	46.7	73.8	1.7	6.8	1.1	2.5	1350	40.3	2.23	5.3	32.7	97.7	50.3	3.0
	9.0	2.0	4.7	1150	41.5	30.2	1.39	29.9	46.2	70.3	1.5	9.0	2.0	4.7	1150	41.0	2.33	5.2	33.0	103.0	52.7	3.2
	9.0	2.0	4.7	1350	42.3	32.4	1.41	30.0	47.2	70.5	1.5	9.0	2.0	4.7	1350	41.6	2.23	5.5	33.9	98.5	52.5	3.1
70	4.5	0.4	0.9	1150	37.3	28.9	1.85	20.2	43.7	89.4	2.7	4.5	0.4	0.9	1150	42.1	2.33	5.3	34.1	103.9	54.8	3.2
	4.5	0.4	0.9	1350	38.1	31.0	1.89	20.2	44.5	89.8	2.8	4.5	0.4	0.9	1350	42.7	2.24	5.6	35.1	99.3	54.4	3.1
	6.8	1.0	2.4	1150	38.8	29.4	1.68	23.1	44.5	83.2	2.2	6.8	1.0	2.4	1150	44.6	2.35	5.6	36.6	105.9	59.2	3.4
	6.8	1.0	2.4	1350	39.6	31.5	1.71	23.1	45.4	83.5	2.3	6.8	1.0	2.4	1350	45.2	2.25	5.9	37.6	101.0	58.9	3.3
	9.0	2.0	4.5	1150	39.5	29.6	1.60	24.7	45.0	80.0	2.0	9.0	2.0	4.5	1150	46.0	2.35	5.7	37.9	107.0	61.6	3.4
	9.0	2.0	4.5	1350	40.3	31.7	1.63	24.7	45.9	80.2	2.1	9.0	2.0	4.5	1350	46.6	2.26	6.1	38.9	102.0	61.4	3.3
80	4.5	0.4	0.9	1150	35.1	28.0	2.13	16.4	42.4	98.8	3.7	4.5	0.4	0.9	1150	46.6	2.36	5.8	38.5	107.5	62.9	3.5
	4.5	0.4	0.9	1350	35.8	30.0	2.17	16.5	43.2	99.2	3.7	4.5	0.4	0.9	1350	47.2	2.26	6.1	39.5	102.4	62.4	3.4
	6.8	1.0	2.4	1150	36.6	28.6	1.95	18.8	43.2	92.8	3.0	5.5	0.6	1.5	1150	48.0	2.37	5.9	39.9	108.6	65.0	3.6
	6.8	1.0	2.4	1350	37.3	30.7	1.98	18.8	44.1	93.1	3.1	5.5	0.6	1.5	1350	48.6	2.27	6.3	40.9	103.4	65.0	3.5
	9.0	1.9	4.4	1150	37.3	28.9	1.85	20.1	43.7	89.7	2.8	5.5	0.6	1.5	1150	48.0	2.37	5.9	39.9	108.6	65.0	3.6
	9.0	1.9	4.4	1350	38.1	31.0	1.89	20.2	44.5	89.9	2.8	5.5	0.6	1.5	1350	48.6	2.27	6.3	40.9	103.4	65.0	3.5
90	4.5	0.4	1.0	1150	32.8	27.0	2.45	13.4	41.2	108.3	4.8	3.3	0.2	0.5	1150	48.0	2.37	5.9	39.9	108.6	65.0	3.6
	4.5	0.4	1.0	1350	35.0	29.6	2.29	15.3	42.8	108.7	4.1	3.3	0.2	0.5	1350	48.6	2.27	6.3	40.9	103.4	65.0	3.5
	6.8	1.0	2.4	1150	34.3	27.7	2.25	15.2	41.9	102.4	4.1	3.3	0.2	0.5	1150	48.0	2.37	5.9	39.9	108.6	65.0	3.6
	6.8	1.0	2.4	1350	35.0	29.6	2.29	15.3	42.8	102.7	4.1	3.3	0.2	0.5	1350	48.6	2.27	6.3	40.9	103.4	65.0	3.5
	9.0	1.9	4.4	1150	35.0	28.0	2.15	16.3	42.3	99.4	3.7	3.3	0.2	0.5	1150	48.0	2.37	5.9	39.9	108.6	65.0	3.6
	9.0	1.9	4.4	1350	35.7	30.0	2.19	16.3	43.2	99.6	3.8	3.3	0.2	0.5	1350	48.6	2.27	6.3	40.9	103.4	65.0	3.5
100	4.5	0.4	1.0	1150	30.5	25.8	2.81	10.9	40.1	117.8	6.1	2.3	0.2	0.4	1150	48.0	2.37	5.9	39.9	108.6	65.0	3.6
	4.5	0.4	1.0	1350	31.1	27.6	2.86	10.9	40.9	118.2	6.2	2.3	0.2	0.4	1350	48.6	2.27	6.3	40.9	103.4	65.0	3.5
	6.8	1.0	2.4	1150	31.9	26.5	2.59	12.3	40.7	112.1	5.3	2.3	0.2	0.4	1150	48.0	2.37	5.9	39.9	108.6	65.0	3.6
	6.8	1.0	2.4	1350	32.5	28.4	2.63	12.4	41.5	112.3	5.4	2.3	0.2	0.4	1350	48.6	2.27	6.3	40.9	103.4	65.0	3.5
	9.0	1.9	4.3	1150	32.6	26.9	2.48	13.2	41.1	109.1	4.9	2.3	0.2	0.4	1150	48.0	2.37	5.9	39.9	108.6	65.0	3.6
	9.0	1.9	4.3	1350	33.3	28.8	2.52	13.2	41.9	109.3	5.0	2.3	0.2	0.4	1350	48.6	2.27	6.3	40.9	103.4	65.0	3.5
110	4.5	0.4	0.9	1150	28.2	24.4	3.20	8.8	39.2	127.4	7.6	1.8	0.1	0.2	1150	48.0	2.37	5.9	39.9	108.6	65.0	3.6
	4.5	0.4	0.9	1350	28.8	26.1	3.26	8.8	39.9	127.7	7.8	1.8	0.1	0.2	1350	48.6	2.27	6.3	40.9	103.4	65.0	3.5
	6.8	1.0	2.3	1150	29.6	25.2	2.96	10.0	39.7	121.8	6.7	1.8	0.1	0.2	1150	48.0	2.37	5.9	39.9	108.6	65.0	3.6
	6.8	1.0	2.3	1350	30.2	27.0	3.02	10.0	40.5	122.0	6.8	1.8	0.1	0.2	1350	48.6	2.27	6.3	40.9	103.4	65.0	3.5
	9.0	1.8	4.3	1150	30.3	25.6	2.84	10.6	40.0	118.9	6.2	1.8	0.1	0.2	1150	48.0	2.37	5.9	39.9	108.6	65.0	3.6
	9.0	1.8	4.3	1350	30.9	27.5	2.90	10.7	40.8	119.1	6.3	1.8	0.1	0.2	1350	48.6	2.27	6.3	40.9	103.4	65.0	3.5
120	4.5	0.3	0.7	1150	26.1	22.9	3.64	7.2	38.5	137.1	9.4	1.5	0.1	0.2	1150	48.0	2.37	5.9	39.9	108.6	65.0	3.6
	4.5	0.3	0.7	1350	26.6	24.6	3.71	7.2	39.3	137.5	9.6	1.5	0.1	0.2	1350	48.6	2.27	6.3	40.9	103.4	65.0	3.5
	6.8	0.9	2.1	1150	27.3	23.8	3.38	8.1	38.9	131.5	8.3	1.5	0.1	0.2	1150	48.0	2.37	5.9	39.9	108.6	65.0	3.6
	6.8	0.9	2.1	1350	27.9	25.5	3.44	8.1	39.6	131.7	8.5	1.5	0.1	0.2	1350	48.6	2.27	6.3	40.9	103.4	65.0	3.5
	9.0	1.8	4.1	1150	28.0	24.2	3.25	8.6	39.1	128.7	7.8	1.5	0.1	0.2	1150	48.0	2.37	5.9	39.9	108.6	65.0	3.6
	9.0	1.8	4.1	1350	28.5	26.0	3.31	8.6	39.8	128.9	8.0	1.5	0.1	0.2	1350	48.6	2.27	6.3	40.9	103.4	65.0	3.5

Interpolation is permissible; extrapolation is not.
Flow is controlled to maintain minimum LWT 70° F in cooling and maximum LWT 65° F in heating.
Table does not reflect fan or pump power corrections for AHRI/ISO conditions.
For operation in the shaded areas, please see the Performance Data Selection Notes.

All performance is based upon the lower voltage of dual voltage rated units.
Operation at or below 40° F EWT is based on 15% methanol antifreeze solution.
See Performance correction tables for operating conditions other than those listed above.

Performance Data — GT-PC Model 049 - Full Load

Performance capacities shown in thousands of Btuh

Antifreeze use recommended in this range. Also Clip JW3 on DXM2 board.

EWT °F	Cooling - EAT 80/67°F											Heating - EAT 70°F										
	GPM	WPD		CFM	TC	SC	kW	EER	HR	LWT	HWC	GPM	WPD		CFM	HC	kW	COP	HE	LAT	LWT	HWC
		PSI	FT										PSI	FT								
20	2.6	0.2	0.5	1330	56.4	37.6	2.22	25.5	64.0	70.0	2.3	12.0	5.2	12.1	1430	33.0	2.94	3.3	23.0	91.4	16.2	3.4
	2.6	0.2	0.5	1550	57.4	40.4	2.30	25.0	65.3	70.0	2.3	12.0	5.2	12.1	1650	33.5	2.85	3.4	23.8	88.8	16.0	3.3
30	3.3	0.2	0.5	1330	56.4	37.6	2.22	25.5	64.0	70.0	2.3	6.0	1.2	2.8	1430	35.6	3.03	3.4	25.2	93.0	21.6	3.6
	3.3	0.2	0.5	1550	57.4	40.4	2.30	25.0	65.3	70.0	2.3	6.0	1.2	2.8	1650	36.1	2.94	3.6	26.1	90.3	21.3	3.5
	3.3	0.2	0.5	1330	56.4	37.6	2.22	25.5	64.0	70.0	2.3	9.0	2.7	6.4	1430	36.9	3.07	3.5	26.5	93.9	24.1	3.6
	3.3	0.2	0.5	1550	57.4	40.4	2.30	25.0	65.3	70.0	2.3	9.0	2.7	6.4	1650	37.5	2.98	3.7	27.3	91.0	23.9	3.5
	3.3	0.2	0.5	1330	56.4	37.6	2.22	25.5	64.0	70.0	2.3	12.0	4.7	10.8	1430	37.7	3.10	3.6	27.1	94.4	25.5	3.7
	3.3	0.2	0.5	1550	57.4	40.4	2.30	25.0	65.3	70.0	2.3	12.0	4.7	10.8	1650	38.3	3.00	3.7	28.1	91.5	25.3	3.6
40	4.4	0.4	1.0	1330	56.4	37.6	2.22	25.5	64.0	70.0	2.3	6.0	1.0	2.3	1430	40.3	3.17	3.7	29.5	96.1	30.2	3.8
	4.4	0.4	1.0	1550	57.4	40.4	2.30	25.0	65.3	70.0	2.3	6.0	1.0	2.3	1650	40.9	3.07	3.9	30.4	93.0	29.9	3.7
	4.4	0.4	1.0	1330	56.4	37.6	2.22	25.5	64.0	70.0	2.3	9.0	2.4	5.6	1430	42.1	3.21	3.8	31.2	97.3	33.1	3.9
	4.4	0.4	1.0	1550	57.4	40.4	2.30	25.0	65.3	70.0	2.3	9.0	2.4	5.6	1650	42.8	3.11	4.0	32.1	94.0	32.9	3.8
	4.4	0.4	1.0	1330	56.4	37.6	2.22	25.5	64.0	70.0	2.3	12.0	4.2	9.7	1430	43.1	3.24	3.9	32.1	97.9	34.7	4.0
	4.4	0.4	1.0	1550	57.4	40.4	2.30	25.0	65.3	70.0	2.3	12.0	4.2	9.7	1650	43.8	3.14	4.1	33.1	94.6	34.5	3.9
50	6.0	0.9	2.0	1330	56.1	37.4	2.25	24.9	63.8	71.3	2.3	6.0	0.9	2.0	1430	45.5	3.30	4.0	34.3	99.5	38.6	4.1
	6.0	0.9	2.0	1550	57.1	40.2	2.33	24.4	65.0	71.7	2.4	6.0	0.9	2.0	1650	46.2	3.20	4.2	35.3	95.9	38.2	4.0
	6.5	1.1	2.5	1330	56.4	37.6	2.22	25.5	64.0	70.0	2.3	9.0	2.2	5.1	1430	47.8	3.35	4.2	36.4	101.0	41.9	4.3
	6.5	1.1	2.5	1550	57.4	40.4	2.30	25.0	65.3	70.0	2.3	9.0	2.2	5.1	1650	48.5	3.25	4.4	37.5	97.2	41.7	4.1
	6.5	1.1	2.5	1330	56.4	37.6	2.22	25.5	64.0	70.0	2.3	12.0	3.9	9.0	1430	49.1	3.38	4.3	37.5	101.8	43.7	4.3
	6.5	1.1	2.5	1550	57.4	40.4	2.30	25.0	65.3	70.0	2.3	12.0	3.9	9.0	1650	49.8	3.28	4.5	38.7	98.0	43.6	4.2
60	6.0	0.8	1.9	1330	53.7	36.5	2.48	21.7	62.2	80.7	2.9	6.0	0.8	1.9	1430	51.1	3.43	4.4	39.4	103.1	46.9	4.5
	6.0	0.8	1.9	1550	54.7	39.2	2.57	21.3	63.4	81.1	2.9	6.0	0.8	1.9	1650	51.9	3.33	4.6	40.5	99.1	46.5	4.3
	9.0	2.0	4.7	1330	55.5	37.1	2.31	24.0	63.4	74.1	2.5	9.0	2.0	4.7	1430	53.8	3.50	4.5	41.9	104.9	50.7	4.7
	9.0	2.0	4.7	1550	56.4	39.9	2.40	23.6	64.6	74.4	2.5	9.0	2.0	4.7	1650	54.7	3.39	4.7	43.1	100.7	50.4	4.5
	12.0	3.6	8.4	1330	56.3	37.5	2.24	25.2	63.9	70.6	2.3	12.0	3.6	8.4	1430	55.4	3.54	4.6	43.3	105.9	52.8	4.8
	12.0	3.6	8.4	1550	57.2	40.3	2.32	24.7	65.1	70.9	2.3	12.0	3.6	8.4	1650	56.2	3.43	4.8	44.5	101.5	52.6	4.6
70	6.0	0.8	1.8	1330	51.0	35.6	2.73	18.7	60.3	90.1	3.6	6.0	0.8	1.8	1430	56.9	3.57	4.7	44.7	106.8	55.1	4.9
	6.0	0.8	1.8	1550	51.8	38.2	2.83	18.3	61.5	90.5	3.7	6.0	0.8	1.8	1650	57.7	3.46	4.9	45.9	102.4	54.7	4.7
	9.0	2.0	4.5	1330	52.9	36.2	2.55	20.8	61.6	83.7	3.1	9.0	2.0	4.5	1430	60.0	3.66	4.8	47.6	108.9	59.4	5.1
	9.0	2.0	4.5	1550	53.9	38.9	2.64	20.4	62.9	84.0	3.1	9.0	2.0	4.5	1650	61.0	3.54	5.0	48.9	104.2	59.1	5.0
	12.0	3.5	8.1	1330	53.9	36.5	2.46	21.9	62.3	80.4	2.8	12.0	3.5	8.1	1430	61.8	3.71	4.9	49.1	110.0	61.8	5.2
	12.0	3.5	8.1	1550	54.8	39.3	2.55	21.5	63.5	80.6	2.9	12.0	3.5	8.1	1650	62.7	3.59	5.1	50.5	105.2	61.6	5.1
80	6.0	0.8	1.8	1330	47.9	34.6	3.02	15.8	58.2	99.4	4.5	6.0	0.8	1.8	1430	62.7	3.73	4.9	50.0	110.6	63.3	5.3
	6.0	0.8	1.8	1550	48.7	37.2	3.13	15.5	59.4	99.8	4.5	6.0	0.8	1.8	1650	63.7	3.62	5.2	51.3	105.7	62.9	5.2
	9.0	1.9	4.4	1330	50.0	35.3	2.82	17.7	59.6	93.2	3.8	7.0	1.1	2.6	1430	64.2	3.78	5.0	51.3	111.6	65.0	5.6
	9.0	1.9	4.4	1550	50.8	37.9	2.92	17.4	60.8	93.5	3.9	7.0	1.1	2.6	1650	65.2	3.66	5.2	52.7	106.6	65.0	5.4
	12.0	3.4	7.8	1330	51.0	35.6	2.72	18.7	60.3	90.1	3.6	7.0	1.1	2.6	1430	64.2	3.78	5.0	51.3	111.6	65.0	5.6
	12.0	3.4	7.8	1550	51.9	38.3	2.82	18.4	61.5	90.3	3.6	7.0	1.1	2.6	1650	65.2	3.66	5.2	52.7	106.6	65.0	5.4
90	6.0	0.8	1.9	1330	44.7	33.4	3.36	13.3	56.2	108.7	5.5	4.2	0.4	0.9	1430	64.2	3.78	5.0	51.3	111.6	65.0	5.6
	6.0	0.8	1.9	1550	47.6	36.8	3.25	14.6	58.7	109.1	4.9	4.2	0.4	0.9	1650	65.2	3.66	5.2	52.7	106.6	65.0	5.4
	9.0	1.9	4.4	1330	46.8	34.2	3.14	14.9	57.5	102.8	4.8	4.2	0.4	0.9	1430	64.2	3.78	5.0	51.3	111.6	65.0	5.6
	9.0	1.9	4.4	1550	47.6	36.8	3.25	14.6	58.7	103.0	4.9	4.2	0.4	0.9	1650	65.2	3.66	5.2	52.7	106.6	65.0	5.4
	12.0	3.3	7.7	1330	47.9	34.6	3.03	15.8	58.2	99.7	4.5	4.2	0.4	0.9	1430	64.2	3.78	5.0	51.3	111.6	65.0	5.6
	12.0	3.3	7.7	1550	48.7	37.2	3.14	15.5	59.4	99.9	4.6	4.2	0.4	0.9	1650	65.2	3.66	5.2	52.7	106.6	65.0	5.4
100	6.0	0.8	1.9	1330	41.6	32.2	3.75	11.1	54.4	118.1	6.7	3.0	0.2	0.5	1430	64.2	3.78	5.0	51.3	111.6	65.0	5.6
	6.0	0.8	1.9	1550	42.4	34.6	3.88	10.9	55.6	118.5	6.9	3.0	0.2	0.5	1650	65.2	3.66	5.2	52.7	106.6	65.0	5.4
	9.0	1.9	4.3	1330	43.6	33.0	3.50	12.5	55.5	112.3	5.9	3.0	0.2	0.5	1430	64.2	3.78	5.0	51.3	111.6	65.0	5.6
	9.0	1.9	4.3	1550	44.3	35.5	3.62	12.2	56.7	112.6	6.1	3.0	0.2	0.5	1650	65.2	3.66	5.2	52.7	106.6	65.0	5.4
	12.0	3.3	7.6	1330	44.6	33.4	3.38	13.2	56.1	109.4	5.6	3.0	0.2	0.5	1430	64.2	3.78	5.0	51.3	111.6	65.0	5.6
	12.0	3.3	7.6	1550	45.4	35.9	3.50	13.0	57.3	109.6	5.7	3.0	0.2	0.5	1650	65.2	3.66	5.2	52.7	106.6	65.0	5.4
110	6.0	0.8	1.8	1330	38.8	30.9	4.19	9.2	53.1	127.7	8.2	2.3	0.1	0.3	1430	64.2	3.78	5.0	51.3	111.6	65.0	5.6
	6.0	0.8	1.8	1550	39.5	33.2	4.35	9.1	54.3	128.1	8.4	2.3	0.1	0.3	1650	65.2	3.66	5.2	52.7	106.6	65.0	5.4
	9.0	1.8	4.3	1330	40.5	31.7	3.91	10.3	53.8	122.0	7.3	2.3	0.1	0.3	1430	64.2	3.78	5.0	51.3	111.6	65.0	5.6
	9.0	1.8	4.3	1550	41.2	34.1	4.06	10.2	55.0	122.2	7.4	2.3	0.1	0.3	1650	65.2	3.66	5.2	52.7	106.6	65.0	5.4
	12.0	3.3	7.5	1330	41.4	32.1	3.78	11.0	54.3	119.1	6.8	2.3	0.1	0.3	1430	64.2	3.78	5.0	51.3	111.6	65.0	5.6
	12.0	3.3	7.5	1550	42.1	34.5	3.92	10.8	55.5	119.2	7.0	2.3	0.1	0.3	1650	65.2	3.66	5.2	52.7	106.6	65.0	5.4
120	6.0	0.7	1.6	1330	36.4	29.6	4.71	7.7	52.5	137.5	9.9	1.9	0.1	0.3	1430	64.2	3.78	5.0	51.3	111.6	65.0	5.6
	6.0	0.7	1.6	1550	37.0	31.8	4.88	7.6	53.7	137.9	10.1	1.9	0.1	0.3	1650	65.2	3.66	5.2	52.7	106.6	65.0	5.4
	9.0	1.8	4.1	1330	37.8	30.4	4.39	8.6	52.7	131.7	8.8	1.9	0.1	0.3	1430	64.2	3.78	5.0	51.3	111.6	65.0	5.6
	9.0	1.8	4.1	1550	38.4	32.6	4.55	8.4	53.9	132.0	9.0	1.9	0.1	0.3	1650	65.2	3.66	5.2	52.7	106.6	65.0	5.4
	12.0	3.2	7.4	1330	38.5	30.8	4.24	9.1	53.0	128.8	8.3	1.9	0.1	0.3	1430	64.2	3.78	5.0	51.3	111.6	65.0	5.6
	12.0	3.2	7.4	1550	39.2	33.1	4.39	8.9	54.2	129.0	8.5	1.9	0.1	0.3	1650	65.2	3.66	5.2	52.7	106.6	65.0	5.4

Interpolation is permissible; extrapolation is not.
Flow is controlled to maintain minimum LWT 70° F in cooling and maximum LWT 65° F in heating.
Table does not reflect fan or pump power corrections for AHRI/ISO conditions.
For operation in the shaded areas, please see the Performance Data Selection Notes.

All performance is based upon the lower voltage of dual voltage rated units.
Operation at or below 40° F EWT is based on 15% methanol antifreeze solution.
See Performance correction tables for operating conditions other than those listed above.

Performance Data — GT-PC Model 064 - Part Load

Performance capacities shown in thousands of Btuh

Antifreeze use recommended in this range. Also Clip JW3 on DXM2 board.

EWT °F	Cooling - EAT 80/67°F											Heating - EAT 70°F										
	GPM	WPD		CFM	TC	SC	kW	EER	HR	LWT	HWC	GPM	WPD		CFM	HC	kW	COP	HE	LAT	LWT	HWC
		PSI	FT										PSI	FT								
20	2.4	0.1	0.1	1280	53.7	37.2	1.80	29.8	59.9	70.0	1.8	12.0	5.2	11.9	1430	28.2	2.87	2.9	18.5	88.3	16.9	3.2
	2.4	0.1	0.1	1500	54.8	39.9	1.84	29.9	61.1	70.0	1.8	12.0	5.2	11.9	1650	28.6	2.75	3.1	19.3	86.1	16.8	3.1
30	3.1	0.1	0.1	1280	53.7	37.2	1.80	29.8	59.9	70.0	1.8	6.0	0.9	2.1	1430	31.7	2.88	3.2	21.9	90.5	22.7	3.3
	3.1	0.1	0.2	1500	54.8	39.9	1.84	29.9	61.1	70.0	1.8	6.0	0.9	2.1	1650	32.2	2.76	3.4	22.7	88.0	22.4	3.2
	3.1	0.1	0.2	1280	53.7	37.2	1.80	29.8	59.9	70.0	1.8	9.0	2.5	5.7	1430	33.1	2.89	3.4	23.3	91.4	24.8	3.3
	3.1	0.1	0.2	1500	54.8	39.9	1.84	29.9	61.1	70.0	1.8	9.0	2.5	5.7	1650	33.6	2.77	3.6	24.1	88.8	24.6	3.2
	3.1	0.1	0.2	1280	53.7	37.2	1.80	29.8	59.9	70.0	1.8	12.0	4.1	9.6	1430	33.9	2.89	3.4	24.0	91.9	26.0	3.3
	3.1	0.1	0.2	1500	54.8	39.9	1.84	29.9	61.1	70.0	1.8	12.0	4.1	9.6	1650	34.4	2.77	3.6	24.9	89.3	25.8	3.2
40	4.1	0.1	0.2	1280	53.7	37.2	1.80	29.8	59.9	70.0	1.8	6.0	0.5	1.1	1430	37.0	2.91	3.7	27.1	94.0	31.0	3.4
	4.1	0.1	0.2	1500	54.8	39.9	1.84	29.9	61.1	70.0	1.8	6.0	0.5	1.1	1650	37.6	2.79	3.9	28.0	91.1	30.7	3.3
	4.1	0.1	0.2	1280	53.7	37.2	1.80	29.8	59.9	70.0	1.8	9.0	1.9	4.3	1430	38.8	2.92	3.9	28.9	95.1	33.6	3.5
	4.1	0.1	0.2	1500	54.8	39.9	1.84	29.9	61.1	70.0	1.8	9.0	1.9	4.3	1650	39.4	2.80	4.1	29.8	92.1	33.4	3.4
	4.1	0.1	0.2	1280	53.7	37.2	1.80	29.8	59.9	70.0	1.8	12.0	3.4	7.9	1430	39.8	2.93	4.0	29.8	95.8	35.0	3.5
	4.1	0.1	0.2	1500	54.8	39.9	1.84	29.9	61.1	70.0	1.8	12.0	3.4	7.9	1650	40.4	2.81	4.2	30.8	92.7	34.9	3.4
50	6.0	0.2	0.6	1280	53.7	37.2	1.81	29.6	59.8	69.9	1.8	6.0	0.2	0.6	1430	42.5	2.95	4.2	32.5	97.5	39.2	3.6
	6.0	0.2	0.6	1500	54.8	39.8	1.85	29.7	61.1	70.4	1.8	6.0	0.2	0.6	1650	43.1	2.82	4.5	33.5	94.2	38.8	3.5
	6.1	0.3	0.7	1280	53.7	37.2	1.80	29.8	59.9	70.0	1.8	9.0	1.5	3.5	1430	44.7	2.96	4.4	34.6	98.9	42.3	3.6
	6.1	0.3	0.7	1500	54.8	39.9	1.84	29.9	61.1	70.0	1.8	9.0	1.5	3.5	1650	45.3	2.84	4.7	35.7	95.4	42.1	3.5
	6.1	0.3	0.7	1280	53.7	37.2	1.80	29.8	59.9	70.0	1.8	12.0	3.0	6.9	1430	45.9	2.97	4.5	35.8	99.7	44.0	3.7
	6.1	0.3	0.7	1500	54.8	39.9	1.84	29.9	61.1	70.0	1.8	12.0	3.0	6.9	1650	46.6	2.85	4.8	36.9	96.1	43.9	3.6
60	6.0	0.2	0.4	1280	51.4	36.3	2.07	24.8	58.4	79.5	2.4	6.0	0.2	0.4	1430	48.1	2.99	4.7	37.9	101.1	47.4	3.8
	6.0	0.2	0.4	1500	52.4	38.9	2.11	24.8	59.6	79.9	2.5	6.0	0.2	0.4	1650	48.8	2.86	5.0	39.0	97.4	47.0	3.7
	9.0	1.4	3.1	1280	53.0	36.9	1.89	28.0	59.4	73.2	2.0	9.0	1.4	3.1	1430	50.6	3.01	4.9	40.4	102.8	51.0	3.9
	9.0	1.4	3.1	1500	54.1	39.5	1.93	28.1	60.6	73.5	2.0	9.0	1.4	3.1	1650	51.4	2.89	5.2	41.5	98.8	50.8	3.8
	12.0	2.7	6.3	1280	53.7	37.2	1.81	29.7	59.9	70.0	1.8	12.0	2.7	6.3	1430	52.1	3.02	5.0	41.7	103.7	53.0	4.0
	12.0	2.7	6.3	1500	54.8	39.9	1.84	29.8	61.1	70.2	1.8	12.0	2.7	6.3	1650	52.8	2.90	5.3	42.9	99.6	52.8	3.8
70	6.0	0.2	0.4	1280	48.6	35.4	2.38	20.4	56.7	88.9	3.3	6.0	0.2	0.4	1430	53.6	3.04	5.2	43.3	104.7	55.6	4.0
	6.0	0.2	0.4	1500	49.6	37.9	2.42	20.4	57.8	89.3	3.3	6.0	0.2	0.4	1650	54.4	2.91	5.5	44.5	100.5	55.2	3.9
	9.0	1.3	3.0	1280	50.4	36.0	2.17	23.2	57.9	82.9	2.7	9.0	1.3	3.0	1430	56.5	3.07	5.4	46.1	106.6	59.8	4.2
	9.0	1.3	3.0	1500	51.5	38.6	2.21	23.3	59.0	83.1	2.7	9.0	1.3	3.0	1650	57.3	2.94	5.7	47.3	102.2	59.5	4.1
	12.0	2.6	6.0	1280	51.3	36.3	2.07	24.8	58.4	79.7	2.4	12.0	2.6	6.0	1430	58.1	3.08	5.5	47.6	107.6	62.1	4.3
	12.0	2.6	6.0	1500	52.4	38.9	2.11	24.8	59.6	79.9	2.5	12.0	2.6	6.0	1650	58.9	2.96	5.8	48.8	103.1	61.9	4.2
80	6.0	0.2	0.6	1280	45.5	34.3	2.73	16.7	54.9	98.3	4.3	6.0	0.2	0.6	1430	59.1	3.10	5.6	48.5	108.3	63.8	4.3
	6.0	0.2	0.6	1500	46.5	36.7	2.78	16.7	56.0	98.7	4.4	6.0	0.2	0.6	1650	59.9	2.97	5.9	49.8	103.6	63.4	4.2
	9.0	1.3	3.1	1280	47.5	35.0	2.50	19.0	56.0	92.5	3.6	6.8	0.5	1.2	1430	60.2	3.11	5.7	49.6	109.0	65.0	4.4
	9.0	1.3	3.1	1500	48.5	37.5	2.55	19.0	57.2	92.7	3.7	6.8	0.5	1.2	1650	61.0	2.98	6.0	50.8	104.2	65.0	4.3
	12.0	2.6	5.9	1280	48.5	35.3	2.39	20.3	56.6	89.4	3.3	6.8	0.5	1.2	1430	60.2	3.11	5.7	49.6	109.0	65.0	4.4
	12.0	2.6	5.9	1500	49.5	37.8	2.44	20.3	57.8	89.6	3.4	6.8	0.5	1.2	1650	61.0	2.98	6.0	50.8	104.2	65.0	4.3
90	6.0	0.3	0.7	1280	42.4	33.0	3.13	13.6	53.1	107.7	5.5	4.1	0.2	0.5	1430	60.2	3.11	5.7	49.6	109.0	65.0	4.4
	6.0	0.3	0.7	1500	45.2	36.2	2.93	15.4	55.2	108.0	4.8	4.1	0.2	0.5	1650	61.0	2.98	6.0	50.8	104.2	65.0	4.3
	9.0	1.4	3.2	1280	44.3	33.8	2.88	15.4	54.2	102.0	4.7	4.1	0.2	0.5	1430	60.2	3.11	5.7	49.6	109.0	65.0	4.4
	9.0	1.4	3.2	1500	45.2	36.2	2.93	15.4	55.2	102.3	4.8	4.1	0.2	0.5	1650	61.0	2.98	6.0	50.8	104.2	65.0	4.3
	12.0	2.6	6.0	1280	45.3	34.2	2.76	16.4	54.7	99.1	4.4	4.1	0.2	0.5	1430	60.2	3.11	5.7	49.6	109.0	65.0	4.4
	12.0	2.6	6.0	1500	46.2	36.6	2.81	16.5	55.8	99.3	4.4	4.1	0.2	0.5	1650	61.0	2.98	6.0	50.8	104.2	65.0	4.3
100	6.0	0.3	0.8	1280	39.4	31.6	3.55	11.1	51.5	117.2	6.9	2.9	0.1	0.2	1430	60.2	3.11	5.7	49.6	109.0	65.0	4.4
	6.0	0.3	0.8	1500	40.2	33.9	3.62	11.1	52.5	117.5	7.0	2.9	0.1	0.2	1650	61.0	2.98	6.0	50.8	104.2	65.0	4.3
	9.0	1.4	3.2	1280	41.2	32.5	3.30	12.5	52.4	111.6	6.0	2.9	0.1	0.2	1430	60.2	3.11	5.7	49.6	109.0	65.0	4.4
	9.0	1.4	3.2	1500	42.0	34.7	3.36	12.5	53.4	111.9	6.1	2.9	0.1	0.2	1650	61.0	2.98	6.0	50.8	104.2	65.0	4.3
	12.0	2.6	6.0	1280	42.1	32.9	3.17	13.3	52.9	108.8	5.6	2.9	0.1	0.2	1430	60.2	3.11	5.7	49.6	109.0	65.0	4.4
	12.0	2.6	6.0	1500	43.0	35.2	3.23	13.3	54.0	109.0	5.7	2.9	0.1	0.2	1650	61.0	2.98	6.0	50.8	104.2	65.0	4.3
110	6.0	0.3	0.6	1280	36.6	30.2	4.02	9.1	50.3	126.8	8.5	2.3	0.1	0.1	1430	60.2	3.11	5.7	49.6	109.0	65.0	4.4
	6.0	0.3	0.6	1500	37.4	32.4	4.09	9.1	51.3	127.1	8.7	2.3	0.1	0.1	1650	61.0	2.98	6.0	50.8	104.2	65.0	4.3
	9.0	1.3	3.1	1280	38.2	31.0	3.75	10.2	50.9	121.3	7.5	2.3	0.1	0.1	1430	60.2	3.11	5.7	49.6	109.0	65.0	4.4
	9.0	1.3	3.1	1500	38.9	33.2	3.81	10.2	52.0	121.5	7.7	2.3	0.1	0.1	1650	61.0	2.98	6.0	50.8	104.2	65.0	4.3
	12.0	2.5	5.8	1280	39.0	31.4	3.61	10.8	51.3	118.6	7.1	2.3	0.1	0.1	1430	60.2	3.11	5.7	49.6	109.0	65.0	4.4
	12.0	2.5	5.8	1500	39.8	33.7	3.68	10.8	52.3	118.7	7.2	2.3	0.1	0.1	1650	61.0	2.98	6.0	50.8	104.2	65.0	4.3
120	6.0	0.0	0.0	1280	34.4	28.9	4.51	7.6	49.8	136.6	10.3	1.8	0.1	0.1	1430	60.2	3.11	5.7	49.6	109.0	65.0	4.4
	6.0	0.0	0.0	1500	35.1	31.0	4.59	7.6	50.8	136.9	10.5	1.8	0.1	0.1	1650	61.0	2.98	6.0	50.8	104.2	65.0	4.3
	9.0	1.1	2.6	1280	35.6	29.6	4.23	8.4	50.0	131.1	9.3	1.8	0.1	0.1	1430	60.2	3.11	5.7	49.6	109.0	65.0	4.4
	9.0	1.1	2.6	1500	36.3	31.7	4.30	8.4	51.0	131.3	9.4	1.8	0.1	0.1	1650	61.0	2.98	6.0	50.8	104.2	65.0	4.3
	12.0	2.3	5.4	1280	36.3	30.0	4.09	8.9	50.2	128.4	8.7	1.8	0.1	0.1	1430	60.2	3.11	5.7	49.6	109.0	65.0	4.4
	12.0	2.3	5.4	1500	37.0	32.2	4.16	8.9	51.2	128.5	8.9	1.8	0.1	0.1	1650	61.0	2.98	6.0	50.8	104.2	65.0	4.3

Interpolation is permissible; extrapolation is not.
Flow is controlled to maintain minimum LWT 70° F in cooling and maximum LWT 65° F in heating.
Table does not reflect fan or pump power corrections for AHRI/ISO conditions.
For operation in the shaded areas, please see the Performance Data Selection Notes.

All performance is based upon the lower voltage of dual voltage rated units.
Operation at or below 40° F EWT is based on 15% methanol antifreeze solution.
See Performance correction tables for operating conditions other than those listed above.

Performance Data — GT-PC Model 064 - Full Load

Performance capacities shown in thousands of Btuh

Antifreeze use recommended in this range. Also Clip JW3 on DXM2 board.

EWT °F	Cooling - EAT 80/67°F											Heating - EAT 70°F										
	GPM	WPD		CFM	TC	SC	kW	EER	HR	LWT	HWC	GPM	WPD		CFM	HC	kW	COP	HE	LAT	LWT	HWC
		PSI	FT										PSI	FT								
20	3.4	0.1	0.2	1590	73.0	48.1	3.02	24.2	83.3	70.0	2.7	15.0	7.3	16.8	1750	42.8	3.89	3.2	29.5	92.6	16.1	4.0
	3.4	0.1	0.2	1850	74.3	51.7	3.13	23.7	85.0	70.0	2.8	15.0	7.3	16.8	2050	43.4	3.77	3.4	30.6	89.6	15.9	3.8
30	4.2	0.1	0.2	1590	73.0	48.1	3.02	24.2	83.3	70.0	2.7	7.5	1.7	3.9	1750	46.9	3.95	3.5	33.4	94.8	21.1	4.1
	4.2	0.1	0.1	1850	74.3	51.7	3.13	23.7	85.0	70.0	2.8	7.5	1.7	3.9	2050	47.6	3.82	3.6	34.5	91.5	20.8	4.0
	4.2	0.1	0.1	1590	73.0	48.1	3.02	24.2	83.3	70.0	2.7	11.3	3.7	8.6	1750	49.1	3.98	3.6	35.6	96.0	23.7	4.2
	4.2	0.1	0.1	1850	74.3	51.7	3.13	23.7	85.0	70.0	2.8	11.3	3.7	8.6	2050	49.9	3.86	3.8	36.7	92.5	23.5	4.1
	4.2	0.1	0.1	1590	73.0	48.1	3.02	24.2	83.3	70.0	2.7	15.0	6.1	14.1	1750	50.4	4.00	3.7	36.7	96.7	25.1	4.2
	4.2	0.1	0.1	1850	74.3	51.7	3.13	23.7	85.0	70.0	2.8	15.0	6.1	14.1	2050	51.2	3.88	3.9	37.9	93.1	24.9	4.1
40	5.7	0.3	0.8	1590	73.0	48.1	3.02	24.2	83.3	70.0	2.7	7.5	1.2	2.7	1750	53.9	4.06	3.9	40.0	98.5	29.3	4.4
	5.7	0.3	0.8	1850	74.3	51.7	3.13	23.7	85.0	70.0	2.8	7.5	1.2	2.7	2050	54.7	3.94	4.1	41.3	94.7	29.0	4.2
	5.7	0.3	0.8	1590	73.0	48.1	3.02	24.2	83.3	70.0	2.7	11.3	3.0	7.0	1750	56.7	4.12	4.0	42.7	100.0	32.4	4.5
	5.7	0.3	0.8	1850	74.3	51.7	3.13	23.7	85.0	70.0	2.8	11.3	3.0	7.0	2050	57.6	3.99	4.2	44.0	96.0	32.2	4.4
	5.7	0.3	0.8	1590	73.0	48.1	3.02	24.2	83.3	70.0	2.7	15.0	5.3	12.2	1750	58.3	4.15	4.1	44.1	100.8	34.1	4.6
	5.7	0.3	0.8	1850	74.3	51.7	3.13	23.7	85.0	70.0	2.8	15.0	5.3	12.2	2050	59.2	4.02	4.3	45.5	96.7	33.9	4.4
50	7.5	0.9	2.0	1590	72.4	47.8	3.08	23.5	82.9	72.1	2.8	7.5	0.9	2.0	1750	61.1	4.21	4.3	46.8	102.4	37.5	4.7
	7.5	0.9	2.0	1850	73.6	51.4	3.20	23.0	84.5	72.5	2.9	7.5	0.9	2.0	2050	62.1	4.08	4.5	48.2	98.0	37.2	4.6
	8.5	1.3	3.0	1590	73.0	48.1	3.02	24.2	83.3	70.0	2.7	11.3	2.6	6.0	1750	64.5	4.28	4.4	49.9	104.1	41.1	4.9
	8.5	1.3	3.0	1850	74.3	51.7	3.13	23.7	85.0	70.0	2.8	11.3	2.6	6.0	2050	65.5	4.15	4.6	51.3	99.6	40.9	4.7
	8.5	1.3	3.0	1590	73.0	48.1	3.02	24.2	83.3	70.0	2.7	15.0	4.7	10.8	1750	66.3	4.32	4.5	51.6	105.1	43.1	5.0
	8.5	1.3	3.0	1850	74.3	51.7	3.13	23.7	85.0	70.0	2.8	15.0	4.7	10.8	2050	67.3	4.19	4.7	53.0	100.4	42.9	4.8
60	7.5	0.7	1.7	1590	69.5	46.7	3.35	20.7	81.0	81.6	3.5	7.5	0.7	1.7	1750	68.5	4.37	4.6	53.6	106.2	45.7	5.1
	7.5	0.7	1.7	1850	70.7	50.3	3.47	20.4	82.6	82.0	3.6	7.5	0.7	1.7	2050	69.5	4.24	4.8	55.1	101.4	45.3	5.0
	11.3	2.4	5.4	1590	71.7	47.6	3.15	22.8	82.5	74.7	3.0	11.3	2.4	5.4	1750	72.3	4.46	4.7	57.1	108.3	49.9	5.3
	11.3	2.4	5.4	1850	73.0	51.1	3.26	22.4	84.1	75.0	3.1	11.3	2.4	5.4	2050	73.4	4.33	5.0	58.6	103.2	49.6	5.2
	15.0	4.3	10.0	1590	72.7	48.0	3.05	23.8	83.1	71.1	2.8	15.0	4.3	10.0	1750	74.4	4.52	4.8	59.0	109.4	52.1	5.5
	15.0	4.3	10.0	1850	74.0	51.6	3.16	23.4	84.8	71.3	2.8	15.0	4.3	10.0	2050	75.5	4.38	5.1	60.6	104.1	51.9	5.3
70	7.5	0.7	1.7	1590	66.1	45.5	3.67	18.0	78.7	91.0	4.4	7.5	0.7	1.7	1750	75.8	4.55	4.9	60.3	110.1	53.9	5.6
	7.5	0.7	1.7	1850	67.3	48.9	3.81	17.7	80.3	91.4	4.5	7.5	0.7	1.7	2050	77.0	4.41	5.1	61.9	104.8	53.5	5.4
	11.3	2.3	5.2	1590	68.6	46.4	3.43	20.0	80.4	84.3	3.8	11.3	2.3	5.2	1750	80.1	4.67	5.0	64.2	112.4	58.6	5.8
	11.3	2.3	5.2	1850	69.8	49.9	3.56	19.6	82.0	84.6	3.8	11.3	2.3	5.2	2050	81.3	4.52	5.3	65.9	106.7	58.3	5.7
	15.0	4.1	9.5	1590	69.9	46.9	3.32	21.0	81.2	80.8	3.5	15.0	4.1	9.5	1750	82.4	4.73	5.1	66.3	113.6	61.2	6.0
	15.0	4.1	9.5	1850	71.1	50.4	3.44	20.6	82.8	81.0	3.5	15.0	4.1	9.5	2050	83.7	4.59	5.3	68.0	107.8	60.9	5.8
80	7.5	0.8	1.8	1590	62.5	44.1	4.05	15.4	76.3	100.3	5.5	7.5	0.8	1.8	1750	83.1	4.75	5.1	66.9	114.0	62.2	6.1
	7.5	0.8	1.8	1850	63.5	47.5	4.19	15.1	77.8	100.8	5.6	7.5	0.8	1.8	2050	84.4	4.61	5.4	68.7	108.1	61.7	5.9
	11.3	2.2	5.2	1590	65.1	45.1	3.78	17.2	78.0	93.9	4.7	9.5	1.5	3.6	1750	86.0	4.84	5.2	69.5	115.5	65.0	6.3
	11.3	2.2	5.2	1850	66.2	48.5	3.91	16.9	79.6	94.1	4.8	9.5	1.5	3.6	2050	87.3	4.69	5.5	71.3	109.4	65.0	6.1
	15.0	4.1	9.4	1590	66.4	45.6	3.65	18.2	78.8	90.5	4.3	9.5	1.5	3.6	1750	86.0	4.84	5.2	69.5	115.5	65.0	6.3
	15.0	4.1	9.4	1850	67.5	49.0	3.78	17.9	80.4	90.7	4.4	9.5	1.5	3.6	2050	87.3	4.69	5.5	71.3	109.4	65.0	6.1
90	7.5	0.8	2.0	1590	58.7	42.6	4.49	13.1	74.0	109.7	6.7	5.7	0.2	0.5	1750	86.0	4.84	5.2	69.5	115.5	65.0	6.3
	7.5	0.8	2.0	1850	62.3	47.0	4.33	14.4	77.1	110.2	5.9	5.7	0.2	0.5	2050	87.3	4.69	5.5	71.3	109.4	65.0	6.1
	11.3	2.3	5.2	1590	61.3	43.7	4.18	14.7	75.5	103.4	5.8	5.7	0.2	0.5	1750	86.0	4.84	5.2	69.5	115.5	65.0	6.3
	11.3	2.3	5.2	1850	62.3	47.0	4.33	14.4	77.1	103.7	5.9	5.7	0.2	0.5	2050	87.3	4.69	5.5	71.3	109.4	65.0	6.1
	15.0	4.0	9.3	1590	62.6	44.2	4.03	15.5	76.4	100.2	5.4	5.7	0.2	0.5	1750	86.0	4.84	5.2	69.5	115.5	65.0	6.3
	15.0	4.0	9.3	1850	63.7	47.5	4.18	15.2	77.9	100.4	5.5	5.7	0.2	0.5	2050	87.3	4.69	5.5	71.3	109.4	65.0	6.1
100	7.5	0.9	2.0	1590	55.2	41.1	5.00	11.0	72.3	119.3	8.1	4.1	0.1	0.2	1750	86.0	4.84	5.2	69.5	115.5	65.0	6.3
	7.5	0.9	2.0	1850	56.2	44.2	5.18	10.8	73.9	119.7	8.3	4.1	0.1	0.2	2050	87.3	4.69	5.5	71.3	109.4	65.0	6.1
	11.3	2.3	5.2	1590	57.5	42.1	4.65	12.4	73.4	113.0	7.1	4.1	0.1	0.2	1750	86.0	4.84	5.2	69.5	115.5	65.0	6.3
	11.3	2.3	5.2	1850	58.5	45.3	4.82	12.1	75.0	113.3	7.3	4.1	0.1	0.2	2050	87.3	4.69	5.5	71.3	109.4	65.0	6.1
	15.0	4.0	9.3	1590	58.8	42.6	4.48	13.1	74.1	109.9	6.7	4.1	0.1	0.2	1750	86.0	4.84	5.2	69.5	115.5	65.0	6.3
	15.0	4.0	9.3	1850	59.8	45.9	4.65	12.9	75.6	110.1	6.8	4.1	0.1	0.2	2050	87.3	4.69	5.5	71.3	109.4	65.0	6.1
110	7.5	0.8	1.8	1590	52.2	39.6	5.60	9.3	71.3	129.0	9.8	3.2	0.1	0.1	1750	86.0	4.84	5.2	69.5	115.5	65.0	6.3
	7.5	0.8	1.8	1850	53.1	42.6	5.80	9.2	72.9	129.4	10.0	3.2	0.1	0.1	2050	87.3	4.69	5.5	71.3	109.4	65.0	6.1
	11.3	2.2	5.1	1590	54.1	40.6	5.20	10.4	71.8	122.8	8.7	3.2	0.1	0.1	1750	86.0	4.84	5.2	69.5	115.5	65.0	6.3
	11.3	2.2	5.1	1850	55.0	43.6	5.39	10.2	73.4	123.1	8.8	3.2	0.1	0.1	2050	87.3	4.69	5.5	71.3	109.4	65.0	6.1
	15.0	4.0	9.2	1590	55.2	41.1	5.01	11.0	72.3	119.6	8.2	3.2	0.1	0.1	1750	86.0	4.84	5.2	69.5	115.5	65.0	6.3
	15.0	4.0	9.2	1850	56.1	44.2	5.19	10.8	73.8	119.8	8.3	3.2	0.1	0.1	2050	87.3	4.69	5.5	71.3	109.4	65.0	6.1
120	7.5	0.6	1.3	1590	50.0	38.5	6.30	7.9	71.5	139.1	11.7	2.6	0.1	0.1	1750	86.0	4.84	5.2	69.5	115.5	65.0	6.3
	7.5	0.6	1.3	1850	50.8	41.4	6.53	7.8	73.1	139.5	11.9	2.6	0.1	0.1	2050	87.3	4.69	5.5	71.3	109.4	65.0	6.1
	11.3	2.0	4.7	1590	51.3	39.2	5.83	8.8	71.2	132.7	10.4	2.6	0.1	0.1	1750	86.0	4.84	5.2	69.5	115.5	65.0	6.3
	11.3	2.0	4.7	1850	52.2	42.1	6.04	8.6	72.8	132.9	10.6	2.6	0.1	0.1	2050	87.3	4.69	5.5	71.3	109.4	65.0	6.1
	15.0	3.8	8.8	1590	52.1	39.6	5.62	9.3	71.3	129.5	9.8	2.6	0.1	0.1	1750	86.0	4.84	5.2	69.5	115.5	65.0	6.3
	15.0	3.8	8.8	1850	53.0	42.6	5.82	9.1	72.9	129.7	10.0	2.6	0.1	0.1	2050	87.3	4.69	5.5	71.3	109.4	65.0	6.1

Interpolation is permissible; extrapolation is not.
Flow is controlled to maintain minimum LWT 70° F in cooling and maximum LWT 65° F in heating.
Table does not reflect fan or pump power corrections for AHRI/ISO conditions.
For operation in the shaded areas, please see the Performance Data Selection Notes.

All performance is based upon the lower voltage of dual voltage rated units.
Operation at or below 40° F EWT is based on 15% methanol antifreeze solution.
See Performance correction tables for operating conditions other than those listed above.

Performance Data — GT-PC Model 072 - Part Load

Performance capacities shown in thousands of Btuh

Antifreeze use recommended in this range. Also Clip JW3 on DXM2 board.

EWT °F	Cooling - EAT 80/67°F											Heating - EAT 70°F										
	GPM	WPD		CFM	TC	SC	kW	EER	HR	LWT	HWC	GPM	WPD		CFM	HC	kW	COP	HE	LAT	LWT	HWC
		PSI	FT										PSI	FT								
20	2.8	0.1	0.2	1325	61.7	39.2	2.27	27.2	69.5	70.0	2.6	14.0	6.5	15.1	1430	32.9	3.66	2.6	20.5	91.3	17.1	4.3
	2.8	0.1	0.2	1550	63.0	42.0	2.31	27.2	70.9	70.0	2.7	14.0	6.5	15.1	1650	33.4	3.51	2.8	21.4	88.7	16.9	4.1
30	3.5	0.1	0.2	1325	61.7	39.2	2.27	27.2	69.5	70.0	2.6	7.0	1.4	3.3	1430	37.2	3.72	2.9	24.5	94.1	23.0	4.4
	3.5	0.1	0.2	1550	63.0	42.0	2.31	27.2	70.9	70.0	2.7	7.0	1.4	3.3	1650	37.7	3.57	3.1	25.5	91.1	22.7	4.3
	3.5	0.1	0.2	1325	61.7	39.2	2.27	27.2	69.5	70.0	2.6	10.5	3.3	7.6	1430	38.7	3.75	3.0	25.9	95.1	25.1	4.4
	3.5	0.1	0.2	1550	63.0	42.0	2.31	27.2	70.9	70.0	2.7	10.5	3.3	7.6	1650	39.3	3.59	3.2	27.0	92.0	24.9	4.3
	3.5	0.1	0.2	1325	61.7	39.2	2.27	27.2	69.5	70.0	2.6	14.0	5.4	12.5	1430	39.6	3.76	3.1	26.8	95.6	26.2	4.4
	3.5	0.1	0.2	1550	63.0	42.0	2.31	27.2	70.9	70.0	2.7	14.0	5.4	12.5	1650	40.1	3.60	3.3	27.8	92.5	26.0	4.3
40	4.7	0.2	0.5	1325	61.7	39.2	2.27	27.2	69.5	70.0	2.6	7.0	0.9	2.2	1430	43.3	3.81	3.3	30.3	98.0	31.4	4.6
	4.7	0.2	0.5	1550	63.0	42.0	2.31	27.2	70.9	70.0	2.7	7.0	0.9	2.2	1650	43.9	3.65	3.5	31.4	94.6	31.0	4.5
	4.7	0.2	0.5	1325	61.7	39.2	2.27	27.2	69.5	70.0	2.6	10.5	2.6	6.1	1430	45.2	3.84	3.5	32.1	99.3	33.9	4.7
	4.7	0.2	0.5	1550	63.0	42.0	2.31	27.2	70.9	70.0	2.7	10.5	2.6	6.1	1650	45.8	3.68	3.7	33.3	95.7	33.7	4.5
	4.7	0.2	0.5	1325	61.7	39.2	2.27	27.2	69.5	70.0	2.6	14.0	4.6	10.7	1430	46.3	3.85	3.5	33.1	100.0	35.3	4.7
	4.7	0.2	0.5	1550	63.0	42.0	2.31	27.2	70.9	70.0	2.7	14.0	4.6	10.7	1650	46.9	3.69	3.7	34.3	96.3	35.1	4.5
50	7.0	0.7	1.5	1325	61.7	39.2	2.28	27.1	69.4	69.8	2.6	7.0	0.7	1.5	1430	49.4	3.90	3.7	36.1	102.0	39.7	4.9
	7.0	0.7	1.5	1550	62.9	41.9	2.32	27.1	70.8	70.2	2.7	7.0	0.7	1.5	1650	50.1	3.74	3.9	37.4	98.1	39.3	4.8
	7.1	0.7	1.6	1325	61.7	39.2	2.27	27.2	69.5	70.0	2.6	10.5	2.2	5.1	1430	51.7	3.93	3.9	38.3	103.5	42.7	5.0
	7.1	0.7	1.6	1550	63.0	42.0	2.31	27.2	70.9	70.0	2.7	10.5	2.2	5.1	1650	52.5	3.77	4.1	39.6	99.4	42.5	4.9
	7.1	0.7	1.6	1325	61.7	39.2	2.27	27.2	69.5	70.0	2.6	14.0	4.1	9.4	1430	53.0	3.95	3.9	39.5	104.3	44.4	5.1
	7.1	0.7	1.6	1550	63.0	42.0	2.31	27.2	70.9	70.0	2.7	14.0	4.1	9.4	1650	53.8	3.78	4.2	40.8	100.2	44.2	4.9
60	7.0	0.5	1.3	1325	59.0	38.1	2.60	22.7	67.9	79.4	3.2	7.0	0.5	1.3	1430	55.6	3.98	4.1	42.0	106.0	48.0	5.3
	7.0	0.5	1.3	1550	60.2	40.8	2.65	22.7	69.3	79.8	3.2	7.0	0.5	1.3	1650	56.4	3.82	4.3	43.3	101.6	47.6	5.2
	10.5	2.0	4.6	1325	60.9	38.8	2.38	25.6	69.0	73.1	2.8	10.5	2.0	4.6	1430	58.3	4.02	4.2	44.6	107.7	51.5	5.4
	10.5	2.0	4.6	1550	62.1	41.6	2.42	25.6	70.4	73.4	2.9	10.5	2.0	4.6	1650	59.1	3.86	4.5	46.0	103.2	51.2	5.3
	14.0	3.8	8.7	1325	61.7	39.2	2.28	27.1	69.5	69.9	2.7	14.0	3.8	8.7	1430	59.8	4.04	4.3	46.0	108.7	53.4	5.5
	14.0	3.8	8.7	1550	63.0	42.0	2.32	27.2	70.9	70.1	2.7	14.0	3.8	8.7	1650	60.6	3.88	4.6	47.4	104.0	53.2	5.4
70	7.0	0.5	1.3	1325	56.0	36.9	2.98	18.8	66.1	88.9	4.2	7.0	0.5	1.3	1430	61.8	4.07	4.4	47.9	110.0	56.3	5.8
	7.0	0.5	1.3	1550	57.1	39.5	3.04	18.8	67.5	89.3	4.3	7.0	0.5	1.3	1650	62.6	3.90	4.7	49.3	105.1	55.9	5.6
	10.5	1.9	4.5	1325	58.0	37.7	2.73	21.3	67.3	82.8	3.6	10.5	1.9	4.5	1430	64.8	4.12	4.6	50.8	112.0	60.3	6.0
	10.5	1.9	4.5	1550	59.2	40.3	2.78	21.3	68.7	83.1	3.7	10.5	1.9	4.5	1650	65.8	3.95	4.9	52.3	106.9	60.0	5.8
	14.0	3.6	8.3	1325	59.0	38.1	2.61	22.6	67.9	79.7	3.4	14.0	3.6	8.3	1430	66.5	4.14	4.7	52.4	113.1	62.5	6.1
	14.0	3.6	8.3	1550	60.2	40.7	2.65	22.7	69.3	79.9	3.5	14.0	3.6	8.3	1650	67.5	3.97	5.0	53.9	107.9	62.3	5.9
80	7.0	0.6	1.4	1325	52.6	35.6	3.42	15.4	64.3	98.4	5.7	7.0	0.6	1.4	1430	68.0	4.17	4.8	53.7	114.0	64.6	6.3
	7.0	0.6	1.4	1550	53.7	38.1	3.48	15.4	65.6	98.7	5.8	7.0	0.6	1.4	1650	68.9	3.99	5.1	55.3	108.7	64.2	6.1
	10.5	1.9	4.5	1325	54.8	36.4	3.13	17.5	65.5	92.5	4.9	7.4	0.8	1.8	1430	68.5	4.17	4.8	54.3	114.4	65.0	6.3
	10.5	1.9	4.5	1550	55.9	39.0	3.19	17.5	66.8	92.7	5.0	7.4	0.8	1.8	1650	69.5	4.00	5.1	55.8	109.0	65.0	6.1
	14.0	3.5	8.1	1325	55.9	36.8	3.00	18.6	66.1	89.4	4.5	7.4	0.8	1.8	1430	68.5	4.17	4.8	54.3	114.4	65.0	6.3
	14.0	3.5	8.1	1550	57.0	39.4	3.05	18.7	67.4	89.6	4.6	7.4	0.8	1.8	1650	69.5	4.00	5.1	55.8	109.0	65.0	6.1
90	7.0	0.7	1.5	1325	49.1	34.2	3.91	12.6	62.4	107.8	7.5	4.5	0.3	0.6	1430	68.5	4.17	4.8	54.3	114.4	65.0	6.3
	7.0	0.7	1.5	1550	52.3	37.5	3.67	14.3	64.8	108.2	6.7	4.5	0.3	0.6	1650	69.5	4.00	5.1	55.8	109.0	65.0	6.1
	10.5	2.0	4.5	1325	51.3	35.0	3.60	14.2	63.6	102.1	6.5	4.5	0.3	0.6	1430	68.5	4.17	4.8	54.3	114.4	65.0	6.3
	10.5	2.0	4.5	1550	52.3	37.5	3.67	14.3	64.8	102.3	6.7	4.5	0.3	0.6	1650	69.5	4.00	5.1	55.8	109.0	65.0	6.1
	14.0	3.5	8.1	1325	52.4	35.5	3.45	15.2	64.2	99.2	6.1	4.5	0.3	0.6	1430	68.5	4.17	4.8	54.3	114.4	65.0	6.3
	14.0	3.5	8.1	1550	53.5	38.0	3.51	15.2	65.4	99.3	6.2	4.5	0.3	0.6	1650	69.5	4.00	5.1	55.8	109.0	65.0	6.1
100	7.0	0.7	1.6	1325	45.5	32.9	4.45	10.2	60.7	117.3	9.7	3.2	0.2	0.4	1430	68.5	4.17	4.8	54.3	114.4	65.0	6.3
	7.0	0.7	1.6	1550	46.4	35.2	4.54	10.2	61.9	117.7	9.9	3.2	0.2	0.4	1650	69.5	4.00	5.1	55.8	109.0	65.0	6.1
	10.5	2.0	4.5	1325	47.6	33.7	4.12	11.6	61.7	111.8	8.6	3.2	0.2	0.4	1430	68.5	4.17	4.8	54.3	114.4	65.0	6.3
	10.5	2.0	4.5	1550	48.6	36.0	4.20	11.6	62.9	112.0	8.8	3.2	0.2	0.4	1650	69.5	4.00	5.1	55.8	109.0	65.0	6.1
	14.0	3.5	8.1	1325	48.7	34.1	3.96	12.3	62.2	108.9	8.1	3.2	0.2	0.4	1430	68.5	4.17	4.8	54.3	114.4	65.0	6.3
	14.0	3.5	8.1	1550	49.7	36.5	4.03	12.3	63.5	109.1	8.2	3.2	0.2	0.4	1650	69.5	4.00	5.1	55.8	109.0	65.0	6.1
110	7.0	0.6	1.4	1325	42.0	31.5	5.06	8.3	59.2	126.9	12.4	2.5	0.1	0.2	1430	68.5	4.17	4.8	54.3	114.4	65.0	6.3
	7.0	0.6	1.4	1550	42.9	33.8	5.15	8.3	60.4	127.3	12.6	2.5	0.1	0.2	1650	69.5	4.00	5.1	55.8	109.0	65.0	6.1
	10.5	1.9	4.4	1325	44.0	32.3	4.70	9.4	60.1	121.4	11.1	2.5	0.1	0.2	1430	68.5	4.17	4.8	54.3	114.4	65.0	6.3
	10.5	1.9	4.4	1550	44.9	34.6	4.78	9.4	61.2	121.7	11.3	2.5	0.1	0.2	1650	69.5	4.00	5.1	55.8	109.0	65.0	6.1
	14.0	3.5	8.0	1325	45.1	32.7	4.52	10.0	60.5	118.6	10.5	2.5	0.1	0.2	1430	68.5	4.17	4.8	54.3	114.4	65.0	6.3
	14.0	3.5	8.0	1550	46.0	35.0	4.61	10.0	61.7	118.8	10.7	2.5	0.1	0.2	1650	69.5	4.00	5.1	55.8	109.0	65.0	6.1
120	7.0	0.4	0.9	1325	38.7	30.3	5.72	6.8	58.2	136.6	15.4	2.0	0.1	0.1	1430	68.5	4.17	4.8	54.3	114.4	65.0	6.3
	7.0	0.4	0.9	1550	39.5	32.5	5.82	6.8	59.4	137.0	15.7	2.0	0.1	0.1	1650	69.5	4.00	5.1	55.8	109.0	65.0	6.1
	10.5	1.7	3.9	1325	40.5	31.0	5.33	7.6	58.7	131.2	14.0	2.0	0.1	0.1	1430	68.5	4.17	4.8	54.3	114.4	65.0	6.3
	10.5	1.7	3.9	1550	41.4	33.2	5.43	7.6	59.9	131.4	14.3	2.0	0.1	0.1	1650	69.5	4.00	5.1	55.8	109.0	65.0	6.1
	14.0	3.3	7.6	1325	41.5	31.3	5.14	8.1	59.1	128.4	13.3	2.0	0.1	0.1	1430	68.5	4.17	4.8	54.3	114.4	65.0	6.3
	14.0	3.3	7.6	1550	42.4	33.6	5.24	8.1	60.2	128.6	13.6	2.0	0.1	0.1	1650	69.5	4.00	5.1	55.8	109.0	65.0	6.1

Interpolation is permissible; extrapolation is not.
Flow is controlled to maintain minimum LWT 70° F in cooling and maximum LWT 65° F in heating.
Table does not reflect fan or pump power corrections for AHRI/ISO conditions.
For operation in the shaded areas, please see the Performance Data Selection Notes.

All performance is based upon the lower voltage of dual voltage rated units.
Operation at or below 40° F EWT is based on 15% methanol antifreeze solution.
See Performance correction tables for operating conditions other than those listed above.

Performance Data — GT-PC Model 072 - Full Load

Performance capacities shown in thousands of Btuh

Antifreeze use recommended in this range. Also Clip JW3 on DXM2 board.

EWT °F	Cooling - EAT 80/67°F											Heating - EAT 70°F										
	GPM	WPD		CFM	TC	SC	kW	EER	HR	LWT	HWC	GPM	WPD		CFM	HC	kW	COP	HE	LAT	LWT	HWC
		PSI	FT										PSI	FT								
20	3.7	0.3	0.6	1590	79.6	49.1	3.49	22.8	91.5	70.0	4.4	17.0	8.9	20.6	1750	46.6	4.66	2.9	30.7	94.7	16.4	5.2
	3.7	0.3	0.6	1850	81.0	52.8	3.61	22.4	93.3	70.0	4.5	17.0	8.9	20.6	2050	47.3	4.52	3.1	31.9	91.4	16.2	5.0
30	4.7	0.3	0.6	1590	79.6	49.1	3.49	22.8	91.5	70.0	4.4	8.5	2.2	5.1	1750	51.6	4.77	3.2	35.3	97.3	21.7	5.4
	4.7	0.3	0.6	1850	81.0	52.8	3.61	22.4	93.3	70.0	4.5	8.5	2.2	5.1	2050	52.4	4.63	3.3	36.6	93.7	21.4	5.2
	4.7	0.3	0.6	1590	79.6	49.1	3.49	22.8	91.5	70.0	4.4	12.8	4.6	10.6	1750	54.0	4.83	3.3	37.5	98.6	24.1	5.5
	4.7	0.3	0.6	1850	81.0	52.8	3.61	22.4	93.3	70.0	4.5	12.8	4.6	10.6	2050	54.8	4.68	3.4	38.8	94.8	23.9	5.4
	4.7	0.3	0.6	1590	79.6	49.1	3.49	22.8	91.5	70.0	4.4	17.0	7.6	17.6	1750	55.3	4.86	3.3	38.7	99.2	25.4	5.6
	4.7	0.3	0.6	1850	81.0	52.8	3.61	22.4	93.3	70.0	4.5	17.0	7.6	17.6	2050	56.1	4.71	3.5	40.1	95.3	25.3	5.5
40	6.2	0.6	1.3	1590	79.6	49.1	3.49	22.8	91.5	70.0	4.4	8.5	1.6	3.8	1750	59.4	4.96	3.5	42.4	101.4	30.0	5.9
	6.2	0.6	1.3	1850	81.0	52.8	3.61	22.4	93.3	70.0	4.5	8.5	1.6	3.8	2050	60.3	4.80	3.7	43.9	97.2	29.7	5.7
	6.2	0.6	1.3	1590	79.6	49.1	3.49	22.8	91.5	70.0	4.4	12.8	3.9	8.9	1750	62.1	5.02	3.6	45.0	102.9	32.9	6.1
	6.2	0.6	1.3	1850	81.0	52.8	3.61	22.4	93.3	70.0	4.5	12.8	3.9	8.9	2050	63.1	4.87	3.8	46.5	98.5	32.7	5.9
	6.2	0.6	1.3	1590	79.6	49.1	3.49	22.8	91.5	70.0	4.4	17.0	6.7	15.5	1750	63.6	5.06	3.7	46.4	103.7	34.5	6.2
	6.2	0.6	1.3	1850	81.0	52.8	3.61	22.4	93.3	70.0	4.5	17.0	6.7	15.5	2050	64.6	4.90	3.9	47.9	99.2	34.4	6.1
50	8.5	1.3	3.0	1590	79.1	49.0	3.54	22.3	91.2	71.5	4.5	8.5	1.3	3.0	1750	66.9	5.14	3.8	49.4	105.4	38.4	6.5
	8.5	1.3	3.0	1850	80.5	52.6	3.67	21.9	93.0	71.9	4.6	8.5	1.3	3.0	2050	67.9	4.99	4.0	50.9	100.7	38.0	6.3
	9.3	1.7	3.9	1590	79.6	49.1	3.49	22.8	91.5	70.0	4.4	12.8	3.4	7.8	1750	70.1	5.23	3.9	52.3	107.1	41.8	6.8
	9.3	1.7	3.9	1850	81.0	52.8	3.61	22.4	93.3	70.0	4.5	12.8	3.4	7.8	2050	71.2	5.07	4.1	53.9	102.1	41.5	6.6
	9.3	1.7	3.9	1590	79.6	49.1	3.49	22.8	91.5	70.0	4.4	17.0	6.0	13.9	1750	71.8	5.27	4.0	53.8	108.0	43.7	7.0
	9.3	1.7	3.9	1850	81.0	52.8	3.61	22.4	93.3	70.0	4.5	17.0	6.0	13.9	2050	72.9	5.11	4.2	55.5	102.9	43.5	6.8
60	8.5	1.2	2.7	1590	76.1	47.8	3.87	19.6	89.3	81.0	5.4	8.5	1.2	2.7	1750	74.4	5.34	4.1	56.2	109.4	46.8	7.3
	8.5	1.2	2.7	1850	77.4	51.4	4.01	19.3	91.1	81.4	5.6	8.5	1.2	2.7	2050	75.5	5.18	4.3	57.9	104.1	46.4	7.1
	12.8	3.1	7.1	1590	78.3	48.7	3.63	21.6	90.7	74.2	4.7	12.8	3.1	7.1	1750	78.0	5.44	4.2	59.4	111.3	50.7	7.7
	12.8	3.1	7.1	1850	79.7	52.3	3.76	21.2	92.5	74.5	4.8	12.8	3.1	7.1	2050	79.2	5.28	4.4	61.2	105.8	50.4	7.4
	17.0	5.6	13.0	1590	79.3	49.1	3.52	22.6	91.3	70.7	4.4	17.0	5.6	13.0	1750	80.0	5.50	4.3	61.2	112.3	52.8	7.9
	17.0	5.6	13.0	1850	80.7	52.7	3.64	22.2	93.1	71.0	4.5	17.0	5.6	13.0	2050	81.2	5.33	4.5	63.0	106.7	52.6	7.7
70	8.5	1.1	2.6	1590	72.4	46.3	4.26	17.0	87.0	90.5	6.7	8.5	1.1	2.6	1750	81.9	5.56	4.3	62.9	113.3	55.2	8.1
	8.5	1.1	2.6	1850	73.7	49.8	4.42	16.7	88.7	90.9	6.8	8.5	1.1	2.6	2050	83.2	5.38	4.5	64.8	107.6	54.8	7.9
	12.8	3.0	6.8	1590	75.0	47.4	3.98	18.9	88.6	83.9	5.8	12.8	3.0	6.8	1750	86.0	5.68	4.4	66.6	115.5	59.6	8.6
	12.8	3.0	6.8	1850	76.3	50.9	4.12	18.5	90.4	84.2	5.9	12.8	3.0	6.8	2050	87.3	5.50	4.6	68.5	109.4	59.3	8.4
	17.0	5.4	12.4	1590	76.3	47.9	3.85	19.8	89.4	80.5	5.4	17.0	5.4	12.4	1750	88.2	5.75	4.5	68.6	116.7	61.9	8.9
	17.0	5.4	12.4	1850	77.6	51.5	3.99	19.5	91.2	80.7	5.5	17.0	5.4	12.4	2050	89.5	5.57	4.7	70.5	110.4	61.7	8.7
80	8.5	1.2	2.7	1590	68.4	44.7	4.72	14.5	84.5	99.9	8.2	8.5	1.2	2.7	1750	89.5	5.79	4.5	69.8	117.4	63.6	9.1
	8.5	1.2	2.7	1850	69.5	48.1	4.89	14.2	86.2	100.3	8.4	8.5	1.2	2.7	2050	90.9	5.61	4.7	71.7	111.0	63.1	8.8
	12.8	2.9	6.7	1590	71.2	45.8	4.40	16.2	86.2	93.5	7.1	9.8	1.6	3.8	1750	91.2	5.84	4.6	71.3	118.3	65.0	9.5
	12.8	2.9	6.7	1850	72.4	49.3	4.56	15.9	88.0	93.8	7.3	9.8	1.6	3.8	2050	92.6	5.66	4.8	73.3	111.8	65.0	9.2
	17.0	5.2	12.1	1590	72.6	46.4	4.24	17.1	87.1	90.2	6.6	9.8	1.6	3.8	1750	91.2	5.84	4.6	71.3	118.3	65.0	9.5
	17.0	5.2	12.1	1850	73.8	49.9	4.40	16.8	88.8	90.5	6.7	9.8	1.6	3.8	2050	92.6	5.66	4.8	73.3	111.8	65.0	9.2
90	8.5	1.2	2.8	1590	64.1	43.0	5.26	12.2	82.0	109.3	10.0	5.9	0.3	0.6	1750	91.2	5.84	4.6	71.3	118.3	65.0	9.5
	8.5	1.2	2.8	1850	68.1	47.4	5.07	13.4	85.4	109.7	9.0	5.9	0.3	0.6	2050	92.6	5.66	4.8	73.3	111.8	65.0	9.2
	12.8	2.9	6.7	1590	67.0	44.1	4.89	13.7	83.6	103.1	8.8	5.9	0.3	0.6	1750	91.2	5.84	4.6	71.3	118.3	65.0	9.5
	12.8	2.9	6.7	1850	68.1	47.4	5.07	13.4	85.4	103.4	9.0	5.9	0.3	0.6	2050	92.6	5.66	4.8	73.3	111.8	65.0	9.2
	17.0	5.2	12.0	1590	68.4	44.7	4.71	14.5	84.5	99.9	8.2	5.9	0.3	0.6	1750	91.2	5.84	4.6	71.3	118.3	65.0	9.5
	17.0	5.2	12.0	1850	69.6	48.1	4.88	14.2	86.3	100.1	8.4	5.9	0.3	0.6	2050	92.6	5.66	4.8	73.3	111.8	65.0	9.2
100	8.5	1.2	2.8	1590	59.8	41.2	5.88	10.2	79.9	118.8	12.2	4.2	0.1	0.2	1750	91.2	5.84	4.6	71.3	118.3	65.0	9.5
	8.5	1.2	2.8	1850	60.9	44.3	6.09	10.0	81.6	119.2	12.5	4.2	0.1	0.2	2050	92.6	5.66	4.8	73.3	111.8	65.0	9.2
	12.8	2.9	6.7	1590	62.6	42.3	5.46	11.5	81.2	112.7	10.8	4.2	0.1	0.2	1750	91.2	5.84	4.6	71.3	118.3	65.0	9.5
	12.8	2.9	6.7	1850	63.7	45.5	5.66	11.2	83.0	113.0	11.0	4.2	0.1	0.2	2050	92.6	5.66	4.8	73.3	111.8	65.0	9.2
	17.0	5.2	12.0	1590	64.0	42.9	5.27	12.2	82.0	109.6	10.1	4.2	0.1	0.2	1750	91.2	5.84	4.6	71.3	118.3	65.0	9.5
	17.0	5.2	12.0	1850	65.1	46.2	5.46	11.9	83.8	109.9	10.3	4.2	0.1	0.2	2050	92.6	5.66	4.8	73.3	111.8	65.0	9.2
110	8.5	1.1	2.6	1590	55.7	39.5	6.61	8.4	78.2	128.4	14.7	3.3	0.1	0.1	1750	91.2	5.84	4.6	71.3	118.3	65.0	9.5
	8.5	1.1	2.6	1850	56.7	42.5	6.85	8.3	80.0	128.8	15.0	3.3	0.1	0.1	2050	92.6	5.66	4.8	73.3	111.8	65.0	9.2
	12.8	2.9	6.6	1590	58.3	40.6	6.13	9.5	79.2	122.4	13.1	3.3	0.1	0.1	1750	91.2	5.84	4.6	71.3	118.3	65.0	9.5
	12.8	2.9	6.6	1850	59.3	43.6	6.36	9.3	81.0	122.7	13.4	3.3	0.1	0.1	2050	92.6	5.66	4.8	73.3	111.8	65.0	9.2
	17.0	5.1	11.8	1590	59.6	41.1	5.91	10.1	79.8	119.4	12.3	3.3	0.1	0.1	1750	91.2	5.84	4.6	71.3	118.3	65.0	9.5
	17.0	5.1	11.8	1850	60.7	44.2	6.12	9.9	81.6	119.6	12.6	3.3	0.1	0.1	2050	92.6	5.66	4.8	73.3	111.8	65.0	9.2
120	8.5	0.9	2.1	1590	52.0	38.1	7.45	7.0	77.4	138.2	17.6	2.7	0.1	0.1	1750	91.2	5.84	4.6	71.3	118.3	65.0	9.5
	8.5	0.9	2.1	1850	52.9	41.0	7.72	6.8	79.2	138.6	18.0	2.7	0.1	0.1	2050	92.6	5.66	4.8	73.3	111.8	65.0	9.2
	12.8	2.7	6.2	1590	54.2	39.0	6.91	7.8	77.8	132.2	15.8	2.7	0.1	0.1	1750	91.2	5.84	4.6	71.3	118.3	65.0	9.5
	12.8	2.7	6.2	1850	55.2	41.9	7.16	7.7	79.6	132.5	16.1	2.7	0.1	0.1	2050	92.6	5.66	4.8	73.3	111.8	65.0	9.2
	17.0	5.0	11.5	1590	55.5	39.4	6.65	8.3	78.2	129.2	14.9	2.7	0.1	0.1	1750	91.2	5.84	4.6	71.3	118.3	65.0	9.5
	17.0	5.0	11.5	1850	56.4	42.4	6.90	8.2	80.0	129.4	15.2	2.7	0.1	0.1	2050	92.6	5.66	4.8	73.3	111.8	65.0	9.2

Interpolation is permissible; extrapolation is not.
Flow is controlled to maintain minimum LWT 70° F in cooling and maximum LWT 65° F in heating.
Table does not reflect fan or pump power corrections for AHRI/ISO conditions.
For operation in the shaded areas, please see the Performance Data Selection Notes.

All performance is based upon the lower voltage of dual voltage rated units.
Operation at or below 40° F EWT is based on 15% methanol antifreeze solution.
See Performance correction tables for operating conditions other than those listed above.

Physical Data

Model	026	038	049	064	072
Compressor (1 Each)	Copeland UltraTech Two-Stage Scroll				
Factory Charge HFC-410a, oz [kg]	60 [1.70]	64 [1.81]	81 [2.30]	142 [4.02]	140 [4.0]
ECM Motor & Blower					
Fan Motor, hp [W]	1/2 [373]	1/2 [373]	1 [746]	1 [746]	1 [746]
Blower Wheel Size (Dia x W), in [mm]	9 x 7 [229 x 178]	11 x 10 [279 x 254]	11 x 10 [279 x 254]	11 x 10 [279 x 254]	11 x 10 [279 x 254]
Water Connection Size					
Swivel - Residential Class	1”	1”	1”	1”	1”
HWG Water Connection Size					
Swivel - Residential Class	1”	1”	1”	1”	1”
Vertical Upflow					
Air Coil Dimensions (H x W), in [mm]	28 x 20 [711 x 542]	28 x 25 [711 x 635]	32 x 25 [813 x 635]	36 x 25 [914 x 635]	36 x 25 [914 x 635]
Standard Filter - 2” [51mm] Pleated MERV11 Throwaway, in [mm]	28 x 24 [712 x 610]	28 x 29.5 [712 x 749]	32 x 29.5 [813 x 749]	36 x 29.5 [914 x 749]	36 x 29.5 [914 x 749]
Weight - Operating, lbs [kg]	298 [135]	359 [163]	448 [203]	475 [215]	475 [215]
Weight - Packaged, lbs [kg]	308 [140]	369 [167]	458 [208]	485 [220]	485 [220]
Horizontal					
Air Coil Dimensions (H x W), in [mm]	18 x 31 [457 x 787]	20 x 35 [508 x 889]	20 x 40 [508 x 1018]	20 x 45 [508 x 1143]	20 x 45 [508 x 1143]
Standard Filter - 2” [51mm] Pleated MERV11 Throwaway, in [mm]	2 - 18 x 18 [457 x 457]	1 - 12 x 20 [305 x 508] 1 - 20 x 25 [508 x 635]	1 - 18 x 20 [457 x 508] 1 - 20 x 24 [508 x 610]	2 - 20 x 24 [508 x 610]	2 - 20 x 24 [508 x 610]
Weight - Operating, lbs [kg]	298 [135]	359 [163]	448 [203]	475 [215]	475 [215]
Weight - Packaged, lbs [kg]	308 [140]	369 [167]	458 [208]	485 [220]	485 [220]

All units have grommet compressor mountings, TXV expansion devices, and 1/2” [12.7mm] & 3/4” [19.1mm] electrical knockouts.

Dimensions - Vertical Upflow GT-PC

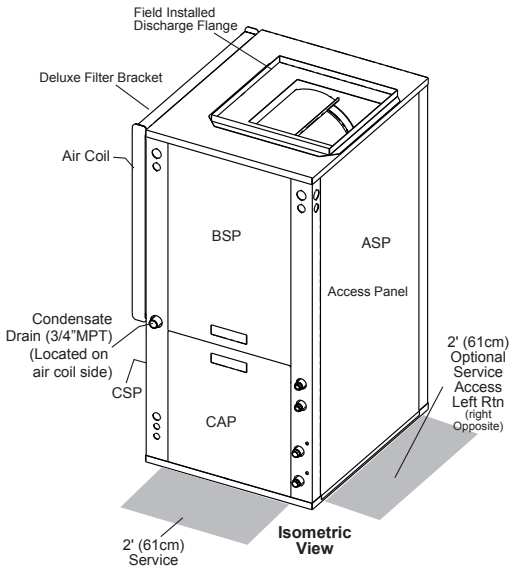

Legend
CAP=Control Access Panel
CSP=Compressor Service Panel
BSP=Blower Service Panel
ASP=Alternate Service Panel

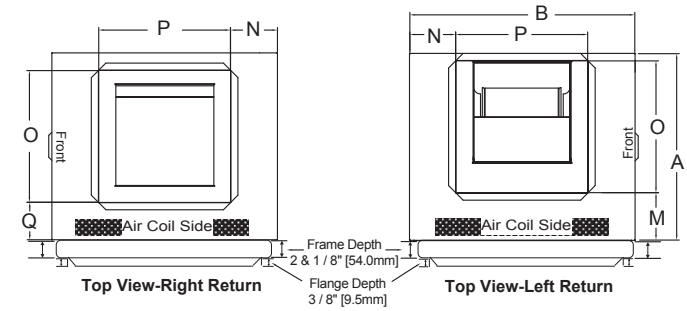

Top View-Right Return

Top View-Left Return

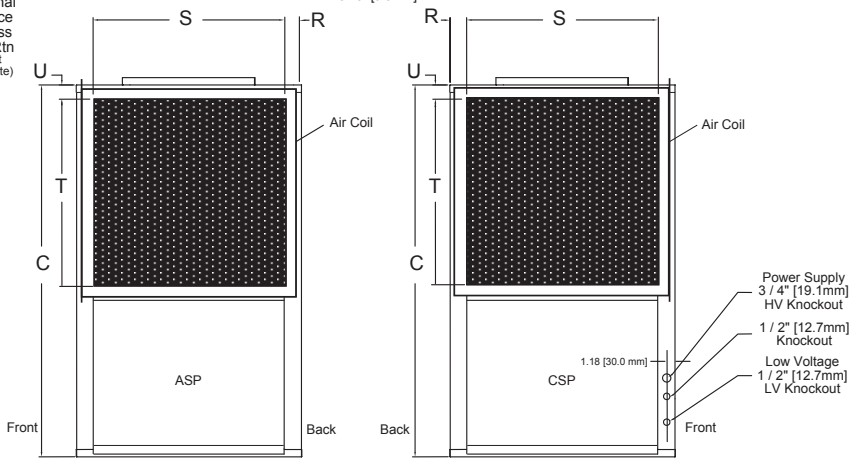

Right Return Right View - Filter Rack Knife Edge

Left Return Left View - Filter Rack Knife Edge

Vertical Upflow Model		Overall Cabinet		
		A Width	B Depth	C Height
026	in	22.4	25.6	48.5
	cm	56.8	65.1	123.2
038	in	25.4	30.6	50.5
	cm	64.5	77.8	128.3
049	in	25.4	30.6	54.5
	cm	64.5	77.8	138.4
064	in	25.4	30.6	58.5
	cm	64.5	77.8	148.6
072	in	25.4	30.6	58.5
	cm	64.5	77.8	148.6

Vertical Upflow Model		Discharge Connection Duct Flange Installed (+/- 0.20 in, +/- 5.1mm)					Return Connection Standard Deluxe Filter Rack (+/- 0.20 in, +/- 5.1mm)			
		M Left Return	N	O Supply Width	P Supply Depth	Q Right Return	R	S Return Depth	T Return Height	U
026	in	7.8	5.8	14.0	14.0	4.9	1.7	22.2	26.2	1.7
	cm	18.3	14.8	35.6	35.6	12.4	4.3	56.4	66.5	4.3
038	in	6.4	6.3	18.0	18.0	5.3	1.7	27.2	26.2	1.7
	cm	16.1	16.0	45.7	45.7	13.5	4.3	69.1	66.5	4.3
049	in	6.4	6.3	18.0	18.0	5.3	1.7	27.2	30.2	1.7
	cm	16.1	16.0	45.7	45.7	13.5	4.3	69.1	76.7	4.3
064	in	6.4	6.3	18.0	18.0	5.3	1.7	27.2	34.2	1.7
	cm	16.1	16.0	45.7	45.7	13.5	4.3	69.1	86.9	4.3
072	in	6.4	6.3	18.0	18.0	5.3	1.7	27.2	34.2	1.7
	cm	16.1	16.0	45.7	45.7	13.5	4.3	69.1	86.9	4.3

Dimensions - Vertical Upflow GT-PC

Vertical Upflow Model		Water Connections							
		D	E	F	G	H	Loop Water FPT	HWG FPT	Cond. Drain
		Loop In	Loop Out	Condensate	HWG In	HWG Out			
026	in	3.9	8.4	19.9	14.6	17.0	1”	1”	3/4"
	cm	9.9	21.3	50.5	37.1	43.2	Swivel	Swivel	MPT
038	in	3.9	8.4	21.8	15.4	18.7	1”	1”	3/4"
	cm	9.9	21.3	55.4	39.1	47.5	Swivel	Swivel	MPT
049	in	3.9	8.4	21.8	15.4	18.7	1”	1”	3/4"
	cm	9.9	21.3	55.4	39.1	47.5	Swivel	Swivel	MPT
064	in	3.9	8.4	21.8	15.4	18.7	1”	1”	3/4"
	cm	9.9	21.3	55.4	39.1	47.5	Swivel	Swivel	MPT
072	in	3.9	8.4	21.8	15.4	18.7	1”	1”	3/4"
	cm	9.9	21.3	55.4	39.1	47.5	Swivel	Swivel	MPT

Vertical Upflow Model		Electrical Knockouts		
		J 1/2”	K 1/2”	L 3/4”
		Low Voltage	External Pump	Power Supply
026 - 072	in	4.4	5.9	7.4
	cm	11.2	15.0	18.8

Condensate connection is 3/4" MPT and is located on the air coil side of the front of the unit.
Unit shipped with deluxe duct collar/filter rack extending from unit 3” [7.6cm] and is suitable for duct connection.
Discharge flange is field installed.

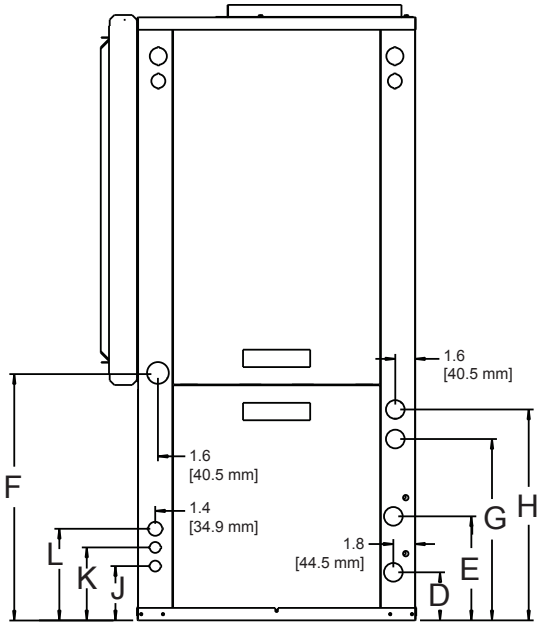

Front-View
YG026

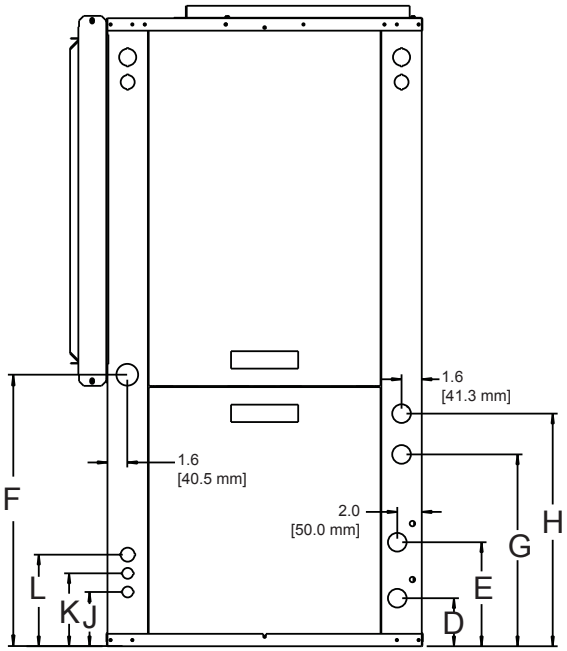

Front-View
YG038 - 072

Dimensions - Vertical Downflow GT-PC

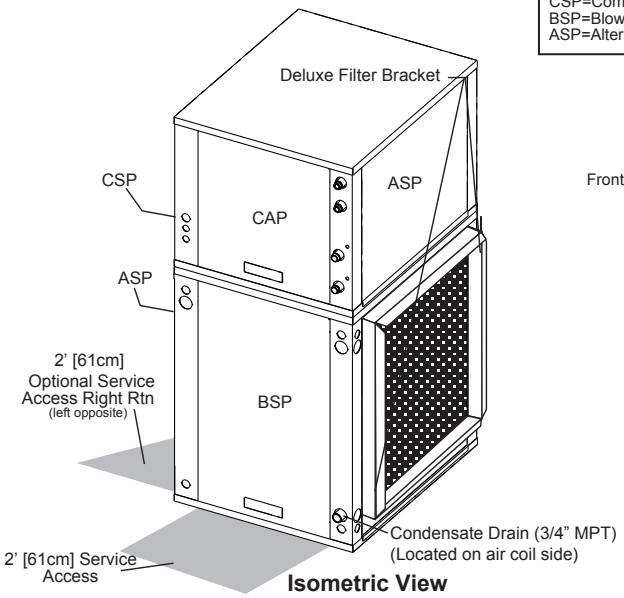

Isometric View

Legend
CAP=Control Access Panel
CSP=Compressor Service Panel
BSP=Blower Service Panel
ASP=Alternate Service Panel

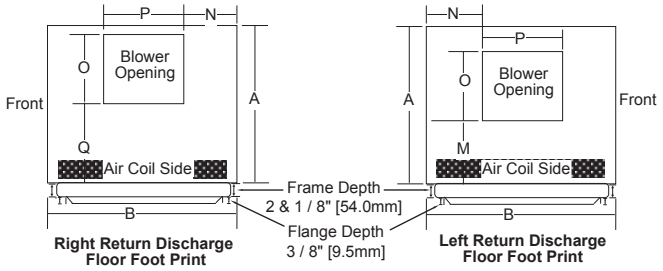

Right Return Discharge Floor Foot Print

Left Return Discharge Floor Foot Print

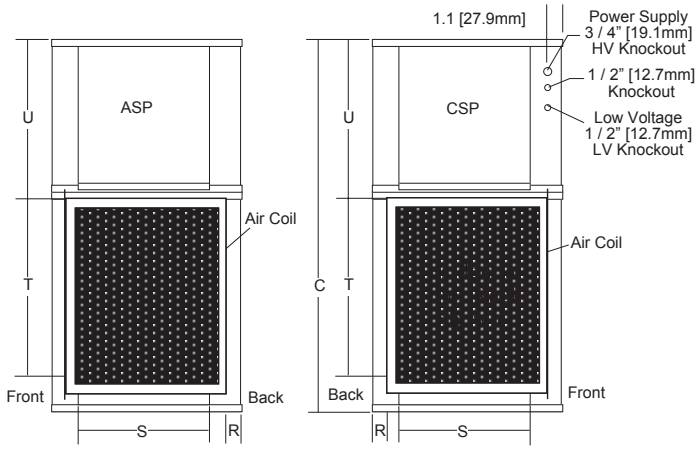

Right Return Right View - Filter Rack Knife Edge

Left Return Left View - Filter Rack Knife Edge

Vertical Downflow Model		Overall Cabinet		
		A Width	B Depth	C Height
026	in	22.4	25.6	52.5
	cm	56.8	65.1	133.4
038	in	25.4	30.6	54.5
	cm	64.5	77.8	138.4
049	in	25.4	30.6	58.5
	cm	64.5	77.8	148.6
064	in	25.4	30.6	62.5
	cm	64.5	77.8	158.8
072	in	25.4	30.6	62.5
	cm	64.5	77.8	158.8

Vertical Downflow Model		Discharge Connection Duct Flange Installed (+/- 0.20 in, +/- 5.1mm)					Return Connection Standard Deluxe Filter Rack (+/- 0.20 in, +/- 5.1mm)			
		M Left Return	N	O Supply Width	P Supply Depth	Q Right Return	R	S Return Depth	T Return Height	U
026	in	6.7	8.4	9.9	9.1	10.8	1.7	22.2	26.2	21.9
	cm	17.1	21.4	25.3	23.0	27.4	4.3	56.4	66.5	55.6
038	in	7.4	9.0	13.1	12.9	10.4	1.7	27.2	26.2	23.9
	cm	18.7	22.9	33.3	32.7	26.5	4.3	69.1	66.5	60.7
049	in	7.4	9.0	13.1	12.9	10.4	1.7	27.2	30.2	23.9
	cm	18.7	22.9	33.3	32.7	26.5	4.3	69.1	76.7	60.7
064	in	7.4	9.0	13.1	12.9	10.4	1.7	27.2	34.2	23.9
	cm	18.7	22.9	33.3	32.7	26.5	4.3	69.1	86.9	60.7
072	in	7.4	9.0	13.1	12.9	10.4	1.7	27.2	34.2	23.9
	cm	18.7	22.9	33.3	32.7	26.5	4.3	69.1	86.9	60.7

Dimensions - Vertical Downflow GT-PC

Vertical Downflow Model		Water Connections							
		D	E	F	G	H	Loop Water FPT	HWG FPT	Cond. Drain
		In	Out	Condensate	HWG In	HWG Out			
026	in	15.4	10.9	4.7	4.7	2.3	1”	1”	3/4"
	cm	39.1	27.7	11.9	11.9	5.8	Swivel	Swivel	MPT
038	in	17.4	12.9	4.7	5.8	2.5	1”	1”	3/4"
	cm	44.2	32.8	11.9	14.7	6.4	Swivel	Swivel	MPT
049	in	17.4	12.9	4.7	5.8	2.5	1”	1”	3/4"
	cm	44.2	32.8	11.9	14.7	6.4	Swivel	Swivel	MPT
064	in	17.4	12.9	4.7	5.8	2.5	1”	1”	3/4"
	cm	44.2	32.8	11.9	14.7	6.4	Swivel	Swivel	MPT
072	in	17.4	12.9	4.7	5.8	2.5	1”	1”	3/4"
	cm	44.2	32.8	11.9	14.7	6.4	Swivel	Swivel	MPT

Vertical Upflow Model		Electrical Knockouts		
		J 1/2”	K 1/2”	L 3/4”
		Low Voltage	External Pump	Power Supply
026	in	14.9	13.4	11.9
	cm	37.8	34.0	30.2
038 - 049	in	16.9	15.3	13.9
	cm	42.9	38.9	35.3

Condensate connection is 3/4" MPT and is located on the air coil side of the front of the unit.
Unit shipped with deluxe duct collar/filter rack extending from unit 3” [7.6cm] and is suitable for duct connection.
Downflow unit does not have discharge flange, and is rated for zero clearance installation.

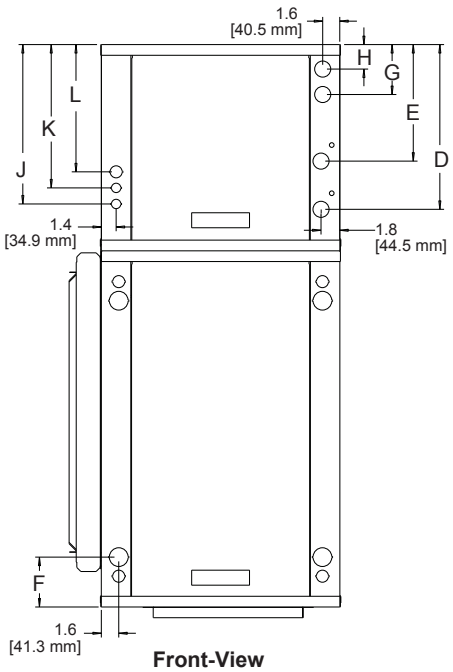

Front-View
YG026

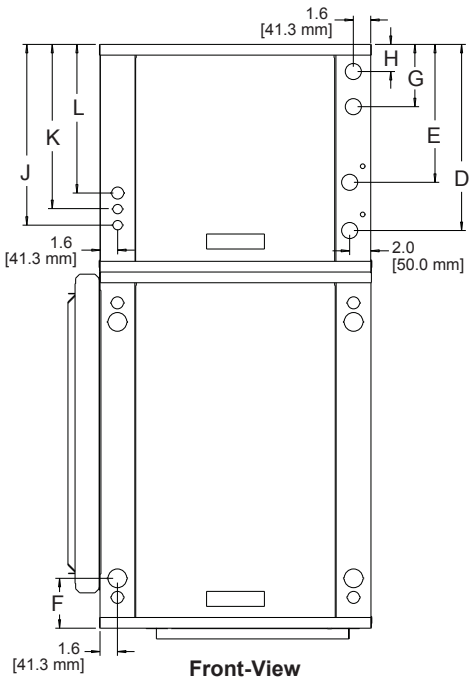

Front-View
YG038 - 072

Dimensions - Horizontal GT-PC

Legend
CAP=Control Access Panel
CSP=Compressor Service Panel
BSP=Blower Service Panel
ASP=Alternate Service Panel

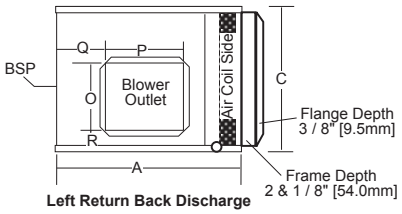

Left Return Back Discharge

Unit Hanger Detail

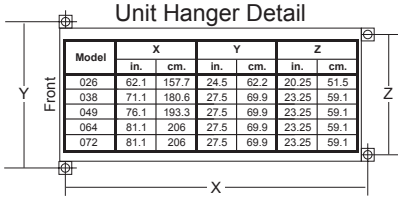

Model	X		Y		Z	
	in.	cm.	in.	cm.	in.	cm.
026	62.1	157.7	24.5	62.2	20.25	51.5
038	71.1	180.6	27.5	69.9	23.25	59.1
049	76.1	193.3	27.5	69.9	23.25	59.1
064	81.1	206	27.5	69.9	23.25	59.1
072	81.1	206	27.5	69.9	23.25	59.1

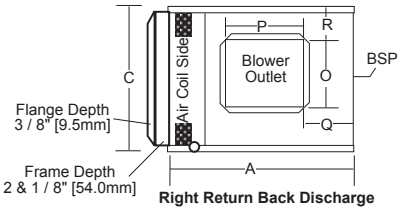

Right Return Back Discharge

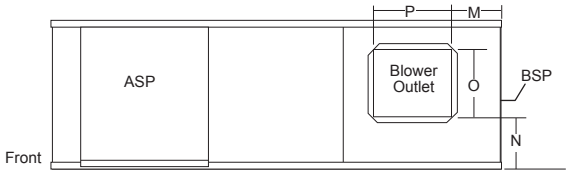

Left Return Straight Discharge

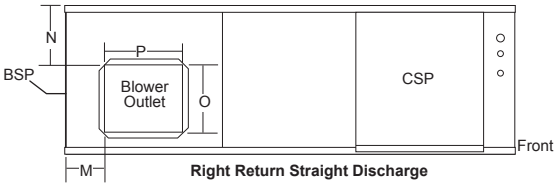

Right Return Straight Discharge

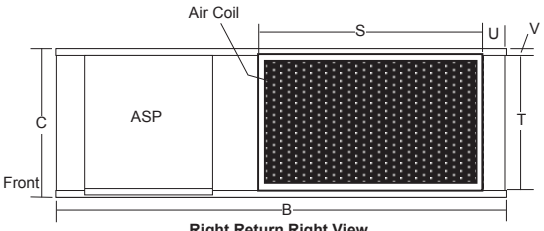

Right Return Right View
- Filter Rack Knife Edge

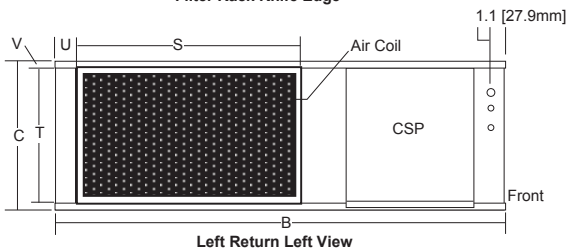

Left Return Left View
- Filter Rack Knife Edge

Horizontal Model		Overall Cabinet		
		A Width	B Depth	C Height
026	in	22.4	62.2	19.3
	cm	56.8	158.0	48.9
038	in	25.4	71.2	21.3
	cm	64.5	180.8	54.0
049	in	25.4	76.2	21.3
	cm	64.5	193.5	54.0
064	in	25.4	81.2	21.3
	cm	64.5	206.2	54.0
072	in	25.4	81.2	21.3
	cm	64.5	206.2	54.0

Horizontal Model		1Discharge Connection Duct Flange Installed (+/- 0.20 in, +/- 5.1mm)						Return Connection Standard Deluxe Filter Rack (+/- 0.20 in, +/- 5.1mm)			
		M	N	O Supply Height	P Supply Width	Q	R	S Return Width	T Return Height	U	V
026	in	3.6	2.0	12.5	15.5	3.6	2.0	33.8	16.2	2.3	1.7
	cm	9.3	5.1	31.8	39.4	9.2	5.2	85.8	41.0	5.8	4.3
038	in	*3.1	1.2	19.0	17.5	*3.1	1.0	34.8	18.2	3.1	1.7
	cm	7.9	3.1	48.3	44.5	7.9	2.6	88.3	46.1	7.8	4.3
049	in	3.1	1.2	19.0	17.5	3.1	1.0	39.8	18.2	3.1	1.7
	cm	7.9	3.1	48.3	44.5	7.9	2.6	101.0	46.1	7.8	4.3
064	in	3.1	1.2	19.0	17.5	3.1	1.0	44.8	18.2	3.1	1.7
	cm	7.9	3.1	48.3	44.5	7.9	2.6	113.7	46.1	7.8	4.3
072	in	3.1	1.2	19.0	17.5	3.1	1.0	44.8	18.2	3.1	1.7
	cm	7.9	3.1	48.3	44.5	7.9	2.6	113.7	46.1	7.8	4.3

*For units with modulating reheat option this dimension is 2.9" (7.4 cm).
1Discharge connection will change when using the accessory auxiliary electric heat package. Refer to the heater IOM for details.

Dimensions - Horizontal GT-PC

Legend
CAP=Control Access Panel
CSP=Compressor Service Panel
BSP=Blower Service Panel
ASP=Alternate Service Panel

LEFT RETURN **RIGHT RETURN**

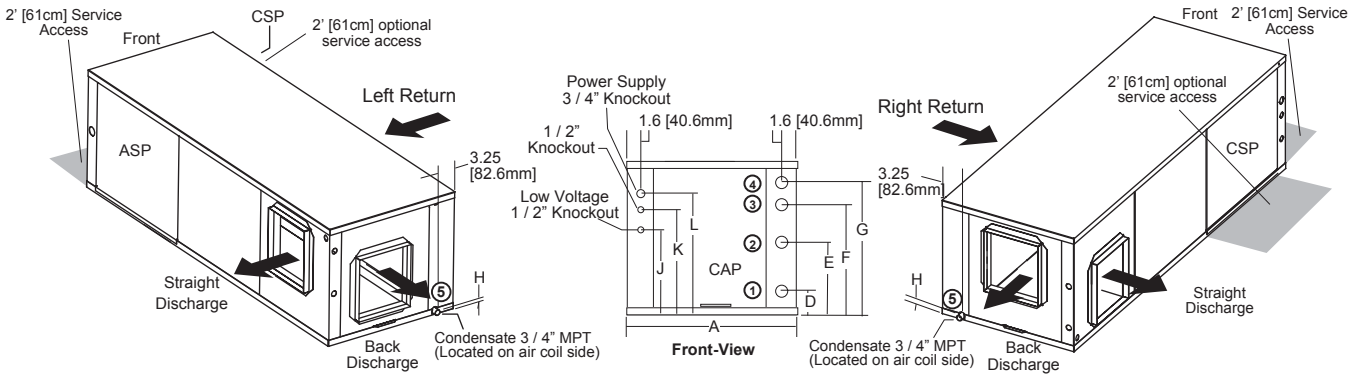

Horizontal Model		Water Connections							
		D	E	F	G	H	Loop Water FPT	HWG FPT	Cond. Drain
		In	Out	HWG IN	HWG Out	Condensate			
026	in	3.9	8.4	19.9	14.6	0.6	1" Swivel	1" Swivel	3/4" MPT
	cm	9.9	21.3	50.5	37.1	1.5			
038	in	3.9	8.4	21.8	15.4	0.6	1" Swivel	1" Swivel	3/4" MPT
	cm	9.9	21.3	55.4	39.1	1.5			
049	in	3.9	8.4	21.8	15.4	0.6	1" Swivel	1" Swivel	3/4" MPT
	cm	9.9	21.3	55.4	39.1	1.5			
064	in	3.9	8.4	21.8	15.4	0.6	1" Swivel	1" Swivel	3/4" MPT
	cm	9.9	21.3	55.4	39.1	1.5			
072	in	3.9	8.4	21.8	15.4	0.6	1" Swivel	1" Swivel	3/4" MPT
	cm	9.9	21.3	55.4	39.1	1.5			

Horizontal Model		Electrical Knockouts		
		J 1/2"	K 1/2"	L 3/4"
		Low Voltage	External Pump	Power Supply
026 - 072	in	4.4	5.9	7.4
	cm	11.2	15.0	18.8

Condensate is 3/4" MPT.
Unit shipped with deluxe duct collar/filter rack extending from unit 3" [7.6cm] and is suitable for duct connection.
Discharge flange and hanger brackets are factory installed.

GT-PC Internal Flow Controller Electrical Wiring Diagram - 96B0005N60

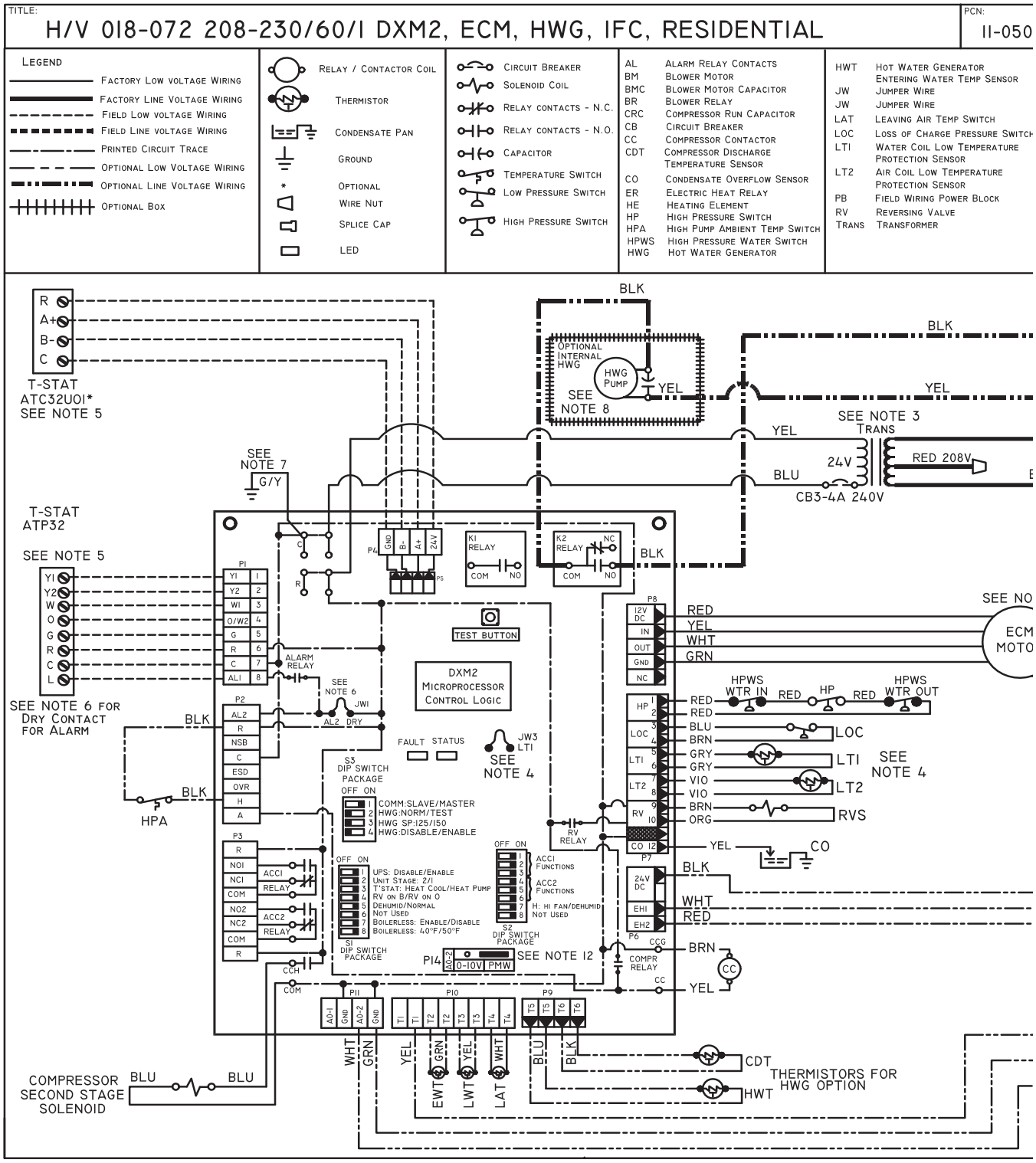

GT-PC Internal Flow Controller Electrical Wiring Diagram - 96B0005N60

DATE:	DRAWING NO:	REV:
9/26/11	96B0005N60	A

NOTES:
1. Compressor and Blower Motor thermally protected internally.
2. All wiring to the unit must comply with NEC and local codes.
3. 208/230V transformer will be connected for 230V operation.
   For 208V operation, disconnect ORG lead at L1, and attach RED lead to L1. Insulate open end of ORG lead.
4. LT1 Thermistor provides low temperature protection for WATER. When using ANTIFREEZE solutions, cut JW3 jumper.
5. Refer to TSTAT Installation, Application, and Operation Manual for Control Wiring to the unit.
   Low voltage Wiring must be "CLASS 1" and voltage rated Equal or Greater Than Unit Supply Voltage.
6. 24V Alarm signal at AL1. For Dry Contact between AL1 & AL2, cut JW1.
7. Transformer secondary ground via CXM/DXM board standoffs & screws to Control Box.
   (Ground available from top two standoffs as shown.)
8. HWG and Heat Exchanger pump only in models with Hot Water Generator option.
   Factory default Temperature setting is 125F, for 150F setting Anti-Scald Valve must be used, see unit IOM for instructions.
9. For ECM Blower Motor air flow adjustment and diagnostic information refer to unit IOM.
10. For auxiliary staging options, consult electric heat installation manual.
11. For Variable Speed pump control and diagnostic information refer to unit IOM.
12. For Variable Speed pump option, place jumper on PMW pins.

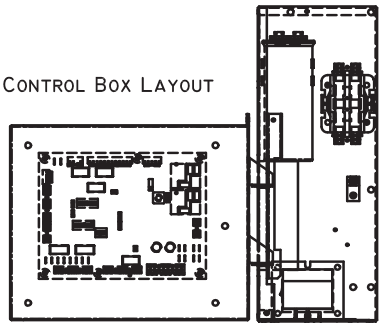

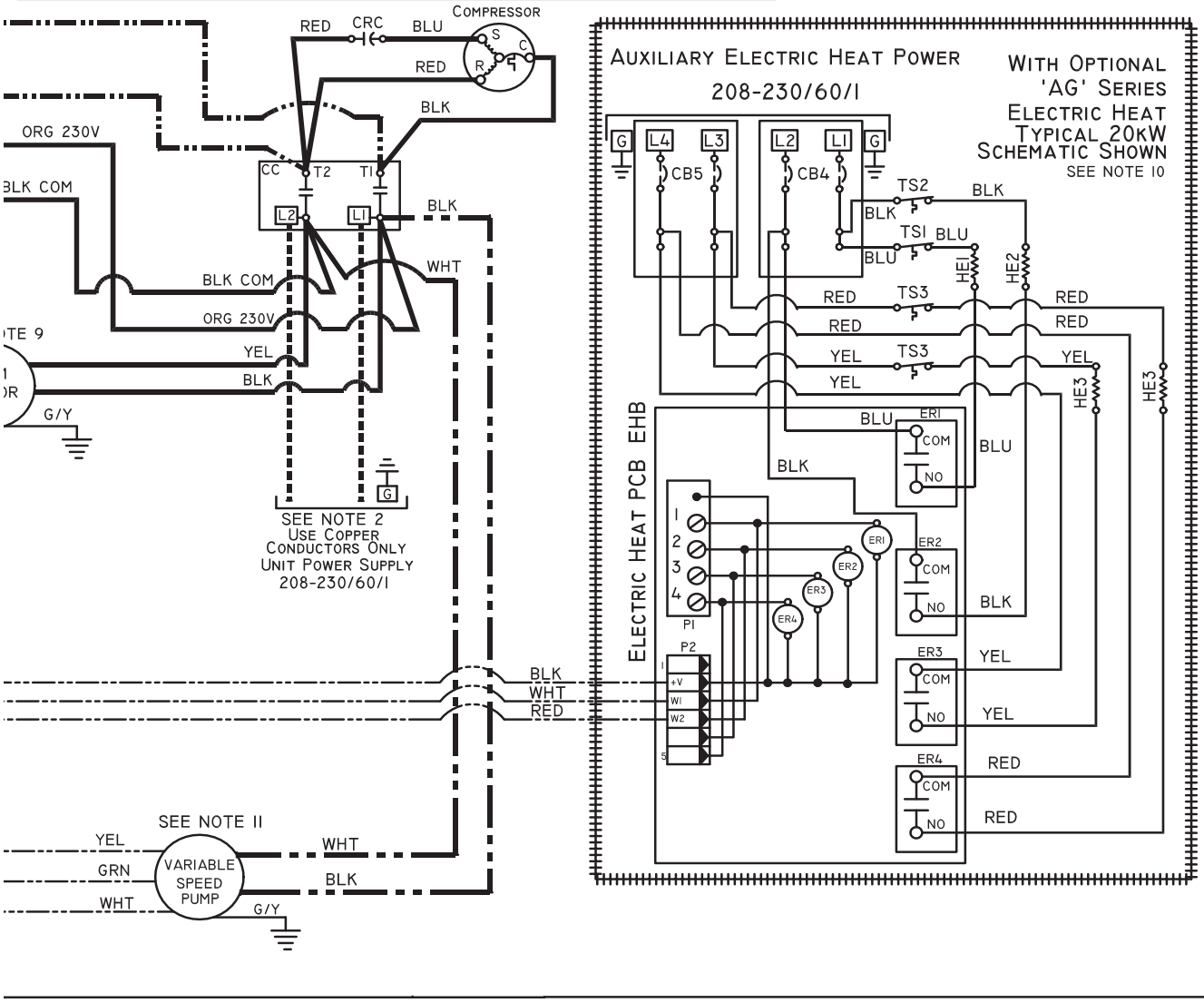

GT-PC Modulating Water Valve Electrical Wiring Diagram - 96B0005N62

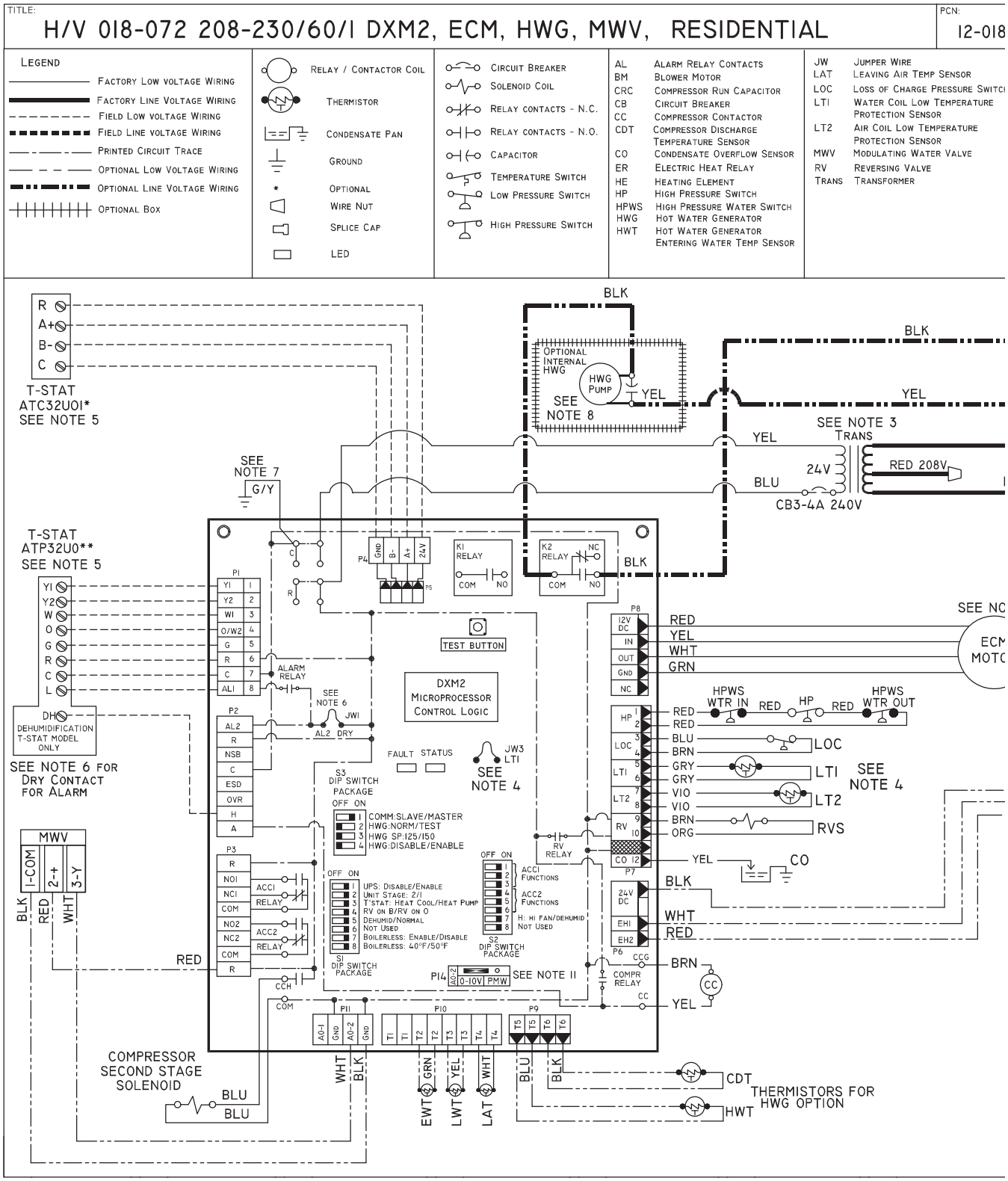

GT-PC Modulating Water Valve Electrical Wiring Diagram - 96B0005N62

DATE:	DRAWING NO:	REV:
4/19/12	96B0005N62	C

NOTES:
1. Compressor and Blower Motor thermally protected internally.
2. All wiring to the unit must comply with NEC and local codes.
3. 208/230V transformer will be connected for 230V operation.
   For 208V operation, disconnect ORG lead at L1, and attach RED lead to L1. Insulate open end of ORG lead.
4. LT1 Thermistor provides low temperature protection for WATER. When using ANTIFREEZE solutions, cut JW3 jumper.
5. Refer to TSTAT Installation, Application, and Operation Manual for Control Wiring to the unit.
   Low voltage Wiring must be "CLASS 1" and voltage rated Equal or Greater Than Unit Supply Voltage.
6. 24V Alarm signal at AL1. For Dry Contact between AL1 & AL2, cut JW1.
7. Transformer secondary ground via CXM/DXM board standoffs & screws to Control Box.
   (Ground available from top two standoffs as shown.)
8. HWG and Heat Exchanger pump only in models with Hot Water Generator option.
   Factory default Temperature setting is 125F, for 150F setting Anti-Scald Valve must be used, see unit IOM for instructions.
9. For ECM Blower Motor air flow adjustment and diagnostic information refer to unit IOM.
10. For auxiliary staging options, consult electric heat installation manual.
11. For MWV option, place jumper on 0-10V pins.
12. For MWV option, ensure actuator direction switch is set as shown.

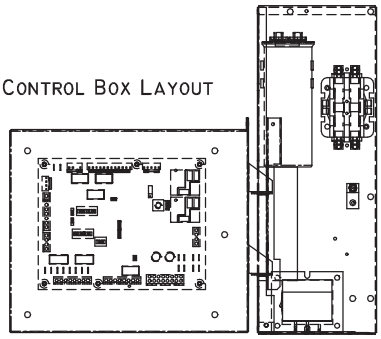

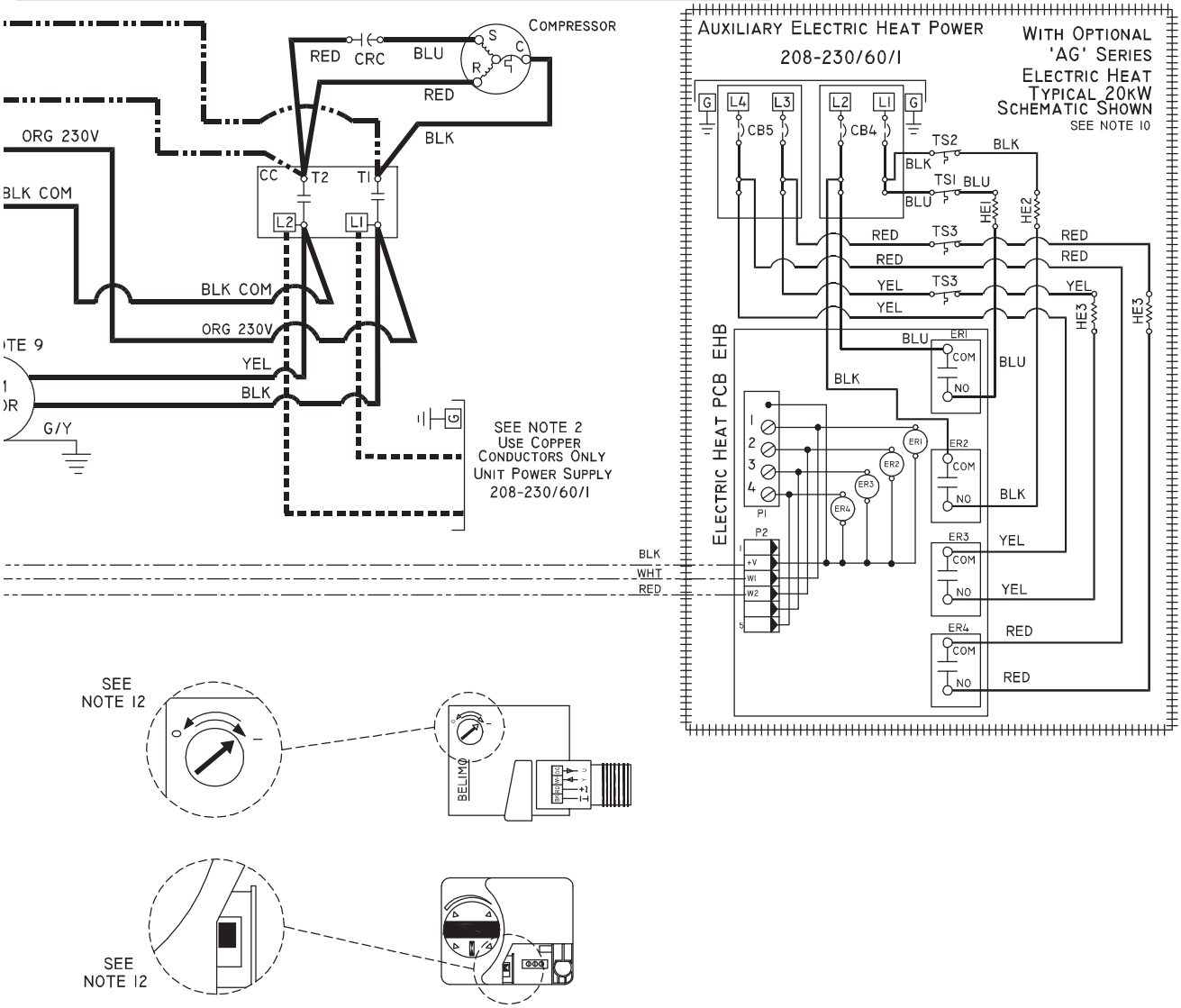

Electrical Data

With Internal Flow Controller

Model	Compressor			HWG Pump FLA	Ext Loop FLA	Fan Motor FLA	Total Unit FLA	Min Circuit Amps	Max/ Fuse HACR
	RLA	LRA	Qty						
026	11.7	58.3	1	0.5	1.7	3.9	17.8	20.7	30
038	15.8	83.0	1	0.5	1.7	3.9	21.4	25.2	40
049	21.7	104.0	1	0.5	1.7	6.9	30.3	35.6	50
064	27.1	152.9	1	0.5	1.7	6.9	36.2	42.9	70
072	29.7	179.2	1	0.5	1.7	6.9	38.8	46.2	70

Rated Voltage of 208-230/60/1
HACR circuit breaker in USA only

Min/Max Voltage of 197/254
All fuses Class RK-5

With Motorized Modulating Valve

Model	Compressor			HWG Pump FLA	Fan Motor FLA	Total Unit FLA	Min Circuit Amps	Max/ Fuse HACR
	RLA	LRA	Qty					
026	11.7	58.3	1	0.5	3.9	16.1	19.0	30
038	15.8	83.0	1	0.5	3.9	19.7	23.5	35
049	21.7	104.0	1	0.5	6.9	28.6	33.9	50
064	27.1	152.9	1	0.5	6.9	34.5	41.2	60
072	29.7	179.2	1	0.5	6.9	37.1	44.5	70

Rated Voltage of 208-230/60/1
HACR circuit breaker in USA only

Min/Max Voltage of 197/254
All fuses Class RK-5

ECM Blower Control

The ECM fan is controlled directly by the DXM2 control board that converts thermostat inputs and CFM settings to signals used by the ECM motor controller. To take full advantage of the ECM motor features, a communicating multi-stage thermostat should be used (ATC32U**).

The DXM2 control maintains a selectable operating airflow [CFM] for each heat pump operating mode. For each operating mode there are maximum and minimum airflow limits. See the ECM Blower Performance tables for the maximum, minimum, and default operating airflows.

Airflow levels are selected using the configuration menus of a communicating thermostat (ATC32U**) or diagnostic tool (ACDU**). The configuration menus allow the installer to independently select and adjust the operating airflow for each of the operating modes. Air flow can be selected in 25 CFM increments within the minimum and maximum limits shown in the ECM Blower Performance Table. The blower operating modes include:

- First Stage Cooling (Y1 & O)
- Second Stage Cooling (Y1, Y2, & O)
- First Stage Cooling in Dehumidification Mode (Y1, O, & Dehumid)
- Second Stage Cooling in Dehumidification Mode (Y1, Y2, O, & Dehumid)
- First Stage Heating (Y1)
- Second Stage Heating (Y1 & Y2)
- Third Stage (Auxiliary) Heating (Y1, Y2, & W)
- Emergency Heating (W with no Y1 or Y2)
- Fan (G with no Y1, Y2, or W)

It is highly recommended that ATC32U** or ACDU** be used to set dehumidification mode electronically. Dehumidification can NOT be selected when using a non-communicating thermostat with a vFlow™ unit with Internal Flow Controller (pump). For dehumidification settings on other units using the non-communicating stat, refer to DXM2 AOM (part #97B0003N15).

The ECM motor includes “soft start” and “ramp down” features. The soft start feature is a gentle increase of motor rpm at blower start up. This creates a much quieter blower start cycle.

The ramp down feature allows the blower to slowly decrease rpm to a full stop at the end of each blower cycle. This creates a much quieter end to each blower cycle and adds overall unit efficiency.

The ramp down feature is eliminated during an ESD (Emergency Shut Down) situation. When the DXM2 ESD input is activated, the blower and all other control outputs are immediately de-activated.

The ramp down feature (also known as the heating or cooling “Off Delay”) is field selectable by the installer. The allowable range is 0 to 255 seconds.

Airflow Configuration Screen on Communicating Thermostat

AIRFLOW SELECTION	CFM
HEAT STAGE 1	600
HEAT STAGE 2	750
AUXILIARY HEAT	850
EMERGENCY HEAT	850
COOL STAGE 1	525
COOL STAGE 2	700
COOL DEHUMID 1	425
COOL DEHUMID 2	550
CONTINUOUS FAN	350
HEAT OFF DELAY	60
COOL OFF DELAY	30
◀ PREVIOUS	NEXT ▶

Blower Performance Data

Airflow in CFM with wet coil and clean air filter

Model	Max ESP (in. wg)	Fan Motor (hp)	Range	Cooling Mode		Dehumid Mode		Heating Mode		Fan Only Mode	Aux/ Emerg Mode
				Stg 2	Stg 1	Stg 2	Stg 1	Stg 2	Stg 1		
026	1.0	1/2	Default	700	525	550	425	750	600	350	850
			Maximum	1000	800	800	600	1000	850	1000	1000
			Minimum	600	450	550	400	600	450	300	700
038	0.9	1/2	Default	1050	800	850	650	1100	850	550	1350
			Maximum	1500	1100	1200	900	1500	1100	1500	1500
			Minimum	900	600	825	550	900	600	450	1350
049	1.0	1	Default	1400	1050	1100	850	1500	1150	700	1500
			Maximum	2000	1500	1600	1200	2000	1500	2000	2000
			Minimum	1200	900	1100	825	1200	900	600	1350
064	0.7	1	Default	1750	1300	1400	1050	1875	1450	875	1875
			Maximum	2300	1900	2000	1500	2300	1900	2300	2300
			Minimum	1500	1100	1375	1000	1500	1100	750	1500
072	0.7	1	Default	1900	1450	1650	1250	2000	1650	950	2000
			Maximum	2300	2200	2000	1800	2300	2200	2300	2300
			Minimum	1800	1350	1650	1250	1800	1350	900	1800

Airflow is controlled within 5% up to the Max ESP shown with wet coil

Auxiliary Heat Ratings

Auxiliary Electric Heat Model	50YG Models			kW Rating		Btuh Rating		Minimum CFM Required
	024	030-042	048-060	240V	208V	240V	208V	
AGM4A/C	•	•		3.8	2.9	13000	9900	500
AGM5A/C	•	•		4.8	3.6	16300	12300	500
AGM8A/C	•	•		7.6	5.7	25900	19400	650
AGM10A/C	•	•		9.6	7.2	32700	24600	650
AGM12A/C		•		11.4	8.6	38900	29200	750
AGL4A/C			•	3.8	2.9	13000	9900	500
AGL10A/C			•	9.6	7.2	32700	24600	1300
AGL15A/C			•	14.4	10.8	49100	36900	1350
AGL20A/C			•	19.2	14.4	65500	49200	1350

Black area denotes compatibility
Note: Horizontal units rated for zero clearance unit and 1" clearance for the first three feet of duct, Vertical units rated for zero clearance for both unit and duct.

Auxiliary Heat Electrical Data - Rev 'A' Heaters

Auxiliary Electric Heat Model	Supply Circuit	Heater Amps		Minimum Circuit Amps		Maximum Fuse	
		240V	208V	240V	208V	240V	208V
HGM4A	Single	15.8	14.0	19.8	17.1	20	20
HGM5A	Single	20.0	17.3	25.0	21.6	25	25
HGM8A	Single	31.7	27.5	39.6	34.4	40	35
HGM10A	Single	40.0	34.7	50.0	43.4	50	45
HGL4A	Single	15.8	14.0	19.8	17.1	20	20
HGL10A	Single	40.0	34.7	50.0	43.4	50	45
HGM12A	Single	47.5	41.2	59.4	51.5	60	60
	Dual - L1/L2 Dual - L3/L4	31.7 15.8	27.5 13.7	39.6 19.8	34.4 17.1	40 20	35 20
HGL15A	Single	60.0	52.0	75.0	65.0	80	70
	Dual - L1/L3	40.0	34.7	50.0	43.4	50	45
	Dual - L2/L4	20.0	17.3	25.0	21.6	25	25
HGL20A	Single	80.0	69.3	100.0	86.6	100	90
	Dual - L1/L3	40.0	34.7	50.0	43.4	50	45
	Dual - L2/L4	40.0	34.7	50.0	43.4	50	45

All heaters rated single phase 208-240V 60Hz
All models 12kW or larger feature internal circuit breakers
All Fuses UL Class K general purpose

Accessories & Warranty

Accessories & Options

Hot Water Generator
An optional insulated heat reclaiming desuperheater coil of vented double-wall copper construction suitable for potable water shall be provided. The coil, hot water circulating pump, and associated controls shall be factory mounted inside the unit cabinet. Sensors mounted on the compressor discharge line and the potable water inlet shall transmit temperatures to the unit microprocessor where internal logic will determine when hot water generation is feasible. The microprocessor shall cycle the pump periodically during unit operation to sample the DHW tank temperature. The microprocessor shall include multiple temperature set points to select from for hot water generation control.

Cupro-Nickel Heat Exchanger
An optional corrosion resistant CuNi coaxial heat exchanger shall be factory installed in lieu of standard copper construction.

Thermostat (field installed)
An electronic communicating LCD thermostat shall be provided. The thermostat shall offer three stages of heating and two stages of cooling with precise temperature control and have a four-wire connection to the unit. The thermostat shall be capable of manual or automatic change-over operation and shall operate in standard or programmable mode. An integrated humidity control feature shall be included to control a humidifier and/or a dehumidifier. The thermostat shall include a utility demand reduction feature to be initiated by an independent time program or an external input.

The thermostat shall have a comprehensive installation setup menu to include configuration of the unit CFM for each mode of operation and configuration of the water flow rate through the unit, including variation of the water flow rate based on the stage of unit operation.

The thermostat shall display system faults with probable cause and troubleshooting guidance. Comprehensive service diagnostics menus shall display, system inputs, system outputs, configuration settings, Geo source inlet and outlet temperatures, compressor discharge line temperature, liquid line temperature, leaving air temperature, and entering potable water temperature (on units equipped with a Hot Water Generator). The thermostat shall allow for immediate manual control of all DXM2 outputs at the thermostat for rapid troubleshooting.

Auxiliary Heater (field installed)
An external, field-installed electric heater shall provide supplemental and/or emergency heating capability when used with the three stage heating thermostat.

Warranty Information

The 2010 standard warranty applies to units ordered on or after July 1, 2010. See Bryant's 2010 Limited Express Residential Warranty Certificate CA234 for specific coverage and limitation.

Bryant residential class heat pumps are backed by a ten-year limited warranty on all unit parts, including the following accessories when installed with Bryant units: Flow Controllers & Electric Heaters.

Bryant goes even further to back up its commitment to quality by including a service labor allowance for the first five years on refrigeration circuit components and two years on all other parts, auxiliary heaters and geothermal pumping modules.

The Optional Extended Factory Service Labor Allowance Warranty offers additional length of term protection to the consumer by offsetting service labor costs for 10 years.

To order this warranty, contact your Bryant distributor. This coverage must be purchased within 90 days of unit installation. See Limited Express Extended Labor Warranty Certificate CA235 for details.

Notes

Revision History

Date	Page #	Description
1 Oct., 12	All	First Published