577C--K Ultra Low NOx Legacy™13.4 SEER2 Single-Packaged Air Conditioner and Gas Furnace System with Puron® (R-410A) Refrigerant Single Phase 2-5 Nominal Tons (Sizes 24-60) Three Phase 3-5 Nominal Tons (Sizes 36-60)

Product Data

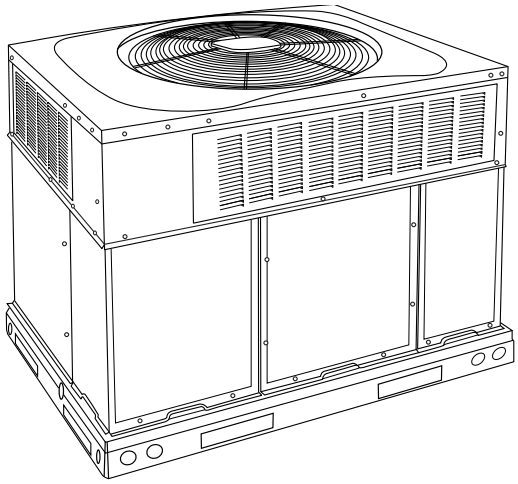

A09033

Fig. 1 – Unit 577C

Single-Packaged Products with Energy-Saving Features and Puron® R-410A refrigerant.

- 13.4 SEER2
- 11.05 EER2
- 81.0% AFUE
- ECM Blower Motor-Standard
- Direct Spark Ignition
- Low Sound Levels
- Dehumidification Feature
- Louvered Condenser Coil Guard-Standard

Features/Benefits

One-piece heating and cooling units with low sound levels, easy installation, low maintenance, and dependable performance.

Puron is Bryant's unique refrigerant designed to be environmentally balanced. Puron is an HFC refrigerant which does not contain chlorine that can harm the ozone layer. The most important advantage of Puron refrigerant is that it has not been banned in future air conditioning systems as the traditional refrigerant R-22 has been. Puron refrigerant is in service in millions of systems proving highly reliable and is non-ozone depleting.

Easy Installation

Factory-assembled package is a compact, fully self-contained, combination gas heating/electric cooling unit that is prewired, pre-piped, and pre-charged for minimum installation expense. These units are available in a variety of standard and optional heating/ cooling size combinations with voltage options to meet residential and light commercial requirements. Units are lightweight and install easily on a rooftop or at ground level. The high tech composite base eliminates rust problems associated with ground level applications.

Innovative Unit Base Design

On the inside a high-tech composite material will not rust and incorporates a sloped drain pan which improves drainage and helps inhibit mold, algae and bacterial growth. On the outside metal base rails provide added stability as well as easier handling and rigging.

Convertible Duct Configuration

Unit is designed for use in either downflow or horizontal applications. Each unit is converted from horizontal to downflow and includes two horizontal duct covers. Downflow operation is provided in the field to allow vertical ductwork connections. The basepan seals on the bottom openings to ensure a positive seal in the vertical airflow mode.

Efficient operation high-efficiency design offers SEER2 (Seasonal Energy Efficiency Ratios) of 13.4, 11.05 EER2, and AFUE (Annual Fuel Utilization Efficiency) ratings of 81.0%.

Energy-saving, direct spark ignition saves gas by operating only when the room thermostat calls for heating. Standard units are furnished with natural gas controls.

Ultra Low NOx units meet California air quality district standards requiring NOx emissions no more than 14ng/J.

Durable, Dependable Components

Turbo-tubular™ heat exchangers are constructed of stainless steel for corrosion resistance and optimum heat transfer for improved efficiency. The tubular design permits hot gases to make multiple passes across the path of the supply air.

In addition, dimples located on the heat exchanger walls force the hot gases to stay in close contact with the walls, improving heat transfer.

ECM Blower Motor is standard on all models.

Direct-drive PSC (Permanent Split Capacitor) condenser-fan motors are designed to help reduce energy consumption and provide for cooing operation down to 40°F (4.4°C) outdoor temperature. Motormaster® II low ambient kit is available as a field-installed accessory.

Thermostat Controls

Time Guard® II anti-short cycle protection circuitry. If a non-corporate thermostat without anti-short cycle protection is used the Time Guard II field-installed anti-short cycle kit is recommended.

Refrigerant system is designed to provide dependability. Liquid filter driers are used to promote clean, unrestricted operation. Each unit leaves the factory with a full refrigerant charge. Refrigerant service connections make checking operating pressures easier.

High pressure switch provides added reliability for the compressor.

Indoor and outdoor coils are computer-designed for optimum heat transfer and efficiency. The indoor coil is fabricated from aluminum tube and aluminum fins and is located inside the unit for protection against damage. The outdoor coil is internally mounted on the top tier of the unit.

Low sound ratings ensure a quiet indoor and outdoor environment with sound ratings as low as 70.7 dBA.

Easy to service cabinets provide easy 3-panel accessibility to serviceable components during maintenance and installation. The basepan with integrated drain pan provides easy ground level‘ installation with mounting pad. A nesting feature ensures a positive basepan to roof curb seal when the unit is roof mounted. A convenient 3/4-in. (19.05 mm) wide perimeter flange makes frame mounting on a rooftop easy.

Standard horizontal metal duct covers with insulation come with the unit and cover the horizontal duct openings. These can be left in place if the units are converted to downflow.

Integrated Gas Control (IGC) board provides safe and efficient control of heating and simplifies trouble-shooting through its built-in diagnostic function.

Cabinets are constructed of heavy duty, phosphated, zinc-coated prepainted steel capable of withstanding 500 hours in salt spray. Interior surfaces of the evaporator/heat exchanger compartment are insulated with cleanable semi-rigid insulation board, which keeps the conditioned air from being affected by the outdoor ambient temperature and provides improved indoor air quality. (Conforms to American Society of Heating, Refrigeration and Air Conditioning Engineers 62.2.) The sloped drain pan minimizes standing water in the drain. An external drain is provided.

Limited Warranty*

- Default 5-year parts limited warranty
  - 10-year parts limited warranty with timely registration. Equipment must be registered within 90 days of original installation, except in jurisdictions where warranty benefits cannot be conditioned on registration.

* Applies to original purchaser/homeowner and 5 years to subsequent owners.

- Default 5-year on compressor limited warranty
  - 10-year on compressor limited warranty with timely registration. Equipment must be registered within 90 days of original installation, except in jurisdictions where warranty benefits cannot be conditioned on registration.

* Applies to original purchaser/homeowner and 5 years to subsequent owners.

- Default 20-year stainless steel heat exchanger limited warranty
  - Life stainless steel limited warranty with timely registration. Equipment must be registered within 90 days of original installation, except in jurisdictions where warranty benefits cannot be conditioned on registration.

* Applies to original purchaser/homeowner and 5 years to subsequent owners. See warranty certificate for complete details and restrictions.

Table of Contents

Features/Benefits 1
Model Number Nomenclature 3
AHRI Capacities 4
Accessories 7
Unit Dimensions 8
Unit Dimensions 9
Performance Data 12
Application Data 26
Electrical Data. 27
Connection Wiring Schematic 208/230-1-60 28
Controls. 32
Guide Specifications 33

Model Number Nomenclature

577C N W K 24 040 U A - -

Type of Unit
577C - Single Packaged Air Conditioner and Gas Furnace System

Electrical Supply
N - 208/230-1-60
P - 208/230-3-60
E - 460-3-60

Fuel and Controls
W - Natural Gas

Major Series

Nominal Cooling Capacity
024 - 2.0 Tons
030 - 2.5 Tons
036 - 3.0 Tons
042 - 3.5 Tons
048 - 4.0 Tons
060 - 5.0 Tons

Nominal Heat Input Size (Btuh)
040 - 45,000
060 - 60,000
090 - 89,000

Low NOx Indicator
- Standard
N - Low NOx
U - Ultra Low NOx

Brand Name
A - Common Unit

Options
-- No optons

Use of the AHRI Certified TM Mark indicates a manufacturer's participation in the program For verification of certification for individual products, go to www.ahridirectory.org.

SAP ORDERING NO.	NOMINAL COOLING CAPACITY (Btuh)	NOMINAL HEATING INPUT (Btuh)	VOLTS-PHASE (60 HZ)	APPROX SHIP WT (LB)
577CNWK24040U	24,000	45,000	208/230-1	339
577CNWK24060U	24,000	60,000	208/230-1	339
577CNWK30040U	30,000	45,000	208/230-1	348
577CNWK30060U	30,000	60,000	208/230-1	348
577CNWK36060U	36,000	60,000	208/230-1	394
577CPWK36060U	36,000	60,000	208/230-3	394
577CNWK42060U	42,000	60,000	208/230-1	428
577CPWK42060U	42,000	60,000	208/230-3	428
577CNWK42090U	42,000	89,000	208/230-1	428
577CPWK42090U	42,000	89,000	208/230-3	428
577CNWK48090U	48,000	89,000	208/230-1	481
577CPWK48090U	48,000	89,000	208/230-3	481
577CNWK60090U	60,000	89,000	208/230-1	455
577CPWK60090U	60,000	89,000	208/230-3	455

Manufacturer reserves the right to change, at any time, specifications and designs without notice and without obligations.

AHRI* Capacities
Cooling Capacities and Efficiencies

UNIT SIZE	NOMINAL TONS	STANDARD CFM	COOLING CAPACITY†	EER2‡	SEER2**
24	2	750	22800	11.05	13.4
30	2.5	950	28000	11.05	13.4
36	3	1150	33800	11.05	13.4
42	3.5	1350	39000	11.05	13.4
48	4	1600	47000	11.05	13.4
60	5	1750	56000	11.05	13.4

*. Air Conditioning, Heating & Refrigeration Institute.
†. Rated in accordance with U.S. Government DOE Department of Energy) test procedures and/or AHRI Standards 210/240.
‡. At "A" conditions-80°F (26.7°C) indoor db/67°F (19.4°C) indoor wb & 95°F (35°C) outdoor db.
**. Rated in accordance with AHRI Standard 270.
Notes:
1. Ratings are net values, reflecting the effects of circulating fan heat.
Ratings are based on:
Cooling Standard: 80°F (26.7°C) db, 67°F wb (19.4°C) indoor entering-air temperature and 95°F db (35°C) outdoor entering-air temperature.
2. Before purchasing this appliance, read important energy cost and efficiency information available from your retailer.
LEGEND
dB-Sound Levels (decibels)
db—Dry Bulb
SEER—Seasonal Energy Efficiency Ratio
wb—Wet Bulb
COP-Coefficient of Performance

Gas Heating Capacities and Efficiencies, Single and Three Phase Models

Unit Size	Heating Input (Btuh)	Output Capacity (Btuh)	Temperature Rise Range °F (°C)	AFUE (%)
24040 30040	45,000	37,000	25-55 (14-31)	81.0
24060 30060 36060 42060	60,000	49,000	25-55 (14-31)	81.0
42090 48090 60090	89,000	73,000	35-65 (19-36)	81.0

LEGEND
AFUE—Annual Fuel Utilization Efficiency
NOTE: Before purchasing this appliance, read important energy cost and efficiency information available from your retailer.

A-Weighted Sound Power Level

UNIT SIZE	STANDARD RATING (dBA)	TYPICAL OCTAVE BAND SPECTRUM (dBA without tone adjustment)						
		125	250	500	1000	2000	4000	8000
24	70.7	59.4	58.5	58.3	60.4	56.7	52.6	46.9
30	73.4	53.8	59.9	62.3	64.0	61.4	53.8	45.6
36	74.8	67.1	60.3	64.3	63.8	61.9	57.1	50.8
42	74.9	62.5	63.1	63.7	65.5	61.5	57.5	53.5
48	75.4	64.1	61.0	65.5	63.7	61.8	60.1	56.1
60	76.6	65.4	63.7	67.9	66.7	62.7	58.9	55.6

NOTE: Tested in compliance with AHRI 270 but not listed with AHRI.

Manufacturer reserves the right to change, at any time, specifications and designs without notice and without obligations.

ECONOMIZER

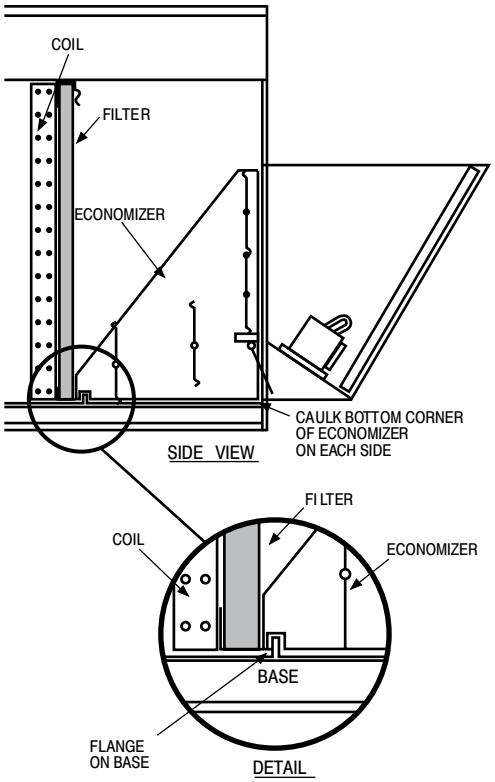

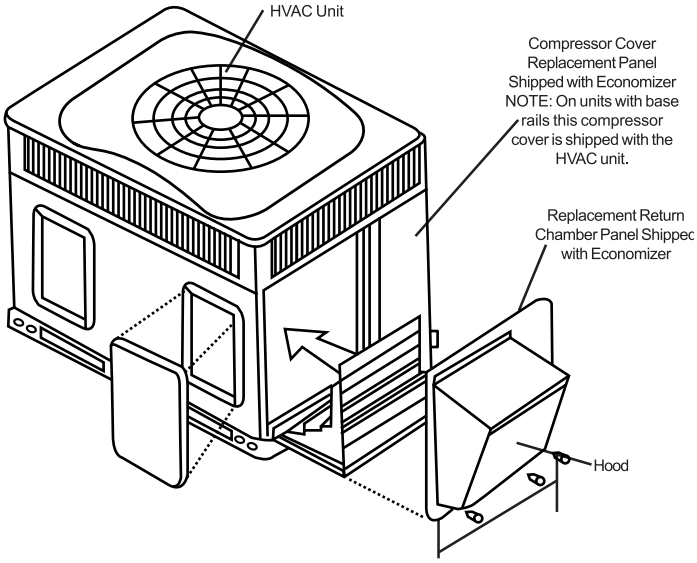

Vertical Economizer

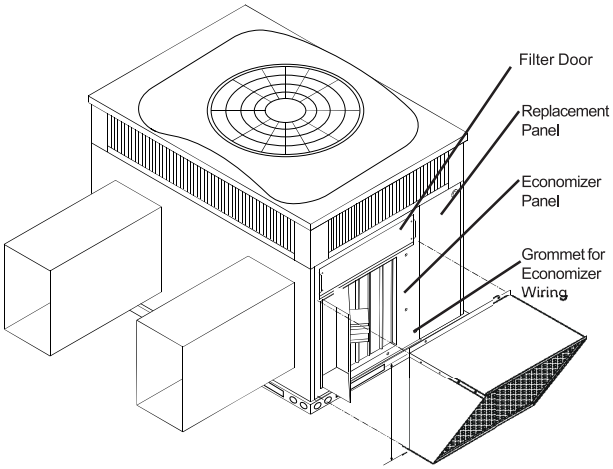

Horizontal Economizer

FILTER RACK

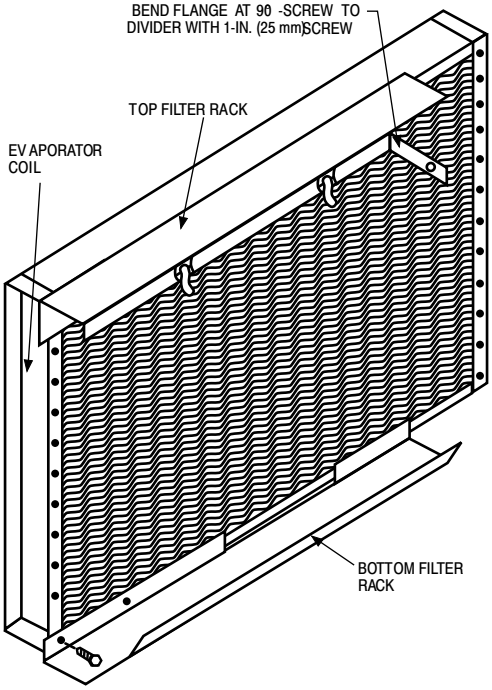

MANUAL OUTSIDE AIR DAMPER

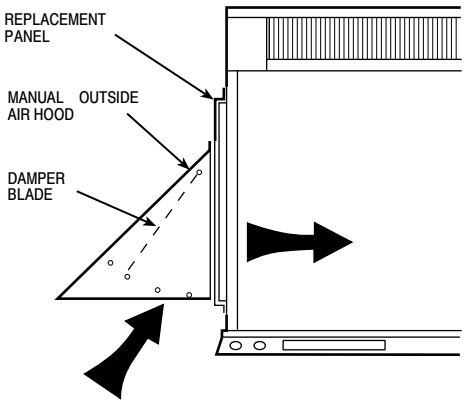

A09375

Physical Data

UNIT SIZE	24040	24060	30040	30060	36060	42060	42090	48090	60090
NOMINAL CAPACITY (ton)	2	2	2-1/2	2-1/2	3	3-1/2	3-1/2	4	5
SHIPPING WEIGHT lb. SHIPPING WEIGHT (kg)	339 154	339 154	348 158	348 158	394 179	428 194	428 194	481 218	495 225
COMPRESSOR / QUANTITY	Scroll / 1								
REFRIGERANT (R-410A) Quantity lb. Quantity (kg)	 6.4 2.9	 6.4 2.9	 6.0 2.7	 6.0 2.7	 5.75 2.6	 6.0 2.7	 6.0 2.7	 9.0 4.1	 10.75 4.9
REFRIGERANT METERING DEVICE	Orifice								TXV
ORIFICE ID in. / mm	.059 / 1.5	.059 / 1.5	.063 / 1.60	.063 / 1.60	.070 / 1.78	.073 / 1.85	.073 /1.85	.080 / 2.03	N/A
OUTDOOR COIL Rows...Fins/in. Face Area (sq ft)	 1..21 11.9	 1...21 11.9	 1...21 13.6	 1...21 13.6	 1...21 13.6	 1...21 13.6	 1...21 13.6	 1...21 23.3	 2..21 17.5
OUTDOOR FAN Nominal CFM Diameter in. Diameter (mm) Motor Hp (Rpm)	 2500 24 609.6 1/12 (810)	 2500 24 609.6 1/12 (810)	 3200 24 609.6 1/5 (810)	 3200 24 609.6 1/5 (810)	 3500 26 660.4 1/2 (810)	 3500 26 660.4 3/4 (810	 3500 26 660.4 3/4 (810)	 3500 26 660.4 1/5 (810)	 3500 26 660.4 1/5 (810)
INDOOR COIL Rows...Fins/in. Face Area (sq ft)	 3...17 3.7	 3...17 3.7	 3...17 3.7	 3...17 3.7	 2...17 5.6	 3...17 4.7	 3...17 4.7	 3...17 5.6	 3...17 5.6
INDOOR BLOWER Nominal Cooling Airflow (CFM) Size in. Size (mm.) Motor HP (RPM)	 750 10x10 254x254 1/2 (1050)	 750 10x10 254x254 1/2 (1050)	 950 10x10 254x254 1/2 (1050)	 950 10x10 254x254 1/2 (1050)	 1150 11x10 279.4x254 3/4 (1000)	 1350 11x10 279.4x254 1/2 (1050)	 1350 11x10 279.4x254 1/2 (1050)	 1600 11x10 279.4x254 1.0 (1075)	 1750 11x10 279.4x254 1.0 (1075)
FURNACE SECTION* Burner Orifice No. (Qty...Drill Size) 1 & 3 Phase Ultra Low NOx Natural Gas (Factory Installed)	 1...0.125” size	 1...#28	 1...0.125” size	 1...#28	 1...#28	 1...#28	 1...#18	 1...#18	 1...#18
HIGH-PRESSURE SWITCH (psig) Cut-out Reset (Auto)	650 +/- 15 420 +/- 25								
LOSS-OF-CHARGE / LOW-PRESSURE SWITCH (Liquid Line) (psig) cut-out Reset (auto)	NA								
RETURN-AIR FILTERS† ‡ Throwaway Size in. (mm)	2 each 20x12x1 508x305x25				1 each 24x16x1 610x406x25 24x18x1 610x457x25	1 each 24x14x1 610x356x25 24x16x1 610x406x25		1 each 24x16x1 610x406x25 24x18x1 610x457x25	

*. Based on altitude of 0 to 2000 ft (0-610 m).
†. Required filter sizes shown are based on the larger of the AHRI (Air Conditioning Heating and Refrigeration Institute) rated cooling airflow or the heating airflow velocity of 300 to 350 ft/minute for throwaway type. Air filter pressure drop for non-standard filters must not exceed 0.08 IN. W.C.
‡. If using accessory filter rack refer to the filter rack installation instructions for correct filter sizes and quantity
NA - Not Available

Manufacturer reserves the right to change, at any time, specifications and designs without notice and without obligations.

Accessories

Description	Accessory Model Number	Used With
Roof Curb, 14-in. High	CPRFCURB011B00	24-30
	CPRFCURB013B00	36-60
Adapter curb	CPADCURB001A00	24-30
	CPADCURB002A00	36-60
Gasket Kit for existing roof curb with new base rail unit	CPGSKTKIT001A00	All
Economizer - Vertical, gear driven w/Filter Rack and 1-in. filter	CPECOMZR007B00	24-30
	CPECOMZR008A00	42
	CPECOMZR009A00	36, 48, 60
Economizer - Horizontal w/Filter Rack and 1-in. filter	CPECOMZR010B00	24-30
	CPECOMZR011B00	42
	CPECOMZR012B00	36, 48, 60
Outdoor Enthalpy Control	AXB078ENT*	All
Manual Outside Air Damper (Includes filter rack and 1-in. filter, same as CPFILTRK kit)	CPMANDPR007A00	24-30
	CPMANDPR008A00	42
	CPMANDPR009A00	36, 48, 60
Internal Filter Rack (includes 1−in. filters)	CPFILTRK007A00	24-30
	CPFILTRK008A00	42
	CPFILTRK009A00	36, 48, 60
240V Crankcase Heater	CPCRKHTR008A00	24-36, 208/230-1
	CPCRKHTR004A00	30 208/230-1, 42-60 208/230-1
Low Ambient Control	CPLOWAMB001A00	All
Five Minute Compressor Delay	NRTIMEGD001A00	All
PTC Compressor Start Assist Kit	CPHSTART002A00	All Single Phase
Flue Discharge Deflector Assembly	CPFLUEDS001A00	All
Square to Round (1 set of 2, use with horizontal duct flanges only)	CPDUC FLG002A00	24-48
Low Pressure Switch	CPLPSCTL001A00	24-60

*. Outdoor enthalpy available as field installed accessory; Filter rack and 1-in. filter, same as CPFILTRK kit

Unit Dimensions

24-30

COOLING CAPACITY	UNIT WT.		UNIT HEIGHT		CENTER OF GRAVITY IN/MM		
	LB	KG	"A"		X	Y	Z
24	328	148.8	43-3/4	1111	22-13/16	579.4	15-5/16	388.9	15-11/16	398.5
30	337	152.9	45-3/4	1162	22-13/16	579.4	15-5/16	388.9	15-13/16	401.6

UNIT	CORNER WEIGHT LB/KG				
	"1"	"2"	"3"	"4"	
24	49.0	22.3	66.0	29.8	98.0	44.6	115.0	52.1
30	51.0	22.9	67.0	30.6	101.0	45.9	118.0	53.5

REQUIRED CLEARANCES TO COMBUSTIBLE MATL.

	INCHES [MM]
TOP OF UNIT	14 [355.6]
DUCT SIDE OF UNIT	14 [355.6]
SIDE OPPOSITE DUCTS	14 [355.6]
BOTTOM OF UNIT	0 [0.0]
ELECTRICAL PANEL	36 [914.4]

NEC. REQUIRED CLEARANCES.

	INCHES [MM]
BETWEEN UNITS, POWER ENTRY SIDE	42 [1066.8]
UNIT AND UNGROUNDED SURFACES, POWER ENTRY SIDE	36 [914.0]
UNIT AND BLOCK OR CONCRETE WALLS AND OTHER GROUNDED SURFACES, POWER ENTRY SIDE	42 [1066.8]

REQUIRED CLEARANCE FOR OPERATION AND SERVICING

	INCHES [MM]
EVAP. COIL ACCESS SIDE	36 [914.0]
POWER ENTRY SIDE	42 [1066.8]
(EXCEPT AS FOR NEC REQUIREMENTS)	
UNIT TOP	48 [1219.2]
SIDE OPPOSITE DUCTS	36 [914.0]
DUCT PANEL	12 [304.8]*

*MINIMUM DISTANCES:IF UNIT IS PLACED LESS THAN 12 [304.8] FROM WALL SYSTEM,THEN SYSTEM PERFORMANCE MAYBE COMPROMISED.

DIMENSIONS IN [] ARE IN MILLIMETERS

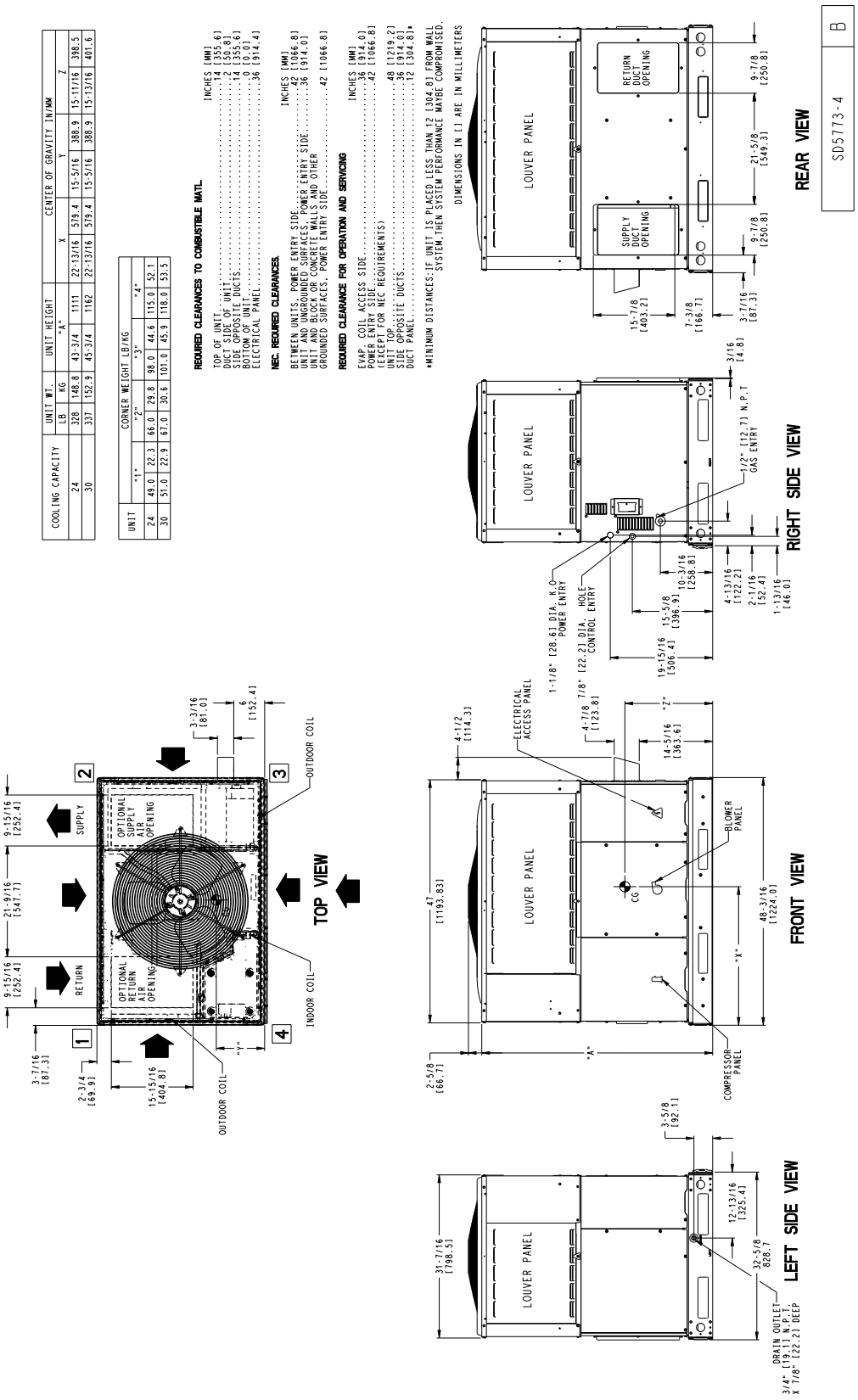

A230133

Unit Dimensions

36-60

COOLING CAPACITY	UNIT WT.		UNIT HEIGHT	CENTER OF GRAVITY IN/MM			
	LB	KG	"A"	X	Y	Z	
36	380	172.4	44-3/4	1137	22-13/16	579.4	18	457.2	17-1/8	435.0
42	414	187.8	44-3/4	1137	22-13/16	579.4	18	457.2	17-1/8	435.0
48	467	211.9	54-3/4	1391	22-13/16	579.4	18	457.2	17-5/8	447.7
60	481	218.2	48-3/4	1238	22-13/16	579.4	18	457.2	17-3/8	441.3

UNIT	CORNER WEIGHT LB/KG							
	"1"		"2"		"3"		"4"	
36	57.0	25.9	76.0	34.5	114.0	51.7	132.0	59.9
42	62.0	28.2	83.0	37.6	124.0	56.4	144.0	65.3
48	70.0	31.8	93.0	42.4	140.0	63.6	163.0	74.2
60	72.0	32.7	96.0	43.6	144.0	65.5	168.0	76.4

REQUIRED CLEARANCES TO COMBUSTIBLE MATL.

	INCHES [MM]
TOP OF UNIT	14 [355.6]
DUCT SIDE OF UNIT	14 [355.6]
SIDE OPPOSITE DUCTS	14 [355.6]
BOTTOM OF UNIT	0 [0.0]
ELECTRICAL PANEL	36 [914.4]

NEC. REQUIRED CLEARANCES.

	INCHES [MM]
BETWEEN UNITS, POWER ENTRY SIDE	42 [1066.8]
UNIT AND UNGROUNDED SURFACES, POWER ENTRY SIDE	36 [914.0]
UNIT AND BLOCK OR CONCRETE WALLS AND OTHER GROUNDED SURFACES, POWER ENTRY SIDE	42 [1066.8]

REQUIRED CLEARANCE FOR OPERATION AND SERVICING

	INCHES [MM]
EVAP. COIL ACCESS SIDE	36 [914.0]
POWER ENTRY SIDE (EXCEPT FOR NEC REQUIREMENTS)	42 [1066.8]
UNIT TOP	48 [1219.2]
SIDE OPPOSITE DUCTS	36 [914.0]
DUCT PANEL	12 [304.8]*

*MINIMUM DISTANCES:IF UNIT IS PLACED LESS THAN 12 [304.8] FROM WALL SYSTEM,THEN SYSTEM PERFORMANCE MAYBE COMPROMISED.

DIMENSIONS IN [] ARE IN MILLIMETERS

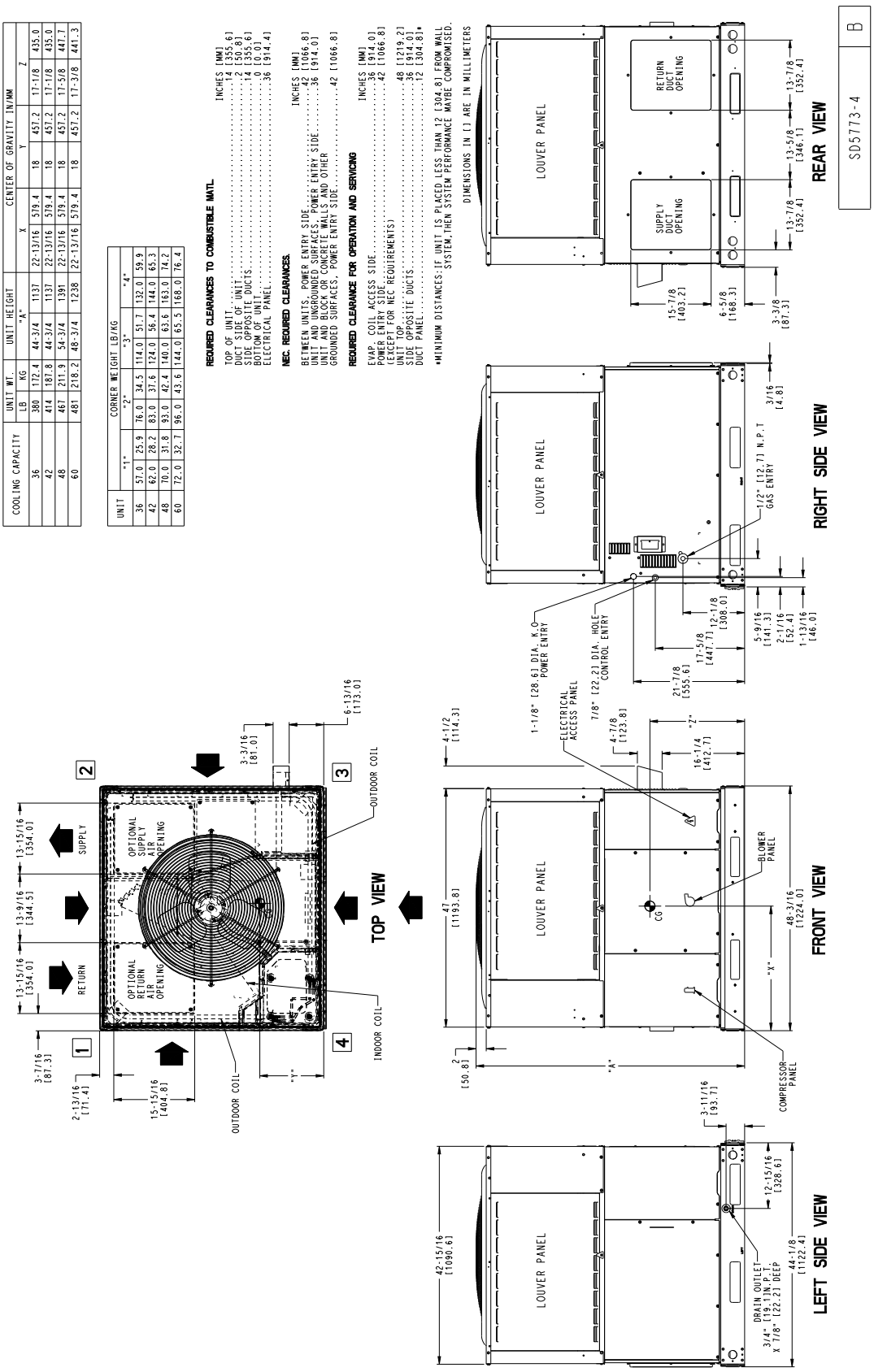

A230134

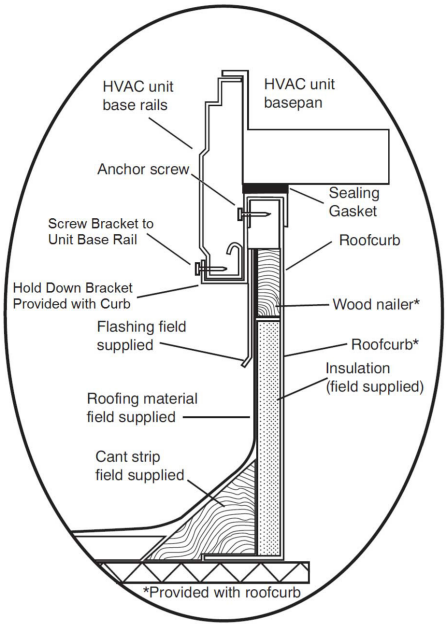

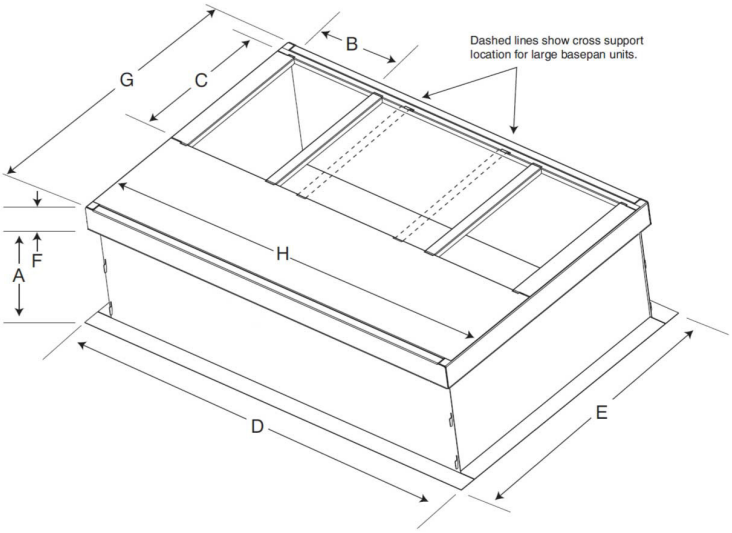

SMALL/COMMON CURB

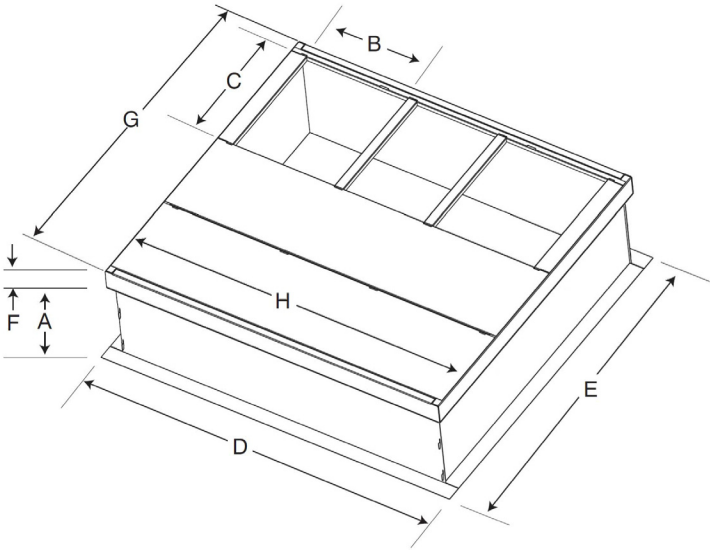

LARGE CURB

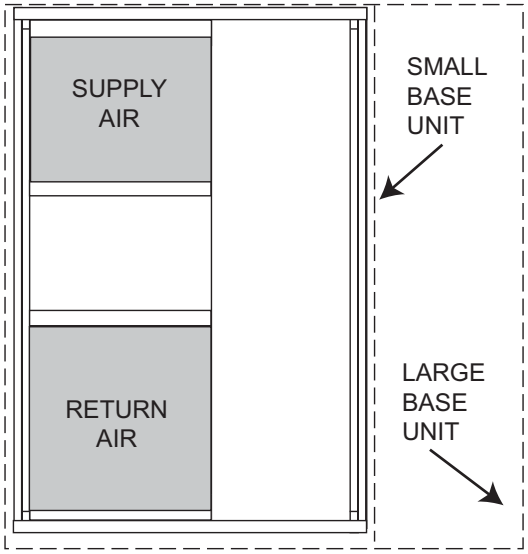

UNIT PLACEMENT ON COMMON CURB

SMALL OR LARGE BASE UNIT

A180216

Accessory Dimensions

Unit Size	Catalog Number	A IN. (mm)	B (small / common base) IN. (mm)*	B (large base) IN. (mm)*	C IN. (mm)	D IN. (mm)	E IN. (mm)	F IN. (mm)	G IN. (mm)	H IN. (mm)
Small or Large	CPRFCURB011B00	14 (356)	10 (254)	14 (356)	16 (406)	47.8 (1214)	32.4 (822)	2.7 (69)	30.6 (778)	46.1 (1170)
Large	CPRFCURB013B00	14 (356)	14 (356)				43.9 (1116)		42.2 (1072)	

* Part Number CPRCURB011B00 can be used on both small and large basepan units. The cross supports must be located based on whether the unit is a small basepan or a large basepan.

NOTES:

1. Roof curb must be set up for unit being installed.
2. Seal strip must be applied, as required, to unit being installed.
3. Roof curb is made of 16-gauge steel.
4. Attach ductwork to curb (flanges of duct rest on curb).
5. Insulated panels: 1-in. (25.4 mm) thick fiberglass 1 lb. density.

Manufacturer reserves the right to change, at any time, specifications and designs without notice and without obligations.

Selection Procedure (With Example)

DETERMINE COOLING AND HEATING REQUIREMENTS AT DESIGN CONDITIONS:

Given:

Required Cooling Capacity (TC) ..... 46,000 Btuh
Sensible Heat Capacity (SHC) ..... 34,000 Btuh
Required Heating Capacity ..... 72,000 Btuh
Condenser Entering Air Temperature ..... 95°F (35°C)
Indoor-Air Temperature ..... 80°F (27°C) edb 67°F (19°C) ewb
Evaporator Air Quantity ..... 1600 CFM
External Static Pressure ..... 0.440 IN. W.C.
Electrical Characteristics 208-1-60

SELECT UNIT BASED ON REQUIRED COOLING CAPACITY

Enter Net Cooling Capacities table at condenser entering temperature of 95°F (35°C). Unit 48 at 1600 CFM and 67°F (19°C) ewb (entering wet bulb) will provide a total capacity of 47,000 Btuh and a SHC of 35,000 Btuh. Calculate SHC correction, if required, using Note 4 under Cooling Capacities tables.

SELECT ELECTRIC HEAT

In the Gas Heating Capacities and Efficiencies table, note that the 48090 unit will provide 73,000 Btuh with an input of 89,000 Btuh.

DETERMINE FAN SPEED AND POWER REQUIREMENTS AT DESIGN CONDITIONS.

Before entering the air delivery tables, calculate the total static pressure required. From the given example, the Wet Coil Pressure Drop Table, and the Filter Pressure Drop Table:

External Static Pressure	0.30 IN. W.C
Filter	0.06 IN. W.C
Wet Coil Pressure Drop	0.07 IN. W.C
Total Static Pressure	0.43 IN. W.C

At 0.43 IN. W.C. ESP (external static pressure) and MED speed the motor delivers between 1664 CFM and 1627 cfm. Interpolation estimates 1653 CFM at .43 IN. W.C. Thus, MED delivers CFM needed.

SELECT UNIT THAT CORRESPONDS TO POWER SOURCE AVAILABLE.

The Electrical Data Table shows that the unit is designed to operate at 208-1-60.

Manufacturer reserves the right to change, at any time, specifications and designs without notice and without obligations.

Performance Data

24 Size

Evaporator Air		Condenser Entering Air Temperatures °F (°C)																	
		75 (23.9)			85 (29.4)			95 (35)			105 (40.6)			115 (46.1)			125 (51.7)		
CFM	EWB °F(°C)	Capacity MBtuh		Total Sys KW**	Capacity MBtuh		Total Sys KW**	Capacity MBtuh		Total Sys KW**	Capacity MBtuh		Total Sys KW**	Capacity MBtuh		Total Sys KW**	Capacity MBtuh		Total Sys KW**
		Total	Sens‡		Total	Sens‡		Total	Sens‡		Total	Sens‡		Total	Sens‡		Total	Sens‡	
700	57 (13.8)	23.62	23.62	1.55	21.90	21.90	1.75	20.07	20.07	1.95	17.88	17.88	2.14	15.87	15.87	2.38	14.01	14.01	2.64
	62 (16.6)	24.47	21.38	1.56	22.45	20.24	1.75	20.32	19.02	1.96	17.92	17.92	2.14	15.90	15.90	2.38	14.03	14.03	2.64
	63* (17.2)	24.99	17.43	1.56	22.88	16.39	1.76	20.71	15.32	1.96	18.05	14.06	2.15	15.56	12.87	2.36	13.28	11.77	2.61
	67 (19.4)	27.02	18.13	1.55	24.79	17.09	1.76	22.51	16.03	1.98	19.92	14.86	2.20	17.28	13.67	2.42	14.91	12.59	2.67
	72 (22.2)	29.59	14.70	1.55	27.20	13.77	1.76	24.84	12.86	1.99	22.48	11.95	2.24	19.68	10.89	2.51	17.14	9.92	2.77
800	57 (13.8)	24.74	24.74	1.57	22.92	22.92	1.77	21.02	21.02	1.99	18.78	18.78	2.19	16.65	16.65	2.42	14.70	14.70	2.69
	62 (16.6)	25.14	23.06	1.57	23.07	21.80	1.78	21.05	21.05	1.99	18.81	18.81	2.19	16.68	16.68	2.42	14.72	14.72	2.69
	63* (17.2)	25.59	18.60	1.57	23.43	17.53	1.77	21.18	16.43	1.99	18.51	15.14	2.18	15.93	13.90	2.39	13.61	12.73	2.64
	67 (19.4)	27.63	19.36	1.56	25.32	18.28	1.77	23.00	17.20	2.00	20.41	16.03	2.24	17.67	14.78	2.45	15.25	13.64	2.71
	72 (22.2)	30.16	15.42	1.56	27.69	14.48	1.77	25.27	13.55	2.01	22.88	12.64	2.26	20.12	11.62	2.53	17.47	10.60	2.80
900	57 (13.8)	25.69	25.69	1.58	23.77	23.77	1.79	21.80	21.80	2.01	19.55	19.55	2.23	17.32	17.32	2.46	15.29	15.29	2.73
	62 (16.6)	25.74	25.74	1.58	23.81	23.81	1.79	21.84	21.84	2.01	19.58	19.58	2.23	17.35	17.35	2.46	15.31	15.31	2.73
	63* (17.2)	26.07	19.72	1.58	23.84	18.62	1.79	21.55	17.49	2.01	18.84	16.17	2.20	16.24	14.87	2.42	13.92	13.92	2.67
	67 (19.4)	28.08	20.52	1.58	25.72	19.42	1.79	23.37	18.31	2.02	20.82	17.17	2.26	17.98	15.84	2.48	15.54	14.63	2.74
	72 (22.2)	30.58	16.10	1.58	28.07	15.15	1.79	25.58	14.21	2.02	23.17	13.29	2.28	20.45	12.30	2.56	17.73	11.25	2.83

Performance Data

30 Size

Evaporator Air		Condenser Entering Air Tempeatures °F (°C)														
		75 (23.9)			85 (29.4)			95 (35)			105 (40.6)			115 (46.1)		
CFM	EWB °F(°C)	Capacity MBtuh		Total Sys KW**	Capacity MBtuh		Total Sys KW**	Capacity MBtuh		Total Sys KW**	Capacity MBtuh		Total Sys KW**	Capacity MBtuh		Total Sys KW**
		Total	Sens‡		Total	Sens‡		Total	Sens‡		Total	Sens‡		Total	Sens‡	
875	57 (13.9)	27.39	27.39	1.98	26.29	26.29	2.20	25.01	25.01	2.44	23.52	23.52	2.69	21.57	21.57	2.94
	62 (16.7)	28.22	26.10	1.99	26.84	25.48	2.20	25.28	24.73	2.45	23.38	23.38	2.68	21.59	21.59	2.94
	63* (17.2)	28.70	21.18	1.99	27.33	20.58	2.20	25.77	19.89	2.45	23.74	19.00	2.69	21.18	17.90	2.93
	67 (19.4)	30.96	21.97	2.00	29.59	21.44	2.22	28.06	20.82	2.46	26.21	20.08	2.74	23.74	19.09	3.02
	71 (21.7)	33.22	18.60	2.02	31.86	18.10	2.24	30.33	17.53	2.48	28.62	16.90	2.76	26.55	16.13	3.08
1000	57 (13.9)	28.61	28.61	2.01	27.47	27.47	2.22	26.20	26.20	2.47	24.68	24.68	2.75	22.66	22.66	3.00
	62 (16.7)	28.93	28.00	2.01	27.59	27.35	2.23	26.34	26.18	2.47	24.72	24.72	2.75	22.70	22.70	3.00
	63* (17.2)	29.30	22.46	2.01	27.91	21.89	2.23	26.32	21.22	2.47	24.35	20.38	2.73	21.72	19.26	2.97
	67 (19.4)	31.55	23.29	2.03	30.16	22.79	2.24	28.60	22.20	2.49	26.76	21.49	2.77	24.30	20.55	3.06
	71 (21.7)	33.80	19.48	2.05	32.41	19.01	2.26	30.84	18.46	2.51	29.10	17.84	2.79	27.04	17.11	3.11
1125	57 (13.9)	29.58	29.58	2.03	28.44	28.44	2.25	27.15	27.15	2.50	25.62	25.62	2.78	23.61	23.61	3.06
	62 (16.7)	29.56	29.56	2.03	28.82	27.88	2.25	27.19	27.19	2.50	25.66	25.66	2.78	23.65	23.65	3.06
	63* (17.2)	29.76	23.65	2.04	28.33	23.11	2.25	26.76	22.46	2.50	24.80	21.66	2.77	22.16	20.54	3.01
	67 (19.4)	31.99	24.51	2.05	30.58	24.06	2.27	29.00	23.49	2.51	27.19	22.82	2.79	24.77	21.94	3.11
	71 (21.7)	34.23	20.29	2.07	32.81	19.85	2.29	31.24	19.31	2.54	29.45	18.71	2.82	27.39	18.01	3.13

Performance Data

36 Size

Evaporator Air		Condenser Entering Air Temperatures °F (°C)																	
		75 (23.9)			85 (29.4)			95 (35)			105 (40.6)			115 (46.1)			125 (51.7)		
CFM	EWB °F(°C)	Capacity MBtuh		Total Sys KW**	Capacity MBtuh		Total Sys KW**	Capacity MBtuh		Total Sys KW**	Capacity MBtuh		Total Sys KW**	Capacity MBtuh		Total Sys KW**	Capacity MBtuh		Total Sys KW**
		Total	Sens‡		Total	Sens‡		Total	Sens‡		Total	Sens‡		Total	Sens‡		Total	Sens‡	
1000	57 (13.8)	34.58	34.58	2.40	32.46	32.46	2.66	30.31	30.31	2.94	28.08	28.08	3.27	25.78	25.78	3.65	23.44	23.44	4.08
	62 (16.6)	36.10	31.44	2.41	33.65	29.92	2.67	31.16	28.38	2.95	28.62	26.75	3.27	26.05	25.03	3.65	23.48	23.48	4.08
	63* (17.2)	36.53	25.60	2.42	34.01	24.25	2.67	31.48	22.90	2.95	28.86	21.49	3.28	26.20	20.05	3.65	23.49	18.58	4.08
	67 (19.4)	39.44	26.70	2.43	36.74	25.34	2.69	34.00	23.95	2.97	31.20	22.53	3.30	28.34	21.07	3.67	25.45	19.58	4.09
	72 (22.2)	43.05	21.95	2.46	40.11	20.71	2.72	37.12	19.45	3.00	34.07	18.16	3.32	30.95	16.85	3.69	27.81	15.51	4.11
1150	57 (13.8)	36.19	36.19	2.46	33.98	33.98	2.71	31.67	31.67	3.00	29.30	29.30	3.32	26.84	26.84	3.70	24.34	24.34	4.12
	62 (16.6)	37.15	33.84	2.46	34.60	32.19	2.72	32.03	30.46	3.00	29.42	29.41	3.32	26.90	26.90	3.70	24.38	24.38	4.12
	63* (17.2)	37.52	27.28	2.47	34.89	25.86	2.72	32.23	24.43	3.01	29.50	22.95	3.33	26.72	21.43	3.70	23.92	19.88	4.12
	67 (19.4)	40.47	28.51	2.48	37.67	27.07	2.74	34.80	25.60	3.03	31.88	24.11	3.35	28.91	22.56	3.72	25.90	20.99	4.14
	72 (22.2)	44.12	23.06	2.51	41.04	21.76	2.77	37.93	20.44	3.06	34.77	19.10	3.38	31.54	17.73	3.74	28.28	16.32	4.16
1300	57 (13.8)	37.56	37.56	2.51	35.24	35.24	2.77	32.79	32.79	3.05	30.30	30.30	3.38	27.71	27.71	3.75	25.08	25.08	4.17
	62 (16.6)	38.06	35.99	2.51	35.47	34.14	2.77	32.84	32.84	3.05	30.34	30.34	3.38	27.75	27.75	3.75	25.12	25.12	4.17
	63* (17.2)	38.23	28.87	2.51	35.57	27.41	2.77	32.80	25.90	3.05	29.99	24.35	3.38	27.14	22.76	3.75	24.25	21.11	4.17
	67 (19.4)	41.26	30.24	2.53	38.33	28.73	2.79	35.38	27.20	3.08	32.36	25.62	3.40	29.31	24.01	3.76	26.22	22.34	4.18
	72 (22.2)	44.94	24.09	2.56	41.77	22.75	2.82	38.55	21.38	3.11	35.28	19.98	3.43	31.96	18.56	3.79	28.62	17.10	4.21

Manufacturer reserves the right to change, at any time, specifications and designs without notice and without obligations.

Performance Data

42 Size

Evaporator Air		Condenser Entering Air Temperatures °F (°C)																	
		75 (23.9)			85 (29.4)			95 (35)			105 (40.6)			115 (46.1)			125 (51.7)		
CFM	EWB °F(°C)	Capacity MBtuh		Total Sys KW**	Capacity MBtuh		Total Sys KW**	Capacity MBtuh		Total Sys KW**	Capacity MBtuh		Total Sys KW**	Capacity MBtuh		Total Sys KW**	Capacity MBtuh		Total Sys KW**
		Total	Sens‡		Total	Sens‡		Total	Sens‡		Total	Sens‡		Total	Sens‡		Total	Sens‡	
1175	57 (13.8)	38.66	38.66	2.51	36.66	36.66	2.87	34.60	34.60	3.30	32.45	32.45	3.80	30.07	30.07	4.39	27.19	27.19	5.02
	62 (16.6)	40.29	35.16	2.54	37.87	33.90	2.90	35.39	32.59	3.32	32.82	31.18	3.82	30.12	30.12	4.39	27.24	27.24	5.03
	63* (17.2)	41.08	28.70	2.54	38.62	27.55	2.92	36.06	26.34	3.34	33.40	25.10	3.84	30.40	23.73	4.40	26.65	22.06	4.98
	67 (19.4)	44.34	29.79	2.59	41.80	28.66	2.97	39.16	27.52	3.42	36.41	26.33	3.95	33.45	25.06	4.57	29.97	23.59	5.21
	72 (22.2)	48.52	24.17	2.66	45.92	23.18	3.05	43.20	22.16	3.52	40.37	21.10	4.06	37.44	20.00	4.70	34.27	18.84	5.44
1350	57 (13.8)	40.50	40.50	2.58	38.39	38.39	2.95	36.24	36.24	3.40	34.01	34.01	3.92	31.54	31.54	4.51	28.67	28.67	5.17
	62 (16.6)	41.38	37.85	2.59	38.93	36.52	2.96	36.44	36.11	3.41	34.06	34.06	3.92	31.59	31.59	4.52	28.72	28.72	5.17
	63* (17.2)	42.06	30.61	2.60	39.52	29.42	2.97	36.90	28.24	3.41	34.16	26.96	3.92	31.10	25.56	4.49	27.35	23.86	5.08
	67 (19.4)	45.33	31.78	2.64	42.72	30.67	3.03	40.00	29.50	3.48	37.18	28.29	4.01	34.18	27.02	4.64	30.76	25.56	5.32
	72 (22.2)	49.45	25.33	2.72	46.79	24.36	3.12	44.00	23.33	3.58	41.11	22.27	4.13	38.09	21.17	4.78	34.91	20.01	5.52
1525	57 (13.8)	41.99	41.99	2.63	39.82	39.82	3.02	37.59	37.59	3.47	35.28	35.28	4.01	32.78	32.78	4.63	29.92	29.92	5.31
	62 (16.6)	42.32	40.26	2.64	39.90	39.90	3.02	37.64	37.64	3.47	35.33	35.33	4.01	32.82	32.82	4.64	29.97	29.97	5.31
	63* (17.2)	42.81	32.42	2.65	40.22	31.23	3.02	37.53	30.01	3.47	34.76	28.74	3.99	31.66	27.29	4.56	27.97	25.57	5.17
	67 (19.4)	46.08	33.66	2.70	43.40	32.57	3.08	40.64	31.35	3.54	37.75	30.14	4.07	34.73	28.86	4.70	31.38	27.42	5.42
	72 (22.2)	50.14	26.41	2.78	47.44	25.44	3.18	44.60	24.44	3.64	41.64	23.37	4.20	38.57	22.27	4.85	35.35	21.11	5.59

Manufacturer reserves the right to change, at any time, specifications and designs without notice and without obligations.

Performance Data

48 Size

Evaporator Air		Condenser Entering Air Temperatures °F (°C)																	
		75 (23.9)			85 (29.4)			95 (35)			105 (40.6)			115 (46.1)			125 (51.7)		
CFM	EWB °F(°C)	Capacity MBtuh		Total Sys KW**	Capacity MBtuh		Total Sys KW**	Capacity MBtuh		Total Sys KW**	Capacity MBtuh		Total Sys KW**	Capacity MBtuh		Total Sys KW**	Capacity MBtuh		Total Sys KW**
		Total	Sens‡		Total	Sens‡		Total	Sens‡		Total	Sens‡		Total	Sens‡		Total	Sens‡	
1400	57 (13.8)	45.45	45.45	3.10	42.83	42.83	3.46	40.16	40.16	3.89	37.26	37.26	4.36	33.52	33.52	4.82	29.80	29.80	5.37
	62 (16.6)	47.27	42.17	3.13	44.15	40.29	3.49	41.03	38.39	3.91	37.61	36.29	4.36	33.57	33.57	4.83	29.84	29.84	5.37
	63* (17.2)	48.20	34.32	3.13	45.02	32.66	3.50	41.76	30.98	3.92	38.24	29.20	4.38	33.54	26.93	4.82	28.81	24.65	5.33
	67 (19.4)	52.06	35.63	3.15	48.74	34.02	3.52	45.33	32.35	3.95	41.77	30.64	4.44	37.35	28.63	4.96	32.39	26.38	5.46
	72 (22.2)	56.98	28.79	3.18	53.50	27.36	3.56	49.89	25.89	3.99	46.16	24.36	4.48	42.23	22.80	5.04	37.37	21.00	5.64
1550	57 (13.8)	47.02	47.02	3.17	44.27	44.27	3.54	41.50	41.50	3.96	38.53	38.53	4.44	34.79	34.79	4.92	30.91	30.91	5.46
	62 (16.6)	48.16	44.46	3.17	45.01	42.51	3.55	41.85	40.45	3.97	38.60	38.60	4.44	34.83	34.83	4.92	30.95	30.95	5.46
	63* (17.2)	49.02	35.96	3.18	45.75	34.27	3.55	42.41	32.55	3.98	38.87	30.75	4.45	34.15	28.45	4.89	29.32	26.09	5.40
	67 (19.4)	52.88	37.35	3.20	49.49	35.71	3.57	46.00	34.00	4.00	42.38	32.25	4.49	38.03	30.31	5.04	32.93	27.95	5.53
	72 (22.2)	57.73	29.76	3.23	54.20	28.31	3.61	50.51	26.84	4.04	46.68	25.28	4.53	42.70	23.71	5.09	37.92	21.96	5.70
1800	57 (13.8)	49.14	49.14	3.25	46.25	46.25	3.63	43.34	43.34	4.06	40.29	40.29	4.55	36.55	36.55	5.07	32.46	32.46	5.60
	62 (16.6)	49.49	47.88	3.25	46.34	46.34	3.63	43.39	43.39	4.06	40.34	40.34	4.55	36.60	36.60	5.07	32.49	32.49	5.61
	63* (17.2)	50.04	38.56	3.25	46.70	36.84	3.63	43.27	35.06	4.06	39.66	33.20	4.54	34.96	30.85	5.00	30.05	28.30	5.51
	67 (19.4)	53.94	40.13	3.28	50.43	38.42	3.65	46.85	36.63	4.08	43.16	34.80	4.57	38.95	32.92	5.12	33.66	30.41	5.65
	72 (22.2)	58.67	31.28	3.31	55.06	29.83	3.69	51.26	28.32	4.12	47.34	26.73	4.62	43.27	25.12	5.18	38.61	23.50	5.78

Manufacturer reserves the right to change, at any time, specifications and designs without notice and without obligations.

Performance Data

60 Size

Evaporator Air		Condenser Entering Air Temperatures °F (°C)																	
		75 (23.9)			85 (29.4)			95 (35)			105 (40.6)			115 (46.1)			125 (51.7)		
CFM	EWB °F(°C)	Capacity MBtuh		Total Sys KW**	Capacity MBtuh		Total Sys KW**	Capacity MBtuh		Total Sys KW**	Capacity MBtuh		Total Sys KW**	Capacity MBtuh		Total Sys KW**	Capacity MBtuh		Total Sys KW**
		Total	Sens‡		Total	Sens‡		Total	Sens‡		Total	Sens‡		Total	Sens‡		Total	Sens‡	
1750	57 (13.8)	57.04	57.04	3.68	53.71	53.71	4.20	50.37	50.37	4.81	46.94	46.94	5.51	42.94	42.94	6.27	38.22	38.22	7.08
	62 (16.6)	58.59	49.98	3.70	54.72	48.26	4.22	50.83	46.41	4.82	47.02	47.02	5.51	43.00	43.00	6.28	38.29	38.29	7.08
	63* (17.2)	59.69	40.44	3.70	55.67	38.90	4.23	51.62	37.32	4.83	47.50	35.70	5.52	42.48	33.69	6.25	36.58	31.27	7.00
	67 (19.4)	64.43	42.04	3.73	60.26	40.56	4.26	56.00	39.00	4.87	51.67	37.39	5.57	47.05	35.71	6.38	41.05	33.47	7.21
	72 (22.2)	70.39	33.58	3.78	66.06	32.25	4.31	61.55	30.87	4.93	56.94	29.39	5.64	52.21	27.88	6.45	47.19	26.29	7.37
2000	57 (13.8)	59.44	59.44	3.78	55.93	55.93	4.31	52.41	52.41	4.92	48.83	48.83	5.62	44.92	44.92	6.44	39.97	39.97	7.26
	62 (16.6)	60.04	53.50	3.78	56.07	56.07	4.31	52.48	52.48	4.92	48.90	48.90	5.62	44.98	44.98	6.44	40.04	40.04	7.26
	63* (17.2)	60.84	43.04	3.78	56.74	41.49	4.31	52.56	39.87	4.92	48.32	38.18	5.62	43.48	36.25	6.39	37.36	33.66	7.13
	67 (19.4)	65.61	44.79	3.81	61.36	43.29	4.34	56.95	41.68	4.96	52.51	40.02	5.66	47.83	38.30	6.47	41.86	36.09	7.35
	72 (22.2)	71.45	35.11	3.87	67.02	33.78	4.40	62.40	32.37	5.02	57.67	30.89	5.73	52.81	29.36	6.55	47.75	27.77	7.47
2250	57 (13.8)	61.37	61.37	3.86	57.76	57.76	4.39	54.09	54.09	5.01	50.36	50.36	5.72	46.38	46.38	6.54	41.44	41.44	7.43
	62 (16.6)	61.42	61.42	3.86	57.83	57.83	4.40	54.15	54.15	5.01	50.42	50.42	5.72	46.44	46.44	6.54	41.51	41.51	7.43
	63* (17.2)	61.75	45.60	3.86	57.57	43.99	4.39	53.29	42.29	5.00	48.99	40.55	5.71	44.27	38.64	6.52	38.08	35.80	7.26
	67 (19.4)	66.46	47.42	3.89	62.10	45.93	4.43	57.67	44.25	5.04	53.13	42.53	5.75	48.44	40.74	6.56	42.58	38.56	7.48
	72 (22.2)	72.23	36.56	3.95	67.73	35.23	4.48	63.02	33.84	5.11	58.17	32.33	5.82	53.23	30.78	6.65	48.12	29.19	7.57

Manufacturer reserves the right to change, at any time, specifications and designs without notice and without obligations.

Performance Data

* At 75°F (24°C) entering dry bulb-Tennessee Valley Authority (TVA) rating conditions; all others at 80°F dry bulb.
‡ Sensible capacities shown are based on 80°F (27°C) entering air at the indoor coil. For sensible capacities at other than 80°F (27°C), deduct 835 Btuh (245 kW) per 1000 CFM (480 L/S) of indoor coil air for each degree below 80°F (27°C), or add 835 Btuh (245 kW) per 1000 CFM (480 L/S) of indoor coil air per degree above 80°F (27°C).
** System KW is total of indoor and outdoor unit kilowatts.
LEGEND
BF— Bypass Factor
edb— Entering Dry---Bulb
Ewb— Entering Wet---Bulb
kW — Total Unit Power Input
SHC— Sensible Heat Capacity (1000 Btuh)
TC — Total Capacity (1000 Btuh) (net)
rh—Relative Humidity
COOLING NOTES:
1. Ratings are net; they account for the effects of the evaporator ---fan motor power and heat.
2. Direct interpolation is permissible. Do not extrapolate.
3. The following formulas may be used:

4. The SHC is based on 80°F (26.6°C) edb temperature of air enteringevaporator coil. Below 80°F (26.6°C) edb, subtract (corr factor x cfm) from SHC.
Above 80°F (26.6°C) edb, add (corr factor x cfm) to SHC.
Correction Factor = 1.10 x (1 + BF) x (edb --- 80).
5. Integrated capacity is maximum (instantaneous) capacity less the effect of frost on the outdoor coil and the heat required to defrost it.

Manufacturer reserves the right to change, at any time, specifications and designs without notice and without obligations.

Gas Adjustment

Natural Gas Orifice Sizes and Manifold Pressure - Single and Three Phase Models

Nameplate Input (Btu/hr)		Altitude of Installation (FT. Above Sea Level) U.S.A.*
		0 to 2000 (0-610 m)
45,000	Orifice No. (Qty)	0.125-in.
	Manifold Press. (in. W.C.)	3.2~3.8
60,000	Orifice No. (Qty)	28 (1)
	Manifold Press. (in. W.C.)	3.2~3.8
89,000	Orifice No. (Qty)	18 (1)
	Manifold Press. (in. W.C.)	3.2~3.8

*. Altitude of 2001ft and above is not allowed.

Manufacturer reserves the right to change, at any time, specifications and designs without notice and without obligations.

Dry Coil Air Delivery* - Horizontal and Downflow Discharge Sizes 24-60

Unit Size	Heating Rise °F (°C)	Motor Speed	Tap	Allowable Functions		ESP (in. W.C.)									
						0.1	0.2	0.3	0.4	0.5	0.6	0.7	0.8	0.9	1
24040	25 - 55 (14 - 31)	Low†	Blue	Alternate Heating	CFM	640	553	454	310	---	---	---	---	---	---
					BHP	0.07	0.08	0.08	0.09	---	---	---	---	---	---
					Gas Heat Rise (°F)	52	NA	NA	NA	NA	NA	NA	NA	NA	NA
					Gas Heat Rise (°C)	29	NA	NA	NA	NA	NA	NA	NA	NA	NA
		Med-Low‡	Pink	Heating Alternate Cooling	CFM	830	758	688	607	514	393	254	---	---	---
					BHP	0.12	0.13	0.13	0.13	0.14	0.14	0.15	---	---	---
					Gas Heat Rise (°F)	40	44	49	55	NA	NA	NA	NA	NA	NA
					Gas Heat Rise (°C)	22	25	27	31	NA	NA	NA	NA	NA	NA
		Medium**	Red	Cooling Alternate Heating	CFM	1080	1025	969	910	852	787	718	638	541	457
					BHP	0.21	0.22	0.23	0.23	0.24	0.24	0.25	0.25	0.26	0.27
					Gas Heat Rise (°F)	31	33	35	37	39	43	47	52	NA	NA
					Gas Heat Rise (°C)	17	18	19	20	22	24	26	29	NA	NA
		Med-High	Orange	Alternate Cooling Alternate Heating	CFM	1101	1046	993	936	878	816	749	676	599	498
					BHP	0.22	0.23	0.24	0.24	0.25	0.26	0.26	0.27	0.27	0.28
					Gas Heat Rise (°F)	30	32	34	36	38	41	45	50	NA	NA
					Gas Heat Rise (°C)	17	18	19	20	21	23	25	28	NA	NA
		High	Black	High Static Cooling Only	CFM	1222	1173	1123	1072	1021	967	912	853	787	712
					BHP	0.29	0.29	0.30	0.31	0.31	0.32	0.33	0.34	0.34	0.34
24060	25 - 55 (14 - 31)	Low†	Blue		CFM	640	553	454	310	---	---	---	---	---	---
					BHP	0.07	0.08	0.08	0.09	---	---	---	---	---	---
					Gas Heat Rise (°F)	NA	NA	NA	NA	NA	NA	NA	NA	NA	NA
					Gas Heat Rise (°C)	NA	NA	NA	NA	NA	NA	NA	NA	NA	NA
		Med-Low	Pink	Alternate Cooling Alternate Heating	CFM	830	758	688	607	514	393	254	---	---	---
					BHP	0.12	0.13	0.13	0.13	0.14	0.14	0.15	---	---	---
					Gas Heat Rise (°F)	54	NA	NA	NA	NA	NA	NA	NA	NA	NA
					Gas Heat Rise (°C)	30	NA	NA	NA	NA	NA	NA	NA	NA	NA
		Medium**	Red	Cooling Alternate Heating	CFM	1080	1025	969	910	852	787	718	638	541	457
					BHP	0.21	0.22	0.23	0.23	0.24	0.24	0.25	0.25	0.26	0.27
					Gas Heat Rise (°F)	41	44	46	49	52	NA	NA	NA	NA	NA
					Gas Heat Rise (°C)	23	24	26	27	29	NA	NA	NA	NA	NA
		Med-High‡	Orange	Heating Alternate Cooling	CFM	1101	1046	993	936	878	816	749	676	599	498
					BHP	0.22	0.23	0.24	0.24	0.25	0.26	0.26	0.27	0.27	0.28
					Gas Heat Rise (°F)	41	43	45	48	51	55	NA	NA	NA	NA
					Gas Heat Rise (°C)	23	24	25	26	28	30	NA	NA	NA	NA
		High	Black	High Static Cooling Only	CFM	1222	1173	1123	1072	1021	967	912	853	787	712
					BHP	0.29	0.29	0.30	0.31	0.31	0.32	0.33	0.34	0.34	0.34

Manufacturer reserves the right to change, at any time, specifications and designs without notice and without obligations.

Dry Coil Air Delivery* - Horizontal and Downflow Discharge Sizes 24-60

Unit Size	Heating Rise °F (°C)	Motor Speed	Tap	Allowable Functions		ESP (in. W.C.)									
						0.1	0.2	0.3	0.4	0.5	0.6	0.7	0.8	0.9	1
30040	25 - 55 (14 - 31)	Low†	Blue	Alternate Heating	CFM	643	552	455	348	225	---	---	---	---	---
					BHP	0.09	0.10	0.11	0.11	0.11	---	---	---	---	---
					Gas Heat Rise (°F)	52	NA	NA	NA	NA	NA	NA	NA	NA	NA
					Gas Heat Rise (°C)	29	NA	NA	NA	NA	NA	NA	NA	NA	NA
		Med-Low‡	Pink	Heating Alternate Cooling	CFM	817	744	673	597	516	431	325	190	---	---
					BHP	0.14	0.15	0.15	0.16	0.17	0.17	0.18	0.18	---	---
					Gas Heat Rise (°F)	41	45	50	NA	NA	NA	NA	NA	NA	NA
					Gas Heat Rise (°C)	23	25	28	NA	NA	NA	NA	NA	NA	NA
		Medium	Red	Alternate Cooling Alternate Heating	CFM	1159	1104	1045	990	937	878	821	759	693	618
					BHP	0.31	0.32	0.33	0.33	0.34	0.35	0.36	0.37	0.37	0.38
					Gas Heat Rise (°F)	29	30	32	34	36	38	41	44	48	54
					Gas Heat Rise (°C)	16	17	18	19	20	21	23	25	27	30
		Med-High**	Orange	Cooling Alternate Heating	CFM	1201	1147	1095	1037	987	934	877	818	755	671
					BHP	0.34	0.35	0.36	0.37	0.37	0.38	0.39	0.40	0.41	0.40
					Gas Heat Rise (°F)	28	29	31	32	34	36	38	41	44	50
					Gas Heat Rise (°C)	15	16	17	18	19	20	21	23	25	28
		High	Black	High Static Cooling Only	CFM	1291	1236	1181	1131	1080	1033	978	909	792	661
					BHP	0.41	0.42	0.43	0.43	0.44	0.45	0.46	0.45	0.43	0.40
30060	25 - 55 (14 - 31)	Low†	Blue		CFM	643	552	455	348	225	---	---	---	---	---
					BHP	0.09	0.10	0.11	0.11	0.11	---	---	---	---	---
					Gas Heat Rise (°F)	NA	NA	NA	NA	NA	NA	NA	NA	NA	NA
					Gas Heat Rise (°C)	NA	NA	NA	NA	NA	NA	NA	NA	NA	NA
		Med-Low	Pink	Alternate Cooling Alternate Heating	CFM	817	744	673	597	516	431	325	190	---	---
					BHP	0.14	0.15	0.15	0.16	0.17	0.17	0.18	0.18	---	---
					Gas Heat Rise (°F)	55	NA	NA	NA	NA	NA	NA	NA	NA	NA
					Gas Heat Rise (°C)	30	NA	NA	NA	NA	NA	NA	NA	NA	NA
		Medium‡	Red	Heating Alternate Cooling	CFM	1159	1104	1045	990	937	878	821	759	693	618
					BHP	0.31	0.32	0.33	0.33	0.34	0.35	0.36	0.37	0.37	0.38
					Gas Heat Rise (°F)	39	40	43	45	48	51	54	NA	NA	NA
					Gas Heat Rise (°C)	21	22	24	25	26	28	30	NA	NA	NA
		Medium-High**	Orange	Cooling Alternate Heating	CFM	1201	1147	1095	1037	987	934	877	818	755	671
					BHP	0.34	0.35	0.36	0.37	0.37	0.38	0.39	0.40	0.41	0.40
					Gas Heat Rise (°F)	37	39	41	43	45	48	51	55	NA	NA
					Gas Heat Rise (°C)	21	22	23	24	25	27	28	30	NA	NA
		High	Black	High Static Cooling Only	CFM	1291	1236	1181	1131	1080	1033	978	909	792	661
					BHP	0.41	0.42	0.43	0.43	0.44	0.45	0.46	0.45	0.43	0.40

Manufacturer reserves the right to change, at any time, specifications and designs without notice and without obligations.

Dry Coil Air Delivery* - Horizontal and Downflow Discharge Sizes 24-60

Unit Size	Heating Rise °F (°C)	Motor Speed	Tap	Allowable Functions		ESP (in. W.C.)									
						0.1	0.2	0.3	0.4	0.5	0.6	0.7	0.8	0.9	1
36060	25 - 55 (14 - 31)	Low†	Blue	Alternate Cooling, Alternate Gas Heating	CFM	1096	1044	994	945	892	837	780	717	664	612
					BHP	0.14	0.15	0.16	0.18	0.19	0.19	0.20	0.21	0.22	0.23
					Gas Heat Rise (°F)	41	43	45	47	50	53	NA	NA	NA	NA
					Gas Heat Rise (°C)	23	24	25	26	28	30	NA	NA	NA	NA
		Med-Low‡	Pink	Heating, Alternate Cooling	CFM	1151	1103	1056	1002	953	897	845	788	729	678
					BHP	0.16	0.17	0.18	0.19	0.20	0.21	0.22	0.23	0.24	0.25
					Gas Heat Rise (°F)	39	40	42	45	47	50	53	NA	NA	NA
					Gas Heat Rise (°C)	22	22	23	25	26	28	29	NA	NA	NA
		Medium	Red	Alternate Cooling, Alternate Gas Heating	CFM	1299	1252	1204	1155	1106	1059	1007	959	905	844
					BHP	0.22	0.23	0.24	0.25	0.26	0.27	0.28	0.29	0.30	0.31
					Gas Heat Rise (°F)	34	36	37	39	40	42	44	47	49	53
					Gas Heat Rise (°C)	19	20	21	21	22	23	25	26	27	29
		Med-High**	Orange	Cooling, Alternate Gas Heating	CFM	1382	1335	1292	1246	1202	1152	1106	1058	1007	957
					BHP	0.26	0.27	0.28	0.29	0.30	0.31	0.32	0.33	0.34	0.35
					Gas Heat Rise (°F)	32	33	35	36	37	39	40	42	44	47
					Gas Heat Rise (°C)	18	19	19	20	21	22	22	23	25	26
		High	Black	High Static Cooling Only	CFM	1530	1485	1442	1398	1354	1309	1263	1217	1169	1120
					BHP	0.33	0.35	0.36	0.37	0.38	0.39	0.40	0.41	0.42	0.43
42060	25 - 55 (14 - 31)	Low†	Blue	Alternate Heating	CFM	956	899	843	786	729	676	621	558	504	435
					BHP	0.13	0.13	0.14	0.15	0.16	0.16	0.17	0.18	0.18	0.19
					Gas Heat Rise (°F)	47	50	53	NA	NA	NA	NA	NA	NA	NA
					Gas Heat Rise (°C)	26	28	29	NA	NA	NA	NA	NA	NA	NA
		Med-Low‡	Pink	Heating Alternate Cooling	CFM	1201	1153	1107	1060	1012	965	917	871	828	782
					BHP	0.21	0.22	0.22	0.23	0.24	0.25	0.26	0.27	0.28	0.29
					Gas Heat Rise (°F)	37	39	40	42	44	46	49	51	54	NA
					Gas Heat Rise (°C)	21	22	22	23	25	26	27	28	30	NA
		Medium	Red	Alternate Cooling Alternate Heating	CFM	1443	1402	1361	1322	1284	1243	1204	1164	1124	1084
					BHP	0.32	0.33	0.34	0.35	0.36	0.37	0.38	0.39	0.40	0.42
					Gas Heat Rise (°F)	31	32	33	34	35	36	37	38	40	41
					Gas Heat Rise (°C)	17	18	18	19	19	20	21	21	22	23
		Med-High**	Orange	Cooling Alternate Heating	CFM	1529	1491	1451	1411	1376	1338	1300	1261	1223	1185
					BHP	0.37	0.39	0.40	0.41	0.42	0.43	0.44	0.45	0.46	0.47
					Gas Heat Rise (°F)	29	30	31	32	32	33	34	35	36	38
					Gas Heat Rise (°C)	16	17	17	18	18	19	19	20	20	21
		High	Black	High Static Cooling Only	CFM	1604	1565	1529	1490	1455	1421	1385	1348	1310	1274
					BHP	0.42	0.44	0.45	0.46	0.47	0.48	0.49	0.50	0.51	0.52

Manufacturer reserves the right to change, at any time, specifications and designs without notice and without obligations.

Dry Coil Air Delivery* - Horizontal and Downflow Discharge Sizes 24-60

Unit Size	Heating Rise °F (°C)	Motor Speed	Tap	Allowable Functions		ESP (in. W.C.)									
						0.1	0.2	0.3	0.4	0.5	0.6	0.7	0.8	0.9	1
42090	35 - 65 (19 - 36)	Low†	Blue		CFM	956	899	843	786	729	676	621	558	504	435
					BHP	0.13	0.13	0.14	0.15	0.16	0.16	0.17	0.18	0.18	0.19
					Gas Heat Rise (°F)	NA	NA	NA	NA	NA	NA	NA	NA	NA	NA
					Gas Heat Rise (°C)	NA	NA	NA	NA	NA	NA	NA	NA	NA	NA
		Med-Low	Pink	Alternate Cooling Alternate Heating	CFM	1201	1153	1107	1060	1012	965	917	871	828	782
					BHP	0.21	0.22	0.22	0.23	0.24	0.25	0.26	0.27	0.28	0.29
					Gas Heat Rise (°F)	56	58	60	63	NA	NA	NA	NA	NA	NA
					Gas Heat Rise (°C)	31	32	34	35	NA	NA	NA	NA	NA	NA
		Medium‡	Red	Heating Alternate Cooling	CFM	1443	1402	1361	1322	1284	1243	1204	1164	1124	1084
					BHP	0.32	0.33	0.34	0.35	0.36	0.37	0.38	0.39	0.40	0.42
					Gas Heat Rise (°F)	46	48	49	51	52	54	56	58	60	62
					Gas Heat Rise (°C)	26	27	27	28	29	30	31	32	33	34
		Med-High**	Orange	Cooling Alternate Heating	CFM	1529	1491	1451	1411	1376	1338	1300	1261	1223	1185
					BHP	0.37	0.39	0.40	0.41	0.42	0.43	0.44	0.45	0.46	0.47
					Gas Heat Rise (°F)	44	45	46	47	49	50	52	53	55	57
					Gas Heat Rise (°C)	24	25	26	26	27	28	29	29	30	31
		High	Black	High Static Cooling Only	CFM	1604	1565	1529	1490	1455	1421	1385	1348	1310	1274
					BHP	0.42	0.44	0.45	0.46	0.47	0.48	0.49	0.50	0.51	0.52
48090	35 - 65 (19 - 36)	Low†	Blue		CFM	641	551	462	385	289	216	163	115	---	---
					BHP	0.05	0.06	0.06	0.07	0.07	0.08	0.08	0.09	---	---
					Gas Heat Rise (°F)	NA	NA	NA	NA	NA	NA	NA	NA	NA	NA
					Gas Heat Rise (°C)	NA	NA	NA	NA	NA	NA	NA	NA	NA	NA
		Med-Low‡	Pink	Heating Alternate Cooling	CFM	1437	1395	1351	1307	1265	1221	1176	1132	1084	1039
					BHP	0.29	0.30	0.31	0.32	0.33	0.34	0.35	0.36	0.37	0.38
					Gas Heat Rise (°F)	47	48	50	51	53	55	57	59	62	64
					Gas Heat Rise (°C)	26	27	28	28	29	30	32	33	34	36
		Medium**	Red	Cooling	CFM	1771	1735	1699	1664	1627	1592	1557	1522	1486	1450
					BHP	0.51	0.52	0.53	0.55	0.56	0.57	0.58	0.59	0.61	0.62
					Gas Heat Rise (°F)	NA	NA	NA	NA	NA	NA	NA	NA	NA	NA
					Gas Heat Rise (°C)	NA	NA	NA	NA	NA	NA	NA	NA	NA	NA
		Med-High	Orange	Alternate Cooling	CFM	1928	1897	1862	1830	1796	1764	1732	1698	1620	1512
					BHP	0.64	0.65	0.67	0.68	0.69	0.71	0.72	0.73	0.71	0.66
					Gas Heat Rise (°F)	NA	NA	NA	NA	NA	NA	NA	NA	NA	NA
					Gas Heat Rise (°C)	NA	NA	NA	NA	NA	NA	NA	NA	NA	NA
		High	Black	High Static Cooling Only	CFM	2212	2167	2124	2061	1976	1892	1794	1699	1567	1438
					BHP	0.97	0.99	1.00	0.97	0.95	0.91	0.86	0.82	0.77	0.71

Manufacturer reserves the right to change, at any time, specifications and designs without notice and without obligations.

Dry Coil Air Delivery* - Horizontal and Downflow Discharge Sizes 24-60

Unit Size	Heating Rise °F (°C)	Motor Speed	Tap	Allowable Functions		ESP (in. W.C.)									
						0.1	0.2	0.3	0.4	0.5	0.6	0.7	0.8	0.9	1
60090	35 - 65 (19 - 36)	Low†	Blue		CFM	641	551	462	385	289	216	163	115	---	---
					BHP	0.05	0.06	0.06	0.07	0.07	0.08	0.08	0.09	---	---
					Gas Heat Rise (°F)	NA	NA	NA	NA	NA	NA	NA	NA	NA	NA
					Gas Heat Rise (°C)	NA	NA	NA	NA	NA	NA	NA	NA	NA	NA
		Med-Low‡	Pink	Heating Alternate Cooling	CFM	1437	1395	1351	1307	1265	1221	1176	1132	1084	1039
					BHP	0.29	0.30	0.31	0.32	0.33	0.34	0.35	0.36	0.37	0.38
					Gas Heat Rise (°F)	47	48	50	51	53	55	57	59	62	64
					Gas Heat Rise (°C)	26	27	28	28	29	30	32	33	34	36
		Medium**	Red	Cooling	CFM	1914	1881	1848	1814	1780	1748	1716	1681	1619	1512
					BHP	0.62	0.64	0.65	0.67	0.68	0.69	0.71	0.72	0.71	0.66
					Gas Heat Rise (°F)	NA	NA	NA	NA	NA	NA	NA	NA	NA	NA
					Gas Heat Rise (°C)	NA	NA	NA	NA	NA	NA	NA	NA	NA	NA
		Med-High	Orange	Alternate Cooling	CFM	1928	1897	1862	1830	1796	1764	1732	1698	1620	1512
					BHP	0.64	0.65	0.67	0.68	0.69	0.71	0.72	0.73	0.71	0.66
					Gas Heat Rise (°F)	NA	NA	NA	NA	NA	NA	NA	NA	NA	NA
					Gas Heat Rise (°C)	NA	NA	NA	NA	NA	NA	NA	NA	NA	NA
		High	Black	High Static Cooling Only	CFM	2212	2167	2124	2061	1976	1892	1794	1699	1567	1438
					BHP	0.97	0.99	1.00	0.97	0.95	0.91	0.86	0.82	0.77	0.71

Shaded areas indicate speed/static combinations that are not permitted for dehumidification speed.

* Air delivery values are without air filter and are for dry coil (See Wet Coil Pressure Drop Table).
† Factory-shipped continuous fan speed
‡ Factory-shipped heating speed
** Factory-shipped cooling speed
"High Static Cooling" = Only to be used for cooling function (not allowed for heating function)
NOTE: Deduct field-supplied air filter pressure drop and wet coil pressure drop to obtain static pressure available for ducting.

Wet Coil Pressure Drop (IN. W.C.)

Unit Size	Standard CFM (SCFM)																
	600	700	800	900	1000	1100	1200	1300	1400	1500	1600	1700	1800	1900	2000	2100	2200
24	0.03	0.04	0.04	0.05	0.06												
30				0.05	0.06	0.07	0.08	0.11									
36				0.02	0.03	0.03	0.04	0.05	0.05								
42					0.05	0.05	0.06	0.07	0.08	0.08	0.09	0.09	0.11				
48							0.04	0.05	0.05	0.06	0.07	0.07	0.08	0.09	0.14		
60										0.06	0.07	0.01	0.08	0.09	0.10	0.12	0.13

Economizer with 1-in. Filter Pressure Drop (IN. W.C.)

Filter Size in. (mm)	Cooling Tons	Standard CFM (SCFM)																
		600	700	800	900	1000	1100	1200	1300	1400	1500	1600	1700	1800	1900	2000	2100	2200
600-1400 CFM 12x20x1+12x20x1 (305x508x25+305x508x25)	2.0, 2.5	-	-	0.08	0.09	0.10	0.11	0.11	0.13	0.14	-	-	-	-	-	-	-	-
1200-1800CFM 16x24x1+14x24x1 (406x610x25+356x610x25)	3.5	-	-	-	-	-	0.09	0.09	0.10	0.12	0.13	0.15	0.17	0.17	0.19	0.21	-	-
1500-2200CFM 16x24x1+18x24x1 (406x610x25+457x610x25)	3.0, 4.0, 5.0	-	-	-	-	-	-	-	-	-	0.15	0.17	0.18	0.20	0.21	0.22	0.23	0.23

Manufacturer reserves the right to change, at any time, specifications and designs without notice and without obligations.

Filter Pressure Drop Table (IN. W.C.)

Filter Size in. (mm)	Cooling Tons	Standard CFM (SCFM)																
		600	700	800	900	1000	1100	1200	1300	1400	1500	1600	1700	1800	1900	2000	2100	2200
600-1400CFM 12x20x1+12x20x1 (305x508x25+305x508x25	2.0, 2.5	0.03	0.05	0.06	0.08	0.10	0.11	0.13	0.14	0.16	-	-	-	-	-	-	-	-
1200-1800 CFM 16x24x1+14x24x1 (406x610x25+356x610x25)	3.5	-	-	-	-	-	-	0.07	0.08	0.09	0.09	0.10	0.11	0.12	-	-	-	-
1100-2200 CFM 16x24x1+18x24x1 (406x610x25+457x610x25)	3.0 4.0 5.0	-	-	-	-	-	0.02	0.02	0.03	0.03	0.04	0.06	0.08	0.10	0.11	0.13	0.14	0.15

Manufacturer reserves the right to change, at any time, specifications and designs without notice and without obligations.

Typical Piping and Wiring

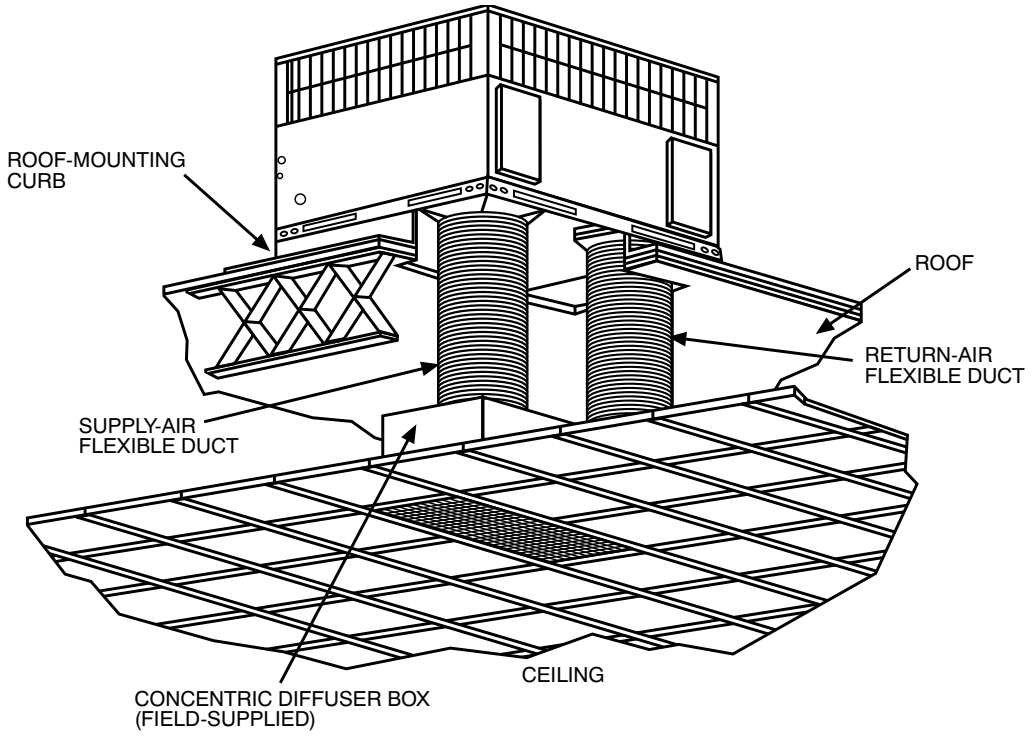

A09230

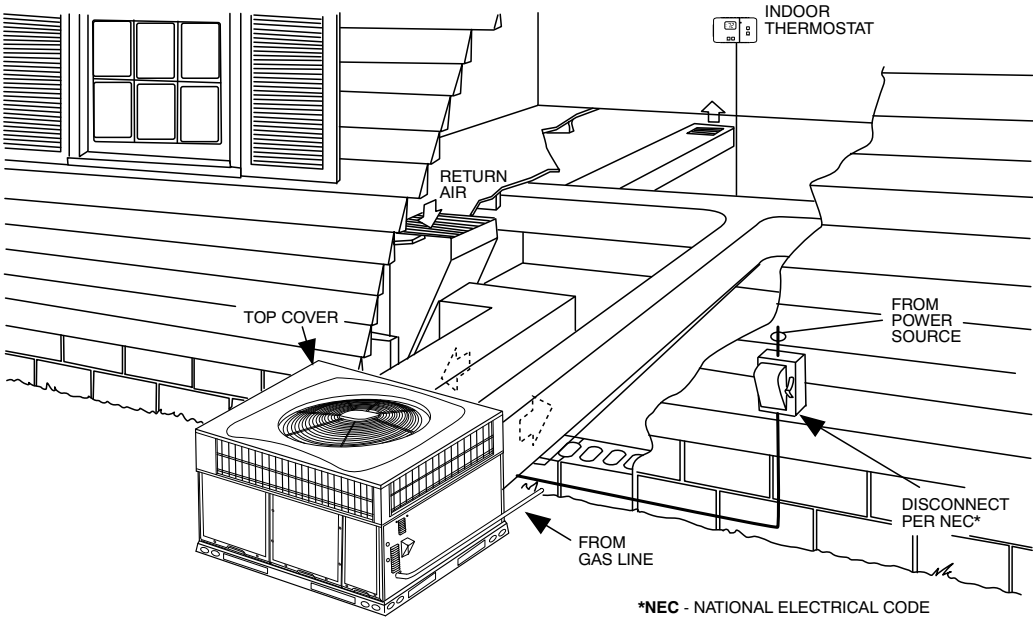

A09231

Application Data

Condensate trap — A 2-in. (50.8 mm) condensate trap must be field supplied.

Ductwork — Secure downflow discharge ductwork to roof curb. For horizontal discharge applications, attach ductwork to unit with flanges.

To convert a unit to downflow discharge — Units are equipped with factory-installed inserts in the down-flow openings. Removal of the inserts is similar to removing an electrical knock-out. Use the duct cover to seal the horizontal discharge openings in the unit. Units installed in horizontal discharge orientation do not require duct covers.

Airflow — Units are draw-thru in the cooling mode and blow-thru in the heating mode.

Maximum cooling airflow — To minimize the possibility of condensate blow-off from the evaporator, airflow through the units should not exceed 450 CFM per ton.

Minimum cooling airflow — Minimum cooling airflow is 350 cfm per ton.

Minimum ambient cooling operation temperature — All standard units have a minimum ambient operating temperature of 40°F (4°C). With accessory low ambient temperature kit, units can operate at temperatures down to 0°F (-17°C).

Minimum temperature — Air entering the heat exchanger in heating mode must be a minimum of 50°F (10°C) continuous and/or 45°F (7°C) intermittent.

Electrical Data

MODEL	NOMINAL V-PH-HZ	VOLTAGE RANGE		COMPRESSOR		OFM	IFM	IDM	POWER SUPPLY	
		MIN	MAX	RLA	LRA	FLA	FLA	FLA	MCA	MOCP
24040, 24060	208/230-1-60	197	253	11.1	59.5	0.6	3.9	0.7	18.4	25
30040, 30060	208/230-1-60	197	253	14.1	67.9	1.05	3.9	0.7	22.6	30
36060	208/230-1-60	197	253	14.7	75	1.05	3.8	0.7	23.3	35
36060	208/230-3-60	197	253	8.5	70	1.05	3.8	0.7	15.5	25
42060, 42090	208/230-1-60	197	253	16.7	109	1.05	5.8	0.7	27.8	40
42060, 42090	208/230-3-60	197	253	11.2	84	1.05	5.8	0.7	20.9	30
48090	208/230-1-60	197	253	19.6	130	1.05	6.9	0.7	32.5	50
48090	208/230-3-60	197	253	13.7	83.1	1.05	6.9	0.7	25.1	35
60090	208/230-1-60	197	253	23.9	124.5	1.05	6.9	0.7	37.9	60
60090	208/230-3-60	197	253	13.5	93	1.05	6.9	0.7	24.9	35

LEGEND

FLA - Full Load Amps
IDM - Inducer Motor
IFM - Indoor Fan Motor
LRA -Locked Rotor Amps
MCA - Minimum Circuit Amps
MOCP - Maximum Over Current Protection
OFM - Outdoor Fan Motor
RLA - Rated Load Amps

NOTES:

1. In compliance with NEC (National Electrical Code) requirements for multimotor and combination load equipment (refer to NEC Articles 430 and 440), the overcurrent protective device for the unit shall be Power Supply fuse or circuit breaker.
2. Minimum wire size is based on 60 C copper wire. If other than 60 C wire is used, or if length exceeds wire length in table, determine size from NEC.
3. Unbalanced 3-Phase Supply Voltage
   Never operate a motor where a phase imbalance in supply voltage is greater than 2%. Use the following formula to determine the percentage of voltage imbalance

   % Voltage imbalance

   $$= 100 \times \frac{\text{max voltage deviation from average voltage}}{\text{average voltage}}$$

EXAMPLE: Supply voltage is 230-3-60.

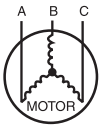

AB = 228 v
BC = 231 v
AC = 227 v

$$\text{Average Voltage} = \frac{228 + 231 + 227}{3} = \frac{686}{3} = 229$$

Determine maximum deviation from average voltage.
(AB) 229 - 228 = 1 v
(BC) 231 - 229 = 2 v
(AC) 229 - 227 = 2 v

Maximum deviation is 2 v.

Determine percent of voltage imbalance

$$\% \text{ Voltage Imbalance} = 100 \times \frac{2}{229} = 0.8\%$$

This amount of phase imbalance is satisfactory as it is below the maximum allowable 2%.

IMPORTANT: If the supply voltage phase imbalance is more than 2%, contact your local electric utility company immediately.

A06564

Connection Wiring Schematic 208/230-1-60

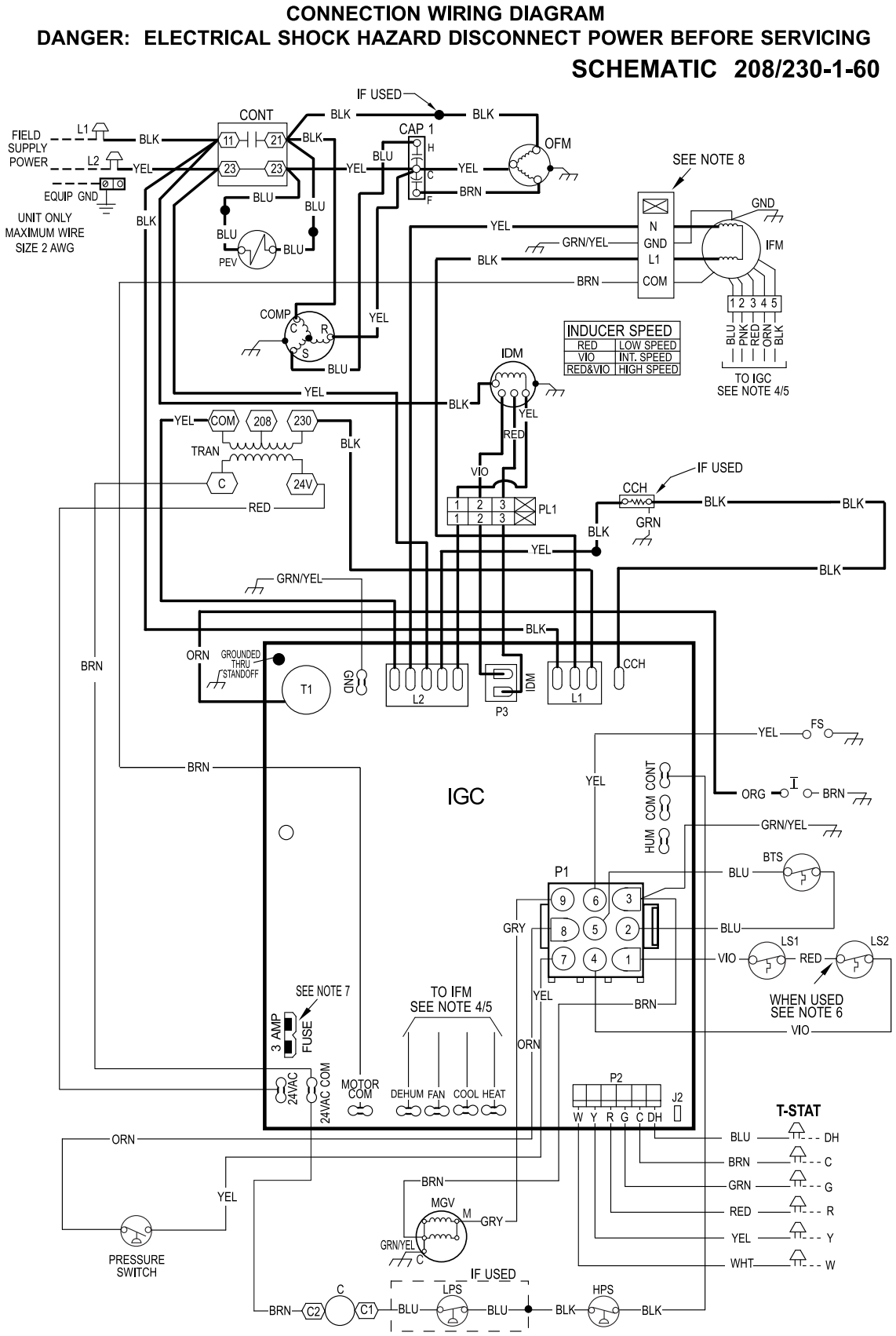

A230140

Ladder Wiring Schematic 208/230-1-60

LADDER WIRING DIAGRAM
DANGER: ELECTRICAL SHOCK HAZARD DISCONNECT POWER BEFORE SERVICING

LEGEND

	FIELD SPLICE	CONT	COMPRESSOR CONTACTOR
	TERMINAL (MARKED)	EQUIP	EQUIPMENT
	TERMINAL (UNMARKED)	FS	FLAME SENSOR
	SPLICE	GND	GROUND
	SPLICE (MARKED)	HPS	HIGH PRESSURE SWITCH
	FACTORY LO VOLTAGE	I	IGNITOR
	FIELD CONTROL WIRING	IDM	INDUCED DRAFT MOTOR
	FIELD POWER WIRING	IFM	INDOOR FAN MOTOR
	ACCESSORY OR OPTIONAL WIRING	IGC	INTEGRATED GAS UNIT CONTROLLER
	FACTORY HI VOLTAGE	LPS	LOW PRESSURE SWITCH
BTS	BURNER THERMAL SWITCH	LS1	PRIMARY LIMIT SWITCH
C	CONTACTOR	LS2	SECONDARY LIMIT SWITCH
CAP1	CAPACITOR, COMP	MGV	MAIN GAS VALVE
CAP2	CAPACITOR, INDUCER (WHEN USED)	OFM	OUTDOOR FAN MOTOR
CCH	CRANKCASE HEATER	OT	QUADRUPLE TERMINAL
CHS	CRANKCASE HEATER SWITCH	PEV	PRESSURE EQUALIZER VALVE (IF USED)
COMP	COMPRESSOR MOTOR	TRAN	TRANSFORMER
		T-STAT	THERMOSTAT

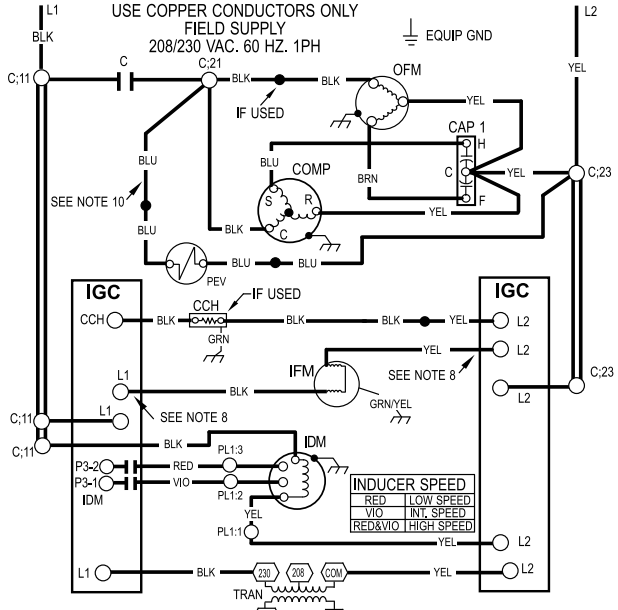

1Ø UNIT COMPONENT ARRANGEMENT

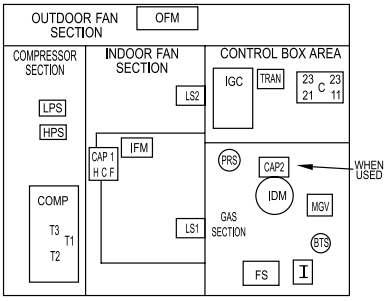

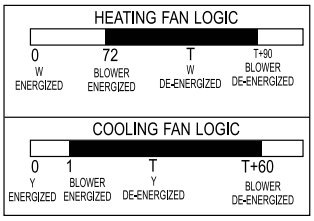

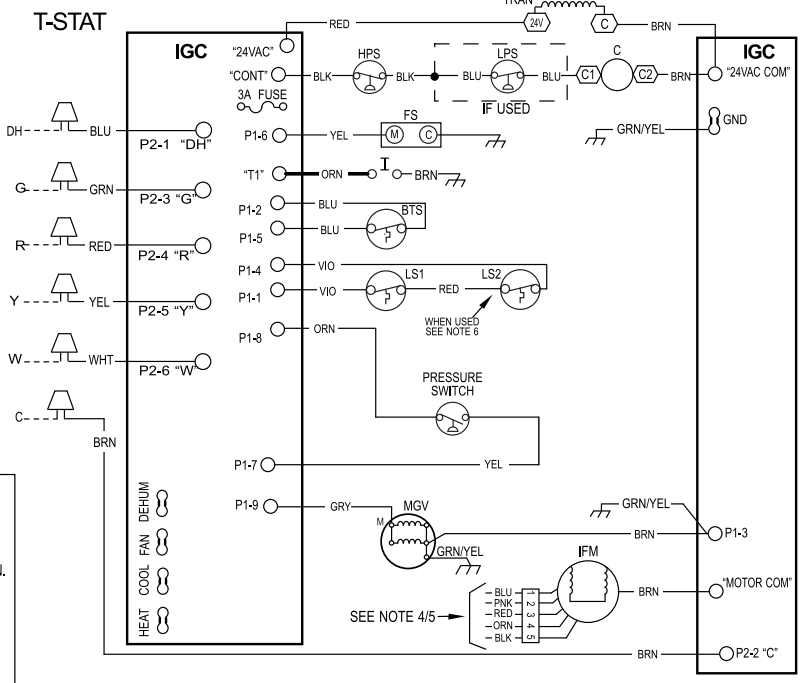

NOTES:

1. IF ANY OF THE ORIGINAL WIRES FURNISHED ARE REPLACED THEY MUST BE REPLACED WITH THE SAME WIRE OR IT'S EQUIVALENT.
2. SEE PRE-SALE LITERATURE FOR THERMOSTATS.
3. USE 75 DEGREES C COPPER CONDUCTORS FOR FIELD INSTALLATION.
4. REFER TO INSTALLATION INSTRUCTIONS FOR CORRECT SPEED SELECTION FOR IFM.
5. SEE INSTALLATION INSTRUCTIONS FOR PROPER HEATING AND COOLING CONNECTIONS FOR YOUR UNIT.
6. ON SOME MODELS LS1 AND LS2 ARE WIRED IN SERIES. ON OTHER MODELS ONLY LS1 IS USED.
7. THIS FUSE IS MANUFACTURED BY LITTLE FUSE, P/N 287003.
8. DO NOT DISCONNECT PLUG UNDER LOAD.
9. N.E.C. CLASS 2, 24V.
10. PEV FOUND ON SELECT ROTARY COMPRESSORS.
11. INDUCER MOTOR USES A 230V CONTROL SIGNAL.

349850–701 REV. –

349850-701 REV. -

A230141

Connection Wiring Schematic 208/230-3-60

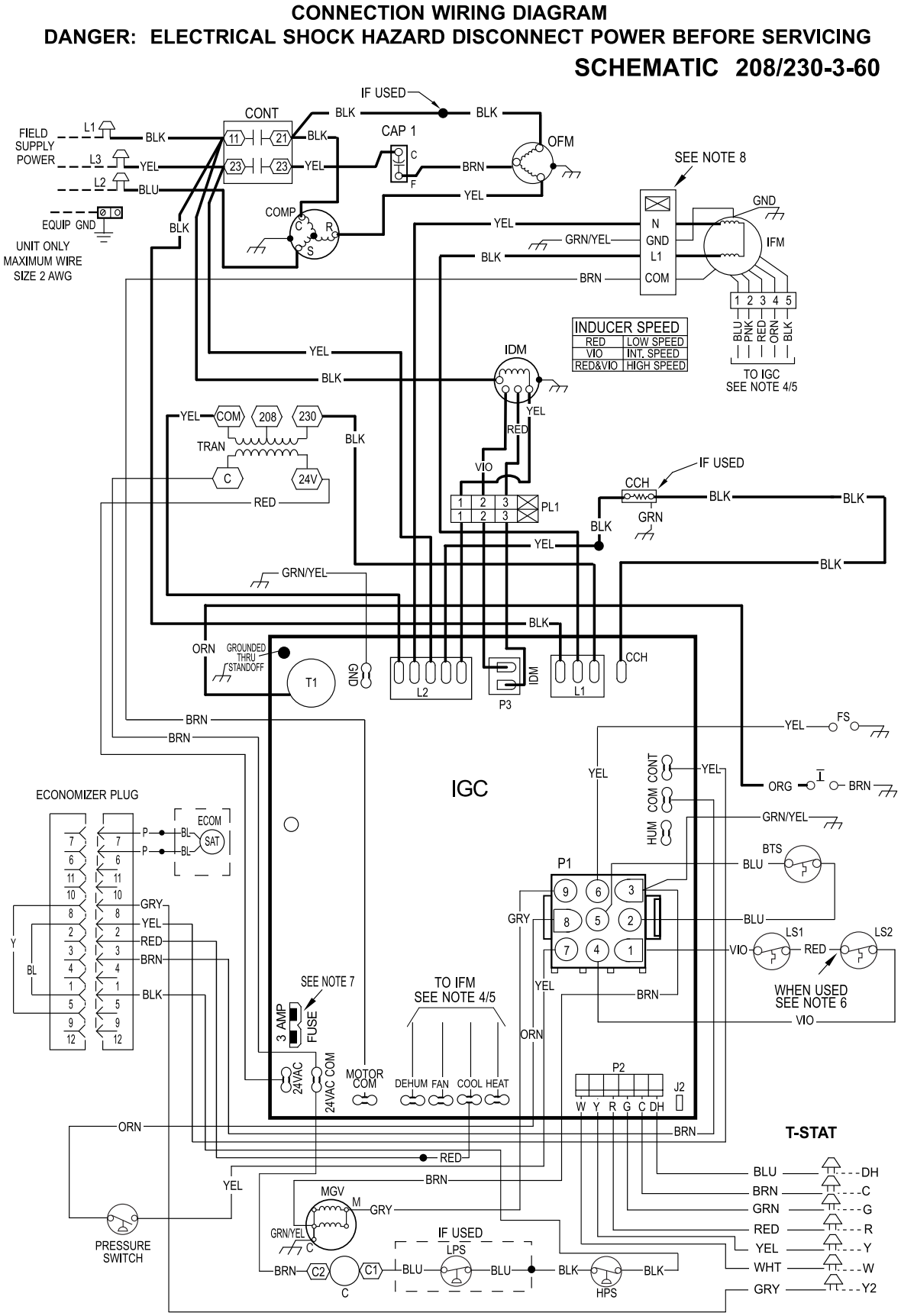

A230142

Ladder Wiring Schematic 208/230-3-60

LADDER WIRING DIAGRAM
DANGER: ELECTRICAL SHOCK HAZARD DISCONNECT POWER BEFORE SERVICING

LEGEND

FIELD SPLICE	
TERMINAL (MARKED)	
TERMINAL (UNMARKED)	
SPLICE	
SPLICE (MARKED)	
FACTORY LO VOLTAGE	
FIELD CONTROL WIRING	
FIELD POWER WIRING	
ACCESSORY OR OPTIONAL WIRING	
FACTORY HI VOLTAGE	
BTS	BURNER THERMAL SWITCH
C	CONTACTOR
CAP1	CAPACITOR, COMP
CAP2	CAPACITOR, INDUCER (WHEN USED)
CCH	CRANKCASE HEATER
CHS	CRANKCASE HEATER SWITCH
COMP	COMPRESSOR MOTOR
CONT	COMPRESSOR CONTACTOR
EQUIP	EQUIPMENT
FS	FLAME SENSOR
GND	GROUND
HPS	HIGH PRESSURE SWITCH
I	IGNITOR
IDM	INDUCED DRAFT MOTOR
IFM	INDOOR FAN MOTOR
IGC	INTEGRATED GAS UNIT CONTROLLER
LPS	LOW PRESSURE SWITCH
LS1	PRIMARY LIMIT SWITCH
LS2	SECONDARY LIMIT SWITCH
MGV	MAIN GAS VALVE
OFM	OUTDOOR FAN MOTOR
OT	QUADRUPLE TERMINAL
TRAN	TRANSFORMER
T-STAT	THERMOSTAT

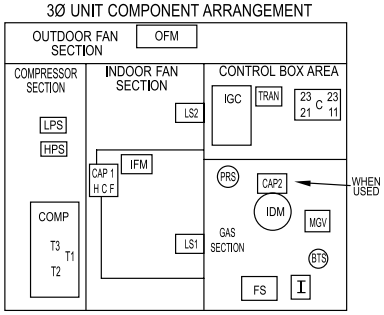

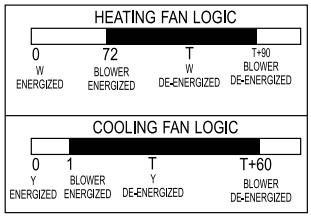

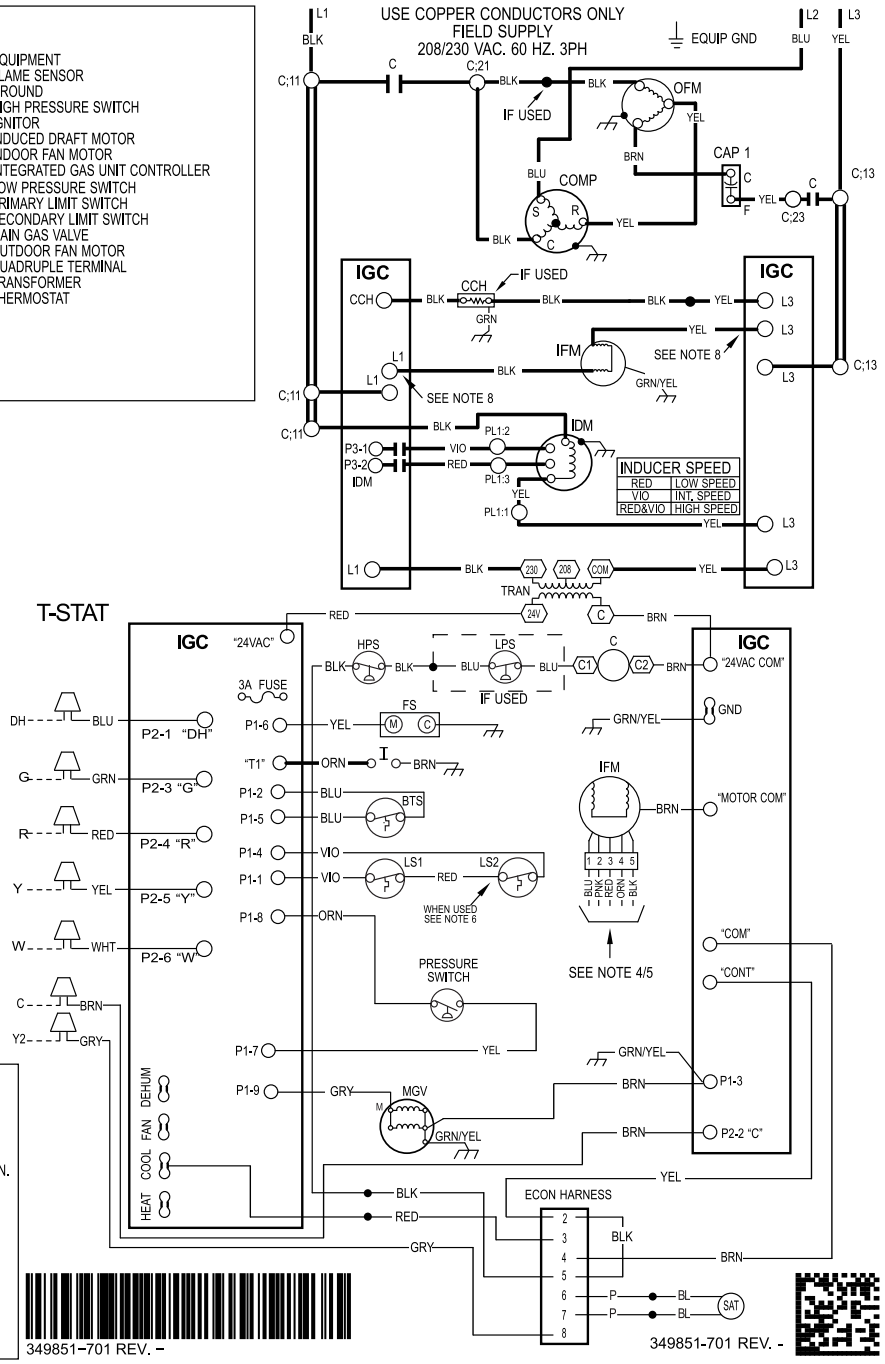

NOTES:

1. IF ANY OF THE ORIGINAL WIRES FURNISHED ARE REPLACED THEY MUST BE REPLACED WITH THE SAME WIRE OR IT'S EQUIVALENT.
2. SEE PRE-SALE LITERATURE FOR THERMOSTATS.
3. USE 75 DEGREES C COPPER CONDUCTORS FOR FIELD INSTALLATION.
4. REFER TO INSTALLATION INSTRUCTIONS FOR CORRECT SPEED SELECTION FOR IFM.
5. SEE INSTALLATION INSTRUCTIONS FOR PROPER HEATING AND COOLING CONNECTIONS FOR YOUR UNIT.
6. ON SOME MODELS LS1 AND LS2 ARE WIRED IN SERIES. ON OTHER MODELS ONLY LS1 IS USED.
7. THIS FUSE IS MANUFACTURED BY LITTLE FUSE, P/N 287003.
8. DO NOT DISCONNECT PLUG UNDER LOAD.
9. N.E.C. CLASS 2, 24V.
10. INDUCER MOTOR USES A 230V CONTROL SIGNAL.

A230143

Controls

Operating Sequence

Heating Sequence of Operation (Ultra Low NOx Single and Three Phase Models)

On a call for heating, terminal W of the thermostat is energized, starting the induced-draft motor for a 30 second pre-purge at intermediate speed. When the pressure switch senses that the induced-draft motor is moving sufficient combustion air, the burner sequence begins. This function is controlled by the integrated gas unit controller (IGC).

After 30 sec of pre-purge is complete, the pressure switch checks for sufficient combustion. Then, the gas valve energizes and the system attempts to ignite with igniter being energized. The igniter energizes for 5 sec and integrated gas controller (IGC) allows system to sense flame for 2 sec at the end of 5 sec of ignition trial. On first successful ignition, system stays at the intermediate inducer speed for 10 sec and gradually ramps up to the high speed for steady-state operation. The system uses the same logic for 2nd ignition trial. If a 3rd or 4th ignition attempt is needed, the inducer speed is decreased to the low speed. On a successful light on the 3rd or 4th attempt, the inducer speed is increased to the intermediate speed for about 10 seconds and then gradually ramps up to the high speed for steady-state operation. In case the 4th attempt fails, the system will lock out for 1 hr. After 1 hr. lock out period, the system starts with normal operating sequence. Once flame is established and proven successfully, indoor (evaporator) fan motor is energized after 30 seconds. When the thermostat is satisfied and W is de-energized, the pre-mix burner will stop firing and the indoor (evaporator) fan motor shuts off after a 90 second time-off delay. Please note that the IGC has the capability to automatically decrease the indoor (evaporator) fan motor "ON" delay and increase the indoor (evaporator) fan motor "OFF" delay in the event of high duct static and/or partially-clogged filter.

Cooling Sequence of Operation

With the room thermostat SYSTEM switch in the COOL position and the FAN switch in the AUTO position, the cooling sequence of operation is as follows:

1. When the room temperature rises to a point that is slightly above the cooling control setting of the thermostat, the thermostat completes the circuit between thermostat terminal R to terminals Y and G.
2. The normally open contacts of energized contactor (C) close and complete the circuit through compressor motor (COMP) to condenser (outdoor) fan motor (OFM). Both motors start instantly.
3. The set of normally open contacts on the interface fan board (IFB) are closed which energizes a circuit to the indoor fan motor (IFM).

NOTE: Once the compressor has started and then stopped, it should not be started again until 5 minutes have elapsed. The cooling cycle remains on until the room temperature drops to a point that is slightly below the cooling control setting of the room thermostat. At this point, the thermostat breaks the circuit between thermostat terminal R to terminals Y and G. These open circuits deenergize contactor coil C. The condenser and compressor motors stop. After a 60-sec. delay, the blower motor stops. The unit is in a standby condition, waiting for the next call for cooling from the room thermostat.

Manufacturer reserves the right to change, at any time, specifications and designs without notice and without obligations.

Guide Specifications

Packaged Gas Heating/Electric Cooling Units Constant Volume Application

HVAC Guide Specifications

Size Range:**2 to 5 Tons, Nominal Cooling**

60,000 to 90,000 Btuh,

Nominal Heating Input

General

SYSTEM DESCRIPTION

Outdoor rooftop mounted, gas heating/electric cooling unit utilizing a hermetic scroll compressor for cooling duty. Unit shall discharge supply air vertically or horizontally as shown on contract drawings. Condenser fan/coil section shall have a draw-thru design with vertical discharge for minimum sound levels.

QUALITY ASSURANCE

- Unit shall be rated in accordance with AHRI Standards 210/240 and 270-1995.
- Unit shall be designed in accordance with UL Standard 1995 and ANSI Z 21.47.
- Unit shall be manufactured in a facility registered to ISO 9001 manufacturing quality standard.
- Unit shall be UL listed and c-UL certified as a total package for safety requirements.
- Roof curb shall be designed to conform to NRCA Standards.
- Insulation and adhesives shall meet NFPA 90.1 requirements for flame spread and smoke generation.
- Cabinet insulation shall meet ASHRAE Standard 62.2.

DELIVERY, STORAGE AND HANDLING

- Unit shall be stored and handled per manufacturer's recommendations.

Products

EQUIPMENT

General:

Factory-assembled, single-piece, heating and cooling unit. Contained within the enclosure shall be all factory wiring, piping, controls, refrigerant charge with R-410A refrigerant, and special features required prior to field start-up.

Unit Cabinet:

- Unit cabinet shall be constructed of phosphated, zinc-coated, pre-painted steel capable of with-standing 500 hours in salt spray.
- Normal service shall be through 3 removable cabinet panels.
- The unit shall be constructed on a rust proof unit base that has an externally trapped, integrated sloped drain.
- Evaporator fan compartment top surface shall be insulated with a minimum 1/2-in. (12.7 mm) thick, flexible fiberglass insulation, coated on the air side and retained by adhesive and mechanical means. The evaporator wall sections will be insulated with a minimum semi-rigid foil-faced board capable of being wiped clean. Aluminum foil-faced fiberglass insulation shall be used in the entire indoor air cavity section.
- Unit shall have a field-supplied condensate trap.

Fans:

- The evaporator fan shall be a multi-speed, direct-drive, as shown on equipment drawings.
- Fan wheel shall be made from steel, be double-inlet type with forward curved blades with corrosion resistant finish. Fan wheel shall be dynamically balanced.
- Condenser fan shall be direct drive propeller type with aluminum blades riveted to corrosion resistant steel spiders, be dynamically balanced, and discharge air vertically.

Compressor:

- Fully hermetic compressors with factory-installed vibration isolation.

Coils:

Evaporator and condenser coils shall have aluminum plate fins mechanically bonded to seamless copper tubes with all joints brazed. Tube sheet openings shall be belled to prevent tube wear.

Heating Section:

- Induced-draft combustion type with energy saving direct spark ignition system and redundant main gas valve.
- Induced-draft motors shall provide adequate airflow for combustion.
- The heat exchangers shall be constructed of stainless steel for corrosion resistance.
- Pre-mixed burners shall be stainless steel and other alloys.
- All gas piping and electric power shall enter the unit cabinet at a single location.

Refrigerant Components:

Refrigerant expansion device shall be of the TXV (thermostatic expansion valve) or fixed orifice type.

Filters:

Filter section shall consist of field-installed, throwaway, 1-in. (25 mm) thick fiberglass filters of commercially available sizes.

Controls and Safeties:

- Unit controls shall be complete with a self-contained low voltage control circuit.
- Compressors shall incorporate a solid-state compressor protector that provides reset capability.

Operating Characteristics:

- Unit shall be capable of starting and running at 125°F (51°C) ambient outdoor temperature per maximum load criteria of AHRI Standard 210.
- Compressor with standard controls shall be capable of operation down to 40°F (4°C) ambient outdoor temperature.
- Units shall be provided with fan time delay to prevent cold air delivery before the heat exchanger warms up.
- Unit shall be provided with 60-second fan time delay (single phase models) after the thermostat is satisfied.

Electrical Requirements:

All unit power wiring shall enter the unit cabinet at a single location.

Motors:

- Compressor motors shall be of the refrigerant-cooled type with line-break thermal and current overload protection.
- All fan motors shall have permanently lubricated bearings, and inherent, automatic reset, thermal overload protection.
- Condenser fan motor shall be totally enclosed.
- Evaporator Fan Motor to be ECM Motor.

Compressor Protection:

Solid-state control shall protect compressor by preventing "short cycling."

Manufacturer reserves the right to change, at any time, specifications and designs without notice and without obligations.

Guide Specifications (Continued)

Ultra Low NOx:

Shall provide NOx reduction to meet 14ng/J NOx emissions requirements as shipped from the factory.

Special Features Available:

1. Coil Options
   Base unit with tin plated indoor coil hairpins available as a factory installed option.
2. Compressor Start Kit (single phase units only):
   Shall provide additional starting torque for single-phase compressors.
3. Thermostat:
   To provide for one-stage heating and cooling in addition manual or automatic changeover and indoor fan control.
4. Crankcase Heater:
   Shall provide anti-floodback protection for low-load cooling applications.
5. Economizer:
   (Horizontal - Field installed accessory)
   (Vertical - Field installed accessory)
   a. Economizer controls capable of providing free cooling using outside air.
   b. Equipped with low leakage dampers not to exceed 3% leakage, at 1.0 IN. W.C. pressure differential.
   c. Spring return motor shuts off outdoor damper on power failure.
6. Filter Rack Kit:
   Shall provide filter mounting for downflow applications. Offered as a field installed accessory.
7. Flat Roof Curb:
   Curbs shall have seal strip and a wood nailer for flashing and shall be installed per manufacturer's instructions.
8. Flue Discharge Deflector
   Directs flue gas exhaust; 90 degrees upward from current discharge.
9. Low Ambient Package:
   Shall consist of a solid-state control and condenser coil temperature sensor for controlling condenser-fan motor operation, which shall allow unit to operate down to 0°F (-18°C) outdoor ambient temperature when properly installed.
10. Manual Outdoor Air Damper:
    Package shall consist of damper, birdscreen, and rainhood which can be preset to admit outdoor air for year-round ventilation.
11. Square-To-Round Duct Transitions (24-48 models):
    Shall have the ability to convert the supply and return openings from rectangular to round.
12. Time Guard II
    Automatically prevents the compressor from restarting for at least 4 minutes and 45 seconds after shutdown of the compressor. Not required when a corporate programmable thermostat is applied or with a RTU-MP control. Offered as a field installed accessory.
13. Louver Metal Outdoor Coil Grille
    Shall provide hail and vandalism protection. Available as a field installed accessory.
14. Low Pressure Switch Kit
    Kit is designed for use when a low pressure control in desired. This kit provides added reliability for the compressor.

© 2023 Carrier. All rights reserved.

Manufacturer reserves the right to change, at any time, specifications and designs without notice and without obligations.