BA14NA
Single-Stage Air Conditioner with Puron® Refrigerant
1-1/2 To 5 Tons

Product Data

Bryant Air Conditioners with Puron® refrigerant provide a collection of features unmatched by any other family of equipment. The BA14NA has been designed utilizing Bryant's non-ozone depleting Puron refrigerant.

NOTE: Ratings contained in this document are subject to change at any time. Always refer to the AHRI directory (www.ahridirectory.org) for the most up–to–date ratings information.

Industry leading Features / Benefits

Efficiency

- 14.0 - 14.5 SEER / 11.5 – 12.0 EER (based on tested combination and unit size)
- Microtube Technologyt refrigeration system
- Indoor air quality accessories available

Reliability

- Non-ozone depleting Puron® refrigerant
- Scroll compressor
- Internal pressure relief valve
- Internal thermal overload
- Filter drier

Durability

Duraguard™ Protection Package:

- Solid, durable sheet metal construction
- Dense wire coil guard

Applications

- Long–line – up to 250 feet (76.20 m) total equivalent length, up to 200 feet (60.96 m) condenser above evaporator, or up to 80 ft. (24.38 m) evaporator above condenser (See Longline Guide for more information.)
- Low ambient down to (–10°F/–23°C) with accessory kit.

Product Number Nomenclature

BA14	N	A	024	00G	B	A
14 SEER Air Conditioner with Puron Refrigerant	**Electrical Supply** N = 208/230-60-1	**A = Major Series**	**Nominal Capacity** **018** = 1-1/2 Tons **024** = 2 Tons **030** = 2-1/2 Tons **036** = 3 Tons **042** = 3-1//2 Tons **048** = 4 Tons **060** = 5 Tons	**Variations** **00G** = Dense Grill and Copper Tube Coil **00L** = Dense Grill and Aluminum Tube Coil	**Not Defined**	**Series**

Use of the AHRI Certified Mark indicates a manufacturer's participation in the program. For verification of certification for individual products, go to www.ahridirectory.org.

Quality ISO 9001

CATALOG ORDERING NUMBERS

Size	Copper Coil Models	Aluminum Coil Models*
18	BA14NA01800G	BA14NA01800L
24	BA14NA02400G	BA14NA02400L
30	BA14NA03000G	BA14NA03000L
36	BA14NA03600G	BA14NA03600L
42	BA14NA04200G	BA14NA04200L
48	BA14NA04800G	BA14NA04800L
60	BA14NA06000G	BA14NA06000L

* Aluminum models phasing in March 2021 through February 2022. Please check with your supplier for availability.

STANDARD FEATURES

Features	18	24	30	36	42	48	60
Puron Refrigerant	X	X	X	X	X	X	X
SEER (Range depending on indoor combination)	14 - 16	14 - 16	14 - 16	14 - 16	14 - 16	14 - 15	14 - 15
Scroll Compressor	X	X	X	X	X	X	X
Field Installed Filter Drier	X	X	X	X	X	X	X
Front Seating Service Valves	X	X	X	X	X	X	X
Internal Pressure Relief Valve	X	X	X	X	X	X	X
Internal Thermal Overload	X	X	X	X	X	X	X
Long Line capability	X	X	X	X	X	X	X
Low Ambient capability with Kit	X	X	X	X	X	X	X

Manufacturer reserves the right to change, at any time, specifications and designs without notice and without obligations.

Physical Data-Copper Coil Models

UNIT SIZE - SERIES	1800G-A	2400G-A	3000G-A	3600G-A	4200G-A	4800G-A	6000G-A
Compressor Type	Scroll						
REFRIGERANT	Puron® (R-410A)						
Control	TXV (Puron Hard Shutoff)						
Factory Charge lb (kg)	3.18 (1.44)	3.73 (1.69)	5.67 (2.57)	4.67 (2.12)	7.90 (3.58)	8.31 (3.77)	9.39 (4.26)
Required Charge lb (kg)*	4.77 (2.16)	4.20 (1.91)	--	--	--	--	--
COND FAN	Propeller Type, Direct Drive						
Air Discharge	Vertical						
Air Qty (CFM)	1600	1881	2614	3310	3700	3454	3700
Motor HP	1/12	1/12	1/10	1/5	1/4	1/4	1/4
Motor RPM	1100	1100	1100	1100	1110	1110	1100
COND COIL							
Face Area (Sq ft)	8.4	9.9	17.24	12.9	21.6	15.1	17.25
Fins per In.	25	25	25	20	25	20	20
Rows	1	1	1	1	1	2	2
Circuits	3	4	4	5	7	6	8
VALVE CONNECT. (In. ID)							
Vapor	3/4	3/4	3/4	7/8	7/8	7/8	7/8
Liquid	3/8						
REFRIGERANT TUBES (In. OD)							
Rated Vapor†	3/4	3/4	3/4	7/8	7/8	7/8	1-1/8
Max Liquid Line‡	3/8						

*.For 15 ft. Line Set
†.Units are rated with 25 ft (7.6 m) of lineset length. See Vapor Line Sizing and Cooling Capacity Loss table when using other sizes and lengths of lineset.
‡.See Liquid Line Sizing For Cooling Only Systems with Puron Refrigerant tables.
"--" = Factory charge and required charge values are equal
Note: See unit Installation Instruction for proper installation.

Physical Data-Aluminum Coil Models

UNIT SIZE - SERIES	1800L-A	2400L-A	3000L-A	3600L-A	4200L-A	4800L-A	6000L-A
Compressor Type	Scroll						
REFRIGERANT	Puron® (R-410A)						
Control	TXV (Puron Hard Shutoff)						
Factory Charge lb (kg)*	2.80 (1.27)	3.28 (1.49)	5.67 (2.57)	4.11 (1.86)	7.90 (3.58)	8.31 (3.77)	9.39 (4.26)
Required Charge lb (kg)}	5.53 (2.51)	5.24 (2.38)	6.77 (3.07)	5.87 (2.66)	8.57 (3.89)	9.52 (4.32)	10.63 (4.82)
COND FAN	Propeller Type, Direct Drive						
Air Discharge	Vertical						
Air Qty (CFM)	1825	2008	3110	3353	3454	3454	3700
Motor HP	1/12	1/12	1/10	1/5	1/4	1/4	1/4
Motor RPM	1100	1100	1100	1100	1110	1110	1100
COND COIL							
Face Area (Sq ft)	8.40	9.85	17.25	12.93	23.71	15.09	19.40
Fins per In.	25	25	25	20	25	20	20
Rows	1	1	1	1	1	2	2
Circuits	3	5	4	5	7	6	9
VALVE CONNECT. (In. ID)							
Vapor	3/4	3/4	3/4	7/8	7/8	7/8	7/8
Liquid	3/8						
REFRIGERANT TUBES (In. OD)							
Rated Vapor†	3/4	3/4	3/4	7/8	7/8	7/8	1-1/8
Max Liquid Line‡	3/8						

*.For 15 ft. Line Set
†.Units are rated with 25 ft (7.6 m) of lineset length. See Vapor Line Sizing and Cooling Capacity Loss table when using other sizes and lengths of lineset.
‡.See Liquid Line Sizing For Cooling Only Systems with Puron Refrigerant tables.
Note: See unit Installation Instruction for proper installation.

Manufacturer reserves the right to change, at any time, specifications and designs without notice and without obligations.

REFRIGERANT PIPING LENTHG LIMITATIONS

Liquid Line Sizing and Maximum Total Equivalent Lengths{ for Cooling Only Systems with Puron® Refrigerant:

The maximum allowable length of a residential split system depends on the liquid line diameter and vertical separation between indoor and outdoor units.

See Table below for liquid line sizing and maximum lengths :

Table 1 – Maximum Total Equivalent Length*
Outdoor Unit BELOW Indoor Unit

Size	Liquid Line Connection	Liquid Line Diam. w/ TXV	AC with Puron Refrigerant Maximum Total Equivalent Length†: Outdoor unit BELOW Indoor Vertical Separation ft (m)								
			0-5 (0-1.5)	6-10 (1.8-3.0)	11-20 (3.4-6.1)	21-30 (6.4-9.1)	31-40 (9.4-12.2)	41-50 (12.5-15.2)	51-60 (15.5-18.3)	61-70 (18.6-21.3)	71-80 (21.6-24.4)
18000	3/8	1/4	150	150	125	100	100	75	--	--	--
		5/16	250*	250*	250*	250*	250*	250*	250*	225*	150
		3/8	250*	250*	250*	250*	250*	250*	250*	250*	250*
24000	3/8	1/4	75	75	75	50	50	--	--	--	--
		5/16	250*	250*	250*	250*	250*	225*	175	125	100
		3/8	250*	250*	250*	250*	250*	250*	250*	250*	250*
30000	3/8	1/4	30	--	--	--	--	--	--	--	--
		5/16	175	225*	200	175	125	100	75	--	--
		3/8	250*	250*	250*	250*	250*	250*	250*	250*	250*
36000	3/8	5/16	175	150	150	100	100	100	75	--	--
		3//8	250*	250*	250*	250*	250*	250*	250*	250*	250*
42000	3/8	5/16	125	100	100	75	75	50	--	--	--
		3/8	250*	250*	250*	250*	250*	250*	250*	250*	150
48000	3/8	3/8	250*	250*	250*	250*	250*	250*	230	160	--
60000	3/8	3/8	250*	250*	250*	225*	190	150	110	--	--

*.Maximum actual length not to exceed 200 ft (61 m)
†.Total equivalent length accounts for losses due to elbows or fitting. See the Long Line Guideline for details.
-- = outside acceptable range

Table 2 – Maximum* Total Equivalent Length
Outdoor Unit ABOVE Indoor Unit

Size	Liquid Line Connection	Liquid Line Diam. w/ TXV	AC with Puron Refrigerant Maximum Total Equivalent Length†: Outdoor unit ABOVE Indoor Vertical Separation ft (m)							
			25 (7.6)	26-50 (7.9-15.2)	51-75 (15.5-22.9)	76-100 (23.2-30.5)	101-125 (30.8-38.1)	126-150 (38.4-45.7)	151-175 (46.0-53.3)	176-200 (53.6-61.0)
18000	3/8	1/4	175	250*	250*	250*	250*	250*	250*	250*
		5/16	250*	250*	250*	250*	250*	250*	250*	250*
		3/8	250*	250*	250*	250*	250*	250*	250*	250*
24000	3/8	1/4	100	125	175	200	225*	250*	250*	250*
		5/16	250*	250*	250*	250*	250*	250*	250*	250*
		3/8	250*	250*	250*	250*	250*	250*	250*	250*
30000	3/8	1/4	30	--	--	--	--	--	--	--
		5/16	250*	250*	250*	250*	250*	250*	250*	250*
		3/8	250*	250*	250*	250*	250*	250*	250*	250*
36000	3/8	5/16	225*	250*	250*	250*	250*	250*	250*	250*
		3/8	250*	250*	250*	250*	250*	250*	250*	250*
42000	3/8	5/16	175	200	250*	250*	250*	250*	250*	250*
		3/8	250*	250*	250*	250*	250*	250*	250*	250*
48000	3/8	3/8	250*	250*	250*	250*	250*	250*	250*	250*
60000	3/8	3/8	250*	250*	250*	250*	250*	250*	250*	250*

*.Maximum actual length not to exceed 200 ft (61 m)
†.Total equivalent length accounts for losses due to elbows or fitting. See the Long Line Guideline for details.
-- = Outside acceptable range

Refrigerant Charge Adjustments

Liquid Line Size	Puron Charge oz/ft (g/m)
3/8	0.60 (17.74) (Factory charge for lineset = 9 oz / 266.16 g)
5/16	0.40 (11.83)
1/4	0.27 (7.98)

Units are factory charged for 15 ft (4.6 m) of 3/8" liquid line*. The factory charge for 3/8" lineset 9 oz. When using other length or diameter liquid lines, charge adjustments are required per the chart above.

Charging Formula:

[(Lineset oz/ft X total length) – (factory charge for lineset)] = charge adjustment

Example 1: System has 15 ft of line set* using existing 1/4" liquid line. What charge adjustment is required?

Formula:(.27 oz/ft X 15ft) – (9 oz) = (-4.95) oz.

Net result is to remove 4.95 oz of refrigerant from the system

Example 2: System has 45 ft of existing 5/16" liquid line. What is the charge adjustment?

Formula:(.40 oz/ft. X 45ft) – (9 oz.) = 9 oz.

Net result is to add 9 oz of refrigerant to the system

NOTE: Conditions must be favorable for charging by subcooling method. Indoor temperature must be 70°F to 80°F (21.1°C to 26.7°C), and outdoor temperature must be 70°F to 100°F (21.1°C to 37.8°C). If outside these conditions, adjust charge for long line sets by weigh-in method.

* When applicable. Refer to Physical Data Table in this PD and to the Installation Instructions for more information.

Long Line Applications

An application is considered Long Line, when the refrigerant level in the system requires the use of accessories to maintain acceptable refrigerant management for systems reliability. See Accessory Usage Guideline table for required accessories. Defining a system as long line depends on the liquid line diameter, actual length of the tubing, and vertical separation between the indoor and outdoor units.

For Air Conditioner systems, the chart below shows when an application is considered Long Line.

Table 3 – AC with Puron® Refrigerant Long Line Description ft (m) Beyond these lengths, a TXV is required

Total Length	Outdoor Unit Above or Below Indoor Unit
TXV required beyond 50 ft. (15.2 m)	TXV required beyond 20 ft. (6.1 m)

Table 4 – AC with Puron® Refrigerant Long Line Description ft (m) (Beyond these lengths, long line accessories are required)

Liquid Line Size	Units On Same Level	Outdoor Below Indoor	Outdoor Above Indoor
1/4 + TXV	No accessories needed within allowed lengths	No accessories needed within allowed lengths	175 (53.3)
5/16 + TXV	120 (36.6)	50 (15.2) vertical or 120 (36.6) total	120 (36.6)
3/8 + TXV	80 (24.4)	35 (10.7) vertical or 80 (24.4) total	80 (24.4)

Note: See Residential Piping and Long Line Guideline for details

VAPOR LINE SIZING AND COOLING CAPACITY LOSS

Acceptable vapor line diameters provide adequate oil return to the compressor while avoiding excessive capacity loss. The suction line diameters shown in the chart below are acceptable for AC systems with **Puron®** refrigerant:

Table 5 – Vapor Line Sizing and Cooling Capacity Losses — Puron® Refrigerant 1-Stage Air Conditioner Applications

Unit Nominal Size (Btuh)	Maximum Liquid Line Diameters (In. OD)	Vapor Line Diameters (In. OD)	Cooling Capacity Loss (%) Total Equivalent Line Length ft. (m) 1-Stage AC with Puron®								
			26-50 (7.9-15.2)	51-80 (15.5-24.4)	81-100 (24.7-30.5)	101-125 (30.8-38.1)	126-150 (38.4-45.7)	151-175 (46.0-53.3)	176-200 (53.6-61.0)	201-225 (61.3-68.6)	226-250 (68.9-76.2)
18	3/8	1/2	1	2	3	5	6	7	8	9	11
		5/8	0	1	1	1	2	2	2	3	3
		3/4	0	0	0	0	1	1	1	1	1
24	3/8	5/8	0	1	2	2	3	3	4	5	5
		3/4	0	0	1	1	1	1	1	2	2
		7/8	0	0	0	0	0	1	1	1	1
30	3/8	5/8	1	2	3	3	4	5	6	7	8
		3/4	0	0	1	1	1	2	2	2	3
		7/8	0	0	0	0	1	1	1	1	1
36	3/8	5/8	1	2	4	5	6	8	9	10	12
		3/4	0	1	1	2	2	3	3	4	4
		7/8	0	0	0	1	1	1	1	2	2
42	3/8	3/4	0	1	2	2	3	4	4	5	6
		7/8	0	0	1	1	1	2	2	2	3
		1 1/8	0	0	0	0	0	0	0	0	0
48	3/8	3/4	0	1	2	3	4	5	5	6	7
		7/8	0	0	1	1	2	2	2	3	3
		1 1/8	0	0	0	0	0	0	0	1	1
60	3/8	3/4	1	2	4	5	6	7	9	10	11
		7/8	0	1	2	2	3	4	4	5	5
		1 1/8	0	0	0	1	1	1	1	1	1

Applications in this area may be long line and may have height restrictions. See the Residential Piping and Long Line Guideline.

ACCESSORIES (For Copper Coil Models)

KIT NUMBER	KIT NAME	UNIT SIZE - SERIES						
		1800G-A	2400G-A	3000G-A	3600G-A	4200G-A	4800G-A	6000G-A
KAACH1201AAA	CRANKCASE HEATER KIT					X	X	X
KAACH1401AAA	CRANKCASE HEATER KIT	X	X	X	X			
KAAFT0101AAA	FREEZE THERMISTOR KIT	X	X	X	X	X	X	X
KAATD0101TDR	TIME DELAY KIT	X	X	X	X	X	X	X
KSACY0101AAA	CYCLE PROTECTOR KIT	X	X	X	X	X	X	X
KAAWS0101AAA	WINTER START KIT	X	X	X	X	X	X	X
KSALA0301410	LOW AMBIENT KIT	X	X	X	X	X	X	X
KSALA0601AAA	MOTORMASTER KIT	X	X	X	X	X	X	X
KAALP0401PUR	LOW PRESSURE SWITCH KIT	X	X	X	X	X	X	X
KAAHI0501PUR	HIGH PRESSURE SWITCH KIT	X	X	X	X	X	X	X
KSASF0101AAA	SUPPORT FEET KIT (5 blocks)				X	X	X	X
KSASF0201AAA	SUPPORT FEET KIT (4 blocks)	X	X	X				
KSASH2301COP	SOUND BLANKET KIT			X		X	X	
KSASH2401COP	SOUND BLANKET KIT							X
KSASH2501COP	SOUND BLANKET KIT	X	X		X			
KAALS0201LLS*	SOLENOID VALVE KIT	X	X	X	X	X	X	X
KSAHS1501AAA	COMPRESSOR START ASSIST	X	X	X	X	X	X	X
KSATX0201PUR	TXV KIT - For use with copper coils	X	X					
KSATX0301PUR	TXV KIT - For use with copper coils			X	X	X		
KSATX0401PUR	TXV KIT - For use with copper coils						X	
KSATX0501PUR	TXV KIT - For use with aluminum coils							X
KSBTX0201PUR	TXV KIT - For use with aluminum coils.	X	X					
KSBTX0301PUR	TXV KIT- For use with aluminum coils.			X	X	X		
KSBTX0401PUR	TXV KIT- For use with aluminum coils.						X	X

X = Accessory
* Do not use hard shutoff TXV with liquid solenoid valve.

ACCESSORIES (for Aluminum Coil Models)

KIT NUMBER	KIT NAME	UNIT SIZE - SERIES						
		1800L-A	2400L-A	3000L-A	3600L-A	4200L-A	4800L-A	6000L-A
KSAFT0101AAA	FRZ THERM KIT	X	X	X	X	X	X	X
KAATD0101TDR	TIME DELAY KIT	X	X	X	X	X	X	X
KSALA0301410	LOW AMBIENT KIT	X	X	X	X	X	X	X
KSALA1001AAA	MOTORMASTER KIT	X	X	X	X	X	X	X
KSAHS2501AAA	HARD START KIT	X	X	X	X	X		X
KSAHS2701AAA	HARD START KIT						X	
KSACY0101AAA	CYCLE PROTR KIT	X	X	X	X	X	X	X
KSASF0201AAA	SPRT FEET KIT	X	X	X	X	X	X	X
KAACS0201PTC	PTC KIT	X	X	X	X	X	X	X
KAALS0201LLS*	SOL VALVE KIT	X	X	X	X	X	X	X
KAAWS0101AAA	WINTER ST KIT	X	X	X	X	X	X	X
KAALP0401PUR	LOW PRESSURE SW KIT	X	X	X	X	X	X	X
KAAHI0501PUR	HIGH PRESSURE SW KIT	X	X	X	X	X	X	X
KAACH1701AAA	CRKC HTR KIT	X	X	X	X			
KAACH1601AAA	CRKC HTR KIT					X	X	X
KSATX0201PUR	TXV KIT	X	X	X				
KSBTX0201PUR	TXV KIT	X	X	X				
KSATX0301PUR	TXV KIT				X	X		
KSBTX0301PUR	TXV KIT				X	X		
KSATX0401PUR	TXV KIT						X	X
KSBTX0401PUR	TXV KIT						X	X
KSASH2301COP	SOUND BLKT KIT	X		X				
KSASH2401COP	SOUND BLKT KIT					X	X	X
KSASH2501COP	SOUND BLKT KIT		X		X			

ACCESSORY USAGE GUIDELINE

ACCESSORY	REQUIRED FOR LOW-AMBIENT COOLING APPLICATIONS (Below 55°F/12.8°C)	REQUIRED FOR LONG LINE APPLICATIONS*	REQUIRED FOR SEA COAST APPLICATIONS (Within 2 miles/3.22 km)
Ball Bearing Fan Motor	Standard	Standard	Standard
Compressor Start Assist Capacitor and Relay	Yes	Yes	No
Crankcase Heater	Yes	Yes	No
Evaporator Freeze Thermostat	Yes	No	No
Hard Shut-Off TXV	Yes	Yes	Yes
Liquid Line Solenoid Valve	No	No	No
Motor Master® Control or Low-ambient Pressure Switch	Yes	No	No
Support Feet	Recommended	No	Recommended
Winter Start Control	Yes #	No	No

*For tubing set lengths between 80 and 200 ft. (24.38 and 60.96 m) horizontal or 35 ft. ((10.7 m) vertical differential (total equivalent length), refer to the Residential Split-System Longline Application Guideline.

#Required if Low Pressure Switch is factory or field installed.

Accessory Description and Usage (Listed Alphabetically)

1. Ball-Bearing Fan Motor

A fan motor with ball bearings which permits speed reduction while maintaining bearing lubrication.

Usage Guideline:

Required on all units when MotorMaster® is used.

2. Compressor Start Assist - Capacitor and Relay

Start capacitor and relay gives a ”hard” boost to compressor motor at each start up.

Usage Guideline:

Required for reciprocating compressors in the following applications:

- Long line
- Low ambient cooling
- Hard shut off expansion valve on indoor coil
- Liquid line solenoid on indoor coil

Required for single-phase scroll compressors in the following applications:

- Long line
- Low ambient cooling

Suggested for all compressors in areas with a history of low voltage problems.

3. Crankcase Heater

An electric resistance heater which mounts to the base of the compressor to keep the lubricant warm during off cycles. Improves compressor lubrication on restart and minimizes the chance of liquid slugging.

Usage Guideline:

Required in low ambient cooling applications.

Required in long line applications.

Suggested in all commercial applications.

4. Cycle Protector

The cycle protector is designed to prevent compressor short cycling. This control provides an approximate 5-minute delay after power to the compressor has been interrupted for any reason, including power outage, protector control trip, thermostat jiggling, or normal cycling.

5. Evaporator Freeze Thermostat

An SPST temperature-actuated switch that stops unit operation when evaporator reaches freeze-up conditions.

Usage Guideline:

Required when low ambient kit has been added.

6. Low-Ambient Pressure Switch Kit

A long life pressure switch which is mounted to outdoor unit service valve. It is designed to cycle the outdoor fan motor in order to maintain head pressure within normal operating limits (approximately 100 psig to 225 psig). The control will maintain working head pressure at low-ambient temperatures down to 0°F (-18°C) when properly installed and also using wind baffles. Instructions provided in accessory kit.

Usage Guideline:

A Low-Ambient Pressure Switch or MotorMaster® Low-Ambient Controller must be used when cooling operation is used at outdoor temperatures below 55°F (12.8°C).

7. MotorMaster® Low-Ambient Controller

A fan-speed control device activated by a temperature sensor, designed to control condenser fan motor speed in response to the saturated, condensing temperature during operation in cooling mode only. For outdoor temperatures down to –10°F/–23.3°C), it maintains condensing temperature at 100°F ±10°F (37.8°C ±5.5°C).

Usage Guideline:

A MotorMaster® Low Ambient Controller or Low-Ambient Pressure Switch must be used when cooling operation is used at outdoor temperatures below 55°F (12.8°C).

Suggested for all commercial applications.

8. Outdoor Air Temperature Sensor

This device enables the thermostat to display the outdoor temperature. This device is also required to enable special thermostat features such as auxiliary heat lock out.

Usage Guideline:

Suggested for use with compatible Bryant thermostats.

9. Sound Hood

Wraparound sound reducing cover for the compressor. Reduces the sound level of the compressor.

Usage Guideline:

Suggested when unit is installed closer than 15 ft (4.57 m) to quiet areas, bedrooms, etc.

Suggested when unit is installed between two houses less than 10 ft (3.05 m) apart.

Manufacturer reserves the right to change, at any time, specifications and designs without notice and without obligations.

Accessory Description and Usage (Listed Alphabetically) Continued

10. Support Feet

Four or five stick-on plastic feet that raise the unit 4 in. (101.6 mm) above the mounting pad. This allows sand, dirt, and other debris to be flushed from the unit base, minimizing corrosion.

Usage Guideline:

Suggested in the following applications:

Coastal installations.

Windy areas or where debris is normally circulating.

Rooftop installations.

For improved sound ratings.

11. Thermostatic Expansion Valve (TXV)

A modulating flow-control valve which meters refrigerant liquid flow rate into the evaporator in response to the superheat of the refrigerant gas leaving the evaporator.

Kit includes valve, adapter tubes, and external equalizer tube. Hard shut off types are available.

NOTE: When using a hard shut off TXV with single phase reciprocating compressors, a Compressor Start Assist Capacitor and Relay is required.

Usage Guideline:

Required to achieve AHRI ratings in certain equipment combinations. Refer to combination ratings.

Hard shut off TXV or LLS required in air conditioner long line applications.

Required for use on all zoning systems.

12. Time-Delay Relay

An SPST delay relay which briefly continues operation of indoor blower motor to provide additional cooling after the compressor cycles off.

NOTE: Most indoor unit controls include this feature. For those that do not, use the guideline below.

Usage Guideline:

For improved efficiency ratings for certain combinations of indoor and outdoor units. Refer to AHRI Unitary Directory.

13. Winter Start Control

This control is designed to alleviate nuisance opening of the low-pressure switch by bypassing it for the first 3 minutes of operation.

AHRI RATINGS

For AHRI ratings certificates, please refer to the AHRI directory www.ahridirectory.org
Additional ratings and system combinations can be accessed via the Bryant Ratings database here: www.MyBryantRatings.com

ELECTRICAL DATA

	UNIT SIZE - SERIES	V/PH	OPER VOLTS*		COMPR		FAN	MCA	MAX FUSE† or CKT BRK AMPS
			MAX	MIN	LRA	RLA	FLA		
Copper Coil Models	1800G-A	208/230/1	253	197	47.5	9.0	0.40	11.7	20
	2400G-A				62.9	10.9	0.50	14.1	20
	3000G-A				67.8	12.8	0.75	16.8	25
	3600G-A				79.0	13.6	1.10	18.1	30
	4200G-A				109.0	16.7	1.40	22.3	35
	4800G-A				105.5	15.5	1.40	20.8	35
	6000G-A				127.1	20.8	1.52	27.5	40
Aluminum Coil Models	1800L-A	208/230/1	253	197	48.0	8.0	0.40	10.4	15
	2400L-A				61.0	10.6	0.50	13.8	20
	3000L-A				64.3	11.8	0.75	15.6	25
	3600L-A				79.0	13.6	1.05	18.1	30
	4200L-A				123.9	19.2	1.40	25.4	40
	4800L-A				105.5	15.6	1.40	20.9	35
	6000L-A				152.5	23.7	1.52	31.1	50

*.Permissible limits of the voltage range at which the unit will operate satisfactorily
†.Time-Delay fuse.

FLA- Full Load Amps
LRA - Locked Rotor Amps
MCA- Minimum Circuit Amps
RLA- Rated Load Amps
NOTE:Control circuit is 24V on all units and requires external power source. Copper wire must be used from service disconnect to unit.
All motors/compressors contain internal overload protection.
Complies with 2010 requirements of ASHRAE Standards 90.1

A–Weighted Sound Power (dBA)

UNIT SIZE	STANDARD RATING	TYPICAL OCTAVE BAND SPECTRUM (without tone adjustment)						
		125	250	500	1000	2000	4000	8000
18	75	50.8	56.9	62.3	68.8	70.0	66.5	58.7
24	73	52.7	61.0	65.2	69.3	66.8	63.0	56.4
30	73	53.7	59.8	66.1	67.6	64.3	61.7	57.0
36	75	57.4	66.4	70.0	70.2	67.6	64.4	58.5
42	73	54.4	62.3	66.5	69.5	64.7	60.7	51.7
48	76	56.9	64.9	67.3	69.2	65.4	63.0	53.9
60	75	54.3	63.3	66.8	69.1	65.7	61.9	56.0

NOTE: Tested in compliance with AHRI 270–2008 (not listed with AHRI)

A–Weighted Sound Power (dBA) with sound shield

UNIT SIZE	Standard Rating (dBA)	TYPICAL OCTAVE BAND SPECTRUM (dBA without tone adjustment)						
		125	250	500	1000	2000	4000	8000
18	75	53.6	58.1	62.6	67.4	68.5	63.7	55.6
24	73	50.6	61.3	65.3	68.7	66.4	62.3	55.3
30	72	53.5	59.5	66.3	67.5	64.2	61.5	56.2
36	75	56.8	65.9	69.5	69.4	67.3	63.5	56.1
42	72	55.9	63.4	66.0	68.7	63.7	59.4	49.8
48	73	60.3	65.3	67.9	68.3	64.1	60.7	51.9
60	73	55.8	62.7	67.0	69.7	64.4	60.8	54.0

NOTE: Tested in compliance with AHRI 270–2008 (not listed with AHRI)

CHARGING SUBCOOLING (TXV-TYPE EXPANSION DEVICE)

UNIT SIZE	required subcooling (Copper Coil) °F (°C)	required subcooling (Aluminum Coil) °F (°C)	INDOOOR
18	16 (8.9)	14 (7.8)	TXV*
24	10 (5.6)	10 (5.6)	
30	12 (6.7)	11 (6.1)	
36	11 (6.1)	10 (5.6)	
42	9 (5.0)	10 (5.6)	
48	11 (6.1)	11 (6.1)	
60	13 (7.2)	13 (7.2)	

*.TXV must be ordered separately when indoor coil is not equipped with a TXV. TXV must be hard–shutoff type.
NOTE: Units are rated with 25 ft (7.6 m) of lineset length. See Vapor Line Sizing and Cooling Capacity Loss table when using other sizes and lengths of lineset.

Manufacturer reserves the right to change, at any time, specifications and designs without notice and without obligations.

DIMENSIONS (Copper Coil Models)

UNIT	SERIES	ELECTRICAL CHARACTERISTICS				A		B		C		D		E		F		G		H		I		J		K		OPERATING WEIGHT		SHIPPING WEIGHT		SHIPPING LENGTH / WIDTH (Sq.)		SHIPPING HEIGHT	
						INCH	MM	INCH	MM	INCH	MM	INCH	MM	INCH	MM	INCH	MM	INCH	MM	INCH	MM	INCH	MM	INCH	MM	INCH	MM	Lbs	Kgs	Lbs	Kgs	INCH	MM	INCH	MM
BA14NA01800GAAAA	A	Y	N	N	N	23 1/8	587.3	24 7/8	631.6	3/4	19.1	4 7/16	113.0	18 1/16	459.0	7 13/16	197.9	5/16	7.9	3	76.2	13	330.2	11 1/8	282.6	10 1/4	260.4	123	55.8	134	60.8	24 1/8	612.7	26 7/16	672.1
BA14NA02400GAAAA	A	Y	N	N	N	25 3/4	654.0	25 5/16	642.4	3/4	19.1	4 7/16	113.0	21 1/4	539.9	9 1/8	231.3	5/16	7.9	3	76.2	13 5/8	346.1	12 1/8	308.0	9 7/8	250.8	119	54.0	140	63.5	26 3/4	679.9	26 15/16	684.8
BA14NA03000GAAAA	A	Y	N	N	N	31 3/16	792.5	31 11/16	804.3	3/4	19.1	6 9/16	166.1	24 11/16	626.3	9 1/8	231.3	5/16	7.9	3	76.2	16 1/8	409.6	15 1/16	382.6	12 5/8	320.7	151	68.5	186	84.4	32 3/16	817.9	33 1/4	844.9
BA14NA03600GAAAA	A	Y	N	N	N	31 3/16	792.5	24 7/8	631.6	7/8	22.2	6 9/16	166.1	24 11/16	626.3	9 1/8	231.3	5/16	7.9	3	76.2	15 9/16	395.3	16 1/2	419.1	10 1/4	260.4	134	60.8	151	68.5	32 3/16	817.9	26 7/16	672.1
BA14NA04200GAAAA	A	Y	N	N	N	31 3/16	792.5	38 7/16	977.1	7/8	22.2	6 9/16	166.1	24 11/16	626.3	9 1/8	231.3	5/16	7.9	3	76.2	16 1/8	409.6	16 11/16	423.9	14	355.6	192	87.1	232	105.2	32 3/16	817.9	40 1/16	1017.7
BA14NA04800GAAAA	A	Y	N	N	N	31 3/16	792.5	28 1/4	718.0	7/8	22.2	6 9/16	166.1	24 11/16	626.3	9 1/8	231.3	5/16	7.9	3	76.2	16 3/16	411.2	16 1/4	412.8	10 1/4	260.4	182	82.6	200	90.7	32 3/16	817.9	29 7/8	758.5
BA14NA06000GAAAA	A	Y	N	N	N	31 3/16	792.5	31 11/16	804.3	7/8	22.2	6 9/16	166.1	24 11/16	626.3	9 1/8	231.3	5/16	7.9	3	76.2	15 1/2	393.7	16	406.4	10 7/8	276.2	197	89.4	218	98.9	32 3/16	817.9	33 1/4	844.9
		208-230-1-60	208/230-3-60	460-3-60	575-3-60	Y=YES N=NO																													

NOTES:

1. CENTER OF GRAVITY ⊕ .

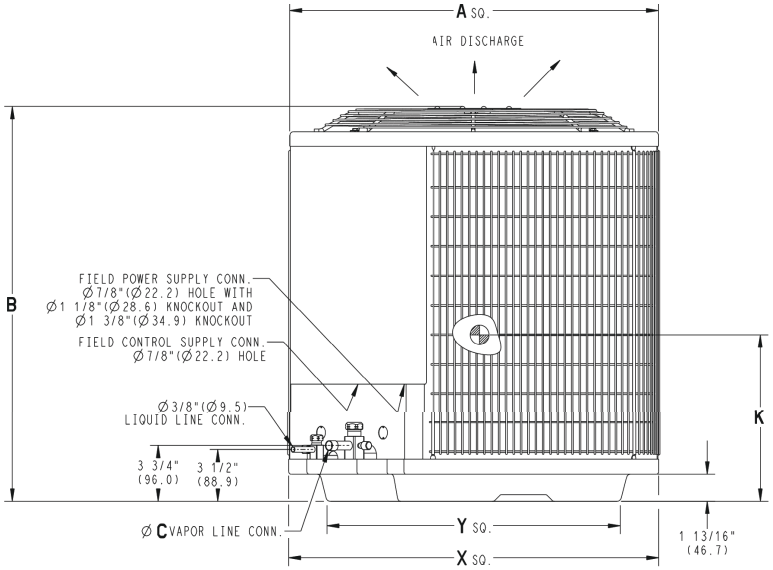

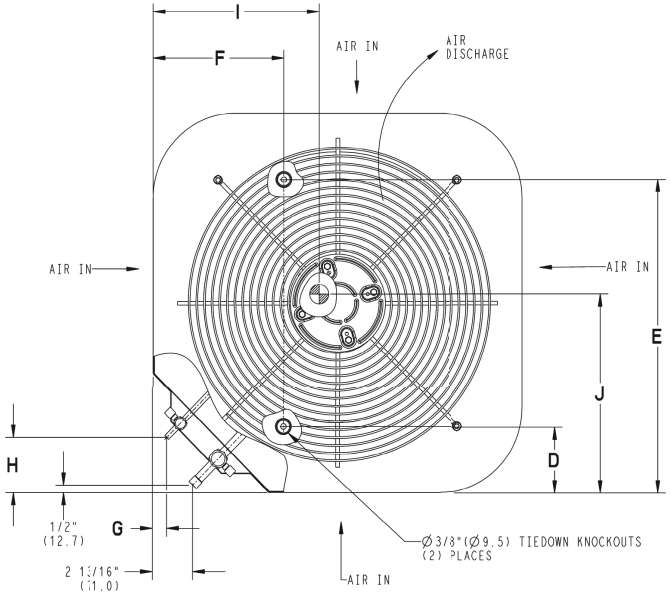

UNIT SIZE	"X" MINIMUM GROUND MOUNTING PAD APPLICATION DIMENSIONS		"Y" MINIMUM ROOF-TOP MOUNTING PAD APPLICATION DIMENSIONS	
18	23 1/8	587.3	17 7/8	454.6
24	25 3/4	654.0	20 7/16	518.5
30,36,42,48,60	31 3/16	792.5	22 15/16	583.2
-	35	889.0	26 3/4	679.7

NOTE: ALL DIMENSIONS IN INCH (MM)

U.S. ECCN: Not Subject to Regulation (N.S.R.)

SD5273-4 REV. F

Manufacturer reserves the right to change, at any time, specifications and designs without notice and without obligations.

DIMENSIONS (Aluminum Coil Models)

UNIT	SERIES	ELECTRICAL CHARACTERISTICS				A		B		C		D		E		F		G		H		I		J		K		OPERATING WEIGHT		SHIPPING WEIGHT		SHIPPING LENGTH / WIDTH (Sq.)		SHIPPING HEIGHT	
						INCH	MM	INCH	MM	INCH	MM	INCH	MM	INCH	MM	INCH	MM	INCH	MM	INCH	MM	INCH	MM	INCH	MM	INCH	MM	Lbs	Kgs	Lbs	Kgs	INCH	MM	INCH	MM
BA14NA01800LAAAA	A	Y	N	N	N	23 1/8	587.3	24 7/8	631.6	3/4	19.1	4 7/16	113.0	18 1/16	459.0	7 13/16	197.9	5/16	7.9	3	76.2	12 1/4	311.2	13 1/2	342.9	12 1/2	317.5	98	44.5	112	50.6	24 1/8	612.7	26 7/16	672.1
BA14NA02400LAAAA	A	Y	N	N	N	25 3/4	654.0	25 5/16	642.4	3/4	19.1	4 7/16	113.0	21 1/4	539.9	9 1/8	231.3	5/16	7.9	3	76.2	14	355.6	13 3/4	349.3	12 1/2	317.5	104	47.2	118	53.3	26 3/4	679.9	26 15/16	684.8
BA14NA03000LAAAA	A	Y	N	N	N	31 3/16	792.5	31 11/16	804.3	3/4	19.1	6 9/16	166.1	24 11/16	626.3	9 1/8	231.3	5/16	7.9	3	76.2	14 3/4	374.7	15 1/2	393.7	13 3/4	349.3	140	63.5	159	72.1	32 3/16	817.9	33 1/4	844.9
BA14NA03600LAAAA	A	Y	N	N	N	31 3/16	792.5	24 7/8	631.6	7/8	22.2	6 9/16	166.1	24 11/16	626.3	9 1/8	231.3	5/16	7.9	3	76.2	16 3/4	425.5	15 1/2	393.7	10 1/2	266.7	125	56.5	143	64.6	32 3/16	817.9	26 7/16	672.1
BA14NA04200LAAAA	A	Y	N	N	N	31 3/16	792.5	41 7/8	1063.4	7/8	22.2	6 9/16	166.1	24 11/16	626.3	9 1/8	231.3	5/16	7.9	3	76.2	16 3/4	425.5	15	381.0	17 3/4	450.9	184	83.5	210	95.3	32 3/16	817.9	43 7/16	1104.1
BA14NA04800LAAAA	A	Y	N	N	N	31 3/16	792.5	28 1/4	718.0	7/8	22.2	6 9/16	166.1	24 11/16	626.3	9 1/8	231.3	5/16	7.9	3	76.2	15 1/2	393.7	16	406.4	13	330.2	166	75.1	182	82.6	32 3/16	817.9	29 7/8	758.5
BA14NA06000LAAAA	A	Y	N	N	N	31 3/16	792.5	35 1/16	890.7	7/8	22.2	6 9/16	166.1	24 11/16	626.3	9 1/8	231.3	5/16	7.9	3	76.2	15	381.0	15 1/2	393.7	15 1/2	393.7	198	89.6	216	97.8	32 3/16	817.9	36 11/16	931.3

208-230-1-60	208/230-3-60	460-3-60	575-3-60	Y=YES N=NO

NOTES:

1. CENTER OF GRAVITY .

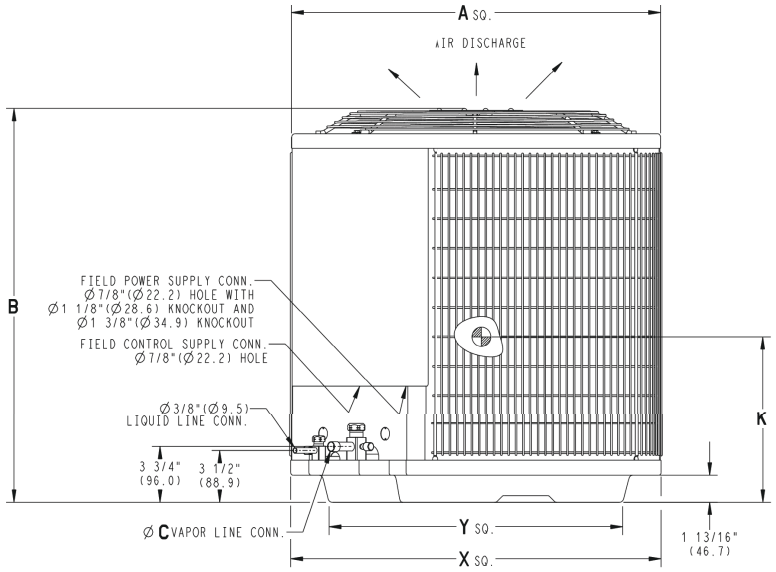

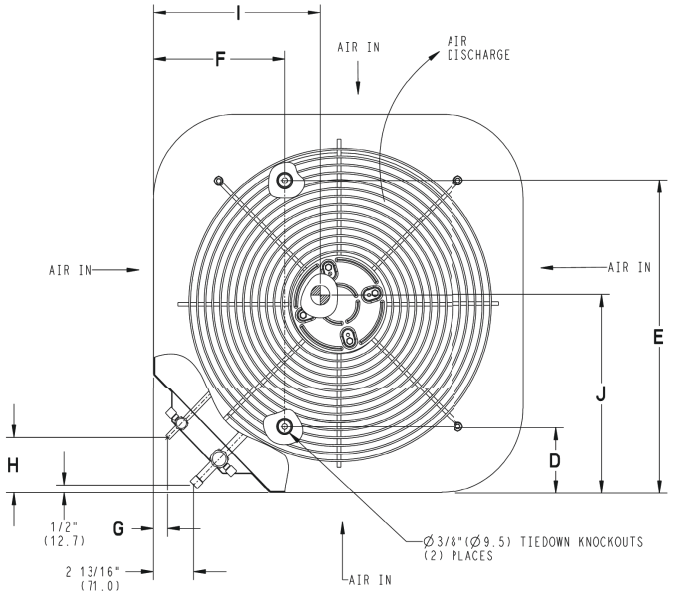

UNIT SIZE	"X" MINIMUM GROUND MOUNTING PAD APPLICATION DIMENSIONS		"Y" MINIMUM ROOF-TOP MOUNTING PAD APPLICATION DIMENSIONS	
18	23 1/8	587.3	17 7/8	454.6
24	25 3/4	654.0	20 7/16	518.5
30,36,42,48,60	31 3/16	792.5	22 15/16	583.2
-	35	889.0	26 3/4	679.7

NOTE: ALL DIMENSIONS IN INCH (MM)

U.S. ECCN: Not Subject to Regulation (N.S.R.)

SD5603-4 REV. B

Manufacturer reserves the right to change, at any time, specifications and designs without notice and without obligations.

CLEARANCES

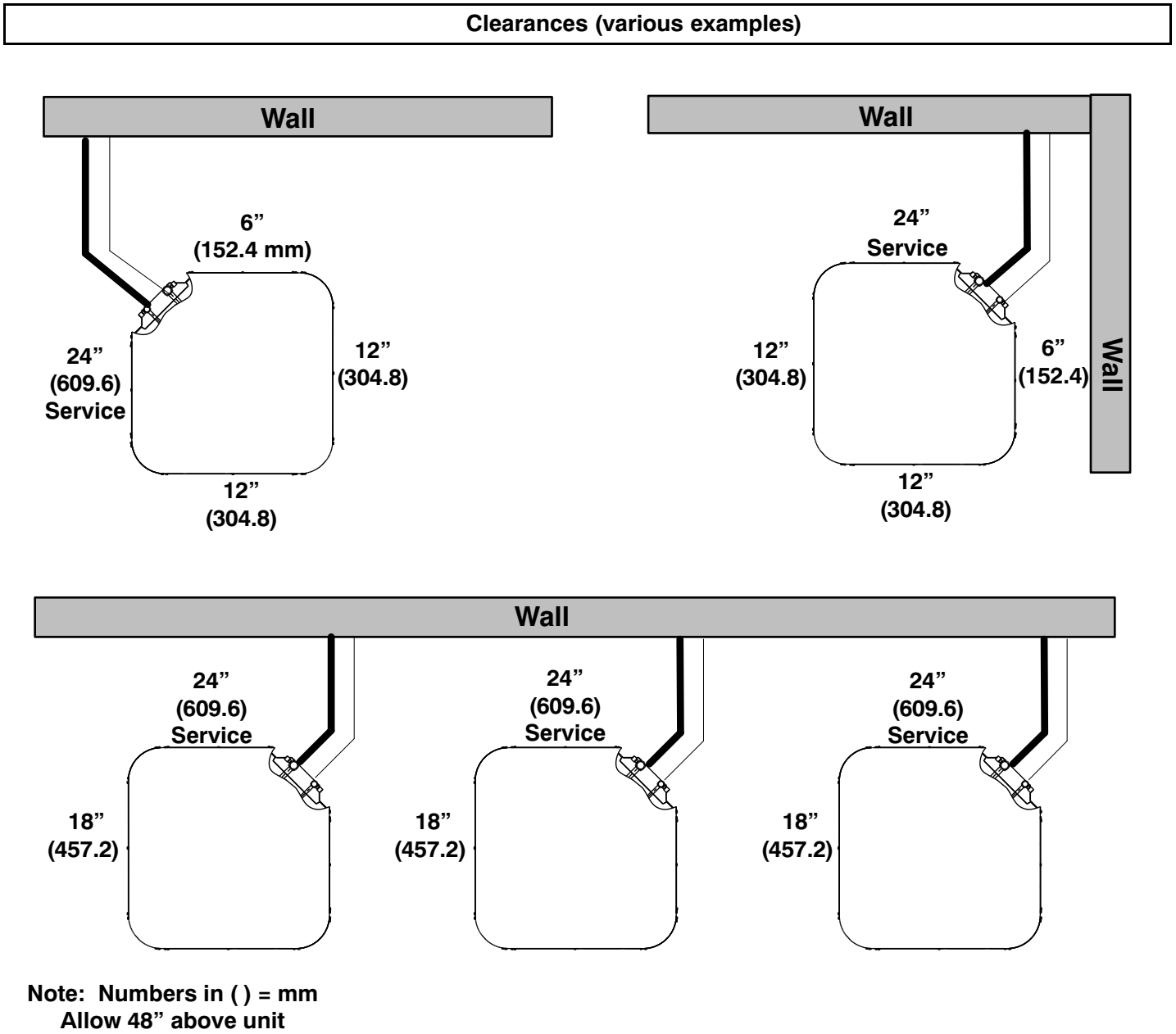

IMPORTANT: When installing multiple units in an alcove, roof well, or partially enclosed area, ensure there is adequate ventilation to prevent re-circulation of discharge air.

Manufacturer reserves the right to change, at any time, specifications and designs without notice and without obligations.

DETAILED COOLING CAPACITIES# -COPPER COIL MODELS

EVAPORATOR AIR		CONDENSER ENTERING AIR TEMPERATURES °F (°C)																	
		75 (23.9)		85 (29.4)			95 (35)			105 (40.6)			115 (46.1)			125 (51.7)			
CFM	EWB °F (°C)	Capacity MBtuh		Total System KW**	Capacity MBtuh		Total System KW**	Capacity MBtuh		Total System KW**	Capacity MBtuh		Total System KW**	Capacity MBtuh		Total System KW**	Capacity MBtuh		Total System KW**
		Total	Sens‡		Total	Sens‡		Total	Sens‡		Total	Sens‡		Total	Sens‡		Total	Sens‡	
BA14NA01800G-A Outdoor Section With CAP3017AL* Indoor Section**																			
525	72 (22.2)	20.84	11.15	1.18	20.08	10.86	1.33	19.26	10.56	1.49	18.34	10.22	1.67	17.28	9.84	1.89	16.07	9.40	2.13
	67 (19.4)	19.05	13.80	1.19	18.30	13.49	1.34	17.50	13.16	1.50	16.60	12.80	1.68	15.58	12.39	1.89	14.40	11.93	2.13
	63 (17.2)††	17.78	13.32	1.20	17.04	12.99	1.34	16.24	12.64	1.50	15.35	12.25	1.68	14.35	11.82	1.89	13.21	11.33	2.14
	62 (16.7)	17.42	16.39	1.20	16.70	16.06	1.34	15.92	15.68	1.50	15.12	15.12	1.68	14.34	14.34	1.89	13.45	13.45	2.13
	57 (13.9)	17.00	17.00	1.20	16.41	16.41	1.34	15.79	15.79	1.50	15.10	15.10	1.68	14.32	14.32	1.89	13.43	13.43	2.13
600	72 (22.2)	21.18	11.76	1.21	20.40	11.48	1.35	19.56	11.17	1.52	18.61	10.83	1.70	17.52	10.45	1.92	16.27	10.01	2.16
	67 (19.4)	19.36	14.78	1.22	18.61	14.48	1.36	17.78	14.15	1.52	16.86	13.79	1.71	15.81	13.37	1.92	14.62	12.90	2.16
	63 (17.2)††	18.10	14.24	1.23	17.35	13.91	1.37	16.53	13.56	1.53	15.62	13.17	1.71	14.59	12.73	1.92	13.42	12.24	2.16
	62 (16.7)	17.79	17.69	1.23	17.14	17.14	1.37	16.49	16.49	1.53	15.76	15.76	1.71	14.94	14.94	1.92	14.00	14.00	2.16
	57 (13.9)	17.72	17.72	1.23	17.11	17.11	1.37	16.46	16.46	1.53	15.74	15.74	1.71	14.92	14.92	1.92	13.98	13.98	2.16
675	72 (22.2)	21.42	12.36	1.23	20.63	12.08	1.38	19.76	11.77	1.55	18.80	11.43	1.73	17.69	11.05	1.94	16.41	10.61	2.19
	67 (19.4)	19.60	15.75	1.25	18.83	15.44	1.39	17.99	15.11	1.55	17.05	14.75	1.73	15.99	14.33	1.95	14.77	13.85	2.19
	63 (17.2)††	18.34	15.14	1.26	17.57	14.81	1.40	16.74	14.45	1.56	15.82	14.06	1.74	14.77	13.61	1.95	13.59	13.10	2.19
	62 (16.7)	18.33	18.33	1.25	17.71	17.71	1.40	17.04	17.04	1.55	16.28	16.28	1.74	15.43	15.43	1.95	14.46	14.46	2.19
	57 (13.9)	18.31	18.31	1.25	17.68	17.68	1.40	17.01	17.01	1.55	16.26	16.26	1.74	15.41	15.41	1.95	14.44	14.44	2.19
BA14NA02400G-A Outdoor Section With CAP2517AL* Indoor Section**																			
700	72 (22.2)	27.81	14.89	1.62	26.74	14.49	1.80	25.61	14.07	2.00	24.39	13.62	2.23	23.06	13.14	2.51	21.56	12.60	2.83
	67 (19.4)	25.46	18.45	1.62	24.46	18.04	1.80	23.40	17.61	2.00	22.25	17.13	2.23	21.01	16.63	2.51	19.58	16.06	2.83
	63 (17.2)††	23.79	17.82	1.62	22.84	17.40	1.80	21.83	16.94	2.00	20.74	16.47	2.24	19.53	15.94	2.52	18.16	15.36	2.85
	62 (16.7)	23.31	21.92	1.62	22.38	21.48	1.80	21.40	21.01	2.00	20.37	20.37	2.24	19.43	19.43	2.51	18.33	18.33	2.84
	57 (13.9)	22.74	22.74	1.62	22.00	22.00	1.80	21.20	21.20	2.00	20.34	20.34	2.24	19.39	19.39	2.51	18.30	18.30	2.84
800	72 (22.2)	28.26	15.70	1.66	27.15	15.30	1.84	25.97	14.87	2.04	24.70	14.42	2.27	23.33	13.94	2.54	21.80	13.40	2.87
	67 (19.4)	25.87	19.75	1.66	24.84	19.33	1.84	23.75	18.90	2.04	22.56	18.42	2.27	21.27	17.91	2.55	19.81	17.34	2.87
	63 (17.2)††	24.22	19.04	1.66	23.25	18.61	1.84	22.19	18.15	2.04	21.05	17.67	2.28	19.82	17.14	2.55	18.40	16.54	2.88
	62 (16.7)	23.79	23.64	1.66	22.94	22.94	1.84	22.09	22.09	2.04	21.17	21.17	2.27	20.16	20.16	2.55	19.00	19.00	2.87
	57 (13.9)	23.69	23.69	1.66	22.90	22.90	1.84	22.06	22.06	2.04	21.14	21.14	2.27	20.13	20.13	2.55	18.98	18.98	2.87
900	72 (22.2)	28.57	16.50	1.70	27.42	16.10	1.87	26.21	15.67	2.08	24.91	15.21	2.31	23.51	14.73	2.58	21.94	14.19	2.90
	67 (19.4)	26.18	21.03	1.70	25.11	20.60	1.88	23.99	20.16	2.08	22.77	19.68	2.31	21.46	19.16	2.58	19.98	18.58	2.91
	63 (17.2)††	24.53	20.22	1.70	23.52	19.79	1.88	22.44	19.33	2.08	21.28	18.83	2.32	20.02	18.30	2.59	18.58	17.68	2.92
	62 (16.7)	24.50	24.50	1.70	23.67	23.67	1.88	22.78	22.78	2.08	21.82	21.82	2.31	20.76	20.76	2.59	19.55	19.55	2.91
	57 (13.9)	24.47	24.47	1.70	23.64	23.64	1.88	22.75	22.75	2.08	21.79	21.79	2.31	20.73	20.73	2.59	19.52	19.52	2.91
BA14NA3000G-A Outdoor Section With CAP3721AL* Indoor Section**																			
875	72 (22.2)	34.17	17.94	1.96	32.63	17.38	2.16	31.02	16.79	2.40	29.33	16.18	2.66	27.51	15.54	2.98	25.57	14.86	3.35
	67 (19.4)	31.02	22.10	1.97	29.61	21.53	2.17	28.14	20.94	2.40	26.58	20.31	2.66	24.91	19.66	2.98	23.13	18.96	3.35
	63 (17.2)††	28.77	21.25	1.97	27.46	20.67	2.17	26.08	20.08	2.40	24.62	19.45	2.67	23.07	18.79	2.98	21.39	18.09	3.35
	62 (16.7)	28.19	26.15	1.97	26.92	25.56	2.17	25.60	25.36	2.40	24.34	24.34	2.66	23.11	23.11	2.98	21.76	21.76	3.35
	57 (13.9)	27.51	27.51	1.97	26.51	26.51	2.17	25.45	25.45	2.40	24.30	24.30	2.66	23.07	23.07	2.98	21.73	21.73	3.35
1000	72 (22.2)	34.79	18.95	2.01	33.19	18.37	2.21	31.51	17.78	2.44	29.73	17.16	2.71	27.85	16.51	3.03	25.85	15.82	3.40
	67 (19.4)	31.61	23.69	2.01	30.13	23.11	2.21	28.60	22.50	2.44	26.98	21.87	2.71	25.25	21.19	3.03	23.42	20.49	3.40
	63 (17.2)††	29.34	22.73	2.02	27.97	22.14	2.22	26.53	21.53	2.45	25.01	20.89	2.71	23.40	20.21	3.03	21.68	19.49	3.40
	62 (16.7)	28.87	28.71	2.01	27.71	27.71	2.22	26.56	26.56	2.45	25.33	25.33	2.71	24.00	24.00	3.03	22.57	22.57	3.40
	57 (13.9)	28.75	28.75	2.01	27.66	27.66	2.22	26.52	26.52	2.45	25.29	25.29	2.71	23.97	23.97	3.03	22.54	22.54	3.40
1125	72 (22.2)	35.24	19.93	2.06	33.57	19.35	2.26	31.84	18.74	2.49	30.02	18.11	2.76	28.08	17.45	3.08	26.02	16.75	3.45
	67 (19.4)	32.05	25.24	2.06	30.53	24.64	2.26	28.94	24.02	2.49	27.27	23.37	2.76	25.51	22.69	3.08	23.63	21.95	3.45
	63 (17.2)††	29.77	24.16	2.06	28.34	23.56	2.26	26.86	22.94	2.49	25.30	22.28	2.76	23.65	21.59	3.08	21.90	20.83	3.45
	62 (16.7)	29.83	29.83	2.06	28.67	28.67	2.26	27.45	27.45	2.49	26.15	26.15	2.76	24.74	24.74	3.07	23.23	23.23	3.45
	57 (13.9)	29.79	29.79	2.06	28.63	28.63	2.26	27.41	27.41	2.49	26.11	26.11	2.76	24.71	24.71	3.07	23.20	23.20	3.45

Manufacturer reserves the right to change, at any time, specifications and designs without notice and without obligations.

DETAILED COOLING CAPACITIES# -COPPER COIL MODELS (CONTINUED)

EVAPORATOR AIR		CONDENSER ENTERING AIR TEMPERATURES °F (°C)																	
		75 (23.9)		85 (29.4)			95 (35)			105 (40.6)			115 (46.1)			125 (51.7)			
CFM	EWB °F (°C)	Capacity MBtuh Total	Capacity MBtuh Sens‡	Total System KW**	Capacity MBtuh Total	Capacity MBtuh Sens‡	Total System KW**	Capacity MBtuh Total	Capacity MBtuh Sens‡	Total System KW**	Capacity MBtuh Total	Capacity MBtuh Sens‡	Total System KW**	Capacity MBtuh Total	Capacity MBtuh Sens‡	Total System KW**	Capacity MBtuh Total	Capacity MBtuh Sens‡	Total System KW**
BA14NA3600G-A Outdoor Section With CAP3721AL* Indoor Section**																			
1050	72 (22.2)	40.58	21.42	2.31	38.93	20.83	2.59	36.79	20.08	2.87	34.42	19.25	3.18	32.00	18.42	3.55	29.66	17.62	4.03
	67 (19.4)	37.70	26.94	2.31	36.20	26.34	2.58	34.20	25.55	2.85	31.97	24.68	3.15	29.69	23.80	3.52	27.50	22.96	4.00
	63 (17.2)††	35.48	26.09	2.32	34.08	25.48	2.59	32.18	24.68	2.85	30.06	23.78	3.15	27.86	22.87	3.52	25.83	22.03	3.99
	62 (16.7)	34.87	32.22	2.32	33.53	31.59	2.59	31.73	31.66	2.85	29.96	29.96	3.14	28.15	28.15	3.51	26.42	26.42	3.99
	57 (13.9)	34.27	34.27	2.33	33.16	33.16	2.59	31.65	31.65	2.85	29.92	29.92	3.14	28.11	28.11	3.51	26.38	26.38	3.99
1200	72 (22.2)	40.97	22.55	2.37	39.26	21.96	2.65	37.06	21.19	2.93	34.63	20.36	3.24	32.16	19.53	3.61	29.77	18.73	4.09
	67 (19.4)	38.15	28.79	2.37	36.60	28.19	2.64	34.54	27.39	2.91	32.25	26.51	3.21	29.93	25.62	3.58	27.69	24.75	4.06
	63 (17.2)††	35.99	27.83	2.38	34.54	27.22	2.64	32.59	26.40	2.91	30.39	25.49	3.21	28.15	24.56	3.58	26.06	23.69	4.05
	62 (16.7)	35.60	35.60	2.38	34.41	34.41	2.64	32.77	32.77	2.90	30.93	30.93	3.21	29.01	29.01	3.58	27.15	27.15	4.05
	57 (13.9)	35.56	35.56	2.38	34.36	34.36	2.64	32.73	32.73	2.90	30.89	30.89	3.21	28.97	28.97	3.58	27.12	27.12	4.05
1350	72 (22.2)	41.20	23.64	2.43	39.44	23.04	2.71	37.20	22.28	2.99	34.73	21.45	3.30	32.22	20.61	3.68	29.79	19.80	4.15
	67 (19.4)	38.46	30.60	2.43	36.86	29.99	2.70	34.76	29.18	2.97	32.44	28.28	3.27	30.09	27.36	3.64	27.84	26.42	4.12
	63 (17.2)††	36.36	29.53	2.43	34.86	28.90	2.70	32.86	28.07	2.96	30.64	27.14	3.27	28.36	26.18	3.64	26.26	26.02	4.11
	62 (16.7)	36.61	36.61	2.43	35.33	35.33	2.70	33.60	33.60	2.96	31.66	31.66	3.27	29.66	29.66	3.64	27.70	27.70	4.12
	57 (13.9)	36.57	36.57	2.43	35.29	35.29	2.70	33.57	33.57	2.96	31.63	31.63	3.27	29.63	29.63	3.64	27.67	27.67	4.12
BA14NA4200G-A Outdoor Section With CAP4321AL* Indoor Section**																			
1225	72 (22.2)	46.79	25.57	2.60	44.65	24.77	2.86	42.40	23.95	3.15	40.04	23.09	3.47	37.52	22.19	3.84	34.83	21.24	4.26
	67 (19.4)	42.38	31.68	2.61	40.45	30.89	2.86	38.42	30.07	3.15	36.27	29.20	3.47	33.99	28.29	3.84	31.54	27.32	4.25
	63 (17.2)††	39.24	30.38	2.61	37.46	29.59	2.86	35.58	28.77	3.15	33.58	27.91	3.47	31.47	26.99	3.83	29.19	26.02	4.24
	62 (16.7)	38.60	37.63	2.61	36.93	36.70	2.86	35.35	35.35	3.14	33.75	33.75	3.47	32.02	32.02	3.83	30.14	30.14	4.24
	57 (13.9)	38.17	38.17	2.61	36.78	36.78	2.86	35.29	35.29	3.14	33.70	33.70	3.47	31.98	31.98	3.83	30.10	30.10	4.24
1400	72 (22.2)	47.55	27.01	2.67	45.33	26.20	2.93	42.99	25.37	3.21	40.52	24.49	3.54	37.91	23.57	3.91	35.15	22.61	4.32
	67 (19.4)	43.11	33.98	2.67	41.10	33.17	2.93	38.99	32.32	3.21	36.77	31.44	3.54	34.41	30.50	3.90	31.91	29.50	4.32
	63 (17.2)††	39.94	32.51	2.67	38.08	31.70	2.93	36.14	30.86	3.21	34.06	29.97	3.54	31.88	29.03	3.90	29.56	28.02	4.31
	62 (16.7)	39.87	39.87	2.67	38.37	38.37	2.93	36.76	36.76	3.21	35.04	35.04	3.54	33.19	33.19	3.90	31.17	31.17	4.32
	57 (13.9)	39.81	39.81	2.67	38.31	38.31	2.93	36.71	36.71	3.21	34.99	34.99	3.54	33.14	33.14	3.90	31.13	31.13	4.31
1575	72 (22.2)	48.11	28.39	2.74	45.80	27.57	2.99	43.39	26.72	3.28	40.85	25.83	3.61	38.17	24.91	3.98	35.33	23.93	4.39
	67 (19.4)	43.66	36.19	2.74	41.58	35.36	2.99	39.41	34.49	3.28	37.13	33.57	3.60	34.73	32.60	3.97	32.20	31.50	4.38
	63 (17.2)††	40.46	34.55	2.74	38.54	33.72	2.99	36.53	32.85	3.28	34.42	31.93	3.60	32.20	30.94	3.97	29.88	29.72	4.38
	62 (16.7)	41.18	41.18	2.74	39.58	39.58	2.99	37.88	37.88	3.28	36.06	36.06	3.60	34.10	34.10	3.97	31.98	31.98	4.38
	57 (13.9)	41.12	41.12	2.74	39.53	39.53	2.99	37.83	37.83	3.28	36.01	36.01	3.60	34.05	34.05	3.97	31.94	31.94	4.38
BA14NA04800G-A Outdoor Section With CAP6124AL* Indoor Section**																			
1400	72 (22.2)	53.91	26.70	3.12	51.70	25.95	3.46	49.29	25.14	3.81	46.61	24.25	4.20	43.50	23.23	4.66	39.94	22.07	5.22
	67 (19.4)	49.07	33.08	3.15	47.03	32.30	3.47	44.83	31.48	3.81	42.36	30.56	4.19	39.52	29.52	4.65	36.26	28.33	5.22
	63 (17.2)††	45.60	31.80	3.16	43.67	31.02	3.48	41.61	30.19	3.81	39.31	29.27	4.18	36.66	28.22	4.64	33.61	27.02	5.22
	62 (16.7)	44.81	39.26	3.16	42.96	38.43	3.48	41.03	40.90	3.80	39.14	39.14	4.18	36.99	36.99	4.64	34.49	34.49	5.22
	57 (13.9)	44.02	44.02	3.16	42.51	42.51	3.48	40.91	40.91	3.80	39.08	39.08	4.18	36.94	36.94	4.64	34.44	34.44	5.22
1600	72 (22.2)	54.74	28.18	3.20	52.46	27.42	3.54	49.97	26.60	3.89	47.17	25.68	4.28	43.95	24.64	4.74	40.30	23.48	5.30
	67 (19.4)	49.91	35.43	3.22	47.78	34.64	3.55	45.50	33.80	3.89	42.95	32.87	4.27	40.01	31.79	4.73	36.67	30.58	5.30
	63 (17.2)††	46.41	33.99	3.23	44.41	33.19	3.55	42.28	32.35	3.89	39.89	31.40	4.26	37.15	30.32	4.72	34.04	29.09	5.30
	62 (16.7)	45.97	45.97	3.23	44.36	44.36	3.55	42.62	42.62	3.89	40.65	40.65	4.27	38.35	38.35	4.73	35.68	35.68	5.30
	57 (13.9)	45.90	45.90	3.23	44.29	44.29	3.55	42.56	42.56	3.89	40.59	40.59	4.27	38.30	38.30	4.73	35.63	35.63	5.30
1800	72 (22.2)	55.35	29.59	3.27	53.00	28.82	3.62	50.43	27.99	3.97	47.55	27.07	4.35	44.26	26.02	4.82	40.51	24.83	5.38
	67 (19.4)	50.51	37.70	3.29	48.34	36.90	3.63	45.99	36.05	3.97	43.37	35.09	4.35	40.38	33.98	4.81	37.00	32.68	5.38
	63 (17.2)††	47.02	36.10	3.31	44.97	35.29	3.63	42.77	34.42	3.97	40.33	33.45	4.34	37.54	32.33	4.81	34.39	30.98	5.38
	62 (16.7)	47.51	47.51	3.31	45.80	45.80	3.63	43.96	43.96	3.97	41.87	41.87	4.35	39.44	39.44	4.81	36.63	36.63	5.38
	57 (13.9)	47.45	47.45	3.31	45.74	45.74	3.63	43.91	43.91	3.97	41.82	41.82	4.35	39.40	39.40	4.81	36.58	36.58	5.38

Manufacturer reserves the right to change, at any time, specifications and designs without notice and without obligations.

DETAILED COOLING CAPACITIES# -COPPER COIL MODELS (CONTINUED)

EVAPORATOR AIR		CONDENSER ENTERING AIR TEMPERATURES °F (°C)																	
		75 (23.9)		85 (29.4)			95 (35)			105 (40.6)			115 (46.1)			125 (51.7)			
CFM	EWB °F (°C)	Capacity MBtuh Total	Capacity MBtuh Sens‡	Total System KW**	Capacity MBtuh Total	Capacity MBtuh Sens‡	Total System KW**	Capacity MBtuh Total	Capacity MBtuh Sens‡	Total System KW**	Capacity MBtuh Total	Capacity MBtuh Sens‡	Total System KW**	Capacity MBtuh Total	Capacity MBtuh Sens‡	Total System KW**	Capacity MBtuh Total	Capacity MBtuh Sens‡	Total System KW**
BA14NA06000G-A Outdoor Section With CAP**6024AL* Indoor Section																			
1750	72 (22.2)	68.41	35.82	4.01	65.35	34.67	4.39	62.15	33.49	4.86	58.70	32.23	5.39	55.01	30.89	5.96	50.87	29.41	6.55
	67 (19.4)	62.24	44.04	4.01	59.41	42.88	4.38	56.50	41.69	4.83	53.38	40.43	5.35	50.00	39.08	5.91	46.23	37.59	6.49
	63 (17.2)††	57.78	42.37	4.02	55.13	41.19	4.37	52.41	39.99	4.81	49.54	38.75	5.32	46.39	37.40	5.87	42.89	35.91	6.45
	62 (16.7)	56.92	52.17	4.02	54.40	50.96	4.37	51.84	49.69	4.81	49.16	49.16	5.32	46.64	46.64	5.88	43.73	43.73	6.46
	57 (13.9)	55.64	55.64	4.02	53.56	53.56	4.37	51.43	51.43	4.81	49.13	49.13	5.32	46.56	46.56	5.88	43.68	43.68	6.46
2000	72 (22.2)	69.54	37.55	4.10	66.36	36.39	4.49	63.04	35.18	4.96	59.50	33.91	5.49	55.63	32.53	6.06	51.36	31.03	6.66
	67 (19.4)	63.30	46.83	4.11	60.35	45.64	4.47	57.34	44.44	4.93	54.11	43.16	5.45	50.61	41.77	6.01	46.74	40.24	6.60
	63 (17.2)††	58.79	44.95	4.11	56.04	43.76	4.47	53.23	42.55	4.91	50.24	41.27	5.42	47.00	39.89	5.98	43.39	38.33	6.56
	62 (16.7)	58.25	55.83	4.11	55.72	55.33	4.47	53.37	53.37	4.91	50.91	50.91	5.43	48.16	48.16	5.99	45.09	45.09	6.58
	57 (13.9)	57.80	57.80	4.11	55.59	55.59	4.47	53.30	53.30	4.91	50.84	50.84	5.43	48.11	48.11	5.99	45.03	45.03	6.58
2250	72 (22.2)	70.37	39.17	4.20	67.10	37.99	4.59	63.67	36.77	5.06	60.02	35.48	5.59	56.04	34.08	6.17	51.66	32.55	6.76
	67 (19.4)	64.08	49.47	4.20	61.08	48.28	4.57	57.95	47.04	5.03	54.64	45.73	5.55	51.07	44.31	6.12	47.12	42.69	6.70
	63 (17.2)††	59.56	47.41	4.20	56.73	46.20	4.56	53.82	44.95	5.01	50.77	43.65	5.52	47.44	42.21	6.08	43.78	40.57	6.66
	62 (16.7)	59.69	59.69	4.20	57.32	57.32	4.56	54.90	54.90	5.02	52.28	52.28	5.53	49.41	49.41	6.10	46.17	46.17	6.69
	57 (13.9)	59.58	59.58	4.20	57.25	57.25	4.56	54.83	54.83	5.02	52.23	52.23	5.53	49.35	49.35	6.10	46.12	46.12	6.69

† Total and sensible capacities are net capacities. Blower motor heat has been subtracted.

‡ Sensible capacities shown are based on 80°F (27°C) entering air at the indoor coil. For sensible capacities at other than 80°F (27°C), deduct 835 Btuh (245 kW) per 1000 CFM (480 L/S) of indoor coil air for each degree below 80°F (27°C), or add 835 Btuh (245 kW) per 1000 CFM (480 L/S) of indoor coil air per degree above 80°F (27°C).

Detailed cooling capacities are based on indoor and outdoor unit at the same elevation per AHRI standard 210/240-2008. If additional tubing length and/or indoor unit is located above outdoor unit, a slight variation in capacity may occur.

** System kw is total of indoor and outdoor unit kilowatts.

†† At TVA rating indoor condition (75°F edb/63°F ewb). All other indoor air temperatures are at 80°F edb.

NOTE: When the required data falls between the published data, interpolation may be performed. Extrapolation is not an acceptable practice.

EWB — Entering Wet Bulb

Manufacturer reserves the right to change, at any time, specifications and designs without notice and without obligations.

DETAILED COOLING CAPACITIES# -ALUMINUM COIL MODELS

EVAPORATOR AIR		CONDENSER ENTERING AIR TEMPERATURES °F (°C)																	
		75 (23.9)			85 (29.4)			95 (35)			105 (40.6)			115 (46.1)			125 (51.7)		
CFM	EWB	Capacity MBtuh		Total System KW**	Capacity MBtuh		Total System KW**	Capacity MBtuh		Total System KW**	Capacity MBtuh		Total System KW**	Capacity MBtuh		Total System KW**	Capacity MBtuh		Total System KW**
		Total	Sens‡		Total	Sens‡		Total	Sens‡		Total	Sens‡		Total	Sens‡		Total	Sens‡	
BA14NA1800L-A Outdoor Section With CAP1917AL* Indoor Section**																			
525	72 (22.2)	20.72	10.30	1.17	19.94	10.02	1.32	19.05	9.71	1.48	18.06	9.36	1.68	16.95	8.98	1.90	15.70	8.56	2.16
	67 (19.4)	18.85	12.65	1.18	18.04	12.34	1.33	17.18	12.00	1.50	16.23	11.64	1.69	15.18	11.24	1.91	14.01	10.81	2.17
	63 (17.2)††	17.47	12.17	1.19	16.68	11.83	1.34	15.83	11.49	1.51	14.92	11.11	1.70	13.92	10.71	1.93	12.81	10.26	2.19
	62 (16.7)	17.12	14.94	1.20	16.33	14.60	1.34	15.52	14.24	1.51	14.67	14.67	1.70	13.89	13.89	1.92	13.03	13.03	2.18
	57 (13.9)	16.60	16.60	1.20	15.99	15.99	1.34	15.34	15.34	1.51	14.64	14.64	1.70	13.87	13.87	1.92	13.00	13.00	2.18
600	72 (22.2)	21.10	10.86	1.19	20.29	10.58	1.34	19.39	10.27	1.51	18.37	9.93	1.70	17.21	9.54	1.92	15.93	9.12	2.18
	67 (19.4)	19.21	13.56	1.21	18.39	13.25	1.35	17.50	12.91	1.52	16.52	12.54	1.71	15.43	12.14	1.94	14.23	11.70	2.20
	63 (17.2)††	17.84	13.02	1.22	17.01	12.68	1.37	16.15	12.33	1.53	15.20	11.95	1.73	14.17	11.53	1.95	13.02	11.08	2.22
	62 (16.7)	17.53	16.16	1.22	16.76	16.76	1.37	16.07	16.07	1.53	15.33	15.33	1.72	14.50	14.50	1.94	13.59	13.59	2.20
	57 (13.9)	17.38	17.38	1.22	16.73	16.73	1.37	16.05	16.05	1.53	15.30	15.30	1.72	14.48	14.48	1.95	13.56	13.56	2.20
675	72 (22.2)	21.36	11.40	1.22	20.55	11.13	1.37	19.62	10.82	1.54	18.58	10.48	1.73	17.40	10.09	1.95	16.08	9.66	2.21
	67 (19.4)	19.48	14.44	1.23	18.65	14.13	1.38	17.74	13.79	1.55	16.74	13.42	1.74	15.63	13.01	1.96	14.41	12.56	2.22
	63 (17.2)††	18.11	13.84	1.25	17.27	13.50	1.39	16.38	13.14	1.56	15.41	12.76	1.75	14.36	12.34	1.98	13.19	11.87	2.24
	62 (16.7)	18.05	18.05	1.24	17.38	17.38	1.39	16.66	16.66	1.55	15.88	15.88	1.75	15.02	15.02	1.97	14.05	14.05	2.23
	57 (13.9)	18.02	18.02	1.24	17.35	17.35	1.39	16.64	16.64	1.56	15.86	15.86	1.75	14.99	14.99	1.97	14.03	14.03	2.23
BA14NA24A00L-A Outdoor Section With CAP2517AL* Indoor Section**																			
700	72 (22.2)	27.57	14.08	1.58	26.45	13.68	1.77	25.23	13.26	1.99	23.93	12.80	2.25	22.50	12.31	2.54	20.87	11.76	2.88
	67 (19.4)	25.27	17.49	1.60	24.22	17.08	1.78	23.08	16.63	2.00	21.83	16.15	2.25	20.45	15.63	2.55	18.90	15.04	2.89
	63 (17.2)††	23.61	16.89	1.61	22.61	16.46	1.79	21.50	16.00	2.01	20.29	15.49	2.26	18.93	14.93	2.56	17.47	14.34	2.90
	62 (16.7)	23.17	20.80	1.61	22.20	20.36	1.79	21.14	19.86	2.01	20.07	20.07	2.26	18.99	18.99	2.56	17.81	17.81	2.89
	57 (13.9)	22.65	22.65	1.61	21.86	21.86	1.79	20.99	20.99	2.01	20.03	20.03	2.26	18.96	18.96	2.56	17.78	17.78	2.89
800	72 (22.2)	27.58	14.71	1.61	26.81	14.45	1.80	25.55	14.02	2.03	24.19	13.56	2.28	22.74	13.07	2.58	21.07	12.52	2.92
	67 (19.4)	25.66	18.73	1.63	24.58	18.31	1.82	23.40	17.86	2.03	22.12	17.38	2.29	20.72	16.85	2.59	19.13	16.26	2.93
	63 (17.2)††	24.01	18.04	1.64	22.98	17.61	1.83	21.84	17.14	2.04	20.60	16.64	2.30	19.21	16.07	2.60	17.71	15.47	2.94
	62 (16.7)	23.68	23.55	1.64	22.79	22.79	1.83	21.87	21.87	2.04	20.85	20.85	2.29	19.72	19.72	2.59	18.47	18.47	2.93
	57 (13.9)	23.58	23.58	1.64	22.75	22.75	1.83	21.83	21.83	2.04	20.82	20.82	2.29	19.70	19.70	2.59	18.44	18.44	2.93
900	72 (22.2)	28.08	15.55	1.65	27.05	15.20	1.84	25.76	14.76	2.06	24.37	14.30	2.32	22.89	13.82	2.62	21.20	13.27	2.96
	67 (19.4)	25.92	19.92	1.66	24.84	19.52	1.85	23.64	19.06	2.07	22.34	18.57	2.33	20.92	18.04	2.62	19.32	17.43	2.96
	63 (17.2)††	24.31	19.16	1.68	23.25	18.73	1.86	22.09	18.26	2.08	20.83	17.75	2.33	19.42	17.17	2.63	17.90	16.53	2.97
	62 (16.7)	24.39	24.39	1.68	23.51	23.51	1.86	22.54	22.54	2.08	21.49	21.49	2.33	20.33	20.33	2.63	19.01	19.01	2.96
	57 (13.9)	24.35	24.35	1.68	23.48	23.48	1.86	22.51	22.51	2.08	21.46	21.46	2.33	20.30	20.30	2.63	18.98	18.98	2.96
BA14NA3000L-A Outdoor Section With CAP3721AL* Indoor Section**																			
875	72 (22.2)	35.32	18.09	1.96	33.79	17.54	2.16	32.16	16.97	2.41	30.40	16.37	2.69	28.49	15.71	3.03	26.37	14.99	3.42
	67 (19.4)	32.05	22.35	1.97	30.63	21.79	2.18	29.13	21.21	2.42	27.54	20.59	2.71	25.77	19.92	3.04	23.83	19.19	3.43
	63 (17.2)††	29.73	21.47	1.98	28.40	20.91	2.19	27.00	20.32	2.43	25.49	19.70	2.72	23.84	19.02	3.06	22.01	18.28	3.44
	62 (16.7)	29.19	26.49	1.98	27.91	25.91	2.19	26.59	26.50	2.43	25.35	25.35	2.72	24.02	24.02	3.05	22.54	22.54	3.44
	57 (13.9)	28.61	28.61	1.98	27.59	27.59	2.19	26.50	26.50	2.43	25.31	25.31	2.72	23.98	23.98	3.05	22.50	22.50	3.44
1000	72 (22.2)	35.92	19.11	2.00	34.32	18.56	2.21	32.63	17.98	2.45	30.81	17.36	2.74	28.82	16.70	3.08	26.64	15.98	3.46
	67 (19.4)	32.62	23.96	2.02	31.15	23.39	2.22	29.60	22.80	2.47	27.94	22.17	2.75	26.12	21.49	3.09	24.12	20.73	3.48
	63 (17.2)††	30.28	22.97	2.03	28.90	22.40	2.23	27.45	21.80	2.48	25.89	21.16	2.77	24.18	20.47	3.10	22.30	19.70	3.49
	62 (16.7)	29.93	29.93	2.03	28.86	28.70	2.23	27.64	27.64	2.48	26.36	26.36	2.76	24.94	24.94	3.10	23.36	23.36	3.48
	57 (13.9)	29.87	29.87	2.03	28.77	28.77	2.23	27.59	27.59	2.48	26.32	26.32	2.76	24.91	24.91	3.10	23.33	23.33	3.48
1125	72 (22.2)	36.34	20.10	2.05	34.70	19.54	2.25	32.96	18.96	2.50	31.08	18.34	2.79	29.03	17.66	3.12	26.80	16.93	3.51
	67 (19.4)	33.06	25.53	2.06	31.55	24.95	2.27	29.95	24.35	2.51	28.24	23.70	2.80	26.39	23.00	3.14	24.36	22.21	3.52
	63 (17.2)††	30.70	24.43	2.07	29.28	23.84	2.28	27.79	23.23	2.53	26.19	22.58	2.81	24.44	21.86	3.15	22.55	21.04	3.54
	62 (16.7)	30.97	30.97	2.07	29.80	29.80	2.28	28.55	28.55	2.52	27.20	27.20	2.81	25.70	25.70	3.14	24.04	24.04	3.53
	57 (13.9)	30.92	30.92	2.07	29.75	29.75	2.28	28.51	28.51	2.52	27.17	27.17	2.81	25.67	25.67	3.14	24.01	24.01	3.53

Manufacturer reserves the right to change, at any time, specifications and designs without notice and without obligations.

DETAILED COOLING CAPACITIES# -ALUMINUM COIL MODELS (Continued)

EVAPORATOR AIR		CONDENSER ENTERING AIR TEMPERATURES °F (°C)																	
		75 (23.9)			85 (29.4)			95 (35)			105 (40.6)			115 (46.1)			125 (51.7)		
CFM	EWB	Capacity MBtuh		Total System KW**	Capacity MBtuh		Total System KW**	Capacity MBtuh		Total System KW**	Capacity MBtuh		Total System KW**	Capacity MBtuh		Total System KW**	Capacity MBtuh		Total System KW**
		Total	Sens‡		Total	Sens‡		Total	Sens‡		Total	Sens‡		Total	Sens‡		Total	Sens‡	
BA14NA36A00L-A Outdoor Section With CAP3721AL* Indoor Section**																			
1075	72 (22.2)	41.11	21.09	2.36	39.28	20.45	2.61	37.28	19.77	2.87	35.16	19.05	3.17	32.95	18.30	3.55	30.61	17.53	4.02
	67 (19.4)	37.75	26.33	2.35	36.07	25.68	2.59	34.20	24.97	2.85	32.21	24.21	3.15	30.12	23.42	3.52	27.93	22.61	3.99
	63 (17.2)††	35.28	25.40	2.35	33.68	24.73	2.59	31.92	24.00	2.84	30.03	23.23	3.14	28.01	22.41	3.52	25.96	21.58	3.99
	62 (16.7)	34.73	31.40	2.35	33.20	30.68	2.59	31.57	31.57	2.84	30.03	30.03	3.14	28.39	28.39	3.51	26.68	26.68	3.99
	57 (13.9)	34.19	34.19	2.35	32.93	32.93	2.59	31.52	31.52	2.84	29.99	29.99	3.14	28.34	28.34	3.51	26.64	26.64	3.99
1200	72 (22.2)	41.54	22.03	2.41	39.66	21.40	2.66	37.62	20.71	2.92	35.44	19.98	3.22	33.18	19.23	3.60	30.80	18.45	4.07
	67 (19.4)	38.21	27.85	2.40	36.47	27.19	2.64	34.56	26.47	2.90	32.53	25.70	3.20	30.41	24.91	3.57	28.18	24.08	4.04
	63 (17.2)††	35.75	26.81	2.40	34.11	26.14	2.63	32.30	25.40	2.89	30.36	24.62	3.19	28.31	23.79	3.56	26.22	22.94	4.03
	62 (16.7)	35.51	33.03	2.40	34.03	34.03	2.63	32.54	32.54	2.89	30.92	30.92	3.19	29.21	29.21	3.56	27.41	27.41	4.04
	57 (13.9)	35.32	35.32	2.40	33.98	33.98	2.63	32.49	32.49	2.89	30.88	30.88	3.19	29.17	29.17	3.56	27.37	27.37	4.04
1350	72 (22.2)	41.91	23.13	2.47	39.99	22.49	2.72	37.89	21.79	2.98	35.67	21.06	3.28	33.35	20.30	3.66	30.94	19.52	4.13
	67 (19.4)	38.62	29.63	2.45	36.84	28.96	2.70	34.89	28.23	2.96	32.82	27.45	3.26	30.67	26.63	3.63	28.42	25.75	4.10
	63 (17.2)††	36.18	28.46	2.45	34.51	27.79	2.69	32.65	27.03	2.95	30.68	26.23	3.25	28.60	25.37	3.62	26.49	24.45	4.09
	62 (16.7)	36.49	36.49	2.45	35.08	35.08	2.69	33.50	33.50	2.95	31.80	31.80	3.25	30.02	30.02	3.62	28.12	28.12	4.10
	57 (13.9)	36.44	36.44	2.45	35.03	35.03	2.69	33.45	33.45	2.95	31.76	31.76	3.25	29.98	29.98	3.62	28.09	28.09	4.10
BA14NA4200L-A Outdoor Section With CAP4321AL* Indoor Section**																			
1200	72 (22.2)	49.34	25.98	2.82	47.26	25.22	3.10	45.13	24.44	3.43	42.71	23.58	3.78	40.21	22.69	4.19	37.54	21.75	4.64
	67 (19.4)	44.89	31.51	2.81	43.00	30.75	3.10	41.00	29.94	3.42	38.88	29.09	3.78	36.60	28.19	4.18	34.16	27.24	4.64
	63 (17.2)††	41.69	30.35	2.81	39.94	29.58	3.09	38.09	28.78	3.41	36.10	27.92	3.77	33.98	27.02	4.18	31.71	26.07	4.64
	62 (16.7)	40.99	36.93	2.81	39.30	36.14	3.09	37.51	35.30	3.41	35.64	35.34	3.77	33.84	33.84	4.18	32.01	32.01	4.64
	57 (13.9)	39.79	39.79	2.81	38.46	38.46	3.09	37.02	37.02	3.41	35.47	35.47	3.77	33.79	33.79	4.18	31.96	31.96	4.64
1400	72 (22.2)	50.58	27.74	2.89	48.39	26.96	3.18	46.07	26.14	3.50	43.61	25.28	3.86	41.00	24.37	4.27	38.22	23.42	4.72
	67 (19.4)	46.10	34.17	2.89	44.11	33.38	3.17	42.02	32.56	3.49	39.78	31.68	3.86	37.41	30.76	4.26	34.88	29.78	4.72
	63 (17.2)††	42.85	32.83	2.89	41.01	32.04	3.17	39.06	31.22	3.49	36.99	30.35	3.85	34.78	29.42	4.26	32.42	28.44	4.71
	62 (16.7)	42.37	40.37	2.89	40.67	40.55	3.17	39.06	39.06	3.49	37.37	37.37	3.85	35.54	35.54	4.26	33.56	33.56	4.71
	57 (13.9)	42.03	42.03	2.89	40.57	40.57	3.17	39.01	39.01	3.49	37.32	37.32	3.85	35.49	35.49	4.26	33.52	33.52	4.71
1575	72 (22.2)	51.40	29.21	2.96	49.14	28.42	3.24	46.74	27.59	3.57	44.21	26.71	3.93	41.52	25.80	4.33	38.67	24.84	4.79
	67 (19.4)	46.92	36.41	2.96	44.87	35.61	3.24	42.69	34.76	3.56	40.40	33.87	3.92	37.96	32.92	4.33	35.38	31.91	4.78
	63 (17.2)††	43.65	34.92	2.96	41.74	34.12	3.24	39.73	33.27	3.56	37.61	32.38	3.92	35.34	31.42	4.32	32.94	30.39	4.78
	62 (16.7)	43.70	43.70	2.96	42.14	42.14	3.24	40.47	40.47	3.56	38.67	38.67	3.92	36.74	36.74	4.33	34.64	34.64	4.78
	57 (13.9)	43.64	43.64	2.96	42.08	42.08	3.24	40.41	40.41	3.56	38.63	38.63	3.92	36.70	36.70	4.33	34.60	34.60	4.78
BA14NA4800L-A Outdoor Section With CAP6124AL* Indoor Section**																			
1400	72 (22.2)	53.43	27.22	3.17	51.09	26.41	3.52	48.63	25.57	3.87	46.01	24.68	4.26	43.19	23.74	4.72	40.13	22.73	5.26
	67 (19.4)	49.05	33.96	3.17	46.86	33.12	3.51	44.55	32.24	3.85	42.11	31.31	4.24	39.47	30.32	4.69	36.62	29.26	5.24
	63 (17.2)††	45.80	32.74	3.17	43.72	31.87	3.49	41.54	30.98	3.83	39.23	30.03	4.22	36.74	29.03	4.67	34.04	27.94	5.23
	62 (16.7)	45.16	40.47	3.17	43.17	39.54	3.49	41.11	41.11	3.83	39.23	39.23	4.22	37.18	37.18	4.68	34.95	34.95	5.23
	57 (13.9)	44.45	44.45	3.17	42.79	42.79	3.49	41.05	41.05	3.83	39.17	39.17	4.22	37.13	37.13	4.68	34.90	34.90	5.23
1550	72 (22.2)	53.95	28.34	3.23	51.56	27.53	3.58	49.04	26.67	3.93	46.36	25.79	4.32	43.48	24.84	4.78	40.37	23.82	5.32
	67 (19.4)	49.61	35.76	3.23	47.36	34.91	3.57	45.00	34.02	3.91	42.49	33.08	4.30	39.81	32.08	4.75	36.93	31.00	5.30
	63 (17.2)††	46.37	34.42	3.23	44.24	33.54	3.56	42.01	32.63	3.90	39.64	31.68	4.28	37.09	30.65	4.74	34.36	29.54	5.29
	62 (16.7)	45.98	45.68	3.23	44.13	44.13	3.56	42.29	42.29	3.90	40.32	40.32	4.28	38.17	38.17	4.74	35.83	35.83	5.29
	57 (13.9)	45.81	45.81	3.23	44.07	44.07	3.56	42.23	42.23	3.90	40.26	40.26	4.28	38.12	38.12	4.74	35.79	35.79	5.29
1800	72 (22.2)	54.55	30.12	3.32	52.09	29.31	3.68	49.49	28.45	4.04	46.74	27.56	4.43	43.78	26.60	4.88	40.59	25.57	5.42
	67 (19.4)	50.28	38.66	3.33	47.97	37.79	3.67	45.55	36.88	4.02	43.00	35.92	4.40	40.26	34.87	4.86	37.35	33.71	5.40
	63 (17.2)††	47.08	37.11	3.33	44.88	36.22	3.66	42.58	35.29	4.00	40.16	34.30	4.38	37.57	33.22	4.84	34.82	31.98	5.39
	62 (16.7)	47.71	47.71	3.33	45.83	45.83	3.66	43.86	43.86	4.01	41.76	41.76	4.39	39.48	39.48	4.85	36.99	36.99	5.40
	57 (13.9)	47.63	47.63	3.33	45.77	45.77	3.66	43.81	43.81	4.01	41.71	41.71	4.39	39.43	39.43	4.85	36.95	36.95	5.40

Manufacturer reserves the right to change, at any time, specifications and designs without notice and without obligations.

DETAILED COOLING CAPACITIES# -ALUMINUM COIL MODELS (Continued)

EVAPORATOR AIR		CONDENSER ENTERING AIR TEMPERATURES °F (°C)																	
		75 (23.9)			85 (29.4)			95 (35)			105 (40.6)			115 (46.1)			125 (51.7)		
CFM	EWB	Capacity MBtuh		Total System KW**	Capacity MBtuh		Total System KW**	Capacity MBtuh		Total System KW**	Capacity MBtuh		Total System KW**	Capacity MBtuh		Total System KW**	Capacity MBtuh		Total System KW**
		Total	Sens‡		Total	Sens‡		Total	Sens‡		Total	Sens‡		Total	Sens‡		Total	Sens‡	
BA14NA6000L-A Outdoor Section With CAP**6024AL* Indoor Section																			
1750	72 (22.2)	67.42	35.02	4.04	64.52	33.96	4.45	61.45	32.85	4.91	58.17	31.68	5.42	54.67	30.44	6.00	50.71	29.06	6.64
	67 (19.4)	61.43	43.22	4.02	58.77	42.14	4.42	56.00	41.04	4.87	53.01	39.86	5.38	49.80	38.58	5.96	46.36	37.25	6.61
	63 (17.2)††	57.05	41.56	3.99	54.64	40.52	4.39	52.04	39.39	4.84	49.25	38.21	5.35	46.25	36.94	5.93	43.01	35.58	6.58
	62 (16.7)	56.38	51.25	3.99	54.08	50.14	4.39	51.64	48.91	4.84	49.06	49.06	5.35	46.64	46.64	5.94	43.94	43.94	6.59
	57 (13.9)	55.28	55.28	3.99	53.36	53.36	4.39	51.28	51.28	4.84	49.03	49.03	5.35	46.57	46.57	5.94	43.89	43.89	6.59
2000	72 (22.2)	68.42	36.73	4.15	65.43	35.65	4.55	62.24	34.52	5.01	58.85	33.33	5.53	55.23	32.08	6.11	51.32	30.73	6.75
	67 (19.4)	62.43	45.99	4.12	59.67	44.90	4.52	56.79	43.76	4.98	53.69	42.55	5.49	50.40	41.26	6.07	46.86	39.87	6.72
	63 (17.2)††	58.03	44.14	4.10	55.48	43.05	4.50	52.80	41.92	4.95	49.93	40.70	5.46	46.84	39.40	6.04	43.52	37.98	6.69
	62 (16.7)	57.72	54.75	4.10	55.79	52.44	4.50	53.15	53.15	4.95	50.75	50.75	5.47	48.13	48.13	6.05	45.28	45.28	6.70
	57 (13.9)	57.35	57.35	4.09	55.28	55.28	4.50	53.08	53.08	4.95	50.69	50.69	5.47	48.08	48.08	6.05	45.23	45.23	6.70
2250	72 (22.2)	69.17	38.34	4.25	66.07	37.25	4.66	62.79	36.10	5.11	59.30	34.90	5.63	55.56	33.63	6.21	51.60	32.27	6.86
	67 (19.4)	63.16	48.62	4.22	60.34	47.50	4.62	57.37	46.34	5.08	54.21	45.10	5.59	50.84	43.76	6.17	47.24	42.29	6.82
	63 (17.2)††	58.76	46.58	4.20	56.13	45.46	4.60	53.37	44.29	5.05	50.44	43.04	5.56	47.27	41.67	6.14	43.92	40.19	6.79
	62 (16.7)	59.46	56.55	4.21	56.93	56.93	4.61	54.61	54.61	5.06	52.08	52.08	5.58	49.33	49.33	6.16	46.33	46.33	6.81
	57 (13.9)	59.06	59.06	4.20	56.87	56.87	4.60	54.55	54.55	5.06	52.02	52.02	5.58	49.28	49.28	6.16	46.29	46.29	6.81

Manufacturer reserves the right to change, at any time, specifications and designs without notice and without obligations.

CONDENSER ONLY RATINGS (Copper Coil Models)

SST °F (°C)		CONDENSER ENTERING AIR TEMPERATURES °F (°C)							
		55 (12.78)	65 (18.33)	75 (23.89)	85 (29.44)	95 (35.0)	105 (40.56)	115 (46.11)	125 (51.67)
BA14NA01800G-A									
30 (-1.11)	TCG	16.00	14.90	13.90	12.90	12.00	10.90	9.80	8.60
	SDT	73.60	83.20	92.80	102.60	112.40	122.40	132.30	142.40
	KW	0.77	0.88	0.99	1.12	1.27	1.44	1.65	1.88
35 (1.67)	TCG	17.60	16.50	15.40	14.40	13.40	12.20	11.00	9.80
	SDT	75.00	84.60	94.30	104.00	113.80	123.50	133.50	143.50
	KW	0.77	0.88	1.00	1.13	1.28	1.46	1.66	1.90
40 (4.44)	TCG	19.40	18.20	17.10	16.00	14.90	13.70	12.40	11.00
	SDT	76.50	86.10	95.80	105.40	115.00	124.80	134.60	144.60
	KW	0.77	0.88	1.00	1.14	1.29	1.47	1.67	1.91
45 (7.22)	TCG	21.20	20.00	18.90	17.70	16.50	15.20	13.80	12.30
	SDT	78.00	87.50	97.10	106.70	116.40	126.10	135.90	145.70
	KW	0.77	0.88	1.01	1.14	1.30	1.48	1.69	1.93
50 (10.0)	TCG	23.20	22.00	20.80	19.50	18.30	16.90	15.40	13.80
	SDT	79.30	88.90	98.50	108.10	117.70	127.40	137.10	146.90
	KW	0.76	0.88	1.01	1.15	1.30	1.49	1.70	1.94
55 (12.78)	TCG	25.30	24.00	22.80	21.50	20.10	18.70	17.10	15.40
	SDT	80.80	90.40	100.00	109.50	119.10	128.80	138.40	148.00
	KW	0.75	0.87	1.00	1.15	1.31	1.50	1.71	1.95
BA14NA02400G-A									
30 (-1.11)	TCG	21.30	20.10	18.90	17.70	16.60	15.40	14.20	13.00
	SDT	69.90	79.40	88.80	98.30	107.80	117.30	126.70	136.10
	KW	1.05	1.21	1.37	1.54	1.74	1.96	2.22	2.52
35 (1.67)	TCG	23.40	22.10	20.80	19.60	18.30	17.10	15.80	14.40
	SDT	71.10	80.60	90.00	99.50	108.90	118.20	127.50	136.90
	KW	1.06	1.21	1.37	1.54	1.74	1.96	2.22	2.52
40 (4.44)	TCG	25.60	24.20	22.90	21.50	20.20	18.80	17.40	15.90
	SDT	72.40	81.80	91.20	100.60	109.80	119.10	128.40	137.70
	KW	1.06	1.21	1.37	1.55	1.74	1.97	2.22	2.53
45 (7.22)	TCG	28.00	26.50	25.10	23.60	22.10	20.60	19.00	17.40
	SDT	73.80	83.20	92.40	101.70	110.90	120.20	129.40	138.60
	KW	1.07	1.22	1.37	1.55	1.74	1.97	2.23	2.53
50 (10.0)	TCG	30.50	28.90	27.30	25.80	24.10	22.50	20.80	19.00
	SDT	75.20	84.40	93.70	102.90	112.10	121.20	130.40	139.60
	KW	1.07	1.22	1.37	1.55	1.74	1.97	2.23	2.53
55 (12.78)	TCG	33.20	31.50	29.80	28.00	26.20	24.40	22.60	20.70
	SDT	76.70	85.80	95.00	104.20	113.30	122.40	131.50	140.60
	KW	1.07	1.22	1.38	1.55	1.75	1.97	2.23	2.53
BA14NA03000G-A									
30 (-1.11)	TCG	24.90	23.60	22.30	21.00	19.60	18.30	16.80	15.20
	SDT	68.80	78.20	87.70	97.20	106.60	116.00	125.40	134.80
	KW	1.22	1.39	1.56	1.74	1.95	2.19	2.47	2.80
35 (1.67)	TCG	27.40	26.00	24.60	23.20	21.70	20.20	18.60	16.90
	SDT	70.00	79.40	88.80	98.10	107.50	116.90	126.20	135.50
	KW	1.23	1.39	1.56	1.75	1.96	2.20	2.48	2.81
40 (4.44)	TCG	30.10	28.60	27.00	25.50	23.90	22.20	20.50	18.70
	SDT	71.30	80.60	89.90	99.20	108.50	117.80	127.10	136.40
	KW	1.24	1.40	1.57	1.76	1.97	2.21	2.49	2.82
45 (7.22)	TCG	33.10	31.40	29.70	28.00	26.30	24.50	22.60	20.60
	SDT	72.70	81.90	91.10	100.40	109.60	118.90	128.10	137.30
	KW	1.24	1.40	1.57	1.76	1.97	2.22	2.50	2.83
50 (10.0)	TCG	36.20	34.40	32.50	30.70	28.80	26.80	24.80	22.60
	SDT	74.20	83.20	92.40	101.60	110.80	120.00	129.10	138.20
	KW	1.25	1.41	1.58	1.77	1.98	2.22	2.51	2.84
55 (12.78)	TCG	39.60	37.60	35.60	33.50	31.50	29.30	27.10	24.80
	SDT	75.70	84.70	93.80	102.90	112.00	121.10	130.20	139.20
	KW	1.25	1.41	1.58	1.77	1.98	2.23	2.52	2.85

Manufacturer reserves the right to change, at any time, specifications and designs without notice and without obligations.

CONDENSER ONLY RATINGS (Copper Coil Models) (Continued)

SST °F (°C)		CONDENSER ENTERING AIR TEMPERATURES °F (°C)							
		55 (12.78)	65 (18.33)	75 (23.89)	85 (29.44)	95 (35.0)	105 (40.56)	115 (46.11)	125 (51.67)
BA14NA03600G-A									
30 (-1.11)	TCG	27.40	29.30	29.20	27.80	25.80	23.60	21.30	19.20
	SDT	66.90	77.90	88.10	97.70	107.00	116.20	125.40	134.80
	KW	0.98	1.26	1.47	1.64	1.81	2.01	2.25	2.57
35 (1.67)	TCG	31.30	32.80	32.40	30.80	28.70	26.30	23.90	21.60
	SDT	68.30	79.20	89.30	98.70	107.90	117.10	126.20	135.50
	KW	0.97	1.25	1.45	1.63	1.81	2.01	2.25	2.56
40 (4.44)	TCG	35.20	36.40	35.70	33.90	31.60	29.00	26.40	24.00
	SDT	69.80	80.60	90.30	99.70	108.90	118.00	127.10	136.40
	KW	0.96	1.24	1.44	1.62	1.80	2.00	2.25	2.56
45 (7.22)	TCG	39.20	40.00	39.00	37.00	34.40	31.70	28.90	26.40
	SDT	71.30	81.60	91.30	100.70	109.80	118.80	127.90	137.20
	KW	0.95	1.22	1.43	1.61	1.80	2.00	2.25	2.57
50 (10.0)	TCG	43.10	43.50	42.20	40.00	37.20	34.30	31.40	28.70
	SDT	72.50	82.80	92.40	101.60	110.70	119.70	128.80	137.90
	KW	0.94	1.21	1.42	1.61	1.80	2.01	2.26	2.58
55 (12.78)	TCG	46.80	46.80	45.30	42.80	39.90	36.80	33.70	30.80
	SDT	73.70	83.80	93.40	102.60	111.60	120.60	129.60	138.70
	KW	0.93	1.20	1.42	1.61	1.81	2.02	2.27	2.59
BA14NA04200G-A									
30 (-1.11)	TCG	33.60	32.00	30.40	28.70	26.90	25.00	23.10	21.00
	SDT	67.80	77.30	86.90	96.50	106.00	115.50	125.00	134.40
	KW	1.73	1.92	2.14	2.39	2.66	2.97	3.31	3.70
35 (1.67)	TCG	37.10	35.30	33.50	31.60	29.70	27.60	25.50	23.30
	SDT	69.00	78.50	88.00	97.50	107.00	116.40	125.70	135.10
	KW	1.73	1.93	2.15	2.40	2.67	2.98	3.33	3.71
40 (4.44)	TCG	40.80	38.90	36.90	34.80	32.70	30.50	28.10	25.70
	SDT	70.20	79.70	89.10	98.60	108.00	117.30	126.50	135.80
	KW	1.74	1.94	2.16	2.41	2.68	2.99	3.34	3.73
45 (7.22)	TCG	44.90	42.70	40.50	38.20	35.90	33.50	31.00	28.30
	SDT	71.60	80.90	90.30	99.60	108.90	118.20	127.40	136.60
	KW	1.74	1.94	2.17	2.41	2.69	3.00	3.35	3.74
50 (10.0)	TCG	49.30	46.90	44.40	42.00	39.40	36.70	34.00	31.10
	SDT	73.00	82.30	91.50	100.70	110.00	119.20	128.30	137.50
	KW	1.75	1.95	2.17	2.42	2.70	3.01	3.36	3.76
55 (12.78)	TCG	54.00	51.40	48.70	45.90	43.10	40.20	37.20	34.10
	SDT	74.50	83.60	92.80	101.90	111.10	120.20	129.30	138.40
	KW	1.75	1.95	2.17	2.42	2.71	3.02	3.38	3.77
BA14NA04800G-A									
30 (-1.11)	TCG	40.80	38.00	35.60	33.50	31.40	29.10	26.60	23.70
	SDT	69.00	78.10	87.30	96.60	106.00	115.30	124.50	133.70
	KW	2.01	2.38	2.69	2.97	3.28	3.65	4.13	4.75
35 (1.67)	TCG	44.70	41.80	39.30	37.10	34.80	32.30	29.50	26.40
	SDT	70.30	79.30	88.50	97.70	107.00	116.30	125.40	134.60
	KW	1.99	2.37	2.69	2.99	3.30	3.67	4.14	4.75
40 (4.44)	TCG	48.90	45.90	43.30	40.90	38.40	35.70	32.60	29.20
	SDT	71.70	80.60	89.80	99.00	108.20	117.30	126.50	135.50
	KW	1.97	2.36	2.69	3.00	3.32	3.69	4.16	4.76
45 (7.22)	TCG	53.30	50.30	47.60	45.00	42.20	39.30	35.90	32.20
	SDT	73.10	82.10	91.10	100.30	109.40	118.50	127.50	136.40
	KW	1.94	2.35	2.69	3.01	3.34	3.71	4.18	4.76
50 (10.0)	TCG	58.10	55.00	52.10	49.30	46.30	43.10	39.40	35.30
	SDT	74.70	83.60	92.60	101.70	110.70	119.70	128.60	137.40
	KW	1.90	2.32	2.68	3.01	3.35	3.73	4.19	4.77
55 (12.78)	TCG	63.30	60.00	57.00	53.90	50.60	47.00	43.00	38.60
	SDT	76.40	85.20	94.20	103.20	112.20	121.00	129.80	138.40
	KW	1.86	2.30	2.67	3.01	3.36	3.74	4.20	4.77

Manufacturer reserves the right to change, at any time, specifications and designs without notice and without obligations.

CONDENSER ONLY RATINGS (Copper Coil Models) (Continued)

SST °F (°C)		CONDENSER ENTERING AIR TEMPERATURES °F (°C)							
		55 (12.78)	65 (18.33)	75 (23.89)	85 (29.44)	95 (35.0)	105 (40.56)	115 (46.11)	125 (51.67)
BA14NA06000G-A									
30 (-1.11)	TCG	53.80	50.20	47.00	44.00	41.20	38.30	35.20	31.80
	SDT	71.80	80.60	89.70	98.90	108.10	117.40	126.50	135.60
	KW	3.08	3.18	3.40	3.73	4.14	4.62	5.14	5.69
35 (1.67)	TCG	59.10	55.20	51.70	48.60	45.50	42.30	38.80	35.10
	SDT	73.20	82.00	91.00	100.10	109.30	118.50	127.60	136.60
	KW	3.06	3.17	3.40	3.73	4.15	4.63	5.16	5.71
40 (4.44)	TCG	64.70	60.60	56.90	53.50	50.00	46.50	42.80	38.70
	SDT	74.70	83.40	92.40	101.40	110.60	119.70	128.70	137.60
	KW	3.03	3.16	3.39	3.73	4.16	4.65	5.18	5.74
45 (7.22)	TCG	70.70	66.40	62.40	58.70	54.90	51.10	46.90	42.50
	SDT	76.30	85.00	93.90	102.90	112.00	121.00	129.90	138.70
	KW	3.01	3.14	3.39	3.74	4.17	4.67	5.21	5.77
50 (10.0)	TCG	77.20	72.60	68.40	64.30	60.20	55.90	51.40	46.60
	SDT	78.20	86.80	95.60	104.50	113.50	122.40	131.20	139.80
	KW	2.97	3.12	3.38	3.75	4.20	4.70	5.25	5.81
55 (12.78)	TCG	84.20	79.30	74.70	70.30	65.80	61.10	56.10	50.80
	SDT	80.20	88.80	97.50	106.30	115.10	123.90	132.50	141.00
	KW	2.93	3.10	3.39	3.76	4.22	4.74	5.29	5.86

KW - Outdoor Unit Kilowatts Only.
SDT -Saturated Temperature Leaving Compressor (°F)
SST -Saturated Temperature Entering Compressor (°F/°C)
TCG -Gross Cooling Capacity (1000 Btuh)

CONDENSER ONLY RATINGS (Aluminum Coil Models)

SST deg °F (°C)		CONDENSER ENTERING AIR TEMPERATURES °F (°C)							
		55 (12.8)	65 (18.3)	75 (23.9)	85 (29.4)	95 (35)	105 (40.6)	115 (46.1)	125 (51.7)
BA14NA01800L-A									
30 (-1.1)	TCG	15.10	14.10	13.10	12.20	11.30	10.40	9.50	8.40
	SDT	70.40	79.80	89.20	98.70	108.30	117.80	127.30	136.80
	KW	0.80	0.91	1.02	1.15	1.30	1.46	1.65	1.87
35 (1.7)	TCG	16.60	15.60	14.60	13.60	12.70	11.70	10.60	9.50
	SDT	71.50	80.80	90.30	99.70	109.20	118.70	128.20	137.70
	KW	0.80	0.91	1.02	1.15	1.30	1.47	1.66	1.88
40 (4.4)	TCG	18.30	17.20	16.10	15.10	14.10	13.00	11.90	10.70
	SDT	72.50	81.90	91.30	100.80	110.20	119.60	129.10	138.50
	KW	0.79	0.90	1.02	1.15	1.30	1.47	1.66	1.89
45 (7.2)	TCG	20.00	18.80	17.80	16.70	15.60	14.50	13.30	12.00
	SDT	73.70	83.00	92.40	101.90	111.20	120.70	130.10	139.40
	KW	0.78	0.89	1.02	1.15	1.30	1.47	1.67	1.89
50 (10)	TCG	21.80	20.70	19.50	18.40	17.30	16.10	14.80	13.40
	SDT	74.90	84.20	93.50	103.00	112.40	121.70	131.10	140.30
	KW	0.77	0.89	1.01	1.15	1.30	1.48	1.67	1.90
55 (12.8)	TCG	23.80	22.60	21.40	20.20	19.00	17.70	16.40	14.90
	SDT	76.10	85.40	94.80	104.20	113.60	122.90	132.10	141.20
	KW	0.76	0.88	1.00	1.15	1.30	1.48	1.68	1.90
BA14NA02400L-A									
30 (-1.1)	TCG	20.20	19.20	18.00	16.90	15.70	14.40	13.10	11.70
	SDT	70.80	80.30	89.70	99.10	108.60	117.90	127.20	136.50
	KW	1.10	1.23	1.37	1.55	1.75	1.98	2.25	2.55
35 (1.7)	TCG	22.40	21.20	20.00	18.70	17.40	16.10	14.60	13.20
	SDT	72.00	81.40	90.80	100.20	109.50	118.80	128.10	137.30
	KW	1.09	1.22	1.37	1.55	1.75	1.98	2.25	2.55
40 (4.4)	TCG	24.70	23.40	22.00	20.70	19.20	17.80	16.30	14.70
	SDT	73.20	82.50	91.90	101.20	110.50	119.70	128.90	138.10
	KW	1.09	1.22	1.37	1.54	1.75	1.98	2.25	2.56
45 (7.2)	TCG	27.10	25.60	24.20	22.70	21.20	19.60	17.90	16.30
	SDT	74.40	83.80	93.00	102.30	111.50	120.70	129.90	138.90
	KW	1.08	1.21	1.36	1.54	1.75	1.98	2.25	2.56
50 (10)	TCG	29.60	28.00	26.40	24.80	23.20	21.50	19.70	17.90
	SDT	75.70	85.00	94.30	103.50	112.60	121.70	130.80	139.90
	KW	1.06	1.20	1.36	1.54	1.74	1.98	2.26	2.56
55 (12.8)	TCG	32.30	30.60	28.80	27.00	25.20	23.40	21.50	19.60
	SDT	77.10	86.40	95.50	104.70	113.70	122.80	131.90	140.80
	KW	1.04	1.19	1.35	1.53	1.74	1.98	2.26	2.57
BA14NA03000L-A									
30 (-1.1)	TCG	29.20	27.60	26.10	24.50	22.80	21.00	18.90	16.60
	SDT	77.50	87.40	97.40	107.60	118.00	128.50	139.30	150.30
	KW	1.23	1.39	1.57	1.79	2.05	2.36	2.73	3.17
35 (1.7)	TCG	32.20	30.50	28.80	27.10	25.30	23.30	21.10	18.70
	SDT	79.10	89.00	99.00	109.10	119.50	130.00	140.70	151.60
	KW	1.24	1.40	1.58	1.80	2.07	2.38	2.76	3.21
40 (4.4)	TCG	35.40	33.60	31.80	29.90	28.00	25.80	23.40	20.80
	SDT	80.80	90.60	100.60	110.80	121.00	131.50	142.10	152.70
	KW	1.25	1.41	1.59	1.82	2.08	2.41	2.79	3.23
45 (7.2)	TCG	39.00	37.00	35.00	33.00	30.80	28.50	26.00	23.20
	SDT	82.60	92.40	102.40	112.40	122.70	133.00	143.40	153.80
	KW	1.26	1.41	1.60	1.83	2.10	2.43	2.81	3.25
50 (10)	TCG	42.70	40.60	38.50	36.30	33.90	31.40	28.70	23.20
	SDT	84.60	94.30	104.20	114.20	124.30	134.50	144.70	153.80
	KW	1.26	1.42	1.61	1.84	2.12	2.44	2.83	3.25
55 (12.8)	TCG	46.80	44.50	42.20	39.80	37.30	34.50	31.60	23.20
	SDT	86.60	96.30	106.10	116.00	125.90	135.90	145.90	153.80
	KW	1.27	1.43	1.62	1.85	2.13	2.46	2.84	3.25

Manufacturer reserves the right to change, at any time, specifications and designs without notice and without obligations.

CONDENSER ONLY RATINGS (Aluminum Coil Models) (Continued)

SST deg °F (°C)		CONDENSER ENTERING AIR TEMPERATURES °F (°C)							
		55 (12.8)	65 (18.3)	75 (23.9)	85 (29.4)	95 (35)	105 (40.6)	115 (46.1)	125 (51.7)
BA14NA03600L-A									
30 (-1.1)	TCG	30.20	29.00	27.60	25.80	24.00	22.00	20.10	18.10
	SDT	71.60	81.10	90.50	99.80	109.00	118.20	127.40	136.60
	KW	1.49	1.77	2.00	2.22	2.44	2.70	3.03	3.45
35 (1.7)	TCG	33.40	32.10	30.40	28.60	26.60	24.50	22.30	20.20
	SDT	72.90	82.30	91.70	100.90	110.00	119.10	128.30	137.50
	KW	1.48	1.76	1.99	2.21	2.44	2.70	3.03	3.46
40 (4.4)	TCG	36.80	35.30	33.50	31.40	29.30	27.00	24.70	22.40
	SDT	74.20	83.60	92.90	102.00	111.10	120.20	129.30	138.40
	KW	1.47	1.75	1.98	2.20	2.44	2.71	3.04	3.47
45 (7.2)	TCG	40.40	38.70	36.70	34.40	32.10	29.60	27.10	24.70
	SDT	75.60	84.90	94.20	103.20	112.30	121.30	130.30	139.30
	KW	1.47	1.74	1.98	2.21	2.44	2.72	3.06	3.48
50 (10)	TCG	44.20	42.20	40.00	37.50	34.90	32.30	29.70	27.00
	SDT	77.10	86.40	95.50	104.50	113.50	122.40	131.30	140.20
	KW	1.47	1.74	1.98	2.21	2.45	2.73	3.07	3.50
55 (12.8)	TCG	48.10	45.90	43.40	40.70	37.90	35.10	32.20	29.40
	SDT	78.80	88.00	97.00	105.90	114.80	123.50	132.30	141.10
	KW	1.48	1.75	2.00	2.23	2.47	2.76	3.10	3.52
BA14NA04200L-A									
30 (-1.1)	TCG	36.40	34.70	32.90	31.00	29.00	27.00	24.80	22.50
	SDT	74.90	84.50	94.20	103.90	113.60	123.50	133.40	143.40
	KW	1.84	2.05	2.29	2.57	2.87	3.23	3.63	4.09
35 (1.7)	TCG	40.10	38.20	36.20	34.20	32.00	29.80	27.50	25.00
	SDT	76.40	85.90	95.50	105.10	114.80	124.60	134.50	144.50
	KW	1.85	2.07	2.31	2.59	2.90	3.26	3.67	4.14
40 (4.4)	TCG	44.20	42.10	39.90	37.60	35.30	32.90	30.30	27.70
	SDT	77.90	87.40	96.90	106.50	116.10	125.90	135.70	145.50
	KW	1.87	2.08	2.33	2.61	2.92	3.29	3.70	4.17
45 (7.2)	TCG	48.60	46.20	43.80	41.40	38.80	36.20	33.40	30.60
	SDT	79.60	89.00	98.40	107.90	117.50	127.20	136.90	146.60
	KW	1.88	2.10	2.35	2.63	2.95	3.32	3.74	4.21
50 (10)	TCG	53.30	50.80	48.10	45.40	42.60	39.80	36.80	33.70
	SDT	81.30	90.60	100.00	109.40	119.00	128.50	138.20	147.70
	KW	1.89	2.12	2.37	2.65	2.98	3.35	3.77	4.24
55 (12.8)	TCG	58.50	55.60	52.70	49.80	46.80	43.70	40.40	37.10
	SDT	83.10	92.40	101.70	111.10	120.50	130.00	139.40	148.70
	KW	1.91	2.13	2.39	2.68	3.01	3.38	3.80	4.27
BA14NA04800L-A									
30 (-1.1)	TCG	40.40	38.10	35.90	33.60	31.20	28.80	26.20	23.40
	SDT	69.70	78.90	88.10	97.30	106.50	115.80	124.90	134.10
	KW	2.05	2.37	2.65	2.93	3.24	3.62	4.09	4.70
35 (1.7)	TCG	44.50	42.10	39.60	37.20	34.70	32.00	29.20	26.30
	SDT	71.10	80.20	89.30	98.50	107.70	116.80	126.00	135.10
	KW	2.03	2.36	2.66	2.95	3.27	3.64	4.11	4.70
40 (4.4)	TCG	48.90	46.20	43.60	41.00	38.20	35.40	32.40	29.30
	SDT	72.60	81.60	90.70	99.80	108.90	118.00	127.00	136.10
	KW	2.00	2.35	2.67	2.97	3.29	3.67	4.12	4.70
45 (7.2)	TCG	53.40	50.50	47.70	44.90	42.00	38.90	35.70	32.30
	SDT	74.10	83.00	92.10	101.10	110.10	119.10	128.10	137.00
	KW	1.97	2.34	2.67	2.99	3.31	3.69	4.15	4.71
50 (10)	TCG	58.10	55.00	52.00	49.00	45.80	42.60	39.10	35.50
	SDT	75.70	84.60	93.50	102.50	111.40	120.30	129.20	138.00
	KW	1.94	2.33	2.68	3.00	3.34	3.72	4.17	4.72
55 (12.8)	TCG	62.90	59.60	56.40	53.10	49.80	46.30	42.60	38.70
	SDT	77.40	86.20	95.00	103.90	112.70	121.50	130.30	139.00
	KW	1.91	2.32	2.68	3.02	3.37	3.75	4.20	4.73

Manufacturer reserves the right to change, at any time, specifications and designs without notice and without obligations.

CONDENSER ONLY RATINGS (Aluminum Coil Models) (Continued)

SST deg °F (°C)		CONDENSER ENTERING AIR TEMPERATURES °F (°C)							
		55 (12.8)	65 (18.3)	75 (23.9)	85 (29.4)	95 (35)	105 (40.6)	115 (46.1)	125 (51.7)
BA14NA06000L-A									
30 (-1.1)	TCG	55.00	52.30	49.50	46.70	43.70	40.60	37.30	33.70
	SDT	71.00	80.30	89.60	99.00	108.20	117.50	126.70	135.70
	KW	2.63	2.95	3.30	3.69	4.13	4.63	5.19	5.82
35 (1.7)	TCG	60.60	57.60	54.60	51.50	48.30	44.90	41.30	37.50
	SDT	72.40	81.70	90.90	100.20	109.40	118.60	127.70	136.70
	KW	2.66	2.98	3.33	3.72	4.16	4.66	5.23	5.87
40 (4.4)	TCG	66.60	63.30	60.00	56.60	53.10	49.40	45.50	41.40
	SDT	74.00	83.20	92.40	101.50	110.70	119.80	128.80	137.80
	KW	2.69	3.00	3.35	3.75	4.19	4.70	5.27	5.91
45 (7.2)	TCG	73.00	69.40	65.80	62.00	58.20	54.20	50.00	45.50
	SDT	75.70	84.80	93.90	103.00	112.00	121.00	130.00	138.90
	KW	2.72	3.03	3.38	3.78	4.23	4.74	5.31	5.96
50 (10)	TCG	79.90	75.90	71.90	67.80	63.60	59.20	54.60	49.80
	SDT	77.50	86.50	95.50	104.50	113.50	122.40	131.20	140.00
	KW	2.75	3.06	3.42	3.82	4.27	4.78	5.36	6.00
55 (12.8)	TCG	87.10	82.70	78.30	73.80	69.20	64.50	59.50	54.30
	SDT	79.50	88.30	97.20	106.10	115.00	123.80	132.50	141.10
	KW	2.78	3.09	3.45	3.85	4.31	4.82	5.40	6.04

KW - Outdoor Unit Kilowatts Only.
SDT -Saturated Temperature Leaving Compressor (°F)
SST -Saturated Temperature Entering Compressor (°F/°C)
TCG -Gross Cooling Capacity (1000 Btuh)

GUIDE SPECIFICATIONS

Air-cooled, split-system air conditioner
BA14NA
1-1/2 to 5 nominal tons

GENERAL

System Description

Outdoor-mounted, air-cooled, split-system air conditioner unit suitable for ground or rooftop installation. Unit consists of a hermetic compressor, an air-cooled coil, propeller-type condenser fan, and a control box. Unit will discharge supply air upward as shown on contract drawings. Unit will be used in a refrigeration circuit to match up to a packaged fan coil or coil unit.

Quality Assurance

- Unit will be rated in accordance with the latest edition of AHRI Standard 210.
- Unit will be certified for capacity and efficiency, and listed in the latest AHRI directory.
- Unit construction will comply with latest edition of ANSI/ ASHRAE and with NEC.
- Unit will be constructed in accordance with UL standards and will carry the UL label of approval. Unit will have c-UL-us approval.
- Unit cabinet will be capable of withstanding Federal Test Method Standard No. 141 (Method 6061) 500-hr salt spray test.
- Air-cooled condenser coils will be leak tested at 150 psig and pressure tested at 450 psig.
- Unit constructed in ISO9001 approved facility.

Delivery, Storage, and Handling

- Unit will be shipped as single package only and is stored and handled per unit manufacturer's recommendations.

Warranty (for inclusion by specifying engineer)

- U.S. and Canada only.

PRODUCTS

Equipment

Factory assembled, single piece, air-cooled air conditioner unit. Contained within the unit enclosure is all factory wiring, piping, controls, compressor, refrigerant charge Puron® (R-410A), and special features required prior to field start-up.

Unit Cabinet

- Unit cabinet will be constructed of galvanized steel, bonderized, and coated with a powder coat paint.

Fans

- Condenser fan will be direct-drive propeller type, discharging air upward.
- Condenser fan motors will be totally enclosed, 1-phase type with class B insulation and permanently lubricated bearings. Shafts will be corrosion resistant.
- Fan blades will be statically and dynamically balanced.
- Condenser fan openings will be equipped with coated steel wire safety guards.

Compressor

- Compressor will be hermetically sealed.
- Compressor will be mounted on rubber vibration isolators.

Condenser Coil

- Condenser coil will be air cooled.
- Coil will be constructed of aluminum fins mechanically bonded to copper or aluminum tubes which are then cleaned, dehydrated, and sealed.

Refrigeration Components

- Refrigeration circuit components will include liquid-line shutoff valve with sweat connections, vapor-line shutoff valve with sweat connections, system charge of Puron® (R-410A) refrigerant, and compressor oil.
- Unit will be equipped with hlow pressure switch and filter drier for Puron® (R-410A) refrigerant.

Operating Characteristics

- The capacity of the unit will meet or exceed _____ Btuh at a suction temperature of _____ °F/°C. The power consumption at full load will not exceed _____ kW.
- Combination of the unit and the evaporator or fan coil unit will have a total net cooling capacity of _____ Btuh or greater at conditions of _____ CFM entering air temperature at the evaporator at _____ °F/°C wet bulb and _____ °F/°C dry bulb, and air entering the unit at _____ °F/°C.
- The system will have a SEER of _____ Btuh/watt or greater at DOE conditions.

Electrical Requirements

- Nominal unit electrical characteristics will be _____ v, single phase, 60 hz. The unit will be capable of satisfactory operation within voltage limits of _____ v to _____ v.
- Nominal unit electrical characteristics will be _____ v, three phase, 60 hz. The unit will be capable of satisfactory operation within voltage limits of _____ v to _____ v.
- Unit electrical power will be single point connection.
- Control circuit will be 24v.

Special Features

- Refer to section of this literature identifying accessories and descriptions for specific features and available enhancements.

© 2021 Carrier. All rights reserved.

Manufacturer reserves the right to change, at any time, specifications and designs without notice and without obligations.