24AAA5
Single–Stage Air Conditioner with Puron® Refrigerant 1–1/2 To 5 Tons

Carrier
turn to the experts™

Product Data

Puron

Comfort SERIES

Carrier's Air Conditioners with Puron® refrigerant provide a collection of features unmatched by any other family of equipment. The 24AAA5 has been designed utilizing Carrier's non–ozone depleting Puron refrigerant.

INDUSTRY LEADING FEATURES / BENEFITS

Efficiency

- 14.0 - 16.5 SEER / 11.7 – 13.5 EER
- Microtube Technology™ refrigeration system

Reliability

- Non–ozone depleting Puron® refrigerant
- Scroll compressor
- Internal pressure relief valve
- Internal thermal overload
- Filter drier

Durability

WeatherArmor™ protection package:

- Solid, durable sheet metal construction
- Dense wire coil guard

Applications

- Long–line – up to 250 feet (76.20 m) total equivalent length, up to 200 feet (60.96 m) condenser above evaporator, or up to 80 ft. (24.38 m) evaporator above condenser (See Longline Guide for more information.)
- Low ambient (down to –10°F/–23°C) with accessory kit

NOTE: Ratings contained in this document are subject to change at any time. Always refer to the AHRI directory (www.ahridirectory.org) for the most up–to–date ratings information.

PRODUCT NUMBER NOMENCLATURE

1	2	3	4	5	6	7	8	9	10	11	12	13
N	N	A	A	A/N	N	N	N	A/N	A/N	A/N	N	N
2	**4**	**A**	**A**	**A**	**5**	**3**	**6**	**A**	**0**	**0**	**3**	0
Product Series		Product Family	Tier	Major Series	SEER	Cooling Capacity		Grille Variations	Open	Open	Voltage	Series
24=AC		A=RES AC	Comfort	A=Puron	5=15 SEER			A = Dense W = Standard	0=Not Defined	0=Not Defined	3=208/230–1	0 = Original Series

Use of the AHRI Certified TM Mark indicates a manufacturer's participation in the program For verification of certification for individual products, go to www.ahridirectory.org.

PHYSICAL DATA

UNIT SIZE	18–30	24–30	30–30	36–30	42–30	48–30	49–30	60–30	61–30
Compressor Type	Scroll								
REFRIGERANT	Puron® (R–410A)								
Control	TXV (Puron Hard Shutoff)								
Charge (lb)	3.83 (1.74)	4.60 (2.09)	5.67 (2.57)	6.40 (2.90)	7.46 (3.38)	8.31 (3.77)	13.00 (5.90)	9.39 (4.26)	14.50 (6.58)
COND FAN	Propeller Type, Direct Drive								
Air Discharge	Vertical								
Air Qty (CFM)	1700	1881	2614	3365	3700	3545	4046	3700	4046
Motor HP	1/12	1/12	1/10	1/5	1/4	1/4	1/4	1/4	1/4
Motor RPM	1100	1100	1100	1100	1100	1110	800	1100	800
COND COIL									
Face Area (Sq ft)	9.85	11.2	17.24	19.4	15.1	15.1	25.15	17.25	30.15
Fins per In.	25	25	25	25	20	20	20	25	20
Rows	1	1	1	1	2	2	2	2	2
Circuits	3	5	4	5	6	6	7	8	8
VALVE CONNECT. (In. ID)									
Vapor	3/4	3/4	3/4	7/8	7/8	7/8	7/8	7/8	7/8
Liquid	3/8								
REFRIGERANT TUBES (In. OD)									
Rated Vapor*	3/4	3/4	3/4	7/8	7/8	7/8	7/8	1–1/8	1–1/8
Max Liquid Line†	3/8								

* Units are rated with 25 ft (7.6 m) of lineset length. See Vapor Line Sizing and Cooling Capacity Loss table when using other sizes and lengths of lineset.
Note: See unit Installation Instruction for proper installation.

† See *Liquid Line Sizing For Cooling Only Systems with Puron Refrigerant* tables.

REFRIGERANT PIPING LENGTH LIMITATIONS

Liquid Line Sizing and Maximum Total Equivalent Lengths† for Cooling Only Systems with Puron® Refrigerant:

The maximum allowable length of a residential split system depends on the liquid line diameter and vertical separation between indoor and outdoor units.

See Table below for liquid line sizing and maximum lengths :

Maximum Total Equivalent Length
Outdoor Unit BELOW Indoor Unit

Size	Liquid Line Connection	Liquid Line Diam. w/ TXV	AC with Puron Refrigerant Maximum Total Equivalent Length†: Outdoor unit BELOW Indoor Vertical Separation ft (m)								
			0–5 (0–1.5)	6–10 (1.8–3.0)	11–20 (3.4–6.1)	21–30 (6.4–9.1)	31–40 (9.4–12.2)	41–50 (12.5–15.2)	51–60 (15.5–18.3)	61–70 (18.6–21.3)	71–80 (21.6–24.4)
18 AC with Puron	3/8	1/4	150	150	125	100	100	75	– –	– –	– –
		5/16	250*	250*	250*	250*	250*	250*	250*	225*	150
		3/8	250*	250*	250*	250*	250*	250*	250*	250*	250*
24 AC with Puron	3/8	1/4	75	75	75	50	50	– –	– –	– –	– –
		5/16	250*	250*	250*	250*	250*	225*	175	125	100
		3/8	250*	250*	250*	250*	250*	250*	250*	250*	250*
30 AC with Puron	3/8	1/4	30	– –	– –	– –	– –	– –	– –	– –	– –
		5/16	175	225*	200	175	125	100	75	– –	– –
		3/8	250*	250*	250*	250*	250*	250*	250*	250*	250*
36 AC with Puron	3/8	5/16	175	150	150	100	100	100	75	– –	– –
		3//8	250*	250*	250*	250*	250*	250*	250*	250*	250*
42 AC with Puron	3/8	5/16	125	100	100	75	75	50	– –	– –	– –
		3/8	250*	250*	250*	250*	250*	250*	250*	250*	150
48, 49 AC with Puron	3/8	3/8	250*	250*	250*	250*	250*	250*	230	160	– –
60, 61 AC with Puron	3/8	3/8	250*	250*	250*	225*	190	150	110	– –	– –

*** Maximum actual length not to exceed 200 ft (61 m)**

† Total equivalent length accounts for losses due to elbows or fitting. See the Long Line Guideline for details.

– – = outside acceptable range

Maximum Total Equivalent Length
Outdoor Unit ABOVE Indoor Unit

Size	Liquid Line Connection	Liquid Line Diam. w/ TXV	AC with Puron Refrigerant Maximum Total Equivalent Length†: Outdoor unit ABOVE Indoor Vertical Separation ft (m)							
			25 (7.6)	26–50 (7.9–15.2)	51–75 (15.5–22.9)	76–100 (23.2–30.5)	101–125 (30.8–38.1)	126–150 (38.4–45.7)	151–175 (46.0–53.3)	176–200 (53.6–61.0)
18 AC with Puron	3/8	1/4	175	250*	250*	250*	250*	250*	250*	250*
		5/16	250*	250*	250*	250*	250*	250*	250*	250*
		3/8	250*	250*	250*	250*	250*	250*	250*	250*
24 AC with Puron	3/8	1/4	100	125	175	200	225*	250*	250*	250*
		5/16	250*	250*	250*	250*	250*	250*	250*	250*
		3/8	250*	250*	250*	250*	250*	250*	250*	250*
30 AC with Puron	3/8	1/4	30	– –	– –	– –	– –	– –	– –	– –
		5/16	250*	250*	250*	250*	250*	250*	250*	250*
		3/8	250*	250*	250*	250*	250*	250*	250*	250*
36 AC with Puron	3/8	5/16	225*	250*	250*	250*	250*	250*	250*	250*
		3/8	250*	250*	250*	250*	250*	250*	250*	250*
42 AC with Puron	3/8	5/16	175	200	250*	250*	250*	250*	250*	250*
		3/8	250*	250*	250*	250*	250*	250*	250*	250*
48, 49 AC with Puron	3/8	3/8	250*	250*	250*	250*	250*	250*	250*	250*
60, 61 AC with Puron	3/8	3/8	250*	250*	250*	250*	250*	250*	250*	250*

*** Maximum actual length not to exceed 200 ft (61 m)**

† Total equivalent length accounts for losses due to elbows or fitting. See the Long Line Guideline for details.

– – = outside acceptable range

REFRIGERANT CHARGE ADJUSTMENTS

Liquid Line Size	Puron Charge oz/ft (g/m)
3/8	0.60 (17.74) (Factory charge for lineset = 9 oz / 266.16 g)
5/16	0.40 (11.83)
1/4	0.27 (7.98)

Units are factory charged for 15 ft (4.6 m) of 3/8" liquid line. The factory charge for 3/8" lineset 9 oz. When using other length or diameter liquid lines, charge adjustments are required per the chart above.

Charging Formula:

[(Lineset oz/ft x total length) – (factory charge for lineset)] = charge adjustment

Example 1: System has 15 ft of line set using existing 1/4" liquid line. What charge adjustment is required?

Formula: (.27 oz/ft x 15ft) – (9 oz) = (-4.95) oz.

Net result is to remove 4.95 oz of refrigerant from the system

Example 2: System has 45 ft of existing 5/16" liquid line. What is the charge adjustment?

Formula: (.40 oz/ft. x 45ft) – (9 oz.) = 9 oz.

Net result is to add 9 oz of refrigerant to the system

NOTE: Conditions must be favorable for charging by subcooling method. Indoor temperature must be 70°F to 80°F (21.1°C to 26.7°C), and outdoor temperature must be 70°F to 100°F (21.1°C to 37.8°C). If outside these conditions, adjust charge for long line sets by weigh-in method.

LONG LINE APPLICATIONS

An application is considered Long Line, when the refrigerant level in the system requires the use of accessories to maintain acceptable refrigerant management for systems reliability. See Accessory Usage Guideline table for required accessories. Defining a system as long line depends on the liquid line diameter, actual length of the tubing, and vertical separation between the indoor and outdoor units.

For Air Conditioner systems, the chart below shows when an application is considered Long Line.

AC with Puron® Refrigerant Long Line Description ft (m) Beyond these lengths, a TXV is required

Total Length	Outdoor Unit Above or Below Indoor Unit
TXV required beyond 50 ft. (15.2 m)	TXV required beyond 20 ft. (6.1 m)

AC with Puron® Refrigerant Long Line Description ft (m) (Beyond these lengths, long line accessories are required)

Liquid Line Size	Units On Same Level	Outdoor Below Indoor	Outdoor Above Indoor
1/4 + TXV	No accessories needed within allowed lengths	No accessories needed within allowed lengths	175 (53.3)
5/16 + TXV	120 (36.6)	50 (15.2) vertical or 120 (36.6) total	120 (36.6)
3/8 + TXV	80 (24.4)	35 (10.7) vertical or 80 (24.4) total	80 (24.4)

Note: See Residential Piping and Long Line Guideline for details

VAPOR LINE SIZING AND COOLING CAPACITY LOSS

Acceptable vapor line diameters provide adequate oil return to the compressor while avoiding excessive capacity loss. The suction line diameters shown in the chart below are acceptable for AC systems with Puron refrigerant:

Vapor Line Sizing and Cooling Capacity Losses — Puron® Refrigerant 1-Stage Air Conditioner Applications

Unit Size	Maximum Liquid Line Diameters (In. OD)	Vapor Line Diameters (In. OD)	Cooling Capacity Loss (%) Total Equivalent Line Length ft. (m) 1-Stage AC with Puron								
			26–50 (7.9–15.2)	51–80 (15.5–24.4)	81–100 (24.7–30.5)	101–125 (30.8–38.1)	126–150 (38.4–45.7)	151–175 (46.0–53.3)	176–200 (53.6–61.0)	201–225 (61.3–68.6)	226–250 (68.9–76.2)
18	3/8	1/2	1	2	3	5	6	7	8	9	11
		5/8	0	1	1	1	2	2	2	3	3
		3/4	0	0	0	0	1	1	1	1	1
24	3/8	5/8	0	1	2	2	3	3	4	5	5
		3/4	0	0	1	1	1	1	1	2	2
		7/8	0	0	0	0	0	1	1	1	1
30	3/8	5/8	1	2	3	3	4	5	6	7	8
		3/4	0	0	1	1	1	2	2	2	3
		7/8	0	0	0	0	1	1	1	1	1
36	3/8	5/8	1	2	4	5	6	8	9	10	12
		3/4	0	1	1	2	2	3	3	4	4
		7/8	0	0	0	1	1	1	1	2	2
42	3/8	3/4	0	1	2	2	3	4	4	5	6
		7/8	0	0	1	1	1	2	2	2	3
		1 1/8	0	0	0	0	0	0	0	0	0
48, 49	3/8	3/4	0	1	2	3	4	5	5	6	7
		7/8	0	0	1	1	2	2	2	3	3
		1 1/8	0	0	0	0	0	0	0	1	1
60, 61	3/8	3/4	1	2	4	5	6	7	9	10	11
		7/8	0	1	2	2	3	4	4	5	5
		1 1/8	0	0	0	1	1	1	1	1	1

Applications in this area may be long line and may have height restrictions. See the *Residential Piping and Long Line Guideline*.

ACCESSORY THERMOSTATS

PART NUMBER	DESCRIPTION
TP−WEM01	Côr™ Thermostat
TP−PRH01−A	edge™ Programmable Relative Humidity Thermostat
TP−PAC01	edge™ Programmable Thermostat
TP−NRH01	edge™ Non−Programmable Relative Humidity Thermostat
TP−NAC01	edge™ Non−Programmable Thermostat
TC−WHS01	Wi−Fi® Thermostat
TC−PAC01	Programmable Thermostat
TC−NAC01	Non−Programmable Thermostat
TCSNAC01	Non−Programmable Standard Screen Thermostat

THERMOSTAT ACCESSORIES		
PART NUMBER	**DESCRIPTION**	**THERMOSTATS USED WITH**
TP−EXP	edge™ EXP® Card	Programmable edge™ thermostats
TSTATCCSEN01−B	Outdoor Air Temperature Sensor	TP−Pxx, TP−Nxx
TSTATXXCNV10	Thermostat Conversion Kit (4 to 5 wire) − 10 pack	All Carrier® branded thermostats
TX−MBP01	Medium Decorative Backplate	TC−Nxx
TX−LBP01	Large Decorative Backplate	TP−Pxx, TP−Nxx, TC−Pxx

ACCESSORIES

Accessory Kit Number	Description	18	24	30	36	42	48	49	60	61
HC32GR237	BALL BEARING FAN MOTOR	X								
HC34GE240	BALL BEARING FAN MOTOR			X						
HC39GQ232	BALL BEARING FAN MOTOR								X	
HC40GE226	BALL BEARING FAN MOTOR		X		X	X	X			
HC40GE228	BALL BEARING FAN MOTOR							X		X
KAACH1201AAA	CRKC HTR KIT				X	X	X	X	X	
KAACH1401AAA	CRKC HTR KIT	X	X	X						
KAACS0201PTC	KIT PTC	X	X	X	X	X	X	X	X	X
KSAFT0101AAA	FREEZE THERM KIT	X	X	X	X	X	X	X	X	X
KAAHI0501PUR	HIGH PRESSURE SW KIT	X	X	X	X	X	X	X	X	X
KAALP0401PUR	LOW PRESSURE SW KIT	X	X	X	X	X	X	X	X	X
KAALS0201LLS	SOL VALVE KIT	X	X	X	X	X	X	X	X	X
KAATD0101TDR	TIME DELAY KIT	X	X	X	X	X	X	X	X	X
KAAWS0101AAA	WINTER ST KIT	X	X	X	X	X	X	X	X	X
KSACY0101AAA	CYCLE PROTR KIT	X	X	X	X	X	X	X	X	X
KSAHS1701AAA	HARD START KIT	X	X	X	X	X	X	X	X	X
KSALA0301410	LOW AMBIENT KIT	X	X	X	X	X	X	X	X	X
KSALA0601AAA	MOTORMASTER KIT	X	X	X	X	X	X	X	X	X
KSASF0201AAA	SUPPORT FEET KIT	X	X	X	X	X	X	X	X	X
KSASH0601COP	SOUND BLANKET KIT	X	X	X	X		X	X		
KSASH2101COP	SOUND BLANKET KIT					X			X	
KSASH2401COP	SOUND BLANKET KIT									X
KSATX0201PUR	TXV KIT	X		X						
KSATX0301PUR	TXV KIT		X							
KSATX0401PUR	TXV KIT				X			X	X	X
KSATX0501PUR	TXV KIT					X	X			
KSBTX0301PUR	TXV KIT		X							
KSBTX0401PUR	TXV KIT				X			X	X	X

X = Accessory

ACCESSORY USAGE GUIDELINE

ACCESSORY	REQUIRED FOR LOW–AMBIENT COOLING APPLICATIONS (Below 55°F/12.8°C)	REQUIRED FOR LONG LINE APPLICATIONS* (Over 80 ft./24.38 m)	REQUIRED FOR SEA COAST APPLICATIONS (Within 2 miles/3.22 km)
Ball Bearing Fan Motor	Yes	No	No
Compressor Start Assist Capacitor and Relay	Yes	Yes	No
Crankcase Heater	Yes	Yes	No
Evaporator Freeze Thermostat	Yes	No	No
Hard Shut–Off TXV	Yes	Yes	Yes
Liquid Line Solenoid Valve	No	No	No
Motor Master® Control or Low–ambient Pressure Switch	Yes†	No	No
Support Feet	Recommended	No	Recommended
Winter Start Control	Yes#	No	No

* For tubing line sets between 80 and 200 ft. (24.38 and 60.96 m) and/or 35 ft. (10.7 m) vertical differential, refer to Residential Split–System Longline Application Guideline.

† Required for Low–Ambient Controller (full modulation feature) MotorMaster® Control.

\# Required if Low Pressure Switch is factory or field installed.

Accessory Description and Usage (Listed Alphabetically)

1. Ball-Bearing Fan Motor

A fan motor with ball bearings which permits speed reduction while maintaining bearing lubrication.

Usage Guideline:

Required on all units when MotorMaster® is used.

2. Compressor Start Assist - Capacitor and Relay

Start capacitor and relay gives a ”hard” boost to compressor motor at each start up.

Usage Guideline:

Required for reciprocating compressors in the following applications:

- Long line
- Low ambient cooling
- Hard shut off expansion valve on indoor coil
- Liquid line solenoid on indoor coil

Required for single-phase scroll compressors in the following applications:

- Long line
- Low ambient cooling

Suggested for all compressors in areas with a history of low voltage problems.

3. Compressor Start Assist — PTC Type

Solid state electrical device which gives a ”soft” boost to the compressor at each start-up.

Usage Guideline:

Suggested in installations with marginal power supply.

4. Crankcase Heater

An electric resistance heater which mounts to the base of the compressor to keep the lubricant warm during off cycles. Improves compressor lubrication on restart and minimizes the chance of liquid slugging.

Usage Guideline:

Required in low ambient cooling applications.

Required in long line applications.

Suggested in all commercial applications.

5. Cycle Protector

The cycle protector is designed to prevent compressor short cycling. This control provides an approximate 5-minute delay after power to the compressor has been interrupted for any reason, including power outage, protector control trip, thermostat jiggling, or normal cycling.

6. Evaporator Freeze Thermostat

An SPST temperature-actuated switch that stops unit operation when evaporator reaches freeze-up conditions.

Usage Guideline:

Required when low ambient kit has been added.

7. Low-Ambient Pressure Switch Kit

A long life pressure switch which is mounted to outdoor unit service valve. It is designed to cycle the outdoor fan motor in order to maintain head pressure within normal operating limits (approximately 100 psig to 225 psig). The control will maintain working head pressure at low-ambient temperatures down to 0°F (-18°C) when properly installed.

Usage Guideline:

A Low-Ambient Pressure Switch or MotorMaster® Low-Ambient Controller must be used when cooling operation is used at outdoor temperatures below 55°F (12.8°C).

8. MotorMaster® Low-Ambient Controller

A fan-speed control device activated by a temperature sensor, designed to control condenser fan motor speed in response to the saturated, condensing temperature during operation in cooling mode only. For outdoor temperatures down to -10°F (-23°C), it maintains condensing temperature at 100°F ±10°F (37.8°C ± 5.5°C).

Usage Guideline:

A MotorMaster® Low Ambient Controller or Low-Ambient Pressure Switch must be used when cooling operation is used at outdoor temperatures below 55°F (12.8°C).

Suggested for all commercial applications.

9. Outdoor Air Temperature Sensor

Designed for use with Carrier Thermostats listed in this publication. This device enables the thermostat to display the outdoor temperature. This device also

is required to enable special thermostat features such as auxiliary heat lock out.

Usage Guideline:

Suggested for all Carrier thermostats listed in this publication.

Accessory Description and Usage (Listed Alphabetically) (Continued)

10. Support Feet

Four stick-on plastic feet that raise the unit 4 in. (101.6 mm) above the mounting pad. This allows sand, dirt, and other debris to be flushed from the unit base, minimizing corrosion.

Usage Guideline:

Suggested in the following applications:

Coastal installations.

Windy areas or where debris is normally circulating.

Rooftop installations.

For improved sound ratings.

11. Thermostatic Expansion Valve (TXV)

A modulating flow-control valve which meters refrigerant liquid flow rate into the evaporator in response to the superheat of the refrigerant gas leaving the evaporator.

Kit includes valve, adapter tubes, and external equalizer tube. Hard shut off types are available.

NOTE: When using a hard shut off TXV with single phase reciprocating compressors, a Compressor Start Assist Capacitor and Relay is required.

Usage Guideline:

Required to achieve AHRI ratings in certain equipment combinations. Refer to combination ratings.

Hard shut off TXV or LLS required in air conditioner long line applications.

Required for use on all zoning systems.

12. Time-Delay Relay

An SPST delay relay which briefly continues operation of indoor blower motor to provide additional cooling after the compressor cycles off.

NOTE: Most indoor unit controls include this feature. For those that do not, use the guideline below.

Usage Guideline:

For improved efficiency ratings for certain combinations of indoor and outdoor units. Refer to AHRI Unitary Directory.

13. Winter Start Control

This control is designed to alleviate nuisance opening of the low-pressure switch by bypassing it for the first 3 minutes of operation.

ELECTRICAL DATA

UNIT SIZE – SERIES	V/PH	OPER VOLTS*		COMPR		FAN	MCA	MAX FUSE† or CKT BRK AMPS
		MAX	MIN	LRA	RLA	FLA		
18–30	208/230/1–60	253	197	47.5	9.0	0.40	11.7	20
24–30				62.9	10.9	0.50	14.1	20
30–30				67.8	12.8	0.75	16.8	25
36–30				79.0	13.6	1.10	18.1	30
42–30				109.0	16.7	1.40	22.3	35
48–30				105.5	15.5	1.40	20.8	35
49–30				109.0	19.9	1.20	26.1	40
60–30				127.1	20.8	1.52	27.5	40
61–30				135.0	21.4	1.20	28.0	40

* Permissible limits of the voltage range at which the unit will operate satisfactorily
† Time–Delay fuse.
FLA – Full Load Amps
LRA – Locked Rotor Amps
MCA – Minimum Circuit Amps
RLA – Rated Load Amps
NOTE: Control circuit is 24V on all units and requires external power source. Copper wire must be used from service disconnect to unit. All motors/compressors contain internal overload protection.
Complies with 2010 requirements of ASHRAE Standards 90.1

A–WEIGHTED SOUND POWER (dBA)

UNIT SIZE – SERIES	Standard Rating (dBA)	TYPICAL OCTAVE BAND SPECTRUM (dBA without tone adjustment)						
		125	250	500	1000	2000	4000	8000
18–30	75	46.0	55.0	59.5	64.0	60.5	54.5	48.5
24–30	71	50.5	53.5	58.5	60.5	60.0	56.5	52.5
30–30	73	49.5	56.0	62.5	64.0	60.5	57.5	53.5
36–30	75	49.0	57.0	62.5	66.0	61.0	58.5	52.0
42–30	75	52.5	63.0	64.0	63.0	62.0	58.0	52.0
48–30	76	53.0	61.0	64.0	65.5	62.0	59.5	50.5
49–30	73	55.0	61.0	64.0	63.0	60.0	57.0	48.0
60–30	75	53.5	57.0	62.5	63.5	61.5	57.5	51.0
61–30	73	54.0	59.0	63.0	63.0	60.0	56.0	48.0

NOTE: Tested in compliance with AHRI 270–1995 (not listed with AHRI)

A–WEIGHTED SOUND POWER (dBA) WITH SOUND SHIELD

UNIT SIZE – SERIES	Standard Rating (dBA)	TYPICAL OCTAVE BAND SPECTRUM (dBA without tone adjustment)						
		125	250	500	1000	2000	4000	8000
18–30	75	46.5	55.5	59.5	63.5	60.0	54.0	47.0
24–30	71	47.5	53.5	58.0	59.5	60.0	55.5	49.0
30–30	72	49.0	56.5	61.5	62.5	60.0	57.0	52.0
36–30	73	49.5	57.0	62.0	64.0	60.0	58.0	51.0
42–30	74	53.5	64.0	64.0	62.5	61.0	56.5	50.5
48–30	73	54.5	61.0	63.5	62.5	60.0	56.5	47.5
49–30	73	55.0	61.0	64.0	63.0	60.0	57.0	48.0
60–30	73	53.5	59.0	63.0	62.5	59.5	56.0	48.0
61–30	73	54.0	59.0	63.0	63.0	60.0	56.0	48.0

NOTE: Tested in compliance with AHRI 270–1995 (not listed with AHRI)

METERING DEVICE

UNIT SIZE – SERIES	INDOOOR	REQUIRED SUBCOOLING °F (°C)
18–30	TXV*	13 (7.22)
24–30		10 (5.56)
30–30		12 (6.67)
36–30		11 (6.11)
42–30		11 (6.11)
48–30		11 (6.11)
49–30		8 (4.44)
60–30		13 (7.22)
61–30		9 (5.00)

* TXV must be ordered separately when indoor coil is not equipped with a TXV. TXV must be hard–shutoff type.

DIMENSIONS

UNIT	SERIES	ELECTRICAL CHARACTERISTICS				A		B		C		D		E		F		G		H		I		J		K		OPERATING WEIGHT		SHIPPING WEIGHT		SHIPPING LENGTH / WIDTH (Sq.)		SHIPPING HEIGHT	
						INCH	MM	INCH	MM	INCH	MM	INCH	MM	INCH	MM	INCH	MM	INCH	MM	INCH	MM	INCH	MM	INCH	MM	INCH	MM	Lbs	Kgs	Lbs	Kgs	INCH	MM	INCH	MM
24AAA518A0030011	0	Y	N	N	N	25 3/4	654.0	25 5/16	642.4	3/4	19.1	4 7/16	113.0	21 1/4	539.9	9 1/8	231.3	5/16	7.9	3	76.2	13	330.2	15 1/4	387.4	9 3/4	247.7	122	55.3	145	65.8	27 7/8	708.2	29 3/4	755.8
24AAA524A0030011	0	Y	N	N	N	25 3/4	654.0	32 1/16	815.1	3/4	19.1	4 7/16	113.0	21 1/4	539.9	9 1/8	231.3	5/16	7.9	3	76.2	13 3/8	339.7	13 1/4	336.6	15 1/16	382.6	123	55.8	148	67.1	27 7/8	708.2	36 5/8	929.5
24AAA530A0030011	0	Y	N	N	N	31 3/16	792.5	32 1/16	815.1	3/4	19.1	6 9/16	166.1	24 11/16	626.3	9 1/8	231.3	5/16	7.9	3	76.2	16 1/8	409.6	15 1/16	382.6	12 5/8	320.7	151	68.5	186	84.4	33 5/16	846.6	36 5/8	929.5
24AAA536A0030011	0	Y	N	N	N	31 3/16	792.5	35 1/2	901.4	7/8	22.2	6 9/16	166.1	24 11/16	626.3	9 1/8	231.3	5/16	7.9	3	76.2	16 1/8	409.6	16 3/8	415.9	14 7/16	366.7	151	68.5	171	77.6	33 5/16	846.6	40	1015.8
24AAA542A0030011	0	Y	N	N	N	31 3/16	792.5	28 11/16	728.7	7/8	22.2	6 9/16	166.1	24 11/16	626.3	9 1/8	231.3	5/16	7.9	3	76.2	15 7/8	403.2	17	431.8	11 7/8	301.6	191	86.6	226	102.5	33 5/16	846.6	33 3/16	843.1
24AAA548A0030011	0	Y	N	N	N	31 3/16	792.5	28 11/16	728.7	7/8	22.2	6 9/16	166.1	24 11/16	626.3	9 1/8	231.3	5/16	7.9	3	76.2	16 3/16	411.2	16 1/4	412.8	10 1/4	260.4	182	82.6	200	90.7	33 5/16	846.6	33 3/16	843.1
24AAA549A0030061	0	Y	N	N	N	35	889.0	38 7/8	987.8	7/8	22.2	6 9/16	166.1	28 7/16	722.8	9 1/8	231.3	5/16	7.9	3	76.2	16 1/2	419.1	16 1/2	419.1	15	381.0	264	119.7	317	143.8	37 1/8	943.1	43 3/8	1102.2
24AAA560A0030011	0	Y	N	N	N	31 3/16	792.5	32 1/16	815.1	7/8	22.2	6 9/16	166.1	24 11/16	626.3	9 1/8	231.3	5/16	7.9	3	76.2	15 1/2	393.7	16	406.4	10 7/8	276.2	197	89.4	218	98.9	33 5/16	846.6	36 5/8	929.5
24AAA561A0030061	0	Y	N	N	N	35	889.0	45 11/16	1160.5	7/8	22.2	6 9/16	166.1	28 7/16	722.8	9 1/8	231.3	5/16	7.9	3	76.2	16 1/2	419.1	17	431.8	16 1/4	412.8	272	123.4	310	140.6	37 1/8	943.1	50 3/16	1274.9

208-230-1-60	208/230-3-60	460-3-60	575-3-60	Y=YES N=NO

NOTES:

1. CENTER OF GRAVITY ⊕ .

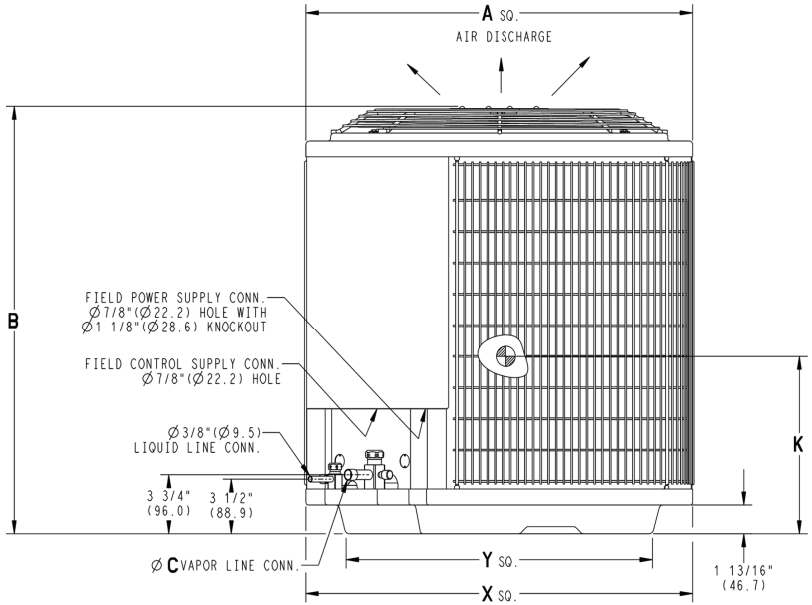

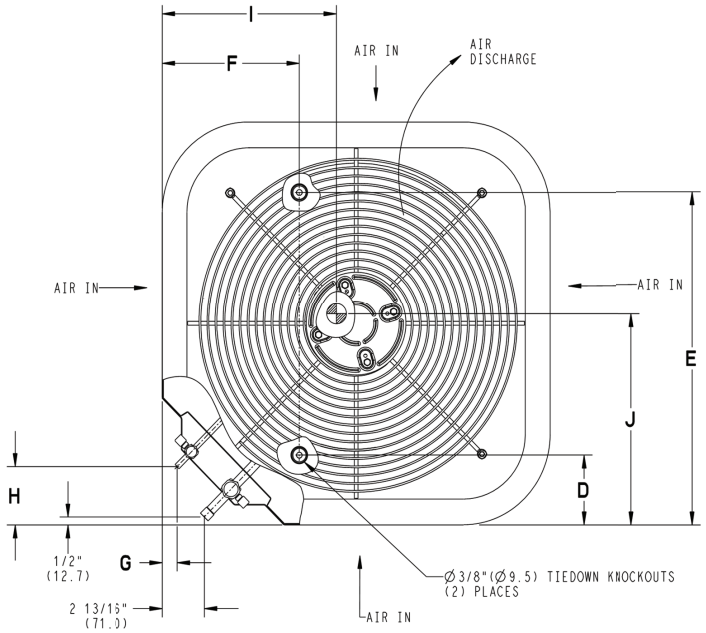

UNIT SIZE	"X" MINIMUM GROUND MOUNTING PAD APPLICATION DIMENSIONS		"Y" MINIMUM ROOF-TOP MOUNTING PAD APPLICATION DIMENSIONS	
-	23 1/8	587.3	17 7/8	454.6
18,24	25 3/4	654.0	20 7/16	518.5
30,36,42,48,60	31 3/16	792.5	22 15/16	583.2
49,61	35	889.0	26 3/4	679.7

NOTE: ALL DIMENSIONS IN INCH (MM)

U.S. ECCN: Not Subject to Regulation (N.S.R.)

-4 24AAA5 added 49 and 61 size

CLEARANCES

Clearances (various examples)

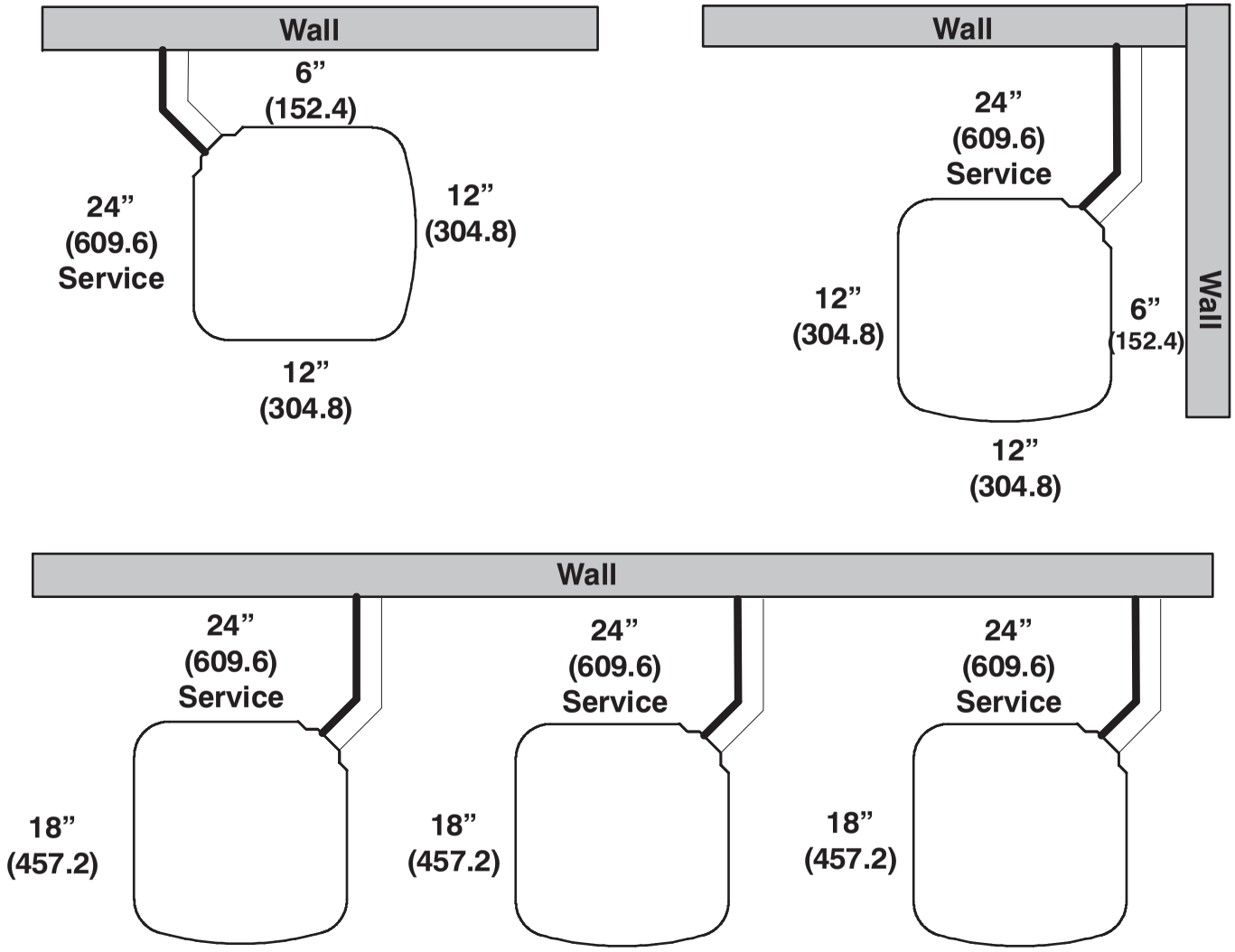

Note: Numbers in ( ) = mm

IMPORTANT: When installing multiple units in an alcove, roof well, or partially enclosed area, ensure there is adequate ventilation to prevent re-circulation of discharge air.

TESTED AHRI COMBINATION RATINGS

NOTE: Ratings contained in this document are subject to change at any time.

For AHRI ratings certificates, please refer to the AHRI directory www.ahridirectory.org

Additional ratings and system combinations can be accessed via the Carrier database at: www.MyCarrierRatings.com

For performance data at specific application &/or design conditions with various indoor unit combinations, the equipment performance calculator can be accessed at : http://rpmob.wrightsoft.com/

UNIT SIZE – SERIES	INDOOR MODEL	AHRI STANDARD RATINGS						FURNACE MODEL
		COOLING						
		CAPACITY	FACTORY ENHANCE	SEER			EER	
				STANDARD	TDR	TXV		
18–30	*CAP**1917AL*	17,200	TXV		14.00		12.20	
24–30	*CAP**2517AL*	24,000	TXV		14.50		12.50	
30–30	*CAP**3721AL*	29,600	TXV		14.50		12.50	
36–30	*CAP**3721AL*	34,600	TXV		14.00		12.20	
42–30	*CAP**4321AL*	40,000	TXV		14.00		12.20	
48–30	*CAP**6124AL*	45,000	TXV		14.50		11.70	
49–30	*CAP**6024AL*	46,000	TXV		14.50		12.50	
60–30	*CAP**6024AL*	56,500	TXV		14.00		11.70	
61–30	*CNPV*6124AL*	55,000	TXV		15.00		13.00	

AHRI — Air Conditioning, Heating & Refrigeration Institute
EER — Energy Efficiency Ratio – 80°F (26.6°C) indoor db/67°F (19.4°C) indoor wb & 95°F (35°C) outdoor wb.
SEER — Seasonal Energy Efficiency Ratio
TDR —Time–Delay Relay. In most cases, only one method should be used to achieve TDR function. Using more than one method in a system may cause degradation in performance.
Use either the accessory Time–Delay Relay, KAATD0101TDR, or a furnace equipped with TDR. Most Carrier furnaces are equipped with TDR.

NOTES:

1. Ratings are net values reflecting the effects of circulating fan motor heat. Supplemental electric heat is not included.
2. Tested outdoor/indoor combinations have been tested in accordance with DOE test procedures for central air conditioners. Ratings for other combinations are determined under DOE computer simulation procedures.
3. Determine actual CFM values obtainable for your system by referring to fan performance data in fan coil or furnace coil literature.
4. Do not apply with capillary tube coils as performance and reliability are significantly affected.

DETAILED COOLING CAPACITIES#

EVAPORATOR AIR		CONDENSER ENTERING AIR TEMPERATURES °F (°C)																	
		75 (23.9)			85 (29.4)			95 (35)			105 (40.6)			115 (46.1)			125 (51.7)		
CFM	EWB °F (°C)	Capacity MBtuh†		Total System KW**	Capacity MBtuh†		Total System KW**	Capacity MBtuh†		Total System KW**	Capacity MBtuh†		Total System KW**	Capacity MBtuh†		Total System KW**	Capacity MBtuh†		Total System KW**
		Total	Sens‡		Total	Sens‡		Total	Sens‡		Total	Sens‡		Total	Sens‡		Total	Sens‡	
24AAA518–30 Outdoor Section With CAP3017AL* Indoor Section**																			
525	72 (22.2)	20.56	10.96	1.11	19.77	10.67	1.25	18.93	10.35	1.40	17.98	10.00	1.58	16.91	9.62	1.77	15.70	9.18	2.00
	67 (19.4)	18.80	13.55	1.12	18.03	13.23	1.26	17.20	12.89	1.41	16.29	12.52	1.58	15.26	12.11	1.78	14.11	11.66	2.00
	63 (17.2)††	17.52	13.07	1.13	16.75	12.73	1.27	15.94	12.37	1.42	15.04	11.98	1.59	14.05	11.55	1.78	12.94	11.08	2.01
	62 (16.7)	17.21	16.10	1.13	16.46	15.76	1.27	15.67	15.40	1.42	14.89	14.89	1.59	14.11	14.11	1.78	13.23	13.23	2.00
	57 (13.9)	16.82	16.82	1.14	16.21	16.21	1.27	15.57	15.57	1.42	14.86	14.86	1.59	14.08	14.08	1.78	13.20	13.20	2.00
600	72 (22.2)	20.91	11.56	1.14	20.10	11.27	1.27	19.23	10.95	1.43	18.25	10.60	1.60	17.16	10.22	1.80	15.91	9.78	2.02
	67 (19.4)	19.14	14.52	1.15	18.35	14.21	1.28	17.50	13.87	1.44	16.56	13.49	1.61	15.51	13.08	1.80	14.33	12.62	2.03
	63 (17.2)††	17.86	13.98	1.16	17.08	13.64	1.29	16.24	13.28	1.44	15.32	12.88	1.61	14.30	12.45	1.81	13.16	11.97	2.03
	62 (16.7)	17.61	17.44	1.16	16.94	16.94	1.29	16.27	16.27	1.44	15.53	15.53	1.61	14.70	14.70	1.81	13.77	13.77	2.03
	57 (13.9)	17.54	17.54	1.16	16.91	16.91	1.29	16.24	16.24	1.44	15.50	15.50	1.61	14.68	14.68	1.81	13.75	13.75	2.03
675	72 (22.2)	21.16	12.15	1.16	20.33	11.86	1.30	19.44	11.54	1.46	18.44	11.19	1.63	17.32	10.80	1.83	16.05	10.37	2.05
	67 (19.4)	19.39	15.48	1.17	18.58	15.16	1.31	17.72	14.81	1.46	16.77	14.44	1.63	15.69	14.03	1.83	14.49	13.56	2.05
	63 (17.2)††	18.12	14.87	1.18	17.31	14.52	1.32	16.46	14.16	1.47	15.53	13.77	1.64	14.49	13.33	1.84	13.33	12.84	2.06
	62 (16.7)	18.17	18.17	1.18	17.52	17.52	1.32	16.82	16.82	1.47	16.05	16.05	1.64	15.19	15.19	1.83	14.22	14.22	2.06
	57 (13.9)	18.14	18.14	1.18	17.49	17.49	1.32	16.79	16.79	1.47	16.03	16.03	1.64	15.17	15.17	1.83	14.20	14.20	2.06

EVAPORATOR AIR		CONDENSER ENTERING AIR TEMPERATURES °F (°C)																	
		75 (23.9)			85 (29.4)			95 (35)			105 (40.6)			115 (46.1)			125 (51.7)		
CFM	EWB °F (°C)	Capacity MBtuh†		Total System KW**	Capacity MBtuh†		Total System KW**	Capacity MBtuh†		Total System KW**	Capacity MBtuh†		Total System KW**	Capacity MBtuh†		Total System KW**	Capacity MBtuh†		Total System KW**
		Total	Sens‡		Total	Sens‡		Total	Sens‡		Total	Sens‡		Total	Sens‡		Total	Sens‡	
24AAA524–30 Outdoor Section With CAP2517AL* Indoor Section**																			
700	72 (22.2)	28.74	15.34	1.56	27.56	14.90	1.73	26.33	14.44	1.92	25.00	13.95	2.14	23.56	13.43	2.40	21.93	12.85	2.70
	67 (19.4)	26.25	18.97	1.56	25.16	18.51	1.73	24.00	18.04	1.92	22.78	17.53	2.14	21.42	16.99	2.40	19.90	16.39	2.70
	63 (17.2)††	24.47	18.29	1.56	23.43	17.84	1.73	22.35	17.34	1.92	21.19	16.83	2.14	19.88	16.27	2.40	18.47	15.67	2.71
	62 (16.7)	23.96	22.48	1.56	22.96	22.01	1.73	21.90	21.51	1.92	20.82	20.82	2.14	19.79	19.79	2.40	18.66	18.66	2.70
	57 (13.9)	23.35	23.35	1.56	22.55	22.55	1.73	21.70	21.70	1.92	20.79	20.79	2.14	19.76	19.76	2.40	18.63	18.63	2.70
800	72 (22.2)	29.22	16.18	1.60	28.00	15.74	1.77	26.71	15.27	1.96	25.33	14.78	2.18	23.85	14.26	2.44	22.16	13.67	2.73
	67 (19.4)	26.70	20.31	1.60	25.57	19.85	1.77	24.37	19.37	1.96	23.09	18.86	2.18	21.71	18.31	2.44	20.15	17.70	2.74
	63 (17.2)††	24.93	19.55	1.60	23.86	19.08	1.77	22.73	18.59	1.96	21.52	18.07	2.18	20.17	17.49	2.44	18.72	16.88	2.74
	62 (16.7)	24.49	24.27	1.60	23.54	23.54	1.77	22.63	22.63	1.96	21.65	21.65	2.18	20.56	20.56	2.44	19.34	19.34	2.74
	57 (13.9)	24.36	24.36	1.60	23.50	23.50	1.77	22.60	22.60	1.96	21.62	21.62	2.18	20.53	20.53	2.44	19.32	19.32	2.74
900	72 (22.2)	29.57	17.01	1.63	28.30	16.56	1.80	26.98	16.09	2.00	25.56	15.60	2.22	24.03	15.06	2.47	22.31	14.47	2.77
	67 (19.4)	27.04	21.62	1.63	25.87	21.16	1.80	24.63	20.66	1.99	23.32	20.15	2.22	21.91	19.59	2.47	20.32	18.96	2.77
	63 (17.2)††	25.27	20.77	1.63	24.17	20.29	1.80	23.00	19.80	2.00	21.76	19.27	2.22	20.38	18.68	2.48	18.89	18.04	2.78
	62 (16.7)	25.23	25.23	1.63	24.32	24.32	1.80	23.36	23.36	2.00	22.32	22.32	2.22	21.19	21.19	2.47	19.90	19.90	2.77
	57 (13.9)	25.19	25.19	1.63	24.28	24.28	1.80	23.33	23.33	2.00	22.30	22.30	2.22	21.16	21.16	2.47	19.87	19.87	2.77

See notes on page 16

DETAILED COOLING CAPACITIES# CONTINUED

EVAPORATOR AIR		CONDENSER ENTERING AIR TEMPERATURES °F (°C)																	
		75 (23.9)			85 (29.4)			95 (35)			105 (40.6)			115 (46.1)			125 (51.7)		
CFM	EWB °F (°C)	Capacity MBtuh†		Total System KW**	Capacity MBtuh†		Total System KW**	Capacity MBtuh†		Total System KW**	Capacity MBtuh†		Total System KW**	Capacity MBtuh†		Total System KW**	Capacity MBtuh†		Total System KW**
		Total	Sens‡		Total	Sens‡		Total	Sens‡		Total	Sens‡		Total	Sens‡		Total	Sens‡	
24AAA530–30 Outdoor Section With CAP**3721AL* Indoor Section																			
875	72 (22.2)	34.17	17.94	1.96	32.63	17.38	2.16	31.02	16.79	2.40	29.33	16.18	2.66	27.51	15.54	2.98	25.57	14.86	3.35
	67 (19.4)	31.02	22.10	1.97	29.61	21.53	2.17	28.14	20.94	2.40	26.58	20.31	2.66	24.91	19.66	2.98	23.13	18.96	3.35
	63 (17.2)††	28.77	21.25	1.97	27.46	20.67	2.17	26.08	20.08	2.40	24.62	19.45	2.67	23.07	18.79	2.98	21.39	18.09	3.35
	62 (16.7)	28.19	26.15	1.97	26.92	25.56	2.17	25.60	25.36	2.40	24.34	24.34	2.66	23.11	23.11	2.98	21.76	21.76	3.35
	57 (13.9)	27.51	27.51	1.97	26.51	26.51	2.17	25.45	25.45	2.40	24.30	24.30	2.66	23.07	23.07	2.98	21.73	21.73	3.35
1000	72 (22.2)	34.79	18.95	2.01	33.19	18.37	2.21	31.51	17.78	2.44	29.73	17.16	2.71	27.85	16.51	3.03	25.85	15.82	3.40
	67 (19.4)	31.61	23.69	2.01	30.13	23.11	2.21	28.60	22.50	2.44	26.98	21.87	2.71	25.25	21.19	3.03	23.42	20.49	3.40
	63 (17.2)††	29.34	22.73	2.02	27.97	22.14	2.22	26.53	21.53	2.45	25.01	20.89	2.71	23.40	20.21	3.03	21.68	19.49	3.40
	62 (16.7)	28.87	28.71	2.01	27.71	27.71	2.22	26.56	26.56	2.45	25.33	25.33	2.71	24.00	24.00	3.03	22.57	22.57	3.40
	57 (13.9)	28.75	28.75	2.01	27.66	27.66	2.22	26.52	26.52	2.45	25.29	25.29	2.71	23.97	23.97	3.03	22.54	22.54	3.40
1125	72 (22.2)	35.24	19.93	2.06	33.57	19.35	2.26	31.84	18.74	2.49	30.02	18.11	2.76	28.08	17.45	3.08	26.02	16.75	3.45
	67 (19.4)	32.05	25.24	2.06	30.53	24.64	2.26	28.94	24.02	2.49	27.27	23.37	2.76	25.51	22.69	3.08	23.63	21.95	3.45
	63 (17.2)††	29.77	24.16	2.06	28.34	23.56	2.26	26.86	22.94	2.49	25.30	22.28	2.76	23.65	21.59	3.08	21.90	20.83	3.45
	62 (16.7)	29.83	29.83	2.06	28.67	28.67	2.26	27.45	27.45	2.49	26.15	26.15	2.76	24.74	24.74	3.07	23.23	23.23	3.45
	57 (13.9)	29.79	29.79	2.06	28.63	28.63	2.26	27.41	27.41	2.49	26.11	26.11	2.76	24.71	24.71	3.07	23.20	23.20	3.45

EVAPORATOR AIR		CONDENSER ENTERING AIR TEMPERATURES °F (°C)																	
		75 (23.9)			85 (29.4)			95 (35)			105 (40.6)			115 (46.1)			125 (51.7)		
CFM	EWB °F (°C)	Capacity MBtuh†		Total System KW**	Capacity MBtuh†		Total System KW**	Capacity MBtuh†		Total System KW**	Capacity MBtuh†		Total System KW**	Capacity MBtuh†		Total System KW**	Capacity MBtuh†		Total System KW**
		Total	Sens‡		Total	Sens‡		Total	Sens‡		Total	Sens‡		Total	Sens‡		Total	Sens‡	
24AAA536–30 Outdoor Section With CAP**3721AL* Indoor Section																			
1050	72 (22.2)	41.37	21.28	2.29	39.61	20.66	2.57	37.34	19.87	2.85	34.80	19.01	3.15	32.22	18.13	3.51	29.74	17.32	3.96
	67 (19.4)	38.24	26.63	2.29	36.68	26.02	2.57	34.60	25.21	2.84	32.26	24.32	3.13	29.89	23.42	3.49	27.60	22.56	3.93
	63 (17.2)††	35.82	25.73	2.30	34.41	25.13	2.57	32.47	24.32	2.84	30.30	23.42	3.12	28.06	22.51	3.48	25.93	21.65	3.92
	62 (16.7)	35.20	31.75	2.31	33.85	31.13	2.57	32.01	31.87	2.83	30.18	30.18	3.12	28.33	28.33	3.48	26.52	26.52	3.92
	57 (13.9)	34.54	34.54	2.31	33.43	33.43	2.58	31.90	31.90	2.83	30.14	30.14	3.12	28.29	28.29	3.48	26.48	26.48	3.92
1200	72 (22.2)	41.83	22.41	2.34	39.99	21.78	2.63	37.64	20.98	2.91	35.04	20.11	3.22	32.39	19.23	3.58	29.84	18.39	4.02
	67 (19.4)	38.76	28.48	2.35	37.13	27.85	2.62	34.98	27.03	2.90	32.57	26.13	3.19	30.13	25.21	3.55	27.79	24.32	3.99
	63 (17.2)††	36.39	27.47	2.36	34.91	26.85	2.63	32.90	26.03	2.89	30.64	25.11	3.18	28.35	24.18	3.54	26.16	23.28	3.98
	62 (16.7)	35.97	35.97	2.36	34.75	34.75	2.63	33.08	33.08	2.89	31.17	31.17	3.18	29.19	29.19	3.54	27.24	27.24	3.99
	57 (13.9)	35.91	35.91	2.36	34.70	34.70	2.63	33.04	33.04	2.89	31.13	31.13	3.18	29.16	29.16	3.54	27.22	27.22	3.99
1350	72 (22.2)	42.12	23.50	2.40	40.23	22.86	2.69	37.82	22.05	2.97	35.16	21.18	3.28	32.45	20.29	3.64	29.86	19.44	4.09
	67 (19.4)	39.13	30.28	2.40	37.44	29.64	2.68	35.23	28.80	2.96	32.78	27.87	3.25	30.31	26.93	3.61	27.93	25.97	4.06
	63 (17.2)††	36.81	29.15	2.41	35.26	28.52	2.69	33.20	27.67	2.95	30.89	26.73	3.24	28.56	25.77	3.60	26.36	26.11	4.04
	62 (16.7)	37.06	37.06	2.41	35.74	35.74	2.68	33.96	33.96	2.95	31.94	31.94	3.25	29.84	29.84	3.61	27.79	27.79	4.05
	57 (13.9)	37.01	37.01	2.41	35.70	35.70	2.68	33.92	33.92	2.95	31.90	31.90	3.25	29.81	29.81	3.61	27.76	27.76	4.05

See notes on page 16

DETAILED COOLING CAPACITIES# CONTINUED

EVAPORATOR AIR		CONDENSER ENTERING AIR TEMPERATURES °F (°C)																	
		75 (23.9)			85 (29.4)			95 (35)			105 (40.6)			115 (46.1)			125 (51.7)		
CFM	EWB °F (°C)	Capacity MBtuh†		Total System KW**	Capacity MBtuh†		Total System KW**	Capacity MBtuh†		Total System KW**	Capacity MBtuh†		Total System KW**	Capacity MBtuh†		Total System KW**	Capacity MBtuh†		Total System KW**
		Total	Sens‡		Total	Sens‡		Total	Sens‡		Total	Sens‡		Total	Sens‡		Total	Sens‡	
24AAA542–30 Outdoor Section With CAP**4321AL* Indoor Section																			
1200	72 (22.2)	48.28	25.79	2.74	46.16	24.99	3.00	43.98	24.17	3.29	41.66	23.31	3.63	39.16	22.40	4.04	36.41	21.40	4.50
	67 (19.4)	43.89	31.69	2.73	41.97	30.88	2.98	40.00	30.07	3.28	37.90	29.20	3.62	35.60	28.27	4.02	33.08	27.26	4.49
	63 (17.2)††	40.73	30.48	2.72	38.96	29.68	2.98	37.13	28.87	3.27	35.18	28.01	3.61	33.05	27.08	4.01	30.68	26.05	4.48
	62 (16.7)	39.99	37.46	2.72	38.27	36.64	2.97	36.52	35.78	3.27	34.69	34.69	3.61	32.98	32.98	4.01	31.05	31.05	4.48
	57 (13.9)	38.93	38.93	2.71	37.58	37.58	2.97	36.15	36.15	3.27	34.63	34.63	3.61	32.93	32.93	4.01	31.01	31.01	4.48
1400	72 (22.2)	49.27	27.40	2.83	47.02	26.58	3.08	44.73	25.75	3.37	42.31	24.87	3.71	39.69	23.94	4.11	36.83	22.93	4.58
	67 (19.4)	44.84	34.26	2.81	42.81	33.44	3.06	40.73	32.59	3.36	38.54	31.71	3.70	36.15	30.76	4.10	33.53	29.71	4.57
	63 (17.2)††	41.64	32.87	2.80	39.77	32.05	3.05	37.85	31.21	3.35	35.82	30.33	3.69	33.59	29.38	4.09	31.14	28.32	4.56
	62 (16.7)	41.13	40.72	2.80	39.50	39.50	3.05	37.95	37.95	3.35	36.27	36.27	3.69	34.43	34.43	4.10	32.35	32.35	4.56
	57 (13.9)	40.93	40.93	2.80	39.44	39.44	3.05	37.89	37.89	3.35	36.22	36.22	3.69	34.38	34.38	4.10	32.31	32.31	4.56
1575	72 (22.2)	49.87	28.75	2.90	47.56	27.92	3.15	45.18	27.07	3.44	42.68	26.18	3.78	39.99	25.24	4.18	37.06	24.23	4.65
	67 (19.4)	45.42	36.42	2.88	43.33	35.58	3.13	41.19	34.72	3.43	38.93	33.82	3.77	36.49	32.84	4.17	33.83	31.75	4.64
	63 (17.2)††	42.22	34.88	2.87	40.28	34.04	3.12	38.30	33.18	3.42	36.20	32.27	3.76	33.93	31.29	4.16	31.44	30.18	4.63
	62 (16.7)	42.38	42.38	2.87	40.78	40.78	3.13	39.13	39.13	3.42	37.35	37.35	3.77	35.40	35.40	4.17	33.21	33.21	4.64
	57 (13.9)	42.32	42.32	2.87	40.73	40.73	3.13	39.08	39.08	3.42	37.31	37.31	3.77	35.35	35.35	4.17	33.17	33.17	4.64

EVAPORATOR AIR		CONDENSER ENTERING AIR TEMPERATURES °F (°C)																	
		75 (23.9)			85 (29.4)			95 (35)			105 (40.6)			115 (46.1)			125 (51.7)		
CFM	EWB °F (°C)	Capacity MBtuh†		Total System KW**	Capacity MBtuh†		Total System KW**	Capacity MBtuh†		Total System KW**	Capacity MBtuh†		Total System KW**	Capacity MBtuh†		Total System KW**	Capacity MBtuh†		Total System KW**
		Total	Sens‡		Total	Sens‡		Total	Sens‡		Total	Sens‡		Total	Sens‡		Total	Sens‡	
24AAA548–30 Outdoor Section With CAP**6124AL* Indoor Section																			
1400	72 (22.2)	53.91	26.70	3.12	51.70	25.95	3.46	49.29	25.14	3.81	46.61	24.25	4.20	43.50	23.23	4.66	39.94	22.07	5.22
	67 (19.4)	49.07	33.08	3.15	47.03	32.30	3.47	44.83	31.48	3.81	42.36	30.56	4.19	39.52	29.52	4.65	36.26	28.33	5.22
	63 (17.2)††	45.60	31.80	3.16	43.67	31.02	3.48	41.61	30.19	3.81	39.31	29.27	4.18	36.66	28.22	4.64	33.61	27.02	5.22
	62 (16.7)	44.81	39.26	3.16	42.96	38.43	3.48	41.03	40.90	3.80	39.14	39.14	4.18	36.99	36.99	4.64	34.49	34.49	5.22
	57 (13.9)	44.02	44.02	3.16	42.51	42.51	3.48	40.91	40.91	3.80	39.08	39.08	4.18	36.94	36.94	4.64	34.44	34.44	5.22
1600	72 (22.2)	54.74	28.18	3.20	52.46	27.42	3.54	49.97	26.60	3.89	47.17	25.68	4.28	43.95	24.64	4.74	40.30	23.48	5.30
	67 (19.4)	49.91	35.43	3.22	47.78	34.64	3.55	45.50	33.80	3.89	42.95	32.87	4.27	40.01	31.79	4.73	36.67	30.58	5.30
	63 (17.2)††	46.41	33.99	3.23	44.41	33.19	3.55	42.28	32.35	3.89	39.89	31.40	4.26	37.15	30.32	4.72	34.04	29.09	5.30
	62 (16.7)	45.97	45.97	3.23	44.36	44.36	3.55	42.62	42.62	3.89	40.65	40.65	4.27	38.35	38.35	4.73	35.68	35.68	5.30
	57 (13.9)	45.90	45.90	3.23	44.29	44.29	3.55	42.56	42.56	3.89	40.59	40.59	4.27	38.30	38.30	4.73	35.63	35.63	5.30
1800	72 (22.2)	55.35	29.59	3.27	53.00	28.82	3.62	50.43	27.99	3.97	47.55	27.07	4.35	44.26	26.02	4.82	40.51	24.83	5.38
	67 (19.4)	50.51	37.70	3.29	48.34	36.90	3.63	45.99	36.05	3.97	43.37	35.09	4.35	40.38	33.98	4.81	37.00	32.68	5.38
	63 (17.2)††	47.02	36.10	3.31	44.97	35.29	3.63	42.77	34.42	3.97	40.33	33.45	4.34	37.54	32.33	4.81	34.39	30.98	5.38
	62 (16.7)	47.51	47.51	3.31	45.80	45.80	3.63	43.96	43.96	3.97	41.87	41.87	4.35	39.44	39.44	4.81	36.63	36.63	5.38
	57 (13.9)	47.45	47.45	3.31	45.74	45.74	3.63	43.91	43.91	3.97	41.82	41.82	4.35	39.40	39.40	4.81	36.58	36.58	5.38

See notes on page 16

DETAILED COOLING CAPACITIES# CONTINUED

EVAPORATOR AIR		CONDENSER ENTERING AIR TEMPERATURES °F (°C)																	
		75 (23.9)			85 (29.4)			95 (35)			105 (40.6)			115 (46.1)			125 (51.7)		
CFM	EWB °F (°C)	Capacity MBtuh†		Total Sys. KW**	Capacity MBtuh†		Total Sys. KW**	Capacity MBtuh†		Total Sys. KW**	Capacity MBtuh†		Total Sys. KW**	Capacity MBtuh†		Total Sys. KW**	Capacity MBtuh†		Total Sys. KW**
		Total	Sens‡		Total	Sens‡		Total	Sens‡		Total	Sens‡		Total	Sens‡		Total	Sens‡	
24AAA549–30 Outdoor Section With CAP6024** Indoor Section**																			
1400	72 (22.2)	44.96	44.96	2.96	43.24	43.24	3.31	41.42	41.42	3.68	39.48	39.48	4.07	37.41	37.41	4.50	35.13	35.13	4.97
	67 (19.4)	45.83	40.58	2.94	43.71	39.59	3.30	41.58	41.20	3.68	39.55	39.55	4.07	37.46	37.46	4.50	35.17	35.17	4.97
	63 (17.2)††	46.51	32.87	2.92	44.27	31.94	3.30	41.97	30.99	3.67	39.55	30.00	4.07	37.01	28.97	4.50	34.29	27.86	4.97
	62 (16.7)	50.34	34.29	2.82	47.86	33.33	3.22	45.32	32.35	3.62	42.67	31.35	4.04	39.88	30.30	4.49	36.92	29.19	4.97
	57 (13.9)	55.58	27.87	2.66	52.81	26.89	3.10	49.96	25.90	3.53	46.99	24.88	3.98	43.89	23.82	4.45	40.59	22.72	4.95
1600	72 (22.2)	46.87	46.87	2.98	44.99	44.99	3.35	43.03	43.03	3.73	40.92	40.92	4.13	38.67	38.67	4.57	36.23	36.23	5.05
	67 (19.4)	47.04	46.57	2.98	45.07	45.07	3.35	43.08	43.08	3.73	40.97	40.97	4.13	38.72	38.72	4.57	36.27	36.27	5.05
	63 (17.2)††	47.41	35.02	2.97	45.06	34.06	3.35	42.65	33.08	3.74	40.14	32.06	4.14	37.49	30.98	4.57	34.68	29.83	5.05
	62 (16.7)	51.23	36.58	2.86	48.66	35.60	3.27	46.00	34.60	3.68	43.25	33.56	4.11	40.37	32.48	4.56	37.31	31.33	5.04
	57 (13.9)	56.55	29.30	2.70	53.65	28.30	3.14	50.66	27.28	3.59	47.58	26.24	4.04	44.35	25.17	4.52	40.94	24.04	5.03
1800	72 (22.2)	48.44	48.44	3.01	46.42	46.42	3.39	44.30	44.30	3.78	42.07	42.07	4.19	39.68	39.68	4.63	37.09	37.09	5.12
	67 (19.4)	48.50	48.50	3.01	46.48	46.48	3.39	44.35	44.35	3.78	42.11	42.11	4.19	39.72	39.72	4.63	37.13	37.13	5.12
	63 (17.2)††	48.09	37.06	3.02	45.64	36.07	3.41	43.15	35.05	3.80	40.56	33.99	4.21	37.85	32.87	4.65	35.01	31.63	5.12
	62 (16.7)	51.92	38.78	2.91	49.24	37.77	3.32	46.51	36.74	3.74	43.67	35.67	4.17	40.72	34.54	4.63	37.63	33.32	5.12
	57 (13.9)	57.26	30.65	2.74	54.24	29.63	3.19	51.16	28.60	3.64	47.97	27.53	4.11	44.65	26.44	4.59	41.16	25.30	5.10

EVAPORATOR AIR		CONDENSER ENTERING AIR TEMPERATURES °F (°C)																	
		75 (23.9)			85 (29.4)			95 (35)			105 (40.6)			115 (46.1)			125 (51.7)		
CFM	EWB °F (°C)	Capacity MBtuh†		Total System KW**	Capacity MBtuh†		Total System KW**	Capacity MBtuh†		Total System KW**	Capacity MBtuh†		Total System KW**	Capacity MBtuh†		Total System KW**	Capacity MBtuh†		Total System KW**
24AAA560–30 Outdoor Section With CAP6024AL* Indoor Section**																			
1750	72 (22.2)	68.41	35.82	4.01	65.35	34.67	4.39	62.15	33.49	4.86	58.70	32.23	5.39	55.01	30.89	5.96	50.87	29.41	6.55
	67 (19.4)	62.24	44.04	4.01	59.41	42.88	4.38	56.50	41.69	4.83	53.38	40.43	5.35	50.00	39.08	5.91	46.23	37.59	6.49
	63 (17.2)††	57.78	42.37	4.02	55.13	41.19	4.37	52.41	39.99	4.81	49.54	38.75	5.32	46.39	37.40	5.87	42.89	35.91	6.45
	62 (16.7)	56.92	52.17	4.02	54.40	50.96	4.37	51.84	49.69	4.81	49.16	49.16	5.32	46.64	46.64	5.88	43.73	43.73	6.46
	57 (13.9)	55.64	55.64	4.02	53.56	53.56	4.37	51.43	51.43	4.81	49.13	49.13	5.32	46.56	46.56	5.88	43.68	43.68	6.46
2000	72 (22.2)	69.54	37.55	4.10	66.36	36.39	4.49	63.04	35.18	4.96	59.50	33.91	5.49	55.63	32.53	6.06	51.36	31.03	6.66
	67 (19.4)	63.30	46.83	4.11	60.35	45.64	4.47	57.34	44.44	4.93	54.11	43.16	5.45	50.61	41.77	6.01	46.74	40.24	6.60
	63 (17.2)††	58.79	44.95	4.11	56.04	43.76	4.47	53.23	42.55	4.91	50.24	41.27	5.42	47.00	39.89	5.98	43.39	38.33	6.56
	62 (16.7)	58.25	55.83	4.11	55.72	55.33	4.47	53.37	53.37	4.91	50.91	50.91	5.43	48.16	48.16	5.99	45.09	45.09	6.58
	57 (13.9)	57.80	57.80	4.11	55.59	55.59	4.47	53.30	53.30	4.91	50.84	50.84	5.43	48.11	48.11	5.99	45.03	45.03	6.58
2250	72 (22.2)	70.37	39.17	4.20	67.10	37.99	4.59	63.67	36.77	5.06	60.02	35.48	5.59	56.04	34.08	6.17	51.66	32.55	6.76
	67 (19.4)	64.08	49.47	4.20	61.08	48.28	4.57	57.95	47.04	5.03	54.64	45.73	5.55	51.07	44.31	6.12	47.12	42.69	6.70
	63 (17.2)††	59.56	47.41	4.20	56.73	46.20	4.56	53.82	44.95	5.01	50.77	43.65	5.52	47.44	42.21	6.08	43.78	40.57	6.66
	62 (16.7)	59.69	59.69	4.20	57.32	57.32	4.56	54.90	54.90	5.02	52.28	52.28	5.53	49.41	49.41	6.10	46.17	46.17	6.69
	57 (13.9)	59.58	59.58	4.20	57.25	57.25	4.56	54.83	54.83	5.02	52.23	52.23	5.53	49.35	49.35	6.10	46.12	46.12	6.69

See notes on page 16

DETAILED COOLING CAPACITIES# CONTINUED

EVAPORATOR AIR		CONDENSER ENTERING AIR TEMPERATURES °F (°C)																	
		75 (23.9)			85 (29.4)			95 (35)			105 (40.6)			115 (46.1)			125 (51.7)		
CFM	EWB °F (°C)	Capacity MBtuh†		Total Sys. KW**	Capacity MBtuh†		Total Sys. KW**	Capacity MBtuh†		Total Sys. KW**	Capacity MBtuh†		Total Sys. KW**	Capacity MBtuh†		Total Sys. KW**	Capacity MBtuh†		Total Sys. KW**
		Total	Sens‡		Total	Sens‡		Total	Sens‡		Total	Sens‡		Total	Sens‡		Total	Sens‡	
24AAA561–30 Outdoor Section With CNPV*6124 Indoor Section**																			
1750	72 (22.2)	56.19	56.19	3.59	53.95	53.95	3.96	51.53	51.53	4.36	48.93	48.93	4.81	46.09	46.09	5.32	42.99	42.99	5.90
	67 (19.4)	56.64	50.02	3.59	54.07	53.77	3.96	51.60	51.60	4.36	48.99	48.99	4.81	46.15	46.15	5.32	43.04	43.04	5.90
	63 (17.2)††	57.26	40.25	3.60	54.46	39.14	3.96	51.49	37.96	4.36	48.36	36.73	4.80	45.01	35.42	5.31	41.42	34.02	5.88
	62 (16.7)	61.60	41.91	3.60	58.54	40.77	3.97	55.32	39.59	4.38	51.90	38.34	4.83	48.28	37.03	5.33	44.40	35.63	5.90
	57 (13.9)	67.62	33.62	3.61	64.18	32.47	4.00	60.57	31.27	4.41	56.80	30.03	4.86	52.78	28.73	5.37	48.50	27.36	5.94
2000	72 (22.2)	58.30	58.30	3.69	55.88	55.88	4.06	53.27	53.27	4.46	50.48	50.48	4.92	47.45	47.45	5.42	44.15	44.15	6.00
	67 (19.4)	58.38	58.38	3.69	55.95	55.95	4.06	53.34	53.34	4.47	50.54	50.54	4.92	47.51	47.51	5.42	44.20	44.20	6.00
	63 (17.2)††	58.16	42.92	3.69	55.24	41.77	4.06	52.18	40.57	4.46	48.93	39.29	4.90	45.49	37.93	5.41	41.84	36.44	5.99
	62 (16.7)	62.53	44.78	3.70	59.33	43.61	4.07	56.00	42.40	4.48	52.47	41.12	4.93	48.75	39.76	5.43	44.80	38.29	6.01
	57 (13.9)	68.55	35.38	3.71	64.96	34.20	4.10	61.23	32.99	4.51	57.31	31.73	4.96	53.17	30.41	5.47	48.77	29.02	6.04
2250	72 (22.2)	60.03	60.03	3.79	57.44	57.44	4.16	54.67	54.67	4.57	51.71	51.71	5.02	48.52	48.52	5.53	45.05	45.05	6.11
	67 (19.4)	60.10	60.10	3.79	57.51	57.51	4.16	54.74	54.74	4.57	51.77	51.77	5.02	48.57	48.57	5.53	45.09	45.09	6.11
	63 (17.2)††	58.84	45.45	3.79	55.83	44.27	4.16	52.68	43.02	4.56	49.37	41.69	5.01	45.89	40.23	5.51	42.31	42.31	6.09
	62 (16.7)	63.21	47.52	3.80	59.93	46.32	4.17	56.49	45.07	4.58	52.89	43.74	5.03	49.12	42.30	5.53	45.19	44.77	6.11
	57 (13.9)	69.20	37.05	3.81	65.50	35.85	4.20	61.65	34.62	4.61	57.63	33.34	5.06	53.40	32.00	5.57	48.90	30.59	6.14

† Total and sensible capacities are net capacities. Blower motor heat has been subtracted.
‡ Sensible capacities shown are based on 80°F (27°C) entering air at the indoor coil. For sensible capacities at other than 80°F (27°C), deduct 835 Btuh (245 kW) per 1000 CFM (480 L/S) of indoor coil air for each degree below 80°F (27°C), or add 835 Btuh (245 kW) per 1000 CFM (480 L/S) of indoor coil air per degree above 80°F (27°C).
# Detailed cooling capacities are based on indoor and outdoor unit at the same elevation per AHRI standard 210/240–2008. If additional tubing length and/or indoor unit is located above outdoor unit, a slight variation in capacity may occur.
** System kw is total of indoor and outdoor unit kilowatts.
†† At TVA rating indoor condition (75°F edb/63°F ewb). All other indoor air temperatures are at 80°F edb.
NOTE: When the required data falls between the published data, interpolation may be performed. Extrapolation is not an acceptable practice.
EWB — Entering Wet Bulb

CONDENSER ONLY RATINGS*

SST °F (°C)		CONDENSER ENTERING AIR TEMPERATURES °F (°C)							
		55 (12.78)	65 (18.33)	75 (23.89)	85 (29.44)	95 (35.0)	105 (40.56)	115 (46.11)	125 (51.67)
24AAA518–30									
30 (–1.11)	TCG	16.10	14.90	13.90	12.90	11.90	11.00	9.90	8.80
	SDT	67.70	77.00	86.40	95.80	105.30	114.80	124.20	133.50
	KW	0.74	0.85	0.96	1.08	1.22	1.37	1.55	1.75
35 (1.67)	TCG	17.60	16.50	15.40	14.30	13.30	12.30	11.10	10.00
	SDT	68.80	78.10	87.40	96.90	106.30	115.60	125.00	134.30
	KW	0.74	0.84	0.96	1.08	1.22	1.38	1.55	1.76
40 (4.44)	TCG	19.30	18.10	17.00	15.90	14.80	13.60	12.40	11.20
	SDT	69.90	79.20	88.50	97.90	107.20	116.50	125.80	135.10
	KW	0.73	0.84	0.95	1.08	1.22	1.38	1.56	1.76
45 (7.22)	TCG	21.10	19.80	18.60	17.50	16.30	15.10	13.80	12.40
	SDT	71.10	80.40	89.60	98.90	108.20	117.50	126.70	135.90
	KW	0.72	0.83	0.95	1.08	1.22	1.38	1.56	1.77
50 (10.0)	TCG	22.90	21.60	20.40	19.20	17.90	16.60	15.20	13.80
	SDT	72.30	81.50	90.70	100.00	109.30	118.50	127.70	136.80
	KW	0.71	0.82	0.94	1.07	1.22	1.38	1.56	1.77
55 (12.78)	TCG	24.90	23.50	22.20	20.90	19.60	18.20	16.70	15.20
	SDT	73.50	82.70	91.90	101.20	110.40	119.60	128.70	137.80
	KW	0.70	0.81	0.93	1.07	1.21	1.38	1.56	1.77
24AAA524–30									
30 (–1.11)	TCG	21.10	19.90	18.80	17.60	16.50	15.30	14.10	12.90
	SDT	69.10	78.50	87.90	97.50	106.90	116.40	125.80	135.10
	KW	1.00	1.15	1.30	1.47	1.65	1.87	2.11	2.40
35 (1.67)	TCG	23.20	21.90	20.70	19.40	18.20	16.90	15.60	14.20
	SDT	70.30	79.70	89.20	98.60	108.00	117.30	126.60	135.90
	KW	1.01	1.15	1.30	1.47	1.66	1.87	2.11	2.40
40 (4.44)	TCG	25.50	24.10	22.70	21.40	20.00	18.60	17.20	15.70
	SDT	71.60	81.00	90.40	99.70	109.00	118.30	127.60	136.80
	KW	1.01	1.15	1.31	1.47	1.66	1.87	2.12	2.40
45 (7.22)	TCG	27.90	26.40	24.90	23.50	22.00	20.40	18.80	17.20
	SDT	73.10	82.40	91.60	100.90	110.10	119.30	128.50	137.70
	KW	1.01	1.16	1.31	1.48	1.66	1.87	2.12	2.41
50 (10.0)	TCG	30.50	28.90	27.30	25.70	24.00	22.30	20.60	18.80
	SDT	74.50	83.70	92.90	102.10	111.30	120.50	129.60	138.70
	KW	1.02	1.16	1.31	1.48	1.66	1.88	2.12	2.41
55 (12.78)	TCG	33.20	31.50	29.70	28.00	26.20	24.30	22.40	20.50
	SDT	76.00	85.20	94.30	103.50	112.60	121.70	130.70	139.70
	KW	1.02	1.16	1.31	1.48	1.67	1.88	2.12	2.41
24AAA530–30									
30 (–1.11)	TCG	24.90	23.60	22.30	21.00	19.60	18.30	16.80	15.20
	SDT	68.80	78.20	87.70	97.20	106.60	116.00	125.40	134.80
	KW	1.22	1.39	1.56	1.74	1.95	2.19	2.47	2.80
35 (1.67)	TCG	27.40	26.00	24.60	23.20	21.70	20.20	18.60	16.90
	SDT	70.00	79.40	88.80	98.10	107.50	116.90	126.20	135.50
	KW	1.23	1.39	1.56	1.75	1.96	2.20	2.48	2.81
40 (4.44)	TCG	30.10	28.60	27.00	25.50	23.90	22.20	20.50	18.70
	SDT	71.30	80.60	89.90	99.20	108.50	117.80	127.10	136.40
	KW	1.24	1.40	1.57	1.76	1.97	2.21	2.49	2.82
45 (7.22)	TCG	33.10	31.40	29.70	28.00	26.30	24.50	22.60	20.60
	SDT	72.70	81.90	91.10	100.40	109.60	118.90	128.10	137.30
	KW	1.24	1.40	1.57	1.76	1.97	2.22	2.50	2.83
50 (10.0)	TCG	36.20	34.40	32.50	30.70	28.80	26.80	24.80	22.60
	SDT	74.20	83.20	92.40	101.60	110.80	120.00	129.10	138.20
	KW	1.25	1.41	1.58	1.77	1.98	2.22	2.51	2.84
55 (12.78)	TCG	39.60	37.60	35.60	33.50	31.50	29.30	27.10	24.80
	SDT	75.70	84.70	93.80	102.90	112.00	121.10	130.20	139.20
	KW	1.25	1.41	1.58	1.77	1.98	2.23	2.52	2.85
24AAA536–30									
30 (–1.11)	TCG	25.60	27.80	27.80	26.60	24.80	22.60	20.40	18.40
	SDT	65.40	76.40	86.60	96.30	105.70	115.00	124.20	133.60
	KW	1.30	1.70	2.00	2.25	2.49	2.76	3.08	3.51
35 (1.67)	TCG	29.30	31.10	30.90	29.50	27.50	25.20	22.90	20.70
	SDT	66.70	77.60	87.70	97.20	106.50	115.80	125.00	134.30
	KW	1.28	1.68	1.98	2.23	2.47	2.74	3.08	3.50
40 (4.44)	TCG	33.10	34.60	34.10	32.50	30.30	27.80	25.30	23.00
	SDT	68.10	78.80	88.70	98.10	107.40	116.60	125.80	135.10
	KW	1.26	1.66	1.96	2.21	2.46	2.74	3.07	3.49
45 (7.22)	TCG	37.00	38.00	37.30	35.50	33.10	30.50	27.80	25.30
	SDT	69.40	79.90	89.70	99.10	108.30	117.40	126.60	135.80
	KW	1.24	1.64	1.94	2.20	2.45	2.73	3.07	3.50
50 (10.0)	TCG	40.70	41.40	40.40	38.40	35.90	33.00	30.20	27.50
	SDT	70.70	81.00	90.70	100.00	109.10	118.20	127.30	136.50
	KW	1.22	1.62	1.93	2.19	2.45	2.74	3.08	3.50
55 (12.78)	TCG	44.40	44.70	43.50	41.30	38.50	35.50	32.50	29.60
	SDT	71.80	82.00	91.60	100.80	110.00	119.00	128.00	137.10
	KW	1.20	1.61	1.92	2.19	2.46	2.75	3.09	3.52

See notes on page 19

CONDENSER ONLY RATINGS* CONTINUED

SST °F (°C)		CONDENSER ENTERING AIR TEMPERATURES °F (°C)							
		55 (12.78)	65 (18.33)	75 (23.89)	85 (29.44)	95 (35.0)	105 (40.56)	115 (46.11)	125 (51.67)
24AAA542–30									
30 (–1.11)	TCG	36.30	34.30	32.50	30.70	28.90	27.00	24.90	22.50
	SDT	67.70	77.20	86.70	96.20	105.80	115.20	124.60	134.00
	KW	1.77	1.99	2.23	2.50	2.79	3.13	3.53	3.99
35 (1.67)	TCG	40.00	37.80	35.80	33.90	31.90	29.80	27.50	25.00
	SDT	69.00	78.30	87.80	97.20	106.70	116.10	125.40	134.80
	KW	1.79	2.01	2.25	2.51	2.80	3.15	3.54	4.01
40 (4.44)	TCG	44.00	41.60	39.40	37.20	35.10	32.80	30.40	27.70
	SDT	70.30	79.60	88.90	98.30	107.60	117.00	126.30	135.60
	KW	1.81	2.03	2.26	2.52	2.82	3.16	3.56	4.03
45 (7.22)	TCG	48.30	45.60	43.20	40.90	38.50	36.10	33.50	30.60
	SDT	71.60	80.80	90.00	99.40	108.70	118.00	127.30	136.60
	KW	1.84	2.05	2.27	2.53	2.83	3.17	3.58	4.05
50 (10.0)	TCG	52.80	50.00	47.30	44.80	42.20	39.60	36.70	33.70
	SDT	73.00	82.10	91.30	100.60	109.80	119.10	128.40	137.50
	KW	1.86	2.07	2.29	2.55	2.84	3.19	3.60	4.07
55 (12.78)	TCG	57.70	54.60	51.70	49.00	46.20	43.30	40.30	37.00
	SDT	74.60	83.60	92.70	101.90	111.10	120.30	129.50	138.60
	KW	1.89	2.09	2.31	2.56	2.86	3.21	3.62	4.09
24AAA548–30									
30 (–1.11)	TCG	40.80	38.00	35.60	33.50	31.40	29.10	26.60	23.70
	SDT	69.00	78.10	87.30	96.60	106.00	115.30	124.50	133.70
	KW	2.01	2.38	2.69	2.97	3.28	3.65	4.13	4.75
35 (1.67)	TCG	44.70	41.80	39.30	37.10	34.80	32.30	29.50	26.40
	SDT	70.30	79.30	88.50	97.70	107.00	116.30	125.40	134.60
	KW	1.99	2.37	2.69	2.99	3.30	3.67	4.14	4.75
40 (4.44)	TCG	48.90	45.90	43.30	40.90	38.40	35.70	32.60	29.20
	SDT	71.70	80.60	89.80	99.00	108.20	117.30	126.50	135.50
	KW	1.97	2.36	2.69	3.00	3.32	3.69	4.16	4.76
45 (7.22)	TCG	53.30	50.30	47.60	45.00	42.20	39.30	35.90	32.20
	SDT	73.10	82.10	91.10	100.30	109.40	118.50	127.50	136.40
	KW	1.94	2.35	2.69	3.01	3.34	3.71	4.18	4.76
50 (10.0)	TCG	58.10	55.00	52.10	49.30	46.30	43.10	39.40	35.30
	SDT	74.70	83.60	92.60	101.70	110.70	119.70	128.60	137.40
	KW	1.90	2.32	2.68	3.01	3.35	3.73	4.19	4.77
55 (12.78)	TCG	63.30	60.00	57.00	53.90	50.60	47.00	43.00	38.60
	SDT	76.40	85.20	94.20	103.20	112.20	121.00	129.80	138.40
	KW	1.86	2.30	2.67	3.01	3.36	3.74	4.20	4.77
24AAA549–30									
30 (–1.11)	TCG	42.80	40.60	38.30	36.00	33.60	31.10	28.50	25.80
	SDT	67.80	77.20	86.60	96.00	105.40	114.70	124.00	133.30
	KW	2.00	2.29	2.58	2.87	3.17	3.51	3.90	4.35
35 (1.67)	TCG	47.40	44.80	42.30	39.70	37.10	34.40	31.60	28.60
	SDT	69.00	78.30	87.70	97.00	106.30	115.60	124.80	134.10
	KW	1.93	2.25	2.56	2.87	3.19	3.53	3.92	4.36
40 (4.44)	TCG	52.30	49.50	46.60	43.80	40.90	37.90	34.90	31.60
	SDT	70.40	79.60	88.80	98.00	107.20	116.50	125.70	134.80
	KW	1.82	2.18	2.52	2.85	3.19	3.55	3.94	4.38
45 (7.22)	TCG	57.80	54.60	51.40	48.20	45.00	41.70	38.30	34.80
	SDT	71.80	80.80	90.00	99.10	108.30	117.40	126.60	135.70
	KW	1.68	2.07	2.45	2.81	3.17	3.55	3.95	4.40
50 (10.0)	TCG	63.70	60.10	56.50	52.90	49.40	45.70	42.00	38.10
	SDT	73.20	82.20	91.30	100.30	109.40	118.50	127.50	136.50
	KW	1.49	1.93	2.34	2.74	3.13	3.53	3.95	4.41
55 (12.78)	TCG	70.10	66.00	62.00	58.00	54.10	50.00	45.90	41.60
	SDT	74.70	83.70	92.60	101.60	110.60	119.60	128.50	137.40
	KW	1.25	1.74	2.20	2.63	3.06	3.49	3.94	4.41
24AAA560–30									
30 (–1.11)	TCG	53.80	50.20	47.00	44.00	41.20	38.30	35.20	31.80
	SDT	71.80	80.60	89.70	98.90	108.10	117.40	126.50	135.60
	KW	3.08	3.18	3.40	3.73	4.14	4.62	5.14	5.69
35 (1.67)	TCG	59.10	55.20	51.70	48.60	45.50	42.30	38.80	35.10
	SDT	73.20	82.00	91.00	100.10	109.30	118.50	127.60	136.60
	KW	3.06	3.17	3.40	3.73	4.15	4.63	5.16	5.71
40 (4.44)	TCG	64.70	60.60	56.90	53.50	50.00	46.50	42.80	38.70
	SDT	74.70	83.40	92.40	101.40	110.60	119.70	128.70	137.60
	KW	3.03	3.16	3.39	3.73	4.16	4.65	5.18	5.74
45 (7.22)	TCG	70.70	66.40	62.40	58.70	54.90	51.10	46.90	42.50
	SDT	76.30	85.00	93.90	102.90	112.00	121.00	129.90	138.70
	KW	3.01	3.14	3.39	3.74	4.17	4.67	5.21	5.77
50 (10.0)	TCG	77.20	72.60	68.40	64.30	60.20	55.90	51.40	46.60
	SDT	78.20	86.80	95.60	104.50	113.50	122.40	131.20	139.80
	KW	2.97	3.12	3.38	3.75	4.20	4.70	5.25	5.81
55 (12.78)	TCG	84.20	79.30	74.70	70.30	65.80	61.10	56.10	50.80
	SDT	80.20	88.80	97.50	106.30	115.10	123.90	132.50	141.00
	KW	2.93	3.10	3.39	3.76	4.22	4.74	5.29	5.86

See notes on page 19

CONDENSER ONLY RATINGS* CONTINUED

SST °F (°C)		CONDENSER ENTERING AIR TEMPERATURES °F (°C)							
		55 (12.78)	65 (18.33)	75 (23.89)	85 (29.44)	95 (35.0)	105 (40.56)	115 (46.11)	125 (51.67)
24AAA561–30									
30 (–1.11)	TCG	48.00	45.70	43.30	40.70	38.00	35.10	31.90	28.60
	SDT	68.80	78.20	87.60	97.00	106.30	115.50	124.80	133.90
	KW	2.16	2.44	2.73	3.04	3.39	3.79	4.27	4.82
35 (1.67)	TCG	53.10	50.50	47.80	44.90	41.90	38.70	35.30	31.70
	SDT	70.20	79.50	88.80	98.10	107.30	116.50	125.70	134.80
	KW	2.16	2.45	2.74	3.06	3.41	3.82	4.29	4.84
40 (4.44)	TCG	58.70	55.70	52.60	49.40	46.10	42.60	38.90	35.00
	SDT	71.70	80.90	90.10	99.30	108.40	117.50	126.60	135.60
	KW	2.15	2.45	2.75	3.08	3.44	3.84	4.31	4.85
45 (7.22)	TCG	64.50	61.20	57.70	54.20	50.50	46.70	42.60	38.40
	SDT	73.30	82.30	91.40	100.50	109.60	118.60	127.60	136.60
	KW	2.14	2.45	2.77	3.10	3.46	3.87	4.33	4.87
50 (10.0)	TCG	70.80	67.00	63.20	59.20	55.20	51.00	46.50	41.90
	SDT	74.90	83.90	92.90	101.80	110.80	119.80	128.70	137.50
	KW	2.13	2.45	2.78	3.12	3.49	3.90	4.36	4.89
55 (12.78)	TCG	77.40	73.10	68.90	64.50	60.10	55.40	50.60	45.60
	SDT	76.70	85.50	94.40	103.30	112.10	121.00	129.80	138.50
	KW	2.12	2.46	2.79	3.14	3.52	3.93	4.39	4.92

* AHRI listing applies only to systems shown in Combination Ratings table.

KW – Outdoor Unit Kilowatts Only.

SDT – Saturated Temperature Leaving Compressor (°F)

SST – Saturated Temperature Entering Compressor (°F/°C)

TCG – Gross Cooling Capacity (1000 Btuh)

GUIDE SPECIFICATIONS
GENERAL

System Description

Outdoor-mounted, air-cooled, split-system air conditioner unit suitable for ground or rooftop installation. Unit consists of a hermetic compressor, an air-cooled coil, propeller-type condenser fan, and a control box. Unit will discharge supply air upward as shown on contract drawings. Unit will be used in a refrigeration circuit to match up to a packaged fan coil or coil unit.

Quality Assurance

— Unit will be rated in accordance with the latest edition of AHRI Standard 210.

— Unit will be certified for capacity and efficiency, and listed in the latest AHRI directory.

— Unit construction will comply with latest edition of ANSI/ ASHRAE and with NEC.

— Unit will be constructed in accordance with UL standards and will carry the UL label of approval. Unit will have c-UL-us approval.

— Unit cabinet will be capable of withstanding Federal Test Method Standard No. 141 (Method 6061) 500-hr salt spray test.

— Air-cooled condenser coils will be leak tested at 150 psig and pressure tested at 450 psig.

— Unit constructed in ISO9001 approved facility.

Delivery, Storage, and Handling

— Unit will be shipped as single package only and is stored and handled per unit manufacturer's recommendations.

Warranty (for inclusion by specifying engineer)

— U.S. and Canada only.

PRODUCTS

Equipment

Factory assembled, single piece, air-cooled air conditioner unit. Contained within the unit enclosure is all factory wiring, piping, controls, compressor, refrigerant charge Puron® (R-410A), and special features required prior to field start-up.

Unit Cabinet

— Unit cabinet will be constructed of galvanized steel, bonderized, and coated with a powder coat paint.

— 3 phase equipment available with dense grille only.

— Single phase equipment available with wide (W) or dense (A) grille option.

Fans

— Condenser fan will be direct-drive propeller type, discharging air upward.

— Condenser fan motors will be totally enclosed, 1-phase type with class B insulation and permanently lubricated bearings. Shafts will be corrosion resistant.

— Fan blades will be statically and dynamically balanced.

— Condenser fan openings will be equipped with coated steel wire safety guards.

Compressor

— Compressor will be hermetically sealed.

— Compressor will be mounted on rubber vibration isolators.

Condenser Coil

— Condenser coil will be air cooled.

— Coil will be constructed of aluminum fins mechanically bonded to copper tubes which are then cleaned, dehydrated, and sealed.

Refrigeration Components

— Refrigeration circuit components will include liquid-line shutoff valve with sweat connections, vapor-line shutoff valve with sweat connections, system charge of Puron® (R-410A) refrigerant, and compressor oil.

— Unit will be equipped with high-pressure switch, low pressure switch and filter drier for Puron refrigerant.

Operating Characteristics

— The capacity of the unit will meet or exceed _____ Btuh at a suction temperature of _____ °F/°C. The power consumption at full load will not exceed _____ kW.

— Combination of the unit and the evaporator or fan coil unit will have a total net cooling capacity of _____ Btuh or greater at conditions of _____ CFM entering air temperature at the evaporator at _____ °F/°C wet bulb and _____ °F/°C dry bulb, and air entering the unit at _____ °F/°C.

— The system will have a SEER of _____ Btuh/watt or greater at DOE conditions.

Electrical Requirements

— Nominal unit electrical characteristics will be _____ v, single phase, 60 hz. The unit will be capable of satisfactory operation within voltage limits of _____ v to _____ v.

— Unit electrical power will be single point connection.

— Control circuit will be 24v.

Special Features

— Refer to section of this literature identifying accessories and descriptions for specific features and available enhancements.

SYSTEM DESIGN SUMMARY

1. Intended for outdoor installation with free air inlet and outlet. Outdoor fan external static pressure available is less than 0.01-IN W.C.
2. Minimum outdoor operating air temperature without low-ambient operation accessory is 55°F (12.8°C).
3. Maximum outdoor operating air temperature is 125°F (51.7°C).
4. For reliable operation, unit should be level in all horizontal planes.
5. For interconnecting refrigerant tube lengths greater than 80 ft (23.4 m) and/or 35 ft (10.7 m) vertical differential, consult Residential Piping and Longline Guideline and Service Manual available from equipment distributor.
6. If any refrigerant tubing is buried, provide a 6 in. (152.4 mm) vertical rise to the valve connections at the unit. Refrigerant tubing lengths up to 36 in. (914.4 mm) may be buried without further consideration. Do not bury refrigerant lines longer than 36 in. (914.4 mm).
7. Use only copper wire for electric connection at unit. Aluminum and clad aluminum are not acceptable for the type of connector provided.
8. Do not apply capillary tube indoor coils to these units.
9. Factory-supplied filter drier must be installed.

Copyright 2018 Carrier Corp. • 7310 W. Morris St. • Indianapolis, IN 46231
Edition Date: 05/18

Catalog No: 24AAA5–03PD

Manufacturer reserves the right to change, at any time, specifications and designs without notice and without obligations.

Replaces: 24AAA5–02PD