24ACB3
Performance™ 13 Series Air Conditioner with Puron® Refrigerant
1–1/2 To 5 Nominal Tons (Size 18 To 60)

Carrier
turn to the experts™

Product Data

Puron™
the environmentally sound refrigerant

Performance™ SERIES

Carrier's Air Conditioners with Puron® refrigerant provide a collection of features unmatched by any other family of equipment. The 24ACB has been designed utilizing Carrier's Puron refrigerant. The environmentally sound refrigerant allows you to make a responsible decision in the protection of the earth's ozone layer.

This product has been designed and manufactured to meet Energy Star® criteria for energy efficiency when matched with appropriate coil components. Refer to the combination ratings in the Product Data for system combinations that meet Energy Star® guidelines.

NOTE: Ratings contained in this document are subject to change at any time. Always refer to the AHRI directory (www.ahridirectory.org) for the most up-to-date ratings information.

INDUSTRY LEADING FEATURES / BENEFITS

EFFICIENCY

- 13 - 15 SEER/11 - 12 EER
- Microtube Technology™ refrigeration system
- Indoor air quality accessories available

SOUND

- Sound level as low as 74 dBA

COMFORT

- System supports Thermidistat™ Control or standard thermostat

RELIABILITY

- Puron® refrigerant - environmentally sound, won't deplete the ozone layer and low lifetime servce cost.
- Front-seating service valves
- Scroll compressor
- Internal pressure-relief valve
- Internal thermal overload
- Low-pressure switch
- High-pressure switch
- Filter drier
- Balanced refrigeration system for maximum reliability

DURABILITY

WeatherArmor™ protection package:

- Solid, durable sheet metal construction
- Steel louver coil guard
- Baked-on, complete outer coverage, powder paint

APPLICATIONS

- Long-line - up to 250 feet (76.20 m) total equivalent length, up to 200 feet (60.96 m) condenser above evaporator, or up to 80 ft. (24.38 m) evaporator above condenser (See Longline Guide for more information.)
- Low ambient (down to -20°F/-28.9°C) with accessory kit

MODEL NUMBER NOMENCLATURE

1	2	3	4	5	6	7	8	9	10	11	12	13
N	N	A	A	A/N	N	N	N	A/N	A/N	A/N	N	N
2	**4**	**A**	**C**	**B**	**3**	**3**	**6**	**A**	**0**	**0**	**3**	1
Product Series		Product Family	Tier	Major Series	SEER	Cooling Capacity		Variations	Open	Open	Voltage	Minor Series
24 = AC		A= RES AC	C=Performance	B = Puron	3=13 SEER			A = Standard	0=Not Defined	0=Not Defined	3=208/230–1	0, 1, 2...

Puron™
the environmentally sound refrigerant

AHRI CERTIFIED™ www.ahridirectory.org

Use of the AHRI Certified TM Mark indicates a manufacturer's participation in the program For verification of certification for individual products, go to www.ahridirectory.org.

Certified System ™

ISO 9001
QMI-SAI Global

c UL US

ENERGY STAR

This product has been designed and manufactured to meet Energy Star® criteria for energy efficiency when matched with appropriate coil components. However, proper refrigerant charge and proper air flow are critical to achieve rated capacity and efficiency. Installation of this product should follow all manufacturing refrigerant charging and air flow instructions. **Failure to confirm proper charge and air flow may reduce energy efficiency and shorten equipment life.**

STANDARD FEATURES

Feature	18	24	30	36	42	48	60
Puron Refrigerant	X	X	X	X	X	X	X
Up to 14.5 SEER / 11.5 EER	X	X	X	X	X	X	
Scroll Compressor	X	X	X	X	X	X	X
Louvered Coil Guard	X	X	X	X	X	X	X
Field–Installed Filter Drier	X	X	X	X	X	X	X
Front–Seating Service Valves	X	X	X	X	X	X	X
Internal Pressure–Relief Valve	X	X	X	X	X	X	X
Internal Thermal Overload	X	X	X	X	X	X	X
Long Line capability	X	X	X	X	X	X	X
Low Ambient capability with Kit	X	X	X	X	X	X	X
Low–Pressure Switch	X	X	X	X	X	X	X
High–Pressure Switch	X	X	X	X	X	X	X
Compressor Sound Blanket	X	X	X	X	X	X	X

X = Standard

REFRIGERANT PIPING LENGTH LIMITATIONS

Liquid Line Sizing and Maximum Total Equivalent Lengths† for Cooling Only Systems with Puron® Refrigerant:

The maximum allowable length of a residential split system depends on the liquid line diameter and vertical separation between indoor and outdoor units.

See Table below for liquid line sizing and maximum lengths :

Maximum Total Equivalent Length
Outdoor Unit BELOW Indoor Unit

Size	Liquid Line Connection	Liquid Line Diam. w/ TXV	AC with Puron Refrigerant Maximum Total Equivalent Length†: Outdoor unit BELOW Indoor Vertical Separation ft (m)								
			0–5 (0–1.5)	6–10 (1.8–3.0)	11–20 (3.4–6.1)	21–30 (6.4–9.1)	31–40 (9.4–12.2)	41–50 (12.5–15.2)	51–60 (15.5–18.3)	61–70 (18.6–21.3)	71–80 (21.6–24.4)
018 AC with Puron	3/8	1/4	150	150	125	100	100	75	––	––	––
		5/16	250*	250*	250*	250*	250*	250*	250*	225*	150
		3/8	250*	250*	250*	250*	250*	250*	250*	250*	250*
024 AC with Puron	3/8	1/4	75	75	75	50	50	––	––	––	––
		5/16	250*	250*	250*	250*	250*	225*	175	125	100
		3/8	250*	250*	250*	250*	250*	250*	250*	250*	250*
030 AC with Puron	3/8	1/4	30	––	––	––	––	––	––	––	––
		5/16	175	225*	200	175	125	100	75	––	––
		3/8	250*	250*	250*	250*	250*	250*	250*	250*	250*
036 AC with Puron	3/8	5/16	175	150	150	100	100	100	75	––	––
		3//8	250*	250*	250*	250*	250*	250*	250*	250*	250*
042 AC with Puron	3/8	5/16	125	100	100	75	75	50	––	––	––
		3/8	250*	250*	250*	250*	250*	250*	250*	250*	150
048 AC with Puron	3/8	3/8	250*	250*	250*	250*	250*	250*	230	160	––
060 AC with Puron	3/8	3/8	250*	250*	250*	225*	190	150	110	––	––

*** Maximum actual length not to exceed 200 ft (61 m)**

† Total equivalent length accounts for losses due to elbows or fitting. See the Long Line Guideline for details.

–– = outside acceptable range

Maximum Total Equivalent Length
Outdoor Unit ABOVE Indoor Unit

Size	Liquid Line Connection	Liquid Line Diam. w/ TXV	AC with Puron Refrigerant Maximum Total Equivalent Length†: Outdoor unit ABOVE Indoor Vertical Separation ft (m)							
			25 (7.6)	26–50 (7.9–15.2)	51–75 (15.5–22.9)	76–100 (23.2–30.5)	101–125 (30.8–38.1)	126–150 (38.4–45.7)	151–175 (46.0–53.3)	176–200 (53.6–61.0)
018 AC with Puron	3/8	1/4	175	250*	250*	250*	250*	250*	250*	250*
		5/16	250*	250*	250*	250*	250*	250*	250*	250*
		3/8	250*	250*	250*	250*	250*	250*	250*	250*
024 AC with Puron	3/8	1/4	100	125	175	200	225*	250*	250*	250*
		5/16	250*	250*	250*	250*	250*	250*	250*	250*
		3/8	250*	250*	250*	250*	250*	250*	250*	250*
030 AC with Puron	3/8	1/4	30	––	––	––	––	––	––	––
		5/16	250*	250*	250*	250*	250*	250*	250*	250*
		3/8	250*	250*	250*	250*	250*	250*	250*	250*
036 AC with Puron	3/8	5/16	225*	250*	250*	250*	250*	250*	250*	250*
		3/8	250*	250*	250*	250*	250*	250*	250*	250*
042 AC with Puron	3/8	5/16	175	200	250*	250*	250*	250*	250*	250*
		3/8	250*	250*	250*	250*	250*	250*	250*	250*
048 AC with Puron	3/8	3/8	250*	250*	250*	250*	250*	250*	250*	250*
060 AC with Puron	3/8	3/8	250*	250*	250*	250*	250*	250*	250*	250*

*** Maximum actual length not to exceed 200 ft (61 m)**

† Total equivalent length accounts for losses due to elbows or fitting. See the Long Line Guideline for details.

–– = outside acceptable range

REFRIGERANT CHARGE ADJUSTMENTS

Liquid Line Size	Puron Charge oz/ft (g/m)
3/8	0.60 (17.74) (Factory charge for lineset = 9 oz / 266.16 g)
5/16	0.40 (11.83)
1/4	0.27 (7.98)

Units are factory charged for 15 ft (4.6 m) of 3/8" liquid line. The factory charge for 3/8" lineset 9 oz. When using other length or diameter liquid lines, charge adjustments are required per the chart above.

Charging Formula:

[(Lineset oz/ft x total length) – (factory charge for lineset)] = charge adjustment

Example 1: System has 15 ft of line set using existing 1/4" liquid line. What charge adjustment is required?

Formula: (.27 oz/ft x 15ft) – (9 oz) = (-4.95) oz.

Net result is to remove 4.95 oz of refrigerant from the system

Example 2: System has 45 ft of existing 5/16" liquid line. What is the charge adjustment?

Formula: (.40 oz/ft. x 45ft) – (9 oz.) = 9 oz.

Net result is to add 9 oz of refrigerant to the system

LONG LINE APPLICATIONS

An application is considered Long Line, when the refrigerant level in the system requires the use of accessories to maintain acceptable refrigerant management for systems reliability. See Accessory Usage Guideline table for required accessories. Defining a system as long line depends on the liquid line diameter, actual length of the tubing, and vertical separation between the indoor and outdoor units.

For Air Conditioner systems, the chart below shows when an application is considered Long Line.

AC WITH PURON® REFRIGERANT LONG LINE DESCRIPTION ft (m)
Beyond these lengths, long line accessories are required

Liquid Line Size	Units On Same Level	Outdoor Below Indoor	Outdoor Above Indoor
1/4	No accessories needed within allowed lengths	No accessories needed within allowed lengths	175 (53.3)
5/16	120 (36.6)	50 (15.2) vertical or 120 (36.6) total	120 (36.6)
3/8	80 (24.4)	35 (10.7) vertical or 80 24.4) total	80 (24.4)

Note: See Long Line Guideline for details

VAPOR LINE SIZING AND COOLING CAPACITY LOSS

Acceptable vapor line diameters provide adequate oil return to the compressor while avoiding excessive capacity loss. The suction line diameters shown in the chart below are acceptable for AC systems with Puron refrigerant:

Vapor Line Sizing and Cooling Capacity Losses — Puron® Refrigerant 1-Stage Air Conditioner Applications

Unit Nominal Size (Btuh)	Maximum Liquid Line Diameters (In. OD)	Vapor Line Diameters (In. OD)	Cooling Capacity Loss (%) Total Equivalent Line Length ft. (m)								
			26–50 (7.9–15.2)	51–80 (15.5–24.4)	81–100 (24.7–30.5)	101–125 (30.8–38.1)	126–150 (38.4–45.7)	151–175 (46.0–53.3)	176–200 (53.6–61.0)	201–225 (61.3–68.6)	226–250 (68.9–76.2)
018 1 Stage AC with Puron	3/8	1/2	1	2	3	5	6	7	8	9	11
		5/8	0	1	1	1	2	2	2	3	3
		3/4	0	0	0	0	1	1	1	1	1
024 1 Stage AC with Puron	3/8	5/8	0	1	2	2	3	3	4	5	5
		3/4	0	0	1	1	1	1	1	2	2
		7/8	0	0	0	0	0	1	1	1	1
030 1 Stage AC with Puron	3/8	5/8	1	2	3	3	4	5	6	7	8
		3/4	0	0	1	1	1	2	2	2	3
		7/8	0	0	0	0	1	1	1	1	1
036 1 Stage AC with Puron	3/8	5/8	1	2	4	5	6	8	9	10	12
		3/4	0	1	1	2	2	3	3	4	4
		7/8	0	0	0	1	1	1	1	2	2
042 1 Stage AC with Puron	3/8	3/4	0	1	2	2	3	4	4	5	6
		7/8	0	0	1	1	1	2	2	2	3
		1 1/8	0	0	0	0	0	0	0	0	0
048 1 Stage AC with Puron	3/8	3/4	0	1	2	3	4	5	5	6	7
		7/8	0	0	1	1	2	2	2	3	3
		1 1/8	0	0	0	0	0	0	0	1	1
060 1 Stage AC with Puron	3/8	3/4	1	2	4	5	6	7	9	10	11
		7/8	0	1	2	2	3	4	4	5	5
		1 1/8	0	0	0	1	1	1	1	1	1

Applications in this area may be long line and may have height restrictions. See the *Residential Piping and Long Line Guideline*.

ACCESSORY THERMOSTATS

PART NUMBER	PROGRAM	GAS	ELECTRIC	HEAT PUMP	HYBRID HEAT	HEAT	COOL
Performance							
TP−PRH01−A	7−Day	√	√	√	√	3	2
TP−PAC01	7−Day	√	√			1	1
TP−NRH01−A	NP	√	√	√	√	3	2
TP−NAC01	NP	√	√			1	1

THERMOSTAT ACCESSORIES		
PART NUMBER	**BRIEF DESCRIPTION**	**THERMOSTATS USED WITH**
SYSTXCCRRS01	Indoor Remote Room Temperature Sensor	All TP− thermostats
TP−EXP01−A	ExP□ Computer Programming Accessory	TP−P thermostats
TSTATXXCNV10‡	Thermostat Conversion Kit (4 to 5 wire) − 10 pack	All Carrier□ branded thermostats
TX−LBP01	Large Decorative Backplate	TP−Pxx, TP−Nxx, TC−Pxx
TSTATXXSEN01−B*	Outdoor Air Temperature Sensor	All TP− thermostats

ACCESSORIES

ORDER NUMBER	DESCRIPTION	18−30	24−30	30−30	36−30	42−30	48−30	60−31
KAACH1201AAA	CRANKCASE HTR					X	X	X
KAACH1401AAA	CRANKCASE HTR	X	X	X	X			
KSACY0101AAA	CYCLE PROTECTOR	X	X	X	X	X	X	X
KAAFT0101AAA	FREEZE THERMOSTAT	X	X	X	X	X	X	X
KSAHS1701AAA	HARD START (CAP / RELAY)	X	X	X	X	X	X	X
KSALA0301410	LOW AMBIENT PSW	X	X	X	X	X	X	X
HC32GE234	MOTOR FAN BALL BEARING 230V	X						
HC34GE239	MOTOR FAN BALL BEARING 230V		X	X				
HC40GE226	MOTOR FAN BALL BEARING 230V				X			
HC38GE228	MOTOR FAN BALL BEARING 230V					X		
HC40GE228	MOTOR FAN BALL BEARING 230V						X	X
KSALA0601AAA	MOTORMASTER 230V	X	X	X	X	X	X	X
KAALS0201LLS	SOLENOID VALVE	X	X	X	X	X	X	X
KAACS0201PTC	START ASSIST PTC	X	X	X	X	X	X	X
KSASF0101AAA	SUPPORT FEET	X	X	X	X	X	X	X
KAATD0101TDR	TIME DELAY RELAY	X	X	X	X	X	X	X
KSATX0201PUR	TXV PURON HSO	X	X	X				
KSATX0301PUR	TXV PURON HSO				X	X		
KSATX0401PUR	TXV PURON HSO						X	
KSATX0501PUR	TXV PURON HSO							X
KAAWS0101AAA	WINTER START	X	X	X	X	X	X	X

x = Accessory

ACCESSORY USAGE GUIDELINE

ACCESSORY	REQUIRED FOR LOW–AMBIENT COOLING APPLICATIONS (Below 55°F/12.8°C)	REQUIRED FOR LONG LINE APPLICATIONS* (Over 80 ft./24.38 m)	REQUIRED FOR SEA COAST APPLICATIONS (Within 2 miles/3.22 km)
Ball Bearing Fan Motor	Yes†	No	No
Compressor Start Assist Capacitor and Relay	Yes	Yes	No
Crankcase Heater	Yes	Yes	No
Evaporator Freeze Thermostat	Yes	No	No
Hard Shut–Off TXV	Yes	Yes	Yes
Liquid Line Solenoid Valve	No	No	No
Motor Master® Control or Low–ambient Pressure Switch	Yes	No	No
Support Feet	Recommended	No	Recommended
Winter Start Control	Yes	No	No

* For tubing line sets between 80 and 200 ft. (24.38 and 60.96 m) and/or 20 ft. (6.09 m) vertical differential, refer to Residential Split–System Longline Application Guideline.

† Required for Low–Ambient Controller (full modulation feature) MotorMaster® Control.

ACCESSORY DESCRIPTION AND USAGE (LISTED ALPHABETICALLY)

1. Ball-Bearing Fan Motor

A fan motor with ball bearings which permits speed reduction while maintaining bearing lubrication.

Usage Guideline:

Required on all units when using MotorMaster®

2. Compressor Start Assist - Capacitor and Relay

Start capacitor and relay gives a ”hard” boost to compressor motor at each start up.

Usage Guideline:

Required for single-phase scroll compressors in the following applications:

Long line

Low-ambient cooling

Suggested for all compressors in areas with a history of low voltage problems.

3. Compressor Start Assist — PTC Type

Solid state electrical device which gives a ”soft” boost to the compressor at each start-up.

Usage Guideline:

Suggested in installations with marginal power supply.

4. Crankcase Heater

An electric resistance heater which mounts to the base of the compressor to keep the lubricant warm during off cycles. Improves compressor lubrication on restart and minimizes the chance of liquid slugging.

Usage Guideline:

Required in Low-ambient cooling applications.

Required in long line applications.

Suggested in all commercial applications.

5. Cycle Protector

The cycle protector is designed to prevent compressor short cycling. This control provides an approximate 5-minute delay after power to the compressor has been interrupted for any reason, including power outage, protector control trip, thermostat jiggling, or normal cycling.

6. Evaporator Freeze Thermostat

An SPST temperature-actuated switch that stops unit operation when evaporator reaches freeze-up conditions.

Usage Guideline:

Required when Low-ambient kit has been added.

7. Low-Ambient Pressure Switch Kit

A long life pressure switch which is mounted to outdoor unit service valve. It is designed to cycle the outdoor fan motor in order to maintain head pressure within normal operating limits. The control will maintain working head pressure at low-ambient temperatures down to 0°F (-17.8°C)when properly installed.

Usage Guideline:

A Low-Ambient Pressure Switch must be used when cooling operation is at outdoor temperatures below 55°F (12.8°C) to a minimum of 0°F (-17.8°C).

Suggested for all commercial applications.

8. MotorMaster® Low-Ambient Controller

A fan-speed control device activated by a temperature sensor, designed to control condenser fan motor speed in response to the saturated, condensing temperature during operation in cooling mode only. For outdoor temperatures down to -20°F (-28.9°C), it maintains condensing temperature at 100°F ±10°F (37.8°C ± 6.5°C).

Usage Guideline:

A MotorMaster® Low Ambient Controller or Low-Ambient Pressure Switch must be used when cooling operation is used at outdoor temperatures below 55°F (12.8°C).

Suggested for all commercial applications.

9. Outdoor Air Temperature Sensor

Designed for use with Carrier Thermostats listed in this publication. This device enables the thermostat to display the outdoor temperature. This device also

is required to enable special thermostat features such as auxiliary heat lock out.

Usage Guideline:

Suggested for all Carrier thermostats listed in this publication.

10. Support Feet

Four stick-on plastic feet that raise the unit 4 in. (101.6 mm) above the mounting pad. This allows sand, dirt, and other debris to be flushed from the unit base, minimizing corrosion.

Usage Guideline:

Suggested in the following applications:

Coastal installations.

Windy areas or where debris is normally circulating.

Rooftop installations.

For improved sound ratings.

11. Thermostatic Expansion Valve (TXV)

A modulating flow-control valve which meters refrigerant liquid flow rate into the evaporator in response to the superheat of the refrigerant gas leaving the evaporator.

Kit includes valve, adapter tubes, and external equalizer tube. Hard shutoff types are available.

NOTE: When using a hard shutoff TXV with single phase reciprocating compressors, a Compressor Start Assist Capacitor and Relay is required.

Usage Guideline:

Accessory required to meet AHRI rating and system reliability, where indoor not equipped.

Hard shutoff TXV or LLS required in air conditioner long line applications.

Required for use on all zoning systems.

12. Time-Delay Relay

An SPST delay relay which briefly continues operation of indoor blower motor to provide additional cooling after the compressor cycles off.

NOTE: Most indoor unit controls include this feature. For those that do not, use the guideline below.

Usage Guideline:

Accessory required to meet AHRI rating, where indoor not equipped.

13. Winter Start Control

This control is designed to alleviate nuisance opening of the low-pressure switch by bypassing it for the first 3 minutes of operation.

PHYSICAL DATA

UNIT SIZE SERIES	18–30	24–30	30–30	36–30	42–30	48–30	60–31
Operating Weight lb (kg)	135 (61.2)	135 (61.2)	149 (67.6)	166 (75.3)	210 (95.3)	236 (107.0)	261 (118.4)
Shipping Weight lb (kg)	156 (70.8)	156 (70.8)	171 (77.6)	189 (85.7)	238 (108.0)	264 (119.7)	295 (133.8)
Compressor Type	Scroll						
REFRIGERANT	Puron® (R–410A)						
Control	TXV (Puron® Hard Shutoff)						
Charge lb (kg)	3.57 (1.62)	3.72 (1.69)	4.50 (2.04)	5.05 (2.29)	5.84 (2.65)	8.00 (3.63)	8.44 (3.83)
COND FAN	Propeller Type, Direct Drive						
Air Discharge	Vertical						
Air Qty (CFM)	1880	2200	2200	2950	3170	3365	4050
Motor HP	1/12	1/10	1/10	1/4	1/5	1/4	1/4
Motor RPM	1100	1100	1100	1100	825	825	825
COND COIL							
Face Area (Sq. ft.)	9.85	9.85	11.49	14.77	17.25	21.56	25.15
Fins per In.	20	20	25	25	25	25	25
Rows	1	1	1	1	1	1	1
Circuits	3	3	3	3	4	5	5
VALVE CONNECT. (In. ID)							
Vapor	5/8	5/8	3/4	3/4	7/8	7/8	7/8
Liquid	3/8						
REFRIGERANT TUBES (In. OD)							
Rated Vapor*	5/8	5/8	3/4	3/4	7/8	7/8	1–1/8
Liquid	3/8						

*Units are rated with 25 ft (7.6 m) of lineset length. See *Vapor Line Sizing and Cooling Capacity Loss* table when using other sizes and lengths of lineset.

Note: See unit Installation Instruction for proper installation.

ELECTRICAL DATA

UNIT SIZE – VOLTAGE, SERIES	V/PH	OPER VOLTS*		COMPR		FAN	MCA	MIN WIRE SIZE†	MIN WIRE SIZE†	MAX LENGTH ft (m)‡	MAX LENGTH ft (m)‡	MAX FUSE** or CKT BRK AMPS
		MAX	MIN.	LRA	RLA	FLA		60° C	75° C	60° C	75° C	
18–30	208–230–1	253	197	48.0	9.0	0.5	11.8	14	14	67 (20.4)	64 (19.5)	15
24–30				58.3	13.5	0.75	17.6	14	14	45 (13.7)	43 (13.1)	25
30–30				64.0	12.8	0.75	16.8	14	14	47 (14.3)	45 (13.7)	25
36–30				77.0	14.1	1.4	19.0	12	12	66 (20.1)	63 (19.2)	30
42–30				112.0	17.9	1.2	23.6	12	12	53 (16.2)	51 (15.5)	40
48–30				109.0	19.9	1.2	26.2	10	10	76 (23.2)	73 (22.3)	40
60–31				134.0	26.4	1.2	34.2	8	8	91 (27.7)	86 (262)	50

* Permissible limits of the voltage range at which the unit will operate satisfactorily

† If wire is applied at ambient greater than 30° C (86° F), consult table 310–16 of the NEC (ANSI/NFPA 70). The ampacity of non–metallic–sheathed cable (NM), trade name ROMEX, shall be that of 60° C (140° F) conditions, per the NEC (ANSI/NFPA 70) Article 336–26. If other than uncoated (no–plated), 60° or 75° C (140° or 167° C) insulation, copper wire (solid wire for 10 AWG or smaller, stranded wire for larger than 10 AWG) is used, consult applicable tables of the NEC (ANSI/NFPA 70).

‡ Length shown is as measured 1 way along wire path between unit and service panel for voltage drop not to exceed 2%.

** Time–Delay fuse.

FLA – Full Load Amps
LRA – Locked Rotor Amps
MCA – Minimum Circuit Amps
RLA – Rated Load Amps

NOTE: Control circuit is 24–V on all units and requires external power source. Copper wire must be used from service disconnect to unit. All motors/compressors contain internal overload protection.

Complies with 2007 requirements of ASHRAE Standards 90.1

A-WEIGHTED SOUND POWER (dBA)

UNIT SIZE – VOLTAGE, SERIES	STANDARD RATING (dBA)	TYPICAL OCTAVE BAND SPECTRUM (dBA, without tone adjustment)						
		125	250	500	1000	2000	4000	8000
18–30	74	50.0	61.5	64.5	66.5	64.0	61.0	54.5
24–30	75	55.5	63.5	67.0	70.0	66.0	63.5	57.0
30–30	74	52.5	63.0	68.5	70.0	66.5	62.5	56.5
36–30	75	57.0	65.0	67.5	69.5	67.5	65.0	60.0
42–30	74	55.0	64.0	68.0	68.5	64.5	60.0	54.0
48–30	74	52.5	62.5	65.5	69.0	63.5	60.5	56.0
60–31	74	54.0	59.0	65.5	67.5	63.5	60.0	55.5

NOTE: Tested in accordance with AHRI Standard 270–2008 (not listed in AHRI).

CHARGING SUBCOOLING (TXV-TYPE EXPANSION DEVICE)

UNIT SIZE–VOLTAGE, SERIES	REQUIRED SUBCOOLING °F (°C)
18–30	8 (4.4)
24–30	13 (7.2)
30–30	16 (8.9)
36–30	16 (8.9)
42–30	10 (5.6)
48–30	17 (9.4)
60–31	11 (6.1)

DIMENSIONS - ENGLISH

UNIT	SERIES	ELECTRICAL CHARACTERISTICS				A	B	C	D	E	F	G	K	L	M	N	P	OPERATING WEIGHT (lbs)	SHIPPING WEIGHT (lbs)	SHIPPING DIMENSIONS (L x W x H)
		208-230-1-60	230-1-60	208/230-3-60	460-3-60															
24ACB318	0	X	O	O	O	25 3/4"	25"	3 3/4"	5/8"	4 7/16"	21 1/4"	9 1/8"	2 13/16"	1/2"	12 1/2"	12 3/8"	12 3/8"	135	156	26 7/8" X 30 1/16" X 32 9/16"
24ACB324	0	X	O	O	O	25 3/4"	25"	3 3/4"	5/8"	4 7/16"	21 1/4"	9 1/8"	2 13/16"	1/2"	13"	11 7/8"	12 3/8"	135	156	26 7/8" X 30 1/16" X 32 9/16"
24ACB330	0	X	O	O	O	25 3/4"	28 7/16"	3 3/4"	3/4"	4 7/16"	21 1/4"	9 1/8"	2 13/16"	1/2"	12 1/4"	13 3/4"	12 3/4"	149	171	26 7/8" X 30 1/16" X 32 9/16"
24ACB336	0	X	O	O	O	25 3/4"	35 1/4"	3 3/4"	3/4"	4 7/16"	21 1/4"	9 1/8"	2 13/16"	1/2"	12"	13"	14 3/4"	166	189	26 7/8" X 30 1/16" X 39 3/8"
24ACB342	0	X	O	O	O	31 3/16"	32 5/16"	3 7/8"	7/8"	6 9/16"	24 11/16"	9 1/8"	2 15/16"	5/8"	15 3/4"	16 1/4"	13 3/4"	210	238	32 3/8" X 35 1/2" X 35 15/16"
24ACB348	0	X	O	O	O	31 3/16"	39 1/8"	3 7/8"	7/8"	6 9/16"	24 11/16"	9 1/8"	2 15/16"	5/8"	14 1/4"	17 1/4"	19 1/4"	236	264	32 3/8" X 35 1/2" X 42 3/4"
24ACB360	1	X	O	O	O	35"	39 1/8"	3 7/8"	7/8"	6 9/16"	28 7/16"	9 1/8"	2 15/16"	5/8"	20 5/8"	19 3/4"	18 3/8"	261	295	36 1/8" X 39 5/16" X 42 3/4"

X = YES
O = NO

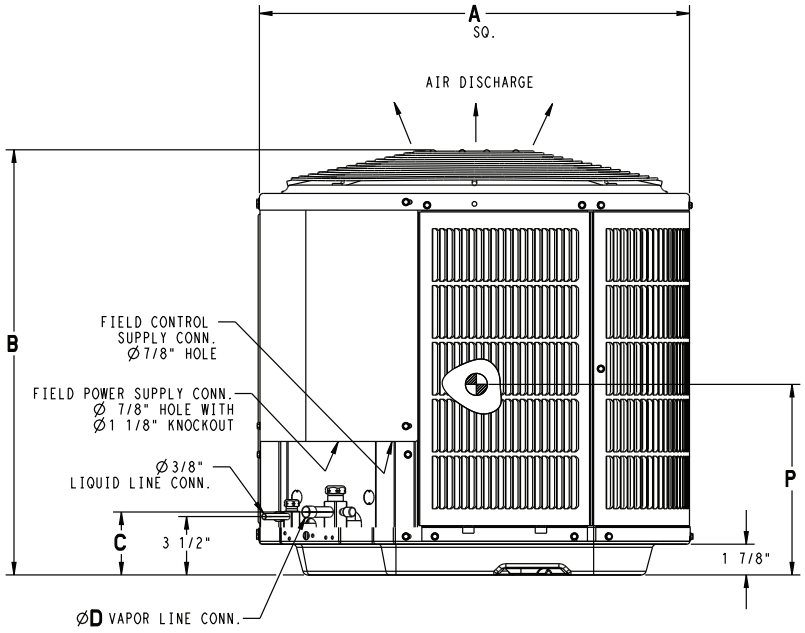

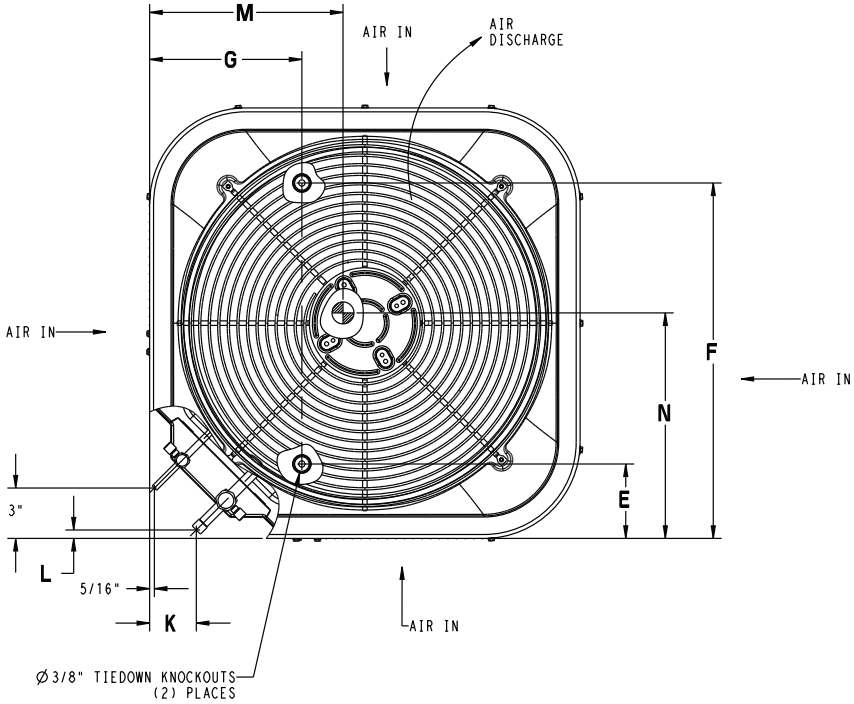

UNIT SIZE	MINIMUM MOUNTING PAD DIMENSIONS
18,24,30,36	26" X 26"
42,48	31 1/2" X 31 1/2"
60	35" X 35"

DIMENSIONS - SI

UNIT	SERIES	ELECTRICAL CHARACTERISTICS				A	B	C	D	E	F	G	K	L	M	N	P	OPERATING WEIGHT (Kgs)	SHIPPING WEIGHT (Kgs)	SHIPPING DIMENSIONS (L x W x H)
24ACB318	0	X	O	O	O	654.0	635.0	95.2	15.9	112.7	539.8	231.8	71.4	12.7	317.5	314.3	314.3	61.2	70.8	682.6 X 763.6 X 827.1
24ACB324	0	X	O	O	O	654.0	635.0	95.2	15.9	112.7	539.8	231.8	71.4	12.7	330.2	301.6	314.3	61.2	70.8	682.6 X 763.6 X 827.1
24ACB330	0	X	O	O	O	654.0	722.3	95.2	19.0	112.7	539.8	231.8	71.4	12.7	311.2	349.2	323.8	67.6	77.6	682.6 X 763.6 X 827.1
24ACB336	0	X	O	O	O	654.0	895.4	95.2	19.0	112.7	539.8	231.8	71.4	12.7	304.8	330.2	374.6	75.3	85.7	682.6 X 763.6 X 1000.1
24ACB342	0	X	O	O	O	792.2	820.8	98.4	22.2	166.7	627.1	231.8	74.6	15.9	400.0	412.8	349.2	95.2	108.0	822.3 X 901.7 X 912.8
24ACB348	0	X	O	O	O	792.2	993.8	98.4	22.2	166.7	627.1	231.8	74.6	15.9	362.0	438.2	489.0	107.0	119.7	822.3 X 901.7 X 1085.8
24ACB360	1	X	O	O	O	889.0	993.8	98.4	22.2	166.7	722.3	231.8	74.6	15.9	523.9	501.6	466.7	118.4	133.8	917.6 X 998.6 X 1085.8
		208-230-1-60	230-1-60	208/230-3-60	460-3-60															

X = YES
O = NO

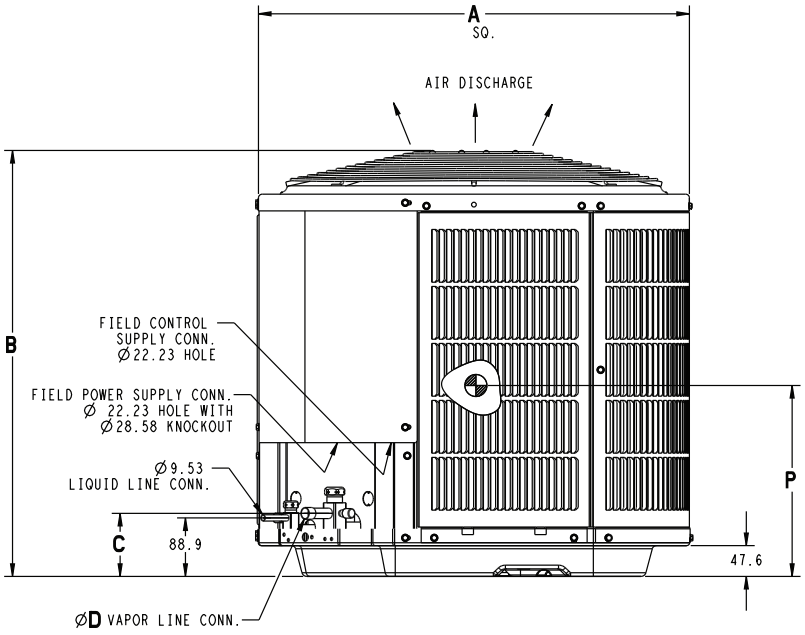

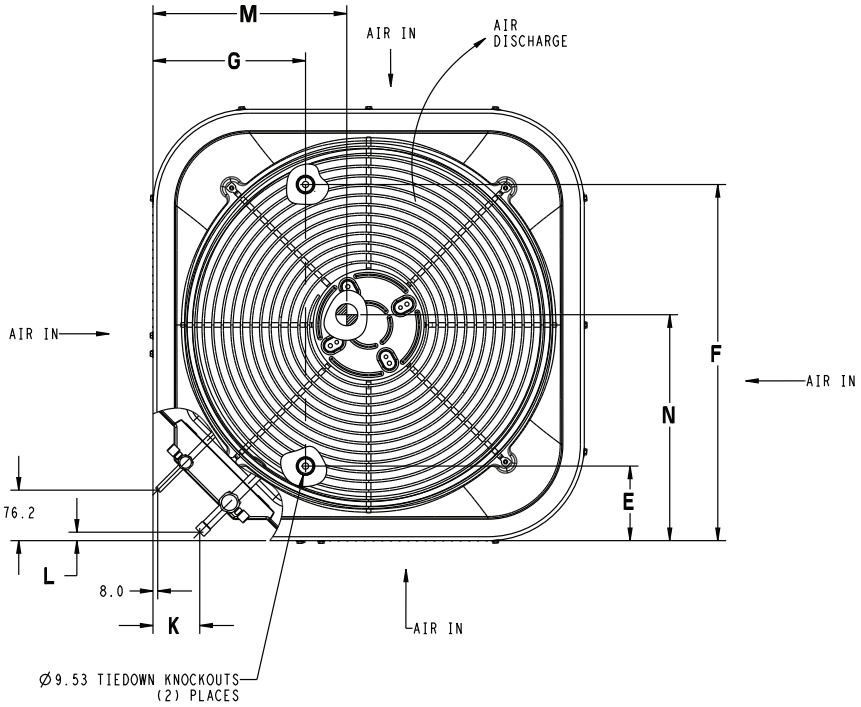

UNIT SIZE	MINIMUM MOUNTING PAD DIMENSIONS
18,24,30,36	660.4 X 660.4
42,48	800.1 X 800.1
60	889.0 X 889.0

CLEARANCES

Clearances (various examples)

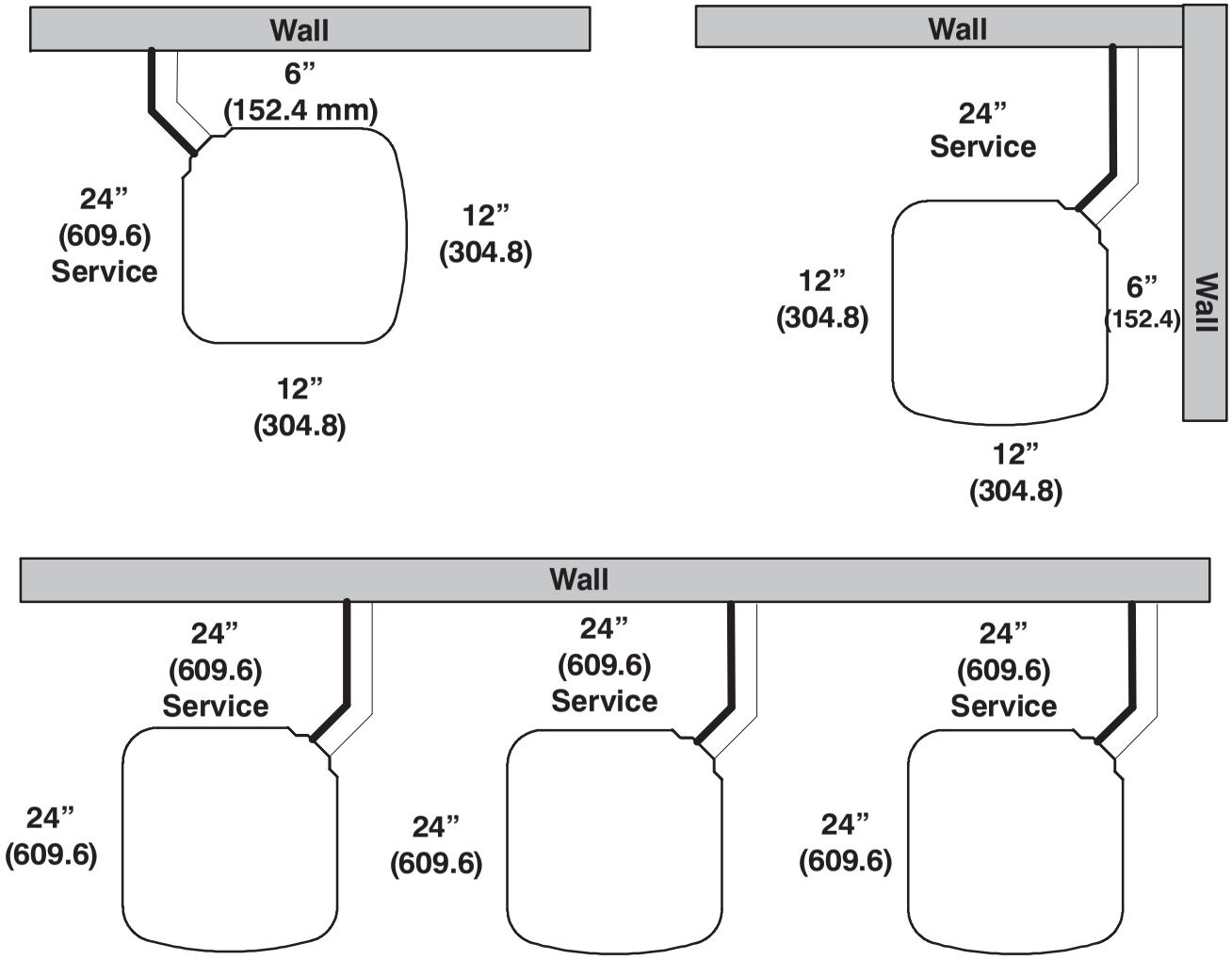

Note: Numbers in ( ) = mm

IMPORTANT: When installing multiple units in an alcove, roof well, or partially enclosed area, ensure there is adequate ventilation to prevent re-circulation of discharge air.

A07833

COMBINATION RATINGS

AHRI Ref. No.	Model Number	Indoor Model	Furnace Model	Capacity	EER	SEER
3045177	24ACB318A30	†CAP**1814A**+TDR		17,500	11.0	13.0
3045184	24ACB318A30	CAP**1814A**	58CV(A,X)070−12	17,200	11.7	14.5
3045178	24ACB318A30	CAP**1814A**	58PH*045−08	17,500	12.2	14.5
4735929	24ACB318A30	CAP**1814A**	59*P5A040E14**10	17,100	12.4	15.2
3045186	24ACB318A30	CAP**2414A**	58CV(A,X)070−12	17,500	11.7	14.5
3045179	24ACB318A30	CAP**2414A**	58PH*045−08	17,800	12.2	14.5
4735930	24ACB318A30	CAP**2414A**	59*P5A040E14**10	17,400	12.7	15.5
3045185	24ACB318A30	CAP**2414A**+TDR		17,700	11.0	13.0
3045189	24ACB318A30	CAP**2417A**	58CV(A,X)090−16	17,600	11.7	14.5
3612971	24ACB318A30	CAP**2417A**	58ME(B,C)040−12	18,000	12.5	15.0
3101467	24ACB318A30	CAP**2417A**	58ME(B,C)060−12	17,900	12.5	15.0
3101466	24ACB318A30	CAP**2417A**	58MEB040−12	18,000	12.5	15.0
3045188	24ACB318A30	CAP**2417A**	58MV(B,C)060−14	17,500	11.7	14.5
3673132	24ACB318A30	CAP**2417A**	58UVB060−14	17,500	11.7	14.5
4130559	24ACB318A30	CAP**2417A**	58VLR105−12	17,700	12.5	15.0
4130558	24ACB318A30	CAP**2417A**	58VMR105−12	17,600	12.2	14.5
4735931	24ACB318A30	CAP**2417A**	59*N*A060V17**14	17,500	13.0	16.0
4735932	24ACB318A30	CAP**2417A**	59*N*A080V17**14	17,400	13.0	16.0
4735933	24ACB318A30	CAP**2417A**	59*P5A040E14**10	17,500	12.7	15.5
4255223	24ACB318A30	CAP**2417A**	OVLAAB036098	17,600	12.2	14.5
4130560	24ACB318A30	CAP**2417A**	OVMAAB036098	17,800	12.2	14.5
3045187	24ACB318A30	CAP**2417A**+TDR		17,700	11.0	13.0
3644870	24ACB318A30	CAP**3619A**+TDR		17,600	11.0	13.0
3045201	24ACB318A30	CNPH*2417A**	58CV(A,X)070−12	17,300	11.7	14.5
3045202	24ACB318A30	CNPH*2417A**	58CV(A,X)090−16	17,400	11.7	14.5
4130580	24ACB318A30	CNPH*2417A**	58HDV040−−12	17,900	12.2	14.5
4130581	24ACB318A30	CNPH*2417A**	58HDV060−−12	17,900	12.2	14.5
3612973	24ACB318A30	CNPH*2417A**	58ME(B,C)040−12	17,900	12.5	15.0
3101471	24ACB318A30	CNPH*2417A**	58ME(B,C)060−12	17,700	12.5	15.0
3101470	24ACB318A30	CNPH*2417A**	58MEB040−12	17,900	12.5	15.0
3045199	24ACB318A30	CNPH*2417A**	58MV(B,C)060−14	17,300	11.7	14.5
3045200	24ACB318A30	CNPH*2417A**	58MV(B,C)080−14	17,400	11.7	14.5
3045182	24ACB318A30	CNPH*2417A**	58PH*045−08	17,800	12.2	14.5
4130571	24ACB318A30	CNPH*2417A**	58VLR105−12	17,700	12.5	15.0
4130570	24ACB318A30	CNPH*2417A**	58VMR105−12	17,400	12.2	14.5
4735942	24ACB318A30	CNPH*2417A**	59*N*A060V17**14	17,500	12.9	16.0
4735943	24ACB318A30	CNPH*2417A**	59*N*A080V17**14	17,400	13.0	16.0
4735944	24ACB318A30	CNPH*2417A**	59*P5A040E14**10	17,400	12.7	15.5
4255226	24ACB318A30	CNPH*2417A**	OVLAAB036098	17,600	12.2	14.5
4130572	24ACB318A30	CNPH*2417A**	OVMAAB036098	17,800	12.2	14.5
3045197	24ACB318A30	CNPH*2417A**+TDR		17,500	11.0	13.0
3045191	24ACB318A30	CNPV*1814A**	58CV(A,X)070−12	17,200	11.7	14.5
3045180	24ACB318A30	CNPV*1814A**	58PH*045−08	17,500	12.2	14.5
4735934	24ACB318A30	CNPV*1814A**	59*P5A040E14**10	17,200	12.5	15.2
3045190	24ACB318A30	CNPV*1814A**+TDR		17,400	11.0	13.0
3690879	24ACB318A30	CNPV*1917A**	58CV(A,X)090−16	17,800	12.0	14.5
3690880	24ACB318A30	CNPV*1917A**	58MEB040−12	17,800	12.0	14.5
3690878	24ACB318A30	CNPV*1917A**	58MV(B,C)060−14	17,800	12.0	14.5
3690891	24ACB318A30	CNPV*1917A**	58UVB060−14	17,800	12.0	14.5
4130563	24ACB318A30	CNPV*1917A**	58VLR105−12	17,900	12.5	15.0
4130562	24ACB318A30	CNPV*1917A**	58VMR105−12	17,600	12.2	15.0
4735935	24ACB318A30	CNPV*1917A**	59*N*A060V17**14	17,600	13.0	16.0
4735936	24ACB318A30	CNPV*1917A**	59*N*A080V17**14	17,600	13.0	16.0
4735937	24ACB318A30	CNPV*1917A**	59*P5A040E14**10	17,600	12.7	15.5
4255224	24ACB318A30	CNPV*1917A**	OVLAAB036098	17,800	12.2	15.0
4130564	24ACB318A30	CNPV*1917A**	OVMAAB036098	17,900	12.2	15.0
3690877	24ACB318A30	CNPV*1917A**+TDR		17,800	11.0	13.0
3045193	24ACB318A30	CNPV*2414A**	58CV(A,X)070−12	17,300	11.7	14.5
3045181	24ACB318A30	CNPV*2414A**	58PH*045−08	17,800	12.2	14.5
4735938	24ACB318A30	CNPV*2414A**	59*P5A040E14**10	17,400	12.7	15.5
3045192	24ACB318A30	CNPV*2414A**+TDR		17,500	11.0	13.0
3045196	24ACB318A30	CNPV*2417A**	58CV(A,X)090−16	17,400	11.7	14.5
4130578	24ACB318A30	CNPV*2417A**	58HDV040−−12	17,900	12.2	14.5
4130579	24ACB318A30	CNPV*2417A**	58HDV060−−12	17,900	12.2	14.5
3612972	24ACB318A30	CNPV*2417A**	58ME(B,C)040−12	17,900	12.5	15.0
3101469	24ACB318A30	CNPV*2417A**	58ME(B,C)060−12	17,700	12.5	15.0
3101468	24ACB318A30	CNPV*2417A**	58MEB040−12	17,900	12.5	15.0
3045195	24ACB318A30	CNPV*2417A**	58MV(B,C)060−14	17,300	11.7	14.5
3756760	24ACB318A30	CNPV*2417A**	58UVB060−14	17,300	11.7	14.5
4130567	24ACB318A30	CNPV*2417A**	58VLR105−12	17,700	12.5	15.0
4130566	24ACB318A30	CNPV*2417A**	58VMR105−12	17,400	12.2	14.5
4735939	24ACB318A30	CNPV*2417A**	59*N*A060V17**14	17,500	12.9	16.0
4735940	24ACB318A30	CNPV*2417A**	59*N*A080V17**14	17,400	13.0	16.0
4735941	24ACB318A30	CNPV*2417A**	59*P5A040E14**10	17,400	12.7	15.5
4255225	24ACB318A30	CNPV*2417A**	OVLAAB036098	17,600	12.2	14.5
4130568	24ACB318A30	CNPV*2417A**	OVMAAB036098	17,800	12.2	14.5
3045194	24ACB318A30	CNPV*2417A**+TDR		17,500	11.0	13.0
3045208	24ACB318A30	CSPH*2412A**	58CV(A,X)070−12	16,600	11.7	14.5
3045209	24ACB318A30	CSPH*2412A**	58CV(A,X)090−16	16,700	11.7	14.5

See notes on page 45

COMBINATION RATINGS CONTINUED

AHRI Ref. No.	Model Number	Indoor Model	Furnace Model	Capacity	EER	SEER
3690881	24ACB318A30	CSPH*2412A**	58HDV040−−12	18,200	12.0	14.5
3690882	24ACB318A30	CSPH*2412A**	58HDV060−−12	18,200	12.0	14.5
3612974	24ACB318A30	CSPH*2412A**	58ME(B,C)040−12	18,000	12.5	15.0
3101473	24ACB318A30	CSPH*2412A**	58ME(B,C)060−12	17,700	12.2	14.5
3101472	24ACB318A30	CSPH*2412A**	58MEB040−12	18,000	12.5	15.0
3045206	24ACB318A30	CSPH*2412A**	58MV(B,C)060−14	16,700	11.7	14.5
3045207	24ACB318A30	CSPH*2412A**	58MV(B,C)080−14	16,700	11.7	14.5
3045183	24ACB318A30	CSPH*2412A**	58PH*045−08	17,800	12.2	14.5
4130575	24ACB318A30	CSPH*2412A**	58VLR105−12	17,900	12.5	15.0
4130574	24ACB318A30	CSPH*2412A**	58VMR105−12	17,600	12.2	14.5
4735945	24ACB318A30	CSPH*2412A**	59*N*A060V17**14	17,700	13.0	16.0
4735946	24ACB318A30	CSPH*2412A**	59*N*A080V17**14	17,600	13.0	16.0
4735947	24ACB318A30	CSPH*2412A**	59*P5A040E14**10	17,400	12.7	15.5
4255227	24ACB318A30	CSPH*2412A**	OVLAAB036098	17,800	12.2	14.5
4130576	24ACB318A30	CSPH*2412A**	OVMAAB036098	17,900	12.2	14.5
3045204	24ACB318A30	CSPH*2412A**+TDR		17,000	11.0	13.0
3819050	24ACB318A30	FB4CNF018		17,400	11.0	13.0
3819051	24ACB318A30	FB4CNF024		17,400	11.0	13.0
3045214	24ACB318A30	FE4ANF002+UI		17,800	12.0	15.0
3045215	24ACB318A30	FF1ENP018		17,400	11.0	13.0
3457516	24ACB318A30	FF1ENP019		17,700	12.2	14.5
3045216	24ACB318A30	FF1ENP024		17,600	11.0	13.2
3457517	24ACB318A30	FF1ENP025		17,900	12.2	14.5
3404512	24ACB318A30	FV4CNF002		17,800	12.0	15.0
3752072	24ACB318A30	FX4DN(B,F)031		17,800	12.0	14.5
3752070	24ACB318A30	FX4DNF019		17,800	12.0	14.5
3752071	24ACB318A30	FX4DNF025		17,800	12.0	14.5
4208610	24ACB318A30	FY5BNF018		17,400	11.0	13.0
4208611	24ACB318A30	FY5BNF024		17,400	11.0	13.0
3045218	24ACB324A30	†CAP**2414A**+TDR		23,000	11.0	13.0
3045219	24ACB324A30	CAP**2414A**	58CV(A,X)070−12	22,600	11.5	14.0
3045275	24ACB324A30	CAP**2414A**	58PH*045−08	22,600	12.0	14.0
4735948	24ACB324A30	CAP**2414A**	59*P5A040E14**10	22,600	11.0	13.3
3045222	24ACB324A30	CAP**2417A**	58CV(A,X)090−16	22,600	11.7	14.5
3612975	24ACB324A30	CAP**2417A**	58ME(B,C)040−12	23,000	12.2	14.5
3101475	24ACB324A30	CAP**2417A**	58ME(B,C)060−12	23,000	12.2	14.5
3101476	24ACB324A30	CAP**2417A**	58ME(B,C)080−12	22,800	12.2	14.5
3101474	24ACB324A30	CAP**2417A**	58MEB040−12	23,000	12.2	14.5
3045221	24ACB324A30	CAP**2417A**	58MV(B,C)060−14	22,600	11.5	14.0
3045274	24ACB324A30	CAP**2417A**	58MV(B,C)080−14	22,400	11.5	14.0
3673133	24ACB324A30	CAP**2417A**	58UVB060−14	22,600	11.5	14.0
3673135	24ACB324A30	CAP**2417A**	58UVB080−14	22,400	11.5	14.0
4130583	24ACB324A30	CAP**2417A**	58VLR105−12	22,800	12.2	14.5
4130582	24ACB324A30	CAP**2417A**	58VMR105−12	22,400	12.0	14.0
4735949	24ACB324A30	CAP**2417A**	59*N*A060V17**14	22,400	11.8	14.2
4735950	24ACB324A30	CAP**2417A**	59*N*A080V17**14	22,400	12.0	14.5
4735951	24ACB324A30	CAP**2417A**	59*P5A040E14**10	22,600	11.0	13.3
4735952	24ACB324A30	CAP**2417A**	59*P5A060E17**14	22,600	12.0	14.5
4255228	24ACB324A30	CAP**2417A**	OVLAAB036098	22,800	12.0	14.0
4130584	24ACB324A30	CAP**2417A**	OVMAAB036098	22,800	12.0	14.0
4130586	24ACB324A30	CAP**2417A**	OVMAAB042112	22,600	12.2	14.5
3045220	24ACB324A30	CAP**2417A**+TDR		22,800	11.0	13.0
3045224	24ACB324A30	CAP**3014A**	58CV(A,X)070−12	22,800	11.5	14.0
3045276	24ACB324A30	CAP**3014A**	58PH*045−08	23,000	12.0	14.0
4735953	24ACB324A30	CAP**3014A**	59*P5A040E14**10	22,800	11.2	13.5
3045223	24ACB324A30	CAP**3014A**+TDR		23,000	11.0	13.0
3045227	24ACB324A30	CAP**3017A**	58CV(A,X)090−16	22,800	11.7	14.5
3612976	24ACB324A30	CAP**3017A**	58ME(B,C)040−12	23,200	12.2	14.5
3101478	24ACB324A30	CAP**3017A**	58ME(B,C)060−12	23,400	12.2	14.5
3101479	24ACB324A30	CAP**3017A**	58ME(B,C)080−12	23,200	12.2	14.5
3101477	24ACB324A30	CAP**3017A**	58MEB040−12	23,200	12.2	14.5
3045226	24ACB324A30	CAP**3017A**	58MV(B,C)060−14	22,800	11.7	14.5
3673134	24ACB324A30	CAP**3017A**	58UVB060−14	22,800	11.7	14.5
4130588	24ACB324A30	CAP**3017A**	58VLR105−12	23,000	12.2	14.5
4130587	24ACB324A30	CAP**3017A**	58VMR105−12	22,600	12.2	14.5
4735954	24ACB324A30	CAP**3017A**	59*N*A060V17**14	22,800	12.0	14.5
4735955	24ACB324A30	CAP**3017A**	59*N*A080V17**14	22,600	12.0	14.5
4735956	24ACB324A30	CAP**3017A**	59*P5A040E14**10	23,000	11.2	13.5
4735957	24ACB324A30	CAP**3017A**	59*P5A060E17**14	22,800	12.0	14.5
4255229	24ACB324A30	CAP**3017A**	OVLAAB036098	23,000	12.2	14.5
4130589	24ACB324A30	CAP**3017A**	OVMAAB036098	23,000	12.0	14.0
4130591	24ACB324A30	CAP**3017A**	OVMAAB042112	22,800	12.2	14.5
3045225	24ACB324A30	CAP**3017A**+TDR		23,000	11.0	13.0
3690875	24ACB324A30	CAP**3619A**	58HDV040−−12	23,200	11.5	14.0
3690876	24ACB324A30	CAP**3619A**	58HDV060−−12	23,200	11.5	14.0
3644871	24ACB324A30	CAP**3619A**+TDR		23,000	11.0	13.0
3045240	24ACB324A30	CNPH*2417A**	58CV(A,X)070−12	22,400	11.5	14.0
4130638	24ACB324A30	CNPH*2417A**	58HDV040−−12	22,600	11.7	13.5

See notes on page 45

COMBINATION RATINGS CONTINUED

AHRI Ref. No.	Model Number	Indoor Model	Furnace Model	Capacity	EER	SEER
4130639	24ACB324A30	CNPH*2417A**	58HDV060−−12	22,800	11.7	13.5
4130640	24ACB324A30	CNPH*2417A**	58HDV080−−20	23,000	11.7	14.0
3612979	24ACB324A30	CNPH*2417A**	58ME(B,C)040−12	22,800	12.0	14.0
3101487	24ACB324A30	CNPH*2417A**	58ME(B,C)060−12	22,800	12.0	14.0
3101488	24ACB324A30	CNPH*2417A**	58ME(B,C)080−12	22,800	12.0	14.0
3101486	24ACB324A30	CNPH*2417A**	58MEB040−12	22,800	12.0	14.0
3801175	24ACB324A30	CNPH*2417A**	58MV(B,C)060−14	22,400	11.5	14.0
3045279	24ACB324A30	CNPH*2417A**	58PH*045−08	22,600	12.0	14.0
4130608	24ACB324A30	CNPH*2417A**	58VLR105−12	22,600	12.0	14.0
4130607	24ACB324A30	CNPH*2417A**	58VMR105−12	22,400	12.0	14.0
4735972	24ACB324A30	CNPH*2417A**	59*N*A060V17**14	22,400	11.8	14.2
4735973	24ACB324A30	CNPH*2417A**	59*N*A080V17**14	22,400	11.8	14.2
4735974	24ACB324A30	CNPH*2417A**	59*N*A100V21**20	22,600	11.8	14.2
4735975	24ACB324A30	CNPH*2417A**	59*N*A120V24**22	22,600	12.0	14.5
4735976	24ACB324A30	CNPH*2417A**	59*P5A040E14**10	22,600	11.0	13.3
4735977	24ACB324A30	CNPH*2417A**	59*P5A060E17**14	22,400	11.8	14.2
4255233	24ACB324A30	CNPH*2417A**	OVLAAB036098	22,600	12.0	14.0
4130609	24ACB324A30	CNPH*2417A**	OVMAAB036098	22,600	11.7	14.0
4130611	24ACB324A30	CNPH*2417A**	OVMAAB042112	22,600	12.0	14.0
3045238	24ACB324A30	CNPH*2417A**+TDR		22,600	11.0	13.0
3045243	24ACB324A30	CNPH*3017A**	58CV(A,X)070−12	22,600	11.7	14.5
4130641	24ACB324A30	CNPH*3017A**	58HDV040−−12	23,000	12.0	14.0
4130642	24ACB324A30	CNPH*3017A**	58HDV060−−12	23,200	12.0	14.0
3612980	24ACB324A30	CNPH*3017A**	58ME(B,C)040−12	23,200	12.2	14.5
3101490	24ACB324A30	CNPH*3017A**	58ME(B,C)060−12	23,400	12.2	14.5
3101491	24ACB324A30	CNPH*3017A**	58ME(B,C)080−12	23,200	12.2	14.5
3101489	24ACB324A30	CNPH*3017A**	58MEB040−12	23,200	12.2	14.5
3045280	24ACB324A30	CNPH*3017A**	58PH*045−08	23,000	12.0	14.0
4130613	24ACB324A30	CNPH*3017A**	58VLR105−12	23,000	12.2	14.5
4130612	24ACB324A30	CNPH*3017A**	58VMR105−12	22,800	12.2	14.5
4735978	24ACB324A30	CNPH*3017A**	59*N*A060V17**14	22,800	12.0	14.5
4735979	24ACB324A30	CNPH*3017A**	59*N*A080V17**14	22,600	12.0	14.5
4735980	24ACB324A30	CNPH*3017A**	59*N*A100V21**20	23,000	12.0	14.5
4735981	24ACB324A30	CNPH*3017A**	59*N*A120V24**22	23,000	12.0	14.5
4735982	24ACB324A30	CNPH*3017A**	59*P5A040E14**10	23,000	11.2	13.5
4735983	24ACB324A30	CNPH*3017A**	59*P5A060E17**14	22,800	12.0	14.5
4255234	24ACB324A30	CNPH*3017A**	OVLAAB036098	23,000	12.2	14.5
4130614	24ACB324A30	CNPH*3017A**	OVMAAB036098	23,000	12.0	14.0
4130616	24ACB324A30	CNPH*3017A**	OVMAAB042112	22,800	12.2	14.5
3045241	24ACB324A30	CNPH*3017A**+TDR		22,800	11.0	13.0
3690855	24ACB324A30	CNPH*3117A**	58CV(A,X)070−12	23,400	12.0	14.5
3690856	24ACB324A30	CNPH*3117A**	58CV(A,X)090−16	23,400	12.0	14.5
3690857	24ACB324A30	CNPH*3117A**	58CV(A,X)110−20	23,400	12.0	14.5
3690858	24ACB324A30	CNPH*3117A**	58CV(A,X)135−22	23,400	12.0	14.5
3690859	24ACB324A30	CNPH*3117A**	58CV(A,X)155−22	23,400	12.0	14.5
3690864	24ACB324A30	CNPH*3117A**	58HDV040−−12	23,400	12.0	14.5
3690865	24ACB324A30	CNPH*3117A**	58HDV060−−12	23,400	12.0	14.5
3690866	24ACB324A30	CNPH*3117A**	58HDV100−−20	23,400	12.0	14.5
3690862	24ACB324A30	CNPH*3117A**	58ME(B,C)060−12	23,400	12.0	14.5
3690863	24ACB324A30	CNPH*3117A**	58ME(B,C)080−12	23,400	12.0	14.5
3690861	24ACB324A30	CNPH*3117A**	58MEB040−12	23,400	12.0	14.5
3690850	24ACB324A30	CNPH*3117A**	58MV(B,C)060−14	23,400	12.0	14.5
3690851	24ACB324A30	CNPH*3117A**	58MV(B,C)080−14	23,400	12.0	14.5
3690852	24ACB324A30	CNPH*3117A**	58MV(B,C)080−20	23,200	12.0	14.5
3690853	24ACB324A30	CNPH*3117A**	58MV(B,C)100−20	23,400	12.0	14.5
3690854	24ACB324A30	CNPH*3117A**	58MV(B,C)120−20	23,400	12.0	14.5
3690849	24ACB324A30	CNPH*3117A**	58MVB040−14	23,400	12.0	14.5
3690860	24ACB324A30	CNPH*3117A**	58PH*045−08	23,400	12.0	14.5
4130618	24ACB324A30	CNPH*3117A**	58VLR105−12	23,400	12.2	14.5
4130617	24ACB324A30	CNPH*3117A**	58VMR105−12	23,000	12.2	14.5
4735984	24ACB324A30	CNPH*3117A**	59*N*A060V17**14	23,200	12.0	14.5
4735985	24ACB324A30	CNPH*3117A**	59*N*A080V17**14	23,000	12.0	14.5
4735986	24ACB324A30	CNPH*3117A**	59*N*A100V21**20	23,400	12.5	15.0
4735987	24ACB324A30	CNPH*3117A**	59*N*A120V24**22	23,200	12.5	15.0
4735988	24ACB324A30	CNPH*3117A**	59*P5A040E14**10	23,400	11.4	13.7
4735989	24ACB324A30	CNPH*3117A**	59*P5A060E17**14	23,200	12.5	15.0
4255235	24ACB324A30	CNPH*3117A**	OVLAAB036098	23,400	12.2	14.5
4130619	24ACB324A30	CNPH*3117A**	OVMAAB036098	23,400	12.2	14.5
4130621	24ACB324A30	CNPH*3117A**	OVMAAB042112	23,200	12.2	14.5
3690848	24ACB324A30	CNPH*3117A**+TDR		23,400	11.0	13.0
3045229	24ACB324A30	CNPV*2414A**	58CV(A,X)070−12	22,400	11.5	14.0
3045277	24ACB324A30	CNPV*2414A**	58PH*045−08	22,600	12.0	14.0
4735958	24ACB324A30	CNPV*2414A**	59*P5A040E14**10	22,600	11.0	13.3
3045228	24ACB324A30	CNPV*2414A**+TDR		22,600	11.0	13.0
3045232	24ACB324A30	CNPV*2417A**	58CV(A,X)090−16	22,400	11.5	14.0
4130632	24ACB324A30	CNPV*2417A**	58HDV040−−12	22,600	11.7	13.5
4130633	24ACB324A30	CNPV*2417A**	58HDV060−−12	22,800	11.7	13.5
3612977	24ACB324A30	CNPV*2417A**	58ME(B,C)040−12	22,800	12.0	14.0
3101481	24ACB324A30	CNPV*2417A**	58ME(B,C)060−12	22,800	12.0	14.0

See notes on page 45

COMBINATION RATINGS CONTINUED

AHRI Ref. No.	Model Number	Indoor Model	Furnace Model	Capacity	EER	SEER
3101482	24ACB324A30	CNPV*2417A**	58ME(B,C)080−12	22,800	12.0	14.0
3101480	24ACB324A30	CNPV*2417A**	58MEB040−12	22,800	12.0	14.0
3045231	24ACB324A30	CNPV*2417A**	58MV(B,C)060−14	22,400	11.5	14.0
3756761	24ACB324A30	CNPV*2417A**	58UVB060−14	22,400	11.5	14.0
4130593	24ACB324A30	CNPV*2417A**	58VLR105−12	22,600	12.0	14.0
4130592	24ACB324A30	CNPV*2417A**	58VMR105−12	22,400	12.0	14.0
4735959	24ACB324A30	CNPV*2417A**	59*N*A060V17**14	22,400	11.8	14.2
4735960	24ACB324A30	CNPV*2417A**	59*N*A080V17**14	22,400	11.8	14.2
4735961	24ACB324A30	CNPV*2417A**	59*P5A040E14**10	22,600	11.0	13.3
4735962	24ACB324A30	CNPV*2417A**	59*P5A060E17**14	22,400	11.8	14.2
4255230	24ACB324A30	CNPV*2417A**	OVLAAB036098	22,600	12.0	14.0
4130594	24ACB324A30	CNPV*2417A**	OVMAAB036098	22,600	11.7	14.0
4130596	24ACB324A30	CNPV*2417A**	OVMAAB042112	22,600	12.0	14.0
3045230	24ACB324A30	CNPV*2417A**+TDR		22,600	11.0	13.0
3045234	24ACB324A30	CNPV*3014A**	58CV(A,X)070−12	22,600	11.2	14.0
3045278	24ACB324A30	CNPV*3014A**	58PH*045−08	22,800	12.0	14.0
4735963	24ACB324A30	CNPV*3014A**	59*P5A040E14**10	22,800	11.2	13.5
3045233	24ACB324A30	CNPV*3014A**+TDR		22,800	11.0	13.0
3045237	24ACB324A30	CNPV*3017A**	58CV(A,X)090−16	22,600	11.7	14.5
4130634	24ACB324A30	CNPV*3017A**	58HDV040−−12	23,000	12.0	14.0
4130635	24ACB324A30	CNPV*3017A**	58HDV060−−12	23,200	12.0	14.0
3612978	24ACB324A30	CNPV*3017A**	58ME(B,C)040−12	23,200	12.2	14.5
3101484	24ACB324A30	CNPV*3017A**	58ME(B,C)060−12	23,400	12.2	14.5
3101485	24ACB324A30	CNPV*3017A**	58ME(B,C)080−12	23,200	12.2	14.5
3101483	24ACB324A30	CNPV*3017A**	58MEB040−12	23,200	12.2	14.5
3045236	24ACB324A30	CNPV*3017A**	58MV(B,C)060−14	22,600	11.7	14.5
3756762	24ACB324A30	CNPV*3017A**	58UVB060−14	22,600	11.7	14.5
4130598	24ACB324A30	CNPV*3017A**	58VLR105−12	23,000	12.2	14.5
4130597	24ACB324A30	CNPV*3017A**	58VMR105−12	22,800	12.2	14.5
4735964	24ACB324A30	CNPV*3017A**	59*N*A060V17**14	22,800	12.0	14.5
4735965	24ACB324A30	CNPV*3017A**	59*N*A080V17**14	22,600	12.0	14.5
4735966	24ACB324A30	CNPV*3017A**	59*P5A040E14**10	23,000	11.2	13.5
4735967	24ACB324A30	CNPV*3017A**	59*P5A060E17**14	22,800	12.0	14.5
4255231	24ACB324A30	CNPV*3017A**	OVLAAB036098	23,000	12.2	14.5
4130599	24ACB324A30	CNPV*3017A**	OVMAAB036098	23,000	12.0	14.0
4130601	24ACB324A30	CNPV*3017A**	OVMAAB042112	22,800	12.2	14.5
3045235	24ACB324A30	CNPV*3017A**+TDR		22,800	11.0	13.0
3690844	24ACB324A30	CNPV*3117A**	58CV(A,X)090−16	23,400	12.0	14.5
4130636	24ACB324A30	CNPV*3117A**	58HDV040−−12	23,400	12.0	14.0
4130637	24ACB324A30	CNPV*3117A**	58HDV060−−12	23,600	12.2	14.5
3690846	24ACB324A30	CNPV*3117A**	58ME(B,C)060−12	23,400	12.0	14.5
3690847	24ACB324A30	CNPV*3117A**	58ME(B,C)080−12	23,400	12.0	14.5
3690845	24ACB324A30	CNPV*3117A**	58MEB040−12	23,400	12.0	14.5
3690843	24ACB324A30	CNPV*3117A**	58MV(B,C)060−14	23,400	12.0	14.5
3690890	24ACB324A30	CNPV*3117A**	58UVB060−14	23,400	12.0	14.5
4130603	24ACB324A30	CNPV*3117A**	58VLR105−12	23,400	12.2	14.5
4130602	24ACB324A30	CNPV*3117A**	58VMR105−12	23,000	12.2	14.5
4735968	24ACB324A30	CNPV*3117A**	59*N*A060V17**14	23,200	12.0	14.5
4735969	24ACB324A30	CNPV*3117A**	59*N*A080V17**14	23,000	12.0	14.5
4735970	24ACB324A30	CNPV*3117A**	59*P5A040E14**10	23,400	11.4	13.7
4735971	24ACB324A30	CNPV*3117A**	59*P5A060E17**14	23,200	12.5	15.0
4255232	24ACB324A30	CNPV*3117A**	OVLAAB036098	23,400	12.2	14.5
4130604	24ACB324A30	CNPV*3117A**	OVMAAB036098	23,400	12.2	14.5
4130606	24ACB324A30	CNPV*3117A**	OVMAAB042112	23,200	12.2	14.5
3690842	24ACB324A30	CNPV*3117A**+TDR		23,400	11.0	13.0
3045248	24ACB324A30	CSPH*2412A**	58CV(A,X)070−12	21,800	11.5	14.0
3045249	24ACB324A30	CSPH*2412A**	58CV(A,X)090−16	21,800	11.7	14.5
3045250	24ACB324A30	CSPH*2412A**	58CV(A,X)110−20	21,800	11.5	14.0
3045251	24ACB324A30	CSPH*2412A**	58CV(A,X)135−22	21,800	11.5	14.0
3690867	24ACB324A30	CSPH*2412A**	58HDV040−−12	23,000	11.5	14.0
3690868	24ACB324A30	CSPH*2412A**	58HDV060−−12	23,000	11.5	14.0
3690869	24ACB324A30	CSPH*2412A**	58HDV080−−20	23,000	11.5	14.0
3690870	24ACB324A30	CSPH*2412A**	58HDV100−−20	23,000	11.5	14.0
3612981	24ACB324A30	CSPH*2412A**	58ME(B,C)040−12	23,000	12.2	14.5
3101493	24ACB324A30	CSPH*2412A**	58ME(B,C)060−12	23,000	12.2	14.5
3101494	24ACB324A30	CSPH*2412A**	58ME(B,C)080−12	22,800	12.2	14.5
3101492	24ACB324A30	CSPH*2412A**	58MEB040−12	23,000	12.2	14.5
3045247	24ACB324A30	CSPH*2412A**	58MV(B,C)060−14	21,800	11.5	14.0
3045281	24ACB324A30	CSPH*2412A**	58PH*045−08	22,800	12.0	14.0
4130623	24ACB324A30	CSPH*2412A**	58VLR105−12	23,000	12.2	14.5
4130622	24ACB324A30	CSPH*2412A**	58VMR105−12	22,600	12.0	14.0
4735990	24ACB324A30	CSPH*2412A**	59*N*A060V17**14	22,800	11.8	14.2
4735991	24ACB324A30	CSPH*2412A**	59*N*A080V17**14	22,600	12.0	14.5
4735992	24ACB324A30	CSPH*2412A**	59*N*A100V21**20	23,000	12.0	14.5
4735993	24ACB324A30	CSPH*2412A**	59*N*A120V24**22	22,800	12.0	14.5
4735994	24ACB324A30	CSPH*2412A**	59*P5A040E14**10	22,800	11.2	13.5
4735995	24ACB324A30	CSPH*2412A**	59*P5A060E17**14	22,600	12.0	14.5
4255236	24ACB324A30	CSPH*2412A**	OVLAAB036098	23,000	12.0	14.0
4130624	24ACB324A30	CSPH*2412A**	OVMAAB036098	23,000	12.0	14.0

See notes on page 45

COMBINATION RATINGS CONTINUED

AHRI Ref. No.	Model Number	Indoor Model	Furnace Model	Capacity	EER	SEER
4130626	24ACB324A30	CSPH*2412A**	OVMAAB042112	22,800	12.0	14.0
3045245	24ACB324A30	CSPH*2412A**+TDR		22,000	11.0	13.0
3045259	24ACB324A30	CSPH*3012A**	58CV(A,X)070−12	21,800	11.7	14.5
3045260	24ACB324A30	CSPH*3012A**	58CV(A,X)090−16	22,000	11.7	14.5
3045261	24ACB324A30	CSPH*3012A**	58CV(A,X)110−20	22,000	11.7	14.5
3045262	24ACB324A30	CSPH*3012A**	58CV(A,X)135−22	22,000	11.7	14.5
3045263	24ACB324A30	CSPH*3012A**	58CV(A,X)155−22	22,000	11.7	14.5
3690871	24ACB324A30	CSPH*3012A**	58HDV040−−12	23,200	11.5	14.0
3690872	24ACB324A30	CSPH*3012A**	58HDV060−−12	23,200	11.5	14.0
3690873	24ACB324A30	CSPH*3012A**	58HDV080−−20	23,200	11.5	14.0
3690874	24ACB324A30	CSPH*3012A**	58HDV100−−20	23,200	11.5	14.0
3612982	24ACB324A30	CSPH*3012A**	58ME(B,C)040−12	23,200	12.2	14.5
3101496	24ACB324A30	CSPH*3012A**	58ME(B,C)060−12	23,200	12.2	14.5
3101497	24ACB324A30	CSPH*3012A**	58ME(B,C)080−12	23,200	12.2	14.5
3101495	24ACB324A30	CSPH*3012A**	58MEB040−12	23,200	12.2	14.5
3045254	24ACB324A30	CSPH*3012A**	58MV(B,C)060−14	21,800	11.7	14.5
3045255	24ACB324A30	CSPH*3012A**	58MV(B,C)080−14	22,000	11.7	14.5
3045256	24ACB324A30	CSPH*3012A**	58MV(B,C)080−20	21,800	11.7	14.5
3045257	24ACB324A30	CSPH*3012A**	58MV(B,C)100−20	22,000	11.7	14.5
3045258	24ACB324A30	CSPH*3012A**	58MV(B,C)120−20	21,800	11.7	14.5
3045282	24ACB324A30	CSPH*3012A**	58PH*045−08	23,000	12.0	14.0
4130628	24ACB324A30	CSPH*3012A**	58VLR105−12	23,000	12.2	14.5
4130627	24ACB324A30	CSPH*3012A**	58VMR105−12	22,800	12.2	14.5
4735996	24ACB324A30	CSPH*3012A**	59*N*A060V17**14	22,800	12.0	14.5
4735997	24ACB324A30	CSPH*3012A**	59*N*A080V17**14	22,800	12.0	14.5
4735998	24ACB324A30	CSPH*3012A**	59*N*A100V21**20	23,000	12.0	14.5
4735999	24ACB324A30	CSPH*3012A**	59*N*A120V24**22	23,000	12.0	14.5
4736000	24ACB324A30	CSPH*3012A**	59*P5A040E14**10	23,000	11.2	13.5
4736001	24ACB324A30	CSPH*3012A**	59*P5A060E17**14	22,800	12.0	14.5
4255237	24ACB324A30	CSPH*3012A**	OVLAAB036098	23,000	12.0	14.0
4130629	24ACB324A30	CSPH*3012A**	OVMAAB036098	23,000	12.0	14.0
4130631	24ACB324A30	CSPH*3012A**	OVMAAB042112	23,000	12.2	14.5
3045252	24ACB324A30	CSPH*3012A**+TDR		22,000	11.0	13.0
3859302	24ACB324A30	FB4CNF024		23,000	11.0	13.0
4208606	24ACB324A30	FB4CNF024+TXV		23,000	11.0	13.5
3859303	24ACB324A30	FB4CNF030		23,000	11.0	13.0
4208607	24ACB324A30	FB4CNF030+TXV		23,000	11.0	13.5
3045269	24ACB324A30	FE4AN(B,F)003+UI		23,000	11.7	14.5
3045268	24ACB324A30	FE4ANF002+UI		23,000	11.7	14.5
3045270	24ACB324A30	FF1ENP024		22,600	11.0	13.0
3457518	24ACB324A30	FF1ENP025		22,800	12.0	14.0
3045271	24ACB324A30	FF1ENP030		22,600	11.0	13.0
3457519	24ACB324A30	FF1ENP031		23,000	11.7	13.5
3404514	24ACB324A30	FV4CN(B,F)003		23,000	12.0	15.0
3404513	24ACB324A30	FV4CNF002		23,000	11.7	14.5
3752074	24ACB324A30	FX4DN(B,F)031		23,200	11.5	14.0
3752075	24ACB324A30	FX4DN(B,F)037		23,400	12.0	14.5
3752073	24ACB324A30	FX4DNF025		23,200	12.0	14.5
3859304	24ACB324A30	FY5BNF024		23,000	11.0	13.0
4208608	24ACB324A30	FY5BNF024+TXV		23,000	11.0	13.5
3859305	24ACB324A30	FY5BNF030		23,000	11.0	13.0
4208609	24ACB324A30	FY5BNF030+TXV		23,000	11.0	13.5
3045283	24ACB330A30	†CAP**3014A**+TDR		28,000	11.0	13.0
3045298	24ACB330A30	CAP**3014A**	58CV(A,X)070−12	27,600	11.2	13.5
3045346	24ACB330A30	CAP**3014A**	58MV(B,C)080−14	27,400	11.2	13.5
3673139	24ACB330A30	CAP**3014A**	58UVB080−14	27,400	11.2	13.5
3045301	24ACB330A30	CAP**3017A**	58CV(A,X)090−16	27,600	11.5	14.0
3612983	24ACB330A30	CAP**3017A**	58ME(B,C)040−12	28,000	12.0	14.0
3101499	24ACB330A30	CAP**3017A**	58ME(B,C)060−12	28,000	12.0	14.0
3101500	24ACB330A30	CAP**3017A**	58ME(B,C)080−12	28,000	12.0	14.0
3101501	24ACB330A30	CAP**3017A**	58ME(B,C)080−16	28,000	12.0	14.0
3101498	24ACB330A30	CAP**3017A**	58MEB040−12	28,000	12.0	14.0
3045300	24ACB330A30	CAP**3017A**	58MV(B,C)060−14	27,600	11.5	14.0
3045284	24ACB330A30	CAP**3017A**	58PH*070−16	27,800	11.7	13.5
3673136	24ACB330A30	CAP**3017A**	58UVB060−14	27,600	11.5	14.0
4130644	24ACB330A30	CAP**3017A**	58VLR105−12	27,800	11.7	14.0
4130643	24ACB330A30	CAP**3017A**	58VMR105−12	27,400	11.7	14.0
4736002	24ACB330A30	CAP**3017A**	59*N*A060V17**14	27,600	11.5	14.0
4736003	24ACB330A30	CAP**3017A**	59*N*A080V17**14	27,800	11.8	14.2
4736004	24ACB330A30	CAP**3017A**	59*P5A060E17**14	27,800	11.5	14.0
4736005	24ACB330A30	CAP**3017A**	59*P5A080E17**16	28,000	11.8	14.2
4255219	24ACB330A30	CAP**3017A**	OVLAAB036098	27,600	11.5	13.5
4130645	24ACB330A30	CAP**3017A**	OVMAAB036098	27,800	11.5	13.5
4130647	24ACB330A30	CAP**3017A**	OVMAAB042112	27,800	12.0	14.0
3045299	24ACB330A30	CAP**3017A**+TDR		28,000	11.0	13.0
3045303	24ACB330A30	CAP**3614A**	58CV(A,X)070−12	27,600	11.5	14.0
3045302	24ACB330A30	CAP**3614A**+TDR		28,000	11.0	13.0
3045306	24ACB330A30	CAP**3617A**	58CV(A,X)090−16	27,800	11.5	14.0

See notes on page 45

COMBINATION RATINGS CONTINUED

AHRI Ref. No.	Model Number	Indoor Model	Furnace Model	Capacity	EER	SEER
3612984	24ACB330A30	CAP**3617A**	58ME(B,C)040−12	28,000	12.2	14.5
3101503	24ACB330A30	CAP**3617A**	58ME(B,C)060−12	28,000	12.0	14.0
3101504	24ACB330A30	CAP**3617A**	58ME(B,C)080−12	28,000	12.2	14.5
3101505	24ACB330A30	CAP**3617A**	58ME(B,C)080−16	28,000	12.0	14.0
3101502	24ACB330A30	CAP**3617A**	58MEB040−12	28,000	12.2	14.5
3045305	24ACB330A30	CAP**3617A**	58MV(B,C)060−14	27,600	11.5	14.0
3045285	24ACB330A30	CAP**3617A**	58PH*070−16	28,000	11.7	14.0
3673137	24ACB330A30	CAP**3617A**	58UVB060−14	27,600	11.5	14.0
4130649	24ACB330A30	CAP**3617A**	58VLR105−12	27,800	11.7	14.0
4130648	24ACB330A30	CAP**3617A**	58VMR105−12	27,600	11.7	14.0
4736006	24ACB330A30	CAP**3617A**	59*N*A060V17**14	27,600	11.5	14.0
4736007	24ACB330A30	CAP**3617A**	59*N*A080V17**14	27,800	11.8	14.2
4736008	24ACB330A30	CAP**3617A**	59*P5A060E17**14	28,000	11.8	14.2
4736009	24ACB330A30	CAP**3617A**	59*P5A080E17**16	28,200	11.8	14.2
4255220	24ACB330A30	CAP**3617A**	OVLAAB036098	27,800	11.7	14.0
4130650	24ACB330A30	CAP**3617A**	OVMAAB036098	27,800	11.5	13.5
4130652	24ACB330A30	CAP**3617A**	OVMAAB042112	28,000	12.0	14.0
3045304	24ACB330A30	CAP**3617A**+TDR		28,000	11.0	13.0
3690793	24ACB330A30	CAP**3619A**	58HDV040−−12	28,000	11.0	13.5
3690794	24ACB330A30	CAP**3619A**	58HDV060−−12	28,000	11.0	13.5
4736015	24ACB330A30	CAP**3619A**	59*N*A060V17**14	27,600	11.5	14.0
4736016	24ACB330A30	CAP**3619A**	59*N*A080V17**14	27,800	11.8	14.2
4736017	24ACB330A30	CAP**3619A**	59*N*A100V21**20	28,000	11.8	14.2
4736018	24ACB330A30	CAP**3619A**	59*P5A060E17**14	28,000	11.8	14.2
4736019	24ACB330A30	CAP**3619A**	59*P5A080E17**16	28,200	11.8	14.2
3644872	24ACB330A30	CAP**3619A**+TDR		28,000	11.0	13.0
3045309	24ACB330A30	CAP**3621A**	58CV(A,X)110−20	27,800	11.5	14.0
3045308	24ACB330A30	CAP**3621A**	58MV(B,C)080−14	27,800	11.5	14.0
3045286	24ACB330A30	CAP**3621A**	58PH*090−16	28,200	12.0	14.0
3673138	24ACB330A30	CAP**3621A**	58UVB080−14	27,800	11.5	14.0
4736010	24ACB330A30	CAP**3621A**	59*N*A060V17**14	27,800	11.8	14.2
4736011	24ACB330A30	CAP**3621A**	59*N*A080V17**14	27,800	11.8	14.2
4736012	24ACB330A30	CAP**3621A**	59*N*A100V21**20	28,000	12.0	14.5
4736013	24ACB330A30	CAP**3621A**	59*P5A060E17**14	28,000	11.8	14.2
4736014	24ACB330A30	CAP**3621A**	59*P5A080E17**16	28,200	11.8	14.2
4130653	24ACB330A30	CAP**3621A**	OVLAAB048112	28,000	12.0	14.0
3045307	24ACB330A30	CAP**3621A**+TDR		28,000	11.0	13.0
3690841	24ACB330A30	CAP**4823A**	58HDV080−−20	28,400	12.0	14.5
3644873	24ACB330A30	CAP**4823A**+TDR		28,000	11.0	13.0
3045323	24ACB330A30	CNPH*3017A**	58CV(A,X)070−12	27,400	11.5	14.0
4130716	24ACB330A30	CNPH*3017A**	58HDV040−−12	27,600	11.5	13.5
4130717	24ACB330A30	CNPH*3017A**	58HDV060−−12	27,800	11.5	13.5
4130718	24ACB330A30	CNPH*3017A**	58HDV080−−20	28,000	11.7	14.0
4130719	24ACB330A30	CNPH*3017A**	58HDV100−−20	28,000	12.0	14.0
3612987	24ACB330A30	CNPH*3017A**	58ME(B,C)040−12	28,000	12.0	14.0
3101515	24ACB330A30	CNPH*3017A**	58ME(B,C)060−12	28,000	12.0	14.0
3101516	24ACB330A30	CNPH*3017A**	58ME(B,C)080−12	28,000	12.0	14.0
3101517	24ACB330A30	CNPH*3017A**	58ME(B,C)080−16	28,000	12.0	14.0
3101514	24ACB330A30	CNPH*3017A**	58MEB040−12	28,000	12.0	14.0
3045347	24ACB330A30	CNPH*3017A**	58MV(B,C)080−14	27,600	11.5	14.0
3045290	24ACB330A30	CNPH*3017A**	58PH*070−16	27,800	11.7	13.5
3045291	24ACB330A30	CNPH*3017A**	58PH*090−16	27,800	12.0	14.0
4130676	24ACB330A30	CNPH*3017A**	58VLR105−12	27,800	11.7	14.0
4130675	24ACB330A30	CNPH*3017A**	58VMR105−12	27,400	11.7	14.0
4736041	24ACB330A30	CNPH*3017A**	59*N*A060V17**14	27,600	11.5	14.0
4736042	24ACB330A30	CNPH*3017A**	59*N*A080V17**14	27,800	11.8	14.2
4736043	24ACB330A30	CNPH*3017A**	59*N*A100V21**20	27,800	11.8	14.2
4736044	24ACB330A30	CNPH*3017A**	59*N*A120V24**22	27,800	11.8	14.2
4736045	24ACB330A30	CNPH*3017A**	59*P5A060E17**14	27,800	11.5	14.0
4736046	24ACB330A30	CNPH*3017A**	59*P5A080E17**16	28,000	11.8	14.2
4255240	24ACB330A30	CNPH*3017A**	OVLAAB036098	27,600	11.5	13.5
4130680	24ACB330A30	CNPH*3017A**	OVLAAB048112	28,000	11.7	14.0
4130677	24ACB330A30	CNPH*3017A**	OVMAAB036098	27,800	11.5	13.5
4130679	24ACB330A30	CNPH*3017A**	OVMAAB042112	27,800	11.7	14.0
3045321	24ACB330A30	CNPH*3017A**+TDR		27,800	11.0	13.0
3690818	24ACB330A30	CNPH*3117A**	58CV(A,X)070−12	28,200	12.0	14.5
3690819	24ACB330A30	CNPH*3117A**	58CV(A,X)090−16	28,200	12.0	14.5
3690820	24ACB330A30	CNPH*3117A**	58CV(A,X)110−20	28,200	12.0	14.5
3690821	24ACB330A30	CNPH*3117A**	58CV(A,X)135−22	28,200	12.0	14.5
3690822	24ACB330A30	CNPH*3117A**	58CV(A,X)155−22	28,200	12.0	14.5
3690829	24ACB330A30	CNPH*3117A**	58HDV040−−12	28,200	11.5	14.0
3690830	24ACB330A30	CNPH*3117A**	58HDV060−−12	28,200	11.5	14.0
3690831	24ACB330A30	CNPH*3117A**	58HDV080−−20	28,200	12.0	14.5
3690832	24ACB330A30	CNPH*3117A**	58HDV100−−20	28,200	12.0	14.5
3690826	24ACB330A30	CNPH*3117A**	58ME(B,C)060−12	28,200	12.0	14.5
3690827	24ACB330A30	CNPH*3117A**	58ME(B,C)080−12	28,200	12.0	14.5
3690828	24ACB330A30	CNPH*3117A**	58ME(B,C)080−16	28,200	12.0	14.5
3690825	24ACB330A30	CNPH*3117A**	58MEB040−12	28,200	12.0	14.5
3690813	24ACB330A30	CNPH*3117A**	58MV(B,C)060−14	28,200	12.0	14.5

See notes on page 45

COMBINATION RATINGS CONTINUED

AHRI Ref. No.	Model Number	Indoor Model	Furnace Model	Capacity	EER	SEER
3690814	24ACB330A30	CNPH*3117A**	58MV(B,C)080−14	28,200	12.0	14.5
3690815	24ACB330A30	CNPH*3117A**	58MV(B,C)080−20	28,200	12.0	14.5
3690816	24ACB330A30	CNPH*3117A**	58MV(B,C)100−20	28,200	12.0	14.5
3690817	24ACB330A30	CNPH*3117A**	58MV(B,C)120−20	28,200	12.0	14.5
3690812	24ACB330A30	CNPH*3117A**	58MVB040−14	28,200	12.0	14.5
3690823	24ACB330A30	CNPH*3117A**	58PH*070−16	28,200	12.0	14.5
3690824	24ACB330A30	CNPH*3117A**	58PH*090−16	28,200	12.0	14.5
4130682	24ACB330A30	CNPH*3117A**	58VLR105−12	28,000	12.2	14.5
4130681	24ACB330A30	CNPH*3117A**	58VMR105−12	28,000	12.2	14.5
4736047	24ACB330A30	CNPH*3117A**	59*N*A060V17**14	28,200	12.0	14.5
4736048	24ACB330A30	CNPH*3117A**	59*N*A080V17**14	28,400	12.0	14.5
4736049	24ACB330A30	CNPH*3117A**	59*N*A100V21**20	28,600	12.0	14.5
4736050	24ACB330A30	CNPH*3117A**	59*N*A120V24**22	28,400	12.0	14.5
4736051	24ACB330A30	CNPH*3117A**	59*P5A060E17**14	28,600	12.0	14.5
4736052	24ACB330A30	CNPH*3117A**	59*P5A080E17**16	28,800	12.0	14.5
4255241	24ACB330A30	CNPH*3117A**	OVLAAB036098	28,000	12.0	14.0
4130686	24ACB330A30	CNPH*3117A**	OVLAAB048112	28,000	12.2	14.5
4130683	24ACB330A30	CNPH*3117A**	OVMAAB036098	28,000	12.0	14.0
4130685	24ACB330A30	CNPH*3117A**	OVMAAB042112	28,000	12.2	14.5
3690811	24ACB330A30	CNPH*3117A**+TDR		28,200	11.0	13.0
3045326	24ACB330A30	CNPH*3617A**	58CV(A,X)070−12	27,400	11.5	14.0
4130720	24ACB330A30	CNPH*3617A**	58HDV040−−12	27,600	11.5	13.5
4130721	24ACB330A30	CNPH*3617A**	58HDV060−−12	27,800	11.5	13.5
4130722	24ACB330A30	CNPH*3617A**	58HDV080−−20	28,000	11.7	14.0
4130723	24ACB330A30	CNPH*3617A**	58HDV100−−20	28,000	12.0	14.0
3612988	24ACB330A30	CNPH*3617A**	58ME(B,C)040−12	28,000	12.0	14.0
3101519	24ACB330A30	CNPH*3617A**	58ME(B,C)060−12	28,000	12.0	14.0
3101520	24ACB330A30	CNPH*3617A**	58ME(B,C)080−12	28,000	12.0	14.0
3101521	24ACB330A30	CNPH*3617A**	58ME(B,C)080−16	28,000	12.0	14.0
3101518	24ACB330A30	CNPH*3617A**	58MEB040−12	28,000	12.0	14.0
3045292	24ACB330A30	CNPH*3617A**	58PH*070−16	27,800	11.7	13.0
3045293	24ACB330A30	CNPH*3617A**	58PH*090−16	27,800	12.0	14.0
4130688	24ACB330A30	CNPH*3617A**	58VLR105−12	27,800	11.7	14.0
4130687	24ACB330A30	CNPH*3617A**	58VMR105−12	27,400	11.7	14.0
4736053	24ACB330A30	CNPH*3617A**	59*N*A060V17**14	27,600	11.5	14.0
4736054	24ACB330A30	CNPH*3617A**	59*N*A080V17**14	27,800	11.8	14.2
4736055	24ACB330A30	CNPH*3617A**	59*N*A100V21**20	27,800	11.8	14.2
4736056	24ACB330A30	CNPH*3617A**	59*N*A120V24**22	27,800	11.8	14.2
4736057	24ACB330A30	CNPH*3617A**	59*P5A060E17**14	27,800	11.5	14.0
4736058	24ACB330A30	CNPH*3617A**	59*P5A080E17**16	28,000	11.8	14.2
4255242	24ACB330A30	CNPH*3617A**	OVLAAB036098	27,600	11.5	13.5
4130692	24ACB330A30	CNPH*3617A**	OVLAAB048112	28,000	11.7	14.0
4130689	24ACB330A30	CNPH*3617A**	OVMAAB036098	27,800	11.5	13.5
4130691	24ACB330A30	CNPH*3617A**	OVMAAB042112	27,800	11.7	14.0
3045324	24ACB330A30	CNPH*3617A**+TDR		27,800	11.0	13.0
3045311	24ACB330A30	CNPV*3014A**	58CV(A,X)070−12	27,400	11.2	13.5
3045310	24ACB330A30	CNPV*3014A**+TDR		27,800	11.0	13.0
3045314	24ACB330A30	CNPV*3017A**	58CV(A,X)090−16	27,400	11.5	14.0
4130705	24ACB330A30	CNPV*3017A**	58HDV040−−12	27,600	11.5	13.5
4130706	24ACB330A30	CNPV*3017A**	58HDV060−−12	27,800	11.5	13.5
3612985	24ACB330A30	CNPV*3017A**	58ME(B,C)040−12	28,000	12.0	14.0
3101507	24ACB330A30	CNPV*3017A**	58ME(B,C)060−12	28,000	12.0	14.0
3101508	24ACB330A30	CNPV*3017A**	58ME(B,C)080−12	28,000	12.0	14.0
3101509	24ACB330A30	CNPV*3017A**	58ME(B,C)080−16	28,000	12.0	14.0
3101506	24ACB330A30	CNPV*3017A**	58MEB040−12	28,000	12.0	14.0
3045313	24ACB330A30	CNPV*3017A**	58MV(B,C)060−14	27,400	11.5	14.0
3045287	24ACB330A30	CNPV*3017A**	58PH*070−16	27,800	11.7	13.5
3756763	24ACB330A30	CNPV*3017A**	58UVB060−14	27,400	11.5	14.0
4130655	24ACB330A30	CNPV*3017A**	58VLR105−12	27,800	11.7	14.0
4130654	24ACB330A30	CNPV*3017A**	58VMR105−12	27,400	11.7	14.0
4736020	24ACB330A30	CNPV*3017A**	59*N*A060V17**14	27,600	11.5	14.0
4736021	24ACB330A30	CNPV*3017A**	59*N*A080V17**14	27,800	11.8	14.2
4736022	24ACB330A30	CNPV*3017A**	59*P5A060E17**14	27,800	11.5	14.0
4736023	24ACB330A30	CNPV*3017A**	59*P5A080E17**16	28,000	11.8	14.2
4255221	24ACB330A30	CNPV*3017A**	OVLAAB036098	27,600	11.5	13.5
4130656	24ACB330A30	CNPV*3017A**	OVMAAB036098	27,800	11.7	13.5
4130658	24ACB330A30	CNPV*3017A**	OVMAAB042112	27,800	11.7	14.0
3045312	24ACB330A30	CNPV*3017A**+TDR		27,800	11.0	13.0
3690797	24ACB330A30	CNPV*3117A**	58CV(A,X)090−16	28,200	12.0	14.5
4130707	24ACB330A30	CNPV*3117A**	58HDV040−−12	28,000	11.7	14.0
4130708	24ACB330A30	CNPV*3117A**	58HDV060−−12	28,000	11.7	14.0
3690800	24ACB330A30	CNPV*3117A**	58ME(B,C)060−12	28,200	12.0	14.5
3690801	24ACB330A30	CNPV*3117A**	58ME(B,C)080−12	28,200	12.0	14.5
3690802	24ACB330A30	CNPV*3117A**	58ME(B,C)080−16	28,200	12.0	14.5
3690799	24ACB330A30	CNPV*3117A**	58MEB040−12	28,200	12.0	14.5
3690796	24ACB330A30	CNPV*3117A**	58MV(B,C)060−14	28,200	12.0	14.5
3690798	24ACB330A30	CNPV*3117A**	58PH*070−16	28,200	12.0	14.5
3690888	24ACB330A30	CNPV*3117A**	58UVB060−14	28,200	12.0	14.5
4130660	24ACB330A30	CNPV*3117A**	58VLR105−12	28,000	12.2	14.5

See notes on page 45

COMBINATION RATINGS CONTINUED

AHRI Ref. No.	Model Number	Indoor Model	Furnace Model	Capacity	EER	SEER
4130659	24ACB330A30	CNPV*3117A**	58VMR105−12	28,000	12.2	14.5
4736024	24ACB330A30	CNPV*3117A**	59*N*A060V17**14	28,200	12.0	14.5
4736025	24ACB330A30	CNPV*3117A**	59*N*A080V17**14	28,400	12.0	14.5
4736026	24ACB330A30	CNPV*3117A**	59*P5A060E17**14	28,600	12.0	14.5
4736027	24ACB330A30	CNPV*3117A**	59*P5A080E17**16	28,800	12.0	14.5
4255222	24ACB330A30	CNPV*3117A**	OVLAAB036098	28,000	12.0	14.0
4130661	24ACB330A30	CNPV*3117A**	OVMAAB036098	28,000	12.0	14.0
4130663	24ACB330A30	CNPV*3117A**	OVMAAB042112	28,000	12.2	14.5
3690795	24ACB330A30	CNPV*3117A**+TDR		28,200	11.0	13.0
3045317	24ACB330A30	CNPV*3617A**	58CV(A,X)090−16	27,400	11.5	14.0
4130709	24ACB330A30	CNPV*3617A**	58HDV040−−12	27,600	11.5	13.5
4130710	24ACB330A30	CNPV*3617A**	58HDV060−−12	27,800	11.5	13.5
3612986	24ACB330A30	CNPV*3617A**	58ME(B,C)040−12	28,000	12.0	14.0
3101511	24ACB330A30	CNPV*3617A**	58ME(B,C)060−12	28,000	12.0	14.0
3101512	24ACB330A30	CNPV*3617A**	58ME(B,C)080−12	28,000	12.0	14.0
3101513	24ACB330A30	CNPV*3617A**	58ME(B,C)080−16	28,000	12.0	14.0
3101510	24ACB330A30	CNPV*3617A**	58MEB040−12	28,000	12.0	14.0
3045316	24ACB330A30	CNPV*3617A**	58MV(B,C)060−14	27,400	11.5	14.0
3045288	24ACB330A30	CNPV*3617A**	58PH*070−16	27,800	11.7	13.5
3756764	24ACB330A30	CNPV*3617A**	58UVB060−14	27,400	11.5	14.0
4130665	24ACB330A30	CNPV*3617A**	58VLR105−12	27,800	11.7	14.0
4130664	24ACB330A30	CNPV*3617A**	58VMR105−12	27,400	11.7	14.0
4736028	24ACB330A30	CNPV*3617A**	59*N*A060V17**14	27,600	11.5	14.0
4736029	24ACB330A30	CNPV*3617A**	59*N*A080V17**14	27,800	11.8	14.2
4736030	24ACB330A30	CNPV*3617A**	59*P5A060E17**14	27,800	11.5	14.0
4736031	24ACB330A30	CNPV*3617A**	59*P5A080E17**16	28,000	11.8	14.2
4255238	24ACB330A30	CNPV*3617A**	OVLAAB036098	27,600	11.7	13.5
4130666	24ACB330A30	CNPV*3617A**	OVMAAB036098	27,800	11.7	13.5
4130668	24ACB330A30	CNPV*3617A**	OVMAAB042112	27,800	11.7	14.0
3045315	24ACB330A30	CNPV*3617A**+TDR		27,800	11.0	13.0
3045320	24ACB330A30	CNPV*3621A**	58CV(A,X)110−20	27,600	11.5	14.0
4130711	24ACB330A30	CNPV*3621A**	58HDV040−−12	27,800	11.5	13.5
4130712	24ACB330A30	CNPV*3621A**	58HDV060−−12	27,800	11.5	13.5
4130713	24ACB330A30	CNPV*3621A**	58HDV080−−20	28,000	11.7	14.0
3045319	24ACB330A30	CNPV*3621A**	58MV(B,C)080−14	27,400	11.5	14.0
3045348	24ACB330A30	CNPV*3621A**	58MV(B,C)080−20	27,600	11.7	14.0
3045289	24ACB330A30	CNPV*3621A**	58PH*090−16	27,800	12.0	14.0
3756765	24ACB330A30	CNPV*3621A**	58UVB080−14	27,400	11.5	14.0
3756766	24ACB330A30	CNPV*3621A**	58UVB080−20	27,600	11.7	14.0
4736032	24ACB330A30	CNPV*3621A**	59*N*A060V17**14	27,600	11.5	14.0
4736033	24ACB330A30	CNPV*3621A**	59*N*A080V17**14	27,800	11.8	14.2
4736034	24ACB330A30	CNPV*3621A**	59*N*A100V21**20	27,800	11.8	14.2
4736035	24ACB330A30	CNPV*3621A**	59*P5A060E17**14	27,800	11.5	14.0
4736036	24ACB330A30	CNPV*3621A**	59*P5A080E17**16	28,000	11.8	14.2
4130669	24ACB330A30	CNPV*3621A**	OVLAAB048112	28,000	11.7	14.0
3045318	24ACB330A30	CNPV*3621A**+TDR		27,800	11.0	13.0
3690805	24ACB330A30	CNPV*3717A**	58CV(A,X)090−16	28,400	12.0	14.5
4130714	24ACB330A30	CNPV*3717A**	58HDV040−−12	28,000	12.0	14.0
4130715	24ACB330A30	CNPV*3717A**	58HDV060−−12	28,000	12.0	14.5
3690808	24ACB330A30	CNPV*3717A**	58ME(B,C)060−12	28,400	12.0	14.5
3690809	24ACB330A30	CNPV*3717A**	58ME(B,C)080−12	28,400	12.0	14.5
3690810	24ACB330A30	CNPV*3717A**	58ME(B,C)080−16	28,400	12.0	14.5
3690807	24ACB330A30	CNPV*3717A**	58MEB040−12	28,400	12.0	14.5
3690804	24ACB330A30	CNPV*3717A**	58MV(B,C)060−14	28,400	12.0	14.5
3690806	24ACB330A30	CNPV*3717A**	58PH*070−16	28,400	12.0	14.5
3690889	24ACB330A30	CNPV*3717A**	58UVB060−14	28,400	12.0	14.5
4130671	24ACB330A30	CNPV*3717A**	58VLR105−12	28,000	12.2	14.5
4130670	24ACB330A30	CNPV*3717A**	58VMR105−12	28,000	12.2	14.5
4736037	24ACB330A30	CNPV*3717A**	59*N*A060V17**14	28,600	12.0	14.5
4736038	24ACB330A30	CNPV*3717A**	59*N*A080V17**14	28,600	12.0	14.5
4736039	24ACB330A30	CNPV*3717A**	59*P5A060E17**14	28,800	12.0	14.5
4736040	24ACB330A30	CNPV*3717A**	59*P5A080E17**16	29,000	12.0	14.5
4255239	24ACB330A30	CNPV*3717A**	OVLAAB036098	28,000	12.2	14.5
4130672	24ACB330A30	CNPV*3717A**	OVMAAB036098	28,000	12.0	14.5
4130674	24ACB330A30	CNPV*3717A**	OVMAAB042112	28,000	12.2	14.5
3690803	24ACB330A30	CNPV*3717A**+TDR		28,400	11.0	13.0
3045330	24ACB330A30	CSPH*3012A**	58CV(A,X)070−12	26,800	11.5	14.0
3690833	24ACB330A30	CSPH*3012A**	58HDV040−−12	28,000	11.0	13.5
3690834	24ACB330A30	CSPH*3012A**	58HDV060−−12	28,000	11.0	13.5
3690835	24ACB330A30	CSPH*3012A**	58HDV080−−20	28,000	11.5	14.0
3690836	24ACB330A30	CSPH*3012A**	58HDV100−−20	28,000	11.5	14.0
3612989	24ACB330A30	CSPH*3012A**	58ME(B,C)040−12	28,000	12.0	14.0
3101523	24ACB330A30	CSPH*3012A**	58ME(B,C)060−12	28,000	12.0	14.0
3101524	24ACB330A30	CSPH*3012A**	58ME(B,C)080−12	28,000	12.0	14.0
3101525	24ACB330A30	CSPH*3012A**	58ME(B,C)080−16	28,000	12.0	14.0
3101522	24ACB330A30	CSPH*3012A**	58MEB040−12	28,000	12.0	14.0
3045294	24ACB330A30	CSPH*3012A**	58PH*070−16	27,800	11.7	13.5
3045295	24ACB330A30	CSPH*3012A**	58PH*090−16	27,800	11.7	14.0
4130694	24ACB330A30	CSPH*3012A**	58VLR105−12	28,000	11.7	14.0

See notes on page 45

COMBINATION RATINGS CONTINUED

AHRI Ref. No.	Model Number	Indoor Model	Furnace Model	Capacity	EER	SEER
4130693	24ACB330A30	CSPH*3012A**	58VMR105−12	27,600	11.7	14.0
4736059	24ACB330A30	CSPH*3012A**	59*N*A060V17**14	27,800	11.5	14.0
4736060	24ACB330A30	CSPH*3012A**	59*N*A080V17**14	27,800	11.8	14.2
4736061	24ACB330A30	CSPH*3012A**	59*N*A100V21**20	28,000	11.8	14.2
4736062	24ACB330A30	CSPH*3012A**	59*N*A120V24**22	28,000	11.8	14.2
4736063	24ACB330A30	CSPH*3012A**	59*P5A060E17**14	27,800	11.5	14.0
4736064	24ACB330A30	CSPH*3012A**	59*P5A080E17**16	28,200	11.8	14.2
4255243	24ACB330A30	CSPH*3012A**	OVLAAB036098	27,800	11.5	13.5
4130698	24ACB330A30	CSPH*3012A**	OVLAAB048112	28,000	11.7	14.0
4130695	24ACB330A30	CSPH*3012A**	OVMAAB036098	27,800	11.5	13.5
4130697	24ACB330A30	CSPH*3012A**	OVMAAB042112	28,000	11.7	14.0
3045328	24ACB330A30	CSPH*3012A**+TDR		27,000	11.0	13.0
3045333	24ACB330A30	CSPH*3612A**	58CV(A,X)070−12	27,200	11.5	14.0
3690837	24ACB330A30	CSPH*3612A**	58HDV040−−12	28,000	11.5	14.0
3690838	24ACB330A30	CSPH*3612A**	58HDV060−−12	28,000	11.5	14.0
3690839	24ACB330A30	CSPH*3612A**	58HDV080−−20	28,000	12.0	14.5
3690840	24ACB330A30	CSPH*3612A**	58HDV100−−20	28,000	12.0	14.5
3612990	24ACB330A30	CSPH*3612A**	58ME(B,C)040−12	28,000	12.2	14.5
3101527	24ACB330A30	CSPH*3612A**	58ME(B,C)060−12	28,000	12.0	14.0
3101528	24ACB330A30	CSPH*3612A**	58ME(B,C)080−12	28,000	12.2	14.5
3101529	24ACB330A30	CSPH*3612A**	58ME(B,C)080−16	28,000	12.0	14.0
3101526	24ACB330A30	CSPH*3612A**	58MEB040−12	28,000	12.2	14.5
3045296	24ACB330A30	CSPH*3612A**	58PH*070−16	28,000	12.0	14.0
3045297	24ACB330A30	CSPH*3612A**	58PH*090−16	28,200	12.0	14.0
4130700	24ACB330A30	CSPH*3612A**	58VLR105−12	28,000	12.2	14.5
4130699	24ACB330A30	CSPH*3612A**	58VMR105−12	28,000	12.0	14.0
4736065	24ACB330A30	CSPH*3612A**	59*N*A060V17**14	28,200	11.8	14.2
4736066	24ACB330A30	CSPH*3612A**	59*N*A080V17**14	28,400	12.0	14.5
4736067	24ACB330A30	CSPH*3612A**	59*N*A100V21**20	28,400	12.0	14.5
4736068	24ACB330A30	CSPH*3612A**	59*N*A120V24**22	28,400	12.0	14.5
4736069	24ACB330A30	CSPH*3612A**	59*P5A060E17**14	28,400	12.0	14.5
4736070	24ACB330A30	CSPH*3612A**	59*P5A080E17**16	28,800	12.0	14.5
4255244	24ACB330A30	CSPH*3612A**	OVLAAB036098	28,000	12.0	14.0
4130704	24ACB330A30	CSPH*3612A**	OVLAAB048112	28,000	12.0	14.0
4130701	24ACB330A30	CSPH*3612A**	OVMAAB036098	28,000	11.7	14.0
4130703	24ACB330A30	CSPH*3612A**	OVMAAB042112	28,000	12.2	14.5
3045331	24ACB330A30	CSPH*3612A**+TDR		27,400	11.0	13.2
3830980	24ACB330A30	FB4CNF030		27,000	11.0	13.0
4208601	24ACB330A30	FB4CNF030+TXV		27,000	11.0	13.5
3830981	24ACB330A30	FB4CNF036		27,000	11.0	13.0
4208602	24ACB330A30	FB4CNF036+TXV		27,000	11.0	13.5
3045339	24ACB330A30	FE4AN(B,F)003+UI		28,000	11.7	14.5
3045340	24ACB330A30	FE4AN(B,F)005+UI		28,800	12.0	15.0
3045338	24ACB330A30	FE4ANF002+UI		27,800	11.5	14.0
3045341	24ACB330A30	FF1ENP030		27,400	11.0	13.0
3457520	24ACB330A30	FF1ENP031		28,000	11.7	14.2
3045342	24ACB330A30	FF1ENP036		28,000	11.0	13.2
3457521	24ACB330A30	FF1ENP037		28,200	11.5	13.5
3404516	24ACB330A30	FV4CN(B,F)003		28,000	11.7	14.5
3404517	24ACB330A30	FV4CN(B,F)005		28,800	12.0	15.0
3404515	24ACB330A30	FV4CNF002		27,800	11.5	14.0
3752076	24ACB330A30	FX4DN(B,F)031		28,200	12.0	14.5
3752077	24ACB330A30	FX4DN(B,F)037		28,600	12.0	14.5
3752078	24ACB330A30	FX4DN(B,F)043		28,600	11.5	14.0
3830982	24ACB330A30	FY5BNF030		27,000	11.0	13.0
4208603	24ACB330A30	FY5BNF030+TXV		27,000	11.0	13.0
4208604	24ACB330A30	FY5BNF036		27,000	11.0	13.0
4208605	24ACB330A30	FY5BNF036+TXV		27,000	11.0	13.0
3046044	24ACB330A50	†CAP**3014A**+TDR		28,000	11.0	13.0
3046059	24ACB330A50	CAP**3014A**	58CV(A,X)070−12	27,600	11.2	13.5
3046107	24ACB330A50	CAP**3014A**	58MV(B,C)080−14	27,400	11.2	13.5
3673143	24ACB330A50	CAP**3014A**	58UVB080−14	27,400	11.2	13.5
3046062	24ACB330A50	CAP**3017A**	58CV(A,X)090−16	27,600	11.5	14.0
3613195	24ACB330A50	CAP**3017A**	58ME(B,C)040−12	28,000	12.0	14.0
3123956	24ACB330A50	CAP**3017A**	58ME(B,C)060−12	28,000	12.0	14.0
3123957	24ACB330A50	CAP**3017A**	58ME(B,C)080−12	28,000	12.0	14.0
3123958	24ACB330A50	CAP**3017A**	58ME(B,C)080−16	28,000	12.0	14.0
3123955	24ACB330A50	CAP**3017A**	58MEB040−12	28,000	12.0	14.0
3046061	24ACB330A50	CAP**3017A**	58MV(B,C)060−14	27,600	11.5	14.0
3046045	24ACB330A50	CAP**3017A**	58PH*070−16	27,800	11.7	13.5
3673140	24ACB330A50	CAP**3017A**	58UVB060−14	27,600	11.5	14.0
3046060	24ACB330A50	CAP**3017A**+TDR		28,000	11.0	13.0
3046064	24ACB330A50	CAP**3614A**	58CV(A,X)070−12	27,600	11.5	14.0
3046063	24ACB330A50	CAP**3614A**+TDR		28,000	11.0	13.0
3046067	24ACB330A50	CAP**3617A**	58CV(A,X)090−16	27,800	11.5	14.0
3613196	24ACB330A50	CAP**3617A**	58ME(B,C)040−12	28,000	12.2	14.5
3123960	24ACB330A50	CAP**3617A**	58ME(B,C)060−12	28,000	12.0	14.0
3123961	24ACB330A50	CAP**3617A**	58ME(B,C)080−12	28,000	12.2	14.5
3123962	24ACB330A50	CAP**3617A**	58ME(B,C)080−16	28,000	12.0	14.0

See notes on page 45

COMBINATION RATINGS CONTINUED

AHRI Ref. No.	Model Number	Indoor Model	Furnace Model	Capacity	EER	SEER
3123959	24ACB330A50	CAP**3617A**	58MEB040−12	28,000	12.2	14.5
3046066	24ACB330A50	CAP**3617A**	58MV(B,C)060−14	27,600	11.5	14.0
3046046	24ACB330A50	CAP**3617A**	58PH*070−16	28,000	11.7	14.0
3673141	24ACB330A50	CAP**3617A**	58UVB060−14	27,600	11.5	14.0
3046065	24ACB330A50	CAP**3617A**+TDR		28,000	11.0	13.0
3046070	24ACB330A50	CAP**3621A**	58CV(A,X)110−20	27,800	11.5	14.0
3046069	24ACB330A50	CAP**3621A**	58MV(B,C)080−14	27,800	11.5	14.0
3046047	24ACB330A50	CAP**3621A**	58PH*090−16	28,200	12.0	14.0
3673142	24ACB330A50	CAP**3621A**	58UVB080−14	27,800	11.5	14.0
3046068	24ACB330A50	CAP**3621A**+TDR		28,000	11.0	13.0
3046084	24ACB330A50	CNPH*3017A**	58CV(A,X)070−12	27,400	11.5	14.0
3613199	24ACB330A50	CNPH*3017A**	58ME(B,C)040−12	28,000	12.0	14.0
3123972	24ACB330A50	CNPH*3017A**	58ME(B,C)060−12	28,000	12.0	14.0
3123973	24ACB330A50	CNPH*3017A**	58ME(B,C)080−12	28,000	12.0	14.0
3123974	24ACB330A50	CNPH*3017A**	58ME(B,C)080−16	28,000	12.0	14.0
3123971	24ACB330A50	CNPH*3017A**	58MEB040−12	28,000	12.0	14.0
3046108	24ACB330A50	CNPH*3017A**	58MV(B,C)080−14	27,600	11.5	14.0
3046051	24ACB330A50	CNPH*3017A**	58PH*070−16	27,800	11.7	13.5
3046052	24ACB330A50	CNPH*3017A**	58PH*090−16	27,800	12.0	14.0
3046082	24ACB330A50	CNPH*3017A**+TDR		27,800	11.0	13.0
3046087	24ACB330A50	CNPH*3617A**	58CV(A,X)070−12	27,400	11.5	14.0
3613200	24ACB330A50	CNPH*3617A**	58ME(B,C)040−12	28,000	12.0	14.0
3123976	24ACB330A50	CNPH*3617A**	58ME(B,C)060−12	28,000	12.0	14.0
3123977	24ACB330A50	CNPH*3617A**	58ME(B,C)080−12	28,000	12.0	14.0
3123978	24ACB330A50	CNPH*3617A**	58ME(B,C)080−16	28,000	12.0	14.0
3123975	24ACB330A50	CNPH*3617A**	58MEB040−12	28,000	12.0	14.0
3046053	24ACB330A50	CNPH*3617A**	58PH*070−16	27,800	11.7	13.0
3046054	24ACB330A50	CNPH*3617A**	58PH*090−16	27,800	12.0	14.0
3046085	24ACB330A50	CNPH*3617A**+TDR		27,800	11.0	13.0
3046072	24ACB330A50	CNPV*3014A**	58CV(A,X)070−12	27,400	11.2	13.5
3046071	24ACB330A50	CNPV*3014A**+TDR		27,800	11.0	13.0
3046075	24ACB330A50	CNPV*3017A**	58CV(A,X)090−16	27,400	11.5	14.0
3613197	24ACB330A50	CNPV*3017A**	58ME(B,C)040−12	28,000	12.0	14.0
3123964	24ACB330A50	CNPV*3017A**	58ME(B,C)060−12	28,000	12.0	14.0
3123965	24ACB330A50	CNPV*3017A**	58ME(B,C)080−12	28,000	12.0	14.0
3123966	24ACB330A50	CNPV*3017A**	58ME(B,C)080−16	28,000	12.0	14.0
3123963	24ACB330A50	CNPV*3017A**	58MEB040−12	28,000	12.0	14.0
3046074	24ACB330A50	CNPV*3017A**	58MV(B,C)060−14	27,400	11.5	14.0
3046048	24ACB330A50	CNPV*3017A**	58PH*070−16	27,800	11.7	13.5
3756777	24ACB330A50	CNPV*3017A**	58UVB060−14	27,400	11.5	14.0
3046073	24ACB330A50	CNPV*3017A**+TDR		27,800	11.0	13.0
3046078	24ACB330A50	CNPV*3617A**	58CV(A,X)090−16	27,400	11.5	14.0
3613198	24ACB330A50	CNPV*3617A**	58ME(B,C)040−12	28,000	12.0	14.0
3123968	24ACB330A50	CNPV*3617A**	58ME(B,C)060−12	28,000	12.0	14.0
3123969	24ACB330A50	CNPV*3617A**	58ME(B,C)080−12	28,000	12.0	14.0
3123970	24ACB330A50	CNPV*3617A**	58ME(B,C)080−16	28,000	12.0	14.0
3123967	24ACB330A50	CNPV*3617A**	58MEB040−12	28,000	12.0	14.0
3046077	24ACB330A50	CNPV*3617A**	58MV(B,C)060−14	27,400	11.5	14.0
3046049	24ACB330A50	CNPV*3617A**	58PH*070−16	27,800	11.7	13.5
3756778	24ACB330A50	CNPV*3617A**	58UVB060−14	27,400	11.5	14.0
3046076	24ACB330A50	CNPV*3617A**+TDR		27,800	11.0	13.0
3046081	24ACB330A50	CNPV*3621A**	58CV(A,X)110−20	27,600	11.5	14.0
3046080	24ACB330A50	CNPV*3621A**	58MV(B,C)080−14	27,400	11.5	14.0
3046109	24ACB330A50	CNPV*3621A**	58MV(B,C)080−20	27,600	11.7	14.0
3046050	24ACB330A50	CNPV*3621A**	58PH*090−16	27,800	12.0	14.0
3756779	24ACB330A50	CNPV*3621A**	58UVB080−14	27,400	11.5	14.0
3756780	24ACB330A50	CNPV*3621A**	58UVB080−20	27,600	11.7	14.0
3046079	24ACB330A50	CNPV*3621A**+TDR		27,800	11.0	13.0
3046091	24ACB330A50	CSPH*3012A**	58CV(A,X)070−12	26,800	11.5	14.0
3613201	24ACB330A50	CSPH*3012A**	58ME(B,C)040−12	28,000	12.0	14.0
3123980	24ACB330A50	CSPH*3012A**	58ME(B,C)060−12	28,000	12.0	14.0
3123981	24ACB330A50	CSPH*3012A**	58ME(B,C)080−12	28,000	12.0	14.0
3123982	24ACB330A50	CSPH*3012A**	58ME(B,C)080−16	28,000	12.0	14.0
3123979	24ACB330A50	CSPH*3012A**	58MEB040−12	28,000	12.0	14.0
3046055	24ACB330A50	CSPH*3012A**	58PH*070−16	27,800	11.7	13.5
3046056	24ACB330A50	CSPH*3012A**	58PH*090−16	27,800	11.7	14.0
3046089	24ACB330A50	CSPH*3012A**+TDR		27,000	11.0	13.0
3046094	24ACB330A50	CSPH*3612A**	58CV(A,X)070−12	27,200	11.5	14.0
3613202	24ACB330A50	CSPH*3612A**	58ME(B,C)040−12	28,000	12.2	14.5
3123984	24ACB330A50	CSPH*3612A**	58ME(B,C)060−12	28,000	12.0	14.0
3123985	24ACB330A50	CSPH*3612A**	58ME(B,C)080−12	28,000	12.2	14.5
3123986	24ACB330A50	CSPH*3612A**	58ME(B,C)080−16	28,000	12.0	14.0
3123983	24ACB330A50	CSPH*3612A**	58MEB040−12	28,000	12.2	14.5
3046057	24ACB330A50	CSPH*3612A**	58PH*070−16	28,000	12.0	14.0
3046058	24ACB330A50	CSPH*3612A**	58PH*090−16	28,200	12.0	14.0
3046092	24ACB330A50	CSPH*3612A**+TDR		27,400	11.0	13.2
3834871	24ACB330A50	FB4CNF030		27,000	11.0	13.0
4208635	24ACB330A50	FB4CNF030+TXV		27,000	11.0	13.5
3834872	24ACB330A50	FB4CNF036		27,000	11.0	13.0

See notes on page 45

COMBINATION RATINGS CONTINUED

AHRI Ref. No.	Model Number	Indoor Model	Furnace Model	Capacity	EER	SEER
4208636	24ACB330A50	FB4CNF036+TXV		27,000	11.0	13.5
3046100	24ACB330A50	FE4AN(B,F)003+UI		28,000	11.7	14.5
3046101	24ACB330A50	FE4AN(B,F)005+UI		28,800	12.0	15.0
3046099	24ACB330A50	FE4ANF002+UI		27,800	11.5	14.0
3046102	24ACB330A50	FF1ENP030		27,400	11.0	13.0
3046103	24ACB330A50	FF1ENP036		28,000	11.0	13.2
3404528	24ACB330A50	FV4CN(B,F)003		28,000	11.7	14.5
3404529	24ACB330A50	FV4CN(B,F)005		28,800	12.0	15.0
3404527	24ACB330A50	FV4CNF002		27,800	11.5	14.0
4208637	24ACB330A50	FY5BNF030		27,000	11.0	13.0
4208638	24ACB330A50	FY5BNF030+TXV		27,000	11.0	13.0
4208639	24ACB330A50	FY5BNF036		27,000	11.0	13.0
4208640	24ACB330A50	FY5BNF036+TXV		27,000	11.0	13.0
3045349	24ACB336A30	†CAP**3617A**+TDR		34,000	11.0	13.0
3045378	24ACB336A30	CAP**3614A**	58CV(A,X)070−12	33,000	11.2	13.5
3045350	24ACB336A30	CAP**3614A**	58PH*045−08	33,600	11.0	13.2
3045377	24ACB336A30	CAP**3614A**+TDR		33,000	11.0	13.0
3045380	24ACB336A30	CAP**3617A**	58CV(A,X)090−16	33,600	11.5	14.0
3612991	24ACB336A30	CAP**3617A**	58ME(B,C)040−12	34,000	12.0	14.0
3101531	24ACB336A30	CAP**3617A**	58ME(B,C)060−12	34,000	12.0	14.0
3101532	24ACB336A30	CAP**3617A**	58ME(B,C)080−12	34,000	12.0	14.0
3101533	24ACB336A30	CAP**3617A**	58ME(B,C)080−16	34,000	12.0	14.0
3101530	24ACB336A30	CAP**3617A**	58MEB040−12	34,000	12.0	14.0
3045379	24ACB336A30	CAP**3617A**	58MV(B,C)060−14	33,600	11.5	14.0
3045351	24ACB336A30	CAP**3617A**	58PH*070−16	33,800	11.7	13.5
3673144	24ACB336A30	CAP**3617A**	58UVB060−14	33,600	11.5	14.0
4130725	24ACB336A30	CAP**3617A**	58VLR105−12	34,000	11.7	14.0
4130724	24ACB336A30	CAP**3617A**	58VMR105−12	33,600	11.7	14.0
4736071	24ACB336A30	CAP**3617A**	59*N*A060V17**14	33,400	11.5	14.0
4736072	24ACB336A30	CAP**3617A**	59*N*A080V17**14	33,600	11.8	14.2
4736073	24ACB336A30	CAP**3617A**	59*P5A060E17**14	33,800	11.5	14.0
4736074	24ACB336A30	CAP**3617A**	59*P5A080E17**16	33,800	11.8	14.2
4255245	24ACB336A30	CAP**3617A**	OVLAAB036098	33,600	11.5	13.5
4130726	24ACB336A30	CAP**3617A**	OVMAAB036098	33,800	11.5	13.5
4130728	24ACB336A30	CAP**3617A**	OVMAAB042112	33,800	11.7	14.0
3690743	24ACB336A30	CAP**3619A**	58HDV040−−12	33,600	11.0	13.0
3690744	24ACB336A30	CAP**3619A**	58HDV060−−12	33,600	11.0	13.5
4736087	24ACB336A30	CAP**3619A**	59*N*A060V17**14	33,400	11.5	14.0
4736088	24ACB336A30	CAP**3619A**	59*N*A080V17**14	33,600	11.8	14.2
4736089	24ACB336A30	CAP**3619A**	59*N*A100V21**20	33,800	11.8	14.2
4736090	24ACB336A30	CAP**3619A**	59*P5A060E17**14	33,800	11.5	14.0
4736091	24ACB336A30	CAP**3619A**	59*P5A080E17**16	33,800	11.8	14.2
3644874	24ACB336A30	CAP**3619A**+TDR		34,000	11.0	13.0
3045383	24ACB336A30	CAP**3621A**	58CV(A,X)110−20	33,800	11.5	14.0
3101534	24ACB336A30	CAP**3621A**	58ME(B,C)100−20	34,000	12.2	14.5
3045382	24ACB336A30	CAP**3621A**	58MV(B,C)080−14	33,600	11.2	13.5
3045352	24ACB336A30	CAP**3621A**	58PH*090−16	34,000	12.0	14.5
3045353	24ACB336A30	CAP**3621A**	58PH*110−20	34,000	12.0	14.5
3673145	24ACB336A30	CAP**3621A**	58UVB080−14	33,600	11.2	13.5
4130730	24ACB336A30	CAP**3621A**	58VLR120−20	34,000	12.2	14.5
4130729	24ACB336A30	CAP**3621A**	58VMR120−20	33,800	12.0	14.0
4736075	24ACB336A30	CAP**3621A**	59*N*A060V17**14	33,400	11.8	14.2
4736076	24ACB336A30	CAP**3621A**	59*N*A080V17**14	33,600	11.8	14.2
4736077	24ACB336A30	CAP**3621A**	59*N*A100V21**20	33,800	12.0	14.5
4736078	24ACB336A30	CAP**3621A**	59*P5A060E17**14	34,000	11.5	14.0
4736079	24ACB336A30	CAP**3621A**	59*P5A080E17**16	34,000	11.8	14.2
4130731	24ACB336A30	CAP**3621A**	OVLAAB048112	34,000	11.7	14.0
3045381	24ACB336A30	CAP**3621A**+TDR		34,000	11.0	13.0
3045386	24ACB336A30	CAP**4221A**	58CV(A,X)110−20	34,000	11.5	14.0
3101535	24ACB336A30	CAP**4221A**	58ME(B,C)100−20	34,000	12.2	14.5
3045385	24ACB336A30	CAP**4221A**	58MV(B,C)080−14	33,800	11.5	14.0
3045354	24ACB336A30	CAP**4221A**	58PH*090−16	34,400	12.2	14.5
3045355	24ACB336A30	CAP**4221A**	58PH*110−20	34,400	12.2	14.5
3673146	24ACB336A30	CAP**4221A**	58UVB080−14	33,800	11.5	14.0
4130733	24ACB336A30	CAP**4221A**	58VLR120−20	34,000	12.2	14.5
4130732	24ACB336A30	CAP**4221A**	58VMR120−20	34,000	12.0	14.5
4736080	24ACB336A30	CAP**4221A**	59*N*A060V17**14	33,600	11.8	14.2
4736081	24ACB336A30	CAP**4221A**	59*N*A080V17**14	33,800	12.0	14.5
4736082	24ACB336A30	CAP**4221A**	59*N*A100V21**20	34,000	12.0	14.5
4736083	24ACB336A30	CAP**4221A**	59*P5A060E17**14	34,200	11.8	14.2
4736084	24ACB336A30	CAP**4221A**	59*P5A080E17**16	34,200	11.8	14.2
4130734	24ACB336A30	CAP**4221A**	OVLAAB048112	34,000	11.7	14.0
3045384	24ACB336A30	CAP**4221A**+TDR		34,000	11.0	13.0
3045389	24ACB336A30	CAP**4224A**	58CV(A,X)135−22	34,000	11.7	14.5
4736085	24ACB336A30	CAP**4224A**	59*N*A100V21**20	34,000	12.0	14.5
4736086	24ACB336A30	CAP**4224A**	59*N*A120V24**22	34,000	12.0	14.5
3045387	24ACB336A30	CAP**4224A**+TDR		34,000	11.0	13.0
3690792	24ACB336A30	CAP**4823A**	58HDV080−−20	34,400	11.5	14.0

See notes on page 45

COMBINATION RATINGS CONTINUED

AHRI Ref. No.	Model Number	Indoor Model	Furnace Model	Capacity	EER	SEER
3644875	24ACB336A30	CAP**4823A**+TDR		34,000	11.0	13.0
3644876	24ACB336A30	CAP**6025A**+TDR		34,000	11.0	13.0
3045401	24ACB336A30	CNPH*3617A**	58CV(A,X)070−12	33,200	11.2	13.5
4130815	24ACB336A30	CNPH*3617A**	58HDV040−−12	33,600	11.0	13.2
4130816	24ACB336A30	CNPH*3617A**	58HDV060−−12	33,800	11.0	13.5
4130817	24ACB336A30	CNPH*3617A**	58HDV080−−20	34,000	11.5	13.5
4130818	24ACB336A30	CNPH*3617A**	58HDV100−−20	34,000	11.7	14.0
3612994	24ACB336A30	CNPH*3617A**	58ME(B,C)040−12	34,000	12.0	14.0
3101547	24ACB336A30	CNPH*3617A**	58ME(B,C)060−12	34,000	12.0	14.0
3101548	24ACB336A30	CNPH*3617A**	58ME(B,C)080−12	33,800	12.0	14.0
3101549	24ACB336A30	CNPH*3617A**	58ME(B,C)080−16	34,000	12.0	14.0
3101550	24ACB336A30	CNPH*3617A**	58ME(B,C)100−20	33,800	12.0	14.0
3101546	24ACB336A30	CNPH*3617A**	58MEB040−12	34,000	12.0	14.0
3045361	24ACB336A30	CNPH*3617A**	58PH*045−08	33,600	11.0	13.2
3045362	24ACB336A30	CNPH*3617A**	58PH*070−16	33,600	11.7	13.5
3045363	24ACB336A30	CNPH*3617A**	58PH*090−16	34,000	12.0	14.0
3045364	24ACB336A30	CNPH*3617A**	58PH*110−20	34,000	12.0	14.0
4130757	24ACB336A30	CNPH*3617A**	58VLR105−12	33,800	11.5	13.5
4130759	24ACB336A30	CNPH*3617A**	58VLR120−20	33,800	12.0	14.0
4130756	24ACB336A30	CNPH*3617A**	58VMR105−12	33,600	11.7	14.0
4130758	24ACB336A30	CNPH*3617A**	58VMR120−20	33,600	11.7	14.0
4736116	24ACB336A30	CNPH*3617A**	59*N*A060V17**14	33,400	11.5	14.0
4736117	24ACB336A30	CNPH*3617A**	59*N*A080V17**14	33,400	11.5	14.0
4736118	24ACB336A30	CNPH*3617A**	59*N*A100V21**20	33,600	11.8	14.2
4736119	24ACB336A30	CNPH*3617A**	59*N*A120V24**22	33,600	11.8	14.2
4736120	24ACB336A30	CNPH*3617A**	59*P5A060E17**14	33,600	11.5	14.0
4736121	24ACB336A30	CNPH*3617A**	59*P5A080E17**16	33,600	11.5	14.0
4255249	24ACB336A30	CNPH*3617A**	OVLAAB036098	33,600	11.5	13.5
4130763	24ACB336A30	CNPH*3617A**	OVLAAB048112	33,800	11.5	13.5
4130764	24ACB336A30	CNPH*3617A**	OVLAAB060154	34,600	11.7	14.0
4130760	24ACB336A30	CNPH*3617A**	OVMAAB036098	33,600	11.5	13.5
4130762	24ACB336A30	CNPH*3617A**	OVMAAB042112	33,800	11.5	13.5
3045399	24ACB336A30	CNPH*3617A**+TDR		33,800	11.0	13.0
3045405	24ACB336A30	CNPH*4221A**	58CV(A,X)070−12	34,200	11.5	14.0
4130819	24ACB336A30	CNPH*4221A**	58HDV040−−12	34,000	11.0	13.5
4130820	24ACB336A30	CNPH*4221A**	58HDV060−−12	34,000	11.5	13.5
4130821	24ACB336A30	CNPH*4221A**	58HDV080−−20	34,000	11.7	14.0
4130822	24ACB336A30	CNPH*4221A**	58HDV100−−20	34,000	12.0	14.0
3612995	24ACB336A30	CNPH*4221A**	58ME(B,C)040−12	34,000	12.0	14.0
3101552	24ACB336A30	CNPH*4221A**	58ME(B,C)060−12	34,000	12.0	14.0
3101553	24ACB336A30	CNPH*4221A**	58ME(B,C)080−12	34,000	12.0	14.0
3101554	24ACB336A30	CNPH*4221A**	58ME(B,C)080−16	34,000	12.0	14.0
3101555	24ACB336A30	CNPH*4221A**	58ME(B,C)100−20	34,000	12.2	14.5
3101551	24ACB336A30	CNPH*4221A**	58MEB040−12	34,000	12.0	14.0
3045404	24ACB336A30	CNPH*4221A**	58MV(B,C)060−14	34,400	11.5	14.0
3045365	24ACB336A30	CNPH*4221A**	58PH*045−08	34,000	11.5	13.5
3045366	24ACB336A30	CNPH*4221A**	58PH*070−16	34,200	11.7	14.0
3045367	24ACB336A30	CNPH*4221A**	58PH*090−16	34,400	12.2	14.5
3045368	24ACB336A30	CNPH*4221A**	58PH*110−20	34,400	12.2	14.5
4130766	24ACB336A30	CNPH*4221A**	58VLR105−12	34,000	12.0	14.0
4130768	24ACB336A30	CNPH*4221A**	58VLR120−20	34,000	12.2	14.5
4130765	24ACB336A30	CNPH*4221A**	58VMR105−12	33,800	12.0	14.0
4130767	24ACB336A30	CNPH*4221A**	58VMR120−20	34,000	12.0	14.0
4736122	24ACB336A30	CNPH*4221A**	59*N*A060V17**14	33,600	11.8	14.2
4736123	24ACB336A30	CNPH*4221A**	59*N*A080V17**14	33,800	11.8	14.2
4736124	24ACB336A30	CNPH*4221A**	59*N*A100V21**20	34,000	12.0	14.5
4736125	24ACB336A30	CNPH*4221A**	59*N*A120V24**22	34,000	12.0	14.5
4736126	24ACB336A30	CNPH*4221A**	59*P5A060E17**14	34,200	11.8	14.2
4736127	24ACB336A30	CNPH*4221A**	59*P5A080E17**16	34,200	11.8	14.2
4255250	24ACB336A30	CNPH*4221A**	OVLAAB036098	34,000	11.5	13.5
4130772	24ACB336A30	CNPH*4221A**	OVLAAB048112	34,000	11.7	14.0
4130773	24ACB336A30	CNPH*4221A**	OVLAAB060154	35,000	12.0	14.0
4130769	24ACB336A30	CNPH*4221A**	OVMAAB036098	34,000	11.5	13.5
4130771	24ACB336A30	CNPH*4221A**	OVMAAB042112	34,000	11.7	14.0
3045402	24ACB336A30	CNPH*4221A**+TDR		34,000	11.0	13.0
3690766	24ACB336A30	CNPH*4321A**	58CV(A,X)070−12	35,000	12.0	14.5
3690767	24ACB336A30	CNPH*4321A**	58CV(A,X)090−16	35,000	12.0	14.5
3690768	24ACB336A30	CNPH*4321A**	58CV(A,X)110−20	35,000	12.0	14.5
3690769	24ACB336A30	CNPH*4321A**	58CV(A,X)135−22	35,000	12.0	14.5
3690770	24ACB336A30	CNPH*4321A**	58CV(A,X)155−22	35,000	12.0	14.5
3690780	24ACB336A30	CNPH*4321A**	58HDV040−−12	35,000	11.0	13.5
3690781	24ACB336A30	CNPH*4321A**	58HDV060−−12	35,000	11.5	14.0
3690782	24ACB336A30	CNPH*4321A**	58HDV080−−20	35,000	12.0	14.5
3690783	24ACB336A30	CNPH*4321A**	58HDV100−−20	35,000	12.0	14.5
3690776	24ACB336A30	CNPH*4321A**	58ME(B,C)060−12	35,000	12.0	14.5
3690777	24ACB336A30	CNPH*4321A**	58ME(B,C)080−12	35,000	12.0	14.5
3690778	24ACB336A30	CNPH*4321A**	58ME(B,C)080−16	35,000	12.0	14.5
3690779	24ACB336A30	CNPH*4321A**	58ME(B,C)100−20	35,000	12.0	14.5
3690775	24ACB336A30	CNPH*4321A**	58MEB040−12	35,000	12.0	14.5

See notes on page 45

COMBINATION RATINGS CONTINUED

AHRI Ref. No.	Model Number	Indoor Model	Furnace Model	Capacity	EER	SEER
3690761	24ACB336A30	CNPH*4321A**	58MV(B,C)060−14	35,000	12.0	14.5
3690762	24ACB336A30	CNPH*4321A**	58MV(B,C)080−14	35,000	12.0	14.5
3690763	24ACB336A30	CNPH*4321A**	58MV(B,C)080−20	35,000	12.0	14.5
3690764	24ACB336A30	CNPH*4321A**	58MV(B,C)100−20	35,000	12.0	14.5
3690765	24ACB336A30	CNPH*4321A**	58MV(B,C)120−20	35,000	12.0	14.5
3690760	24ACB336A30	CNPH*4321A**	58MVB040−14	35,000	12.0	14.5
3690771	24ACB336A30	CNPH*4321A**	58PH*045−08	35,000	11.0	13.5
3690772	24ACB336A30	CNPH*4321A**	58PH*070−16	35,000	11.5	14.0
3690773	24ACB336A30	CNPH*4321A**	58PH*090−16	35,000	12.0	14.5
3690774	24ACB336A30	CNPH*4321A**	58PH*110−20	35,000	12.0	14.5
4130775	24ACB336A30	CNPH*4321A**	58VLR105−12	34,400	12.2	14.5
4130777	24ACB336A30	CNPH*4321A**	58VLR120−20	34,400	12.2	14.5
4130774	24ACB336A30	CNPH*4321A**	58VMR105−12	34,400	12.2	14.5
4130776	24ACB336A30	CNPH*4321A**	58VMR120−20	34,400	12.2	14.5
4736128	24ACB336A30	CNPH*4321A**	59*N*A060V17**14	34,600	12.0	14.5
4736129	24ACB336A30	CNPH*4321A**	59*N*A080V17**14	34,800	12.0	14.5
4736130	24ACB336A30	CNPH*4321A**	59*N*A100V21**20	35,000	12.5	15.0
4736131	24ACB336A30	CNPH*4321A**	59*N*A120V24**22	35,000	12.5	15.2
4736132	24ACB336A30	CNPH*4321A**	59*P5A060E17**14	35,200	12.0	14.5
4736133	24ACB336A30	CNPH*4321A**	59*P5A080E17**16	35,200	12.0	14.5
4255251	24ACB336A30	CNPH*4321A**	OVLAAB036098	34,400	12.0	14.0
4130781	24ACB336A30	CNPH*4321A**	OVLAAB048112	34,400	12.2	14.5
4130782	24ACB336A30	CNPH*4321A**	OVLAAB060154	34,400	12.2	14.5
4130778	24ACB336A30	CNPH*4321A**	OVMAAB036098	34,400	12.0	14.0
4130780	24ACB336A30	CNPH*4321A**	OVMAAB042112	34,400	12.2	14.5
3690759	24ACB336A30	CNPH*4321A**+TDR		35,000	11.0	13.0
3045392	24ACB336A30	CNPV*3617A**	58CV(A,X)090−16	33,400	11.5	14.0
4130801	24ACB336A30	CNPV*3617A**	58HDV040−−12	33,600	11.0	13.2
4130802	24ACB336A30	CNPV*3617A**	58HDV060−−12	33,800	11.0	13.5
3612992	24ACB336A30	CNPV*3617A**	58ME(B,C)040−12	34,000	12.0	14.0
3101537	24ACB336A30	CNPV*3617A**	58ME(B,C)060−12	34,000	12.0	14.0
3101538	24ACB336A30	CNPV*3617A**	58ME(B,C)080−12	33,800	12.0	14.0
3101539	24ACB336A30	CNPV*3617A**	58ME(B,C)080−16	34,000	12.0	14.0
3101536	24ACB336A30	CNPV*3617A**	58MEB040−12	34,000	12.0	14.0
3045391	24ACB336A30	CNPV*3617A**	58MV(B,C)060−14	33,200	11.2	13.5
3045356	24ACB336A30	CNPV*3617A**	58PH*070−16	33,600	11.7	13.5
3756767	24ACB336A30	CNPV*3617A**	58UVB060−14	33,200	11.2	13.5
4130736	24ACB336A30	CNPV*3617A**	58VLR105−12	33,800	11.5	13.5
4130735	24ACB336A30	CNPV*3617A**	58VMR105−12	33,600	11.7	14.0
4736092	24ACB336A30	CNPV*3617A**	59*N*A060V17**14	33,400	11.5	14.0
4736093	24ACB336A30	CNPV*3617A**	59*N*A080V17**14	33,400	11.5	14.0
4736094	24ACB336A30	CNPV*3617A**	59*P5A060E17**14	33,600	11.5	14.0
4736095	24ACB336A30	CNPV*3617A**	59*P5A080E17**16	33,600	11.5	14.0
4255246	24ACB336A30	CNPV*3617A**	OVLAAB036098	33,600	11.5	13.5
4130737	24ACB336A30	CNPV*3617A**	OVMAAB036098	33,600	11.5	13.5
4130739	24ACB336A30	CNPV*3617A**	OVMAAB042112	33,800	11.7	14.0
3045390	24ACB336A30	CNPV*3617A**+TDR		33,800	11.0	13.0
3045395	24ACB336A30	CNPV*3621A**	58CV(A,X)110−20	33,800	11.2	13.5
4130803	24ACB336A30	CNPV*3621A**	58HDV040−−12	33,600	11.0	13.2
4130804	24ACB336A30	CNPV*3621A**	58HDV060−−12	33,800	11.5	13.5
4130805	24ACB336A30	CNPV*3621A**	58HDV080−−20	34,000	11.5	13.5
3101540	24ACB336A30	CNPV*3621A**	58ME(B,C)100−20	33,800	12.2	14.5
3045394	24ACB336A30	CNPV*3621A**	58MV(B,C)080−14	33,600	11.0	13.0
3045357	24ACB336A30	CNPV*3621A**	58PH*090−16	34,000	12.0	14.0
3045358	24ACB336A30	CNPV*3621A**	58PH*110−20	34,000	12.0	14.0
3756768	24ACB336A30	CNPV*3621A**	58UVB080−14	33,600	11.0	13.0
4130741	24ACB336A30	CNPV*3621A**	58VLR120−20	33,800	12.0	14.0
4130740	24ACB336A30	CNPV*3621A**	58VMR120−20	33,600	11.7	14.0
4736096	24ACB336A30	CNPV*3621A**	59*N*A060V17**14	33,400	11.5	14.0
4736097	24ACB336A30	CNPV*3621A**	59*N*A080V17**14	33,400	11.8	14.2
4736098	24ACB336A30	CNPV*3621A**	59*N*A100V21**20	33,600	11.8	14.2
4736099	24ACB336A30	CNPV*3621A**	59*P5A060E17**14	33,600	11.5	14.0
4736100	24ACB336A30	CNPV*3621A**	59*P5A080E17**16	33,800	11.5	14.0
4130742	24ACB336A30	CNPV*3621A**	OVLAAB048112	33,800	11.5	13.5
3045393	24ACB336A30	CNPV*3621A**+TDR		33,800	11.0	13.0
3690747	24ACB336A30	CNPV*3717A**	58CV(A,X)090−16	35,000	12.0	14.5
4130806	24ACB336A30	CNPV*3717A**	58HDV040−−12	34,200	11.5	13.5
4130807	24ACB336A30	CNPV*3717A**	58HDV060−−12	34,200	12.0	14.0
3690750	24ACB336A30	CNPV*3717A**	58ME(B,C)060−12	35,000	12.0	14.5
3690751	24ACB336A30	CNPV*3717A**	58ME(B,C)080−12	35,000	12.0	14.5
3690752	24ACB336A30	CNPV*3717A**	58ME(B,C)080−16	35,000	12.0	14.5
3690749	24ACB336A30	CNPV*3717A**	58MEB040−12	35,000	12.0	14.5
3690746	24ACB336A30	CNPV*3717A**	58MV(B,C)060−14	35,000	12.0	14.5
3690748	24ACB336A30	CNPV*3717A**	58PH*070−16	35,000	11.5	14.0
3690886	24ACB336A30	CNPV*3717A**	58UVB060−14	35,000	12.0	14.5
4130744	24ACB336A30	CNPV*3717A**	58VLR105−12	34,200	12.2	14.5
4130743	24ACB336A30	CNPV*3717A**	58VMR105−12	34,200	12.2	14.5
4736101	24ACB336A30	CNPV*3717A**	59*N*A060V17**14	34,600	12.0	14.5
4736102	24ACB336A30	CNPV*3717A**	59*N*A080V17**14	34,800	12.0	14.5

See notes on page 45

COMBINATION RATINGS CONTINUED

AHRI Ref. No.	Model Number	Indoor Model	Furnace Model	Capacity	EER	SEER
4736103	24ACB336A30	CNPV*3717A**	59*P5A060E17**14	35,000	12.0	14.5
4736104	24ACB336A30	CNPV*3717A**	59*P5A080E17**16	35,000	12.0	14.5
4255247	24ACB336A30	CNPV*3717A**	OVLAAB036098	34,200	12.0	14.0
4130745	24ACB336A30	CNPV*3717A**	OVMAAB036098	34,200	12.0	14.0
4130747	24ACB336A30	CNPV*3717A**	OVMAAB042112	34,200	12.2	14.5
3690745	24ACB336A30	CNPV*3717A**+TDR		35,000	11.0	13.0
3101803	24ACB336A30	CNPV*4217A**	58CV(A,X)090−16	34,000	12.2	14.5
4130808	24ACB336A30	CNPV*4217A**	58HDV040−−12	34,200	11.5	13.5
4130809	24ACB336A30	CNPV*4217A**	58HDV060−−12	34,200	11.5	13.5
3612993	24ACB336A30	CNPV*4217A**	58ME(B,C)040−12	34,000	12.2	14.5
3101542	24ACB336A30	CNPV*4217A**	58ME(B,C)060−12	34,000	12.2	14.5
3101543	24ACB336A30	CNPV*4217A**	58ME(B,C)080−12	34,000	12.2	14.5
3101544	24ACB336A30	CNPV*4217A**	58ME(B,C)080−16	34,000	12.2	14.5
3101541	24ACB336A30	CNPV*4217A**	58MEB040−12	34,000	12.2	14.5
3101802	24ACB336A30	CNPV*4217A**	58MV(B,C)060−14	34,000	12.0	14.0
3101804	24ACB336A30	CNPV*4217A**	58PH*070−16	34,000	12.0	14.0
3756825	24ACB336A30	CNPV*4217A**	58UVB060−14	34,000	12.0	14.0
4130749	24ACB336A30	CNPV*4217A**	58VLR105−12	34,000	12.0	14.0
4130748	24ACB336A30	CNPV*4217A**	58VMR105−12	34,000	12.0	14.0
4736105	24ACB336A30	CNPV*4217A**	59*N*A060V17**14	34,000	11.8	14.2
4736106	24ACB336A30	CNPV*4217A**	59*N*A080V17**14	34,200	12.0	14.5
4736107	24ACB336A30	CNPV*4217A**	59*P5A060E17**14	34,400	11.8	14.2
4736108	24ACB336A30	CNPV*4217A**	59*P5A080E17**16	34,400	11.8	14.2
4255248	24ACB336A30	CNPV*4217A**	OVLAAB036098	34,000	11.7	14.0
4130750	24ACB336A30	CNPV*4217A**	OVMAAB036098	34,000	11.5	13.5
4130752	24ACB336A30	CNPV*4217A**	OVMAAB042112	34,000	12.0	14.0
3101805	24ACB336A30	CNPV*4217A**+TDR		34,000	11.0	13.2
3160023	24ACB336A30	CNPV*4221A**	58CV(A,X)090−16	34,000	12.0	14.5
3045398	24ACB336A30	CNPV*4221A**	58CV(A,X)110−20	34,600	11.7	14.5
4130810	24ACB336A30	CNPV*4221A**	58HDV040−−12	34,000	11.5	13.5
4130811	24ACB336A30	CNPV*4221A**	58HDV060−−12	34,000	11.5	13.5
4130812	24ACB336A30	CNPV*4221A**	58HDV080−−20	34,000	11.7	14.0
3101545	24ACB336A30	CNPV*4221A**	58ME(B,C)100−20	34,000	12.2	14.5
3045397	24ACB336A30	CNPV*4221A**	58MV(B,C)080−14	34,200	11.5	14.0
3045426	24ACB336A30	CNPV*4221A**	58MV(B,C)100−20	34,200	11.7	14.0
3045359	24ACB336A30	CNPV*4221A**	58PH*090−16	34,400	12.2	14.5
3045360	24ACB336A30	CNPV*4221A**	58PH*110−20	34,400	12.2	14.5
3756769	24ACB336A30	CNPV*4221A**	58UVB080−14	34,200	11.5	14.0
3756770	24ACB336A30	CNPV*4221A**	58UVB100−20	34,200	11.7	14.0
4130754	24ACB336A30	CNPV*4221A**	58VLR120−20	34,000	12.2	14.5
4130753	24ACB336A30	CNPV*4221A**	58VMR120−20	34,000	12.0	14.0
4736109	24ACB336A30	CNPV*4221A**	59*N*A060V17**14	33,600	11.8	14.2
4736110	24ACB336A30	CNPV*4221A**	59*N*A080V17**14	33,800	11.8	14.2
4736111	24ACB336A30	CNPV*4221A**	59*N*A100V21**20	34,000	12.0	14.5
4736112	24ACB336A30	CNPV*4221A**	59*P5A060E17**14	34,200	11.8	14.2
4736113	24ACB336A30	CNPV*4221A**	59*P5A080E17**16	34,200	11.8	14.2
4130755	24ACB336A30	CNPV*4221A**	OVLAAB048112	34,000	11.7	14.0
3045396	24ACB336A30	CNPV*4221A**+TDR		34,000	11.0	13.0
3690756	24ACB336A30	CNPV*4324A**	58CV(A,X)135−22	35,000	12.0	14.5
3690757	24ACB336A30	CNPV*4324A**	58CV(A,X)155−22	35,000	12.0	14.5
4130813	24ACB336A30	CNPV*4324A**	58HDV080−−20	34,000	12.2	14.5
4130814	24ACB336A30	CNPV*4324A**	58HDV100−−20	34,000	12.2	14.5
3690758	24ACB336A30	CNPV*4324A**	58HDV100−−20 (DWNFLW ONLY)	35,000	12.0	14.5
3690755	24ACB336A30	CNPV*4324A**	58MV(B,C)120−20	35,000	12.0	14.5
3690754	24ACB336A30	CNPV*4324A**	58MVB040−14	35,000	12.0	14.5
3690887	24ACB336A30	CNPV*4324A**	58UVB120−20	35,000	12.0	14.5
4736114	24ACB336A30	CNPV*4324A**	59*N*A100V21**20	35,000	12.5	15.0
4736115	24ACB336A30	CNPV*4324A**	59*N*A120V24**22	35,000	12.5	15.2
3690753	24ACB336A30	CNPV*4324A**+TDR		35,000	11.0	13.0
3045409	24ACB336A30	CSPH*3612A**	58CV(A,X)070−12	33,200	11.5	14.0
3690784	24ACB336A30	CSPH*3612A**	58HDV040−−12	34,400	11.0	13.5
3690785	24ACB336A30	CSPH*3612A**	58HDV060−−12	34,400	11.0	13.5
3690786	24ACB336A30	CSPH*3612A**	58HDV080−−20	34,400	11.5	14.0
3690787	24ACB336A30	CSPH*3612A**	58HDV100−−20	34,400	11.5	14.0
3612996	24ACB336A30	CSPH*3612A**	58ME(B,C)040−12	34,000	12.0	14.0
3101557	24ACB336A30	CSPH*3612A**	58ME(B,C)060−12	34,000	12.0	14.0
3101558	24ACB336A30	CSPH*3612A**	58ME(B,C)080−12	34,000	12.0	14.0
3101559	24ACB336A30	CSPH*3612A**	58ME(B,C)080−16	34,000	12.0	14.0
3101560	24ACB336A30	CSPH*3612A**	58ME(B,C)100−20	34,000	12.2	14.5
3101556	24ACB336A30	CSPH*3612A**	58MEB040−12	34,000	12.0	14.0
3045369	24ACB336A30	CSPH*3612A**	58PH*045−08	34,000	11.7	13.5
3045370	24ACB336A30	CSPH*3612A**	58PH*070−16	34,000	12.0	14.0
3045371	24ACB336A30	CSPH*3612A**	58PH*090−16	34,000	12.0	14.5
3045372	24ACB336A30	CSPH*3612A**	58PH*110−20	34,000	12.0	14.5
4130784	24ACB336A30	CSPH*3612A**	58VLR105−12	34,000	12.0	14.0
4130786	24ACB336A30	CSPH*3612A**	58VLR120−20	34,000	12.2	14.5
4130783	24ACB336A30	CSPH*3612A**	58VMR105−12	34,000	12.0	14.0
4130785	24ACB336A30	CSPH*3612A**	58VMR120−20	34,000	12.2	14.5

See notes on page 45

COMBINATION RATINGS CONTINUED

AHRI Ref. No.	Model Number	Indoor Model	Furnace Model	Capacity	EER	SEER
4736134	24ACB336A30	CSPH*3612A**	59*N*A060V17**14	34,200	11.8	14.2
4736135	24ACB336A30	CSPH*3612A**	59*N*A080V17**14	34,200	12.0	14.5
4736136	24ACB336A30	CSPH*3612A**	59*N*A100V21**20	34,400	12.0	14.5
4736137	24ACB336A30	CSPH*3612A**	59*N*A120V24**22	34,400	12.0	14.5
4736138	24ACB336A30	CSPH*3612A**	59*P5A060E17**14	34,600	11.8	14.2
4736139	24ACB336A30	CSPH*3612A**	59*P5A080E17**16	34,600	12.0	14.5
4255252	24ACB336A30	CSPH*3612A**	OVLAAB036098	34,000	11.7	14.0
4130790	24ACB336A30	CSPH*3612A**	OVLAAB048112	34,000	12.0	14.0
4130791	24ACB336A30	CSPH*3612A**	OVLAAB060154	34,000	12.2	14.5
4130787	24ACB336A30	CSPH*3612A**	OVMAAB036098	34,000	11.7	14.0
4130789	24ACB336A30	CSPH*3612A**	OVMAAB042112	34,000	12.0	14.0
3045407	24ACB336A30	CSPH*3612A**+TDR		33,600	11.0	13.0
3045412	24ACB336A30	CSPH*4212A**	58CV(A,X)070−12	34,000	11.2	13.5
3690788	24ACB336A30	CSPH*4212A**	58HDV040−−12	34,400	11.0	13.5
3690789	24ACB336A30	CSPH*4212A**	58HDV060−−12	34,400	11.5	14.0
3690790	24ACB336A30	CSPH*4212A**	58HDV080−−20	34,400	11.5	14.0
3690791	24ACB336A30	CSPH*4212A**	58HDV100−−20	34,400	12.0	14.5
3612997	24ACB336A30	CSPH*4212A**	58ME(B,C)040−12	34,000	12.2	14.5
3101562	24ACB336A30	CSPH*4212A**	58ME(B,C)060−12	34,000	12.2	14.5
3101563	24ACB336A30	CSPH*4212A**	58ME(B,C)080−12	34,000	12.2	14.5
3101564	24ACB336A30	CSPH*4212A**	58ME(B,C)080−16	34,000	12.2	14.5
3101565	24ACB336A30	CSPH*4212A**	58ME(B,C)100−20	34,000	12.2	14.5
3101561	24ACB336A30	CSPH*4212A**	58MEB040−12	34,000	12.2	14.5
3045373	24ACB336A30	CSPH*4212A**	58PH*045−08	34,400	11.7	13.5
3045374	24ACB336A30	CSPH*4212A**	58PH*070−16	34,400	12.0	14.0
3045375	24ACB336A30	CSPH*4212A**	58PH*090−16	34,400	12.2	14.5
3045376	24ACB336A30	CSPH*4212A**	58PH*110−20	34,400	12.2	14.5
4130793	24ACB336A30	CSPH*4212A**	58VLR105−12	34,200	12.2	14.5
4130795	24ACB336A30	CSPH*4212A**	58VLR120−20	34,200	12.2	14.5
4130792	24ACB336A30	CSPH*4212A**	58VMR105−12	34,200	12.2	14.5
4130794	24ACB336A30	CSPH*4212A**	58VMR120−20	34,200	12.2	14.5
4736140	24ACB336A30	CSPH*4212A**	59*N*A060V17**14	34,400	12.0	14.5
4736141	24ACB336A30	CSPH*4212A**	59*N*A080V17**14	34,400	12.0	14.5
4736142	24ACB336A30	CSPH*4212A**	59*N*A100V21**20	34,600	12.0	14.5
4736143	24ACB336A30	CSPH*4212A**	59*N*A120V24**22	34,600	12.5	15.0
4736144	24ACB336A30	CSPH*4212A**	59*P5A060E17**14	34,800	12.0	14.5
4736145	24ACB336A30	CSPH*4212A**	59*P5A080E17**16	34,800	12.0	14.5
4255253	24ACB336A30	CSPH*4212A**	OVLAAB036098	34,200	11.7	14.0
4130799	24ACB336A30	CSPH*4212A**	OVLAAB048112	34,200	12.0	14.0
4130800	24ACB336A30	CSPH*4212A**	OVLAAB060154	34,200	12.2	14.5
4130796	24ACB336A30	CSPH*4212A**	OVMAAB036098	34,200	11.7	14.0
4130798	24ACB336A30	CSPH*4212A**	OVMAAB042112	34,200	12.2	14.5
3045410	24ACB336A30	CSPH*4212A**+TDR		33,800	11.2	13.2
3874334	24ACB336A30	FB4CNF036		33,600	11.0	13.0
4208597	24ACB336A30	FB4CNF036+TXV		33,600	11.0	13.5
3874336	24ACB336A30	FB4CNF042		34,000	11.0	13.0
4208598	24ACB336A30	FB4CNF042+TXV		34,000	11.0	13.5
3045418	24ACB336A30	FE4AN(B,F)003+UI		34,000	11.7	14.5
3045419	24ACB336A30	FE4AN(B,F)005+UI		35,000	12.0	15.0
3045420	24ACB336A30	FE4ANB006+UI		35,400	12.0	15.0
3045417	24ACB336A30	FE4ANF002+UI		33,600	11.5	14.0
3045421	24ACB336A30	FF1ENP036		33,800	11.0	13.0
3457522	24ACB336A30	FF1ENP037		34,000	12.0	14.0
3404519	24ACB336A30	FV4CN(B,F)003		34,000	11.7	14.5
3404520	24ACB336A30	FV4CN(B,F)005		35,000	12.0	15.0
3404521	24ACB336A30	FV4CNB006		35,400	12.0	15.0
3404518	24ACB336A30	FV4CNF002		33,600	11.5	14.0
3752079	24ACB336A30	FX4DN(B,F)037		34,600	12.0	14.5
3752080	24ACB336A30	FX4DN(B,F)043		34,600	12.0	14.5
3752081	24ACB336A30	FX4DN(B,F)049		35,000	12.0	14.5
3874337	24ACB336A30	FY5BNF036		34,000	11.0	13.0
4208599	24ACB336A30	FY5BNF036+TXV		34,000	11.0	13.5
3874338	24ACB336A30	FY5BNF042		34,000	11.0	13.0
4208600	24ACB336A30	FY5BNF042+TXV		34,000	11.0	13.5
3046110	24ACB336A50	†CAP**3617A**+TDR		34,000	11.0	13.0
3046139	24ACB336A50	CAP**3614A**	58CV(A,X)070−12	33,000	11.2	13.5
3046111	24ACB336A50	CAP**3614A**	58PH*045−08	33,600	11.0	13.2
3046138	24ACB336A50	CAP**3614A**+TDR		33,000	11.0	13.0
3046141	24ACB336A50	CAP**3617A**	58CV(A,X)090−16	33,600	11.5	14.0
3613203	24ACB336A50	CAP**3617A**	58ME(B,C)040−12	34,000	12.0	14.0
3123988	24ACB336A50	CAP**3617A**	58ME(B,C)060−12	34,000	12.0	14.0
3123989	24ACB336A50	CAP**3617A**	58ME(B,C)080−12	34,000	12.0	14.0
3123990	24ACB336A50	CAP**3617A**	58ME(B,C)080−16	34,000	12.0	14.0
3123987	24ACB336A50	CAP**3617A**	58MEB040−12	34,000	12.0	14.0
3046140	24ACB336A50	CAP**3617A**	58MV(B,C)060−14	33,600	11.5	14.0
3046112	24ACB336A50	CAP**3617A**	58PH*070−16	33,800	11.7	13.5
3673147	24ACB336A50	CAP**3617A**	58UVB060−14	33,600	11.5	14.0
3046144	24ACB336A50	CAP**3621A**	58CV(A,X)110−20	33,800	11.5	14.0
3123991	24ACB336A50	CAP**3621A**	58ME(B,C)100−20	34,000	12.2	14.5

See notes on page 45

COMBINATION RATINGS CONTINUED

AHRI Ref. No.	Model Number	Indoor Model	Furnace Model	Capacity	EER	SEER
3046143	24ACB336A50	CAP**3621A**	58MV(B,C)080−14	33,600	11.2	13.5
3046113	24ACB336A50	CAP**3621A**	58PH*090−16	34,000	12.0	14.5
3046114	24ACB336A50	CAP**3621A**	58PH*110−20	34,000	12.0	14.5
3673148	24ACB336A50	CAP**3621A**	58UVB080−14	33,600	11.2	13.5
3046142	24ACB336A50	CAP**3621A**+TDR		34,000	11.0	13.0
3046147	24ACB336A50	CAP**4221A**	58CV(A,X)110−20	34,000	11.5	14.0
3123992	24ACB336A50	CAP**4221A**	58ME(B,C)100−20	34,000	12.2	14.5
3046146	24ACB336A50	CAP**4221A**	58MV(B,C)080−14	33,800	11.5	14.0
3046115	24ACB336A50	CAP**4221A**	58PH*090−16	34,400	12.2	14.5
3046116	24ACB336A50	CAP**4221A**	58PH*110−20	34,400	12.2	14.5
3673149	24ACB336A50	CAP**4221A**	58UVB080−14	33,800	11.5	14.0
3046145	24ACB336A50	CAP**4221A**+TDR		34,000	11.0	13.0
3046150	24ACB336A50	CAP**4224A**	58CV(A,X)135−22	34,000	11.7	14.5
3046148	24ACB336A50	CAP**4224A**+TDR		34,000	11.0	13.0
3046162	24ACB336A50	CNPH*3617A**	58CV(A,X)070−12	33,200	11.2	13.5
3613206	24ACB336A50	CNPH*3617A**	58ME(B,C)040−12	34,000	12.0	14.0
3124004	24ACB336A50	CNPH*3617A**	58ME(B,C)060−12	34,000	12.0	14.0
3124005	24ACB336A50	CNPH*3617A**	58ME(B,C)080−12	33,800	12.0	14.0
3124006	24ACB336A50	CNPH*3617A**	58ME(B,C)080−16	34,000	12.0	14.0
3124007	24ACB336A50	CNPH*3617A**	58ME(B,C)100−20	33,800	12.0	14.0
3124003	24ACB336A50	CNPH*3617A**	58MEB040−12	34,000	12.0	14.0
3046122	24ACB336A50	CNPH*3617A**	58PH*045−08	33,600	11.0	13.2
3046123	24ACB336A50	CNPH*3617A**	58PH*070−16	33,600	11.7	13.5
3046124	24ACB336A50	CNPH*3617A**	58PH*090−16	34,000	12.0	14.0
3046125	24ACB336A50	CNPH*3617A**	58PH*110−20	34,000	12.0	14.0
3046160	24ACB336A50	CNPH*3617A**+TDR		33,800	11.0	13.0
3046166	24ACB336A50	CNPH*4221A**	58CV(A,X)070−12	34,200	11.5	14.0
3613207	24ACB336A50	CNPH*4221A**	58ME(B,C)040−12	34,000	12.0	14.0
3124009	24ACB336A50	CNPH*4221A**	58ME(B,C)060−12	34,000	12.0	14.0
3124010	24ACB336A50	CNPH*4221A**	58ME(B,C)080−12	34,000	12.0	14.0
3124011	24ACB336A50	CNPH*4221A**	58ME(B,C)080−16	34,000	12.0	14.0
3124012	24ACB336A50	CNPH*4221A**	58ME(B,C)100−20	34,000	12.2	14.5
3124008	24ACB336A50	CNPH*4221A**	58MEB040−12	34,000	12.0	14.0
3046165	24ACB336A50	CNPH*4221A**	58MV(B,C)060−14	34,400	11.5	14.0
3046126	24ACB336A50	CNPH*4221A**	58PH*045−08	34,000	11.5	13.5
3046127	24ACB336A50	CNPH*4221A**	58PH*070−16	34,200	11.7	14.0
3046128	24ACB336A50	CNPH*4221A**	58PH*090−16	34,400	12.2	14.5
3046129	24ACB336A50	CNPH*4221A**	58PH*110−20	34,400	12.2	14.5
3046163	24ACB336A50	CNPH*4221A**+TDR		34,000	11.0	13.0
3046153	24ACB336A50	CNPV*3617A**	58CV(A,X)090−16	33,400	11.5	14.0
3613204	24ACB336A50	CNPV*3617A**	58ME(B,C)040−12	34,000	12.0	14.0
3123994	24ACB336A50	CNPV*3617A**	58ME(B,C)060−12	34,000	12.0	14.0
3123995	24ACB336A50	CNPV*3617A**	58ME(B,C)080−12	33,800	12.0	14.0
3123996	24ACB336A50	CNPV*3617A**	58ME(B,C)080−16	34,000	12.0	14.0
3123993	24ACB336A50	CNPV*3617A**	58MEB040−12	34,000	12.0	14.0
3046152	24ACB336A50	CNPV*3617A**	58MV(B,C)060−14	33,200	11.2	13.5
3046117	24ACB336A50	CNPV*3617A**	58PH*070−16	33,600	11.7	13.5
3756781	24ACB336A50	CNPV*3617A**	58UVB060−14	33,200	11.2	13.5
3046151	24ACB336A50	CNPV*3617A**+TDR		33,800	11.0	13.0
3046156	24ACB336A50	CNPV*3621A**	58CV(A,X)110−20	33,800	11.2	13.5
3123997	24ACB336A50	CNPV*3621A**	58ME(B,C)100−20	33,800	12.2	14.5
3046155	24ACB336A50	CNPV*3621A**	58MV(B,C)080−14	33,600	11.0	13.0
3046118	24ACB336A50	CNPV*3621A**	58PH*090−16	34,000	12.0	14.0
3046119	24ACB336A50	CNPV*3621A**	58PH*110−20	34,000	12.0	14.0
3756782	24ACB336A50	CNPV*3621A**	58UVB080−14	33,600	11.0	13.0
3046154	24ACB336A50	CNPV*3621A**+TDR		33,800	11.0	13.0
3613205	24ACB336A50	CNPV*4217A**	58ME(B,C)040−12	34,000	12.2	14.5
3123999	24ACB336A50	CNPV*4217A**	58ME(B,C)060−12	34,000	12.2	14.5
3124000	24ACB336A50	CNPV*4217A**	58ME(B,C)080−12	34,000	12.2	14.5
3124001	24ACB336A50	CNPV*4217A**	58ME(B,C)080−16	34,000	12.2	14.5
3123998	24ACB336A50	CNPV*4217A**	58MEB040−12	34,000	12.2	14.5
3046159	24ACB336A50	CNPV*4221A**	58CV(A,X)110−20	34,600	11.7	14.5
3124002	24ACB336A50	CNPV*4221A**	58ME(B,C)100−20	34,000	12.2	14.5
3046158	24ACB336A50	CNPV*4221A**	58MV(B,C)080−14	34,200	11.5	14.0
3046187	24ACB336A50	CNPV*4221A**	58MV(B,C)100−20	34,200	11.7	14.0
3046120	24ACB336A50	CNPV*4221A**	58PH*090−16	34,400	12.2	14.5
3046121	24ACB336A50	CNPV*4221A**	58PH*110−20	34,400	12.2	14.5
3756783	24ACB336A50	CNPV*4221A**	58UVB080−14	34,200	11.5	14.0
3756784	24ACB336A50	CNPV*4221A**	58UVB100−20	34,200	11.7	14.0
3046157	24ACB336A50	CNPV*4221A**+TDR		34,000	11.0	13.0
3046170	24ACB336A50	CSPH*3612A**	58CV(A,X)070−12	33,200	11.5	14.0
3613208	24ACB336A50	CSPH*3612A**	58ME(B,C)040−12	34,000	12.0	14.0
3124014	24ACB336A50	CSPH*3612A**	58ME(B,C)060−12	34,000	12.0	14.0
3124015	24ACB336A50	CSPH*3612A**	58ME(B,C)080−12	34,000	12.0	14.0
3124016	24ACB336A50	CSPH*3612A**	58ME(B,C)080−16	34,000	12.0	14.0
3124017	24ACB336A50	CSPH*3612A**	58ME(B,C)100−20	34,000	12.2	14.5
3124013	24ACB336A50	CSPH*3612A**	58MEB040−12	34,000	12.0	14.0
3046130	24ACB336A50	CSPH*3612A**	58PH*045−08	34,000	11.7	13.5
3046131	24ACB336A50	CSPH*3612A**	58PH*070−16	34,000	12.0	14.0

See notes on page 45

COMBINATION RATINGS CONTINUED

AHRI Ref. No.	Model Number	Indoor Model	Furnace Model	Capacity	EER	SEER
3046132	24ACB336A50	CSPH*3612A**	58PH*090−16	34,000	12.0	14.5
3046133	24ACB336A50	CSPH*3612A**	58PH*110−20	34,000	12.0	14.5
3046168	24ACB336A50	CSPH*3612A**+TDR		33,600	11.0	13.0
3046173	24ACB336A50	CSPH*4212A**	58CV(A,X)070−12	34,000	11.2	13.5
3613209	24ACB336A50	CSPH*4212A**	58ME(B,C)040−12	34,000	12.2	14.5
3124019	24ACB336A50	CSPH*4212A**	58ME(B,C)060−12	34,000	12.2	14.5
3124020	24ACB336A50	CSPH*4212A**	58ME(B,C)080−12	34,000	12.2	14.5
3124021	24ACB336A50	CSPH*4212A**	58ME(B,C)080−16	34,000	12.2	14.5
3124022	24ACB336A50	CSPH*4212A**	58ME(B,C)100−20	34,000	12.2	14.5
3124018	24ACB336A50	CSPH*4212A**	58MEB040−12	34,000	12.2	14.5
3046134	24ACB336A50	CSPH*4212A**	58PH*045−08	34,400	11.7	13.5
3046135	24ACB336A50	CSPH*4212A**	58PH*070−16	34,400	12.0	14.0
3046136	24ACB336A50	CSPH*4212A**	58PH*090−16	34,400	12.2	14.5
3046137	24ACB336A50	CSPH*4212A**	58PH*110−20	34,400	12.2	14.5
3046171	24ACB336A50	CSPH*4212A**+TDR		33,800	11.2	13.2
4208627	24ACB336A50	FB4CNF036		33,600	11.0	13.0
4208628	24ACB336A50	FB4CNF036+TXV		33,600	11.0	13.5
4208629	24ACB336A50	FB4CNF042		34,000	11.0	13.0
4208630	24ACB336A50	FB4CNF042+TXV		34,000	11.0	13.5
3046179	24ACB336A50	FE4AN(B,F)003+UI		34,000	11.7	14.5
3046180	24ACB336A50	FE4AN(B,F)005+UI		35,000	12.0	15.0
3046181	24ACB336A50	FE4ANB006+UI		35,400	12.0	15.0
3046178	24ACB336A50	FE4ANF002+UI		33,600	11.5	14.0
3046182	24ACB336A50	FF1ENP036		33,800	11.0	13.0
3404531	24ACB336A50	FV4CN(B,F)003		34,000	11.7	14.5
3404532	24ACB336A50	FV4CN(B,F)005		35,000	12.0	15.0
3404533	24ACB336A50	FV4CNB006		35,400	12.0	15.0
3404530	24ACB336A50	FV4CNF002		33,600	11.5	14.0
4208631	24ACB336A50	FY5BNF036		34,000	11.0	13.0
4208632	24ACB336A50	FY5BNF036+TXV		34,000	11.0	13.5
4208633	24ACB336A50	FY5BNF042		34,000	11.0	13.0
4208634	24ACB336A50	FY5BNF042+TXV		34,000	11.0	13.5
3046231	24ACB336A60	†CAP**3617A**+TDR		34,000	11.0	13.0
3046260	24ACB336A60	CAP**3614A**	58CV(A,X)070−12	33,000	11.2	13.5
3046232	24ACB336A60	CAP**3614A**	58PH*045−08	33,600	11.0	13.2
3046259	24ACB336A60	CAP**3614A**+TDR		33,000	11.0	13.0
3046262	24ACB336A60	CAP**3617A**	58CV(A,X)090−16	33,600	11.5	14.0
3613216	24ACB336A60	CAP**3617A**	58ME(B,C)040−12	34,000	12.0	14.0
3124092	24ACB336A60	CAP**3617A**	58ME(B,C)060−12	34,000	12.0	14.0
3124093	24ACB336A60	CAP**3617A**	58ME(B,C)080−12	34,000	12.0	14.0
3124094	24ACB336A60	CAP**3617A**	58ME(B,C)080−16	34,000	12.0	14.0
3124091	24ACB336A60	CAP**3617A**	58MEB040−12	34,000	12.0	14.0
3046261	24ACB336A60	CAP**3617A**	58MV(B,C)060−14	33,600	11.5	14.0
3046233	24ACB336A60	CAP**3617A**	58PH*070−16	33,800	11.7	13.5
3673150	24ACB336A60	CAP**3617A**	58UVB060−14	33,600	11.5	14.0
3046265	24ACB336A60	CAP**3621A**	58CV(A,X)110−20	33,800	11.5	14.0
3124095	24ACB336A60	CAP**3621A**	58ME(B,C)100−20	34,000	12.2	14.5
3046264	24ACB336A60	CAP**3621A**	58MV(B,C)080−14	33,600	11.2	13.5
3046234	24ACB336A60	CAP**3621A**	58PH*090−16	34,000	12.0	14.5
3046235	24ACB336A60	CAP**3621A**	58PH*110−20	34,000	12.0	14.5
3673151	24ACB336A60	CAP**3621A**	58UVB080−14	33,600	11.2	13.5
3046263	24ACB336A60	CAP**3621A**+TDR		34,000	11.0	13.0
3046268	24ACB336A60	CAP**4221A**	58CV(A,X)110−20	34,000	11.5	14.0
3124096	24ACB336A60	CAP**4221A**	58ME(B,C)100−20	34,000	12.2	14.5
3046267	24ACB336A60	CAP**4221A**	58MV(B,C)080−14	33,800	11.5	14.0
3046236	24ACB336A60	CAP**4221A**	58PH*090−16	34,400	12.2	14.5
3046237	24ACB336A60	CAP**4221A**	58PH*110−20	34,400	12.2	14.5
3673152	24ACB336A60	CAP**4221A**	58UVB080−14	33,800	11.5	14.0
3046266	24ACB336A60	CAP**4221A**+TDR		34,000	11.0	13.0
3046271	24ACB336A60	CAP**4224A**	58CV(A,X)135−22	34,000	11.7	14.5
3046269	24ACB336A60	CAP**4224A**+TDR		34,000	11.0	13.0
3046283	24ACB336A60	CNPH*3617A**	58CV(A,X)070−12	33,200	11.2	13.5
3613219	24ACB336A60	CNPH*3617A**	58ME(B,C)040−12	34,000	12.0	14.0
3124108	24ACB336A60	CNPH*3617A**	58ME(B,C)060−12	34,000	12.0	14.0
3124109	24ACB336A60	CNPH*3617A**	58ME(B,C)080−12	33,800	12.0	14.0
3124110	24ACB336A60	CNPH*3617A**	58ME(B,C)080−16	34,000	12.0	14.0
3124111	24ACB336A60	CNPH*3617A**	58ME(B,C)100−20	33,800	12.0	14.0
3124107	24ACB336A60	CNPH*3617A**	58MEB040−12	34,000	12.0	14.0
3046243	24ACB336A60	CNPH*3617A**	58PH*045−08	33,600	11.0	13.2
3046244	24ACB336A60	CNPH*3617A**	58PH*070−16	33,600	11.7	13.5
3046245	24ACB336A60	CNPH*3617A**	58PH*090−16	34,000	12.0	14.0
3046246	24ACB336A60	CNPH*3617A**	58PH*110−20	34,000	12.0	14.0
3046281	24ACB336A60	CNPH*3617A**+TDR		33,800	11.0	13.0
3046287	24ACB336A60	CNPH*4221A**	58CV(A,X)070−12	34,200	11.5	14.0
3613220	24ACB336A60	CNPH*4221A**	58ME(B,C)040−12	34,000	12.0	14.0
3124113	24ACB336A60	CNPH*4221A**	58ME(B,C)060−12	34,000	12.0	14.0
3124114	24ACB336A60	CNPH*4221A**	58ME(B,C)080−12	34,000	12.0	14.0
3124115	24ACB336A60	CNPH*4221A**	58ME(B,C)080−16	34,000	12.0	14.0
3124116	24ACB336A60	CNPH*4221A**	58ME(B,C)100−20	34,000	12.2	14.5

See notes on page 45

COMBINATION RATINGS CONTINUED

AHRI Ref. No.	Model Number	Indoor Model	Furnace Model	Capacity	EER	SEER
3124112	24ACB336A60	CNPH*4221A**	58MEB040−12	34,000	12.0	14.0
3046286	24ACB336A60	CNPH*4221A**	58MV(B,C)060−14	34,400	11.5	14.0
3046247	24ACB336A60	CNPH*4221A**	58PH*045−08	34,000	11.5	13.5
3046248	24ACB336A60	CNPH*4221A**	58PH*070−16	34,200	11.7	14.0
3046249	24ACB336A60	CNPH*4221A**	58PH*090−16	34,400	12.2	14.5
3046250	24ACB336A60	CNPH*4221A**	58PH*110−20	34,400	12.2	14.5
3046284	24ACB336A60	CNPH*4221A**+TDR		34,000	11.0	13.0
3046274	24ACB336A60	CNPV*3617A**	58CV(A,X)090−16	33,400	11.5	14.0
3613217	24ACB336A60	CNPV*3617A**	58ME(B,C)040−12	34,000	12.0	14.0
3124098	24ACB336A60	CNPV*3617A**	58ME(B,C)060−12	34,000	12.0	14.0
3124099	24ACB336A60	CNPV*3617A**	58ME(B,C)080−12	33,800	12.0	14.0
3124100	24ACB336A60	CNPV*3617A**	58ME(B,C)080−16	34,000	12.0	14.0
3124097	24ACB336A60	CNPV*3617A**	58MEB040−12	34,000	12.0	14.0
3046273	24ACB336A60	CNPV*3617A**	58MV(B,C)060−14	33,200	11.2	13.5
3046238	24ACB336A60	CNPV*3617A**	58PH*070−16	33,600	11.7	13.5
3756785	24ACB336A60	CNPV*3617A**	58UVB060−14	33,200	11.2	13.5
3046272	24ACB336A60	CNPV*3617A**+TDR		33,800	11.0	13.0
3046277	24ACB336A60	CNPV*3621A**	58CV(A,X)110−20	33,800	11.2	13.5
3124101	24ACB336A60	CNPV*3621A**	58ME(B,C)100−20	33,800	12.2	14.5
3046276	24ACB336A60	CNPV*3621A**	58MV(B,C)080−14	33,600	11.0	13.0
3046239	24ACB336A60	CNPV*3621A**	58PH*090−16	34,000	12.0	14.0
3046240	24ACB336A60	CNPV*3621A**	58PH*110−20	34,000	12.0	14.0
3756786	24ACB336A60	CNPV*3621A**	58UVB080−14	33,600	11.0	13.0
3046275	24ACB336A60	CNPV*3621A**+TDR		33,800	11.0	13.0
3613218	24ACB336A60	CNPV*4217A**	58ME(B,C)040−12	34,000	12.2	14.5
3124103	24ACB336A60	CNPV*4217A**	58ME(B,C)060−12	34,000	12.2	14.5
3124104	24ACB336A60	CNPV*4217A**	58ME(B,C)080−12	34,000	12.2	14.5
3124105	24ACB336A60	CNPV*4217A**	58ME(B,C)080−16	34,000	12.2	14.5
3124102	24ACB336A60	CNPV*4217A**	58MEB040−12	34,000	12.2	14.5
3046280	24ACB336A60	CNPV*4221A**	58CV(A,X)110−20	34,600	11.7	14.5
3124106	24ACB336A60	CNPV*4221A**	58ME(B,C)100−20	34,000	12.2	14.5
3046279	24ACB336A60	CNPV*4221A**	58MV(B,C)080−14	34,200	11.5	14.0
3046308	24ACB336A60	CNPV*4221A**	58MV(B,C)100−20	34,200	11.7	14.0
3046241	24ACB336A60	CNPV*4221A**	58PH*090−16	34,400	12.2	14.5
3046242	24ACB336A60	CNPV*4221A**	58PH*110−20	34,400	12.2	14.5
3756787	24ACB336A60	CNPV*4221A**	58UVB080−14	34,200	11.5	14.0
3756788	24ACB336A60	CNPV*4221A**	58UVB100−20	34,200	11.7	14.0
3046278	24ACB336A60	CNPV*4221A**+TDR		34,000	11.0	13.0
3046291	24ACB336A60	CSPH*3612A**	58CV(A,X)070−12	33,200	11.5	14.0
3613221	24ACB336A60	CSPH*3612A**	58ME(B,C)040−12	34,000	12.0	14.0
3124118	24ACB336A60	CSPH*3612A**	58ME(B,C)060−12	34,000	12.0	14.0
3124119	24ACB336A60	CSPH*3612A**	58ME(B,C)080−12	34,000	12.0	14.0
3124120	24ACB336A60	CSPH*3612A**	58ME(B,C)080−16	34,000	12.0	14.0
3124121	24ACB336A60	CSPH*3612A**	58ME(B,C)100−20	34,000	12.2	14.5
3124117	24ACB336A60	CSPH*3612A**	58MEB040−12	34,000	12.0	14.0
3046251	24ACB336A60	CSPH*3612A**	58PH*045−08	34,000	11.7	13.5
3046252	24ACB336A60	CSPH*3612A**	58PH*070−16	34,000	12.0	14.0
3046253	24ACB336A60	CSPH*3612A**	58PH*090−16	34,000	12.0	14.5
3046254	24ACB336A60	CSPH*3612A**	58PH*110−20	34,000	12.0	14.5
3046289	24ACB336A60	CSPH*3612A**+TDR		33,600	11.0	13.0
3046294	24ACB336A60	CSPH*4212A**	58CV(A,X)070−12	34,000	11.2	13.5
3613222	24ACB336A60	CSPH*4212A**	58ME(B,C)040−12	34,000	12.2	14.5
3124123	24ACB336A60	CSPH*4212A**	58ME(B,C)060−12	34,000	12.2	14.5
3124124	24ACB336A60	CSPH*4212A**	58ME(B,C)080−12	34,000	12.2	14.5
3124125	24ACB336A60	CSPH*4212A**	58ME(B,C)080−16	34,000	12.2	14.5
3124126	24ACB336A60	CSPH*4212A**	58ME(B,C)100−20	34,000	12.2	14.5
3124122	24ACB336A60	CSPH*4212A**	58MEB040−12	34,000	12.2	14.5
3046255	24ACB336A60	CSPH*4212A**	58PH*045−08	34,400	11.7	13.5
3046256	24ACB336A60	CSPH*4212A**	58PH*070−16	34,400	12.0	14.0
3046257	24ACB336A60	CSPH*4212A**	58PH*090−16	34,400	12.2	14.5
3046258	24ACB336A60	CSPH*4212A**	58PH*110−20	34,400	12.2	14.5
3046292	24ACB336A60	CSPH*4212A**+TDR		33,800	11.2	13.2
4208656	24ACB336A60	FB4CNF036		33,600	11.0	13.0
4208657	24ACB336A60	FB4CNF036+TXV		33,600	11.0	13.5
4208658	24ACB336A60	FB4CNF042		34,000	11.0	13.0
4208659	24ACB336A60	FB4CNF042+TXV		34,000	11.0	13.5
3046300	24ACB336A60	FE4AN(B,F)003+UI		34,000	11.7	14.5
3046301	24ACB336A60	FE4AN(B,F)005+UI		35,000	12.0	15.0
3046302	24ACB336A60	FE4ANB006+UI		35,400	12.0	15.0
3046299	24ACB336A60	FE4ANF002+UI		33,600	11.5	14.0
3046303	24ACB336A60	FF1ENP036		33,800	11.0	13.0
3404535	24ACB336A60	FV4CN(B,F)003		34,000	11.7	14.5
3404536	24ACB336A60	FV4CN(B,F)005		35,000	12.0	15.0
3404537	24ACB336A60	FV4CNB006		35,400	12.0	15.0
3404534	24ACB336A60	FV4CNF002		33,600	11.5	14.0
4208660	24ACB336A60	FY5BNF036		34,000	11.0	13.0
4208661	24ACB336A60	FY5BNF036+TXV		34,000	11.0	13.5
4208662	24ACB336A60	FY5BNF042		34,000	11.0	13.0
4208663	24ACB336A60	FY5BNF042+TXV		34,000	11.0	13.5

See notes on page 45

COMBINATION RATINGS CONTINUED

AHRI Ref. No.	Model Number	Indoor Model	Furnace Model	Capacity	EER	SEER
3045427	24ACB342A30	†CAP**4221A**+TDR		41,000	11.0	13.0
3045457	24ACB342A30	CAP**4221A**	58CV(A,X)110−20	40,500	11.2	13.5
3101566	24ACB342A30	CAP**4221A**	58ME(B,C)100−20	40,500	12.0	14.0
3045456	24ACB342A30	CAP**4221A**	58MV(B,C)080−14	40,000	11.2	13.5
3045428	24ACB342A30	CAP**4221A**	58PH*090−16	40,500	11.7	14.0
3045429	24ACB342A30	CAP**4221A**	58PH*110−20	40,500	12.0	14.0
3673153	24ACB342A30	CAP**4221A**	58UVB080−14	40,000	11.2	13.5
4130824	24ACB342A30	CAP**4221A**	58VLR120−20	40,000	11.7	13.5
4130823	24ACB342A30	CAP**4221A**	58VMR120−20	40,000	11.5	13.5
4736146	24ACB342A30	CAP**4221A**	59*N*A060V17**14	39,500	11.4	13.7
4736147	24ACB342A30	CAP**4221A**	59*N*A080V17**14	39,500	11.4	13.7
4736148	24ACB342A30	CAP**4221A**	59*N*A100V21**20	39,500	11.5	14.0
4736149	24ACB342A30	CAP**4221A**	59*P5A060E17**14	40,000	11.2	13.5
4736150	24ACB342A30	CAP**4221A**	59*P5A080E17**16	40,000	11.4	13.7
4736151	24ACB342A30	CAP**4221A**	59*P5A100E21**16	40,000	11.4	13.7
4130825	24ACB342A30	CAP**4221A**	OVLAAB048112	40,000	11.0	13.2
3045460	24ACB342A30	CAP**4224A**	58CV(A,X)135−22	40,500	11.5	14.0
3101567	24ACB342A30	CAP**4224A**	58ME(B,C)120−20	40,500	12.0	14.0
3045430	24ACB342A30	CAP**4224A**	58PH*135−20	40,500	11.7	14.0
4736152	24ACB342A30	CAP**4224A**	59*N*A100V21**20	39,500	11.5	14.0
4736153	24ACB342A30	CAP**4224A**	59*N*A120V24**22	39,500	11.8	14.2
4736154	24ACB342A30	CAP**4224A**	59*P5A100E21**16	40,000	11.4	13.7
4736155	24ACB342A30	CAP**4224A**	59*P5A120E24**22	40,500	11.8	14.2
3045458	24ACB342A30	CAP**4224A**+TDR		41,000	11.0	13.0
3045463	24ACB342A30	CAP**4817A**	58CV(A,X)090−16	40,000	11.5	14.0
3612998	24ACB342A30	CAP**4817A**	58ME(B,C)040−12	41,000	11.7	14.0
3101569	24ACB342A30	CAP**4817A**	58ME(B,C)060−12	41,000	11.7	13.5
3101570	24ACB342A30	CAP**4817A**	58ME(B,C)080−12	41,000	12.0	14.0
3101571	24ACB342A30	CAP**4817A**	58ME(B,C)080−16	41,000	12.0	14.0
3101568	24ACB342A30	CAP**4817A**	58MEB040−12	41,000	11.7	14.0
3045462	24ACB342A30	CAP**4817A**	58MV(B,C)060−14	40,000	11.5	14.0
3045431	24ACB342A30	CAP**4817A**	58PH*070−16	41,000	11.5	13.5
3673154	24ACB342A30	CAP**4817A**	58UVB060−14	40,000	11.5	14.0
4736156	24ACB342A30	CAP**4817A**	59*N*A060V17**14	40,500	11.4	13.7
4736157	24ACB342A30	CAP**4817A**	59*N*A080V17**14	40,500	11.5	14.0
4736158	24ACB342A30	CAP**4817A**	59*P5A060E17**14	41,000	11.4	13.7
4736159	24ACB342A30	CAP**4817A**	59*P5A080E17**16	41,000	11.4	13.7
4130826	24ACB342A30	CAP**4817A**	OVMAAB042112	41,000	11.5	13.5
3045461	24ACB342A30	CAP**4817A**+TDR		40,000	11.0	13.2
3045466	24ACB342A30	CAP**4821A**	58CV(A,X)110−20	41,000	11.5	14.0
3101572	24ACB342A30	CAP**4821A**	58ME(B,C)100−20	41,000	12.0	14.0
3045465	24ACB342A30	CAP**4821A**	58MV(B,C)080−14	40,500	11.2	13.5
3045432	24ACB342A30	CAP**4821A**	58PH*090−16	41,000	12.0	14.0
3045433	24ACB342A30	CAP**4821A**	58PH*110−20	41,000	12.0	14.0
3673155	24ACB342A30	CAP**4821A**	58UVB080−14	40,500	11.2	13.5
4130828	24ACB342A30	CAP**4821A**	58VLR120−20	40,500	11.7	14.0
4130827	24ACB342A30	CAP**4821A**	58VMR120−20	40,500	11.7	14.0
4736160	24ACB342A30	CAP**4821A**	59*N*A060V17**14	40,000	11.4	13.7
4736161	24ACB342A30	CAP**4821A**	59*N*A080V17**14	40,000	11.5	14.0
4736162	24ACB342A30	CAP**4821A**	59*N*A100V21**20	40,500	11.8	14.2
4736163	24ACB342A30	CAP**4821A**	59*P5A060E17**14	40,500	11.4	13.7
4736164	24ACB342A30	CAP**4821A**	59*P5A080E17**16	40,500	11.4	13.7
4736165	24ACB342A30	CAP**4821A**	59*P5A100E21**16	40,500	11.5	14.0
4130829	24ACB342A30	CAP**4821A**	OVLAAB048112	41,000	11.0	13.2
3045464	24ACB342A30	CAP**4821A**+TDR		41,500	11.0	13.2
3690702	24ACB342A30	CAP**4823A**	58HDV080−−20	41,500	11.5	14.0
4736170	24ACB342A30	CAP**4823A**	59*N*A100V21**20	40,500	11.8	14.2
4736171	24ACB342A30	CAP**4823A**	59*N*A120V24**22	40,500	11.8	14.2
4736172	24ACB342A30	CAP**4823A**	59*P5A100E21**16	40,500	11.5	14.0
4736173	24ACB342A30	CAP**4823A**	59*P5A120E24**22	41,000	11.8	14.2
3644877	24ACB342A30	CAP**4823A**+TDR		41,500	11.0	13.2
3045469	24ACB342A30	CAP**4824A**	58CV(A,X)135−22	41,000	11.7	14.5
3101573	24ACB342A30	CAP**4824A**	58ME(B,C)120−20	41,000	12.2	14.5
3045434	24ACB342A30	CAP**4824A**	58PH*135−20	41,000	12.0	14.0
4736166	24ACB342A30	CAP**4824A**	59*N*A100V21**20	40,500	11.8	14.2
4736167	24ACB342A30	CAP**4824A**	59*N*A120V24**22	40,500	12.0	14.5
4736168	24ACB342A30	CAP**4824A**	59*P5A100E21**16	40,500	11.5	14.0
4736169	24ACB342A30	CAP**4824A**	59*P5A120E24**22	41,000	11.8	14.2
3045467	24ACB342A30	CAP**4824A**+TDR		41,500	11.0	13.2
3690742	24ACB342A30	CAP**6025A**	58HDV100−−20	42,000	12.0	14.5
3644878	24ACB342A30	CAP**6025A**+TDR		41,500	11.0	13.2
3045481	24ACB342A30	CNPH*4221A**	58CV(A,X)070−12	40,500	11.2	13.5
4130871	24ACB342A30	CNPH*4221A**	58HDV060−−12	40,000	11.0	13.2
4130872	24ACB342A30	CNPH*4221A**	58HDV080−−20	40,500	11.5	13.5
4130873	24ACB342A30	CNPH*4221A**	58HDV100−−20	40,000	11.5	13.5
3613000	24ACB342A30	CNPH*4221A**	58ME(B,C)040−12	40,500	11.7	13.5
3101582	24ACB342A30	CNPH*4221A**	58ME(B,C)060−12	40,500	11.5	13.5
3101583	24ACB342A30	CNPH*4221A**	58ME(B,C)080−12	40,500	11.7	13.5

See notes on page 45

COMBINATION RATINGS CONTINUED

AHRI Ref. No.	Model Number	Indoor Model	Furnace Model	Capacity	EER	SEER
3101584	24ACB342A30	CNPH*4221A**	58ME(B,C)080−16	40,000	11.7	13.5
3101585	24ACB342A30	CNPH*4221A**	58ME(B,C)100−20	40,500	12.0	14.0
3101586	24ACB342A30	CNPH*4221A**	58ME(B,C)120−20	40,500	12.0	14.0
3101581	24ACB342A30	CNPH*4221A**	58MEB040−12	40,500	11.7	13.5
3045440	24ACB342A30	CNPH*4221A**	58PH*070−16	40,000	11.0	13.0
3045441	24ACB342A30	CNPH*4221A**	58PH*090−16	40,500	11.7	14.0
3045442	24ACB342A30	CNPH*4221A**	58PH*110−20	40,500	11.7	14.0
3045443	24ACB342A30	CNPH*4221A**	58PH*135−20	40,500	11.7	14.0
4130838	24ACB342A30	CNPH*4221A**	58VLR120−20	40,000	11.7	13.5
4130837	24ACB342A30	CNPH*4221A**	58VMR120−20	40,000	11.5	13.5
4736198	24ACB342A30	CNPH*4221A**	59*N*A060V17**14	39,500	11.2	13.5
4736199	24ACB342A30	CNPH*4221A**	59*N*A080V17**14	39,500	11.4	13.7
4736200	24ACB342A30	CNPH*4221A**	59*N*A100V21**20	39,500	11.5	14.0
4736201	24ACB342A30	CNPH*4221A**	59*N*A120V24**22	39,500	11.8	14.2
4736202	24ACB342A30	CNPH*4221A**	59*P5A060E17**14	40,000	11.2	13.5
4736203	24ACB342A30	CNPH*4221A**	59*P5A080E17**16	40,000	11.2	13.5
4736204	24ACB342A30	CNPH*4221A**	59*P5A100E21**16	39,500	11.4	13.7
4736205	24ACB342A30	CNPH*4221A**	59*P5A120E24**22	40,000	11.5	14.0
4130840	24ACB342A30	CNPH*4221A**	OVLAAB048112	40,000	11.0	13.2
4130841	24ACB342A30	CNPH*4221A**	OVLAAB060154	41,000	11.5	13.5
4130839	24ACB342A30	CNPH*4221A**	OVMAAB042112	40,000	11.0	13.2
3045479	24ACB342A30	CNPH*4221A**+TDR		41,000	11.0	13.0
3690718	24ACB342A30	CNPH*4321A**	58CV(A,X)070−12	41,500	11.5	14.0
3690719	24ACB342A30	CNPH*4321A**	58CV(A,X)090−16	41,500	12.0	14.5
3690720	24ACB342A30	CNPH*4321A**	58CV(A,X)110−20	41,500	12.0	14.5
3690721	24ACB342A30	CNPH*4321A**	58CV(A,X)135−22	41,500	12.0	14.5
3690722	24ACB342A30	CNPH*4321A**	58CV(A,X)155−22	41,500	12.0	14.5
3690733	24ACB342A30	CNPH*4321A**	58HDV060−−12	41,500	11.0	13.5
3690734	24ACB342A30	CNPH*4321A**	58HDV080−−20	41,500	11.5	14.0
3690735	24ACB342A30	CNPH*4321A**	58HDV100−−20	41,500	11.5	14.0
3690728	24ACB342A30	CNPH*4321A**	58ME(B,C)060−12	41,500	11.5	14.0
3690729	24ACB342A30	CNPH*4321A**	58ME(B,C)080−12	41,500	11.5	14.0
3690730	24ACB342A30	CNPH*4321A**	58ME(B,C)080−16	41,500	12.0	14.5
3690731	24ACB342A30	CNPH*4321A**	58ME(B,C)100−20	41,500	12.0	14.5
3690732	24ACB342A30	CNPH*4321A**	58ME(B,C)120−20	41,500	12.0	14.5
3690727	24ACB342A30	CNPH*4321A**	58MEB040−12	41,500	11.5	14.0
3690713	24ACB342A30	CNPH*4321A**	58MV(B,C)060−14	41,500	11.5	14.0
3690714	24ACB342A30	CNPH*4321A**	58MV(B,C)080−14	41,500	11.5	14.0
3690715	24ACB342A30	CNPH*4321A**	58MV(B,C)080−20	41,500	11.5	14.0
3690716	24ACB342A30	CNPH*4321A**	58MV(B,C)100−20	41,500	11.5	14.0
3690717	24ACB342A30	CNPH*4321A**	58MV(B,C)120−20	41,500	11.5	14.0
3690712	24ACB342A30	CNPH*4321A**	58MVB040−14	41,500	11.5	14.0
3690723	24ACB342A30	CNPH*4321A**	58PH*070−16	41,500	11.0	13.5
3690724	24ACB342A30	CNPH*4321A**	58PH*090−16	41,500	12.0	14.5
3690725	24ACB342A30	CNPH*4321A**	58PH*110−20	41,500	12.0	14.5
3690726	24ACB342A30	CNPH*4321A**	58PH*135−20	41,500	12.0	14.5
4130843	24ACB342A30	CNPH*4321A**	58VLR120−20	41,000	12.0	14.0
4130842	24ACB342A30	CNPH*4321A**	58VMR120−20	41,000	12.0	14.0
4736206	24ACB342A30	CNPH*4321A**	59*N*A060V17**14	40,500	11.5	14.0
4736207	24ACB342A30	CNPH*4321A**	59*N*A080V17**14	41,000	11.8	14.2
4736208	24ACB342A30	CNPH*4321A**	59*N*A100V21**20	41,000	11.8	14.2
4736209	24ACB342A30	CNPH*4321A**	59*N*A120V24**22	41,000	12.0	14.5
4736210	24ACB342A30	CNPH*4321A**	59*P5A060E17**14	41,000	11.5	14.0
4736211	24ACB342A30	CNPH*4321A**	59*P5A080E17**16	41,500	11.5	14.0
4736212	24ACB342A30	CNPH*4321A**	59*P5A100E21**16	41,000	11.8	14.2
4736213	24ACB342A30	CNPH*4321A**	59*P5A120E24**22	41,500	12.0	14.5
4130845	24ACB342A30	CNPH*4321A**	OVLAAB048112	41,500	11.5	13.5
4130846	24ACB342A30	CNPH*4321A**	OVLAAB060154	41,500	11.7	14.0
4130844	24ACB342A30	CNPH*4321A**	OVMAAB042112	41,000	11.7	13.5
3690711	24ACB342A30	CNPH*4321A**+TDR		41,500	11.0	13.0
3045484	24ACB342A30	CNPH*4821A**	58CV(A,X)070−12	41,000	11.2	13.5
4130874	24ACB342A30	CNPH*4821A**	58HDV060−−12	41,000	11.0	13.2
4130875	24ACB342A30	CNPH*4821A**	58HDV080−−20	41,500	11.7	13.5
4130876	24ACB342A30	CNPH*4821A**	58HDV100−−20	41,000	11.7	14.0
3613001	24ACB342A30	CNPH*4821A**	58ME(B,C)040−12	41,000	11.7	14.0
3101588	24ACB342A30	CNPH*4821A**	58ME(B,C)060−12	41,000	11.7	13.5
3101589	24ACB342A30	CNPH*4821A**	58ME(B,C)080−12	41,000	12.0	14.0
3101590	24ACB342A30	CNPH*4821A**	58ME(B,C)080−16	41,000	12.0	14.0
3101591	24ACB342A30	CNPH*4821A**	58ME(B,C)100−20	41,000	12.0	14.0
3101592	24ACB342A30	CNPH*4821A**	58ME(B,C)120−20	41,000	12.2	14.5
3101587	24ACB342A30	CNPH*4821A**	58MEB040−12	41,000	11.7	14.0
3045444	24ACB342A30	CNPH*4821A**	58PH*070−16	41,000	11.5	13.5
3045445	24ACB342A30	CNPH*4821A**	58PH*090−16	41,000	12.0	14.0
3045446	24ACB342A30	CNPH*4821A**	58PH*110−20	41,000	12.0	14.0
3045447	24ACB342A30	CNPH*4821A**	58PH*135−20	41,000	12.0	14.0
4130848	24ACB342A30	CNPH*4821A**	58VLR120−20	40,500	12.0	14.0
4130847	24ACB342A30	CNPH*4821A**	58VMR120−20	40,500	11.7	14.0
4736214	24ACB342A30	CNPH*4821A**	59*N*A060V17**14	40,000	11.4	13.7
4736215	24ACB342A30	CNPH*4821A**	59*N*A080V17**14	40,500	11.5	14.0

See notes on page 45

COMBINATION RATINGS CONTINUED

AHRI Ref. No.	Model Number	Indoor Model	Furnace Model	Capacity	EER	SEER
4736216	24ACB342A30	CNPH*4821A**	59*N*A100V21**20	40,500	11.8	14.2
4736217	24ACB342A30	CNPH*4821A**	59*N*A120V24**22	40,500	12.0	14.5
4736218	24ACB342A30	CNPH*4821A**	59*P5A060E17**14	40,500	11.4	13.7
4736219	24ACB342A30	CNPH*4821A**	59*P5A080E17**16	41,000	11.4	13.7
4736220	24ACB342A30	CNPH*4821A**	59*P5A100E21**16	40,500	11.8	14.2
4736221	24ACB342A30	CNPH*4821A**	59*P5A120E24**22	41,000	11.8	14.2
4130850	24ACB342A30	CNPH*4821A**	OVLAAB048112	41,000	11.5	13.5
4130851	24ACB342A30	CNPH*4821A**	OVLAAB060154	41,500	11.7	13.5
4130849	24ACB342A30	CNPH*4821A**	OVMAAB042112	40,500	11.7	13.5
3045482	24ACB342A30	CNPH*4821A**+TDR		41,500	11.0	13.2
4130862	24ACB342A30	CNPV*4217A**	58HDV060−−12	40,500	11.0	13.2
3612999	24ACB342A30	CNPV*4217A**	58ME(B,C)040−12	40,500	11.7	13.5
3101575	24ACB342A30	CNPV*4217A**	58ME(B,C)060−12	40,500	11.7	13.5
3101576	24ACB342A30	CNPV*4217A**	58ME(B,C)080−12	40,500	11.7	13.5
3101577	24ACB342A30	CNPV*4217A**	58ME(B,C)080−16	40,500	11.7	13.5
3101574	24ACB342A30	CNPV*4217A**	58MEB040−12	40,500	11.7	13.5
4736174	24ACB342A30	CNPV*4217A**	59*N*A060V17**14	40,000	11.4	13.7
4736175	24ACB342A30	CNPV*4217A**	59*N*A080V17**14	40,000	11.4	13.7
4736176	24ACB342A30	CNPV*4217A**	59*P5A060E17**14	40,000	11.4	13.7
4736177	24ACB342A30	CNPV*4217A**	59*P5A080E17**16	40,000	11.4	13.7
4130830	24ACB342A30	CNPV*4217A**	OVMAAB042112	40,000	11.0	13.5
3045472	24ACB342A30	CNPV*4221A**	58CV(A,X)110−20	40,000	11.5	14.0
4130863	24ACB342A30	CNPV*4221A**	58HDV060−−12	40,000	11.0	13.2
4130864	24ACB342A30	CNPV*4221A**	58HDV080−−20	40,500	11.0	13.5
3101578	24ACB342A30	CNPV*4221A**	58ME(B,C)100−20	40,500	12.0	14.0
3045471	24ACB342A30	CNPV*4221A**	58MV(B,C)080−14	40,000	11.2	13.5
3395184	24ACB342A30	CNPV*4221A**	58MV(B,C)100−20	39,500	11.5	13.5
3045435	24ACB342A30	CNPV*4221A**	58PH*090−16	40,500	11.7	14.0
3045436	24ACB342A30	CNPV*4221A**	58PH*110−20	40,500	11.7	14.0
3756771	24ACB342A30	CNPV*4221A**	58UVB080−14	40,000	11.2	13.5
3756993	24ACB342A30	CNPV*4221A**	58UVB100−20	39,500	11.5	13.5
4130832	24ACB342A30	CNPV*4221A**	58VLR120−20	40,000	11.7	13.5
4130831	24ACB342A30	CNPV*4221A**	58VMR120−20	40,000	11.5	13.5
4736178	24ACB342A30	CNPV*4221A**	59*N*A060V17**14	39,500	11.2	13.5
4736179	24ACB342A30	CNPV*4221A**	59*N*A080V17**14	39,500	11.4	13.7
4736180	24ACB342A30	CNPV*4221A**	59*N*A100V21**20	39,500	11.5	14.0
4736181	24ACB342A30	CNPV*4221A**	59*P5A060E17**14	40,000	11.2	13.5
4736182	24ACB342A30	CNPV*4221A**	59*P5A080E17**16	40,000	11.2	13.5
4736183	24ACB342A30	CNPV*4221A**	59*P5A100E21**16	39,500	11.4	13.7
4130833	24ACB342A30	CNPV*4221A**	OVLAAB048112	40,000	11.0	13.2
3045470	24ACB342A30	CNPV*4221A**+TDR		41,000	11.0	13.0
3690706	24ACB342A30	CNPV*4324A**	58CV(A,X)135−22	41,500	12.0	14.5
3690707	24ACB342A30	CNPV*4324A**	58CV(A,X)155−22	41,500	12.0	14.5
4130865	24ACB342A30	CNPV*4324A**	58HDV080−−20	41,500	11.7	14.0
4130866	24ACB342A30	CNPV*4324A**	58HDV100−−20	41,500	12.0	14.0
3690710	24ACB342A30	CNPV*4324A**	58HDV100−−20 (DWNFLW ONLY)	41,500	12.0	14.5
3690709	24ACB342A30	CNPV*4324A**	58ME(B,C)120−20	41,500	12.0	14.5
3690705	24ACB342A30	CNPV*4324A**	58MV(B,C)120−20	41,500	12.0	14.5
3690704	24ACB342A30	CNPV*4324A**	58MVB040−14	41,500	11.5	14.0
3690708	24ACB342A30	CNPV*4324A**	58PH*135−20	41,500	12.0	14.5
3690885	24ACB342A30	CNPV*4324A**	58UVB120−20	41,500	12.0	14.5
4736184	24ACB342A30	CNPV*4324A**	59*N*A100V21**20	41,000	12.0	14.5
4736185	24ACB342A30	CNPV*4324A**	59*N*A120V24**22	41,000	12.0	14.5
4736186	24ACB342A30	CNPV*4324A**	59*P5A100E21**16	41,500	11.8	14.2
4736187	24ACB342A30	CNPV*4324A**	59*P5A120E24**22	42,000	12.0	14.5
3690703	24ACB342A30	CNPV*4324A**+TDR		41,500	11.0	13.0
3045475	24ACB342A30	CNPV*4821A**	58CV(A,X)110−20	41,000	11.5	14.0
4130867	24ACB342A30	CNPV*4821A**	58HDV060−−12	41,000	11.0	13.2
4130868	24ACB342A30	CNPV*4821A**	58HDV080−−20	41,500	11.7	13.5
3101579	24ACB342A30	CNPV*4821A**	58ME(B,C)100−20	41,000	12.0	14.0
3045474	24ACB342A30	CNPV*4821A**	58MV(B,C)080−14	40,500	11.2	13.5
3245208	24ACB342A30	CNPV*4821A**	58MV(B,C)100−20	40,500	11.5	14.0
3045437	24ACB342A30	CNPV*4821A**	58PH*090−16	41,000	12.0	14.0
3045438	24ACB342A30	CNPV*4821A**	58PH*110−20	41,000	12.0	14.0
3756772	24ACB342A30	CNPV*4821A**	58UVB080−14	40,500	11.2	13.5
3756835	24ACB342A30	CNPV*4821A**	58UVB100−20	40,500	11.5	14.0
4130835	24ACB342A30	CNPV*4821A**	58VLR120−20	40,500	12.0	14.0
4130834	24ACB342A30	CNPV*4821A**	58VMR120−20	40,500	11.7	14.0
4736188	24ACB342A30	CNPV*4821A**	59*N*A060V17**14	40,000	11.4	13.7
4736189	24ACB342A30	CNPV*4821A**	59*N*A080V17**14	40,500	11.5	14.0
4736190	24ACB342A30	CNPV*4821A**	59*N*A100V21**20	40,500	11.8	14.2
4736191	24ACB342A30	CNPV*4821A**	59*P5A060E17**14	40,500	11.4	13.7
4736192	24ACB342A30	CNPV*4821A**	59*P5A080E17**16	41,000	11.4	13.7
4736193	24ACB342A30	CNPV*4821A**	59*P5A100E21**16	40,500	11.8	14.2
4130836	24ACB342A30	CNPV*4821A**	OVLAAB048112	41,000	11.5	13.5
3045473	24ACB342A30	CNPV*4821A**+TDR		40,500	11.0	13.2
3045478	24ACB342A30	CNPV*4824A**	58CV(A,X)135−22	40,500	11.7	14.5
4130869	24ACB342A30	CNPV*4824A**	58HDV080−−20	41,500	11.7	13.5

See notes on page 45

COMBINATION RATINGS CONTINUED

AHRI Ref. No.	Model Number	Indoor Model	Furnace Model	Capacity	EER	SEER
4130870	24ACB342A30	CNPV*4824A**	58HDV100−−20	41,000	11.7	14.0
3101580	24ACB342A30	CNPV*4824A**	58ME(B,C)120−20	41,000	12.2	14.5
3045439	24ACB342A30	CNPV*4824A**	58PH*135−20	41,000	12.0	14.0
4736194	24ACB342A30	CNPV*4824A**	59*N*A100V21**20	40,500	11.8	14.2
4736195	24ACB342A30	CNPV*4824A**	59*N*A120V24**22	40,500	12.0	14.5
4736196	24ACB342A30	CNPV*4824A**	59*P5A100E21**16	40,500	11.8	14.2
4736197	24ACB342A30	CNPV*4824A**	59*P5A120E24**22	41,000	11.8	14.2
3045476	24ACB342A30	CNPV*4824A**+TDR		41,500	11.0	13.2
3045488	24ACB342A30	CSPH*4212A**	58CV(A,X)070−12	40,000	11.2	13.5
3690736	24ACB342A30	CSPH*4212A**	58HDV060−−12	41,500	11.0	13.5
3690737	24ACB342A30	CSPH*4212A**	58HDV080−−20	41,500	11.5	14.0
3690738	24ACB342A30	CSPH*4212A**	58HDV100−−20	41,500	11.5	14.0
3613002	24ACB342A30	CSPH*4212A**	58ME(B,C)040−12	40,500	11.7	13.5
3101594	24ACB342A30	CSPH*4212A**	58ME(B,C)060−12	40,500	11.7	13.5
3101595	24ACB342A30	CSPH*4212A**	58ME(B,C)080−12	40,500	11.7	13.5
3101596	24ACB342A30	CSPH*4212A**	58ME(B,C)080−16	40,500	11.7	13.5
3101597	24ACB342A30	CSPH*4212A**	58ME(B,C)100−20	40,500	12.0	14.0
3101598	24ACB342A30	CSPH*4212A**	58ME(B,C)120−20	40,500	12.0	14.0
3101593	24ACB342A30	CSPH*4212A**	58MEB040−12	40,500	11.7	13.5
3045448	24ACB342A30	CSPH*4212A**	58PH*070−16	41,000	11.5	13.5
3045449	24ACB342A30	CSPH*4212A**	58PH*090−16	41,000	12.0	14.0
3045450	24ACB342A30	CSPH*4212A**	58PH*110−20	41,000	12.0	14.0
3045451	24ACB342A30	CSPH*4212A**	58PH*135−20	41,000	12.0	14.0
4130853	24ACB342A30	CSPH*4212A**	58VLR120−20	41,000	12.0	14.0
4130852	24ACB342A30	CSPH*4212A**	58VMR120−20	40,500	11.7	14.0
4736222	24ACB342A30	CSPH*4212A**	59*N*A060V17**14	40,500	11.4	13.7
4736223	24ACB342A30	CSPH*4212A**	59*N*A080V17**14	40,500	11.5	14.0
4736224	24ACB342A30	CSPH*4212A**	59*N*A100V21**20	40,500	11.8	14.2
4736225	24ACB342A30	CSPH*4212A**	59*N*A120V24**22	40,500	12.0	14.5
4736226	24ACB342A30	CSPH*4212A**	59*P5A060E17**14	40,500	11.4	13.7
4736227	24ACB342A30	CSPH*4212A**	59*P5A080E17**16	41,000	11.4	13.7
4736228	24ACB342A30	CSPH*4212A**	59*P5A100E21**16	40,500	11.5	14.0
4736229	24ACB342A30	CSPH*4212A**	59*P5A120E24**22	41,000	11.8	14.2
4130855	24ACB342A30	CSPH*4212A**	OVLAAB048112	41,000	11.0	13.5
4130856	24ACB342A30	CSPH*4212A**	OVLAAB060154	41,500	11.7	13.5
4130854	24ACB342A30	CSPH*4212A**	OVMAAB042112	41,000	11.5	13.5
3045486	24ACB342A30	CSPH*4212A**+TDR		40,500	11.0	13.2
3045491	24ACB342A30	CSPH*4812A**	58CV(A,X)070−12	40,000	11.2	13.5
3690739	24ACB342A30	CSPH*4812A**	58HDV060−−12	41,500	11.0	13.5
3690740	24ACB342A30	CSPH*4812A**	58HDV080−−20	41,500	11.5	14.0
3690741	24ACB342A30	CSPH*4812A**	58HDV100−−20	41,500	11.5	14.0
3613003	24ACB342A30	CSPH*4812A**	58ME(B,C)040−12	41,000	12.0	14.0
3101600	24ACB342A30	CSPH*4812A**	58ME(B,C)060−12	41,000	11.7	13.5
3101601	24ACB342A30	CSPH*4812A**	58ME(B,C)080−12	41,000	12.0	14.0
3101602	24ACB342A30	CSPH*4812A**	58ME(B,C)080−16	41,000	12.0	14.0
3101603	24ACB342A30	CSPH*4812A**	58ME(B,C)100−20	41,000	12.0	14.0
3101604	24ACB342A30	CSPH*4812A**	58ME(B,C)120−20	41,000	12.2	14.5
3101599	24ACB342A30	CSPH*4812A**	58MEB040−12	41,000	12.0	14.0
3045452	24ACB342A30	CSPH*4812A**	58PH*070−16	41,000	11.5	13.5
3045453	24ACB342A30	CSPH*4812A**	58PH*090−16	41,500	12.0	14.0
3045454	24ACB342A30	CSPH*4812A**	58PH*110−20	41,500	12.0	14.0
3045455	24ACB342A30	CSPH*4812A**	58PH*135−20	41,500	12.0	14.0
4130858	24ACB342A30	CSPH*4812A**	58VLR120−20	41,000	12.0	14.0
4130857	24ACB342A30	CSPH*4812A**	58VMR120−20	41,000	11.7	14.0
4736230	24ACB342A30	CSPH*4812A**	59*N*A060V17**14	40,500	11.4	13.7
4736231	24ACB342A30	CSPH*4812A**	59*N*A080V17**14	40,500	11.5	14.0
4736232	24ACB342A30	CSPH*4812A**	59*N*A100V21**20	40,500	11.8	14.2
4736233	24ACB342A30	CSPH*4812A**	59*N*A120V24**22	40,500	12.0	14.5
4736234	24ACB342A30	CSPH*4812A**	59*P5A060E17**14	41,000	11.4	13.7
4736235	24ACB342A30	CSPH*4812A**	59*P5A080E17**16	41,000	11.4	13.7
4736236	24ACB342A30	CSPH*4812A**	59*P5A100E21**16	41,000	11.8	14.2
4736237	24ACB342A30	CSPH*4812A**	59*P5A120E24**22	41,500	11.8	14.2
4130860	24ACB342A30	CSPH*4812A**	OVLAAB048112	41,000	11.5	13.5
4130861	24ACB342A30	CSPH*4812A**	OVLAAB060154	41,500	11.7	13.5
4130859	24ACB342A30	CSPH*4812A**	OVMAAB042112	41,000	11.5	13.5
3045489	24ACB342A30	CSPH*4812A**+TDR		41,000	11.0	13.2
3850739	24ACB342A30	FB4CNF042		41,000	11.0	13.0
4208593	24ACB342A30	FB4CNF042+TXV		41,000	11.0	13.5
3850740	24ACB342A30	FB4CNF048		41,000	11.0	13.0
4208594	24ACB342A30	FB4CNF048+TXV		41,000	11.0	13.5
3045496	24ACB342A30	FE4AN(B,F)003+UI		40,500	11.5	14.0
3045497	24ACB342A30	FE4AN(B,F)005+UI		42,000	11.7	14.5
3045498	24ACB342A30	FE4ANB006+UI		42,500	12.0	15.0
3404522	24ACB342A30	FV4CN(B,F)003		40,500	11.5	14.0
3404523	24ACB342A30	FV4CN(B,F)005		41,500	11.7	14.5
3404524	24ACB342A30	FV4CNB006		42,500	12.0	15.0
3752082	24ACB342A30	FX4DN(B,F)043		41,500	11.5	14.0
3752083	24ACB342A30	FX4DN(B,F)049		42,000	12.0	14.5
3752084	24ACB342A30	FX4DN(B,F)061		42,500	12.0	14.5

See notes on page 45

COMBINATION RATINGS CONTINUED

AHRI Ref. No.	Model Number	Indoor Model	Furnace Model	Capacity	EER	SEER
3850741	24ACB342A30	FY5BNF042		41,000	11.0	13.0
4208595	24ACB342A30	FY5BNF042+TXV		41,000	11.0	13.0
3850742	24ACB342A30	FY5BNF048		41,000	11.0	13.0
4208596	24ACB342A30	FY5BNF048+TXV		41,000	11.0	13.0
3046309	24ACB342A50	†CAP**4221A**+TDR		41,000	11.0	13.0
3046339	24ACB342A50	CAP**4221A**	58CV(A,X)110−20	40,500	11.2	13.5
3124023	24ACB342A50	CAP**4221A**	58ME(B,C)100−20	40,500	12.0	14.0
3046338	24ACB342A50	CAP**4221A**	58MV(B,C)080−14	40,000	11.2	13.5
3046310	24ACB342A50	CAP**4221A**	58PH*090−16	40,500	11.7	14.0
3046311	24ACB342A50	CAP**4221A**	58PH*110−20	40,500	12.0	14.0
3673156	24ACB342A50	CAP**4221A**	58UVB080−14	40,000	11.2	13.5
3046342	24ACB342A50	CAP**4224A**	58CV(A,X)135−22	40,500	11.5	14.0
3124024	24ACB342A50	CAP**4224A**	58ME(B,C)120−20	40,500	12.0	14.0
3046312	24ACB342A50	CAP**4224A**	58PH*135−20	40,500	11.7	14.0
3046340	24ACB342A50	CAP**4224A**+TDR		41,000	11.0	13.0
3046345	24ACB342A50	CAP**4817A**	58CV(A,X)090−16	40,000	11.5	14.0
3613210	24ACB342A50	CAP**4817A**	58ME(B,C)040−12	41,000	11.7	14.0
3124026	24ACB342A50	CAP**4817A**	58ME(B,C)060−12	41,000	11.7	13.5
3124027	24ACB342A50	CAP**4817A**	58ME(B,C)080−12	41,000	12.0	14.0
3124028	24ACB342A50	CAP**4817A**	58ME(B,C)080−16	41,000	12.0	14.0
3124025	24ACB342A50	CAP**4817A**	58MEB040−12	41,000	11.7	14.0
3046344	24ACB342A50	CAP**4817A**	58MV(B,C)060−14	40,000	11.5	14.0
3046313	24ACB342A50	CAP**4817A**	58PH*070−16	41,000	11.5	13.5
3673157	24ACB342A50	CAP**4817A**	58UVB060−14	40,000	11.5	14.0
3046343	24ACB342A50	CAP**4817A**+TDR		40,000	11.0	13.2
3046348	24ACB342A50	CAP**4821A**	58CV(A,X)110−20	41,000	11.5	14.0
3124029	24ACB342A50	CAP**4821A**	58ME(B,C)100−20	41,000	12.0	14.0
3046347	24ACB342A50	CAP**4821A**	58MV(B,C)080−14	40,500	11.2	13.5
3046314	24ACB342A50	CAP**4821A**	58PH*090−16	41,000	12.0	14.0
3046315	24ACB342A50	CAP**4821A**	58PH*110−20	41,000	12.0	14.0
3673158	24ACB342A50	CAP**4821A**	58UVB080−14	40,500	11.2	13.5
3046346	24ACB342A50	CAP**4821A**+TDR		41,500	11.0	13.2
3046351	24ACB342A50	CAP**4824A**	58CV(A,X)135−22	41,000	11.7	14.5
3124030	24ACB342A50	CAP**4824A**	58ME(B,C)120−20	41,000	12.2	14.5
3046316	24ACB342A50	CAP**4824A**	58PH*135−20	41,000	12.0	14.0
3046349	24ACB342A50	CAP**4824A**+TDR		41,500	11.0	13.2
3046363	24ACB342A50	CNPH*4221A**	58CV(A,X)070−12	40,500	11.2	13.5
3613212	24ACB342A50	CNPH*4221A**	58ME(B,C)040−12	40,500	11.7	13.5
3124039	24ACB342A50	CNPH*4221A**	58ME(B,C)060−12	40,500	11.5	13.5
3124040	24ACB342A50	CNPH*4221A**	58ME(B,C)080−12	40,500	11.7	13.5
3124041	24ACB342A50	CNPH*4221A**	58ME(B,C)080−16	40,000	11.7	13.5
3124042	24ACB342A50	CNPH*4221A**	58ME(B,C)100−20	40,500	12.0	14.0
3124043	24ACB342A50	CNPH*4221A**	58ME(B,C)120−20	40,500	12.0	14.0
3124038	24ACB342A50	CNPH*4221A**	58MEB040−12	40,500	11.7	13.5
3046322	24ACB342A50	CNPH*4221A**	58PH*070−16	40,000	11.0	13.0
3046323	24ACB342A50	CNPH*4221A**	58PH*090−16	40,500	11.7	14.0
3046324	24ACB342A50	CNPH*4221A**	58PH*110−20	40,500	11.7	14.0
3046325	24ACB342A50	CNPH*4221A**	58PH*135−20	40,500	11.7	14.0
3046361	24ACB342A50	CNPH*4221A**+TDR		41,000	11.0	13.0
3046366	24ACB342A50	CNPH*4821A**	58CV(A,X)070−12	41,000	11.2	13.5
3613213	24ACB342A50	CNPH*4821A**	58ME(B,C)040−12	41,000	11.7	14.0
3124045	24ACB342A50	CNPH*4821A**	58ME(B,C)060−12	41,000	11.7	13.5
3124046	24ACB342A50	CNPH*4821A**	58ME(B,C)080−12	41,000	12.0	14.0
3124047	24ACB342A50	CNPH*4821A**	58ME(B,C)080−16	41,000	12.0	14.0
3124048	24ACB342A50	CNPH*4821A**	58ME(B,C)100−20	41,000	12.0	14.0
3124049	24ACB342A50	CNPH*4821A**	58ME(B,C)120−20	41,000	12.2	14.5
3124044	24ACB342A50	CNPH*4821A**	58MEB040−12	41,000	11.7	14.0
3046326	24ACB342A50	CNPH*4821A**	58PH*070−16	41,000	11.5	13.5
3046327	24ACB342A50	CNPH*4821A**	58PH*090−16	41,000	12.0	14.0
3046328	24ACB342A50	CNPH*4821A**	58PH*110−20	41,000	12.0	14.0
3046329	24ACB342A50	CNPH*4821A**	58PH*135−20	41,000	12.0	14.0
3046364	24ACB342A50	CNPH*4821A**+TDR		41,500	11.0	13.2
3613211	24ACB342A50	CNPV*4217A**	58ME(B,C)040−12	40,500	11.7	13.5
3124032	24ACB342A50	CNPV*4217A**	58ME(B,C)060−12	40,500	11.7	13.5
3124033	24ACB342A50	CNPV*4217A**	58ME(B,C)080−12	40,500	11.7	13.5
3124034	24ACB342A50	CNPV*4217A**	58ME(B,C)080−16	40,500	11.7	13.5
3124031	24ACB342A50	CNPV*4217A**	58MEB040−12	40,500	11.7	13.5
3046354	24ACB342A50	CNPV*4221A**	58CV(A,X)110−20	40,000	11.5	14.0
3124035	24ACB342A50	CNPV*4221A**	58ME(B,C)100−20	40,500	12.0	14.0
3046353	24ACB342A50	CNPV*4221A**	58MV(B,C)080−14	40,000	11.2	13.5
3046317	24ACB342A50	CNPV*4221A**	58PH*090−16	40,500	11.7	14.0
3046318	24ACB342A50	CNPV*4221A**	58PH*110−20	40,500	11.7	14.0
3756789	24ACB342A50	CNPV*4221A**	58UVB080−14	40,000	11.2	13.5
3046352	24ACB342A50	CNPV*4221A**+TDR		41,000	11.0	13.0
3046357	24ACB342A50	CNPV*4821A**	58CV(A,X)110−20	41,000	11.5	14.0
3124036	24ACB342A50	CNPV*4821A**	58ME(B,C)100−20	41,000	12.0	14.0
3046356	24ACB342A50	CNPV*4821A**	58MV(B,C)080−14	40,500	11.2	13.5
3046319	24ACB342A50	CNPV*4821A**	58PH*090−16	41,000	12.0	14.0
3046320	24ACB342A50	CNPV*4821A**	58PH*110−20	41,000	12.0	14.0

See notes on page 45

COMBINATION RATINGS CONTINUED

AHRI Ref. No.	Model Number	Indoor Model	Furnace Model	Capacity	EER	SEER
3756790	24ACB342A50	CNPV*4821A**	58UVB080−14	40,500	11.2	13.5
3046355	24ACB342A50	CNPV*4821A**+TDR		40,500	11.0	13.2
3046360	24ACB342A50	CNPV*4824A**	58CV(A,X)135−22	40,500	11.7	14.5
3124037	24ACB342A50	CNPV*4824A**	58ME(B,C)120−20	41,000	12.2	14.5
3046321	24ACB342A50	CNPV*4824A**	58PH*135−20	41,000	12.0	14.0
3046358	24ACB342A50	CNPV*4824A**+TDR		41,500	11.0	13.2
3046370	24ACB342A50	CSPH*4212A**	58CV(A,X)070−12	40,000	11.2	13.5
3613214	24ACB342A50	CSPH*4212A**	58ME(B,C)040−12	40,500	11.7	13.5
3124051	24ACB342A50	CSPH*4212A**	58ME(B,C)060−12	40,500	11.7	13.5
3124052	24ACB342A50	CSPH*4212A**	58ME(B,C)080−12	40,500	11.7	13.5
3124053	24ACB342A50	CSPH*4212A**	58ME(B,C)080−16	40,500	11.7	13.5
3124054	24ACB342A50	CSPH*4212A**	58ME(B,C)100−20	40,500	12.0	14.0
3124055	24ACB342A50	CSPH*4212A**	58ME(B,C)120−20	40,500	12.0	14.0
3124050	24ACB342A50	CSPH*4212A**	58MEB040−12	40,500	11.7	13.5
3046330	24ACB342A50	CSPH*4212A**	58PH*070−16	41,000	11.5	13.5
3046331	24ACB342A50	CSPH*4212A**	58PH*090−16	41,000	12.0	14.0
3046332	24ACB342A50	CSPH*4212A**	58PH*110−20	41,000	12.0	14.0
3046333	24ACB342A50	CSPH*4212A**	58PH*135−20	41,000	12.0	14.0
3046368	24ACB342A50	CSPH*4212A**+TDR		40,500	11.0	13.2
3046373	24ACB342A50	CSPH*4812A**	58CV(A,X)070−12	40,000	11.2	13.5
3613215	24ACB342A50	CSPH*4812A**	58ME(B,C)040−12	41,000	12.0	14.0
3124057	24ACB342A50	CSPH*4812A**	58ME(B,C)060−12	41,000	11.7	13.5
3124058	24ACB342A50	CSPH*4812A**	58ME(B,C)080−12	41,000	12.0	14.0
3124059	24ACB342A50	CSPH*4812A**	58ME(B,C)080−16	41,000	12.0	14.0
3124060	24ACB342A50	CSPH*4812A**	58ME(B,C)100−20	41,000	12.0	14.0
3124061	24ACB342A50	CSPH*4812A**	58ME(B,C)120−20	41,000	12.2	14.5
3124056	24ACB342A50	CSPH*4812A**	58MEB040−12	41,000	12.0	14.0
3046334	24ACB342A50	CSPH*4812A**	58PH*070−16	41,000	11.5	13.5
3046335	24ACB342A50	CSPH*4812A**	58PH*090−16	41,500	12.0	14.0
3046336	24ACB342A50	CSPH*4812A**	58PH*110−20	41,500	12.0	14.0
3046337	24ACB342A50	CSPH*4812A**	58PH*135−20	41,500	12.0	14.0
3046371	24ACB342A50	CSPH*4812A**+TDR		41,000	11.0	13.2
4208619	24ACB342A50	FB4CNF042		41,000	11.0	13.0
4208620	24ACB342A50	FB4CNF042+TXV		41,000	11.0	13.5
4208621	24ACB342A50	FB4CNF048		41,000	11.0	13.0
4208622	24ACB342A50	FB4CNF048+TXV		41,000	11.0	13.5
3046378	24ACB342A50	FE4AN(B,F)003+UI		40,500	11.5	14.0
3046379	24ACB342A50	FE4AN(B,F)005+UI		42,000	11.7	14.5
3046380	24ACB342A50	FE4ANB006+UI		42,500	12.0	15.0
3404538	24ACB342A50	FV4CN(B,F)003		40,500	11.5	14.0
3404539	24ACB342A50	FV4CN(B,F)005		41,500	11.7	14.5
3404540	24ACB342A50	FV4CNB006		42,500	12.0	15.0
4208623	24ACB342A50	FY5BNF042		41,000	11.0	13.0
4208624	24ACB342A50	FY5BNF042+TXV		41,000	11.0	13.0
4208625	24ACB342A50	FY5BNF048		41,000	11.0	13.0
4208626	24ACB342A50	FY5BNF048+TXV		41,000	11.0	13.0
3046384	24ACB342A60	†CAP**4221A**+TDR		41,000	11.0	13.0
3046414	24ACB342A60	CAP**4221A**	58CV(A,X)110−20	40,500	11.2	13.5
3124127	24ACB342A60	CAP**4221A**	58ME(B,C)100−20	40,500	12.0	14.0
3046413	24ACB342A60	CAP**4221A**	58MV(B,C)080−14	40,000	11.2	13.5
3046385	24ACB342A60	CAP**4221A**	58PH*090−16	40,500	11.7	14.0
3046386	24ACB342A60	CAP**4221A**	58PH*110−20	40,500	12.0	14.0
3673159	24ACB342A60	CAP**4221A**	58UVB080−14	40,000	11.2	13.5
3046417	24ACB342A60	CAP**4224A**	58CV(A,X)135−22	40,500	11.5	14.0
3124128	24ACB342A60	CAP**4224A**	58ME(B,C)120−20	40,500	12.0	14.0
3046387	24ACB342A60	CAP**4224A**	58PH*135−20	40,500	11.7	14.0
3046415	24ACB342A60	CAP**4224A**+TDR		41,000	11.0	13.0
3046420	24ACB342A60	CAP**4817A**	58CV(A,X)090−16	40,000	11.5	14.0
3613223	24ACB342A60	CAP**4817A**	58ME(B,C)040−12	41,000	11.7	14.0
3124130	24ACB342A60	CAP**4817A**	58ME(B,C)060−12	41,000	11.7	13.5
3124131	24ACB342A60	CAP**4817A**	58ME(B,C)080−12	41,000	12.0	14.0
3124132	24ACB342A60	CAP**4817A**	58ME(B,C)080−16	41,000	12.0	14.0
3124129	24ACB342A60	CAP**4817A**	58MEB040−12	41,000	11.7	14.0
3046419	24ACB342A60	CAP**4817A**	58MV(B,C)060−14	40,000	11.5	14.0
3046388	24ACB342A60	CAP**4817A**	58PH*070−16	41,000	11.5	13.5
3673160	24ACB342A60	CAP**4817A**	58UVB060−14	40,000	11.5	14.0
3046418	24ACB342A60	CAP**4817A**+TDR		40,000	11.0	13.2
3046423	24ACB342A60	CAP**4821A**	58CV(A,X)110−20	41,000	11.5	14.0
3124133	24ACB342A60	CAP**4821A**	58ME(B,C)100−20	41,000	12.0	14.0
3046422	24ACB342A60	CAP**4821A**	58MV(B,C)080−14	40,500	11.2	13.5
3046389	24ACB342A60	CAP**4821A**	58PH*090−16	41,000	12.0	14.0
3046390	24ACB342A60	CAP**4821A**	58PH*110−20	41,000	12.0	14.0
3673161	24ACB342A60	CAP**4821A**	58UVB080−14	40,500	11.2	13.5
3046421	24ACB342A60	CAP**4821A**+TDR		41,500	11.0	13.2
3046426	24ACB342A60	CAP**4824A**	58CV(A,X)135−22	41,000	11.7	14.5
3124134	24ACB342A60	CAP**4824A**	58ME(B,C)120−20	41,000	12.2	14.5
3046391	24ACB342A60	CAP**4824A**	58PH*135−20	41,000	12.0	14.0
3046424	24ACB342A60	CAP**4824A**+TDR		41,500	11.0	13.2
3046438	24ACB342A60	CNPH*4221A**	58CV(A,X)070−12	40,500	11.2	13.5

See notes on page 45

COMBINATION RATINGS CONTINUED

AHRI Ref. No.	Model Number	Indoor Model	Furnace Model	Capacity	EER	SEER
3613225	24ACB342A60	CNPH*4221A**	58ME(B,C)040−12	40,500	11.7	13.5
3124143	24ACB342A60	CNPH*4221A**	58ME(B,C)060−12	40,500	11.5	13.5
3124144	24ACB342A60	CNPH*4221A**	58ME(B,C)080−12	40,500	11.7	13.5
3124145	24ACB342A60	CNPH*4221A**	58ME(B,C)080−16	40,000	11.7	13.5
3124146	24ACB342A60	CNPH*4221A**	58ME(B,C)100−20	40,500	12.0	14.0
3124147	24ACB342A60	CNPH*4221A**	58ME(B,C)120−20	40,500	12.0	14.0
3124142	24ACB342A60	CNPH*4221A**	58MEB040−12	40,500	11.7	13.5
3046397	24ACB342A60	CNPH*4221A**	58PH*070−16	40,000	11.0	13.0
3046398	24ACB342A60	CNPH*4221A**	58PH*090−16	40,500	11.7	14.0
3046399	24ACB342A60	CNPH*4221A**	58PH*110−20	40,500	11.7	14.0
3046400	24ACB342A60	CNPH*4221A**	58PH*135−20	40,500	11.7	14.0
3046436	24ACB342A60	CNPH*4221A**+TDR		41,000	11.0	13.0
3046441	24ACB342A60	CNPH*4821A**	58CV(A,X)070−12	41,000	11.2	13.5
3613226	24ACB342A60	CNPH*4821A**	58ME(B,C)040−12	41,000	11.7	14.0
3124149	24ACB342A60	CNPH*4821A**	58ME(B,C)060−12	41,000	11.7	13.5
3124150	24ACB342A60	CNPH*4821A**	58ME(B,C)080−12	41,000	12.0	14.0
3124151	24ACB342A60	CNPH*4821A**	58ME(B,C)080−16	41,000	12.0	14.0
3124152	24ACB342A60	CNPH*4821A**	58ME(B,C)100−20	41,000	12.0	14.0
3124153	24ACB342A60	CNPH*4821A**	58ME(B,C)120−20	41,000	12.2	14.5
3124148	24ACB342A60	CNPH*4821A**	58MEB040−12	41,000	11.7	14.0
3046401	24ACB342A60	CNPH*4821A**	58PH*070−16	41,000	11.5	13.5
3046402	24ACB342A60	CNPH*4821A**	58PH*090−16	41,000	12.0	14.0
3046403	24ACB342A60	CNPH*4821A**	58PH*110−20	41,000	12.0	14.0
3046404	24ACB342A60	CNPH*4821A**	58PH*135−20	41,000	12.0	14.0
3046439	24ACB342A60	CNPH*4821A**+TDR		41,500	11.0	13.2
3613224	24ACB342A60	CNPV*4217A**	58ME(B,C)040−12	40,500	11.7	13.5
3124136	24ACB342A60	CNPV*4217A**	58ME(B,C)060−12	40,500	11.7	13.5
3124137	24ACB342A60	CNPV*4217A**	58ME(B,C)080−12	40,500	11.7	13.5
3124138	24ACB342A60	CNPV*4217A**	58ME(B,C)080−16	40,500	11.7	13.5
3124135	24ACB342A60	CNPV*4217A**	58MEB040−12	40,500	11.7	13.5
3046429	24ACB342A60	CNPV*4221A**	58CV(A,X)110−20	40,000	11.5	14.0
3124139	24ACB342A60	CNPV*4221A**	58ME(B,C)100−20	40,500	12.0	14.0
3046428	24ACB342A60	CNPV*4221A**	58MV(B,C)080−14	40,000	11.2	13.5
3046392	24ACB342A60	CNPV*4221A**	58PH*090−16	40,500	11.7	14.0
3046393	24ACB342A60	CNPV*4221A**	58PH*110−20	40,500	11.7	14.0
3756791	24ACB342A60	CNPV*4221A**	58UVB080−14	40,000	11.2	13.5
3046427	24ACB342A60	CNPV*4221A**+TDR		41,000	11.0	13.0
3046432	24ACB342A60	CNPV*4821A**	58CV(A,X)110−20	41,000	11.5	14.0
3124140	24ACB342A60	CNPV*4821A**	58ME(B,C)100−20	41,000	12.0	14.0
3046431	24ACB342A60	CNPV*4821A**	58MV(B,C)080−14	40,500	11.2	13.5
3046394	24ACB342A60	CNPV*4821A**	58PH*090−16	41,000	12.0	14.0
3046395	24ACB342A60	CNPV*4821A**	58PH*110−20	41,000	12.0	14.0
3756792	24ACB342A60	CNPV*4821A**	58UVB080−14	40,500	11.2	13.5
3046430	24ACB342A60	CNPV*4821A**+TDR		40,500	11.0	13.2
3046435	24ACB342A60	CNPV*4824A**	58CV(A,X)135−22	40,500	11.7	14.5
3124141	24ACB342A60	CNPV*4824A**	58ME(B,C)120−20	41,000	12.2	14.5
3046396	24ACB342A60	CNPV*4824A**	58PH*135−20	41,000	12.0	14.0
3046433	24ACB342A60	CNPV*4824A**+TDR		41,500	11.0	13.2
3046445	24ACB342A60	CSPH*4212A**	58CV(A,X)070−12	40,000	11.2	13.5
3613227	24ACB342A60	CSPH*4212A**	58ME(B,C)040−12	40,500	11.7	13.5
3124155	24ACB342A60	CSPH*4212A**	58ME(B,C)060−12	40,500	11.7	13.5
3124156	24ACB342A60	CSPH*4212A**	58ME(B,C)080−12	40,500	11.7	13.5
3124157	24ACB342A60	CSPH*4212A**	58ME(B,C)080−16	40,500	11.7	13.5
3124158	24ACB342A60	CSPH*4212A**	58ME(B,C)100−20	40,500	12.0	14.0
3124159	24ACB342A60	CSPH*4212A**	58ME(B,C)120−20	40,500	12.0	14.0
3124154	24ACB342A60	CSPH*4212A**	58MEB040−12	40,500	11.7	13.5
3046405	24ACB342A60	CSPH*4212A**	58PH*070−16	41,000	11.5	13.5
3046406	24ACB342A60	CSPH*4212A**	58PH*090−16	41,000	12.0	14.0
3046407	24ACB342A60	CSPH*4212A**	58PH*110−20	41,000	12.0	14.0
3046408	24ACB342A60	CSPH*4212A**	58PH*135−20	41,000	12.0	14.0
3046443	24ACB342A60	CSPH*4212A**+TDR		40,500	11.0	13.2
3046448	24ACB342A60	CSPH*4812A**	58CV(A,X)070−12	40,000	11.2	13.5
3613228	24ACB342A60	CSPH*4812A**	58ME(B,C)040−12	41,000	12.0	14.0
3124161	24ACB342A60	CSPH*4812A**	58ME(B,C)060−12	41,000	11.7	13.5
3124162	24ACB342A60	CSPH*4812A**	58ME(B,C)080−12	41,000	12.0	14.0
3124163	24ACB342A60	CSPH*4812A**	58ME(B,C)080−16	41,000	12.0	14.0
3124164	24ACB342A60	CSPH*4812A**	58ME(B,C)100−20	41,000	12.0	14.0
3124165	24ACB342A60	CSPH*4812A**	58ME(B,C)120−20	41,000	12.2	14.5
3124160	24ACB342A60	CSPH*4812A**	58MEB040−12	41,000	12.0	14.0
3046409	24ACB342A60	CSPH*4812A**	58PH*070−16	41,000	11.5	13.5
3046410	24ACB342A60	CSPH*4812A**	58PH*090−16	41,500	12.0	14.0
3046411	24ACB342A60	CSPH*4812A**	58PH*110−20	41,500	12.0	14.0
3046412	24ACB342A60	CSPH*4812A**	58PH*135−20	41,500	12.0	14.0
3046446	24ACB342A60	CSPH*4812A**+TDR		41,000	11.0	13.2
4208648	24ACB342A60	FB4CNF042		41,000	11.0	13.0
4208649	24ACB342A60	FB4CNF042+TXV		41,000	11.0	13.5
4208650	24ACB342A60	FB4CNF048		41,000	11.0	13.0
4208651	24ACB342A60	FB4CNF048+TXV		41,000	11.0	13.5
3046453	24ACB342A60	FE4AN(B,F)003+UI		40,500	11.5	14.0

See notes on page 45

COMBINATION RATINGS CONTINUED

AHRI Ref. No.	Model Number	Indoor Model	Furnace Model	Capacity	EER	SEER
3046454	24ACB342A60	FE4AN(B,F)005+UI		42,000	11.7	14.5
3046455	24ACB342A60	FE4ANB006+UI		42,500	12.0	15.0
3404541	24ACB342A60	FV4CN(B,F)003		40,500	11.5	14.0
3404542	24ACB342A60	FV4CN(B,F)005		41,500	11.7	14.5
3404543	24ACB342A60	FV4CNB006		42,500	12.0	15.0
4208652	24ACB342A60	FY5BNF042		41,000	11.0	13.0
4208653	24ACB342A60	FY5BNF042+TXV		41,000	11.0	13.0
4208654	24ACB342A60	FY5BNF048		41,000	11.0	13.0
4208655	24ACB342A60	FY5BNF048+TXV		41,000	11.0	13.0
3045502	24ACB348A30	†CAP**4821A**+TDR		46,000	11.0	13.0
3045528	24ACB348A30	CAP**4817A**	58CV(A,X)090−16	45,500	11.2	13.5
3101605	24ACB348A30	CAP**4817A**	58ME(B,C)080−16	45,500	11.2	13.2
3045527	24ACB348A30	CAP**4817A**+TDR		45,500	11.0	13.0
3045531	24ACB348A30	CAP**4821A**	58CV(A,X)110−20	45,000	11.2	13.5
3101606	24ACB348A30	CAP**4821A**	58ME(B,C)100−20	45,000	11.5	13.5
3045529	24ACB348A30	CAP**4821A**	58MV(B,C)080−20	45,000	11.0	13.2
3045530	24ACB348A30	CAP**4821A**	58MV(B,C)100−20	45,000	11.4	13.7
3045503	24ACB348A30	CAP**4821A**	58PH*090−16	45,000	11.5	13.5
3045504	24ACB348A30	CAP**4821A**	58PH*110−20	45,000	11.7	13.5
3673162	24ACB348A30	CAP**4821A**	58UVB080−20	45,000	11.0	13.2
3673163	24ACB348A30	CAP**4821A**	58UVB100−20	45,000	11.4	13.7
4130878	24ACB348A30	CAP**4821A**	58VLR120−20	44,500	11.0	13.5
4130877	24ACB348A30	CAP**4821A**	58VMR120−20	44,500	11.0	13.2
4736238	24ACB348A30	CAP**4821A**	59*N*A100V21**20	44,500	11.0	13.3
4736239	24ACB348A30	CAP**4821A**	59*P5A100E21**16	44,500	11.0	13.3
3690672	24ACB348A30	CAP**4823A**	58HDV080−−20	46,000	11.0	13.0
4736250	24ACB348A30	CAP**4823A**	59*N*A100V21**20	44,500	11.0	13.3
4736251	24ACB348A30	CAP**4823A**	59*N*A120V24**22	44,500	11.2	13.5
4736252	24ACB348A30	CAP**4823A**	59*P5A100E21**16	44,500	11.0	13.3
4736253	24ACB348A30	CAP**4823A**	59*P5A120E24**22	44,500	11.2	13.5
3644879	24ACB348A30	CAP**4823A**+TDR		46,000	11.0	13.0
3045534	24ACB348A30	CAP**4824A**	58CV(A,X)135−22	45,500	11.2	13.5
3101607	24ACB348A30	CAP**4824A**	58ME(B,C)120−20	45,500	11.5	13.5
3045533	24ACB348A30	CAP**4824A**	58MV(B,C)120−20	45,000	11.2	13.5
3045505	24ACB348A30	CAP**4824A**	58PH*135−20	45,000	11.2	13.5
3673164	24ACB348A30	CAP**4824A**	58UVB120−20	45,000	11.2	13.5
4736240	24ACB348A30	CAP**4824A**	59*N*A100V21**20	44,500	11.0	13.3
4736241	24ACB348A30	CAP**4824A**	59*N*A120V24**22	44,500	11.4	13.7
4736242	24ACB348A30	CAP**4824A**	59*P5A100E21**16	44,500	11.0	13.3
4736243	24ACB348A30	CAP**4824A**	59*P5A120E24**22	45,000	11.2	13.5
3045532	24ACB348A30	CAP**4824A**+TDR		46,000	11.0	13.0
3045537	24ACB348A30	CAP**6021A**	58CV(A,X)110−20	47,500	11.2	13.5
3101608	24ACB348A30	CAP**6021A**	58ME(B,C)100−20	46,000	11.7	14.0
3045536	24ACB348A30	CAP**6021A**	58MV(B,C)080−20	46,000	11.2	13.5
3045506	24ACB348A30	CAP**6021A**	58PH*090−16	46,500	11.7	13.5
3045507	24ACB348A30	CAP**6021A**	58PH*110−20	46,500	12.0	14.0
3673165	24ACB348A30	CAP**6021A**	58UVB080−20	46,000	11.2	13.5
4130880	24ACB348A30	CAP**6021A**	58VLR120−20	45,500	11.5	13.5
4130879	24ACB348A30	CAP**6021A**	58VMR120−20	45,500	11.0	13.5
4736244	24ACB348A30	CAP**6021A**	59*N*A100V21**20	45,500	11.4	13.7
4736245	24ACB348A30	CAP**6021A**	59*P5A100E21**16	45,500	11.2	13.5
4130881	24ACB348A30	CAP**6021A**	OVLAAB048112	45,500	11.0	13.2
3045535	24ACB348A30	CAP**6021A**+TDR		47,000	11.0	13.2
3045540	24ACB348A30	CAP**6024A**	58CV(A,X)135−22	46,500	11.5	14.0
3101609	24ACB348A30	CAP**6024A**	58ME(B,C)120−20	46,000	11.7	14.0
3045539	24ACB348A30	CAP**6024A**	58MV(B,C)120−20	46,000	11.5	14.0
3045508	24ACB348A30	CAP**6024A**	58PH*135−20	46,000	11.7	14.0
3673166	24ACB348A30	CAP**6024A**	58UVB120−20	46,000	11.5	14.0
4736246	24ACB348A30	CAP**6024A**	59*N*A100V21**20	45,500	11.4	13.7
4736247	24ACB348A30	CAP**6024A**	59*N*A120V24**22	45,500	11.5	14.0
4736248	24ACB348A30	CAP**6024A**	59*P5A100E21**16	45,500	11.2	13.5
4736249	24ACB348A30	CAP**6024A**	59*P5A120E24**22	46,000	11.4	13.7
3045538	24ACB348A30	CAP**6024A**+TDR		47,000	11.0	13.2
3690673	24ACB348A30	CAP**6025A**	58HDV100−−20	46,000	11.0	13.5
4736254	24ACB348A30	CAP**6025A**	59*N*A100V21**20	45,500	11.4	13.7
4736255	24ACB348A30	CAP**6025A**	59*N*A120V24**22	45,500	11.5	14.0
4736256	24ACB348A30	CAP**6025A**	59*P5A100E21**16	45,500	11.2	13.5
4736257	24ACB348A30	CAP**6025A**	59*P5A120E24**22	46,000	11.4	13.7
3644880	24ACB348A30	CAP**6025A**+TDR		47,000	11.0	13.2
3045556	24ACB348A30	CNPH*4821A**	58CV(A,X)090−16	45,000	11.2	13.5
3045557	24ACB348A30	CNPH*4821A**	58CV(A,X)110−20	45,500	11.2	13.5
4130909	24ACB348A30	CNPH*4821A**	58HDV080−−20	45,000	11.0	13.2
4130910	24ACB348A30	CNPH*4821A**	58HDV100−−20	45,000	11.0	13.2
3101613	24ACB348A30	CNPH*4821A**	58ME(B,C)080−16	45,500	11.2	13.2
3101614	24ACB348A30	CNPH*4821A**	58ME(B,C)100−20	45,000	11.5	13.5
3101615	24ACB348A30	CNPH*4821A**	58ME(B,C)120−20	45,500	11.5	13.5
3045554	24ACB348A30	CNPH*4821A**	58MV(B,C)080−20	45,000	11.0	13.2
3045555	24ACB348A30	CNPH*4821A**	58MV(B,C)100−20	45,000	11.2	13.5

See notes on page 45

COMBINATION RATINGS CONTINUED

AHRI Ref. No.	Model Number	Indoor Model	Furnace Model	Capacity	EER	SEER
3045513	24ACB348A30	CNPH*4821A**	58PH*090−16	45,500	11.5	13.5
3045514	24ACB348A30	CNPH*4821A**	58PH*110−20	45,500	11.7	13.5
3045515	24ACB348A30	CNPH*4821A**	58PH*135−20	45,500	11.5	13.2
4130885	24ACB348A30	CNPH*4821A**	58VLR120−20	45,000	11.0	13.5
4130884	24ACB348A30	CNPH*4821A**	58VMR120−20	44,500	11.0	13.2
4736273	24ACB348A30	CNPH*4821A**	59*N*A100V21**20	44,500	11.0	13.3
4736274	24ACB348A30	CNPH*4821A**	59*N*A120V24**22	44,500	11.4	13.7
4736275	24ACB348A30	CNPH*4821A**	59*P5A080E17**16	44,500	11.0	13.0
4736276	24ACB348A30	CNPH*4821A**	59*P5A100E21**16	44,500	11.0	13.3
4736277	24ACB348A30	CNPH*4821A**	59*P5A120E24**22	45,000	11.2	13.5
4130886	24ACB348A30	CNPH*4821A**	OVLAAB060154	45,500	11.0	13.2
3045553	24ACB348A30	CNPH*4821A**+TDR		46,000	11.0	13.0
3045561	24ACB348A30	CNPH*6024A**	58CV(A,X)090−16	46,000	11.2	13.5
3045562	24ACB348A30	CNPH*6024A**	58CV(A,X)110−20	46,000	11.2	13.5
4130911	24ACB348A30	CNPH*6024A**	58HDV080−−20	46,000	11.0	13.5
4130912	24ACB348A30	CNPH*6024A**	58HDV100−−20	46,000	11.0	13.5
3101616	24ACB348A30	CNPH*6024A**	58ME(B,C)080−16	46,000	11.5	13.5
3101617	24ACB348A30	CNPH*6024A**	58ME(B,C)100−20	46,000	11.7	14.0
3101618	24ACB348A30	CNPH*6024A**	58ME(B,C)120−20	46,000	11.7	14.0
3045559	24ACB348A30	CNPH*6024A**	58MV(B,C)080−20	46,000	11.2	13.5
3045560	24ACB348A30	CNPH*6024A**	58MV(B,C)100−20	46,000	11.2	13.5
3045516	24ACB348A30	CNPH*6024A**	58PH*070−16	45,500	11.0	13.0
3045517	24ACB348A30	CNPH*6024A**	58PH*090−16	46,000	11.7	13.5
3045518	24ACB348A30	CNPH*6024A**	58PH*110−20	46,000	11.7	14.0
3045519	24ACB348A30	CNPH*6024A**	58PH*135−20	46,000	11.7	14.0
4130888	24ACB348A30	CNPH*6024A**	58VLR120−20	45,500	11.5	13.5
4130887	24ACB348A30	CNPH*6024A**	58VMR120−20	45,500	11.0	13.5
4736278	24ACB348A30	CNPH*6024A**	59*N*A100V21**20	45,000	11.4	13.7
4736279	24ACB348A30	CNPH*6024A**	59*N*A120V24**22	45,000	11.5	14.0
4736280	24ACB348A30	CNPH*6024A**	59*P5A080E17**16	45,500	11.0	13.3
4736281	24ACB348A30	CNPH*6024A**	59*P5A100E21**16	45,500	11.2	13.5
4736282	24ACB348A30	CNPH*6024A**	59*P5A120E24**22	46,000	11.4	13.7
4130889	24ACB348A30	CNPH*6024A**	OVLAAB048112	45,500	11.0	13.2
4130890	24ACB348A30	CNPH*6024A**	OVLAAB060154	46,500	11.0	13.5
3045558	24ACB348A30	CNPH*6024A**+TDR		47,000	11.0	13.2
3690685	24ACB348A30	CNPH*6124A**	58CV(A,X)090−16	46,500	11.5	14.0
3690686	24ACB348A30	CNPH*6124A**	58CV(A,X)110−20	46,500	11.5	14.0
3690687	24ACB348A30	CNPH*6124A**	58CV(A,X)135−22	46,500	11.5	14.0
3690688	24ACB348A30	CNPH*6124A**	58CV(A,X)155−22	46,500	12.0	14.5
3690696	24ACB348A30	CNPH*6124A**	58HDV080−−20	46,500	11.0	13.5
3690697	24ACB348A30	CNPH*6124A**	58HDV100−−20	46,500	11.0	13.5
3690693	24ACB348A30	CNPH*6124A**	58ME(B,C)080−16	46,500	11.0	13.5
3690694	24ACB348A30	CNPH*6124A**	58ME(B,C)100−20	46,500	11.5	14.0
3690695	24ACB348A30	CNPH*6124A**	58ME(B,C)120−20	46,500	11.5	14.0
3690682	24ACB348A30	CNPH*6124A**	58MV(B,C)080−20	46,500	11.0	13.5
3690683	24ACB348A30	CNPH*6124A**	58MV(B,C)100−20	46,500	11.0	13.5
3690684	24ACB348A30	CNPH*6124A**	58MV(B,C)120−20	46,500	11.5	14.0
3690689	24ACB348A30	CNPH*6124A**	58PH*070−16	46,500	11.0	13.0
3690690	24ACB348A30	CNPH*6124A**	58PH*090−16	46,500	11.5	14.0
3690691	24ACB348A30	CNPH*6124A**	58PH*110−20	46,500	11.5	14.0
3690692	24ACB348A30	CNPH*6124A**	58PH*135−20	46,500	11.5	14.0
4130892	24ACB348A30	CNPH*6124A**	58VLR120−20	46,000	11.5	14.0
4130891	24ACB348A30	CNPH*6124A**	58VMR120−20	45,500	11.0	13.5
4736283	24ACB348A30	CNPH*6124A**	59*N*A100V21**20	45,500	11.4	13.7
4736284	24ACB348A30	CNPH*6124A**	59*N*A120V24**22	45,500	11.5	14.0
4736285	24ACB348A30	CNPH*6124A**	59*P5A100E21**16	45,500	11.4	13.7
4736286	24ACB348A30	CNPH*6124A**	59*P5A120E24**22	46,000	11.5	14.0
4130893	24ACB348A30	CNPH*6124A**	OVLAAB048112	46,000	11.0	13.2
4130894	24ACB348A30	CNPH*6124A**	OVLAAB060154	47,000	11.0	13.5
3690681	24ACB348A30	CNPH*6124A**+TDR		46,500	11.0	13.0
3045543	24ACB348A30	CNPV*4221A**	58CV(A,X)110−20	44,500	11.2	13.5
3045542	24ACB348A30	CNPV*4221A**	58MV(B,C)080−20	44,500	11.0	13.2
3756773	24ACB348A30	CNPV*4221A**	58UVB080−20	44,500	11.0	13.2
3045541	24ACB348A30	CNPV*4221A**+TDR		44,500	11.0	13.0
3045546	24ACB348A30	CNPV*4821A**	58CV(A,X)110−20	45,000	11.2	13.5
4130902	24ACB348A30	CNPV*4821A**	58HDV080−−20	45,000	11.0	13.2
3101610	24ACB348A30	CNPV*4821A**	58ME(B,C)100−20	45,000	11.5	13.5
3045545	24ACB348A30	CNPV*4821A**	58MV(B,C)080−20	45,000	11.0	13.2
4558802	24ACB348A30	CNPV*4821A**	58MV(B,C)100−20	45,000	11.2	13.2
3045509	24ACB348A30	CNPV*4821A**	58PH*090−16	45,500	11.5	13.5
3045510	24ACB348A30	CNPV*4821A**	58PH*110−20	45,500	11.7	13.5
3756774	24ACB348A30	CNPV*4821A**	58UVB080−20	45,000	11.0	13.2
4130883	24ACB348A30	CNPV*4821A**	58VLR120−20	45,000	11.0	13.5
4130882	24ACB348A30	CNPV*4821A**	58VMR120−20	44,500	11.0	13.2
4736258	24ACB348A30	CNPV*4821A**	59*N*A100V21**20	44,500	11.0	13.3
4736259	24ACB348A30	CNPV*4821A**	59*P5A080E17**16	44,500	11.0	13.0
4736260	24ACB348A30	CNPV*4821A**	59*P5A100E21**16	44,500	11.0	13.3
3045544	24ACB348A30	CNPV*4821A**+TDR		46,000	11.0	13.0
3045549	24ACB348A30	CNPV*4824A**	58CV(A,X)135−22	45,500	11.2	13.5

See notes on page 45

COMBINATION RATINGS CONTINUED

AHRI Ref. No.	Model Number	Indoor Model	Furnace Model	Capacity	EER	SEER
4130903	24ACB348A30	CNPV*4824A**	58HDV080−−20	45,000	11.0	13.2
4130904	24ACB348A30	CNPV*4824A**	58HDV100−−20	45,000	11.0	13.2
3101611	24ACB348A30	CNPV*4824A**	58ME(B,C)120−20	45,500	11.5	13.5
3045548	24ACB348A30	CNPV*4824A**	58MV(B,C)120−20	45,500	11.2	13.5
3045511	24ACB348A30	CNPV*4824A**	58PH*135−20	45,500	11.2	13.5
3756775	24ACB348A30	CNPV*4824A**	58UVB120−20	45,500	11.2	13.5
4736261	24ACB348A30	CNPV*4824A**	59*N*A100V21**20	44,500	11.0	13.3
4736262	24ACB348A30	CNPV*4824A**	59*N*A120V24**22	44,500	11.4	13.7
4736263	24ACB348A30	CNPV*4824A**	59*P5A100E21**16	44,500	11.0	13.3
4736264	24ACB348A30	CNPV*4824A**	59*P5A120E24**22	45,000	11.2	13.5
3045547	24ACB348A30	CNPV*4824A**+TDR		46,000	11.0	13.0
3045552	24ACB348A30	CNPV*6024A**	58CV(A,X)135−22	46,000	11.5	14.0
4130905	24ACB348A30	CNPV*6024A**	58HDV080−−20	46,000	11.0	13.5
4130906	24ACB348A30	CNPV*6024A**	58HDV100−−20	46,000	11.0	13.5
3101612	24ACB348A30	CNPV*6024A**	58ME(B,C)120−20	46,000	11.7	14.0
3045551	24ACB348A30	CNPV*6024A**	58MV(B,C)120−20	46,000	11.2	13.5
3045512	24ACB348A30	CNPV*6024A**	58PH*135−20	46,000	11.7	14.0
3756776	24ACB348A30	CNPV*6024A**	58UVB120−20	46,000	11.2	13.5
4736265	24ACB348A30	CNPV*6024A**	59*N*A100V21**20	45,000	11.4	13.7
4736266	24ACB348A30	CNPV*6024A**	59*N*A120V24**22	45,000	11.5	14.0
4736267	24ACB348A30	CNPV*6024A**	59*P5A100E21**16	45,500	11.2	13.5
4736268	24ACB348A30	CNPV*6024A**	59*P5A120E24**22	46,000	11.4	13.7
3045550	24ACB348A30	CNPV*6024A**+TDR		47,000	11.0	13.2
3690676	24ACB348A30	CNPV*6124A**	58CV(A,X)135−22	46,500	12.0	14.5
3690677	24ACB348A30	CNPV*6124A**	58CV(A,X)155−22	46,500	12.0	14.5
4130907	24ACB348A30	CNPV*6124A**	58HDV080−−20	46,500	11.0	13.5
4130908	24ACB348A30	CNPV*6124A**	58HDV100−−20	46,500	11.5	13.5
3690680	24ACB348A30	CNPV*6124A**	58HDV100−−20 (DWNFLW ONLY)	46,500	11.5	14.0
3690679	24ACB348A30	CNPV*6124A**	58ME(B,C)120−20	46,500	12.0	14.5
3690675	24ACB348A30	CNPV*6124A**	58MV(B,C)120−20	46,500	11.5	14.0
3690678	24ACB348A30	CNPV*6124A**	58PH*135−20	46,500	11.5	14.0
3690884	24ACB348A30	CNPV*6124A**	58UVB120−20	46,500	11.5	14.0
4736269	24ACB348A30	CNPV*6124A**	59*N*A100V21**20	46,000	11.5	14.0
4736270	24ACB348A30	CNPV*6124A**	59*N*A120V24**22	46,000	11.8	14.2
4736271	24ACB348A30	CNPV*6124A**	59*P5A100E21**16	46,000	11.4	13.7
4736272	24ACB348A30	CNPV*6124A**	59*P5A120E24**22	46,500	11.5	14.0
3690674	24ACB348A30	CNPV*6124A**+TDR		46,500	11.0	13.0
3045566	24ACB348A30	CSPH*4812A**	58CV(A,X)090−16	44,500	11.2	13.5
3690698	24ACB348A30	CSPH*4812A**	58HDV080−−20	46,500	11.0	13.5
3690699	24ACB348A30	CSPH*4812A**	58HDV100−−20	46,000	11.0	13.5
3101619	24ACB348A30	CSPH*4812A**	58ME(B,C)080−16	45,500	11.2	13.2
3101620	24ACB348A30	CSPH*4812A**	58ME(B,C)100−20	45,000	11.5	13.5
3101621	24ACB348A30	CSPH*4812A**	58ME(B,C)120−20	45,500	11.5	13.5
3045565	24ACB348A30	CSPH*4812A**	58MV(B,C)080−20	44,500	11.0	13.2
3045520	24ACB348A30	CSPH*4812A**	58PH*090−16	45,500	11.5	13.5
3045521	24ACB348A30	CSPH*4812A**	58PH*110−20	45,500	11.7	13.5
3045522	24ACB348A30	CSPH*4812A**	58PH*135−20	45,500	11.2	13.5
4130896	24ACB348A30	CSPH*4812A**	58VLR120−20	45,000	11.0	13.5
4130895	24ACB348A30	CSPH*4812A**	58VMR120−20	45,000	11.0	13.2
4736287	24ACB348A30	CSPH*4812A**	59*N*A100V21**20	45,000	11.0	13.3
4736288	24ACB348A30	CSPH*4812A**	59*N*A120V24**22	45,000	11.4	13.7
4736289	24ACB348A30	CSPH*4812A**	59*P5A100E21**16	45,000	11.0	13.3
4736290	24ACB348A30	CSPH*4812A**	59*P5A120E24**22	45,000	11.4	13.7
4130897	24ACB348A30	CSPH*4812A**	OVLAAB060154	46,000	11.0	13.2
3045564	24ACB348A30	CSPH*4812A**+TDR		45,500	11.0	13.0
3045569	24ACB348A30	CSPH*6012A**	58CV(A,X)090−16	45,000	11.2	13.5
3690700	24ACB348A30	CSPH*6012A**	58HDV080−−20	46,500	11.0	13.5
3690701	24ACB348A30	CSPH*6012A**	58HDV100−−20	46,500	11.0	13.5
3101622	24ACB348A30	CSPH*6012A**	58ME(B,C)080−16	46,000	11.5	13.5
3101623	24ACB348A30	CSPH*6012A**	58ME(B,C)100−20	46,000	11.7	14.0
3101624	24ACB348A30	CSPH*6012A**	58ME(B,C)120−20	46,000	11.7	14.0
3045568	24ACB348A30	CSPH*6012A**	58MV(B,C)080−20	45,000	11.2	13.5
3045523	24ACB348A30	CSPH*6012A**	58PH*070−16	46,000	11.0	13.0
3045524	24ACB348A30	CSPH*6012A**	58PH*090−16	46,000	11.7	14.0
3045525	24ACB348A30	CSPH*6012A**	58PH*110−20	46,000	12.0	14.0
3045526	24ACB348A30	CSPH*6012A**	58PH*135−20	46,000	11.7	14.0
4130899	24ACB348A30	CSPH*6012A**	58VLR120−20	46,000	11.5	14.0
4130898	24ACB348A30	CSPH*6012A**	58VMR120−20	46,000	11.0	13.5
4736291	24ACB348A30	CSPH*6012A**	59*N*A100V21**20	45,500	11.4	13.7
4736292	24ACB348A30	CSPH*6012A**	59*N*A120V24**22	45,500	11.5	14.0
4736293	24ACB348A30	CSPH*6012A**	59*P5A080E17**16	45,500	11.0	13.3
4736294	24ACB348A30	CSPH*6012A**	59*P5A100E21**16	46,000	11.4	13.7
4736295	24ACB348A30	CSPH*6012A**	59*P5A120E24**22	46,000	11.5	14.0
4130900	24ACB348A30	CSPH*6012A**	OVLAAB048112	46,000	11.0	13.2
4130901	24ACB348A30	CSPH*6012A**	OVLAAB060154	47,000	11.0	13.5
3045567	24ACB348A30	CSPH*6012A**+TDR		46,000	11.0	13.2
3842859	24ACB348A30	FB4CNF048		45,500	11.0	13.0
4208589	24ACB348A30	FB4CNF048+TXV		45,500	11.0	13.5

See notes on page 45

COMBINATION RATINGS CONTINUED

AHRI Ref. No.	Model Number	Indoor Model	Furnace Model	Capacity	EER	SEER
3842860	24ACB348A30	FB4CNF060		46,000	11.0	13.0
3045572	24ACB348A30	FE4AN(B,F)005+UI		46,500	11.5	14.0
3045573	24ACB348A30	FE4ANB006+UI		47,000	11.7	14.5
3404525	24ACB348A30	FV4CN(B,F)005		46,500	11.5	14.0
3404526	24ACB348A30	FV4CNB006		47,000	11.7	14.5
3752085	24ACB348A30	FX4DN(B,F)049		46,500	11.5	14.0
3752086	24ACB348A30	FX4DN(B,F)061		47,000	12.0	14.5
4208591	24ACB348A30	FY5BNB060		46,500	11.0	13.0
3842861	24ACB348A30	FY5BNF048		46,000	11.0	13.0
4208590	24ACB348A30	FY5BNF048+TXV		46,000	11.0	13.5
3046459	24ACB348A50	†CAP**4821A**+TDR		46,000	11.0	13.0
3046485	24ACB348A50	CAP**4817A**	58CV(A,X)090−16	45,500	11.2	13.5
3124062	24ACB348A50	CAP**4817A**	58ME(B,C)080−16	45,500	11.2	13.2
3046484	24ACB348A50	CAP**4817A**+TDR		45,500	11.0	13.0
3046488	24ACB348A50	CAP**4821A**	58CV(A,X)110−20	45,000	11.2	13.5
3124063	24ACB348A50	CAP**4821A**	58ME(B,C)100−20	45,000	11.5	13.5
3046486	24ACB348A50	CAP**4821A**	58MV(B,C)080−20	45,000	11.0	13.2
3046487	24ACB348A50	CAP**4821A**	58MV(B,C)100−20	45,000	11.4	13.7
3046460	24ACB348A50	CAP**4821A**	58PH*090−16	45,000	11.5	13.5
3046461	24ACB348A50	CAP**4821A**	58PH*110−20	45,000	11.7	13.5
3673167	24ACB348A50	CAP**4821A**	58UVB080−20	45,000	11.0	13.2
3673168	24ACB348A50	CAP**4821A**	58UVB100−20	45,000	11.4	13.7
3046491	24ACB348A50	CAP**4824A**	58CV(A,X)135−22	45,500	11.2	13.5
3124064	24ACB348A50	CAP**4824A**	58ME(B,C)120−20	45,500	11.5	13.5
3046490	24ACB348A50	CAP**4824A**	58MV(B,C)120−20	45,000	11.2	13.5
3046462	24ACB348A50	CAP**4824A**	58PH*135−20	45,000	11.2	13.5
3673169	24ACB348A50	CAP**4824A**	58UVB120−20	45,000	11.2	13.5
3046489	24ACB348A50	CAP**4824A**+TDR		46,000	11.0	13.0
3046494	24ACB348A50	CAP**6021A**	58CV(A,X)110−20	47,500	11.2	13.5
3124065	24ACB348A50	CAP**6021A**	58ME(B,C)100−20	46,000	11.7	14.0
3046493	24ACB348A50	CAP**6021A**	58MV(B,C)080−20	46,000	11.2	13.5
3046463	24ACB348A50	CAP**6021A**	58PH*090−16	46,500	11.7	13.5
3046464	24ACB348A50	CAP**6021A**	58PH*110−20	46,500	12.0	14.0
3673170	24ACB348A50	CAP**6021A**	58UVB080−20	46,000	11.2	13.5
3046492	24ACB348A50	CAP**6021A**+TDR		47,000	11.0	13.2
3046497	24ACB348A50	CAP**6024A**	58CV(A,X)135−22	46,500	11.5	14.0
3124066	24ACB348A50	CAP**6024A**	58ME(B,C)120−20	46,000	11.7	14.0
3046496	24ACB348A50	CAP**6024A**	58MV(B,C)120−20	46,000	11.5	14.0
3046465	24ACB348A50	CAP**6024A**	58PH*135−20	46,000	11.7	14.0
3673171	24ACB348A50	CAP**6024A**	58UVB120−20	46,000	11.5	14.0
3046495	24ACB348A50	CAP**6024A**+TDR		47,000	11.0	13.2
3046513	24ACB348A50	CNPH*4821A**	58CV(A,X)090−16	45,000	11.2	13.5
3046514	24ACB348A50	CNPH*4821A**	58CV(A,X)110−20	45,500	11.2	13.5
3124070	24ACB348A50	CNPH*4821A**	58ME(B,C)080−16	45,500	11.2	13.2
3124071	24ACB348A50	CNPH*4821A**	58ME(B,C)100−20	45,000	11.5	13.5
3124072	24ACB348A50	CNPH*4821A**	58ME(B,C)120−20	45,500	11.5	13.5
3046511	24ACB348A50	CNPH*4821A**	58MV(B,C)080−20	45,000	11.0	13.2
3046512	24ACB348A50	CNPH*4821A**	58MV(B,C)100−20	45,000	11.2	13.5
3046470	24ACB348A50	CNPH*4821A**	58PH*090−16	45,500	11.5	13.5
3046471	24ACB348A50	CNPH*4821A**	58PH*110−20	45,500	11.7	13.5
3046472	24ACB348A50	CNPH*4821A**	58PH*135−20	45,500	11.5	13.2
3046510	24ACB348A50	CNPH*4821A**+TDR		46,000	11.0	13.0
3046518	24ACB348A50	CNPH*6024A**	58CV(A,X)090−16	46,000	11.2	13.5
3046519	24ACB348A50	CNPH*6024A**	58CV(A,X)110−20	46,000	11.2	13.5
3124073	24ACB348A50	CNPH*6024A**	58ME(B,C)080−16	46,000	11.5	13.5
3124074	24ACB348A50	CNPH*6024A**	58ME(B,C)100−20	46,000	11.7	14.0
3124075	24ACB348A50	CNPH*6024A**	58ME(B,C)120−20	46,000	11.7	14.0
3046516	24ACB348A50	CNPH*6024A**	58MV(B,C)080−20	46,000	11.2	13.5
3046517	24ACB348A50	CNPH*6024A**	58MV(B,C)100−20	46,000	11.2	13.5
3046473	24ACB348A50	CNPH*6024A**	58PH*070−16	45,500	11.0	13.0
3046474	24ACB348A50	CNPH*6024A**	58PH*090−16	46,000	11.7	13.5
3046475	24ACB348A50	CNPH*6024A**	58PH*110−20	46,000	11.7	14.0
3046476	24ACB348A50	CNPH*6024A**	58PH*135−20	46,000	11.7	14.0
3046515	24ACB348A50	CNPH*6024A**+TDR		47,000	11.0	13.2
3046500	24ACB348A50	CNPV*4221A**	58CV(A,X)110−20	44,500	11.2	13.5
3046499	24ACB348A50	CNPV*4221A**	58MV(B,C)080−20	44,500	11.0	13.2
3756793	24ACB348A50	CNPV*4221A**	58UVB080−20	44,500	11.0	13.2
3046498	24ACB348A50	CNPV*4221A**+TDR		44,500	11.0	13.0
3046503	24ACB348A50	CNPV*4821A**	58CV(A,X)110−20	45,000	11.2	13.5
3124067	24ACB348A50	CNPV*4821A**	58ME(B,C)100−20	45,000	11.5	13.5
3046502	24ACB348A50	CNPV*4821A**	58MV(B,C)080−20	45,000	11.0	13.2
3046466	24ACB348A50	CNPV*4821A**	58PH*090−16	45,500	11.5	13.5
3046467	24ACB348A50	CNPV*4821A**	58PH*110−20	45,500	11.7	13.5
3756794	24ACB348A50	CNPV*4821A**	58UVB080−20	45,000	11.0	13.2
3046501	24ACB348A50	CNPV*4821A**+TDR		46,000	11.0	13.0
3046506	24ACB348A50	CNPV*4824A**	58CV(A,X)135−22	45,500	11.2	13.5
3124068	24ACB348A50	CNPV*4824A**	58ME(B,C)120−20	45,500	11.5	13.5
3046505	24ACB348A50	CNPV*4824A**	58MV(B,C)120−20	45,500	11.2	13.5
3046468	24ACB348A50	CNPV*4824A**	58PH*135−20	45,500	11.2	13.5

See notes on page 45

COMBINATION RATINGS CONTINUED

AHRI Ref. No.	Model Number	Indoor Model	Furnace Model	Capacity	EER	SEER
3756795	24ACB348A50	CNPV*4824A**	58UVB120−20	45,500	11.2	13.5
3046504	24ACB348A50	CNPV*4824A**+TDR		46,000	11.0	13.0
3046509	24ACB348A50	CNPV*6024A**	58CV(A,X)135−22	46,000	11.5	14.0
3124069	24ACB348A50	CNPV*6024A**	58ME(B,C)120−20	46,000	11.7	14.0
3046508	24ACB348A50	CNPV*6024A**	58MV(B,C)120−20	46,000	11.2	13.5
3046469	24ACB348A50	CNPV*6024A**	58PH*135−20	46,000	11.7	14.0
3756796	24ACB348A50	CNPV*6024A**	58UVB120−20	46,000	11.2	13.5
3046507	24ACB348A50	CNPV*6024A**+TDR		47,000	11.0	13.2
3046523	24ACB348A50	CSPH*4812A**	58CV(A,X)090−16	44,500	11.2	13.5
3124076	24ACB348A50	CSPH*4812A**	58ME(B,C)080−16	45,500	11.2	13.2
3124077	24ACB348A50	CSPH*4812A**	58ME(B,C)100−20	45,000	11.5	13.5
3124078	24ACB348A50	CSPH*4812A**	58ME(B,C)120−20	45,500	11.5	13.5
3046522	24ACB348A50	CSPH*4812A**	58MV(B,C)080−20	44,500	11.0	13.2
3046477	24ACB348A50	CSPH*4812A**	58PH*090−16	45,500	11.5	13.5
3046478	24ACB348A50	CSPH*4812A**	58PH*110−20	45,500	11.7	13.5
3046479	24ACB348A50	CSPH*4812A**	58PH*135−20	45,500	11.2	13.5
3046521	24ACB348A50	CSPH*4812A**+TDR		45,500	11.0	13.0
3046526	24ACB348A50	CSPH*6012A**	58CV(A,X)090−16	45,000	11.2	13.5
3124079	24ACB348A50	CSPH*6012A**	58ME(B,C)080−16	46,000	11.5	13.5
3124080	24ACB348A50	CSPH*6012A**	58ME(B,C)100−20	46,000	11.7	14.0
3124081	24ACB348A50	CSPH*6012A**	58ME(B,C)120−20	46,000	11.7	14.0
3046525	24ACB348A50	CSPH*6012A**	58MV(B,C)080−20	45,000	11.2	13.5
3046480	24ACB348A50	CSPH*6012A**	58PH*070−16	46,000	11.0	13.0
3046481	24ACB348A50	CSPH*6012A**	58PH*090−16	46,000	11.7	14.0
3046482	24ACB348A50	CSPH*6012A**	58PH*110−20	46,000	12.0	14.0
3046483	24ACB348A50	CSPH*6012A**	58PH*135−20	46,000	11.7	14.0
3046524	24ACB348A50	CSPH*6012A**+TDR		46,000	11.0	13.2
4208613	24ACB348A50	FB4CNF048		45,500	11.0	13.0
4208614	24ACB348A50	FB4CNF048+TXV		45,500	11.0	13.5
4208615	24ACB348A50	FB4CNF060		46,000	11.0	13.0
3046529	24ACB348A50	FE4AN(B,F)005+UI		46,500	11.5	14.0
3046530	24ACB348A50	FE4ANB006+UI		47,000	11.7	14.5
3404544	24ACB348A50	FV4CN(B,F)005		46,500	11.5	14.0
3404545	24ACB348A50	FV4CNB006		47,000	11.7	14.5
4208618	24ACB348A50	FY5BNB060		46,500	11.0	13.0
4208616	24ACB348A50	FY5BNF048		46,000	11.0	13.0
4208617	24ACB348A50	FY5BNF048+TXV		46,000	11.0	13.5
3046535	24ACB348A60	†CAP**4821A**+TDR		46,000	11.0	13.0
3046561	24ACB348A60	CAP**4817A**	58CV(A,X)090−16	45,500	11.2	13.5
3124166	24ACB348A60	CAP**4817A**	58ME(B,C)080−16	45,500	11.2	13.2
3046560	24ACB348A60	CAP**4817A**+TDR		45,500	11.0	13.0
3046564	24ACB348A60	CAP**4821A**	58CV(A,X)110−20	45,000	11.2	13.5
3124167	24ACB348A60	CAP**4821A**	58ME(B,C)100−20	45,000	11.5	13.5
3046562	24ACB348A60	CAP**4821A**	58MV(B,C)080−20	45,000	11.0	13.2
3046563	24ACB348A60	CAP**4821A**	58MV(B,C)100−20	45,000	11.4	13.7
3046536	24ACB348A60	CAP**4821A**	58PH*090−16	45,000	11.5	13.5
3046537	24ACB348A60	CAP**4821A**	58PH*110−20	45,000	11.7	13.5
3673172	24ACB348A60	CAP**4821A**	58UVB080−20	45,000	11.0	13.2
3673173	24ACB348A60	CAP**4821A**	58UVB100−20	45,000	11.4	13.7
3046567	24ACB348A60	CAP**4824A**	58CV(A,X)135−22	45,500	11.2	13.5
3124168	24ACB348A60	CAP**4824A**	58ME(B,C)120−20	45,500	11.5	13.5
3046566	24ACB348A60	CAP**4824A**	58MV(B,C)120−20	45,000	11.2	13.5
3046538	24ACB348A60	CAP**4824A**	58PH*135−20	45,000	11.2	13.5
3673174	24ACB348A60	CAP**4824A**	58UVB120−20	45,000	11.2	13.5
3046565	24ACB348A60	CAP**4824A**+TDR		46,000	11.0	13.0
3046570	24ACB348A60	CAP**6021A**	58CV(A,X)110−20	47,500	11.2	13.5
3124169	24ACB348A60	CAP**6021A**	58ME(B,C)100−20	46,000	11.7	14.0
3046569	24ACB348A60	CAP**6021A**	58MV(B,C)080−20	46,000	11.2	13.5
3046539	24ACB348A60	CAP**6021A**	58PH*090−16	46,500	11.7	13.5
3046540	24ACB348A60	CAP**6021A**	58PH*110−20	46,500	12.0	14.0
3673175	24ACB348A60	CAP**6021A**	58UVB080−20	46,000	11.2	13.5
3046568	24ACB348A60	CAP**6021A**+TDR		47,000	11.0	13.2
3046573	24ACB348A60	CAP**6024A**	58CV(A,X)135−22	46,500	11.5	14.0
3124170	24ACB348A60	CAP**6024A**	58ME(B,C)120−20	46,000	11.7	14.0
3046572	24ACB348A60	CAP**6024A**	58MV(B,C)120−20	46,000	11.5	14.0
3046541	24ACB348A60	CAP**6024A**	58PH*135−20	46,000	11.7	14.0
3673176	24ACB348A60	CAP**6024A**	58UVB120−20	46,000	11.5	14.0
3046571	24ACB348A60	CAP**6024A**+TDR		47,000	11.0	13.2
3046589	24ACB348A60	CNPH*4821A**	58CV(A,X)090−16	45,000	11.2	13.5
3046590	24ACB348A60	CNPH*4821A**	58CV(A,X)110−20	45,500	11.2	13.5
3124174	24ACB348A60	CNPH*4821A**	58ME(B,C)080−16	45,500	11.2	13.2
3124175	24ACB348A60	CNPH*4821A**	58ME(B,C)100−20	45,000	11.5	13.5
3124176	24ACB348A60	CNPH*4821A**	58ME(B,C)120−20	45,500	11.5	13.5
3046587	24ACB348A60	CNPH*4821A**	58MV(B,C)080−20	45,000	11.0	13.2
3046588	24ACB348A60	CNPH*4821A**	58MV(B,C)100−20	45,000	11.2	13.5
3046546	24ACB348A60	CNPH*4821A**	58PH*090−16	45,500	11.5	13.5
3046547	24ACB348A60	CNPH*4821A**	58PH*110−20	45,500	11.7	13.5
3046548	24ACB348A60	CNPH*4821A**	58PH*135−20	45,500	11.5	13.2
3046586	24ACB348A60	CNPH*4821A**+TDR		46,000	11.0	13.0

See notes on page 45

COMBINATION RATINGS CONTINUED

AHRI Ref. No.	Model Number	Indoor Model	Furnace Model	Capacity	EER	SEER
3046594	24ACB348A60	CNPH*6024A**	58CV(A,X)090−16	46,000	11.2	13.5
3046595	24ACB348A60	CNPH*6024A**	58CV(A,X)110−20	46,000	11.2	13.5
3124177	24ACB348A60	CNPH*6024A**	58ME(B,C)080−16	46,000	11.5	13.5
3124178	24ACB348A60	CNPH*6024A**	58ME(B,C)100−20	46,000	11.7	14.0
3124179	24ACB348A60	CNPH*6024A**	58ME(B,C)120−20	46,000	11.7	14.0
3046592	24ACB348A60	CNPH*6024A**	58MV(B,C)080−20	46,000	11.2	13.5
3046593	24ACB348A60	CNPH*6024A**	58MV(B,C)100−20	46,000	11.2	13.5
3046549	24ACB348A60	CNPH*6024A**	58PH*070−16	45,500	11.0	13.0
3046550	24ACB348A60	CNPH*6024A**	58PH*090−16	46,000	11.7	13.5
3046551	24ACB348A60	CNPH*6024A**	58PH*110−20	46,000	11.7	14.0
3046552	24ACB348A60	CNPH*6024A**	58PH*135−20	46,000	11.7	14.0
3046591	24ACB348A60	CNPH*6024A**+TDR		47,000	11.0	13.2
3046576	24ACB348A60	CNPV*4221A**	58CV(A,X)110−20	44,500	11.2	13.5
3046575	24ACB348A60	CNPV*4221A**	58MV(B,C)080−20	44,500	11.0	13.2
3756797	24ACB348A60	CNPV*4221A**	58UVB080−20	44,500	11.0	13.2
3046574	24ACB348A60	CNPV*4221A**+TDR		44,500	11.0	13.0
3046579	24ACB348A60	CNPV*4821A**	58CV(A,X)110−20	45,000	11.2	13.5
3124171	24ACB348A60	CNPV*4821A**	58ME(B,C)100−20	45,000	11.5	13.5
3046578	24ACB348A60	CNPV*4821A**	58MV(B,C)080−20	45,000	11.0	13.2
3046542	24ACB348A60	CNPV*4821A**	58PH*090−16	45,500	11.5	13.5
3046543	24ACB348A60	CNPV*4821A**	58PH*110−20	45,500	11.7	13.5
3756798	24ACB348A60	CNPV*4821A**	58UVB080−20	45,000	11.0	13.2
3046577	24ACB348A60	CNPV*4821A**+TDR		46,000	11.0	13.0
3046582	24ACB348A60	CNPV*4824A**	58CV(A,X)135−22	45,500	11.2	13.5
3124172	24ACB348A60	CNPV*4824A**	58ME(B,C)120−20	45,500	11.5	13.5
3046581	24ACB348A60	CNPV*4824A**	58MV(B,C)120−20	45,500	11.2	13.5
3046544	24ACB348A60	CNPV*4824A**	58PH*135−20	45,500	11.2	13.5
3756799	24ACB348A60	CNPV*4824A**	58UVB120−20	45,500	11.2	13.5
3046580	24ACB348A60	CNPV*4824A**+TDR		46,000	11.0	13.0
3046585	24ACB348A60	CNPV*6024A**	58CV(A,X)135−22	46,000	11.5	14.0
3124173	24ACB348A60	CNPV*6024A**	58ME(B,C)120−20	46,000	11.7	14.0
3046584	24ACB348A60	CNPV*6024A**	58MV(B,C)120−20	46,000	11.2	13.5
3046545	24ACB348A60	CNPV*6024A**	58PH*135−20	46,000	11.7	14.0
3756800	24ACB348A60	CNPV*6024A**	58UVB120−20	46,000	11.2	13.5
3046583	24ACB348A60	CNPV*6024A**+TDR		47,000	11.0	13.2
3046599	24ACB348A60	CSPH*4812A**	58CV(A,X)090−16	44,500	11.2	13.5
3124180	24ACB348A60	CSPH*4812A**	58ME(B,C)080−16	45,500	11.2	13.2
3124181	24ACB348A60	CSPH*4812A**	58ME(B,C)100−20	45,000	11.5	13.5
3124182	24ACB348A60	CSPH*4812A**	58ME(B,C)120−20	45,500	11.5	13.5
3046598	24ACB348A60	CSPH*4812A**	58MV(B,C)080−20	44,500	11.0	13.2
3046553	24ACB348A60	CSPH*4812A**	58PH*090−16	45,500	11.5	13.5
3046554	24ACB348A60	CSPH*4812A**	58PH*110−20	45,500	11.7	13.5
3046555	24ACB348A60	CSPH*4812A**	58PH*135−20	45,500	11.2	13.5
3046597	24ACB348A60	CSPH*4812A**+TDR		45,500	11.0	13.0
3046602	24ACB348A60	CSPH*6012A**	58CV(A,X)090−16	45,000	11.2	13.5
3124183	24ACB348A60	CSPH*6012A**	58ME(B,C)080−16	46,000	11.5	13.5
3124184	24ACB348A60	CSPH*6012A**	58ME(B,C)100−20	46,000	11.7	14.0
3124185	24ACB348A60	CSPH*6012A**	58ME(B,C)120−20	46,000	11.7	14.0
3046601	24ACB348A60	CSPH*6012A**	58MV(B,C)080−20	45,000	11.2	13.5
3046556	24ACB348A60	CSPH*6012A**	58PH*070−16	46,000	11.0	13.0
3046557	24ACB348A60	CSPH*6012A**	58PH*090−16	46,000	11.7	14.0
3046558	24ACB348A60	CSPH*6012A**	58PH*110−20	46,000	12.0	14.0
3046559	24ACB348A60	CSPH*6012A**	58PH*135−20	46,000	11.7	14.0
3046600	24ACB348A60	CSPH*6012A**+TDR		46,000	11.0	13.2
4208642	24ACB348A60	FB4CNF048		45,500	11.0	13.0
4208643	24ACB348A60	FB4CNF048+TXV		45,500	11.0	13.5
4208644	24ACB348A60	FB4CNF060		46,000	11.0	13.0
3046605	24ACB348A60	FE4AN(B,F)005+UI		46,500	11.5	14.0
3046606	24ACB348A60	FE4ANB006+UI		47,000	11.7	14.5
3404546	24ACB348A60	FV4CN(B,F)005		46,500	11.5	14.0
3404547	24ACB348A60	FV4CNB006		47,000	11.7	14.5
4208647	24ACB348A60	FY5BNB060		46,500	11.0	13.0
4208645	24ACB348A60	FY5BNF048		46,000	11.0	13.0
4208646	24ACB348A60	FY5BNF048+TXV		46,000	11.0	13.5
3285701	24ACB360A31	†CAP**6024A**+TDR		57,500	11.0	13.0
3285694	24ACB360A31	CAP**6021A**	58CV(A,X)110−20	56,000	11.0	13.2
3285695	24ACB360A31	CAP**6021A**	58ME(B,C)100−20	56,000	11.2	13.2
3285692	24ACB360A31	CAP**6021A**	58PH*090−16	55,500	11.0	13.0
3285693	24ACB360A31	CAP**6021A**	58PH*110−20	56,000	11.0	13.0
3285696	24ACB360A31	CAP**6021A**+TDR		56,500	11.0	13.0
3285698	24ACB360A31	CAP**6024A**	58CV(A,X)135−22	56,500	11.0	13.2
3285699	24ACB360A31	CAP**6024A**	58CV(A,X)155−22	56,500	11.2	13.5
3285700	24ACB360A31	CAP**6024A**	58ME(B,C)120−20	56,000	11.2	13.5
3285697	24ACB360A31	CAP**6024A**	58PH*135−20	56,000	11.0	13.0
4736296	24ACB360A31	CAP**6024A**	59*N*A120V24**22	55,500	11.0	13.3
4736297	24ACB360A31	CAP**6024A**	59*P5A120E24**22	55,500	11.0	13.3
3690652	24ACB360A31	CAP**6025A**	58HDV100−−20	56,500	11.0	13.0
4736298	24ACB360A31	CAP**6025A**	59*N*A120V24**22	55,500	11.0	13.3

See notes on page 45

COMBINATION RATINGS CONTINUED

AHRI Ref. No.	Model Number	Indoor Model	Furnace Model	Capacity	EER	SEER
4736299	24ACB360A31	CAP**6025A**	59*P5A120E24**22	55,500	11.0	13.3
3690651	24ACB360A31	CAP**6025A**+TDR		57,500	11.0	13.0
3285705	24ACB360A31	CNPH*6024A**	58CV(A,X)135−22	56,000	11.2	13.5
3285706	24ACB360A31	CNPH*6024A**	58CV(A,X)155−22	56,500	11.2	13.5
3285707	24ACB360A31	CNPH*6024A**	58ME(B,C)080−16	55,500	11.0	13.0
3285708	24ACB360A31	CNPH*6024A**	58ME(B,C)100−20	55,500	11.2	13.2
3285709	24ACB360A31	CNPH*6024A**	58ME(B,C)120−20	56,000	11.2	13.5
3285702	24ACB360A31	CNPH*6024A**	58PH*090−16	55,500	11.0	13.0
3285703	24ACB360A31	CNPH*6024A**	58PH*110−20	56,000	11.0	13.0
3285704	24ACB360A31	CNPH*6024A**	58PH*135−20	56,000	11.0	13.0
4736304	24ACB360A31	CNPH*6024A**	59*N*A120V24**22	55,500	11.0	13.3
4736305	24ACB360A31	CNPH*6024A**	59*P5A120E24**22	55,500	11.0	13.3
3285710	24ACB360A31	CNPH*6024A**+TDR		56,000	11.0	13.0
3690662	24ACB360A31	CNPH*6124A**	58CV(A,X)110−20	56,500	11.0	13.0
3690663	24ACB360A31	CNPH*6124A**	58CV(A,X)135−22	56,500	11.0	13.5
3690664	24ACB360A31	CNPH*6124A**	58CV(A,X)155−22	56,500	11.0	13.5
3690670	24ACB360A31	CNPH*6124A**	58HDV100−−20	56,500	11.0	13.0
3690667	24ACB360A31	CNPH*6124A**	58ME(B,C)080−16	56,000	11.0	13.0
3690668	24ACB360A31	CNPH*6124A**	58ME(B,C)100−20	56,500	11.0	13.5
3690669	24ACB360A31	CNPH*6124A**	58ME(B,C)120−20	56,500	11.0	13.5
3690661	24ACB360A31	CNPH*6124A**	58MV(B,C)120−20	56,500	11.0	13.0
3690665	24ACB360A31	CNPH*6124A**	58PH*110−20	56,500	11.0	13.5
3690666	24ACB360A31	CNPH*6124A**	58PH*135−20	56,500	11.0	13.5
4736306	24ACB360A31	CNPH*6124A**	59*N*A120V24**22	55,500	11.0	13.3
4736307	24ACB360A31	CNPH*6124A**	59*P5A120E24**22	55,500	11.0	13.3
3690660	24ACB360A31	CNPH*6124A**+TDR		56,500	11.0	13.0
3285712	24ACB360A31	CNPV*6024A**	58CV(A,X)135−22	56,000	11.0	13.5
3285713	24ACB360A31	CNPV*6024A**	58CV(A,X)155−22	56,500	11.2	13.5
3285714	24ACB360A31	CNPV*6024A**	58ME(B,C)120−20	56,000	11.2	13.5
3285711	24ACB360A31	CNPV*6024A**	58PH*135−20	56,000	11.0	13.0
4736300	24ACB360A31	CNPV*6024A**	59*N*A120V24**22	55,500	11.0	13.3
4736301	24ACB360A31	CNPV*6024A**	59*P5A120E24**22	55,500	11.0	13.3
3285715	24ACB360A31	CNPV*6024A**+TDR		57,000	11.0	13.0
3690655	24ACB360A31	CNPV*6124A**	58CV(A,X)135−22	57,000	11.0	13.5
3690656	24ACB360A31	CNPV*6124A**	58CV(A,X)155−22	57,000	11.0	13.5
4149554	24ACB360A31	CNPV*6124A**	58HDV100−−20	57,000	11.0	13.0
3690659	24ACB360A31	CNPV*6124A**	58HDV100−−20 (DWNFLW ONLY)	57,000	11.0	13.0
3690658	24ACB360A31	CNPV*6124A**	58ME(B,C)120−20	57,000	11.0	13.5
3690654	24ACB360A31	CNPV*6124A**	58MV(B,C)120−20	57,000	11.0	13.5
3690657	24ACB360A31	CNPV*6124A**	58PH*135−20	57,000	11.0	13.5
3690883	24ACB360A31	CNPV*6124A**	58UVB120−20	57,000	11.0	13.5
4736302	24ACB360A31	CNPV*6124A**	59*N*A120V24**22	56,000	11.2	13.5
4736303	24ACB360A31	CNPV*6124A**	59*P5A120E24**22	56,000	11.2	13.5
3690653	24ACB360A31	CNPV*6124A**+TDR		57,000	11.0	13.0
3285719	24ACB360A31	CSPH*6012A**	58CV(A,X)110−20	55,500	11.0	13.2
3285720	24ACB360A31	CSPH*6012A**	58CV(A,X)135−22	55,500	11.2	13.5
3285721	24ACB360A31	CSPH*6012A**	58CV(A,X)155−22	55,500	11.2	13.5
3690671	24ACB360A31	CSPH*6012A**	58HDV100−−20	56,500	11.0	13.0
3285722	24ACB360A31	CSPH*6012A**	58ME(B,C)080−16	55,500	11.0	13.2
3285723	24ACB360A31	CSPH*6012A**	58ME(B,C)100−20	56,000	11.2	13.2
3285724	24ACB360A31	CSPH*6012A**	58ME(B,C)120−20	56,000	11.2	13.5
3285716	24ACB360A31	CSPH*6012A**	58PH*090−16	56,000	11.0	13.0
3285717	24ACB360A31	CSPH*6012A**	58PH*110−20	56,500	11.5	13.5
3285718	24ACB360A31	CSPH*6012A**	58PH*135−20	56,000	11.0	13.0
4736308	24ACB360A31	CSPH*6012A**	59*N*A120V24**22	55,500	11.0	13.3
4736309	24ACB360A31	CSPH*6012A**	59*P5A120E24**22	56,000	11.0	13.3
3285725	24ACB360A31	CSPH*6012A**+TDR		56,500	11.0	13.0
4208592	24ACB360A31	FB4CNF060		57,000	11.0	13.0
3285726	24ACB360A31	FE4ANB006+UI		57,000	11.2	13.5
3404617	24ACB360A31	FV4CNB006		57,000	11.2	13.5
3752087	24ACB360A31	FX4DN(B,F)061		57,500	11.0	13.5
3046611	24ACB360A50	†CAP**6024A**+TDR		57,500	11.0	13.0
3046623	24ACB360A50	CAP**6021A**	58CV(A,X)110−20	56,000	11.0	13.2
3124082	24ACB360A50	CAP**6021A**	58ME(B,C)100−20	56,000	11.2	13.2
3046612	24ACB360A50	CAP**6021A**	58PH*090−16	55,500	11.0	13.0
3046613	24ACB360A50	CAP**6021A**	58PH*110−20	56,000	11.0	13.0
3046622	24ACB360A50	CAP**6021A**+TDR		56,500	11.0	13.0
3046624	24ACB360A50	CAP**6024A**	58CV(A,X)135−22	56,500	11.0	13.2
3046625	24ACB360A50	CAP**6024A**	58CV(A,X)155−22	56,500	11.2	13.5
3124083	24ACB360A50	CAP**6024A**	58ME(B,C)120−20	56,000	11.2	13.5
3046614	24ACB360A50	CAP**6024A**	58PH*135−20	56,000	11.0	13.0
3046630	24ACB360A50	CNPH*6024A**	58CV(A,X)135−22	56,000	11.2	13.5
3046631	24ACB360A50	CNPH*6024A**	58CV(A,X)155−22	56,500	11.2	13.5
3124085	24ACB360A50	CNPH*6024A**	58ME(B,C)080−16	55,500	11.0	13.0
3124086	24ACB360A50	CNPH*6024A**	58ME(B,C)100−20	55,500	11.2	13.2
3124087	24ACB360A50	CNPH*6024A**	58ME(B,C)120−20	56,000	11.2	13.5
3046616	24ACB360A50	CNPH*6024A**	58PH*090−16	55,500	11.0	13.0
3046617	24ACB360A50	CNPH*6024A**	58PH*110−20	56,000	11.0	13.0

See notes on page 45

COMBINATION RATINGS CONTINUED

AHRI Ref. No.	Model Number	Indoor Model	Furnace Model	Capacity	EER	SEER
3046618	24ACB360A50	CNPH*6024A**	58PH*135−20	56,000	11.0	13.0
3046629	24ACB360A50	CNPH*6024A**+TDR		56,000	11.0	13.0
3046627	24ACB360A50	CNPV*6024A**	58CV(A,X)135−22	56,000	11.0	13.5
3046628	24ACB360A50	CNPV*6024A**	58CV(A,X)155−22	56,500	11.2	13.5
3124084	24ACB360A50	CNPV*6024A**	58ME(B,C)120−20	56,000	11.2	13.5
3046615	24ACB360A50	CNPV*6024A**	58PH*135−20	56,000	11.0	13.0
3046626	24ACB360A50	CNPV*6024A**+TDR		57,000	11.0	13.0
3046633	24ACB360A50	CSPH*6012A**	58CV(A,X)110−20	55,500	11.0	13.2
3046634	24ACB360A50	CSPH*6012A**	58CV(A,X)135−22	55,500	11.2	13.5
3046635	24ACB360A50	CSPH*6012A**	58CV(A,X)155−22	55,500	11.2	13.5
3124088	24ACB360A50	CSPH*6012A**	58ME(B,C)080−16	55,500	11.0	13.2
3124089	24ACB360A50	CSPH*6012A**	58ME(B,C)100−20	56,000	11.2	13.2
3124090	24ACB360A50	CSPH*6012A**	58ME(B,C)120−20	56,000	11.2	13.5
3046619	24ACB360A50	CSPH*6012A**	58PH*090−16	56,000	11.0	13.0
3046620	24ACB360A50	CSPH*6012A**	58PH*110−20	56,500	11.5	13.5
3046621	24ACB360A50	CSPH*6012A**	58PH*135−20	56,000	11.0	13.0
3046632	24ACB360A50	CSPH*6012A**+TDR		56,500	11.0	13.0
4208612	24ACB360A50	FB4CNF060		57,000	11.0	13.0
3046637	24ACB360A50	FE4ANB006+UI		57,000	11.2	13.5
3404548	24ACB360A50	FV4CNB006		57,000	11.2	13.5
3046640	24ACB360A60	†CAP**6024A**+TDR		57,500	11.0	13.0
3046652	24ACB360A60	CAP**6021A**	58CV(A,X)110−20	56,000	11.0	13.2
3124186	24ACB360A60	CAP**6021A**	58ME(B,C)100−20	56,000	11.2	13.2
3046641	24ACB360A60	CAP**6021A**	58PH*090−16	55,500	11.0	13.0
3046642	24ACB360A60	CAP**6021A**	58PH*110−20	56,000	11.0	13.0
3046651	24ACB360A60	CAP**6021A**+TDR		56,500	11.0	13.0
3046653	24ACB360A60	CAP**6024A**	58CV(A,X)135−22	56,500	11.0	13.2
3046654	24ACB360A60	CAP**6024A**	58CV(A,X)155−22	56,500	11.2	13.5
3124187	24ACB360A60	CAP**6024A**	58ME(B,C)120−20	56,000	11.2	13.5
3046643	24ACB360A60	CAP**6024A**	58PH*135−20	56,000	11.0	13.0
3046659	24ACB360A60	CNPH*6024A**	58CV(A,X)135−22	56,000	11.2	13.5
3046660	24ACB360A60	CNPH*6024A**	58CV(A,X)155−22	56,500	11.2	13.5
3124189	24ACB360A60	CNPH*6024A**	58ME(B,C)080−16	55,500	11.0	13.0
3124190	24ACB360A60	CNPH*6024A**	58ME(B,C)100−20	55,500	11.2	13.2
3124191	24ACB360A60	CNPH*6024A**	58ME(B,C)120−20	56,000	11.2	13.5
3046645	24ACB360A60	CNPH*6024A**	58PH*090−16	55,500	11.0	13.0
3046646	24ACB360A60	CNPH*6024A**	58PH*110−20	56,000	11.0	13.0
3046647	24ACB360A60	CNPH*6024A**	58PH*135−20	56,000	11.0	13.0
3046658	24ACB360A60	CNPH*6024A**+TDR		56,000	11.0	13.0
3046656	24ACB360A60	CNPV*6024A**	58CV(A,X)135−22	56,000	11.0	13.5
3046657	24ACB360A60	CNPV*6024A**	58CV(A,X)155−22	56,500	11.2	13.5
3124188	24ACB360A60	CNPV*6024A**	58ME(B,C)120−20	56,000	11.2	13.5
3046644	24ACB360A60	CNPV*6024A**	58PH*135−20	56,000	11.0	13.0
3046655	24ACB360A60	CNPV*6024A**+TDR		57,000	11.0	13.0
3046662	24ACB360A60	CSPH*6012A**	58CV(A,X)110−20	55,500	11.0	13.2
3046663	24ACB360A60	CSPH*6012A**	58CV(A,X)135−22	55,500	11.2	13.5
3046664	24ACB360A60	CSPH*6012A**	58CV(A,X)155−22	55,500	11.2	13.5
3124192	24ACB360A60	CSPH*6012A**	58ME(B,C)080−16	55,500	11.0	13.2
3124193	24ACB360A60	CSPH*6012A**	58ME(B,C)100−20	56,000	11.2	13.2
3124194	24ACB360A60	CSPH*6012A**	58ME(B,C)120−20	56,000	11.2	13.5
3046648	24ACB360A60	CSPH*6012A**	58PH*090−16	56,000	11.0	13.0
3046649	24ACB360A60	CSPH*6012A**	58PH*110−20	56,500	11.5	13.5
3046650	24ACB360A60	CSPH*6012A**	58PH*135−20	56,000	11.0	13.0
3046661	24ACB360A60	CSPH*6012A**+TDR		56,500	11.0	13.0
4208641	24ACB360A60	FB4CNF060		57,000	11.0	13.0
3046666	24ACB360A60	FE4ANB006+UI		57,000	11.2	13.5
3404549	24ACB360A60	FV4CNB006		57,000	11.2	13.5

† Tested combination
EER — Energy Efficiency Ratio
SEER — Seasonal Energy Efficiency Ratio
TDR — Time−Delay Relay. In most cases, only 1 method should be used to achieve TDR function. Using more than 1 method in a system may cause degradation in performance. Use either the accessory Time−Delay Relay KAATD0101TDR or a furnace equipped with TDR. Most Carrier furnaces are equipped with TDR.
TXV — Thermostatic Expansion Valve
UI — User Interface

NOTES:
1. Ratings are net values reflecting the effects of circulating fan motor heat. Supplemental electric heat is not included.
2. Tested outdoor/indoor combinations have been tested in accordance with DOE test procedures for central air conditioners. Ratings for other combinations are determined under DOE computer simulation procedures.
3. Determine actual CFM values obtainable for your system by referring to fan performance data in fan coil or furnace coil literature.
4. Do not apply with capillary tube coils as performance and reliability are affected.

DETAILED COOLING CAPACITIES#

EVAPORATOR AIR		CONDENSER ENTERING AIR TEMPERATURES °F (°C)																	
		75 (23.9)			85 (29.4)			95 (35)			105 (40.6)			115 (46.1)			125 (51.7)		
CFM	EWB °F (°C)	Capacity MBtuh		Total Sys. KW**	Capacity MBtuh		Total Sys. KW**	Capacity MBtuh		Total Sys. KW**	Capacity MBtuh		Total Sys. KW**	Capacity MBtuh		Total Sys. KW**	Capacity MBtuh		Total Sys. KW**
		Total	Sens‡		Total	Sens‡		Total	Sens‡		Total	Sens‡		Total	Sens‡		Total	Sens‡	
24ACB318A30 Outdoor Section With 18 Indoor Section																			
525	72 (22.2)	20.46	10.76	1.21	19.55	10.41	1.36	18.59	10.05	1.53	17.62	9.69	1.71	16.57	9.30	1.91	15.40	8.88	2.13
	67 (19.4)	18.79	13.26	1.22	17.95	12.90	1.37	17.05	12.52	1.53	16.12	12.14	1.72	15.13	11.74	1.92	14.03	11.30	2.13
	62 (16.7)	17.27	15.73	1.22	16.49	15.36	1.37	15.68	14.97	1.54	14.83	14.55	1.72	14.00	14.00	1.92	13.15	13.15	2.13
	57 (13.9)	16.78	16.78	1.23	16.15	16.15	1.37	15.48	15.48	1.54	14.77	14.77	1.72	14.00	14.00	1.92	13.15	13.15	2.13
600	72 (22.2)	20.79	11.28	1.24	19.83	10.92	1.39	18.83	10.55	1.56	17.83	10.19	1.74	16.76	9.80	1.94	15.55	9.37	2.16
	67 (19.4)	19.11	14.10	1.25	18.23	13.73	1.40	17.30	13.36	1.56	16.35	12.97	1.74	15.33	12.57	1.94	14.20	12.12	2.16
	62 (16.7)	17.66	16.88	1.25	16.87	16.49	1.40	16.06	16.06	1.56	15.32	15.32	1.75	14.51	14.51	1.94	13.61	13.61	2.16
	57 (13.9)	17.46	17.46	1.25	16.79	16.79	1.40	16.07	16.07	1.56	15.32	15.32	1.75	14.51	14.51	1.94	13.61	13.61	2.16
675	72 (22.2)	21.03	11.77	1.27	20.02	11.40	1.42	18.99	11.03	1.58	17.97	10.67	1.77	16.88	10.28	1.97	15.65	9.85	2.18
	67 (19.4)	19.33	14.90	1.27	18.43	14.54	1.42	17.48	14.15	1.59	16.51	13.77	1.77	15.48	13.35	1.97	14.33	12.89	2.19
	62 (16.7)	18.01	17.91	1.28	17.30	17.30	1.43	16.54	16.54	1.59	15.76	15.76	1.77	14.92	14.92	1.97	13.97	13.97	2.19
	57 (13.9)	18.01	18.01	1.28	17.30	17.30	1.43	16.55	16.55	1.59	15.76	15.76	1.77	14.92	14.92	1.97	13.97	13.97	2.19

COOLING INDOOR MODEL	CAPACITY	POWER	FURNACE MODEL
*CAP**1814A**	1.00	1.00	
CAP**2414A**	1.01	1.01	
CAP**2417A**	1.01	1.01	
CAP**3619A**	1.01	1.01	
CNPF*2418A**	1.01	0.99	
CNPH*2417A**	1.00	1.00	
CNPV*1814A**	0.99	0.99	
CNPV*1917A**	1.02	1.02	
CNPV*2414A**	1.00	1.00	
CNPV*2417A**	1.00	1.00	
CSPH*2412A**	0.97	0.97	
FB4CNF018	0.99	0.99	
FB4CNF018	0.99	0.99	
FB4CNF024	0.99	0.99	
FB4CNF024	0.99	0.99	
FE4ANF002	1.02	0.93	
FF1ENP018	0.99	0.99	
FF1ENP019	1.01	0.91	
FF1ENP024	1.01	1.01	
FF1ENP025	1.02	0.92	
FV4BNF002	1.02	0.90	
FV4CNF002	1.02	0.93	
FX4CNF018	1.01	0.93	
FX4CNF024	1.02	0.92	
FX4DN(B,F)031	1.02	0.93	
FX4DNF019	1.02	0.93	
FX4DNF025	1.02	0.93	
FY5BNF018	0.99	0.99	
FY5BNF018	0.99	0.99	
FY5BNF024	0.99	0.99	
FY5BNF024	0.99	0.99	
CAP**1814A**	0.98	0.92	58CV(A,X)070–12
CAP**2414A**	1.00	0.94	58CV(A,X)070–12
CNPH*2417A**	0.99	0.93	58CV(A,X)070–12
CNPV*1814A**	0.98	0.92	58CV(A,X)070–12
CNPV*2414A**	0.99	0.93	58CV(A,X)070–12
CSPH*2412A**	0.95	0.89	58CV(A,X)070–12
CAP**2417A**	1.01	0.95	58CV(A,X)090–16

COOLING INDOOR MODEL	CAPACITY	POWER	FURNACE MODEL
CNPH*2417A**	0.99	0.93	58CV(A,X)090–16
CNPV*1917A**	1.02	0.93	58CV(A,X)090–16
CNPV*2417A**	0.99	0.93	58CV(A,X)090–16
CSPH*2412A**	0.95	0.90	58CV(A,X)090–16
CNPH*2417A**	1.02	0.92	58HDV040––12
CNPV*2417A**	1.02	0.92	58HDV040––12
CSPH*2412A**	1.04	0.95	58HDV040––12
CNPH*2417A**	1.02	0.92	58HDV060––12
CNPV*2417A**	1.02	0.92	58HDV060––12
CSPH*2412A**	1.04	0.95	58HDV060––12
CAP**2417A**	1.03	0.91	58ME(B,C)040–12
CNPH*2417A**	1.02	0.90	58ME(B,C)040–12
CNPV*2417A**	1.02	0.90	58ME(B,C)040–12
CSPH*2412A**	1.03	0.91	58ME(B,C)040–12
CAP**2417A**	1.02	0.90	58ME(B,C)060–12
CNPH*2417A**	1.01	0.89	58ME(B,C)060–12
CNPV*2417A**	1.01	0.89	58ME(B,C)060–12
CSPH*2412A**	1.01	0.91	58ME(B,C)060–12
CAP**2417A**	1.03	0.91	58MEB040–12
CNPH*2417A**	1.02	0.90	58MEB040–12
CNPV*1917A**	1.02	0.93	58MEB040–12
CNPV*2417A**	1.02	0.90	58MEB040–12
CSPH*2412A**	1.03	0.91	58MEB040–12
CNPH*2417A**	0.99	0.93	58MV(B,C)040–14
CSPH*2412A**	0.95	0.90	58MV(B,C)040–14
CAP**2417A**	1.00	0.94	58MV(B,C)060–14
CNPH*2417A**	0.99	0.93	58MV(B,C)060–14
CNPV*1917A**	1.02	0.93	58MV(B,C)060–14
CNPV*2417A**	0.99	0.93	58MV(B,C)060–14
CSPH*2412A**	0.95	0.90	58MV(B,C)060–14
CNPH*2417A**	0.99	0.93	58MV(B,C)080–14
CSPH*2412A**	0.95	0.90	58MV(B,C)080–14
CAP**1814A**	1.00	0.90	58PH*045–08
CAP**2414A**	1.02	0.92	58PH*045–08
CNPH*2417A**	1.02	0.92	58PH*045–08
CNPV*1814A**	1.00	0.90	58PH*045–08
CNPV*2414A**	1.02	0.92	58PH*045–08
CSPH*2412A**	1.02	0.92	58PH*045–08

COOLING INDOOR MODEL	CAPACITY	POWER	FURNACE MODEL
CAP**2417A**	1.00	0.94	58UVB060–14
CAP**2417A**	1.00	0.94	58UVB060–14
CNPV*1917A**	1.02	0.93	58UVB060–14
CNPV*1917A**	1.02	0.93	58UVB060–14
CNPV*2417A**	0.99	0.93	58UVB060–14
CNPV*2417A**	0.99	0.93	58UVB060–14
CAP**2417A**	1.01	0.89	58VLR105–12
CNPH*2417A**	1.01	0.89	58VLR105–12
CNPV*1917A**	1.02	0.90	58VLR105–12
CNPV*2417A**	1.01	0.89	58VLR105–12
CSPH*2412A**	1.02	0.90	58VLR105–12
CAP**2417A**	1.01	0.91	58VMR105–12
CNPH*2417A**	0.99	0.90	58VMR105–12
CNPV*1917A**	1.01	0.91	58VMR105–12
CNPV*2417A**	0.99	0.90	58VMR105–12
CSPH*2412A**	1.01	0.91	58VMR105–12
CAP**2417A**	1.00	0.85	59*N*A060V17**14
CNPH*2417A**	1.00	0.85	59*N*A060V17**14
CNPV*1917A**	1.01	0.85	59*N*A060V17**14
CNPV*2417A**	1.00	0.85	59*N*A060V17**14
CSPH*2412A**	1.01	0.86	59*N*A060V17**14
CAP**2417A**	0.99	0.84	59*N*A080V17**14
CNPH*2417A**	0.99	0.84	59*N*A080V17**14
CNPV*1917A**	1.01	0.85	59*N*A080V17**14
CNPV*2417A**	0.99	0.84	59*N*A080V17**14
CSPH*2412A**	1.01	0.85	59*N*A080V17**14
CAP**1814A**	0.98	0.87	59*P5A040E14**10
CAP**2414A**	0.99	0.86	59*P5A040E14**10
CAP**2417A**	1.00	0.87	59*P5A040E14**10
CNPH*2417A**	0.99	0.86	59*P5A040E14**10
CNPV*1814A**	0.98	0.87	59*P5A040E14**10
CNPV*1917A**	1.01	0.87	59*P5A040E14**10
CNPV*2414A**	0.99	0.86	59*P5A040E14**10
CNPV*2417A**	0.99	0.86	59*P5A040E14**10
CSPH*2412A**	0.99	0.86	59*P5A040E14**10
CAP**2417A**	1.01	0.91	OVLAAB036098
CNPH*2417A**	1.01	0.91	OVLAAB036098
CNPV*1917A**	1.02	0.92	OVLAAB036098

DETAILED COOLING CAPACITIES# CONTINUED

24ACB318A30 Outdoor Section With 18 Indoor Section

COOLING INDOOR MODEL	CAPACITY	POWER	FURNACE MODEL
CNPV*2417A**	1.01	0.91	OVLAAB036098
CSPH*2412A**	1.02	0.92	OVLAAB036098
CAP**2417A**	1.02	0.92	OVMAAB036098
CNPH*2417A**	1.02	0.92	OVMAAB036098
CNPV*1917A**	1.02	0.92	OVMAAB036098
CNPV*2417A**	1.02	0.92	OVMAAB036098
CSPH*2412A**	1.02	0.92	OVMAAB036098

See notes on pg. 62

DETAILED COOLING CAPACITIES# CONTINUED

EVAPORATOR AIR		CONDENSER ENTERING AIR TEMPERATURES °F (°C)																	
		75 (23.9)			85 (29.4)			95 (35)			105 (40.6)			115 (46.1)			125 (51.7)		
CFM	EWB °F (°C)	Capacity MBtuh		Total Sys. KW**	Capacity MBtuh		Total Sys. KW**	Capacity MBtuh		Total Sys. KW**	Capacity MBtuh		Total Sys. KW**	Capacity MBtuh		Total Sys. KW**	Capacity MBtuh		Total Sys. KW**
		Total	Sens‡		Total	Sens‡		Total	Sens‡		Total	Sens‡		Total	Sens‡		Total	Sens‡	
24ACB324A30 Outdoor Section With 24 Indoor Section																			
700	72 (22.2)	27.11	14.29	1.61	25.97	13.86	1.81	24.75	13.40	2.03	23.47	12.92	2.28	22.09	12.41	2.55	20.55	11.85	2.84
	67 (19.4)	24.89	17.62	1.61	23.81	17.16	1.81	22.66	16.68	2.03	21.45	16.19	2.28	20.15	15.66	2.55	18.73	15.09	2.85
	62 (16.7)	22.86	20.91	1.61	21.86	20.44	1.81	20.81	19.93	2.04	19.72	19.39	2.28	18.65	18.65	2.56	17.57	17.57	2.86
	57 (13.9)	22.24	22.24	1.61	21.43	21.43	1.82	20.56	20.56	2.04	19.64	19.64	2.28	18.65	18.65	2.56	17.57	17.57	2.86
800	72 (22.2)	27.54	14.98	1.64	26.35	14.54	1.84	25.08	14.08	2.06	23.76	13.60	2.31	22.34	13.09	2.58	20.75	12.52	2.88
	67 (19.4)	25.31	18.74	1.64	24.19	18.29	1.85	23.00	17.81	2.07	21.75	17.31	2.31	20.42	16.77	2.59	18.96	16.19	2.88
	62 (16.7)	23.37	22.46	1.65	22.36	21.95	1.85	21.35	21.35	2.07	20.38	20.38	2.32	19.33	19.33	2.59	18.18	18.18	2.89
	57 (13.9)	23.14	23.14	1.65	22.28	22.28	1.85	21.36	21.36	2.07	20.38	20.38	2.32	19.33	19.33	2.59	18.18	18.18	2.89
900	72 (22.2)	27.83	15.64	1.68	26.61	15.19	1.88	25.31	14.72	2.10	23.96	14.25	2.34	22.50	13.73	2.61	20.87	13.16	2.91
	67 (19.4)	25.61	19.83	1.68	24.46	19.37	1.88	23.25	18.88	2.10	21.97	18.37	2.35	20.61	17.83	2.62	19.12	17.24	2.92
	62 (16.7)	23.85	23.85	1.68	22.96	22.96	1.88	22.00	22.00	2.10	20.98	20.98	2.35	19.87	19.87	2.62	18.66	18.66	2.92
	57 (13.9)	23.87	23.87	1.68	22.97	22.97	1.88	22.00	22.00	2.10	20.98	20.98	2.35	19.87	19.87	2.62	18.66	18.66	2.92

COOLING INDOOR MODEL	CAPACITY	POWER	FURNACE MODEL
*CAP**2414A**	1.00	1.00	
CAP**2417A**	0.99	0.99	
CAP**3014A**	1.00	1.00	
CAP**3017A**	1.00	1.00	
CAP**3619A**	1.00	1.00	
CNPF*2418A**	0.98	0.98	
CNPH*2417A**	0.98	0.98	
CNPH*2417A**	0.98	0.98	
CNPH*3017A**	0.99	0.99	
CNPH*3117A**	1.02	1.02	
CNPV*2414A**	0.98	0.98	
CNPV*2417A**	0.98	0.98	
CNPV*3014A**	0.99	0.99	
CNPV*3017A**	0.99	0.99	
CNPV*3117A**	1.02	1.02	
CSPH*2412A**	0.96	0.96	
CSPH*3012A**	0.96	0.96	
FB4CNF024	1.00	1.00	
FB4CNF024	0.98	0.98	
FB4CNF030	1.00	1.00	
FB4CNF030	1.00	1.00	
FE4AN(B,F)003	1.00	0.94	
FE4ANF002	1.00	0.94	
FF1ENP024	0.98	0.99	
FF1ENP025	0.99	0.91	
FF1ENP030	0.98	0.98	
FF1ENP031	1.00	0.94	
FV4BN(B,F)003	1.00	0.90	
FV4BNF002	1.00	0.90	
FV4CN(B,F)003	1.00	0.92	
FV4CNF002	1.00	0.94	
FX4CNF024	1.00	0.94	
FX4CNF030	1.01	0.92	
FX4DN(B,F)031	1.01	0.96	
FX4DN(B,F)037	1.02	0.93	
FX4DNF025	1.01	0.92	
FY5BNF024	1.00	1.00	
FY5BNF024	1.00	1.00	

COOLING INDOOR MODEL	CAPACITY	POWER	FURNACE MODEL
FY5BNF030	1.00	1.00	
FY5BNF030	1.00	1.00	
CAP**2414A**	0.98	0.94	58CV(A,X)070–12
CAP**3014A**	0.99	0.95	58CV(A,X)070–12
CNPH*2417A**	0.97	0.93	58CV(A,X)070–12
CNPH*3017A**	0.98	0.92	58CV(A,X)070–12
CNPH*3117A**	1.01	0.92	58CV(A,X)070–12
CNPV*2414A**	0.97	0.93	58CV(A,X)070–12
CNPV*3014A**	0.98	0.97	58CV(A,X)070–12
CSPH*2412A**	0.95	0.91	58CV(A,X)070–12
CSPH*3012A**	0.95	0.89	58CV(A,X)070–12
CAP**2417A**	0.98	0.92	58CV(A,X)090–16
CAP**3017A**	0.99	0.93	58CV(A,X)090–16
CNPH*3117A**	1.02	0.93	58CV(A,X)090–16
CNPV*2417A**	0.97	0.93	58CV(A,X)090–16
CNPV*3017A**	0.98	0.92	58CV(A,X)090–16
CNPV*3117A**	1.02	0.93	58CV(A,X)090–16
CSPH*2412A**	0.95	0.89	58CV(A,X)090–16
CSPH*3012A**	0.96	0.90	58CV(A,X)090–16
CNPH*3117A**	1.02	0.93	58CV(A,X)110–20
CSPH*2412A**	0.95	0.91	58CV(A,X)110–20
CSPH*3012A**	0.96	0.90	58CV(A,X)110–20
CNPH*3117A**	1.02	0.93	58CV(A,X)135–22
CSPH*2412A**	0.95	0.91	58CV(A,X)135–22
CSPH*3012A**	0.96	0.90	58CV(A,X)135–22
CNPH*3117A**	1.02	0.93	58CV(A,X)155–22
CSPH*3012A**	0.96	0.90	58CV(A,X)155–22
CAP**3619A**	1.01	0.96	58HDV040–-12
CNPH*2417A**	0.98	0.92	58HDV040–-12
CNPH*3017A**	1.00	0.92	58HDV040–-12
CNPH*3117A**	1.02	0.93	58HDV040–-12
CNPV*2417A**	0.98	0.92	58HDV040–-12
CNPV*3017A**	1.00	0.92	58HDV040–-12
CNPV*3117A**	1.02	0.93	58HDV040–-12
CSPH*2412A**	1.00	0.96	58HDV040–-12
CSPH*3012A**	1.01	0.96	58HDV040–-12
CAP**3619A**	1.01	0.96	58HDV060–-12
CNPH*2417A**	0.99	0.93	58HDV060–-12

COOLING INDOOR MODEL	CAPACITY	POWER	FURNACE MODEL
CNPH*3017A**	1.01	0.92	58HDV060–-12
CNPH*3117A**	1.02	0.93	58HDV060–-12
CNPV*2417A**	0.99	0.93	58HDV060–-12
CNPV*3017A**	1.01	0.92	58HDV060–-12
CNPV*3117A**	1.03	0.93	58HDV060–-12
CSPH*2412A**	1.00	0.96	58HDV060–-12
CSPH*3012A**	1.01	0.96	58HDV060–-12
CNPH*2417A**	1.00	0.94	58HDV080–-20
CNPH*3017A**	1.03	0.94	58HDV080–-20
CSPH*2412A**	1.00	0.96	58HDV080–-20
CSPH*3012A**	1.01	0.96	58HDV080–-20
CNPH*3117A**	1.02	0.93	58HDV100–-20
CSPH*2412A**	1.00	0.96	58HDV100–-20
CSPH*3012A**	1.01	0.96	58HDV100–-20
CNPH*3117A**	1.02	0.93	58ME(B,C)040–12
CNPV*3117A**	1.02	0.93	58ME(B,C)040–12
CAP**2417A**	1.00	0.90	58ME(B,C)060–12
CAP**3017A**	1.02	0.92	58ME(B,C)060–12
CNPH*2417A**	0.99	0.91	58ME(B,C)060–12
CNPH*3017A**	1.02	0.92	58ME(B,C)060–12
CNPV*2417A**	0.99	0.91	58ME(B,C)060–12
CNPV*3017A**	1.02	0.92	58ME(B,C)060–12
CSPH*2412A**	1.00	0.90	58ME(B,C)060–12
CSPH*3012A**	1.01	0.91	58ME(B,C)060–12
CAP**2417A**	0.99	0.89	58ME(B,C)080–12
CAP**3017A**	1.01	0.91	58ME(B,C)080–12
CNPH*2417A**	0.99	0.91	58ME(B,C)080–12
CNPH*3017A**	1.01	0.91	58ME(B,C)080–12
CNPV*2417A**	0.99	0.91	58ME(B,C)080–12
CNPV*3017A**	1.01	0.91	58ME(B,C)080–12
CSPH*2412A**	0.99	0.89	58ME(B,C)080–12
CSPH*3012A**	1.01	0.91	58ME(B,C)080–12
CAP**2417A**	1.00	0.90	58MEB040–12
CAP**3017A**	1.01	0.91	58MEB040–12
CNPH*2417A**	0.99	0.91	58MEB040–12
CNPH*3017A**	1.01	0.91	58MEB040–12
CNPV*2417A**	0.99	0.91	58MEB040–12
CNPV*3017A**	1.01	0.91	58MEB040–12

DETAILED COOLING CAPACITIES# CONTINUED

24ACB324A30 Outdoor Section With 24 Indoor Section

COOLING INDOOR MODEL	CAPACITY	POWER	FURNACE MODEL
CSPH*2412A**	1.00	0.90	58MEB040–12
CSPH*3012A**	1.01	0.91	58MEB040–12
CNPH*3117A**	1.02	0.93	58MEC060–12
CNPV*3117A**	1.02	0.93	58MEC060–12
CNPH*3117A**	1.02	0.93	58MEC080–12
CNPV*3117A**	1.02	0.93	58MEC080–12
CNPH*2417A**	0.97	0.93	58MV(B,C)040–14
CNPH*3017A**	0.98	0.92	58MV(B,C)040–14
CSPH*2412A**	0.95	0.91	58MV(B,C)040–14
CSPH*3012A**	0.96	0.90	58MV(B,C)040–14
CAP**2417A**	0.98	0.94	58MV(B,C)060–14
CAP**3017A**	0.99	0.93	58MV(B,C)060–14
CNPH*2417A**	0.97	0.93	58MV(B,C)060–14
CNPH*3117A**	1.02	0.93	58MV(B,C)060–14
CNPV*2417A**	0.97	0.93	58MV(B,C)060–14
CNPV*3017A**	0.98	0.92	58MV(B,C)060–14
CNPV*3117A**	1.02	0.93	58MV(B,C)060–14
CSPH*2412A**	0.95	0.91	58MV(B,C)060–14
CSPH*3012A**	0.95	0.89	58MV(B,C)060–14
CAP**2417A**	0.97	0.93	58MV(B,C)080–14
CNPH*3117A**	1.01	0.92	58MV(B,C)080–14
CSPH*3012A**	0.96	0.90	58MV(B,C)080–14
CNPH*3117A**	1.00	0.92	58MV(B,C)080–20
CSPH*3012A**	0.95	0.89	58MV(B,C)080–20
CNPH*3117A**	1.02	0.93	58MV(B,C)100–20
CSPH*3012A**	0.96	0.90	58MV(B,C)100–20
CNPH*3117A**	1.02	0.93	58MV(B,C)120–20
CSPH*3012A**	0.95	0.89	58MV(B,C)120–20
CNPH*3117A**	1.02	0.93	58MVB040–14
CAP**2414A**	0.98	0.90	58PH*045–08
CAP**3014A**	1.00	0.92	58PH*045–08
CNPH*2417A**	0.98	0.90	58PH*045–08
CNPH*3017A**	1.00	0.92	58PH*045–08
CNPH*3117A**	1.02	0.93	58PH*045–08
CNPV*2414A**	0.98	0.90	58PH*045–08
CNPV*3014A**	0.99	0.91	58PH*045–08
CSPH*2412A**	0.99	0.91	58PH*045–08
CSPH*3012A**	1.00	0.92	58PH*045–08
CAP**2417A**	0.98	0.94	58UVB060–14
CAP**2417A**	0.98	0.94	58UVB060–14
CAP**3017A**	0.99	0.93	58UVB060–14
CAP**3017A**	0.99	0.93	58UVB060–14
CNPV*2417A**	0.97	0.93	58UVB060–14
CNPV*2417A**	0.97	0.93	58UVB060–14
CNPV*3017A**	0.98	0.92	58UVB060–14
CNPV*3017A**	0.98	0.92	58UVB060–14
CNPV*3117A**	1.02	0.93	58UVB060–14
CNPV*3117A**	1.02	0.93	58UVB060–14
CAP**2417A**	0.97	0.93	58UVB080–14
CAP**2417A**	0.99	0.89	58VLR105–12
CAP**3017A**	1.00	0.90	58VLR105–12
CNPH*2417A**	0.98	0.90	58VLR105–12
CNPH*3017A**	1.00	0.90	58VLR105–12
CNPH*3117A**	1.02	0.92	58VLR105–12

COOLING INDOOR MODEL	CAPACITY	POWER	FURNACE MODEL
CNPV*2417A**	0.98	0.90	58VLR105–12
CNPV*3017A**	1.00	0.90	58VLR105–12
CNPV*3117A**	1.02	0.92	58VLR105–12
CSPH*2412A**	1.00	0.90	58VLR105–12
CSPH*3012A**	1.00	0.90	58VLR105–12
CAP**2417A**	0.97	0.89	58VMR105–12
CAP**3017A**	0.98	0.89	58VMR105–12
CNPH*2417A**	0.97	0.89	58VMR105–12
CNPH*3017A**	0.99	0.89	58VMR105–12
CNPH*3117A**	1.00	0.90	58VMR105–12
CNPV*2417A**	0.97	0.89	58VMR105–12
CNPV*3017A**	0.99	0.89	58VMR105–12
CNPV*3117A**	1.00	0.90	58VMR105–12
CSPH*2412A**	0.98	0.90	58VMR105–12
CSPH*3012A**	0.99	0.89	58VMR105–12
CAP**2417A**	0.97	0.91	59*N*A060V17**14
CAP**3017A**	0.99	0.91	59*N*A060V17**14
CNPH*2417A**	0.97	0.91	59*N*A060V17**14
CNPH*3017A**	0.99	0.91	59*N*A060V17**14
CNPH*3117A**	1.01	0.92	59*N*A060V17**14
CNPV*2417A**	0.97	0.91	59*N*A060V17**14
CNPV*3017A**	0.99	0.91	59*N*A060V17**14
CNPV*3117A**	1.01	0.92	59*N*A060V17**14
CSPH*2412A**	0.99	0.92	59*N*A060V17**14
CSPH*3012A**	0.99	0.91	59*N*A060V17**14
CAP**2417A**	0.97	0.89	59*N*A080V17**14
CAP**3017A**	0.98	0.90	59*N*A080V17**14
CNPH*2417A**	0.97	0.91	59*N*A080V17**14
CNPH*3017A**	0.98	0.90	59*N*A080V17**14
CNPH*3117A**	1.00	0.92	59*N*A080V17**14
CNPV*2417A**	0.97	0.91	59*N*A080V17**14
CNPV*3017A**	0.98	0.90	59*N*A080V17**14
CNPV*3117A**	1.00	0.92	59*N*A080V17**14
CSPH*2412A**	0.98	0.90	59*N*A080V17**14
CSPH*3012A**	0.99	0.91	59*N*A080V17**14
CNPH*2417A**	0.98	0.92	59*N*A100V21**20
CNPH*3017A**	1.00	0.92	59*N*A100V21**20
CNPH*3117A**	1.02	0.90	59*N*A100V21**20
CSPH*2412A**	1.00	0.92	59*N*A100V21**20
CSPH*3012A**	1.00	0.92	59*N*A100V21**20
CNPH*2417A**	0.98	0.90	59*N*A120V24**22
CNPH*3017A**	1.00	0.92	59*N*A120V24**22
CNPH*3117A**	1.01	0.89	59*N*A120V24**22
CSPH*2412A**	0.99	0.91	59*N*A120V24**22
CSPH*3012A**	1.00	0.92	59*N*A120V24**22
CAP**2414A**	0.98	0.98	59*P5A040E14**10
CAP**2417A**	0.98	0.98	59*P5A040E14**10
CAP**3014A**	0.99	0.97	59*P5A040E14**10
CAP**3017A**	1.00	0.98	59*P5A040E14**10
CNPH*2417A**	0.98	0.98	59*P5A040E14**10
CNPH*3017A**	1.00	0.98	59*P5A040E14**10
CNPH*3117A**	1.02	0.98	59*P5A040E14**10
CNPV*2414A**	0.98	0.98	59*P5A040E14**10
CNPV*2417A**	0.98	0.98	59*P5A040E14**10

COOLING INDOOR MODEL	CAPACITY	POWER	FURNACE MODEL
CNPV*3014A**	0.99	0.97	59*P5A040E14**10
CNPV*3017A**	1.00	0.98	59*P5A040E14**10
CNPV*3117A**	1.02	0.98	59*P5A040E14**10
CSPH*2412A**	0.99	0.97	59*P5A040E14**10
CSPH*3012A**	1.00	0.98	59*P5A040E14**10
CAP**2417A**	0.98	0.90	59*P5A060E17**14
CAP**3017A**	0.99	0.91	59*P5A060E17**14
CNPH*2417A**	0.97	0.91	59*P5A060E17**14
CNPH*3017A**	0.99	0.91	59*P5A060E17**14
CNPH*3117A**	1.01	0.89	59*P5A060E17**14
CNPV*2417A**	0.97	0.91	59*P5A060E17**14
CNPV*3017A**	0.99	0.91	59*P5A060E17**14
CNPV*3117A**	1.01	0.89	59*P5A060E17**14
CSPH*2412A**	0.98	0.90	59*P5A060E17**14
CSPH*3012A**	0.99	0.91	59*P5A060E17**14
CAP**2417A**	0.99	0.91	OVLAAB036098
CAP**3017A**	1.00	0.90	OVLAAB036098
CNPH*2417A**	0.98	0.90	OVLAAB036098
CNPH*3017A**	1.00	0.90	OVLAAB036098
CNPH*3117A**	1.02	0.92	OVLAAB036098
CNPV*2417A**	0.98	0.90	OVLAAB036098
CNPV*3017A**	1.00	0.90	OVLAAB036098
CNPV*3117A**	1.02	0.92	OVLAAB036098
CSPH*2412A**	1.00	0.92	OVLAAB036098
CSPH*3012A**	1.00	0.92	OVLAAB036098
CAP**2417A**	0.99	0.91	OVMAAB036098
CAP**3017A**	1.00	0.92	OVMAAB036098
CNPH*2417A**	0.98	0.92	OVMAAB036098
CNPH*3017A**	1.00	0.92	OVMAAB036098
CNPH*3117A**	1.02	0.92	OVMAAB036098
CNPV*2417A**	0.98	0.92	OVMAAB036098
CNPV*3017A**	1.00	0.92	OVMAAB036098
CNPV*3117A**	1.02	0.92	OVMAAB036098
CSPH*2412A**	1.00	0.92	OVMAAB036098
CSPH*3012A**	1.00	0.92	OVMAAB036098
CAP**2417A**	0.98	0.89	OVMAAB042112
CAP**3017A**	0.99	0.89	OVMAAB042112
CNPH*2417A**	0.98	0.90	OVMAAB042112
CNPH*3017A**	0.99	0.89	OVMAAB042112
CNPH*3117A**	1.01	0.91	OVMAAB042112
CNPV*2417A**	0.98	0.90	OVMAAB042112
CNPV*3017A**	0.99	0.89	OVMAAB042112
CNPV*3117A**	1.01	0.91	OVMAAB042112
CSPH*2412A**	0.99	0.91	OVMAAB042112
CSPH*3012A**	1.00	0.90	OVMAAB042112

See notes on pg. 62

DETAILED COOLING CAPACITIES# CONTINUED

EVAPORATOR AIR		CONDENSER ENTERING AIR TEMPERATURES °F (°C)																	
		75 (23.9)			85 (29.4)			95 (35)			105 (40.6)			115 (46.1)			125 (51.7)		
CFM	EWB °F (°C)	Capacity MBtuh		Total Sys. KW**	Capacity MBtuh		Total Sys. KW**	Capacity MBtuh		Total Sys. KW**	Capacity MBtuh		Total Sys. KW**	Capacity MBtuh		Total Sys. KW**	Capacity MBtuh		Total Sys. KW**
		Total	Sens‡		Total	Sens‡		Total	Sens‡		Total	Sens‡		Total	Sens‡		Total	Sens‡	
24ACB330A30 Outdoor Section With 30 Indoor Section																			
875	72 (22.2)	33.13	17.60	2.01	31.70	17.06	2.23	30.20	16.49	2.47	28.59	15.90	2.75	26.87	15.27	3.06	25.01	14.60	3.38
	67 (19.4)	30.12	21.64	2.01	28.78	21.09	2.23	27.37	20.50	2.48	25.87	19.89	2.76	24.27	19.25	3.07	22.59	18.58	3.42
	62 (16.7)	27.50	25.68	2.01	26.29	25.09	2.23	25.03	24.47	2.48	23.75	23.75	2.77	22.56	22.56	3.08	21.27	21.27	3.43
	57 (13.9)	26.93	26.93	2.01	25.94	25.94	2.24	24.89	24.89	2.48	23.76	23.76	2.77	22.56	22.56	3.08	21.27	21.27	3.43
1000	72 (22.2)	33.69	18.46	2.05	32.21	17.92	2.27	30.64	17.34	2.52	28.98	16.74	2.80	27.20	16.10	3.11	25.32	15.44	3.45
	67 (19.4)	30.64	23.04	2.05	29.26	22.48	2.27	27.80	21.89	2.52	26.25	21.27	2.80	24.61	20.61	3.12	22.87	19.92	3.46
	62 (16.7)	28.16	27.55	2.06	26.95	26.95	2.28	25.86	25.86	2.53	24.67	24.67	2.81	23.39	23.39	3.12	22.02	22.02	3.47
	57 (13.9)	28.03	28.03	2.06	26.98	26.98	2.28	25.86	25.86	2.53	24.67	24.67	2.81	23.39	23.39	3.12	22.02	22.02	3.47
1125	72 (22.2)	34.09	19.27	2.10	32.57	18.72	2.32	30.96	18.14	2.56	29.26	17.54	2.84	27.43	16.89	3.15	25.50	16.22	3.49
	67 (19.4)	31.03	24.36	2.10	29.61	23.80	2.32	28.12	23.20	2.57	26.54	22.57	2.85	24.86	21.90	3.16	23.10	21.19	3.50
	62 (16.7)	28.94	28.94	2.10	27.83	27.83	2.32	26.66	26.66	2.57	25.40	25.40	2.85	24.06	24.06	3.16	22.61	22.61	3.48
	57 (13.9)	28.94	28.94	2.10	27.83	27.83	2.32	26.66	26.66	2.57	25.41	25.41	2.85	24.06	24.06	3.16	22.62	22.62	3.51

COOLING INDOOR MODEL	CAPACITY	POWER	FURNACE MODEL
*CAP**3014A**	1.00	1.00	
CAP**3017A**	1.00	1.00	
CAP**3614A**	1.00	1.00	
CAP**3617A**	1.00	1.00	
CAP**3619A**	1.00	1.00	
CAP**3621A**	1.00	1.00	
CAP**4823A**	1.00	1.00	
CNPF*3618A**	0.99	0.99	
CNPH*3017A**	0.99	0.99	
CNPH*3117A**	1.01	1.01	
CNPH*3617A**	0.99	0.99	
CNPV*3014A**	0.99	0.99	
CNPV*3017A**	0.99	0.99	
CNPV*3117A**	1.01	1.01	
CNPV*3617A**	0.99	0.99	
CNPV*3621A**	0.99	0.99	
CNPV*3717A**	1.01	1.01	
CSPH*3012A**	0.96	0.96	
CSPH*3612A**	0.98	0.98	
FB4CNF030	0.96	0.96	
FB4CNF030	0.96	0.96	
FB4CNF036	0.96	0.96	
FB4CNF036	0.96	0.96	
FE4AN(B,F)003	1.00	0.94	
FE4AN(B,F)005	1.03	0.94	
FE4ANF002	0.99	0.95	
FF1ENP030	0.98	0.98	
FF1ENP031	1.00	0.94	
FF1ENP036	1.00	1.00	
FF1ENP037	1.01	0.96	
FV4BN(B,F)003	1.00	0.92	
FV4BN(B,F)005	1.03	0.91	
FV4BNF002	0.99	0.93	
FV4CN(B,F)003	1.00	0.94	
FV4CN(B,F)005	1.03	0.94	
FV4CNF002	0.99	0.95	
FX4CN(B,F)036	1.01	0.95	
FX4CNF030	1.00	0.96	

COOLING INDOOR MODEL	CAPACITY	POWER	FURNACE MODEL
FX4DN(B,F)031	1.01	0.92	
FX4DN(B,F)037	1.02	0.94	
FX4DN(B,F)043	1.02	0.98	
FY4ANF036	0.99	1.01	
FY5BNF030	0.96	0.96	
FY5BNF030	0.96	0.96	
FY5BNF036	0.96	0.96	
FY5BNF036	0.96	0.96	
CAP**3014A**	0.99	0.97	58CV(A,X)070–12
CAP**3614A**	0.99	0.94	58CV(A,X)070–12
CNPH*3017A**	0.98	0.94	58CV(A,X)070–12
CNPH*3117A**	1.01	0.92	58CV(A,X)070–12
CNPH*3617A**	0.98	0.94	58CV(A,X)070–12
CNPV*3014A**	0.98	0.96	58CV(A,X)070–12
CSPH*3012A**	0.96	0.92	58CV(A,X)070–12
CSPH*3612A**	0.97	0.93	58CV(A,X)070–12
CAP**3017A**	0.99	0.94	58CV(A,X)090–16
CAP**3617A**	0.99	0.95	58CV(A,X)090–16
CNPH*3117A**	1.01	0.92	58CV(A,X)090–16
CNPV*3017A**	0.98	0.94	58CV(A,X)090–16
CNPV*3117A**	1.01	0.92	58CV(A,X)090–16
CNPV*3617A**	0.98	0.94	58CV(A,X)090–16
CNPV*3717A**	1.01	0.93	58CV(A,X)090–16
CAP**3621A**	0.99	0.95	58CV(A,X)110–20
CNPH*3117A**	1.01	0.92	58CV(A,X)110–20
CNPV*3621A**	0.99	0.94	58CV(A,X)110–20
CNPH*3117A**	1.01	0.92	58CV(A,X)135–22
CNPH*3117A**	1.01	0.92	58CV(A,X)155–22
CAP**3619A**	1.00	1.00	58HDV040––12
CNPH*3017A**	0.99	0.94	58HDV040––12
CNPH*3117A**	1.01	0.96	58HDV040––12
CNPH*3617A**	0.99	0.94	58HDV040––12
CNPV*3017A**	0.99	0.94	58HDV040––12
CNPV*3117A**	1.00	0.94	58HDV040––12
CNPV*3617A**	0.99	0.94	58HDV040––12
CNPV*3621A**	0.99	0.95	58HDV040––12
CNPV*3717A**	1.00	0.92	58HDV040––12
CSPH*3012A**	1.00	1.00	58HDV040––12

COOLING INDOOR MODEL	CAPACITY	POWER	FURNACE MODEL
CSPH*3612A**	1.00	0.96	58HDV040––12
CAP**3619A**	1.00	1.00	58HDV060––12
CNPH*3017A**	0.99	0.95	58HDV060––12
CNPH*3117A**	1.01	0.96	58HDV060––12
CNPH*3617A**	0.99	0.95	58HDV060––12
CNPV*3017A**	0.99	0.95	58HDV060––12
CNPV*3117A**	1.00	0.94	58HDV060––12
CNPV*3617A**	0.99	0.95	58HDV060––12
CNPV*3621A**	0.99	0.95	58HDV060––12
CNPV*3717A**	1.00	0.92	58HDV060––12
CSPH*3012A**	1.00	1.00	58HDV060––12
CSPH*3612A**	1.00	0.96	58HDV060––12
CAP**4823A**	1.01	0.93	58HDV080––20
CNPH*3017A**	1.00	0.94	58HDV080––20
CNPH*3117A**	1.01	0.92	58HDV080––20
CNPH*3617A**	1.00	0.94	58HDV080––20
CNPV*3621A**	1.00	0.94	58HDV080––20
CSPH*3012A**	1.00	0.96	58HDV080––20
CSPH*3612A**	1.00	0.92	58HDV080––20
CNPH*3017A**	1.00	0.92	58HDV100––20
CNPH*3117A**	1.01	0.92	58HDV100––20
CNPH*3617A**	1.00	0.92	58HDV100––20
CSPH*3012A**	1.00	0.96	58HDV100––20
CSPH*3612A**	1.00	0.92	58HDV100––20
CNPH*3117A**	1.01	0.92	58ME(B,C)040–12
CNPV*3117A**	1.01	0.92	58ME(B,C)040–12
CNPV*3717A**	1.01	0.93	58ME(B,C)040–12
CAP**3017A**	1.00	0.92	58ME(B,C)060–12
CAP**3617A**	1.00	0.92	58ME(B,C)060–12
CNPH*3017A**	1.00	0.92	58ME(B,C)060–12
CNPH*3617A**	1.00	0.92	58ME(B,C)060–12
CNPV*3017A**	1.00	0.92	58ME(B,C)060–12
CNPV*3617A**	1.00	0.92	58ME(B,C)060–12
CSPH*3012A**	1.00	0.92	58ME(B,C)060–12
CSPH*3612A**	1.00	0.92	58ME(B,C)060–12
CAP**3017A**	1.00	0.92	58ME(B,C)080–12
CAP**3617A**	1.00	0.90	58ME(B,C)080–12
CNPH*3017A**	1.00	0.92	58ME(B,C)080–12

DETAILED COOLING CAPACITIES# CONTINUED

24ACB330A30 Outdoor Section With 30 Indoor Section

COOLING INDOOR MODEL	CAPACITY	POWER	FURNACE MODEL
CNPH*3617A**	1.00	0.92	58ME(B,C)080–12
CNPV*3017A**	1.00	0.92	58ME(B,C)080–12
CNPV*3617A**	1.00	0.92	58ME(B,C)080–12
CSPH*3012A**	1.00	0.92	58ME(B,C)080–12
CSPH*3612A**	1.00	0.90	58ME(B,C)080–12
CAP**3017A**	1.00	0.92	58ME(B,C)080–16
CAP**3617A**	1.00	0.92	58ME(B,C)080–16
CNPH*3017A**	1.00	0.92	58ME(B,C)080–16
CNPH*3617A**	1.00	0.92	58ME(B,C)080–16
CNPV*3017A**	1.00	0.92	58ME(B,C)080–16
CNPV*3617A**	1.00	0.92	58ME(B,C)080–16
CSPH*3012A**	1.00	0.92	58ME(B,C)080–16
CSPH*3612A**	1.00	0.92	58ME(B,C)080–16
CAP**3017A**	1.00	0.92	58MEB040–12
CAP**3617A**	1.00	0.90	58MEB040–12
CNPH*3017A**	1.00	0.92	58MEB040–12
CNPH*3617A**	1.00	0.92	58MEB040–12
CNPV*3017A**	1.00	0.92	58MEB040–12
CNPV*3617A**	1.00	0.92	58MEB040–12
CSPH*3012A**	1.00	0.92	58MEB040–12
CSPH*3612A**	1.00	0.90	58MEB040–12
CNPH*3117A**	1.01	0.92	58MEC060–12
CNPV*3117A**	1.01	0.92	58MEC060–12
CNPV*3717A**	1.01	0.93	58MEC060–12
CNPH*3117A**	1.01	0.92	58MEC080–12
CNPV*3117A**	1.01	0.92	58MEC080–12
CNPV*3717A**	1.01	0.93	58MEC080–12
CNPH*3117A**	1.01	0.92	58MEC080–16
CNPV*3117A**	1.01	0.92	58MEC080–16
CNPV*3717A**	1.01	0.93	58MEC080–16
CNPH*3017A**	0.98	0.96	58MV(B,C)040–14
CNPH*3617A**	0.98	0.96	58MV(B,C)040–14
CSPH*3012A**	0.96	0.94	58MV(B,C)040–14
CSPH*3612A**	0.97	0.93	58MV(B,C)040–14
CAP**3017A**	0.99	0.94	58MV(B,C)060–14
CAP**3617A**	0.99	0.94	58MV(B,C)060–14
CNPH*3117A**	1.01	0.92	58MV(B,C)060–14
CNPV*3017A**	0.98	0.94	58MV(B,C)060–14
CNPV*3117A**	1.01	0.92	58MV(B,C)060–14
CNPV*3617A**	0.98	0.94	58MV(B,C)060–14
CNPV*3717A**	1.01	0.93	58MV(B,C)060–14
CAP**3014A**	0.98	0.96	58MV(B,C)080–14
CAP**3621A**	0.99	0.95	58MV(B,C)080–14
CNPH*3017A**	0.99	0.94	58MV(B,C)080–14
CNPH*3117A**	1.01	0.92	58MV(B,C)080–14
CNPV*3621A**	0.98	0.94	58MV(B,C)080–14
CNPH*3117A**	1.01	0.92	58MV(B,C)080–20
CNPV*3621A**	0.99	0.93	58MV(B,C)080–20
CNPH*3117A**	1.01	0.92	58MV(B,C)100–20
CNPH*3117A**	1.01	0.92	58MV(B,C)120–20
CNPH*3117A**	1.01	0.92	58MVB040–14
CAP**3017A**	0.99	0.93	58PH*070–16
CAP**3617A**	1.00	0.94	58PH*070–16
CNPH*3017A**	0.99	0.93	58PH*070–16

COOLING INDOOR MODEL	CAPACITY	POWER	FURNACE MODEL
CNPH*3117A**	1.01	0.92	58PH*070–16
CNPH*3617A**	0.99	0.93	58PH*070–16
CNPV*3017A**	0.99	0.93	58PH*070–16
CNPV*3117A**	1.01	0.92	58PH*070–16
CNPV*3617A**	0.99	0.93	58PH*070–16
CNPV*3717A**	1.01	0.93	58PH*070–16
CSPH*3012A**	0.99	0.93	58PH*070–16
CSPH*3612A**	1.00	0.92	58PH*070–16
CAP**3621A**	1.01	0.92	58PH*090–16
CNPH*3017A**	0.99	0.91	58PH*090–16
CNPH*3117A**	1.01	0.92	58PH*090–16
CNPH*3617A**	0.99	0.91	58PH*090–16
CNPV*3621A**	0.99	0.91	58PH*090–16
CSPH*3012A**	0.99	0.93	58PH*090–16
CSPH*3612A**	1.01	0.92	58PH*090–16
CAP**3017A**	0.99	0.94	58UVB060–14
CAP**3017A**	0.99	0.94	58UVB060–14
CAP**3617A**	0.99	0.94	58UVB060–14
CAP**3617A**	0.99	0.94	58UVB060–14
CNPV*3017A**	0.98	0.94	58UVB060–14
CNPV*3017A**	0.98	0.94	58UVB060–14
CNPV*3117A**	1.01	0.92	58UVB060–14
CNPV*3117A**	1.01	0.92	58UVB060–14
CNPV*3617A**	0.98	0.94	58UVB060–14
CNPV*3617A**	0.98	0.94	58UVB060–14
CNPV*3717A**	1.01	0.93	58UVB060–14
CNPV*3717A**	1.01	0.93	58UVB060–14
CAP**3014A**	0.98	0.96	58UVB080–14
CAP**3621A**	0.99	0.95	58UVB080–14
CNPV*3621A**	0.98	0.94	58UVB080–14
CNPV*3621A**	0.98	0.94	58UVB080–14
CNPV*3621A**	0.99	0.93	58UVB080–20
CNPV*3621A**	0.99	0.93	58UVB080–20
CAP**3017A**	0.99	0.93	58VLR105–12
CAP**3617A**	0.99	0.93	58VLR105–12
CNPH*3017A**	0.99	0.93	58VLR105–12
CNPH*3117A**	1.00	0.90	58VLR105–12
CNPH*3617A**	0.99	0.93	58VLR105–12
CNPV*3017A**	0.99	0.93	58VLR105–12
CNPV*3117A**	1.00	0.90	58VLR105–12
CNPV*3617A**	0.99	0.93	58VLR105–12
CNPV*3717A**	1.00	0.90	58VLR105–12
CSPH*3012A**	1.00	0.94	58VLR105–12
CSPH*3612A**	1.00	0.90	58VLR105–12
CAP**3017A**	0.98	0.92	58VMR105–12
CAP**3617A**	0.99	0.93	58VMR105–12
CNPH*3017A**	0.98	0.92	58VMR105–12
CNPH*3117A**	1.00	0.90	58VMR105–12
CNPH*3617A**	0.98	0.92	58VMR105–12
CNPV*3017A**	0.98	0.92	58VMR105–12
CNPV*3117A**	1.00	0.90	58VMR105–12
CNPV*3617A**	0.98	0.92	58VMR105–12
CNPV*3717A**	1.00	0.90	58VMR105–12
CSPH*3012A**	0.99	0.93	58VMR105–12

COOLING INDOOR MODEL	CAPACITY	POWER	FURNACE MODEL
CSPH*3612A**	1.00	0.92	58VMR105–12
CAP**3017A**	0.99	0.94	59*N*A060V17**14
CAP**3617A**	0.99	0.94	59*N*A060V17**14
CAP**3619A**	0.99	0.94	59*N*A060V17**14
CAP**3621A**	0.99	0.93	59*N*A060V17**14
CNPH*3017A**	0.99	0.94	59*N*A060V17**14
CNPH*3117A**	1.01	0.92	59*N*A060V17**14
CNPH*3617A**	0.99	0.94	59*N*A060V17**14
CNPV*3017A**	0.99	0.94	59*N*A060V17**14
CNPV*3117A**	1.01	0.92	59*N*A060V17**14
CNPV*3617A**	0.99	0.94	59*N*A060V17**14
CNPV*3621A**	0.99	0.94	59*N*A060V17**14
CNPV*3717A**	1.02	0.94	59*N*A060V17**14
CSPH*3012A**	0.99	0.95	59*N*A060V17**14
CSPH*3612A**	1.01	0.94	59*N*A060V17**14
CAP**3017A**	0.99	0.93	59*N*A080V17**14
CAP**3617A**	0.99	0.93	59*N*A080V17**14
CAP**3619A**	0.99	0.93	59*N*A080V17**14
CAP**3621A**	0.99	0.93	59*N*A080V17**14
CNPH*3017A**	0.99	0.93	59*N*A080V17**14
CNPH*3117A**	1.01	0.93	59*N*A080V17**14
CNPH*3617A**	0.99	0.93	59*N*A080V17**14
CNPV*3017A**	0.99	0.93	59*N*A080V17**14
CNPV*3117A**	1.01	0.93	59*N*A080V17**14
CNPV*3617A**	0.99	0.93	59*N*A080V17**14
CNPV*3621A**	0.99	0.93	59*N*A080V17**14
CNPV*3717A**	1.02	0.94	59*N*A080V17**14
CSPH*3012A**	0.99	0.93	59*N*A080V17**14
CSPH*3612A**	1.01	0.93	59*N*A080V17**14
CAP**3619A**	1.00	0.93	59*N*A100V21**20
CAP**3621A**	1.00	0.92	59*N*A100V21**20
CNPH*3017A**	0.99	0.93	59*N*A100V21**20
CNPH*3117A**	1.02	0.94	59*N*A100V21**20
CNPH*3617A**	0.99	0.93	59*N*A100V21**20
CNPV*3621A**	0.99	0.93	59*N*A100V21**20
CSPH*3012A**	1.00	0.93	59*N*A100V21**20
CSPH*3612A**	1.01	0.93	59*N*A100V21**20
CNPH*3017A**	0.99	0.93	59*N*A120V24**22
CNPH*3117A**	1.01	0.93	59*N*A120V24**22
CNPH*3617A**	0.99	0.93	59*N*A120V24**22
CSPH*3012A**	1.00	0.93	59*N*A120V24**22
CSPH*3612A**	1.01	0.93	59*N*A120V24**22
CAP**3017A**	0.99	0.95	59*P5A060E17**14
CAP**3617A**	1.00	0.93	59*P5A060E17**14
CAP**3619A**	1.00	0.93	59*P5A060E17**14
CAP**3621A**	1.00	0.93	59*P5A060E17**14
CNPH*3017A**	0.99	0.95	59*P5A060E17**14
CNPH*3117A**	1.02	0.94	59*P5A060E17**14
CNPH*3617A**	0.99	0.95	59*P5A060E17**14
CNPV*3017A**	0.99	0.95	59*P5A060E17**14
CNPV*3117A**	1.02	0.94	59*P5A060E17**14
CNPV*3617A**	0.99	0.95	59*P5A060E17**14
CNPV*3621A**	0.99	0.95	59*P5A060E17**14
CNPV*3717A**	1.03	0.94	59*P5A060E17**14

DETAILED COOLING CAPACITIES# CONTINUED

24ACB330A30 Outdoor Section With 30 Indoor Section

COOLING INDOOR MODEL	CAPACITY	POWER	FURNACE MODEL
CSPH*3012A**	0.99	0.95	59*P5A060E17**14
CSPH*3612A**	1.01	0.93	59*P5A060E17**14
CAP**3017A**	1.00	0.93	59*P5A080E17**16
CAP**3617A**	1.01	0.94	59*P5A080E17**16
CAP**3619A**	1.01	0.94	59*P5A080E17**16
CAP**3621A**	1.01	0.94	59*P5A080E17**16
CNPH*3017A**	1.00	0.93	59*P5A080E17**16
CNPH*3117A**	1.03	0.94	59*P5A080E17**16
CNPH*3617A**	1.00	0.93	59*P5A080E17**16
CNPV*3017A**	1.00	0.93	59*P5A080E17**16
CNPV*3117A**	1.03	0.94	59*P5A080E17**16
CNPV*3617A**	1.00	0.93	59*P5A080E17**16
CNPV*3621A**	1.00	0.93	59*P5A080E17**16
CNPV*3717A**	1.04	0.95	59*P5A080E17**16
CSPH*3012A**	1.01	0.94	59*P5A080E17**16
CSPH*3612A**	1.03	0.94	59*P5A080E17**16
CAP**3017A**	0.99	0.94	OVLAAB036098
CAP**3617A**	0.99	0.93	OVLAAB036098
CNPH*3017A**	0.99	0.94	OVLAAB036098
CNPH*3117A**	1.00	0.92	OVLAAB036098
CNPH*3617A**	0.99	0.94	OVLAAB036098
CNPV*3017A**	0.99	0.94	OVLAAB036098
CNPV*3117A**	1.00	0.92	OVLAAB036098
CNPV*3617A**	0.99	0.93	OVLAAB036098
CNPV*3717A**	1.00	0.90	OVLAAB036098
CSPH*3012A**	0.99	0.95	OVLAAB036098
CSPH*3612A**	1.00	0.92	OVLAAB036098
CAP**3621A**	1.00	0.92	OVLAAB048112
CNPH*3017A**	1.00	0.94	OVLAAB048112
CNPH*3117A**	1.00	0.90	OVLAAB048112
CNPH*3617A**	1.00	0.94	OVLAAB048112
CNPV*3621A**	1.00	0.94	OVLAAB048112
CSPH*3012A**	1.00	0.94	OVLAAB048112
CSPH*3612A**	1.00	0.92	OVLAAB048112
CAP**3017A**	0.99	0.95	OVMAAB036098
CAP**3617A**	0.99	0.95	OVMAAB036098
CNPH*3017A**	0.99	0.95	OVMAAB036098
CNPH*3117A**	1.00	0.92	OVMAAB036098
CNPH*3617A**	0.99	0.95	OVMAAB036098
CNPV*3017A**	0.99	0.93	OVMAAB036098
CNPV*3117A**	1.00	0.92	OVMAAB036098
CNPV*3617A**	0.99	0.93	OVMAAB036098
CNPV*3717A**	1.00	0.92	OVMAAB036098
CSPH*3012A**	0.99	0.95	OVMAAB036098
CSPH*3612A**	1.00	0.94	OVMAAB036098
CAP**3017A**	0.99	0.91	OVMAAB042112
CAP**3617A**	1.00	0.92	OVMAAB042112
CNPH*3017A**	0.99	0.93	OVMAAB042112
CNPH*3117A**	1.00	0.90	OVMAAB042112
CNPH*3617A**	0.99	0.93	OVMAAB042112
CNPV*3017A**	0.99	0.93	OVMAAB042112
CNPV*3117A**	1.00	0.90	OVMAAB042112
CNPV*3617A**	0.99	0.93	OVMAAB042112
CNPV*3717A**	1.00	0.90	OVMAAB042112

COOLING INDOOR MODEL	CAPACITY	POWER	FURNACE MODEL
CSPH*3012A**	1.00	0.94	OVMAAB042112
CSPH*3612A**	1.00	0.90	OVMAAB042112

See notes on pg. 62

DETAILED COOLING CAPACITIES# CONTINUED

EVAPORATOR AIR		CONDENSER ENTERING AIR TEMPERATURES °F (°C)																	
		75 (23.9)			85 (29.4)			95 (35)			105 (40.6)			115 (46.1)			125 (51.7)		
CFM	EWB °F (°C)	Capacity MBtuh		Total Sys. KW**	Capacity MBtuh		Total Sys. KW**	Capacity MBtuh		Total Sys. KW**	Capacity MBtuh		Total Sys. KW**	Capacity MBtuh		Total Sys. KW**	Capacity MBtuh		Total Sys. KW**
		Total	Sens‡		Total	Sens‡		Total	Sens‡		Total	Sens‡		Total	Sens‡		Total	Sens‡	
24ACB336A30 Outdoor Section With 36 Indoor Section																			
1050	72 (22.2)	40.12	21.34	2.48	38.42	20.70	2.74	36.61	20.02	3.03	34.70	19.31	3.35	32.62	18.55	3.71	30.32	17.72	4.09
	67 (19.4)	36.62	26.34	2.47	35.03	25.67	2.73	33.34	24.97	3.02	31.55	24.24	3.34	29.62	23.47	3.70	27.50	22.62	4.09
	62 (16.7)	33.54	31.31	2.46	32.11	30.61	2.72	30.61	29.86	3.01	29.06	29.06	3.34	27.62	27.62	3.70	25.99	25.99	4.09
	57 (13.9)	32.88	32.88	2.46	31.70	31.70	2.72	30.44	30.44	3.01	29.09	29.09	3.34	27.63	27.63	3.70	26.00	26.00	4.09
1200	72 (22.2)	40.72	22.34	2.54	38.96	21.69	2.80	37.09	21.00	3.09	35.11	20.28	3.41	32.97	19.51	3.76	30.60	18.67	4.15
	67 (19.4)	37.19	27.96	2.53	35.54	27.28	2.79	33.80	26.58	3.08	31.96	25.85	3.40	29.98	25.06	3.76	27.81	24.20	4.15
	62 (16.7)	34.30	33.50	2.52	32.84	32.84	2.78	31.55	31.55	3.07	30.12	30.12	3.40	28.56	28.56	3.75	26.83	26.83	4.14
	57 (13.9)	34.15	34.15	2.52	32.89	32.89	2.78	31.55	31.55	3.07	30.12	30.12	3.40	28.56	28.56	3.75	26.83	26.83	4.14
1350	72 (22.2)	41.16	23.27	2.60	39.34	22.61	2.86	37.42	21.92	3.14	35.40	21.20	3.47	33.21	20.42	3.82	30.78	19.57	4.21
	67 (19.4)	37.62	29.51	2.59	35.93	28.83	2.85	34.15	28.12	3.14	32.27	27.38	3.46	30.25	26.57	3.81	28.05	25.67	4.20
	62 (16.7)	35.18	35.18	2.58	33.86	33.86	2.84	32.45	32.45	3.13	30.95	30.95	3.46	29.31	29.31	3.81	27.50	27.50	4.20
	57 (13.9)	35.19	35.19	2.58	33.86	33.86	2.84	32.46	32.46	3.13	30.95	30.95	3.46	29.31	29.31	3.81	27.50	27.50	4.20

COOLING INDOOR MODEL	CAPACITY	POWER	FURNACE MODEL
*CAP**3617A**	1.00	1.00	
CAP**3614A**	0.97	0.97	
CAP**3619A**	1.00	1.00	
CAP**3621A**	1.00	1.00	
CAP**4221A**	1.00	1.00	
CAP**4224A**	1.00	1.00	
CAP**4823A**	1.00	1.00	
CAP**6025A**	1.00	1.00	
CNPF*3618A**	0.99	0.99	
CNPH*3617A**	0.99	0.99	
CNPH*4221A**	1.00	1.00	
CNPH*4321A**	1.03	1.03	
CNPV*3617A**	0.99	0.99	
CNPV*3621A**	0.99	0.99	
CNPV*3717A**	1.03	1.03	
CNPV*4217A**	1.00	1.00	
CNPV*4221A**	1.00	1.00	
CNPV*4324A**	1.03	1.03	
CSPH*3612A**	0.99	0.99	
CSPH*4212A**	0.99	0.98	
FB4CNF036	0.99	0.99	
FB4CNF036	0.99	0.99	
FB4CNF042	1.00	1.00	
FB4CNF042	1.00	1.00	
FE4AN(B,F)003	1.00	0.94	
FE4AN(B,F)005	1.03	0.94	
FE4ANB006	1.04	0.95	
FE4ANF002	0.99	0.95	
FF1ENP036	0.99	0.99	
FF1ENP037	1.00	0.92	
FV4BN(B,F)003	1.00	0.92	
FV4BN(B,F)005	1.03	0.91	
FV4BNB006	1.04	0.90	
FV4BNF002	0.99	0.93	
FV4CN(B,F)003	1.00	0.94	
FV4CN(B,F)005	1.03	0.94	
FV4CNB006	1.04	0.95	
FV4CNF002	0.99	0.95	

COOLING INDOOR MODEL	CAPACITY	POWER	FURNACE MODEL
FX4CN(B,F)036	1.01	0.95	
FX4CN(B,F)042	1.03	0.94	
FX4DN(B,F)037	1.02	0.93	
FX4DN(B,F)043	1.02	0.93	
FX4DN(B,F)049	1.03	0.94	
FY4ANF042	1.01	1.01	
FY5BNF036	1.00	1.00	
FY5BNF036	1.00	1.00	
FY5BNF042	1.00	1.00	
FY5BNF042	1.00	1.00	
CAP**3614A**	0.97	0.95	58CV(A,X)070–12
CNPH*3617A**	0.98	0.96	58CV(A,X)070–12
CNPH*4221A**	1.01	0.96	58CV(A,X)070–12
CNPH*4321A**	1.03	0.94	58CV(A,X)070–12
CSPH*3612A**	0.98	0.93	58CV(A,X)070–12
CSPH*4212A**	1.00	0.98	58CV(A,X)070–12
CAP**3617A**	0.99	0.95	58CV(A,X)090–16
CNPH*4321A**	1.03	0.94	58CV(A,X)090–16
CNPV*3617A**	0.98	0.94	58CV(A,X)090–16
CNPV*3717A**	1.03	0.94	58CV(A,X)090–16
CNPV*4217A**	1.00	0.90	58CV(A,X)090–16
CNPV*4221A**	1.00	0.92	58CV(A,X)090–16
CAP**3621A**	0.99	0.95	58CV(A,X)110–20
CAP**4221A**	1.00	0.96	58CV(A,X)110–20
CNPH*4321A**	1.03	0.94	58CV(A,X)110–20
CNPV*3621A**	0.99	0.98	58CV(A,X)110–20
CNPV*4221A**	1.02	0.96	58CV(A,X)110–20
CAP**4224A**	1.00	0.94	58CV(A,X)135–22
CNPH*4321A**	1.03	0.94	58CV(A,X)135–22
CNPV*4324A**	1.03	0.94	58CV(A,X)135–22
CNPH*4321A**	1.03	0.94	58CV(A,X)155–22
CNPV*4324A**	1.03	0.94	58CV(A,X)155–22
CAP**3619A**	0.99	0.99	58HDV040––12
CNPH*3617A**	0.99	0.99	58HDV040––12
CNPH*4221A**	1.00	1.00	58HDV040––12
CNPH*4321A**	1.03	1.03	58HDV040––12
CNPV*3617A**	0.99	0.99	58HDV040––12
CNPV*3621A**	0.99	0.99	58HDV040––12

COOLING INDOOR MODEL	CAPACITY	POWER	FURNACE MODEL
CNPV*3717A**	1.01	0.96	58HDV040––12
CNPV*4217A**	1.01	0.96	58HDV040––12
CNPV*4221A**	1.00	0.96	58HDV040––12
CSPH*3612A**	1.01	1.01	58HDV040––12
CSPH*4212A**	1.01	1.01	58HDV040––12
CAP**3619A**	0.99	0.99	58HDV060––12
CNPH*3617A**	0.99	0.99	58HDV060––12
CNPH*4221A**	1.00	0.96	58HDV060––12
CNPH*4321A**	1.03	0.98	58HDV060––12
CNPV*3617A**	0.99	0.99	58HDV060––12
CNPV*3621A**	0.99	0.95	58HDV060––12
CNPV*3717A**	1.01	0.92	58HDV060––12
CNPV*4217A**	1.01	0.96	58HDV060––12
CNPV*4221A**	1.00	0.96	58HDV060––12
CSPH*3612A**	1.01	1.01	58HDV060––12
CSPH*4212A**	1.01	0.97	58HDV060––12
CAP**4823A**	1.01	0.97	58HDV080––20
CNPH*3617A**	1.00	0.96	58HDV080––20
CNPH*4221A**	1.00	0.94	58HDV080––20
CNPH*4321A**	1.03	0.94	58HDV080––20
CNPV*3621A**	1.00	0.96	58HDV080––20
CNPV*4221A**	1.00	0.94	58HDV080––20
CNPV*4324A**	1.00	0.90	58HDV080––20
CSPH*3612A**	1.01	0.97	58HDV080––20
CSPH*4212A**	1.01	0.97	58HDV080––20
CNPH*3617A**	1.00	0.94	58HDV100––20
CNPH*4221A**	1.00	0.92	58HDV100––20
CNPH*4321A**	1.03	0.94	58HDV100––20
CNPV*4324A**	1.00	0.90	58HDV100––20
CNPV*4324A**	1.00	0.90	58HDV100––20
CSPH*3612A**	1.01	0.97	58HDV100––20
CSPH*4212A**	1.01	0.93	58HDV100––20
CNPH*4321A**	1.03	0.94	58ME(B,C)040–12
CNPV*3717A**	1.03	0.94	58ME(B,C)040–12
CAP**3617A**	1.00	0.92	58ME(B,C)060–12
CNPH*3617A**	1.00	0.92	58ME(B,C)060–12
CNPH*4221A**	1.00	0.92	58ME(B,C)060–12
CNPV*3617A**	1.00	0.92	58ME(B,C)060–12

DETAILED COOLING CAPACITIES# CONTINUED

24ACB336A30 Outdoor Section With 36 Indoor Section

COOLING INDOOR MODEL	CAPACITY	POWER	FURNACE MODEL
CNPV*4217A**	1.00	0.90	58ME(B,C)060–12
CSPH*3612A**	1.00	0.92	58ME(B,C)060–12
CSPH*4212A**	1.00	0.90	58ME(B,C)060–12
CAP**3617A**	1.00	0.92	58ME(B,C)080–12
CNPH*3617A**	0.99	0.91	58ME(B,C)080–12
CNPH*4221A**	1.00	0.92	58ME(B,C)080–12
CNPV*3617A**	0.99	0.91	58ME(B,C)080–12
CNPV*4217A**	1.00	0.90	58ME(B,C)080–12
CSPH*3612A**	1.00	0.92	58ME(B,C)080–12
CSPH*4212A**	1.00	0.90	58ME(B,C)080–12
CAP**3617A**	1.00	0.92	58ME(B,C)080–16
CNPH*3617A**	1.00	0.92	58ME(B,C)080–16
CNPH*4221A**	1.00	0.92	58ME(B,C)080–16
CNPV*3617A**	1.00	0.92	58ME(B,C)080–16
CNPV*4217A**	1.00	0.90	58ME(B,C)080–16
CSPH*3612A**	1.00	0.92	58ME(B,C)080–16
CSPH*4212A**	1.00	0.90	58ME(B,C)080–16
CAP**3621A**	1.00	0.90	58ME(B,C)100–20
CAP**4221A**	1.00	0.90	58ME(B,C)100–20
CNPH*3617A**	0.99	0.91	58ME(B,C)100–20
CNPH*4221A**	1.00	0.90	58ME(B,C)100–20
CNPV*3621A**	0.99	0.90	58ME(B,C)100–20
CNPV*4221A**	1.00	0.90	58ME(B,C)100–20
CSPH*3612A**	1.00	0.90	58ME(B,C)100–20
CSPH*4212A**	1.00	0.90	58ME(B,C)100–20
CAP**3617A**	1.00	0.92	58MEB040–12
CNPH*3617A**	1.00	0.92	58MEB040–12
CNPH*4221A**	1.00	0.92	58MEB040–12
CNPV*3617A**	1.00	0.92	58MEB040–12
CNPV*4217A**	1.00	0.90	58MEB040–12
CSPH*3612A**	1.00	0.92	58MEB040–12
CSPH*4212A**	1.00	0.90	58MEB040–12
CNPH*4321A**	1.03	0.94	58MEC060–12
CNPV*3717A**	1.03	0.94	58MEC060–12
CNPH*4321A**	1.03	0.94	58MEC080–12
CNPV*3717A**	1.03	0.94	58MEC080–12
CNPH*4321A**	1.03	0.94	58MEC080–16
CNPV*3717A**	1.03	0.94	58MEC080–16
CNPH*4321A**	1.03	0.94	58MEC100–20
CAP**4224A**	0.99	0.95	58MV(B,C)040–14
CNPH*3617A**	0.98	0.96	58MV(B,C)040–14
CNPH*4221A**	1.01	0.96	58MV(B,C)040–14
CSPH*3612A**	0.98	0.93	58MV(B,C)040–14
CSPH*4212A**	0.99	0.98	58MV(B,C)040–14
CAP**3617A**	0.99	0.95	58MV(B,C)060–14
CNPH*4221A**	1.01	0.97	58MV(B,C)060–14
CNPH*4321A**	1.03	0.94	58MV(B,C)060–14
CNPV*3617A**	0.98	0.96	58MV(B,C)060–14
CNPV*3717A**	1.03	0.94	58MV(B,C)060–14
CNPV*4217A**	1.00	0.92	58MV(B,C)060–14
CAP**3621A**	0.99	0.97	58MV(B,C)080–14
CAP**4221A**	0.99	0.95	58MV(B,C)080–14
CNPH*4321A**	1.03	0.94	58MV(B,C)080–14
CNPV*3621A**	0.99	0.99	58MV(B,C)080–14

COOLING INDOOR MODEL	CAPACITY	POWER	FURNACE MODEL
CNPV*4221A**	1.01	0.96	58MV(B,C)080–14
CNPH*4321A**	1.03	0.94	58MV(B,C)080–20
CNPH*4321A**	1.03	0.94	58MV(B,C)100–20
CNPV*4221A**	1.01	0.95	58MV(B,C)100–20
CNPH*4321A**	1.03	0.94	58MV(B,C)120–20
CNPV*4324A**	1.03	0.94	58MV(B,C)120–20
CNPH*4321A**	1.03	0.94	58MVB040–14
CNPV*4324A**	1.03	0.94	58MVB040–14
CAP**3614A**	0.99	0.99	58PH*045–08
CNPH*3617A**	0.99	0.99	58PH*045–08
CNPH*4221A**	1.00	0.96	58PH*045–08
CNPH*4321A**	1.03	1.03	58PH*045–08
CSPH*3612A**	1.00	0.94	58PH*045–08
CSPH*4212A**	1.01	0.95	58PH*045–08
CAP**3617A**	0.99	0.93	58PH*070–16
CNPH*3617A**	0.99	0.93	58PH*070–16
CNPH*4221A**	1.01	0.95	58PH*070–16
CNPH*4321A**	1.03	0.98	58PH*070–16
CNPV*3617A**	0.99	0.93	58PH*070–16
CNPV*3717A**	1.03	0.98	58PH*070–16
CNPV*4217A**	1.00	0.92	58PH*070–16
CSPH*3612A**	1.00	0.92	58PH*070–16
CSPH*4212A**	1.01	0.93	58PH*070–16
CAP**3621A**	1.00	0.92	58PH*090–16
CAP**4221A**	1.01	0.91	58PH*090–16
CNPH*3617A**	1.00	0.92	58PH*090–16
CNPH*4221A**	1.01	0.91	58PH*090–16
CNPH*4321A**	1.03	0.94	58PH*090–16
CNPV*3621A**	1.00	0.92	58PH*090–16
CNPV*4221A**	1.01	0.91	58PH*090–16
CSPH*3612A**	1.00	0.92	58PH*090–16
CSPH*4212A**	1.01	0.91	58PH*090–16
CAP**3621A**	1.00	0.92	58PH*110–20
CAP**4221A**	1.01	0.91	58PH*110–20
CNPH*3617A**	1.00	0.92	58PH*110–20
CNPH*4221A**	1.01	0.91	58PH*110–20
CNPH*4321A**	1.03	0.94	58PH*110–20
CNPV*3621A**	1.00	0.92	58PH*110–20
CNPV*4221A**	1.01	0.91	58PH*110–20
CSPH*3612A**	1.00	0.92	58PH*110–20
CSPH*4212A**	1.01	0.91	58PH*110–20
CAP**4224A**	0.99	0.93	58UVB040–14
CAP**3617A**	0.99	0.95	58UVB060–14
CAP**3617A**	0.99	0.95	58UVB060–14
CNPV*3617A**	0.98	0.96	58UVB060–14
CNPV*3617A**	0.98	0.96	58UVB060–14
CNPV*3717A**	1.03	0.94	58UVB060–14
CNPV*3717A**	1.03	0.94	58UVB060–14
CNPV*4217A**	1.00	0.92	58UVB060–14
CNPV*4217A**	1.00	0.92	58UVB060–14
CAP**3621A**	0.99	0.97	58UVB080–14
CAP**3621A**	0.99	0.97	58UVB080–14
CAP**4221A**	0.99	0.95	58UVB080–14
CAP**4221A**	0.99	0.95	58UVB080–14

COOLING INDOOR MODEL	CAPACITY	POWER	FURNACE MODEL
CNPV*3621A**	0.99	0.99	58UVB080–14
CNPV*3621A**	0.99	0.99	58UVB080–14
CNPV*4221A**	1.01	0.96	58UVB080–14
CNPV*4221A**	1.01	0.96	58UVB080–14
CNPV*4221A**	1.01	0.95	58UVB100–20
CNPV*4221A**	1.01	0.95	58UVB100–20
CNPV*4324A**	1.03	0.94	58UVB120–20
CNPV*4324A**	1.03	0.94	58UVB120–20
CAP**3617A**	1.00	0.94	58VLR105–12
CNPH*3617A**	0.99	0.95	58VLR105–12
CNPH*4221A**	1.00	0.92	58VLR105–12
CNPH*4321A**	1.01	0.91	58VLR105–12
CNPV*3617A**	0.99	0.95	58VLR105–12
CNPV*3717A**	1.01	0.91	58VLR105–12
CNPV*4217A**	1.00	0.92	58VLR105–12
CSPH*3612A**	1.00	0.92	58VLR105–12
CSPH*4212A**	1.01	0.91	58VLR105–12
CAP**3621A**	1.00	0.90	58VLR120–20
CAP**4221A**	1.00	0.90	58VLR120–20
CNPH*3617A**	0.99	0.91	58VLR120–20
CNPH*4221A**	1.00	0.90	58VLR120–20
CNPH*4321A**	1.01	0.91	58VLR120–20
CNPV*3621A**	0.99	0.91	58VLR120–20
CNPV*4221A**	1.00	0.90	58VLR120–20
CSPH*3612A**	1.00	0.90	58VLR120–20
CSPH*4212A**	1.01	0.91	58VLR120–20
CAP**3617A**	0.99	0.93	58VMR105–12
CNPH*3617A**	0.99	0.93	58VMR105–12
CNPH*4221A**	0.99	0.91	58VMR105–12
CNPH*4321A**	1.01	0.91	58VMR105–12
CNPV*3617A**	0.99	0.93	58VMR105–12
CNPV*3717A**	1.01	0.91	58VMR105–12
CNPV*4217A**	1.00	0.92	58VMR105–12
CSPH*3612A**	1.00	0.92	58VMR105–12
CSPH*4212A**	1.01	0.91	58VMR105–12
CAP**3621A**	0.99	0.91	58VMR120–20
CAP**4221A**	1.00	0.92	58VMR120–20
CNPH*3617A**	0.99	0.93	58VMR120–20
CNPH*4221A**	1.00	0.92	58VMR120–20
CNPH*4321A**	1.01	0.91	58VMR120–20
CNPV*3621A**	0.99	0.93	58VMR120–20
CNPV*4221A**	1.00	0.92	58VMR120–20
CSPH*3612A**	1.00	0.90	58VMR120–20
CSPH*4212A**	1.01	0.91	58VMR120–20
CAP**3617A**	0.98	0.94	59*N*A060V17**14
CAP**3619A**	0.98	0.94	59*N*A060V17**14
CAP**3621A**	0.98	0.92	59*N*A060V17**14
CAP**4221A**	0.99	0.92	59*N*A060V17**14
CNPH*3617A**	0.98	0.94	59*N*A060V17**14
CNPH*4221A**	0.99	0.92	59*N*A060V17**14
CNPH*4321A**	1.02	0.93	59*N*A060V17**14
CNPV*3617A**	0.98	0.94	59*N*A060V17**14
CNPV*3621A**	0.98	0.94	59*N*A060V17**14
CNPV*3717A**	1.02	0.93	59*N*A060V17**14

DETAILED COOLING CAPACITIES# CONTINUED

24ACB336A30 Outdoor Section With 36 Indoor Section

COOLING INDOOR MODEL	CAPACITY	POWER	FURNACE MODEL
CNPV*4217A**	1.00	0.93	59*N*A060V17**14
CNPV*4221A**	0.99	0.92	59*N*A060V17**14
CSPH*3612A**	1.01	0.94	59*N*A060V17**14
CSPH*4212A**	1.01	0.93	59*N*A060V17**14
CAP**3617A**	0.99	0.92	59*N*A080V17**14
CAP**3619A**	0.99	0.92	59*N*A080V17**14
CAP**3621A**	0.99	0.92	59*N*A080V17**14
CAP**4221A**	0.99	0.91	59*N*A080V17**14
CNPH*3617A**	0.98	0.94	59*N*A080V17**14
CNPH*4221A**	0.99	0.93	59*N*A080V17**14
CNPH*4321A**	1.02	0.94	59*N*A080V17**14
CNPV*3617A**	0.98	0.94	59*N*A080V17**14
CNPV*3621A**	0.98	0.92	59*N*A080V17**14
CNPV*3717A**	1.02	0.94	59*N*A080V17**14
CNPV*4217A**	1.01	0.92	59*N*A080V17**14
CNPV*4221A**	0.99	0.93	59*N*A080V17**14
CSPH*3612A**	1.01	0.92	59*N*A080V17**14
CSPH*4212A**	1.01	0.93	59*N*A080V17**14
CAP**3619A**	0.99	0.93	59*N*A100V21**20
CAP**3621A**	0.99	0.91	59*N*A100V21**20
CAP**4221A**	1.00	0.92	59*N*A100V21**20
CAP**4224A**	1.00	0.92	59*N*A100V21**20
CNPH*3617A**	0.99	0.92	59*N*A100V21**20
CNPH*4221A**	1.00	0.92	59*N*A100V21**20
CNPH*4321A**	1.03	0.91	59*N*A100V21**20
CNPV*3621A**	0.99	0.92	59*N*A100V21**20
CNPV*4221A**	1.00	0.92	59*N*A100V21**20
CNPV*4324A**	1.03	0.91	59*N*A100V21**20
CSPH*3612A**	1.01	0.93	59*N*A100V21**20
CSPH*4212A**	1.02	0.93	59*N*A100V21**20
CAP**4224A**	1.00	0.92	59*N*A120V24**22
CNPH*3617A**	0.99	0.92	59*N*A120V24**22
CNPH*4221A**	1.00	0.92	59*N*A120V24**22
CNPH*4321A**	1.03	0.91	59*N*A120V24**22
CNPV*4324A**	1.03	0.91	59*N*A120V24**22
CSPH*3612A**	1.01	0.93	59*N*A120V24**22
CSPH*4212A**	1.02	0.90	59*N*A120V24**22
CAP**3617A**	0.99	0.95	59*P5A060E17**14
CAP**3619A**	0.99	0.95	59*P5A060E17**14
CAP**3621A**	1.00	0.96	59*P5A060E17**14
CAP**4221A**	1.01	0.94	59*P5A060E17**14
CNPH*3617A**	0.99	0.95	59*P5A060E17**14
CNPH*4221A**	1.01	0.94	59*P5A060E17**14
CNPH*4321A**	1.04	0.95	59*P5A060E17**14
CNPV*3617A**	0.99	0.95	59*P5A060E17**14
CNPV*3621A**	0.99	0.95	59*P5A060E17**14
CNPV*3717A**	1.03	0.94	59*P5A060E17**14
CNPV*4217A**	1.01	0.94	59*P5A060E17**14
CNPV*4221A**	1.01	0.94	59*P5A060E17**14
CSPH*3612A**	1.02	0.95	59*P5A060E17**14
CSPH*4212A**	1.02	0.94	59*P5A060E17**14
CAP**3617A**	0.99	0.93	59*P5A080E17**16
CAP**3619A**	0.99	0.93	59*P5A080E17**16
CAP**3621A**	1.00	0.93	59*P5A080E17**16

COOLING INDOOR MODEL	CAPACITY	POWER	FURNACE MODEL
CAP**4221A**	1.01	0.94	59*P5A080E17**16
CNPH*3617A**	0.99	0.95	59*P5A080E17**16
CNPH*4221A**	1.01	0.94	59*P5A080E17**16
CNPH*4321A**	1.04	0.95	59*P5A080E17**16
CNPV*3617A**	0.99	0.95	59*P5A080E17**16
CNPV*3621A**	0.99	0.95	59*P5A080E17**16
CNPV*3717A**	1.03	0.94	59*P5A080E17**16
CNPV*4217A**	1.01	0.94	59*P5A080E17**16
CNPV*4221A**	1.01	0.94	59*P5A080E17**16
CSPH*3612A**	1.02	0.93	59*P5A080E17**16
CSPH*4212A**	1.02	0.94	59*P5A080E17**16
CAP**3617A**	0.99	0.95	OVLAAB036098
CNPH*3617A**	0.99	0.95	OVLAAB036098
CNPH*4221A**	1.00	0.96	OVLAAB036098
CNPH*4321A**	1.01	0.93	OVLAAB036098
CNPV*3617A**	0.99	0.95	OVLAAB036098
CNPV*3717A**	1.01	0.92	OVLAAB036098
CNPV*4217A**	1.00	0.94	OVLAAB036098
CSPH*3612A**	1.00	0.94	OVLAAB036098
CSPH*4212A**	1.01	0.95	OVLAAB036098
CAP**3621A**	1.00	0.94	OVLAAB048112
CAP**4221A**	1.00	0.94	OVLAAB048112
CNPH*3617A**	0.99	0.95	OVLAAB048112
CNPH*4221A**	1.00	0.94	OVLAAB048112
CNPH*4321A**	1.01	0.91	OVLAAB048112
CNPV*3621A**	0.99	0.95	OVLAAB048112
CNPV*4221A**	1.00	0.94	OVLAAB048112
CSPH*3612A**	1.00	0.92	OVLAAB048112
CSPH*4212A**	1.01	0.92	OVLAAB048112
CNPH*3617A**	1.02	0.96	OVLAAB060154
CNPH*4221A**	1.03	0.94	OVLAAB060154
CNPH*4321A**	1.01	0.91	OVLAAB060154
CSPH*3612A**	1.00	0.90	OVLAAB060154
CSPH*4212A**	1.01	0.91	OVLAAB060154
CAP**3617A**	0.99	0.95	OVMAAB036098
CNPH*3617A**	0.99	0.95	OVMAAB036098
CNPH*4221A**	1.00	0.96	OVMAAB036098
CNPH*4321A**	1.01	0.93	OVMAAB036098
CNPV*3617A**	0.99	0.95	OVMAAB036098
CNPV*3717A**	1.01	0.92	OVMAAB036098
CNPV*4217A**	1.00	0.96	OVMAAB036098
CSPH*3612A**	1.00	0.94	OVMAAB036098
CSPH*4212A**	1.01	0.95	OVMAAB036098
CAP**3617A**	0.99	0.93	OVMAAB042112
CNPH*3617A**	0.99	0.95	OVMAAB042112
CNPH*4221A**	1.00	0.94	OVMAAB042112
CNPH*4321A**	1.01	0.91	OVMAAB042112
CNPV*3617A**	0.99	0.93	OVMAAB042112
CNPV*3717A**	1.01	0.91	OVMAAB042112
CNPV*4217A**	1.00	0.92	OVMAAB042112
CSPH*3612A**	1.00	0.92	OVMAAB042112
CSPH*4212A**	1.01	0.91	OVMAAB042112

See notes on pg. 62

DETAILED COOLING CAPACITIES# CONTINUED

EVAPORATOR AIR		CONDENSER ENTERING AIR TEMPERATURES °F (°C)																	
		75 (23.9)			85 (29.4)			95 (35)			105 (40.6)			115 (46.1)			125 (51.7)		
CFM	EWB °F (°C)	Capacity MBtuh		Total Sys. KW**	Capacity MBtuh		Total Sys. KW**	Capacity MBtuh		Total Sys. KW**	Capacity MBtuh		Total Sys. KW**	Capacity MBtuh		Total Sys. KW**	Capacity MBtuh		Total Sys. KW**
		Total	Sens‡		Total	Sens‡		Total	Sens‡		Total	Sens‡		Total	Sens‡		Total	Sens‡	
24ACB342A30 Outdoor Section With 42 Indoor Section																			
1225	72 (22.2)	48.51	25.52	3.33	46.40	24.71	3.68	44.17	23.86	4.08	41.83	22.99	4.51	39.30	22.05	4.99	36.50	21.03	5.51
	67 (19.4)	44.49	31.40	3.31	42.53	30.57	3.66	40.46	29.71	4.06	38.30	28.81	4.50	35.96	27.87	4.98	33.41	26.84	5.51
	62 (16.7)	40.85	37.25	3.29	39.08	36.40	3.65	37.24	35.50	4.04	35.33	34.54	4.48	33.39	33.39	4.97	31.44	31.44	5.50
	57 (13.9)	39.76	39.76	3.29	38.32	38.32	3.64	36.79	36.79	4.04	35.17	35.17	4.48	33.41	33.41	4.97	31.45	31.45	5.50
1400	72 (22.2)	49.22	26.65	3.40	47.02	25.82	3.76	44.72	24.97	4.15	42.30	24.08	4.59	39.69	23.14	5.07	36.79	22.10	5.59
	67 (19.4)	45.18	33.25	3.38	43.15	32.40	3.74	41.00	31.53	4.13	38.76	30.63	4.57	36.37	29.68	5.05	33.74	28.63	5.58
	62 (16.7)	41.71	39.81	3.37	39.92	38.90	3.72	38.04	38.04	4.12	36.38	36.38	4.56	34.50	34.50	5.05	32.41	32.41	5.58
	57 (13.9)	41.28	41.28	3.37	39.74	39.74	3.72	38.11	38.11	4.12	36.38	36.38	4.56	34.50	34.50	5.05	32.41	32.41	5.58
1575	72 (22.2)	49.76	27.73	3.48	47.49	26.90	3.84	45.12	26.04	4.23	42.63	25.14	4.67	39.95	24.19	5.14	36.99	23.14	5.66
	67 (19.4)	45.71	35.04	3.46	43.61	34.19	3.82	41.42	33.32	4.21	39.13	32.41	4.65	36.68	31.44	5.13	33.99	30.36	5.65
	62 (16.7)	42.55	42.13	3.45	40.89	40.89	3.80	39.17	39.17	4.20	37.34	37.34	4.64	35.37	35.37	5.12	33.16	33.16	5.65
	57 (13.9)	42.52	42.52	3.45	40.89	40.89	3.80	39.17	39.17	4.20	37.35	37.35	4.64	35.37	35.37	5.12	33.16	33.16	5.65

COOLING INDOOR MODEL	CAPACITY	POWER	FURNACE MODEL
*CAP**4221A**	1.00	1.00	
CAP**4224A**	1.00	1.00	
CAP**4817A**	0.98	0.98	
CAP**4821A**	1.01	1.01	
CAP**4823A**	1.01	1.01	
CAP**4824A**	1.01	1.01	
CAP**6025A**	1.01	1.01	
CNPF*4818A**	1.00	0.98	
CNPH*4221A**	1.00	1.00	
CNPH*4321A**	1.01	1.01	
CNPH*4821A**	1.01	1.01	
CNPV*4217A**	1.00	1.00	
CNPV*4221A**	1.00	1.00	
CNPV*4324A**	1.01	1.01	
CNPV*4821A**	0.99	0.99	
CNPV*4824A**	1.01	1.01	
CSPH*4212A**	0.99	0.99	
CSPH*4812A**	1.00	1.00	
FB4CNF042	1.00	1.00	
FB4CNF042	1.00	1.00	
FB4CNF048	1.00	1.00	
FB4CNF048	1.00	1.00	
FE4AN(B,F)003	0.99	0.94	
FE4AN(B,F)005	1.02	0.96	
FE4ANB006	1.04	0.95	
FV4BN(B,F)003	0.98	0.92	
FV4BN(B,F)005	1.01	0.91	
FV4BNB006	1.02	0.89	
FV4CN(B,F)003	0.99	0.94	
FV4CN(B,F)005	1.01	0.95	
FV4CNB006	1.04	0.95	
FX4CN(B,F)042	1.01	0.95	
FX4CN(B,F)048	1.04	0.93	
FX4DN(B,F)043	1.01	0.97	
FX4DN(B,F)049	1.02	0.94	
FX4DN(B,F)061	1.04	0.95	
FY4ANF042	1.00	1.00	
FY4ANF048	1.01	0.99	

COOLING INDOOR MODEL	CAPACITY	POWER	FURNACE MODEL
FY5BNF042	1.00	1.00	
FY5BNF042	1.00	1.00	
FY5BNF048	1.00	1.00	
FY5BNF048	1.00	1.00	
CNPH*4221A**	0.99	0.97	58CV(A,X)070–12
CNPH*4321A**	1.01	0.97	58CV(A,X)070–12
CNPH*4821A**	1.00	0.98	58CV(A,X)070–12
CSPH*4212A**	0.98	0.96	58CV(A,X)070–12
CSPH*4812A**	0.98	0.96	58CV(A,X)070–12
CAP**4817A**	0.98	0.93	58CV(A,X)090–16
CNPH*4321A**	1.01	0.93	58CV(A,X)090–16
CNPV*4217A**	0.99	0.93	58CV(A,X)090–16
CAP**4221A**	0.99	0.97	58CV(A,X)110–20
CAP**4821A**	1.00	0.96	58CV(A,X)110–20
CNPH*4321A**	1.01	0.93	58CV(A,X)110–20
CNPV*4221A**	0.98	0.93	58CV(A,X)110–20
CNPV*4821A**	1.00	0.96	58CV(A,X)110–20
CAP**4224A**	0.99	0.94	58CV(A,X)135–22
CAP**4824A**	1.00	0.94	58CV(A,X)135–22
CNPH*4321A**	1.01	0.93	58CV(A,X)135–22
CNPV*4324A**	1.01	0.93	58CV(A,X)135–22
CNPV*4824A**	0.99	0.93	58CV(A,X)135–22
CNPH*4321A**	1.01	0.93	58CV(A,X)155–22
CNPV*4324A**	1.01	0.93	58CV(A,X)155–22
CNPH*4221A**	0.98	0.98	58HDV060––12
CNPH*4321A**	1.01	1.01	58HDV060––12
CNPH*4821A**	1.00	1.00	58HDV060––12
CNPV*4217A**	0.99	0.99	58HDV060––12
CNPV*4221A**	0.98	0.98	58HDV060––12
CNPV*4821A**	1.00	1.00	58HDV060––12
CSPH*4212A**	1.01	1.01	58HDV060––12
CSPH*4812A**	1.01	1.01	58HDV060––12
CAP**4823A**	1.01	0.97	58HDV080––20
CNPH*4221A**	0.99	0.94	58HDV080––20
CNPH*4321A**	1.01	0.97	58HDV080––20
CNPH*4821A**	1.01	0.95	58HDV080––20
CNPV*4221A**	0.99	0.99	58HDV080––20
CNPV*4324A**	1.01	0.95	58HDV080––20

COOLING INDOOR MODEL	CAPACITY	POWER	FURNACE MODEL
CNPV*4821A**	1.01	0.95	58HDV080––20
CNPV*4824A**	1.01	0.95	58HDV080––20
CSPH*4212A**	1.01	0.97	58HDV080––20
CSPH*4812A**	1.01	0.97	58HDV080––20
CAP**6025A**	1.02	0.94	58HDV100––20
CNPH*4221A**	0.98	0.93	58HDV100––20
CNPH*4321A**	1.01	0.97	58HDV100––20
CNPH*4821A**	1.00	0.94	58HDV100––20
CNPV*4324A**	1.01	0.93	58HDV100––20
CNPV*4324A**	1.01	0.93	58HDV100––20
CNPV*4824A**	1.00	0.94	58HDV100––20
CSPH*4212A**	1.01	0.97	58HDV100––20
CSPH*4812A**	1.01	0.97	58HDV100––20
CNPH*4321A**	1.01	0.97	58ME(B,C)040–12
CAP**4817A**	1.00	0.94	58ME(B,C)060–12
CNPH*4221A**	0.99	0.94	58ME(B,C)060–12
CNPH*4821A**	1.00	0.94	58ME(B,C)060–12
CNPV*4217A**	0.99	0.93	58ME(B,C)060–12
CSPH*4212A**	0.99	0.93	58ME(B,C)060–12
CSPH*4812A**	1.00	0.94	58ME(B,C)060–12
CAP**4817A**	1.00	0.92	58ME(B,C)080–12
CNPH*4221A**	0.99	0.93	58ME(B,C)080–12
CNPH*4821A**	1.00	0.92	58ME(B,C)080–12
CNPV*4217A**	0.99	0.93	58ME(B,C)080–12
CSPH*4212A**	0.99	0.93	58ME(B,C)080–12
CSPH*4812A**	1.00	0.92	58ME(B,C)080–12
CAP**4817A**	1.00	0.92	58ME(B,C)080–16
CNPH*4221A**	0.98	0.92	58ME(B,C)080–16
CNPH*4821A**	1.00	0.92	58ME(B,C)080–16
CNPV*4217A**	0.99	0.93	58ME(B,C)080–16
CSPH*4212A**	0.99	0.93	58ME(B,C)080–16
CSPH*4812A**	1.00	0.92	58ME(B,C)080–16
CAP**4221A**	0.99	0.91	58ME(B,C)100–20
CAP**4821A**	1.00	0.92	58ME(B,C)100–20
CNPH*4221A**	0.99	0.91	58ME(B,C)100–20
CNPH*4821A**	1.00	0.92	58ME(B,C)100–20
CNPV*4221A**	0.99	0.91	58ME(B,C)100–20
CNPV*4821A**	1.00	0.92	58ME(B,C)100–20

DETAILED COOLING CAPACITIES# CONTINUED

24ACB342A30 Outdoor Section With 42 Indoor Section

COOLING INDOOR MODEL	CAPACITY	POWER	FURNACE MODEL
CSPH*4212A**	0.99	0.91	58ME(B,C)100–20
CSPH*4812A**	1.00	0.92	58ME(B,C)100–20
CAP**4224A**	0.99	0.91	58ME(B,C)120–20
CAP**4824A**	1.00	0.90	58ME(B,C)120–20
CNPH*4221A**	0.99	0.91	58ME(B,C)120–20
CNPH*4821A**	1.00	0.90	58ME(B,C)120–20
CNPV*4824A**	1.00	0.90	58ME(B,C)120–20
CSPH*4212A**	0.99	0.91	58ME(B,C)120–20
CSPH*4812A**	1.00	0.90	58ME(B,C)120–20
CAP**4817A**	1.00	0.94	58MEB040–12
CNPH*4221A**	0.99	0.93	58MEB040–12
CNPH*4821A**	1.00	0.94	58MEB040–12
CNPV*4217A**	0.99	0.93	58MEB040–12
CSPH*4212A**	0.99	0.93	58MEB040–12
CSPH*4812A**	1.00	0.92	58MEB040–12
CNPH*4321A**	1.01	0.97	58MEC060–12
CNPH*4321A**	1.01	0.97	58MEC080–12
CNPH*4321A**	1.01	0.93	58MEC080–16
CNPH*4321A**	1.01	0.93	58MEC100–20
CNPH*4321A**	1.01	0.93	58MEC120–20
CNPV*4324A**	1.01	0.93	58MEC120–20
CAP**4224A**	0.98	0.96	58MV(B,C)040–14
CAP**4824A**	1.00	0.98	58MV(B,C)040–14
CNPH*4221A**	0.98	0.96	58MV(B,C)040–14
CNPH*4821A**	0.99	0.97	58MV(B,C)040–14
CNPV*4824A**	1.00	0.98	58MV(B,C)040–14
CSPH*4212A**	0.98	0.96	58MV(B,C)040–14
CSPH*4812A**	0.98	0.96	58MV(B,C)040–14
CAP**4817A**	0.98	0.93	58MV(B,C)060–14
CNPH*4321A**	1.01	0.97	58MV(B,C)060–14
CNPV*4217A**	0.99	0.94	58MV(B,C)060–14
CAP**4221A**	0.98	0.96	58MV(B,C)080–14
CAP**4821A**	0.99	0.97	58MV(B,C)080–14
CNPH*4321A**	1.01	0.97	58MV(B,C)080–14
CNPV*4221A**	0.98	0.96	58MV(B,C)080–14
CNPV*4821A**	0.99	0.97	58MV(B,C)080–14
CNPH*4321A**	1.01	0.97	58MV(B,C)080–20
CNPH*4321A**	1.01	0.97	58MV(B,C)100–20
CNPV*4221A**	0.96	0.92	58MV(B,C)100–20
CNPV*4821A**	0.99	0.94	58MV(B,C)100–20
CNPH*4321A**	1.01	0.97	58MV(B,C)120–20
CNPV*4324A**	1.01	0.93	58MV(B,C)120–20
CNPH*4321A**	1.01	0.97	58MVB040–14
CNPV*4324A**	1.01	0.97	58MVB040–14
CAP**4817A**	1.00	0.96	58PH*070–16
CNPH*4221A**	0.98	0.98	58PH*070–16
CNPH*4321A**	1.01	1.01	58PH*070–16
CNPH*4821A**	1.00	0.96	58PH*070–16
CNPV*4217A**	0.99	0.97	58PH*070–16
CSPH*4212A**	1.00	0.96	58PH*070–16
CSPH*4812A**	1.00	0.96	58PH*070–16
CAP**4221A**	0.99	0.93	58PH*090–16
CAP**4821A**	1.00	0.92	58PH*090–16
CNPH*4221A**	0.99	0.93	58PH*090–16

COOLING INDOOR MODEL	CAPACITY	POWER	FURNACE MODEL
CNPH*4321A**	1.01	0.93	58PH*090–16
CNPH*4821A**	1.00	0.92	58PH*090–16
CNPV*4221A**	0.99	0.93	58PH*090–16
CNPV*4821A**	1.00	0.92	58PH*090–16
CSPH*4212A**	1.00	0.92	58PH*090–16
CSPH*4812A**	1.01	0.93	58PH*090–16
CAP**4221A**	0.99	0.91	58PH*110–20
CAP**4821A**	1.00	0.92	58PH*110–20
CNPH*4221A**	0.99	0.93	58PH*110–20
CNPH*4321A**	1.01	0.93	58PH*110–20
CNPH*4821A**	1.00	0.92	58PH*110–20
CNPV*4221A**	0.99	0.93	58PH*110–20
CNPV*4821A**	1.00	0.92	58PH*110–20
CSPH*4212A**	1.00	0.92	58PH*110–20
CSPH*4812A**	1.01	0.93	58PH*110–20
CAP**4224A**	0.99	0.93	58PH*135–20
CAP**4824A**	1.00	0.92	58PH*135–20
CNPH*4221A**	0.99	0.93	58PH*135–20
CNPH*4321A**	1.01	0.93	58PH*135–20
CNPH*4821A**	1.00	0.92	58PH*135–20
CNPV*4324A**	1.01	0.93	58PH*135–20
CNPV*4824A**	1.00	0.92	58PH*135–20
CSPH*4212A**	1.00	0.92	58PH*135–20
CSPH*4812A**	1.01	0.93	58PH*135–20
CAP**4224A**	0.98	0.93	58UVB040–14
CAP**4824A**	0.99	0.93	58UVB040–14
CNPV*4824A**	0.99	0.93	58UVB040–14
CAP**4817A**	0.98	0.93	58UVB060–14
CAP**4817A**	0.98	0.93	58UVB060–14
CNPV*4217A**	0.99	0.94	58UVB060–14
CAP**4221A**	0.98	0.96	58UVB080–14
CAP**4221A**	0.98	0.96	58UVB080–14
CAP**4821A**	0.99	0.97	58UVB080–14
CAP**4821A**	0.99	0.97	58UVB080–14
CNPV*4221A**	0.98	0.96	58UVB080–14
CNPV*4221A**	0.98	0.96	58UVB080–14
CNPV*4821A**	0.99	0.97	58UVB080–14
CNPV*4821A**	0.99	0.97	58UVB080–14
CNPV*4221A**	0.96	0.92	58UVB100–20
CNPV*4221A**	0.96	0.92	58UVB100–20
CNPV*4821A**	0.99	0.94	58UVB100–20
CNPV*4821A**	0.99	0.94	58UVB100–20
CNPV*4324A**	1.01	0.93	58UVB120–20
CNPV*4324A**	1.01	0.93	58UVB120–20
CAP**4221A**	0.98	0.92	58VLR120–20
CAP**4821A**	0.99	0.93	58VLR120–20
CNPH*4221A**	0.98	0.92	58VLR120–20
CNPH*4321A**	1.00	0.92	58VLR120–20
CNPH*4821A**	0.99	0.91	58VLR120–20
CNPV*4221A**	0.98	0.92	58VLR120–20
CNPV*4821A**	0.99	0.91	58VLR120–20
CSPH*4212A**	1.00	0.92	58VLR120–20
CSPH*4812A**	1.00	0.92	58VLR120–20
CAP**4221A**	0.98	0.93	58VMR120–20

COOLING INDOOR MODEL	CAPACITY	POWER	FURNACE MODEL
CAP**4821A**	0.99	0.93	58VMR120–20
CNPH*4221A**	0.98	0.93	58VMR120–20
CNPH*4321A**	1.00	0.92	58VMR120–20
CNPH*4821A**	0.99	0.93	58VMR120–20
CNPH*4821A**	0.99	0.93	58VMR120–20
CNPV*4221A**	0.98	0.93	58VMR120–20
CNPV*4821A**	0.99	0.93	58VMR120–20
CSPH*4212A**	0.99	0.93	58VMR120–20
CSPH*4812A**	1.00	0.94	58VMR120–20
CAP**4221A**	0.96	0.93	59*N*A060V17**14
CAP**4817A**	0.99	0.95	59*N*A060V17**14
CAP**4821A**	0.98	0.94	59*N*A060V17**14
CNPH*4221A**	0.96	0.95	59*N*A060V17**14
CNPH*4321A**	0.99	0.94	59*N*A060V17**14
CNPH*4821A**	0.98	0.94	59*N*A060V17**14
CNPV*4217A**	0.98	0.94	59*N*A060V17**14
CNPV*4221A**	0.96	0.95	59*N*A060V17**14
CNPV*4821A**	0.98	0.94	59*N*A060V17**14
CSPH*4212A**	0.99	0.95	59*N*A060V17**14
CSPH*4812A**	0.99	0.95	59*N*A060V17**14
CAP**4221A**	0.96	0.93	59*N*A080V17**14
CAP**4817A**	0.99	0.94	59*N*A080V17**14
CAP**4821A**	0.98	0.93	59*N*A080V17**14
CNPH*4221A**	0.96	0.93	59*N*A080V17**14
CNPH*4321A**	1.00	0.93	59*N*A080V17**14
CNPH*4821A**	0.99	0.94	59*N*A080V17**14
CNPV*4217A**	0.98	0.94	59*N*A080V17**14
CNPV*4221A**	0.96	0.93	59*N*A080V17**14
CNPV*4821A**	0.99	0.94	59*N*A080V17**14
CSPH*4212A**	0.99	0.94	59*N*A080V17**14
CSPH*4812A**	0.99	0.94	59*N*A080V17**14
CAP**4221A**	0.96	0.92	59*N*A100V21**20
CAP**4224A**	0.96	0.92	59*N*A100V21**20
CAP**4821A**	0.99	0.92	59*N*A100V21**20
CAP**4823A**	0.99	0.92	59*N*A100V21**20
CAP**4824A**	0.99	0.92	59*N*A100V21**20
CNPH*4221A**	0.96	0.92	59*N*A100V21**20
CNPH*4321A**	1.00	0.93	59*N*A100V21**20
CNPH*4821A**	0.99	0.92	59*N*A100V21**20
CNPV*4221A**	0.96	0.92	59*N*A100V21**20
CNPV*4324A**	1.00	0.92	59*N*A100V21**20
CNPV*4821A**	0.99	0.92	59*N*A100V21**20
CNPV*4824A**	0.99	0.92	59*N*A100V21**20
CSPH*4212A**	0.99	0.92	59*N*A100V21**20
CSPH*4812A**	0.99	0.92	59*N*A100V21**20
CAP**4224A**	0.96	0.90	59*N*A120V24**22
CAP**4823A**	0.99	0.92	59*N*A120V24**22
CAP**4824A**	0.99	0.91	59*N*A120V24**22
CNPH*4221A**	0.96	0.90	59*N*A120V24**22
CNPH*4321A**	1.00	0.92	59*N*A120V24**22
CNPH*4821A**	0.99	0.91	59*N*A120V24**22
CNPV*4324A**	1.00	0.92	59*N*A120V24**22
CNPV*4824A**	0.99	0.91	59*N*A120V24**22
CSPH*4212A**	0.99	0.91	59*N*A120V24**22

DETAILED COOLING CAPACITIES# CONTINUED

24ACB342A30 Outdoor Section With 42 Indoor Section

COOLING INDOOR MODEL	CAPACITY	POWER	FURNACE MODEL
CSPH*4812A**	0.99	0.91	59*N*A120V24**22
CAP**4221A**	0.98	0.96	59*P5A060E17**14
CAP**4817A**	1.00	0.96	59*P5A060E17**14
CAP**4821A**	0.99	0.95	59*P5A060E17**14
CNPH*4221A**	0.98	0.96	59*P5A060E17**14
CNPH*4321A**	1.00	0.96	59*P5A060E17**14
CNPH*4821A**	0.99	0.95	59*P5A060E17**14
CNPV*4217A**	0.98	0.94	59*P5A060E17**14
CNPV*4221A**	0.98	0.96	59*P5A060E17**14
CNPV*4821A**	0.99	0.95	59*P5A060E17**14
CSPH*4212A**	0.99	0.95	59*P5A060E17**14
CSPH*4812A**	1.00	0.96	59*P5A060E17**14
CAP**4221A**	0.98	0.94	59*P5A080E17**16
CAP**4817A**	1.00	0.96	59*P5A080E17**16
CAP**4821A**	0.99	0.95	59*P5A080E17**16
CNPH*4221A**	0.98	0.96	59*P5A080E17**16
CNPH*4321A**	1.01	0.97	59*P5A080E17**16
CNPH*4821A**	1.00	0.96	59*P5A080E17**16
CNPV*4217A**	0.98	0.94	59*P5A080E17**16
CNPV*4221A**	0.98	0.96	59*P5A080E17**16
CNPV*4821A**	1.00	0.96	59*P5A080E17**16
CSPH*4212A**	1.00	0.96	59*P5A080E17**16
CSPH*4812A**	1.00	0.96	59*P5A080E17**16
CAP**4221A**	0.98	0.94	59*P5A100E21**16
CAP**4224A**	0.98	0.94	59*P5A100E21**16
CAP**4821A**	0.99	0.94	59*P5A100E21**16
CAP**4823A**	0.99	0.94	59*P5A100E21**16
CAP**4824A**	0.99	0.94	59*P5A100E21**16
CNPH*4221A**	0.96	0.93	59*P5A100E21**16
CNPH*4321A**	1.00	0.93	59*P5A100E21**16
CNPH*4821A**	0.99	0.92	59*P5A100E21**16
CNPV*4221A**	0.96	0.93	59*P5A100E21**16
CNPV*4324A**	1.01	0.94	59*P5A100E21**16
CNPV*4821A**	0.99	0.92	59*P5A100E21**16
CNPV*4824A**	0.99	0.92	59*P5A100E21**16
CSPH*4212A**	0.99	0.94	59*P5A100E21**16
CSPH*4812A**	1.00	0.93	59*P5A100E21**16
CAP**4224A**	0.99	0.92	59*P5A120E24**22
CAP**4823A**	1.00	0.93	59*P5A120E24**22
CAP**4824A**	1.00	0.93	59*P5A120E24**22
CNPH*4221A**	0.98	0.93	59*P5A120E24**22
CNPH*4321A**	1.01	0.93	59*P5A120E24**22
CNPH*4821A**	1.00	0.93	59*P5A120E24**22
CNPV*4324A**	1.02	0.94	59*P5A120E24**22
CNPV*4824A**	1.00	0.93	59*P5A120E24**22
CSPH*4212A**	1.00	0.93	59*P5A120E24**22
CSPH*4812A**	1.01	0.94	59*P5A120E24**22
CAP**4221A**	0.98	0.98	OVLAAB048112
CAP**4821A**	1.00	1.00	OVLAAB048112
CNPH*4221A**	0.98	0.98	OVLAAB048112
CNPH*4321A**	1.01	0.97	OVLAAB048112
CNPH*4821A**	1.00	0.96	OVLAAB048112
CNPV*4221A**	0.98	0.98	OVLAAB048112
CNPV*4821A**	1.00	0.96	OVLAAB048112

COOLING INDOOR MODEL	CAPACITY	POWER	FURNACE MODEL
CSPH*4212A**	1.00	1.00	OVLAAB048112
CSPH*4812A**	1.00	0.96	OVLAAB048112
CNPH*4221A**	1.00	0.96	OVLAAB060154
CNPH*4321A**	1.01	0.95	OVLAAB060154
CNPH*4821A**	1.01	0.95	OVLAAB060154
CSPH*4212A**	1.01	0.95	OVLAAB060154
CSPH*4812A**	1.01	0.95	OVLAAB060154
CAP**4817A**	1.00	0.96	OVMAAB042112
CNPH*4221A**	0.98	0.98	OVMAAB042112
CNPH*4321A**	1.00	0.94	OVMAAB042112
CNPH*4821A**	0.99	0.93	OVMAAB042112
CNPV*4217A**	0.98	0.98	OVMAAB042112
CSPH*4212A**	1.00	0.96	OVMAAB042112
CSPH*4812A**	1.00	0.96	OVMAAB042112

See notes on pg. 62

DETAILED COOLING CAPACITIES# CONTINUED

EVAPORATOR AIR		CONDENSER ENTERING AIR TEMPERATURES °F (°C)																	
		75 (23.9)			85 (29.4)			95 (35)			105 (40.6)			115 (46.1)			125 (51.7)		
CFM	EWB °F (°C)	Capacity MBtuh		Total Sys. KW**	Capacity MBtuh		Total Sys. KW**	Capacity MBtuh		Total Sys. KW**	Capacity MBtuh		Total Sys. KW**	Capacity MBtuh		Total Sys. KW**	Capacity MBtuh		Total Sys. KW**
		Total	Sens‡		Total	Sens‡		Total	Sens‡		Total	Sens‡		Total	Sens‡		Total	Sens‡	
24ACB348A30 Outdoor Section With 48 Indoor Section																			
1400	72 (22.2)	55.04	28.49	3.35	52.62	27.54	3.75	50.08	26.56	4.20	47.38	25.54	4.72	44.49	24.45	5.30	41.25	23.26	6.01
	67 (19.4)	49.86	34.52	3.35	47.63	33.55	3.75	45.27	32.56	4.21	42.77	31.51	4.73	40.10	30.41	5.33	37.08	29.19	6.08
	62 (16.7)	45.26	40.60	3.35	43.30	39.77	3.76	41.26	38.91	4.22	39.15	38.04	4.74	37.27	37.27	5.34	35.05	35.05	6.09
	57 (13.9)	44.65	44.65	3.35	42.99	42.99	3.76	41.23	41.23	4.22	39.35	39.35	4.74	37.33	37.33	5.34	35.06	35.06	6.09
1600	72 (22.2)	56.06	29.65	3.42	53.54	28.69	3.82	50.89	27.69	4.27	48.09	26.65	4.79	45.09	25.55	5.36	41.76	24.34	6.06
	67 (19.4)	50.79	36.35	3.42	48.45	35.38	3.82	46.00	34.36	4.28	43.40	33.30	4.80	40.63	32.17	5.39	37.50	30.93	6.14
	62 (16.7)	46.36	43.45	3.42	44.40	42.66	3.83	42.52	41.92	4.17	40.77	40.77	4.81	38.63	38.63	5.40	36.19	36.19	6.15
	57 (13.9)	46.41	46.41	3.42	44.64	44.64	3.83	42.77	42.77	4.28	40.78	40.78	4.81	38.63	38.63	5.40	36.19	36.19	6.15
1800	72 (22.2)	56.83	30.71	3.49	54.22	29.73	3.89	51.49	28.72	4.34	48.61	27.66	4.85	45.53	26.54	5.43	42.11	25.32	6.12
	67 (19.4)	51.48	38.05	3.49	49.06	37.05	3.89	46.53	36.02	4.35	43.86	34.94	4.87	41.00	33.80	5.46	37.80	32.58	6.20
	62 (16.7)	47.45	46.27	3.50	45.69	45.69	3.90	44.03	44.03	4.36	41.94	41.94	4.88	39.69	39.69	5.47	37.12	37.12	6.21
	57 (13.9)	47.87	47.87	3.49	46.01	46.01	3.90	44.04	44.04	4.36	41.95	41.95	4.88	39.69	39.69	5.47	37.13	37.13	6.21

COOLING INDOOR MODEL	CAPACITY	POWER	FURNACE MODEL
*CAP**4821A**	1.00	1.00	
CAP**4817A**	0.99	0.99	
CAP**4823A**	1.00	1.00	
CAP**4824A**	1.00	1.00	
CAP**6021A**	1.02	1.02	
CAP**6024A**	1.02	1.02	
CAP**6025A**	1.02	1.02	
CNPF*4818A**	0.98	0.98	
CNPH*4821A**	1.00	1.00	
CNPH*6024A**	1.02	1.02	
CNPH*6124A**	1.01	1.01	
CNPV*4221A**	0.97	0.97	
CNPV*4821A**	1.00	1.00	
CNPV*4824A**	1.00	1.00	
CNPV*6024A**	1.02	1.02	
CNPV*6124A**	1.01	1.01	
CSPH*4812A**	0.99	0.99	
CSPH*6012A**	1.00	1.00	
FB4CNF048	0.99	0.99	
FB4CNF048	0.99	0.99	
FB4CNF060	1.00	1.00	
FE4AN(B,F)005	1.01	0.97	
FE4ANB006	1.02	0.96	
FV4BN(B,F)005	1.00	0.96	
FV4BNB006	1.01	0.95	
FV4CN(B,F)005	1.01	0.97	
FV4CNB006	1.02	0.96	
FX4CN(B,F)048	1.01	0.98	
FX4CN(B,F)060	1.03	0.97	
FX4DN(B,F)049	1.01	0.97	
FX4DN(B,F)061	1.02	0.97	
FY4ANB060	1.01	1.01	
FY4ANF048	0.99	1.01	
FY5BNB060	1.01	1.01	
FY5BNF048	1.00	1.00	
FY5BNF048	1.00	1.00	
CAP**4817A**	0.99	0.97	58CV(A,X)090–16
CNPH*4821A**	0.98	0.96	58CV(A,X)090–16

COOLING INDOOR MODEL	CAPACITY	POWER	FURNACE MODEL
CNPH*6024A**	1.00	0.98	58CV(A,X)090–16
CNPH*6124A**	1.00	0.96	58CV(A,X)090–16
CSPH*4812A**	0.97	0.95	58CV(A,X)090–16
CSPH*6012A**	0.98	0.96	58CV(A,X)090–16
CAP**4821A**	0.98	0.96	58CV(A,X)110–20
CAP**6021A**	1.03	1.01	58CV(A,X)110–20
CNPH*4821A**	0.99	0.97	58CV(A,X)110–20
CNPH*6024A**	1.00	0.98	58CV(A,X)110–20
CNPH*6124A**	1.01	0.97	58CV(A,X)110–20
CNPV*4221A**	0.97	0.95	58CV(A,X)110–20
CNPV*4821A**	0.98	0.96	58CV(A,X)110–20
CAP**4824A**	0.99	0.97	58CV(A,X)135–22
CAP**6024A**	1.01	0.97	58CV(A,X)135–22
CNPH*6124A**	1.01	0.97	58CV(A,X)135–22
CNPV*4824A**	0.99	0.97	58CV(A,X)135–22
CNPV*6024A**	1.00	0.96	58CV(A,X)135–22
CNPV*6124A**	1.01	0.93	58CV(A,X)135–22
CNPH*6124A**	1.01	0.93	58CV(A,X)155–22
CNPV*6124A**	1.01	0.93	58CV(A,X)155–22
CAP**4823A**	0.99	0.99	58HDV080––20
CNPH*4821A**	0.98	0.98	58HDV080––20
CNPH*6024A**	1.00	1.00	58HDV080––20
CNPH*6124A**	1.01	1.01	58HDV080––20
CNPV*4821A**	0.98	0.98	58HDV080––20
CNPV*4824A**	0.98	0.98	58HDV080––20
CNPV*6024A**	1.00	1.00	58HDV080––20
CNPV*6124A**	1.01	1.01	58HDV080––20
CSPH*4812A**	1.00	1.00	58HDV080––20
CSPH*6012A**	1.01	1.01	58HDV080––20
CAP**6025A**	1.00	1.00	58HDV100––20
CNPH*4821A**	0.98	0.98	58HDV100––20
CNPH*6024A**	1.00	1.00	58HDV100––20
CNPH*6124A**	1.01	1.01	58HDV100––20
CNPV*4824A**	0.98	0.98	58HDV100––20
CNPV*6024A**	1.00	1.00	58HDV100––20
CNPV*6124A**	1.01	0.97	58HDV100––20
CNPV*6124A**	1.01	0.97	58HDV100––20
CSPH*4812A**	0.99	0.99	58HDV100––20

COOLING INDOOR MODEL	CAPACITY	POWER	FURNACE MODEL
CSPH*6012A**	1.01	1.01	58HDV100––20
CAP**4817A**	0.99	0.97	58ME(B,C)080–16
CNPH*4821A**	0.99	0.97	58ME(B,C)080–16
CNPH*6024A**	1.00	0.96	58ME(B,C)080–16
CSPH*4812A**	0.99	0.97	58ME(B,C)080–16
CSPH*6012A**	1.00	0.96	58ME(B,C)080–16
CAP**4821A**	0.98	0.94	58ME(B,C)100–20
CAP**6021A**	1.00	0.94	58ME(B,C)100–20
CNPH*4821A**	0.98	0.94	58ME(B,C)100–20
CNPH*6024A**	1.00	0.94	58ME(B,C)100–20
CNPV*4821A**	0.98	0.94	58ME(B,C)100–20
CSPH*4812A**	0.98	0.94	58ME(B,C)100–20
CSPH*6012A**	1.00	0.94	58ME(B,C)100–20
CAP**4824A**	0.99	0.95	58ME(B,C)120–20
CAP**6024A**	1.00	0.94	58ME(B,C)120–20
CNPH*4821A**	0.99	0.95	58ME(B,C)120–20
CNPH*6024A**	1.00	0.94	58ME(B,C)120–20
CNPV*4824A**	0.99	0.95	58ME(B,C)120–20
CNPV*6024A**	1.00	0.94	58ME(B,C)120–20
CSPH*4812A**	0.99	0.95	58ME(B,C)120–20
CSPH*6012A**	1.00	0.94	58ME(B,C)120–20
CNPH*6124A**	1.01	1.01	58MEC080–16
CNPH*6124A**	1.01	0.97	58MEC100–20
CNPH*6124A**	1.01	0.97	58MEC120–20
CNPV*6124A**	1.01	0.93	58MEC120–20
CAP**4821A**	0.98	0.98	58MV(B,C)080–20
CAP**6021A**	1.00	0.98	58MV(B,C)080–20
CNPH*4821A**	0.98	0.98	58MV(B,C)080–20
CNPH*6024A**	1.00	0.98	58MV(B,C)080–20
CNPH*6124A**	1.00	1.00	58MV(B,C)080–20
CNPV*4221A**	0.97	0.97	58MV(B,C)080–20
CNPV*4821A**	0.98	0.98	58MV(B,C)080–20
CSPH*4812A**	0.97	0.97	58MV(B,C)080–20
CSPH*6012A**	0.98	0.96	58MV(B,C)080–20
CAP**4821A**	0.98	0.94	58MV(B,C)100–20
CNPH*4821A**	0.98	0.96	58MV(B,C)100–20
CNPH*6024A**	1.00	0.98	58MV(B,C)100–20
CNPH*6124A**	1.01	1.01	58MV(B,C)100–20

DETAILED COOLING CAPACITIES# CONTINUED

24ACB348A30 Outdoor Section With 48 Indoor Section

COOLING INDOOR MODEL	CAPACITY	POWER	FURNACE MODEL
CNPV*4821A**	0.98	0.96	58MV(B,C)100–20
CAP**4824A**	0.98	0.96	58MV(B,C)120–20
CAP**6024A**	1.00	0.96	58MV(B,C)120–20
CNPH*6124A**	1.01	0.97	58MV(B,C)120–20
CNPV*4824A**	0.99	0.97	58MV(B,C)120–20
CNPV*6024A**	1.00	0.98	58MV(B,C)120–20
CNPV*6124A**	1.01	0.97	58MV(B,C)120–20
CNPH*6024A**	0.99	1.01	58PH*070–16
CNPH*6024A**	0.99	0.99	58PH*070–16
CNPH*6124A**	1.00	1.00	58PH*070–16
CSPH*6012A**	1.00	1.00	58PH*070–16
CAP**4821A**	0.98	0.94	58PH*090–16
CAP**6021A**	1.01	0.95	58PH*090–16
CNPH*4821A**	0.99	0.95	58PH*090–16
CNPH*6024A**	1.00	0.94	58PH*090–16
CNPH*6124A**	1.01	0.97	58PH*090–16
CNPV*4821A**	0.99	0.95	58PH*090–16
CSPH*4812A**	0.99	0.95	58PH*090–16
CSPH*6012A**	1.00	0.94	58PH*090–16
CAP**4821A**	0.98	0.92	58PH*110–20
CAP**6021A**	1.01	0.93	58PH*110–20
CNPH*4821A**	0.99	0.93	58PH*110–20
CNPH*6024A**	1.00	0.94	58PH*110–20
CNPH*6124A**	1.01	0.97	58PH*110–20
CNPV*4821A**	0.99	0.93	58PH*110–20
CSPH*4812A**	0.99	0.93	58PH*110–20
CSPH*6012A**	1.00	0.92	58PH*110–20
CAP**4824A**	0.98	0.96	58PH*135–20
CAP**6024A**	1.00	0.94	58PH*135–20
CNPH*4821A**	0.99	0.95	58PH*135–20
CNPH*6024A**	1.00	0.94	58PH*135–20
CNPH*6124A**	1.01	0.97	58PH*135–20
CNPV*4824A**	0.99	0.97	58PH*135–20
CNPV*6024A**	1.00	0.94	58PH*135–20
CNPV*6124A**	1.01	0.97	58PH*135–20
CSPH*4812A**	0.99	0.97	58PH*135–20
CSPH*6012A**	1.00	0.94	58PH*135–20
CAP**4821A**	0.98	0.98	58UVB080–20
CAP**4821A**	0.98	0.98	58UVB080–20
CAP**6021A**	1.00	0.98	58UVB080–20
CAP**6021A**	1.00	0.98	58UVB080–20
CNPV*4221A**	0.97	0.97	58UVB080–20
CNPV*4821A**	0.98	0.98	58UVB080–20
CNPV*4821A**	0.98	0.98	58UVB080–20
CAP**4821A**	0.98	0.96	58UVB100–20
CAP**4821A**	0.98	0.94	58UVB100–20
CNPV*4821A**	0.98	0.96	58UVB100–20
CAP**4824A**	0.98	0.96	58UVB120–20
CAP**4824A**	0.98	0.96	58UVB120–20
CAP**6024A**	1.00	0.96	58UVB120–20
CAP**6024A**	1.00	0.96	58UVB120–20
CNPV*4824A**	0.98	0.96	58UVB120–20
CNPV*4824A**	0.99	0.97	58UVB120–20
CNPV*6024A**	1.00	0.98	58UVB120–20

COOLING INDOOR MODEL	CAPACITY	POWER	FURNACE MODEL
CNPV*6024A**	1.00	0.98	58UVB120–20
CNPV*6124A**	1.01	0.97	58UVB120–20
CNPV*6124A**	1.01	0.97	58UVB120–20
CAP**4821A**	0.97	0.97	58VLR120–20
CAP**6021A**	0.99	0.95	58VLR120–20
CNPH*4821A**	0.98	0.98	58VLR120–20
CNPH*6024A**	0.99	0.95	58VLR120–20
CNPH*6124A**	1.00	0.96	58VLR120–20
CNPV*4821A**	0.98	0.98	58VLR120–20
CSPH*4812A**	0.98	0.98	58VLR120–20
CSPH*6012A**	1.00	0.96	58VLR120–20
CAP**4821A**	0.97	0.97	58VMR120–20
CAP**6021A**	0.99	0.99	58VMR120–20
CNPH*4821A**	0.97	0.97	58VMR120–20
CNPH*6024A**	0.99	0.99	58VMR120–20
CNPH*6124A**	0.99	0.99	58VMR120–20
CNPV*4821A**	0.97	0.97	58VMR120–20
CSPH*4812A**	0.98	0.98	58VMR120–20
CSPH*6012A**	1.00	1.00	58VMR120–20
CAP**4821A**	0.97	0.97	59*N*A100V21**20
CAP**4823A**	0.97	0.97	59*N*A100V21**20
CAP**4824A**	0.97	0.97	59*N*A100V21**20
CAP**6021A**	0.99	0.95	59*N*A100V21**20
CAP**6024A**	0.99	0.95	59*N*A100V21**20
CAP**6025A**	0.99	0.95	59*N*A100V21**20
CNPH*4821A**	0.97	0.97	59*N*A100V21**20
CNPH*6024A**	0.98	0.94	59*N*A100V21**20
CNPH*6124A**	0.99	0.95	59*N*A100V21**20
CNPV*4821A**	0.97	0.97	59*N*A100V21**20
CNPV*4824A**	0.97	0.97	59*N*A100V21**20
CNPV*6024A**	0.98	0.94	59*N*A100V21**20
CNPV*6124A**	1.00	0.96	59*N*A100V21**20
CSPH*4812A**	0.98	0.98	59*N*A100V21**20
CSPH*6012A**	0.99	0.95	59*N*A100V21**20
CAP**4823A**	0.97	0.95	59*N*A120V24**22
CAP**4824A**	0.97	0.93	59*N*A120V24**22
CAP**6024A**	0.99	0.95	59*N*A120V24**22
CAP**6025A**	0.99	0.95	59*N*A120V24**22
CNPH*4821A**	0.97	0.93	59*N*A120V24**22
CNPH*6024A**	0.98	0.94	59*N*A120V24**22
CNPH*6124A**	0.99	0.95	59*N*A120V24**22
CNPV*4824A**	0.97	0.93	59*N*A120V24**22
CNPV*6024A**	0.98	0.94	59*N*A120V24**22
CNPV*6124A**	1.00	0.93	59*N*A120V24**22
CSPH*4812A**	0.98	0.94	59*N*A120V24**22
CSPH*6012A**	0.99	0.95	59*N*A120V24**22
CNPH*4821A**	0.97	0.97	59*P5A080E17**16
CNPH*6024A**	0.99	0.99	59*P5A080E17**16
CNPV*4821A**	0.97	0.97	59*P5A080E17**16
CSPH*6012A**	0.99	0.99	59*P5A080E17**16
CAP**4821A**	0.97	0.97	59*P5A100E21**16
CAP**4823A**	0.97	0.97	59*P5A100E21**16
CAP**4824A**	0.97	0.97	59*P5A100E21**16
CAP**6021A**	0.99	0.97	59*P5A100E21**16

COOLING INDOOR MODEL	CAPACITY	POWER	FURNACE MODEL
CAP**6024A**	0.99	0.97	59*P5A100E21**16
CAP**6025A**	0.99	0.97	59*P5A100E21**16
CNPH*4821A**	0.97	0.97	59*P5A100E21**16
CNPH*6024A**	0.99	0.97	59*P5A100E21**16
CNPH*6124A**	0.99	0.95	59*P5A100E21**16
CNPV*4821A**	0.97	0.97	59*P5A100E21**16
CNPV*4824A**	0.97	0.97	59*P5A100E21**16
CNPV*6024A**	0.99	0.97	59*P5A100E21**16
CNPV*6124A**	1.00	0.96	59*P5A100E21**16
CSPH*4812A**	0.98	0.98	59*P5A100E21**16
CSPH*6012A**	1.00	0.96	59*P5A100E21**16
CAP**4823A**	0.97	0.95	59*P5A120E24**22
CAP**4824A**	0.98	0.96	59*P5A120E24**22
CAP**6024A**	1.00	0.96	59*P5A120E24**22
CAP**6025A**	1.00	0.96	59*P5A120E24**22
CNPH*4821A**	0.98	0.96	59*P5A120E24**22
CNPH*6024A**	1.00	0.96	59*P5A120E24**22
CNPH*6124A**	1.00	0.96	59*P5A120E24**22
CNPV*4824A**	0.98	0.96	59*P5A120E24**22
CNPV*6024A**	1.00	0.96	59*P5A120E24**22
CNPV*6124A**	1.01	0.97	59*P5A120E24**22
CSPH*4812A**	0.98	0.94	59*P5A120E24**22
CSPH*6012A**	1.00	0.96	59*P5A120E24**22
CAP**4821A**	0.97	0.99	OVLAAB048112
CAP**6021A**	0.99	0.99	OVLAAB048112
CNPH*4821A**	0.98	1.00	OVLAAB048112
CNPH*6024A**	0.99	0.99	OVLAAB048112
CNPH*6124A**	1.00	1.00	OVLAAB048112
CNPV*4821A**	0.98	1.00	OVLAAB048112
CSPH*4812A**	0.98	1.00	OVLAAB048112
CSPH*6012A**	1.00	1.00	OVLAAB048112
CNPH*4821A**	0.99	0.99	OVLAAB060154
CNPH*6024A**	1.01	1.01	OVLAAB060154
CNPH*6124A**	1.02	1.02	OVLAAB060154
CSPH*4812A**	1.00	1.00	OVLAAB060154
CSPH*6012A**	1.02	1.02	OVLAAB060154

See notes on pg. 62

DETAILED COOLING CAPACITIES# CONTINUED

EVAPORATOR AIR		CONDENSER ENTERING AIR TEMPERATURES °F (°C)																	
		75 (23.9)			85 (29.4)			95 (35)			105 (40.6)			115 (46.1)			125 (51.7)		
CFM	EWB °F (°C)	Capacity MBtuh		Total Sys. KW**	Capacity MBtuh		Total Sys. KW**	Capacity MBtuh		Total Sys. KW**	Capacity MBtuh		Total Sys. KW**	Capacity MBtuh		Total Sys. KW**	Capacity MBtuh		Total Sys. KW**
		Total	Sens‡		Total	Sens‡		Total	Sens‡		Total	Sens‡		Total	Sens‡		Total	Sens‡	
24ACB360A30 Outdoor Section With 60 Indoor Section																			
1750	72 (22.2)	67.65	35.66	4.15	64.56	34.48	4.58	61.30	33.25	5.06	57.89	31.98	5.58	54.20	30.63	6.15	50.10	29.15	6.77
	67 (19.4)	62.07	43.94	4.10	59.24	42.75	4.53	56.25	41.50	5.01	53.12	40.22	5.54	49.74	38.85	6.11	46.03	37.38	6.74
	62 (16.7)	57.01	52.17	4.06	54.45	50.95	4.49	51.79	49.66	4.97	49.04	48.27	5.50	46.34	46.34	6.08	43.50	43.50	6.72
	57 (13.9)	55.50	55.50	4.04	53.42	53.42	4.48	51.22	51.22	4.96	48.89	48.89	5.50	46.35	46.35	6.08	43.51	43.51	6.72
2000	72 (22.2)	68.69	37.30	4.26	65.46	36.09	4.69	62.07	34.85	5.16	58.54	33.56	5.69	54.71	32.19	6.26	50.48	30.69	6.87
	67 (19.4)	63.07	46.60	4.21	60.11	45.38	4.64	57.00	44.12	5.11	53.75	42.82	5.64	50.27	41.45	6.21	46.44	39.94	6.84
	62 (16.7)	58.17	55.80	4.16	55.57	54.47	4.59	52.95	52.95	5.07	50.49	50.49	5.61	47.78	47.78	6.19	44.74	44.74	6.82
	57 (13.9)	57.57	57.57	4.16	55.35	55.35	4.59	52.99	52.99	5.07	50.50	50.50	5.61	47.78	47.78	6.19	44.74	44.74	6.82
2250	72 (22.2)	69.44	38.83	4.36	66.10	37.62	4.79	62.61	36.36	5.27	58.97	35.06	5.79	55.04	33.67	6.36	50.70	32.16	6.97
	67 (19.4)	63.79	49.12	4.31	60.73	47.89	4.74	57.53	46.62	5.21	54.20	45.31	5.74	50.63	43.90	6.31	46.72	42.34	6.93
	62 (16.7)	59.18	59.18	4.27	56.90	56.90	4.70	54.41	54.41	5.18	51.77	51.77	5.72	48.91	48.91	6.30	45.70	45.70	6.93
	57 (13.9)	59.25	59.25	4.27	56.90	56.90	4.70	54.42	54.42	5.18	51.78	51.78	5.72	48.91	48.91	6.30	45.70	45.70	6.93

COOLING INDOOR MODEL	CAPACITY	POWER	FURNACE MODEL
*CAP**6024A**	1.00	1.00	
CAP**6021A**	0.98	0.98	
CAP**6025A**	1.00	1.00	
CNPH*6024A**	0.97	0.97	
CNPH*6124A**	0.98	0.98	
CNPV*6024A**	0.99	0.99	
CNPV*6124A**	0.99	0.99	
CSPH*6012A**	0.98	0.98	
FB4CNF060	0.99	0.99	
FE4ANB006	0.99	0.97	
FV4BNB006	0.99	0.95	
FV4CNB006	0.99	0.97	
FX4CN(B,F)060	1.00	0.97	
FX4DN(B,F)061	1.00	1.00	
FY4ANB060	0.97	0.97	
FY5BNB060	1.01	1.05	
CAP**6021A**	0.97	0.97	58CV(A,X)110–20
CNPH*6124A**	0.98	0.98	58CV(A,X)110–20
CSPH*6012A**	0.97	0.97	58CV(A,X)110–20
CAP**6024A**	0.98	0.98	58CV(A,X)135–22
CNPH*6024A**	0.97	0.96	58CV(A,X)135–22
CNPH*6124A**	0.98	0.98	58CV(A,X)135–22
CNPV*6024A**	0.97	0.97	58CV(A,X)135–22
CNPV*6124A**	0.99	0.99	58CV(A,X)135–22
CSPH*6012A**	0.97	0.95	58CV(A,X)135–22
CAP**6024A**	0.98	0.97	58CV(A,X)155–22
CNPH*6024A**	0.98	0.97	58CV(A,X)155–22
CNPH*6124A**	0.98	0.98	58CV(A,X)155–22
CNPV*6024A**	0.98	0.97	58CV(A,X)155–22
CNPV*6124A**	0.99	0.99	58CV(A,X)155–22
CSPH*6012A**	0.97	0.95	58CV(A,X)155–22
CNPH*6024A**	0.97	1.01	58HDV080––20
CNPH*6124A**	0.97	1.02	58HDV080––20
CNPV*6024A**	0.97	1.01	58HDV080––20
CNPV*6124A**	0.98	1.01	58HDV080––20
CAP**6025A**	0.97	0.98	58HDV100––20
CNPH*6024A**	0.97	0.99	58HDV100––20
CNPH*6124A**	0.98	0.99	58HDV100––20
CNPV*6024A**	0.97	0.99	58HDV100––20
CNPV*6124A**	0.98	1.00	58HDV100––20
CNPV*6124A**	0.99	0.99	58HDV100––20
CSPH*6012A**	0.98	0.98	58HDV100––20
CNPH*6024A**	0.97	0.97	58ME(B,C)080–16
CSPH*6012A**	0.97	0.97	58ME(B,C)080–16
CAP**6021A**	0.97	0.96	58ME(B,C)100–20
CNPH*6024A**	0.97	0.95	58ME(B,C)100–20
CSPH*6012A**	0.97	0.96	58ME(B,C)100–20
CAP**6024A**	0.97	0.96	58ME(B,C)120–20
CNPH*6024A**	0.97	0.96	58ME(B,C)120–20
CNPV*6024A**	0.97	0.96	58ME(B,C)120–20
CSPH*6012A**	0.97	0.96	58ME(B,C)120–20
CNPH*6124A**	0.97	0.97	58MEC080–16
CNPH*6124A**	0.97	0.97	58MEC100–20
CNPH*6124A**	0.98	0.98	58MEC120–20
CNPV*6124A**	0.99	0.99	58MEC120–20
CAP**6021A**	0.97	0.99	58MV(B,C)080–20
CAP**6021A**	0.97	0.98	58MV(B,C)100–20
CAP**6024A**	0.97	0.97	58MV(B,C)120–20
CNPH*6124A**	0.97	0.97	58MV(B,C)120–20
CNPV*6124A**	0.98	0.98	58MV(B,C)120–20
CNPH*6024A**	0.97	0.97	58PH*090–16
CSPH*6012A**	0.97	0.97	58PH*090–16
CAP**6021A**	0.97	0.97	58PH*110–20
CNPH*6024A**	0.97	0.97	58PH*110–20
CNPH*6124A**	0.98	0.98	58PH*110–20
CSPH*6012A**	0.98	0.94	58PH*110–20
CAP**6024A**	0.97	0.97	58PH*135–20
CNPH*6024A**	0.97	0.97	58PH*135–20
CNPH*6124A**	0.97	0.97	58PH*135–20
CNPV*6024A**	0.97	0.97	58PH*135–20
CNPV*6124A**	0.99	0.99	58PH*135–20
CSPH*6012A**	0.97	0.97	58PH*135–20
CAP**6021A**	0.97	0.99	58UVB080–20
CAP**6021A**	0.97	0.98	58UVB100–20
CAP**6024A**	0.97	0.97	58UVB120–20
CNPV*6124A**	0.98	0.98	58UVB120–20
CNPV*6124A**	0.98	0.98	58UVB120–20
CAP**6021A**	0.97	0.98	58VLR120–20
CNPH*6024A**	0.97	0.97	58VLR120–20
CNPH*6124A**	0.97	0.97	58VLR120–20
CSPH*6012A**	0.97	0.97	58VLR120–20
CAP**6021A**	0.97	1.00	58VMR120–20
CNPH*6024A**	0.97	1.00	58VMR120–20
CNPH*6124A**	0.97	1.00	58VMR120–20
CSPH*6012A**	0.97	1.00	58VMR120–20
CAP**6024A**	0.97	0.97	59*N*A120V24**22
CAP**6025A**	0.97	0.97	59*N*A120V24**22
CNPH*6024A**	0.97	0.97	59*N*A120V24**22
CNPH*6124A**	0.97	0.97	59*N*A120V24**22
CNPV*6024A**	0.97	0.97	59*N*A120V24**22
CNPV*6124A**	0.97	0.96	59*N*A120V24**22
CSPH*6012A**	0.97	0.97	59*N*A120V24**22
CAP**6024A**	0.97	0.97	59*P5A120E24**22
CAP**6025A**	0.97	0.97	59*P5A120E24**22
CNPH*6024A**	0.97	0.97	59*P5A120E24**22
CNPH*6124A**	0.97	0.97	59*P5A120E24**22
CNPV*6024A**	0.97	0.97	59*P5A120E24**22
CNPV*6124A**	0.97	0.96	59*P5A120E24**22
CSPH*6012A**	0.97	0.97	59*P5A120E24**22
CNPH*6024A**	0.97	1.05	OVLAAB060154
CNPH*6124A**	0.98	1.05	OVLAAB060154
CSPH*6012A**	0.98	1.04	OVLAAB060154

See notes on pg. 62

DETAILED COOLING CAPACITIES# CONTINUED

* Tested combination.

† Total and sensible capacities are net capacities. Blower motor heat has been subtracted.

‡ Sensible capacities shown are based on 80°F (27°C) entering air at the indoor coil. For sensible capacities at other than 80°F (27°C), deduct 835 Btuh (245 kW) per 1000 CFM (480 L/S) of indoor coil air for each degree below 80°F (27°C), or add 835 Btuh (245 kW) per 1000 CFM (480 L/S) of indoor coil air per degree above 80°F (27°C).

Detailed cooling capacities are based on indoor and outdoor unit at the same elevation per AHRI standard 210/240–2008. If additional tubing length and/or indoor unit is located above outdoor unit, a slight variation in capacity may occur.

** System kw is total of indoor and outdoor unit kilowatts.

†† At TVA rating indoor condition (75°F edb/63°F ewb). All other indoor air temperatures are at 80°F edb.

NOTE: When the required data falls between the published data, interpolation may be performed. Extrapolation is not an acceptable practice.

EWB — Entering Wet Bulb

CONDENSER ONLY RATINGS*

SST °F (°C)		CONDENSER ENTERING AIR TEMPERATURES °F (°C)							
		55 (12.78)	65 (18.33)	75 (23.89)	85 (29.44)	95 (35.0)	105 (40.56)	115 (46.11)	125 (51.67)
24ACB318A30									
30 (−1.11)	TCG	15.90	15.00	14.10	13.10	12.20	11.20	10.20	9.10
	SDT	67.80	77.30	86.80	96.30	105.90	115.50	125.10	134.80
	KW	0.80	0.92	1.06	1.20	1.36	1.54	1.73	1.92
35 (1.67)	TCG	17.50	16.50	15.50	14.50	13.50	12.50	11.40	10.20
	SDT	68.80	78.20	87.70	97.20	106.70	116.20	125.80	135.40
	KW	0.80	0.92	1.05	1.20	1.36	1.54	1.73	1.94
40 (4.44)	TCG	19.20	18.20	17.10	16.00	14.90	13.80	12.60	11.40
	SDT	69.80	79.20	88.70	98.10	107.50	117.00	126.50	136.00
	KW	0.79	0.91	1.05	1.20	1.36	1.54	1.74	1.95
45 (7.22)	TCG	21.00	19.90	18.80	17.60	16.40	15.20	14.00	12.60
	SDT	70.90	80.30	89.70	99.10	108.40	117.80	127.20	136.70
	KW	0.79	0.91	1.05	1.20	1.36	1.54	1.74	1.95
50 (10.0)	TCG	22.90	21.70	20.40	19.20	17.90	16.60	15.30	13.90
	SDT	72.00	81.40	90.70	100.10	109.30	118.70	128.00	137.30
	KW	0.79	0.91	1.04	1.19	1.36	1.54	1.74	1.95
55 (12.78)	TCG	24.80	23.50	22.10	20.80	19.40	18.00	16.70	15.20
	SDT	73.10	82.50	91.80	101.10	110.30	119.50	128.80	138.00
	KW	0.78	0.90	1.04	1.19	1.36	1.54	1.74	1.95
24ACB324A30									
30 (−1.11)	TCG	21.20	20.00	18.80	17.60	16.40	15.10	13.80	12.50
	SDT	71.90	81.20	90.60	100.10	109.50	119.00	128.60	138.20
	KW	1.04	1.19	1.37	1.56	1.77	2.01	2.26	2.53
35 (1.67)	TCG	23.30	22.10	20.80	19.50	18.20	16.80	15.40	13.90
	SDT	73.20	82.50	91.80	101.10	110.50	119.90	129.40	139.00
	KW	1.03	1.19	1.37	1.56	1.77	2.01	2.27	2.54
40 (4.44)	TCG	25.60	24.20	22.90	21.50	20.00	18.60	17.10	15.50
	SDT	74.60	83.80	93.00	102.30	111.50	120.90	130.30	139.70
	KW	1.03	1.19	1.37	1.56	1.78	2.01	2.27	2.55
45 (7.22)	TCG	28.00	26.50	25.00	23.50	22.00	20.40	18.80	17.10
	SDT	76.00	85.10	94.30	103.50	112.60	121.90	131.20	140.50
	KW	1.03	1.19	1.37	1.56	1.78	2.01	2.27	2.55
50 (10.0)	TCG	30.50	28.90	27.30	25.70	24.00	22.30	20.60	18.80
	SDT	77.50	86.60	95.60	104.70	113.80	122.90	132.10	141.20
	KW	1.03	1.19	1.37	1.56	1.77	2.01	2.27	2.55
55 (12.78)	TCG	33.00	31.30	29.60	27.80	26.10	24.30	22.40	20.40
	SDT	79.00	88.00	97.00	106.00	114.90	124.00	133.00	142.00
	KW	1.03	1.19	1.37	1.56	1.77	2.01	2.27	2.55
24ACB330A30									
30 (−1.11)	TCG	24.60	23.30	22.00	20.60	19.10	17.70	16.10	14.50
	SDT	72.10	81.50	91.00	100.60	110.20	120.00	129.90	139.90
	KW	1.33	1.50	1.69	1.91	2.14	2.40	2.67	2.97
35 (1.67)	TCG	27.10	25.70	24.30	22.80	21.30	19.70	18.00	16.20
	SDT	73.40	82.70	92.20	101.60	111.20	120.90	130.70	140.60
	KW	1.34	1.51	1.70	1.91	2.14	2.40	2.69	3.00
40 (4.44)	TCG	29.80	28.30	26.80	25.20	23.50	21.80	20.00	18.20
	SDT	74.70	84.00	93.30	102.70	112.20	121.80	131.50	141.30
	KW	1.34	1.51	1.70	1.91	2.15	2.41	2.70	3.01
45 (7.22)	TCG	32.70	31.10	29.40	27.70	26.00	24.10	22.20	20.20
	SDT	76.10	85.20	94.50	103.80	113.10	122.70	132.30	142.00
	KW	1.35	1.52	1.71	1.92	2.15	2.42	2.71	3.02
50 (10.0)	TCG	35.80	34.10	32.30	30.50	28.60	26.60	24.60	22.40
	SDT	77.50	86.60	95.70	104.90	114.20	123.60	133.10	142.60
	KW	1.35	1.52	1.71	1.92	2.16	2.42	2.71	3.03
55 (12.78)	TCG	39.10	37.20	35.30	33.40	31.30	29.30	27.10	24.80
	SDT	79.00	88.00	97.00	106.10	115.20	124.50	133.90	143.30
	KW	1.36	1.53	1.72	1.93	2.16	2.42	2.71	3.03
24ACB336A30									
30 (−1.11)	TCG	31.50	29.90	28.20	26.50	24.70	22.80	20.90	18.80
	SDT	72.10	81.10	90.20	99.30	108.50	117.70	127.00	136.30
	KW	1.62	1.82	2.05	2.31	2.59	2.90	3.23	3.58
35 (1.67)	TCG	34.70	32.90	31.10	29.20	27.30	25.30	23.20	21.00
	SDT	73.70	82.50	91.50	100.50	109.60	118.70	127.90	137.10
	KW	1.63	1.83	2.06	2.32	2.60	2.91	3.25	3.61
40 (4.44)	TCG	38.10	36.20	34.20	32.20	30.10	27.90	25.70	23.30
	SDT	75.30	84.00	92.80	101.80	110.70	119.80	128.90	138.00
	KW	1.64	1.84	2.07	2.33	2.62	2.93	3.27	3.63
45 (7.22)	TCG	41.70	39.60	37.50	35.30	33.10	30.70	28.30	25.70
	SDT	77.00	85.60	94.30	103.10	112.00	121.00	129.90	138.90
	KW	1.65	1.86	2.09	2.34	2.63	2.94	3.28	3.65
50 (10.0)	TCG	45.60	43.30	41.00	38.60	36.20	33.70	31.00	28.20
	SDT	78.90	87.30	95.90	104.60	113.30	122.20	131.00	139.90
	KW	1.67	1.87	2.10	2.36	2.64	2.96	3.30	3.67
55 (12.78)	TCG	49.60	47.10	44.60	42.00	39.40	36.70	33.80	30.80
	SDT	80.80	89.10	97.50	106.10	114.70	123.40	132.10	140.80
	KW	1.69	1.89	2.12	2.38	2.66	2.97	3.31	3.68

See notes on page 64

CONDENSER ONLY RATINGS* CONTINUED

SST °F (°C)		CONDENSER ENTERING AIR TEMPERATURES °F (°C)							
		55 (12.78)	65 (18.33)	75 (23.89)	85 (29.44)	95 (35.0)	105 (40.56)	115 (46.11)	125 (51.67)
24ACB342A30									
30 (−1.11)	TCG	38.00	36.00	33.90	31.90	29.70	27.60	25.30	22.90
	SDT	73.20	82.30	91.40	100.60	109.80	119.10	128.40	137.70
	KW	1.95	2.20	2.48	2.80	3.14	3.53	3.95	4.41
35 (1.67)	TCG	41.90	39.70	37.40	35.10	32.80	30.50	28.00	25.50
	SDT	74.80	83.70	92.80	101.90	111.00	120.20	129.40	138.60
	KW	1.97	2.22	2.50	2.81	3.16	3.54	3.97	4.43
40 (4.44)	TCG	46.00	43.60	41.10	38.70	36.20	33.60	30.90	28.10
	SDT	76.40	85.20	94.20	103.20	112.20	121.30	130.40	139.50
	KW	1.98	2.23	2.52	2.83	3.18	3.56	3.98	4.44
45 (7.22)	TCG	50.30	47.70	45.10	42.40	39.60	36.80	33.90	30.90
	SDT	78.10	86.90	95.70	104.60	113.50	122.50	131.40	140.40
	KW	2.01	2.26	2.54	2.85	3.19	3.58	4.00	4.45
50 (10.0)	TCG	54.90	52.10	49.20	46.20	43.20	40.20	37.00	33.60
	SDT	80.00	88.60	97.20	106.00	114.80	123.70	132.50	141.30
	KW	2.03	2.28	2.56	2.87	3.21	3.60	4.01	4.47
55 (12.78)	TCG	59.70	56.60	53.40	50.20	46.90	43.50	40.10	36.40
	SDT	81.90	90.30	98.90	107.50	116.20	124.90	133.60	142.20
	KW	2.06	2.30	2.58	2.89	3.23	3.62	4.03	4.48
24ACB348A30									
30 (−1.11)	TCG	41.60	39.30	37.10	34.80	32.40	30.00	27.40	24.80
	SDT	73.90	83.20	92.60	101.90	111.30	120.80	130.20	139.70
	KW	2.24	2.54	2.87	3.24	3.64	4.08	4.56	5.08
35 (1.67)	TCG	45.80	43.40	40.90	38.50	35.90	33.30	30.60	27.70
	SDT	75.40	84.70	93.90	103.20	112.50	121.90	131.30	140.70
	KW	2.25	2.55	2.88	3.25	3.66	4.10	4.59	5.11
40 (4.44)	TCG	50.30	47.70	45.10	42.40	39.60	36.80	33.90	30.90
	SDT	77.00	86.20	95.30	104.50	113.80	123.00	132.30	141.60
	KW	2.26	2.56	2.89	3.26	3.67	4.12	4.61	5.14
45 (7.22)	TCG	55.10	52.30	49.50	46.60	43.60	40.60	37.50	34.20
	SDT	78.60	87.70	96.80	105.90	115.00	124.20	133.40	142.60
	KW	2.27	2.57	2.90	3.27	3.68	4.13	4.62	5.15
50 (10.0)	TCG	60.20	57.20	54.20	51.10	47.90	44.60	41.20	37.70
	SDT	80.30	89.40	98.40	107.40	116.40	125.50	134.50	143.50
	KW	2.28	2.59	2.92	3.29	3.70	4.15	4.64	5.17
55 (12.78)	TCG	65.70	62.50	59.20	55.80	52.40	48.90	45.20	41.30
	SDT	82.10	91.10	100.00	108.90	117.80	126.80	135.70	144.50
	KW	2.30	2.60	2.94	3.30	3.71	4.16	4.65	5.18
24ACB360A30									
30 (−1.11)	TCG	53.30	50.40	47.40	44.50	41.50	38.40	35.20	31.90
	SDT	74.40	83.30	92.20	101.30	110.40	119.50	128.60	137.70
	KW	2.61	2.94	3.32	3.73	4.20	4.71	5.27	5.88
35 (1.67)	TCG	58.70	55.50	52.20	49.00	45.70	42.30	38.90	35.20
	SDT	76.10	84.90	93.70	102.70	111.70	120.70	129.70	138.70
	KW	2.65	2.98	3.36	3.77	4.24	4.75	5.31	5.91
40 (4.44)	TCG	64.30	60.80	57.30	53.80	50.20	46.50	42.60	38.60
	SDT	78.00	86.60	95.30	104.20	113.00	121.90	130.80	139.60
	KW	2.70	3.03	3.40	3.82	4.28	4.79	5.35	5.95
45 (7.22)	TCG	70.30	66.50	62.70	58.80	54.80	50.70	46.50	42.10
	SDT	79.90	88.40	97.00	105.70	114.50	123.20	132.00	140.60
	KW	2.75	3.08	3.46	3.87	4.33	4.84	5.39	5.99
50 (10.0)	TCG	76.70	72.50	68.20	64.00	59.60	55.20	50.60	45.60
	SDT	82.00	90.40	98.80	107.40	116.00	124.60	133.20	141.70
	KW	2.81	3.14	3.51	3.93	4.38	4.89	5.44	6.03
55 (12.78)	TCG	83.30	78.70	74.10	69.40	64.60	59.70	54.70	49.30
	SDT	84.20	92.40	100.70	109.10	117.50	126.00	134.40	142.70
	KW	2.87	3.20	3.57	3.98	4.44	4.94	5.48	6.07

* AHRI listing applies only to systems shown in Combination Ratings table.

KW – Outdoor Unit Kilowatts Only.

SDT – Saturated Temperature Leaving Compressor (°F)

SST – Saturated Temperature Entering Compressor (°F/°C)

TCG – Gross Cooling Capacity (1000 Btuh)

GUIDE SPECIFICATIONS
GENERAL

System Description

Outdoor-mounted, air-cooled, split-system air conditioner unit suitable for ground or rooftop installation. Unit consists of a hermetic compressor, an air-cooled coil, propeller-type condenser fan, and a control box. Unit will discharge supply air upward as shown on contract drawings. Unit will be used in a refrigeration circuit to match up to a packaged fan coil or coil unit.

Quality Assurance

— Unit will be rated in accordance with the latest edition of AHRI Standard 210.

— Unit will be certified for capacity and efficiency, and listed in the latest AHRI directory.

— Unit construction will comply with latest edition of ANSI/ ASHRAE and with NEC.

— Unit will be constructed in accordance with UL standards and will carry the UL label of approval. Unit will have c-UL-us approval.

— Unit cabinet will be capable of withstanding Federal Test Method Standard No. 141 (Method 6061) 500-hr salt spray test.

— Air-cooled condenser coils will be leak tested at 150 psig and pressure tested at 450 psig.

— Unit constructed in ISO9001 approved facility.

Delivery, Storage, and Handling

— Unit will be shipped as single package only and is stored and handled per unit manufacturer's recommendations.

Warranty (for inclusion by specifying engineer)

— U.S. and Canada only.

PRODUCTS

Equipment

Factory assembled, single piece, air-cooled air conditioner unit. Contained within the unit enclosure is all factory wiring, piping, controls, compressor, refrigerant charge Puron® (R-410A), and special features required prior to field start-up.

Unit Cabinet

— Unit cabinet will be constructed of galvanized steel, bonderized, and coated with a powder coat paint.

Fans

— Condenser fan will be direct-drive propeller type, discharging air upward.

— Condenser fan motors will be totally enclosed, 1-phase type with class B insulation and permanently lubricated bearings. Shafts will be corrosion resistant.

— Fan blades will be statically and dynamically balanced.

— Condenser fan openings will be equipped with coated steel wire safety guards.

Compressor

— Compressor will be hermetically sealed.

— Compressor will be mounted on rubber vibration isolators.

Condenser Coil

— Condenser coil will be air cooled.

— Coil will be constructed of aluminum fins mechanically bonded to copper tubes which are then cleaned, dehydrated, and sealed.

Refrigeration Components

— Refrigeration circuit components will include liquid-line shutoff valve with sweat connections, vapor-line shutoff valve with sweat connections, system charge of Puron® (R-410A) refrigerant, and compressor oil.

— Unit will be equipped with high-pressure switch, low pressure switch and filter drier for Puron refrigerant.

Operating Characteristics

— The capacity of the unit will meet or exceed _____ Btuh at a suction temperature of _____ °F/°C. The power consumption at full load will not exceed _____ kW.

— Combination of the unit and the evaporator or fan coil unit will have a total net cooling capacity of _____ Btuh or greater at conditions of _____ CFM entering air temperature at the evaporator at _____ °F/°C wet bulb and _____ °F/°C dry bulb, and air entering the unit at _____ °F/°C.

— The system will have a SEER of _____ Btuh/watt or greater at DOE conditions.

Electrical Requirements

— Nominal unit electrical characteristics will be _____ v, single phase, 60 hz. The unit will be capable of satisfactory operation within voltage limits of _____ v to _____ v.

— Unit electrical power will be single point connection.

— Control circuit will be 24v.

Special Features

— Refer to section of this literature identifying accessories and descriptions for specific features and available enhancements.

Copyright 2011 Carrier Corp. • 7310 W. Morris St. • Indianapolis, IN 46231 Printed in U.S.A. Edition Date: 08/11

Catalog No. 24ACB3–5PD

Manufacturer reserves the right to change, at any time, specifications and designs without notice and without obligations.

Replaces: 24ACB3–4PD