# 25HCB3
# Performance™ 13 Heat Pump with Puron® Refrigerant 1–1/2 To 5 Nominal Tons

Carrier
turn to the experts™

# Product Data

Puron™ the environmentally sound refrigerant

Performance™ SERIES

Carrier's heat pumps with Puron® refrigerant provide a collection of features unmatched by any other family of equipment. The 25HCB3 has been designed utilizing Carrier's Puron refrigerant. The environmentally sound refrigerant allows consumers to make a responsible decision in the protection of the earth's ozone layer.

This product has been designed and manufactured to meet Energy Star® criteria for energy efficiency when matched with appropriate coil components. Refer to the combination ratings in the Product Data for system combinations that meet Energy Star® guidelines.

**NOTE: Ratings contained in this document are subject to change at any time. Always refer to the AHRI directory (www.ahridirectory.org) for the most up-to-date ratings information.**

## INDUSTRY LEADING FEATURES / BENEFITS

### Efficiency

- 13 SEER/ 10.1 - 10.8 EER/ 7.7 - 8.3 HSPF (Nominal)
- Microtube Technology™ refrigeration system
- Indoor air quality accessories available

### Sound

- Sound level as low as 70 dBA

### Comfort

- System supports Thermidistat™ or standard thermostat controls

### Reliability

- Puron® refrigerant - environmentally sound, won't deplete the ozone layer and low lifetime service cost.
- Front-seating service valves
- Scroll compressor
- Internal pressure relief valve
- Internal thermal overload
- High pressure switch
- Loss of charge switch
- Filter drier
- Balanced refrigeration system for maximum reliability

### Durability

WeatherArmor™ protection package:

- Solid, durable sheet metal construction
- Steel louver coil guard
- Ceramic coated cabinet screws
- Baked-on, complete coverage, powder paint

### Applications

- Long-line - up to 250 feet (76.20 m) total equivalent length, up to 200 feet (60.96 m) condenser above evaporator, or up to 80 ft. (24.38 m) evaporator above condenser (See Longline Guide for more information.)
- Low ambient (down to -20°F/-28.9°C) with accessory kit

# MODEL NUMBER NOMENCLATURE

| 1 | 2 | 3 | 4 | 5 | 6 | 7 | 8 | 9 | 10 | 11 | 12 | 13 |
|---|---|---|---|---|---|---|---|---|---|---|---|---|
| N | N | A | A | A/N | N | N | N | A/N | A/N | A/N | N | N |
| **2** | **5** | **H** | **C** | **B** | **3** | **3** | **6** | **A** | **0** | **0** | **3** | 1 |
| Product Series | | Product Family | Tier | Major Series | SEER | Cooling Capacity | | Variations | Open | Open | Voltage | Minor Series |
| 25 = HP | | H = RES HP | C=Perform-ance | B = Puron | 3=13 SEER | | | A = Standard | 0=Not Defined | 0=Not Defined | 3=208/230–1<br>5=208/230–3<br>6=460–3 | 0, 1, 2... |

Puron™
the environmentally sound refrigerant

AHRI CERTIFIED™ www.ahridirectory.org

Use of the AHRI Certified TM Mark indicates a manufacturer's participation in the program For verification of certification for individual products, go to www.ahridirectory.org.

Certified System ™

ISO 9001
QMI-SAI Global

c UL US

ENERGY STAR

This product has been designed and manufactured to meet Energy Star® criteria for energy efficiency when matched with appropriate coil components. However, proper refrigerant charge and proper air flow are critical to achieve rated capacity and efficiency. Installation of this product should follow all manufacturing refrigerant charging and air flow instructions. **Failure to confirm proper charge and air flow may reduce energy efficiency and shorten equipment life.**

# STANDARD FEATURES

| **Feature** | **18** | **24** | **30** | **36** | **42** | **48** | **60** |
|---|---|---|---|---|---|---|---|
| Puron Refrigerant | X | X | X | X | X | X | X |
| 13 SEER | X | X | X | X | X | X | X |
| Scroll Compressor | X | X | X | X | X | X | X |
| Louvered Coil Guard | X | X | X | X | X | X | X |
| Field Installed Filter Drier | X | X | X | X | X | X | X |
| Front Seating Service Valves | X | X | X | X | X | X | X |
| Internal Pressure Relief Valve | X | X | X | X | X | X | X |
| Internal Thermal Overload | X | X | X | X | X | X | X |
| Long Line capability | X | X | X | X | X | X | X |
| Low Ambient capability with Kit | X | X | X | X | X | X | X |
| Suction Line Accumulator | X | X | X | X | X | X | X |
| High Pressure Switch | X | X | X | X | X | X | X |
| Loss of Charge Switch | X | X | X | X | X | X | X |

X = Standard

# PHYSICAL DATA

| UNIT SIZE–SERIES, VOLTAGE | 18–30 | 24–30 | 30–30 | 36–30 | 42–30 | 48–30 | 60–31 |
|---|---|---|---|---|---|---|---|
| Operating Weight lb (kg) | 174 (78.9) | 183 (83.0) | 206 (93.4) | 203 (92.1) | 263 (119.32) | 283 (128.4) | 299 (135.6) |
| Shipping Weigh lb (kg) | 201 (91.2) | 210 (95.3) | 235 (106.6) | 241 (109.3) | 295 (133.8) | 313 (142.0) | 331 (150.1) |
| Compressor Type | Scroll | | | | | | |
| Refrigerant | Puron® (R–410A) | | | | | | |
| Control | TXV (Puron Hard Shutoff) | | | | | | |
| Charge lb (kg) | 6.4 (2.9) | 5.5 (2.5) | 7.5 (3.4) | 7.2 (3.2) | 8.1 (3.7) | 11.6 (5.3) | 12.4 (5.6) |
| Outdoor Heating Piston # | 42 | 46 | 55 | 57 | 61 | 61 | 76 |
| Cond Fan | Propeller Type, Direct Drive | | | | | | |
| Air Discharge | Vertical | | | | | | |
| Air Qty (CFM) | 2614 | 2614 | 2614 | 3472 | 3810 | 4046 | 4046 |
| Motor HP | 1/10 | 1/10 | 1/10 | 1/8 | 1/5 | 1/4 | 1/4 |
| Motor RPM | 800 | 800 | 800 | 800 | 800 | 800 | 800 |
| Cond Coil | | | | | | | |
| Face Area (Sq ft) | 15.09 | 15.09 | 21.56 | 20.12 | 25.15 | 20.12 | 22.63 |
| Fins per In. | 20 | 20 | 20 | 20 | 20 | 20 | 20 |
| Rows | 1 | 1 | 1 | 1 | 1 | 2 | 2 |
| Circuits | 5 | 5 | 5 | 6 | 6 | 8 | 8 |
| Valve Connect (In.) ID | | | | | | | |
| Vapor | 5/8 | 5/8 | 3/4 | 3/4 | 7/8 | 7/8 | 7/8 |
| Liquid | 3/8 | | | | | | |
| Refrigerant Tubes (In.) OD | | | | | | | |
| Rated Vapor* | 5/8 | 5/8 | 3/4 | 3/4 | 7/8 | 7/8 | 1–1/8 |
| Liquid | 3/8 | | | | | | |

*Units are rated with 25 ft (7.6 m) of lineset length. See *Vapor Line Sizing and Cooling Capacity Loss* table when using other sizes and lengths of lineset.

**Note**: See unit Installation Instruction for proper installation.

25HCB3

# VAPOR LINE SIZING AND COOLING CAPACITY LOSS

LONG LINE APPLICATION: An application is considered ”Long line” when the total equivalent tubing length exceeds 80 ft. (24.38 m) or when there is more than 20 ft. (6.09 m) vertical separation between indoor and outdoor units. These applications require additional accessories and system modifications for reliable system operation. The maximum allowable total equivalent length is up to 250 ft. (76.2 m). The maximum vertical separation is 200 ft. (60.96 m) when outdoor unit is above indoor unit, and up to 80 ft. (24.38 m) when the outdoor unit is below the indoor unit. Refer to Accessory Usage Guideline below for required accessories. See Longline Application Guideline for required piping and system modifications. Also, refer to the table below for vapor tube diameters based on the total length to minimize the cooling capacity loss.

| Unit Nominal Size (Btuh) | Maximum Liquid Line Diameters (In.) OD | Vapor Line Diameters (In.) OD | Cooling Capacity Loss (%) Total Equivalent Line Length ft. (m) | | | | | | | | |
|---|---|---|---|---|---|---|---|---|---|---|---|
| | | | Standard Application | | Long Line Application Requires Accessories | | | | | | |
| | | | 26–50 (7.9–15.2) | 51–80 (15.5–24.4) | 81–100 (24.7–30.5) | 101–125 (30.8–38.1) | 126–150 (38.4–45.7) | 151–175 (46.0–50.3) | 176–200 (53.6–60.0) | 201–225 (61.3–68.6) | 226–250 (68.9–76.2) |
| 18,000 1–Stage Puron HP | 3/8 | 1/2 | 1 | 2 | 3 | 4 | 6 | 7 | 8 | 9 | 10 |
| | | 5/8 | 0 | 0 | 1 | 1 | 1 | 2 | 2 | 3 | 3 |
| 24,000 1–Stage Puron HP | | 5/8 | 0 | 1 | 1 | 2 | 3 | 3 | 4 | 4 | 5 |
| | | 3/4 | 0 | 0 | 0 | 0 | 1 | 1 | 1 | 1 | 1 |
| 30,000 1–Stage Puron HP | | 5/8 | 1 | 2 | 3 | 3 | 4 | 5 | 6 | 7 | 8 |
| | | 3/4 | 0 | 0 | 1 | 1 | 1 | 2 | 2 | 2 | 3 |
| | | 7/8 | 0 | 0 | 0 | 0 | 1 | 1 | 1 | 1 | 1 |
| 36,000 1–Stage Puron HP | | 5/8 | 1 | 2 | 4 | 5 | 6 | 7 | 9 | 10 | 11 |
| | | 3/4 | 0 | 0 | 1 | 1 | 2 | 2 | 3 | 3 | 4 |
| | | 7/8 | 0 | 0 | 0 | 0 | 1 | 1 | 1 | 1 | 2 |
| 42,000 1–Stage Puron HP | | 3/4 | 0 | 1 | 2 | 2 | 3 | 4 | 4 | 5 | 6 |
| | | 7/8 | 0 | 0 | 1 | 1 | 1 | 2 | 2 | 2 | 3 |
| 48,000 1–Stage Puron HP | | 3/4 | 0 | 1 | 2 | 3 | 4 | 5 | 5 | 6 | 7 |
| | | 7/8 | 0 | 0 | 1 | 1 | 2 | 2 | 2 | 3 | 3 |
| 60,000 1–Stage Puron HP | | 3/4 | 1 | 2 | 4 | 5 | 6 | 7 | 9 | 10 | 11 |
| | | 7/8 | 0 | 1 | 2 | 2 | 3 | 4 | 4 | 5 | 5 |
| | | 1–1/8 | 0 | 0 | 0 | 1 | 1 | 1 | 1 | 1 | 1 |

Applications in this area are long line. Accessories are required as shown recommended on Long Line Application Guidelines

Applications in this area may have height restrictions that limit allowable total equivalent length, when outdoor unit is below indoor unit See Long Line Application Guidelines

# ACCESSORIES

| ORDER NUMBER | DESCRIPTION | UNIT SIZES–SERIES, VOLTAGE | | | | | | |
|---|---|---|---|---|---|---|---|---|
| | | 18–30 | 24–30 | 30–30 | 36–30 | 42–30 | 48–30 | 60–31 |
| KAACH1701AAA | CRANKCASE HTR | X | X | X | X | | | |
| KAACH1601AAA | CRANKCASE HTR | | | | | X | | |
| STANADARD | CRANKCASE HTR | | | | | | S | S |
| KAAFT0101AAA | FREEZE THERMOSTAT | X | X | X | X | X | X | X |
| KSAHS1701AAA | HARD START (CAP/RELAY) | X | X | X | X | X | X | X |
| KHAIR0101AAA | ISOLATION RELAY | X | X | X | X | X | X | X |
| KSALA0301410 | LOW AMBIENT PSW | X | X | X | X | X | X | X |
| HC34GE242 | MOTOR FAN BALL BEARING | X | X | X | | | | |
| HC36GE232 | MOTOR FAN BALL BEARING | | | | X | | | |
| HC38GE228 | MOTOR FAN BALL BEARING | | | | | X | | |
| HC40GE228 | MOTOR FAN BALL BEARING | | | | | | X | X |
| KSALA0601AAA | MOTORMASTER 230V | X | X | X | X | X | X | X |
| KHAOT0201SEC | OUTDOOR THERMOSTAT | X | X | X | X | X | X | X |
| KHAOT0301FST | OUTDOOR THERMOSTAT | X | X | X | X | X | X | X |
| KHALS0401LLS | SOLENOID VALVE | X | X | X | X | X | X | X |
| KHASS0606MPK* | SNOW STAND | X | X | X | X | X | X | X |
| KAACS0201PTC | START ASSIST PTC | X | X | X | X | X | X | X |
| KSASF0101AAA | SUPPORT FEET | X | X | X | X | X | X | X |
| KAATD0101TDR | TIME DELAY | X | X | X | X | X | X | X |
| KSATX0201PUR | TXV PURON HSO | X | X | X | | | | |
| KSATX0301PUR | TXV PURON HSO | | | | X | X | | |
| KSATX0401PUR | TXV PURON HSO | | | | | | X | |
| KSATX0501PUR | TXV PURON HSO | | | | | | | X |

x = Accessory S = Standard

* Sold in 6 pk. quantities Obtain through RCD.

# ACCESSORY THERMOSTATS

| PART NUMBER | PROGRAM | GAS | ELECTRIC | HEAT PUMP | HYBRID HEAT | HEAT | COOL |
|---|---|---|---|---|---|---|---|
| Performance | | | | | | | |
| TP–PRH01–A | 7–Day | √ | √ | √ | √ | 3 | 2 |
| TP–PHP01 | 7–Day | | √ | √ | | 3 | 2 |
| TP–NRH01–A | NP | √ | √ | √ | √ | 3 | 2 |
| TP–NHP01 | NP | | √ | √ | | 3 | 2 |

| THERMOSTAT ACCESSORIES | | |
|---|---|---|
| PART NUMBER | BRIEF DESCRIPTION | THERMOSTATS USED WITH |
| SYSTXCCRRS01 | Indoor Remote Room Temperature Sensor | All TP– thermostats |
| TP–EXP01–A | ExP Computer Programming Accessory | TP–P thermostats |
| TSTATXXCNV10* | Thermostat Conversion Kit (4 to 5 wire) – 10 pack | All Carrier branded thermostats |
| TX–LBP01 | Large Decorative Backplate | TP–Pxx, TP–Nxx, TC–Pxx |
| TSTATXXSEN01–B† | Outdoor Air Temperature Sensor | All TP– thermostats |

* Thermostat conversion kit is a 24–vac accessory that can turn a 4–wire thermostat application into a 5–wire application. This kit can also be used to replace a broken thermostat wire, or add an extra wire when needed.

† Outdoor temperature sensor is an accessory for all Carrier electronic thermostats, except the non–programmable air conditioner version and builder;s thermostats. It allows the temperature at a remote location (outdoors) to be displayed on the thermostat. The outdoor air temperature sensor must be used with the HybridHeat™ (dual fuel) thermostat. The outdoor air temperature sensor is included with the Thermidistat Control and HybridHeat™ (dual fuel) thermostat.

# ACCESSORY USAGE GUIDELINE

| Accessory | REQUIRED FOR LOW–AMBIENT COOLING APPLICATIONS (Below 55°F / 12.8°C) | REQUIRED FOR LONG LINE APPLICATIONS* (Over 80 ft. / 24.38 m) | REQUIRED FOR SEA COAST APPLICATIONS (Within 2 miles / 3.22 km) |
|---|---|---|---|
| **Accumulator** | Standard | Standard | Standard |
| **Ball Bearing Fan Motor** | Yes† | No | No |
| **Compressor Start Assist Capacitor and Relay** | Yes | Yes | No |
| **Crankcase Heater** | Yes | Yes | No |
| **Evaporator Freeze Thermostat** | Yes | No | No |
| **Hard Shutoff TXV** | Yes | Yes | Yes |
| **Isolation Relay** | Yes | No | No |
| **Liquid Line Solenoid Valve** | No | See Long–Line Application Guideline | No |
| **Motor Master® Control or Low Ambient Switch** | Yes | No | No |
| **Support Feet** | Recommended | No | Recommended |

* For tubing line sets between 80 and 200 ft. (24.38 and 60.96 m) and/or 20 ft. (6.09 m) vertical differential, refer to Residential Split–System Longline Application Guideline.

† Additional requirement for Low–Ambient Controller (full modulation feature) MotorMaster® Control.

25HCB3

## Accessory Description and Usage (Listed Alphabetically)

**1. Ball-Bearing Fan Motor**

A fan motor with ball bearings which permits speed reduction while maintaining bearing lubrication.

Usage Guideline:

Required on all units when using MotorMaster®

**2. Compressor Start Assist - Capacitor and Relay**

Start capacitor and relay gives a ”hard” boost to compressor motor at each start up.

Usage Guideline:

Required for reciprocating compressors in the following applications:

Long line

Low ambient cooling

Hard shut off expansion valve on indoor coil

Liquid line solenoid on indoor coil

Required for single-phase scroll compressors in the following applications:

Long line

Low ambient cooling

Suggested for all compressors in areas with a history of low voltage problems.

**3. Compressor Start Assist — PTC Type**

Solid state electrical device which gives a ”soft” boost to the compressor at each start-up.

Usage Guideline:

Suggested in installations with marginal power supply.

**4. Crankcase Heater**

An electric resistance heater which mounts to the base of the compressor to keep the lubricant warm during off cycles. Improves compressor lubrication on restart and minimizes the chance of liquid slugging.

Usage Guideline:

Required in low ambient cooling applications.

Required in long line applications.

Suggested in all commercial applications.

**5. Evaporator Freeze Thermostat**

An SPST temperature-actuated switch that stops unit operation when evaporator reaches freeze-up conditions.

Usage Guideline:

Required when low ambient kit has been added.

**6. Isolation Relay**

An SPDT relay which switches the low-ambient controller out of the outdoor fan motor circuit when the heat pump switches to heating mode.

Usage Guideline:

Required in all heat pumps where low ambient kit has been added.

**7. Liquid-Line Solenoid Valve (LLS)**

An electrically operated shutoff valve which stops and starts refrigerant liquid flow in response to compressor operation. It is to be installed at the outdoor unit to control refrigerant off cycle migration in the heating mode.

Usage Guideline:

An LLS is required in all long line heat pump applications to control refrigerant off cycle migration in the heating mode. See Long Line Guideline.

**8. Low-Ambient Pressure Switch Kit**

A long life pressure switch which is mounted to outdoor unit service valve. It is designed to cycle the outdoor fan motor in order to maintain head pressure within normal operating limits. The control will maintain working head pressure at low-ambient temperatures down to 0°F (-17.8°C)when properly installed.

Usage Guideline:

A Low-Ambient Pressure Switch or MotorMaster® Low-Ambient Controller must be used when cooling operation is used at outdoor temperatures below 55°F (12.8°C).

**9. MotorMaster® Low-Ambient Controller**

A fan-speed control device activated by a temperature sensor, designed to control condenser fan motor speed in response to the saturated, condensing temperature during operation in cooling mode only. For outdoor temperatures down to -20°F (-28.9°C), it maintains condensing temperature at 100°F ±10°F (37.8°C ± 6.5°C).

Usage Guideline:

A MotorMaster® Low Ambient Controller or Low-Ambient Pressure Switch must be used when cooling operation is used at outdoor temperatures below 55°F (12.8°C).

Suggested for all commercial applications.

**10. Outdoor Air Temperature Sensor**

Designed for use with Carrier Thermostats listed in this publication. This device enables the thermostat to display the outdoor temperature. This device also is required to enable special thermostat features such as auxiliary heat lock out.

Usage Guideline:

Suggested for all Carrier thermostats listed in this publication.

**11. Outdoor Thermostat**

An SPDT temperature-actuated switch which turns on supplemental electric heaters when outdoor air temperature drops below a user-selected set point.

Usage Guideline:

Electric supplemental heat applications in non-variable speed indoor units when electric heat staging is desired.

**12. Secondary Outdoor Thermostat**

An SPDT temperature-actuated switch which turns on third-stage of supplemental electric heaters when outdoor air temperature drops below the second-stage set point.

Usage Guideline:

Outdoor thermostat applications where electric heater is capable of three-stage operation.

**13. Snow Stand**

Coated wire rack which supports unit 18 in. (457.2 mm) above mounting pad to allow for drainage from unit base.

Usage Guideline:

Suggested in the following applications:

Heat pump installations in heavy snowfall areas.

Heat pump installations in snow drift locations.

Heat pump installations in areas of prolonged subfreezing temperatures.

All commercial installations.

**14. Sound Hood**

Wraparound sound reducing cover for the compressor. Reduces the sound level by about 2 dBA.

Usage Guideline:

Suggested when unit is installed closer than 15 ft. (4.577 m) to quiet areas, bedrooms, etc.

Suggested when unit is installed between two houses less than 10 ft. (3.05 m) apart.

**15. Thermostatic Expansion Valve (TXV) Bi-Flow**

A modulating flow-control valve which meters refrigerant liquid flow rate into the evaporator in response to the superheat of the refrigerant gas leaving the evaporator.

Usage Guideline:

Accessory required to meet AHRI rating and system reliability, where indoor not equipped.

Required in all heat pump applications designed with Puron refrigerant.

**16. Time-Delay Relay**

An SPST delay relay which briefly continues operation of indoor blower motor to provide additional cooling after the compressor cycles off.

**Note:** Most indoor unit controls include this feature. For those that do not, use the guideline below.

Usage Guideline:

Accessory required to meet AHRI rating, where indoor not equipped.

# ELECTRICAL DATA

| UNIT SIZE–SERIES, VOLTAGE | V/PH | OPER VOLTS* | | COMPR | | FAN | MCA | MIN WIRE SIZE† | MIN WIRE SIZE† | MAX LENGTH ft (m)‡ | MAX LENGTH ft (m)‡ | MAX FUSE** or CKT BRK AMPS |
|---|---|---|---|---|---|---|---|---|---|---|---|---|
| | | MAX | MIN | LRA | RLA | FLA | | 60° C | 75° C | 60° C | 75° C | |
| **18–30** | 208/230/1 | 253 | 197 | 48.0 | 9.0 | 0.7 | 11.9 | 14 | 14 | 66 (20.1) | 62 (18.9) | 20 |
| **24–30** | | | | 58.3 | 12.8 | 0.7 | 16.7 | 14 | 14 | 47 (14.3) | 45 (13.7) | 25 |
| **30–30** | | | | 77.0 | 16.0 | 0.8 | 20.8 | 12 | 12 | 60 (18.3) | 57 (17.4) | 30 |
| **36–30** | | | | 79.0 | 17.1 | 0.9 | 22.3 | 12 | 12 | 56 (17.1) | 53 (16.2) | 35 |
| **42–30** | | | | 109.0 | 19.9 | 1.2 | 26.0 | 10 | 10 | 77 (23.5) | 73 (22.3) | 40 |
| **48–30** | | | | 117.0 | 27.3 | 1.2 | 35.4 | 8 | 8 | 88 (26.8) | 84 (25.6) | 50 |
| **60–31** | | | | 134.0 | 26.3 | 1.2 | 34.1 | 8 | 8 | 91 (27.7) | 87 (26.5) | 50 |

* Permissible limits of the voltage range at which the unit will operate satisfactorily

† If wire is applied at ambient greater than 30°C, consult table 310–16 of the NEC (ANSI/NFPA 70). The ampacity of non–metallic–sheathed cable (NM), trade name ROMEX, shall be that of 60°C conditions, per the NEC (ANSI/NFPA 70) Article 336–26. If other than uncoated (no–plated), 60 or 75°C insulation, copper wire (solid wire for 10 AWG or smaller, stranded wire for larger than 10 AWG) is used, consult applicable tables of the NEC (ANSI/NFPA 70).

‡ Length shown is as measured 1 way along wire path between unit and service panel for voltage drop not to exceed 2%.

** Time–Delay fuse.

**FLA** – Full Load Amps

**LRA** – Locked Rotor Amps

**MCA –** Minimum Circuit Amps

**RLA** – Rated Load Amps

**NOTE**: Control circuit is 24–V on all units and requires external power source. Copper wire must be used from service disconnect to unit.
All motors/compressors contain internal overload protection.
Complies with 2007 requirements of ASHRAE Standards 90.1



# A-WEIGHTED SOUND POWER

| UNIT SIZE–SERIES, VOLTAGE | STANDARD RATING (dBA) | TYPICAL OCTAVE BAND SPECTRUM (dBA, without tone adjustment) | | | | | | |
|---|---|---|---|---|---|---|---|---|
| | | 125 | 250 | 500 | 1000 | 2000 | 4000 | 8000 |
| **18–30** | 73 | 58.5 | 62.5 | 67.0 | 67.5 | 65.5 | 62.5 | 53.5 |
| **24–30** | 72 | 54.5 | 63.0 | 66.5 | 66.0 | 64.0 | 60.5 | 51.5 |
| **30–30** | 73 | 57.0 | 63.5 | 68.0 | 69.0 | 65.0 | 61.0 | 52.5 |
| **36–30** | 70 | 54.5 | 62.0 | 63.5 | 64.5 | 63.0 | 60.0 | 51.5 |
| **42–30** | 73 | 55.0 | 60.0 | 64.0 | 67.5 | 61.5 | 60.0 | 55.0 |
| **42–30** | 73 | 55.0 | 60.0 | 64.0 | 67.5 | 61.5 | 60.0 | 55.0 |
| **48–30** | 74 | 57.5 | 64.5 | 67.5 | 69.5 | 66.5 | 61.0 | 53.0 |
| **60–31** | 74 | 53.5 | 63.0 | 67.5 | 70.0 | 63.5 | 60.0 | 55.5 |

**NOTE**: Tested in accordance with AHRI Standard 270–2008 (not listed in AHRI).

# CHARGING SUBCOOLING (TXV-TYPE EXPANSION DEVICE)

| UNIT SIZE–SERIES, VOLTAGE | REQUIRED SUBCOOLING °F (°C) |
|---|---|
| **18–30** | 10 (5.6) |
| **24–30** | 12 (6.7) |
| **30–30** | 12 (6.7) |
| **36–30** | 10 (5.6) |
| **42–30** | 11 (6.1) |
| **48–30** | 11 (6.1) |
| **60–31** | 12 (6.7) |

# DIMENSIONS - ENGLISH

| UNIT | SERIES | ELECTRICAL CHARACTERISTICS | | | | A | B | C | D | E | F | G | K | L | M | N | P | OPERATING WEIGHT (lbs) | SHIPPING WEIGHT (lbs) | SHIPPING DIMENSIONS (L x W x H) |
|---|---|---|---|---|---|---|---|---|---|---|---|---|---|---|---|---|---|---|---|---|
| 25HCB318 | 0 | X | O | O | O | 31 3/16" | 28 15/16" | 3 3/4" | 5/8" | 6 9/16" | 24 11/16" | 9 1/8" | 2 13/16" | 1/2" | 14" | 14 3/4" | 14" | 174 | 201 | 32 3/8" X 35 1/2" X 32 9/16" |
| 25HCB324 | 0 | X | O | O | O | 31 3/16" | 28 15/16" | 3 3/4" | 5/8" | 6 9/16" | 24 11/16" | 9 1/8" | 2 13/16" | 1/2" | 15 5/8" | 16 3/4" | 14 1/2" | 183 | 210 | 32 3/8" X 35 1/2" X 32 9/16" |
| 25HCB330 | 0 | X | O | O | O | 31 3/16" | 39 1/8" | 3 3/4" | 3/4" | 6 9/16" | 24 11/16" | 9 1/8" | 2 13/16" | 1/2" | 16 1/2" | 15 1/2" | 17" | 206 | 235 | 32 3/8" X 35 1/2" X 42 3/4" |
| 25HCB336 | 0 | X | O | O | O | 35" | 32 5/16" | 3 3/4" | 3/4" | 6 9/16" | 28 7/16" | 9 1/8" | 2 13/16" | 1/2" | 16" | 16 1/2" | 13 1/2" | 203 | 241 | 36 1/8" X 39 5/16" X 35 15/16" |
| 25HCB342 | 0 | X | O | O | O | 35" | 39 1/8" | 3 7/8" | 7/8" | 6 9/16" | 28 7/16" | 9 1/8" | 2 15/16" | 5/8" | 17 1/4" | 19 1/8" | 15 3/4" | 263 | 295 | 36 1/8" X 39 5/16" X 42 3/4" |
| 25HCB348 | 0 | X | O | O | O | 35" | 32 5/16" | 3 7/8" | 7/8" | 6 9/16" | 28 7/16" | 9 1/8" | 2 15/16" | 5/8" | 19" | 19" | 14 1/2" | 283 | 313 | 36 1/8" X 39 5/16" X 35 15/16" |
| 25HCB360 | 1 | X | O | O | O | 35" | 39 1/8" | 3 7/8" | 7/8" | 6 9/16" | 28 7/16" | 9 1/8" | 2 15/16" | 5/8" | 19" | 19" | 19" | 299 | 331 | 36 1/8" X 39 5/16" X 42 3/4" |

| 208-230-1-60 | 230-1-60 | 208/230-3-60 | 460-3-60 |
|---|---|---|---|

X = YES
O = NO

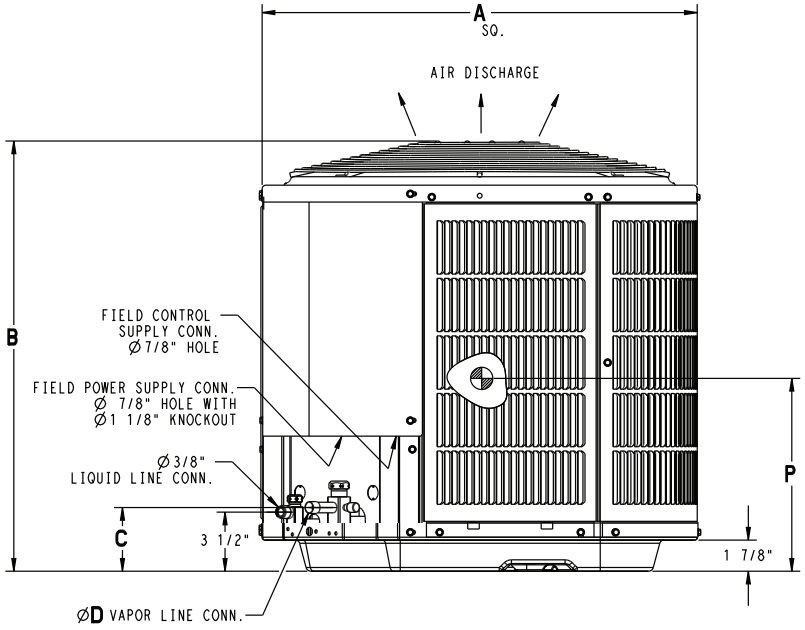


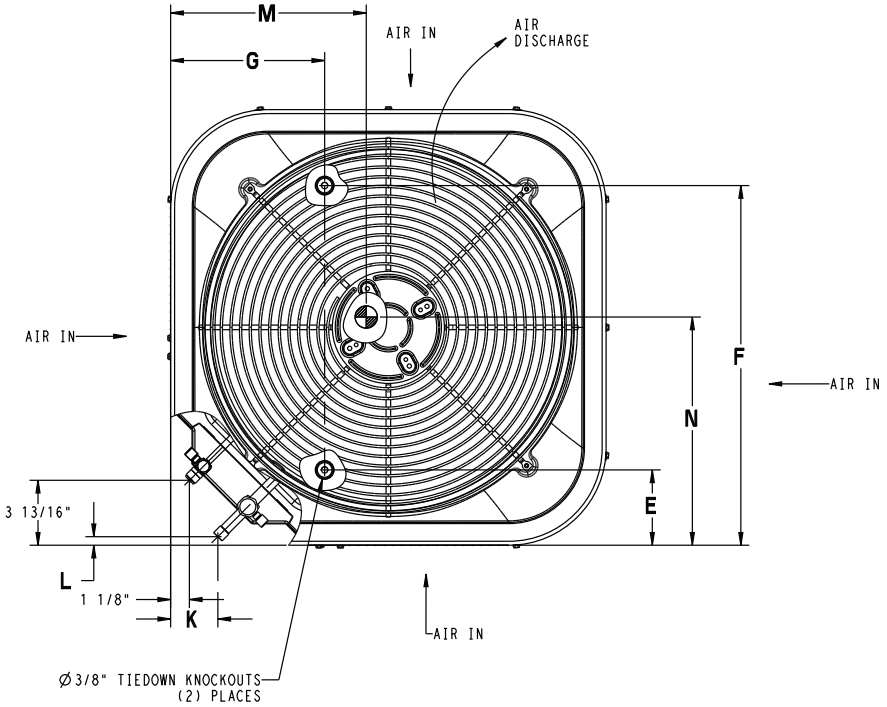


| UNIT SIZE | MINIMUM MOUNTING PAD DIMENSIONS |
|---|---|
| - | 26" X 26" |
| 18,24,30 | 31 1/2" X 31 1/2" |
| 36,42,48,60 | 35" X 35" |

# DIMENSIONS - SI

| UNIT | SERIES | ELECTRICAL CHARACTERISTICS | | | | A | B | C | D | E | F | G | K | L | M | N | P | OPERATING WEIGHT (Kgs) | SHIPPING WEIGHT (Kgs) | SHIPPING DIMENSIONS (L x W x H) |
|---|---|---|---|---|---|---|---|---|---|---|---|---|---|---|---|---|---|---|---|---|
| 25HCB318 | 0 | X | O | O | O | 792.2 | 735.0 | 95.2 | 15.9 | 166.7 | 627.1 | 231.8 | 71.4 | 12.7 | 355.6 | 374.6 | 355.6 | 78.9 | 91.2 | 822.3 X 901.7 X 827.1 |
| 25HCB324 | 0 | X | O | O | O | 792.2 | 735.0 | 95.2 | 15.9 | 166.7 | 627.1 | 231.8 | 71.4 | 12.7 | 396.9 | 425.4 | 368.3 | 83.0 | 95.2 | 822.3 X 901.7 X 827.1 |
| 25HCB330 | 0 | X | O | O | O | 792.2 | 993.8 | 95.2 | 19.0 | 166.7 | 627.1 | 231.8 | 71.4 | 12.7 | 419.1 | 393.7 | 431.8 | 93.4 | 106.6 | 822.3 X 901.7 X 1085.8 |
| 25HCB336 | 0 | X | O | O | O | 889.0 | 820.8 | 95.2 | 19.0 | 166.7 | 722.3 | 231.8 | 71.4 | 12.7 | 406.4 | 419.1 | 342.9 | 92.1 | 109.3 | 917.6 X 998.6 X 912.8 |
| 25HCB342 | 0 | X | O | O | O | 889.0 | 993.8 | 98.4 | 22.2 | 166.7 | 722.3 | 231.8 | 74.6 | 15.9 | 438.2 | 485.8 | 400.0 | 119.3 | 133.8 | 917.6 X 998.6 X 1085.8 |
| 25HCB348 | 0 | X | O | O | O | 889.0 | 820.8 | 98.4 | 22.2 | 166.7 | 722.3 | 231.8 | 74.6 | 15.9 | 482.6 | 482.6 | 368.3 | 128.4 | 142.0 | 917.6 X 998.6 X 912.8 |
| 25HCB360 | 1 | X | O | O | O | 889.0 | 993.8 | 98.4 | 22.2 | 166.7 | 722.3 | 231.8 | 74.6 | 15.9 | 482.6 | 482.6 | 482.6 | 135.6 | 150.1 | 917.6 X 998.6 X 1085.8 |
| | | 208-230-1-60 | 230-1-60 | 208/230-3-60 | 460-3-60 | | | | | | | | | | | | | | | |

X = YES
O = NO

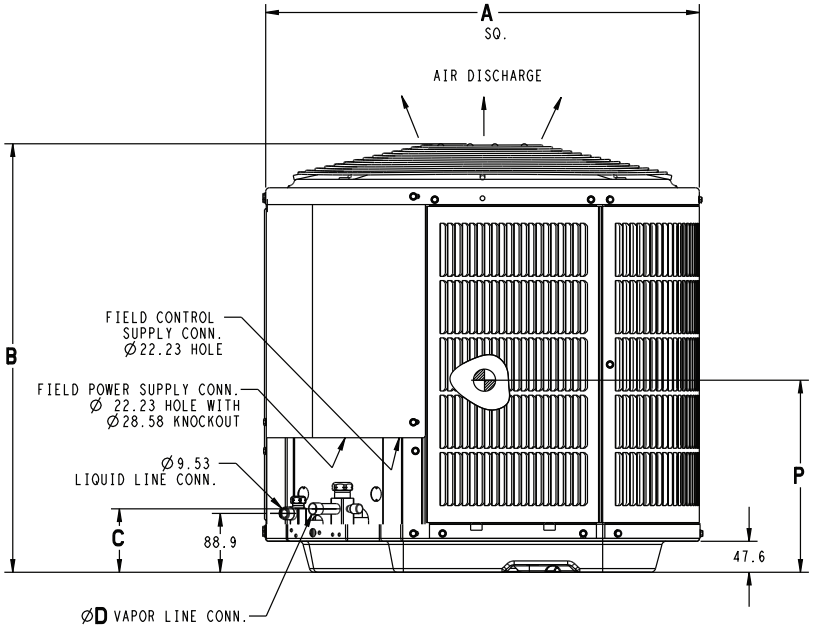


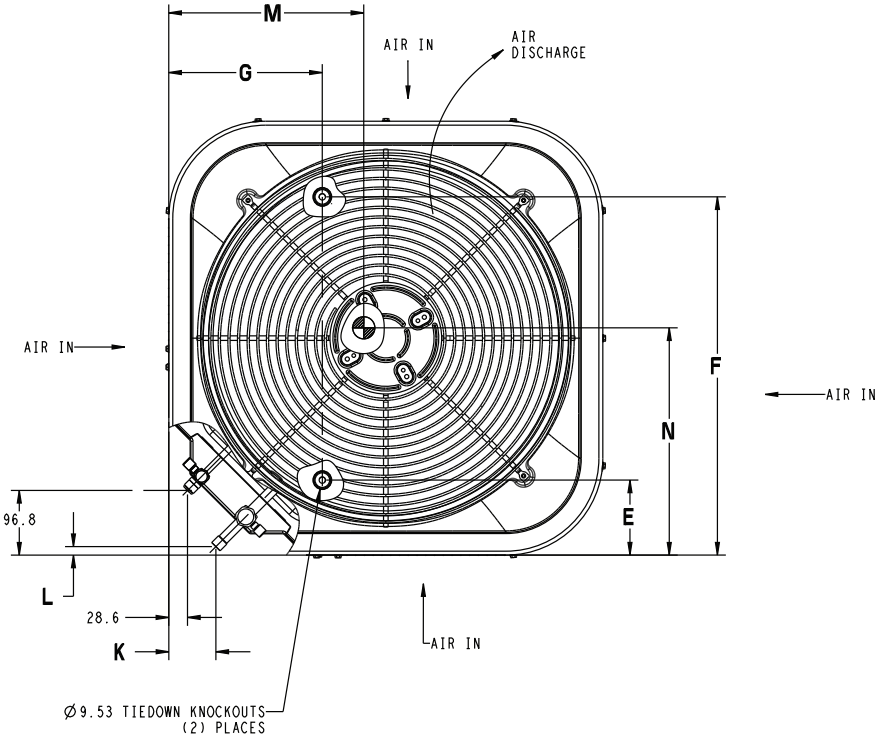


| UNIT SIZE | MINIMUM MOUNTING PAD DIMENSIONS |
|---|---|
| - | 660.4 X 660.4 |
| 18,24,30 | 800.1 X 800.1 |
| 36,42,48,60 | 889.0 X 889.0 |

## 25HCB3 BALANCE POINT WORKSHEET

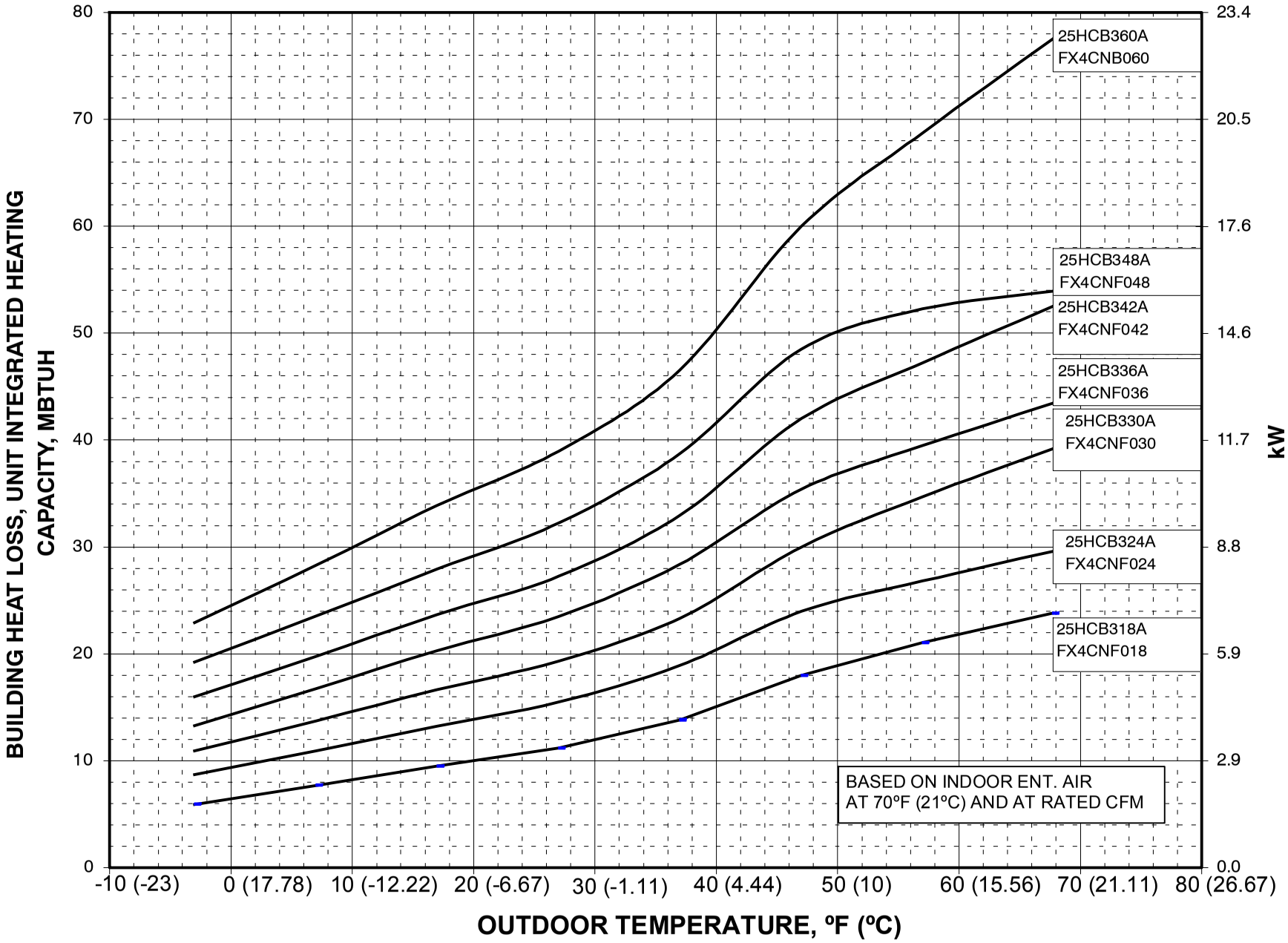

## CLEARANCES

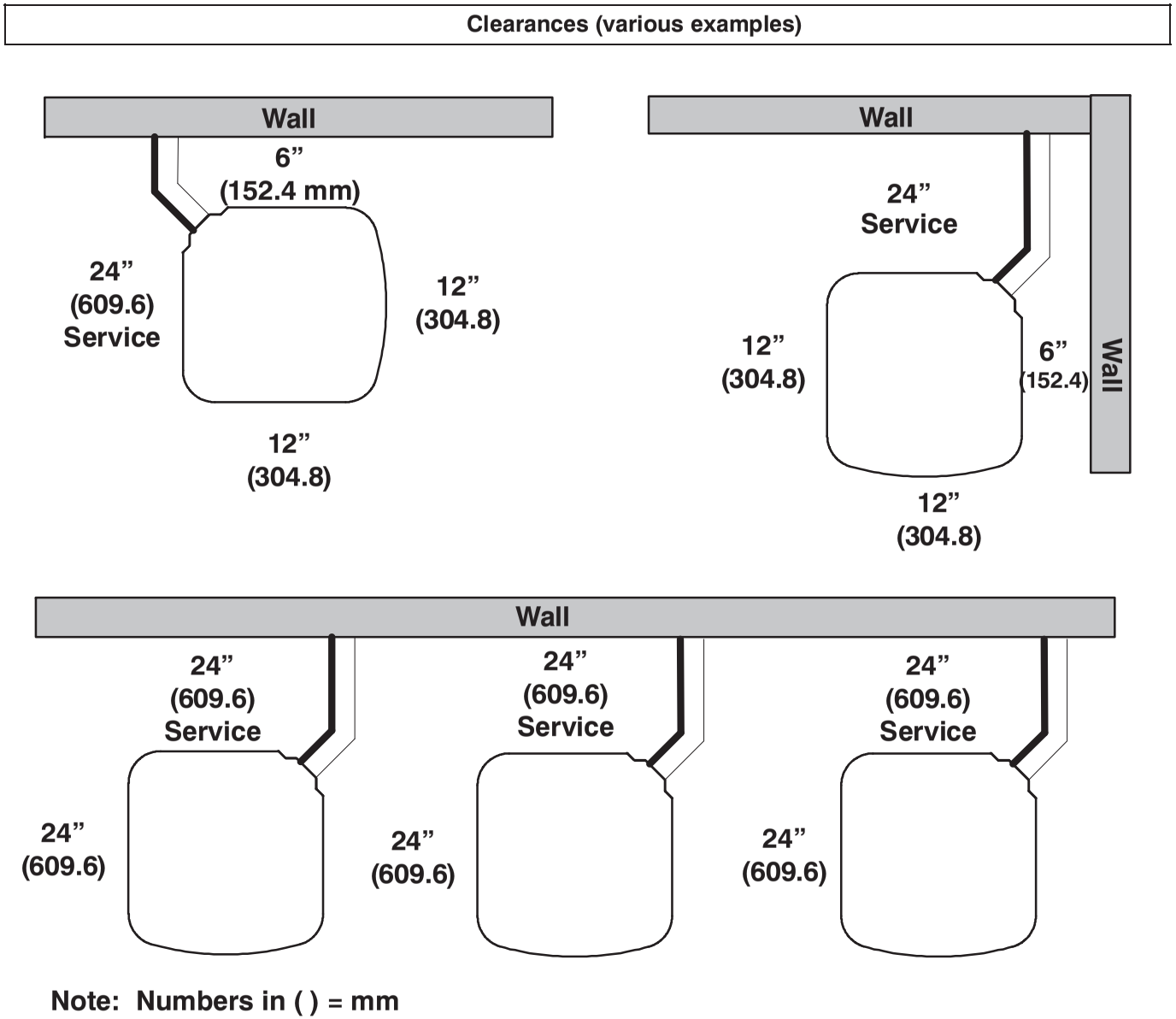


**Note: Numbers in ( ) = mm**

**IMPORTANT**: When installing multiple units in an alcove, roof well, or partially enclosed area, ensure there is adequate ventilation to prevent re-circulation of discharge air.

A07833

# COMBINATION RATINGS

| AHRI Ref. No. | Model Number | Coil Model Number | Furnace Model Number | Cooling Capacity | EER | SEER | High Temp | | HSPF | Low Temp | |
|---|---|---|---|---|---|---|---|---|---|---|---|
| | | | | | | | E Capacity | E COP | | H Capacity | H COP |
| 3850430 | 25HCB318A30 | †FB4CNF018 | | 17,200 | 11.0 | 13.0 | 17,400 | 3.60 | 8.0 | 10,200 | 2.34 |
| 3033387 | 25HCB318A30 | CAP**1814A** | 58CV(A,X)070–12 | 17,000 | 11.5 | 14.0 | 17,100 | 3.36 | 7.7 | 10,000 | 2.26 |
| 3033420 | 25HCB318A30 | CAP**1814A** | 58PH*045–08 | 17,000 | 11.5 | 14.0 | 17,400 | 3.46 | 7.7 | 10,200 | 2.32 |
| 3033386 | 25HCB318A30 | CAP**1814A**+TDR | | 17,100 | 10.5 | 13.0 | 18,000 | 3.34 | 7.7 | 10,600 | 2.20 |
| 3033389 | 25HCB318A30 | CAP**2414A** | 58CV(A,X)070–12 | 17,200 | 11.7 | 14.5 | 17,300 | 3.50 | 7.8 | 10,100 | 2.32 |
| 3033421 | 25HCB318A30 | CAP**2414A** | 58PH*045–08 | 17,500 | 12.0 | 14.8 | 17,700 | 3.64 | 8.2 | 10,300 | 2.38 |
| 4807758 | 25HCB318A30 | CAP**2414A** | 59*P5A040E14**10 | 17,400 | 11.8 | 14.5 | 17,400 | 3.46 | 7.7 | 10,200 | 2.28 |
| 3033388 | 25HCB318A30 | CAP**2414A**+TDR | | 17,300 | 10.8 | 13.2 | 18,000 | 3.48 | 7.8 | 10,700 | 2.26 |
| 3033392 | 25HCB318A30 | CAP**2417A** | 58CV(A,X)090–16 | 17,300 | 12.0 | 14.5 | 17,400 | 3.54 | 7.9 | 10,100 | 2.34 |
| 3618339 | 25HCB318A30 | CAP**2417A** | 58ME(B,C)040–12 | 17,800 | 12.0 | 15.0 | 17,800 | 3.82 | 8.2 | 10,300 | 2.46 |
| 3121363 | 25HCB318A30 | CAP**2417A** | 58ME(B,C)060–12 | 17,700 | 12.0 | 15.0 | 17,700 | 3.72 | 8.2 | 10,200 | 2.42 |
| 3121362 | 25HCB318A30 | CAP**2417A** | 58MEB040–12 | 17,800 | 12.0 | 15.0 | 17,800 | 3.82 | 8.2 | 10,300 | 2.46 |
| 3033391 | 25HCB318A30 | CAP**2417A** | 58MV(B,C)060–14 | 17,200 | 12.0 | 14.5 | 17,400 | 3.52 | 7.8 | 10,100 | 2.32 |
| 3757407 | 25HCB318A30 | CAP**2417A** | 58UVB060–14 | 17,200 | 12.0 | 14.5 | 17,400 | 3.52 | 7.8 | 10,100 | 2.32 |
| 3684907 | 25HCB318A30 | CAP**2417A** | 58VLR105–12 | 17,600 | 12.0 | 14.5 | 17,600 | 3.72 | 8.2 | 10,200 | 2.42 |
| 3684906 | 25HCB318A30 | CAP**2417A** | 58VMR105–12 | 17,300 | 12.0 | 14.5 | 17,400 | 3.58 | 8.0 | 10,100 | 2.36 |
| 4807759 | 25HCB318A30 | CAP**2417A** | 59*N*A060V17**14 | 17,500 | 12.1 | 15.0 | 17,400 | 3.50 | 7.8 | 10,100 | 2.30 |
| 4807760 | 25HCB318A30 | CAP**2417A** | 59*N*A080V17**14 | 17,400 | 12.1 | 15.0 | 17,200 | 3.46 | 7.8 | 10,000 | 2.30 |
| 4807761 | 25HCB318A30 | CAP**2417A** | 59*P5A040E14**10 | 17,400 | 11.8 | 14.5 | 17,400 | 3.46 | 7.7 | 10,200 | 2.28 |
| 4209687 | 25HCB318A30 | CAP**2417A** | OVLAAB036098 | 17,600 | 12.0 | 15.0 | 17,400 | 3.66 | 8.1 | 10,200 | 2.36 |
| 4209686 | 25HCB318A30 | CAP**2417A** | OVMAAB036098 | 17,700 | 12.0 | 15.0 | 17,600 | 3.72 | 8.2 | 10,300 | 2.38 |
| 3033390 | 25HCB318A30 | CAP**2417A**+TDR | | 17,300 | 10.8 | 13.2 | 18,000 | 3.48 | 7.8 | 10,700 | 2.26 |
| 3684924 | 25HCB318A30 | CAP**3619A**+TDR | | 17,500 | 10.9 | 13.0 | 18,000 | 3.52 | 7.7 | 10,800 | 2.28 |
| 3033404 | 25HCB318A30 | CNPH*2417A** | 58CV(A,X)070–12 | 17,200 | 11.7 | 14.5 | 17,400 | 3.54 | 7.9 | 10,100 | 2.34 |
| 3033405 | 25HCB318A30 | CNPH*2417A** | 58CV(A,X)090–16 | 17,200 | 12.0 | 14.5 | 17,500 | 3.58 | 7.9 | 10,100 | 2.34 |
| 3684910 | 25HCB318A30 | CNPH*2417A** | 58HDV060––12 | 17,600 | 11.5 | 14.0 | 17,800 | 3.80 | 8.2 | 10,600 | 2.42 |
| 3618345 | 25HCB318A30 | CNPH*2417A** | 58ME(B,C)040–12 | 17,700 | 12.0 | 15.0 | 17,800 | 3.78 | 8.2 | 10,300 | 2.42 |
| 3121367 | 25HCB318A30 | CNPH*2417A** | 58ME(B,C)060–12 | 17,400 | 12.0 | 15.0 | 17,600 | 3.66 | 8.2 | 10,200 | 2.38 |
| 3121366 | 25HCB318A30 | CNPH*2417A** | 58MEB040–12 | 17,700 | 12.0 | 15.0 | 17,800 | 3.78 | 8.2 | 10,300 | 2.42 |
| 3033402 | 25HCB318A30 | CNPH*2417A** | 58MV(B,C)060–14 | 17,200 | 11.7 | 14.5 | 17,400 | 3.56 | 7.9 | 10,100 | 2.34 |
| 3033403 | 25HCB318A30 | CNPH*2417A** | 58MV(B,C)080–14 | 17,200 | 11.7 | 14.5 | 17,500 | 3.58 | 7.9 | 10,100 | 2.34 |
| 3033424 | 25HCB318A30 | CNPH*2417A** | 58PH*045–08 | 17,400 | 12.0 | 14.8 | 17,700 | 3.66 | 8.1 | 10,300 | 2.38 |
| 3684912 | 25HCB318A30 | CNPH*2417A** | 58VLR105–12 | 17,600 | 12.0 | 14.5 | 17,800 | 3.76 | 8.2 | 10,300 | 2.42 |
| 3684911 | 25HCB318A30 | CNPH*2417A** | 58VMR105–12 | 17,200 | 11.5 | 14.0 | 17,600 | 3.60 | 8.0 | 10,200 | 2.36 |
| 4807770 | 25HCB318A30 | CNPH*2417A** | 59*N*A060V17**14 | 17,500 | 12.0 | 15.0 | 17,400 | 3.54 | 7.8 | 10,100 | 2.30 |
| 4807771 | 25HCB318A30 | CNPH*2417A** | 59*N*A080V17**14 | 17,400 | 12.1 | 15.0 | 17,300 | 3.50 | 7.8 | 10,000 | 2.30 |
| 4807772 | 25HCB318A30 | CNPH*2417A** | 59*P5A040E14**10 | 17,300 | 11.8 | 14.5 | 17,500 | 3.46 | 7.7 | 10,200 | 2.26 |
| 4209693 | 25HCB318A30 | CNPH*2417A** | OVLAAB036098 | 17,600 | 12.0 | 15.0 | 17,500 | 3.70 | 8.2 | 10,300 | 2.38 |
| 4209692 | 25HCB318A30 | CNPH*2417A** | OVMAAB036098 | 17,700 | 12.0 | 15.0 | 17,700 | 3.76 | 8.3 | 10,400 | 2.40 |
| 3033400 | 25HCB318A30 | CNPH*2417A**+TDR | | 17,300 | 10.8 | 13.2 | 18,000 | 3.54 | 7.9 | 10,800 | 2.28 |
| 3033394 | 25HCB318A30 | CNPV*1814A** | 58CV(A,X)070–12 | 17,100 | 11.7 | 14.5 | 17,400 | 3.48 | 7.8 | 10,100 | 2.30 |
| 3033422 | 25HCB318A30 | CNPV*1814A** | 58PH*045–08 | 17,200 | 11.5 | 14.5 | 17,600 | 3.54 | 8.0 | 10,200 | 2.32 |
| 4807762 | 25HCB318A30 | CNPV*1814A** | 59*P5A040E14**10 | 17,100 | 11.6 | 14.2 | 17,300 | 3.36 | 7.7 | 10,100 | 2.22 |
| 3033393 | 25HCB318A30 | CNPV*1814A**+TDR | | 17,200 | 10.5 | 13.0 | 18,000 | 3.48 | 7.8 | 10,700 | 2.26 |
| 3684919 | 25HCB318A30 | CNPV*1917A** | 58CV(A,X)090–16 | 17,400 | 12.0 | 15.0 | 17,500 | 3.62 | 7.8 | 10,100 | 2.36 |
| 3684921 | 25HCB318A30 | CNPV*1917A** | 58ME(B,C)060–12 | 17,800 | 12.0 | 15.0 | 17,800 | 3.84 | 8.2 | 10,300 | 2.46 |
| 3684920 | 25HCB318A30 | CNPV*1917A** | 58MEB040–12 | 18,000 | 12.5 | 15.5 | 18,000 | 3.94 | 8.3 | 10,400 | 2.48 |
| 3684918 | 25HCB318A30 | CNPV*1917A** | 58MV(B,C)060–14 | 17,400 | 12.0 | 15.0 | 17,500 | 3.60 | 7.8 | 10,100 | 2.36 |
| 3685287 | 25HCB318A30 | CNPV*1917A** | 58UVB060–14 | 17,400 | 12.0 | 15.0 | 17,500 | 3.60 | 7.8 | 10,100 | 2.36 |
| 4807763 | 25HCB318A30 | CNPV*1917A** | 59*N*A060V17**14 | 17,600 | 12.2 | 15.2 | 17,500 | 3.60 | 7.8 | 10,100 | 2.32 |
| 4807764 | 25HCB318A30 | CNPV*1917A** | 59*N*A080V17**14 | 17,500 | 12.2 | 15.2 | 17,400 | 3.56 | 7.8 | 10,100 | 2.32 |
| 4807765 | 25HCB318A30 | CNPV*1917A** | 59*P5A040E14**10 | 17,600 | 11.9 | 14.5 | 17,600 | 3.56 | 7.8 | 10,200 | 2.30 |
| 4209689 | 25HCB318A30 | CNPV*1917A** | OVLAAB036098 | 17,700 | 12.0 | 15.0 | 17,600 | 3.76 | 8.3 | 10,300 | 2.40 |
| 4209688 | 25HCB318A30 | CNPV*1917A** | OVMAAB036098 | 17,900 | 12.0 | 15.0 | 17,800 | 3.82 | 8.4 | 10,400 | 2.42 |
| 3684917 | 25HCB318A30 | CNPV*1917A**+TDR | | 17,400 | 10.9 | 13.0 | 18,000 | 3.58 | 7.7 | 10,800 | 2.28 |
| 3033396 | 25HCB318A30 | CNPV*2414A** | 58CV(A,X)070–12 | 17,200 | 11.7 | 14.5 | 17,400 | 3.54 | 7.9 | 10,100 | 2.34 |
| 3033423 | 25HCB318A30 | CNPV*2414A** | 58PH*045–08 | 17,400 | 12.0 | 14.8 | 17,700 | 3.66 | 8.1 | 10,300 | 2.38 |
| 4807766 | 25HCB318A30 | CNPV*2414A** | 59*P5A040E14**10 | 17,300 | 11.8 | 14.5 | 17,500 | 3.46 | 7.7 | 10,200 | 2.26 |
| 3033395 | 25HCB318A30 | CNPV*2414A**+TDR | | 17,300 | 10.8 | 13.2 | 18,000 | 3.54 | 7.8 | 10,800 | 2.26 |
| 3033399 | 25HCB318A30 | CNPV*2417A** | 58CV(A,X)090–16 | 17,200 | 12.0 | 14.5 | 17,500 | 3.58 | 7.9 | 10,100 | 2.34 |
| 4209696 | 25HCB318A30 | CNPV*2417A** | 58HDV040––12 | 17,900 | 11.7 | 15.0 | 18,000 | 3.80 | 8.3 | 10,600 | 2.40 |
| 4209697 | 25HCB318A30 | CNPV*2417A** | 58HDV060––12 | 17,900 | 11.7 | 15.0 | 18,000 | 3.80 | 8.3 | 10,500 | 2.40 |
| 3618340 | 25HCB318A30 | CNPV*2417A** | 58ME(B,C)040–12 | 17,700 | 12.0 | 15.0 | 17,800 | 3.78 | 8.2 | 10,300 | 2.42 |
| 3121365 | 25HCB318A30 | CNPV*2417A** | 58ME(B,C)060–12 | 17,400 | 12.0 | 15.0 | 17,600 | 3.66 | 8.2 | 10,200 | 2.38 |
| 3121364 | 25HCB318A30 | CNPV*2417A** | 58MEB040–12 | 17,700 | 12.0 | 15.0 | 17,800 | 3.78 | 8.2 | 10,300 | 2.42 |
| 3033398 | 25HCB318A30 | CNPV*2417A** | 58MV(B,C)060–14 | 17,300 | 11.7 | 14.5 | 17,400 | 3.56 | 7.9 | 10,100 | 2.34 |
| 3758722 | 25HCB318A30 | CNPV*2417A** | 58UVB060–14 | 17,300 | 11.7 | 14.5 | 17,400 | 3.56 | 7.9 | 10,100 | 2.34 |
| 3684909 | 25HCB318A30 | CNPV*2417A** | 58VLR105–12 | 17,600 | 12.0 | 14.5 | 17,800 | 3.76 | 8.2 | 10,300 | 2.42 |
| 3684908 | 25HCB318A30 | CNPV*2417A** | 58VMR105–12 | 17,300 | 11.5 | 14.0 | 17,600 | 3.60 | 8.0 | 10,200 | 2.36 |
| 4807767 | 25HCB318A30 | CNPV*2417A** | 59*N*A060V17**14 | 17,500 | 12.0 | 15.0 | 17,400 | 3.54 | 7.8 | 10,100 | 2.30 |
| 4807768 | 25HCB318A30 | CNPV*2417A** | 59*N*A080V17**14 | 17,400 | 12.1 | 15.0 | 17,300 | 3.50 | 7.8 | 10,000 | 2.30 |
| 4807769 | 25HCB318A30 | CNPV*2417A** | 59*P5A040E14**10 | 17,300 | 11.8 | 14.5 | 17,500 | 3.46 | 7.7 | 10,200 | 2.26 |
| 4209691 | 25HCB318A30 | CNPV*2417A** | OVLAAB036098 | 17,600 | 12.0 | 15.0 | 17,500 | 3.70 | 8.1 | 10,300 | 2.38 |
| 4209690 | 25HCB318A30 | CNPV*2417A** | OVMAAB036098 | 17,700 | 12.0 | 15.0 | 17,700 | 3.76 | 8.3 | 10,400 | 2.40 |
| 3033397 | 25HCB318A30 | CNPV*2417A**+TDR | | 17,300 | 10.8 | 13.2 | 18,000 | 3.54 | 7.9 | 10,800 | 2.28 |
| 3033411 | 25HCB318A30 | CSPH*2412A** | 58CV(A,X)070–12 | 17,300 | 12.0 | 14.5 | 17,400 | 3.52 | 7.9 | 10,100 | 2.32 |
| 3033412 | 25HCB318A30 | CSPH*2412A** | 58CV(A,X)090–16 | 17,400 | 12.0 | 14.5 | 17,500 | 3.56 | 7.9 | 10,100 | 2.34 |
| 3684913 | 25HCB318A30 | CSPH*2412A** | 58HDV040––12 | 17,800 | 11.5 | 14.0 | 17,800 | 3.78 | 8.2 | 10,600 | 2.40 |
| 3684914 | 25HCB318A30 | CSPH*2412A** | 58HDV060––12 | 17,800 | 11.5 | 14.0 | 17,800 | 3.78 | 8.2 | 10,600 | 2.40 |

See notes on pg. 35

# COMBINATION RATINGS CONTINUED

| AHRI Ref. No. | Model Number | Coil Model Number | Furnace Model Number | Cooling Capacity | EER | SEER | High Temp | | HSPF | Low Temp | |
|---|---|---|---|---|---|---|---|---|---|---|---|
| | | | | | | | E Capacity | E COP | | H Capacity | H COP |
| 3618346 | 25HCB318A30 | CSPH*2412A** | 58ME(B,C)040−12 | 17,700 | 12.0 | 15.0 | 17,700 | 3.72 | 8.2 | 10,200 | 2.40 |
| 3121369 | 25HCB318A30 | CSPH*2412A** | 58ME(B,C)060−12 | 17,400 | 12.0 | 15.0 | 17,400 | 3.58 | 8.0 | 10,100 | 2.36 |
| 3121368 | 25HCB318A30 | CSPH*2412A** | 58MEB040−12 | 17,700 | 12.0 | 15.0 | 17,700 | 3.72 | 8.2 | 10,200 | 2.40 |
| 3033409 | 25HCB318A30 | CSPH*2412A** | 58MV(B,C)060−14 | 17,400 | 12.0 | 14.5 | 17,400 | 3.54 | 7.9 | 10,100 | 2.34 |
| 3033410 | 25HCB318A30 | CSPH*2412A** | 58MV(B,C)080−14 | 17,400 | 12.0 | 14.5 | 17,500 | 3.56 | 7.9 | 10,100 | 2.34 |
| 3033425 | 25HCB318A30 | CSPH*2412A** | 58PH*045−08 | 17,600 | 12.0 | 14.8 | 17,700 | 3.64 | 8.0 | 10,200 | 2.36 |
| 3684916 | 25HCB318A30 | CSPH*2412A** | 58VLR105−12 | 17,600 | 12.0 | 14.5 | 17,800 | 3.76 | 8.2 | 10,300 | 2.42 |
| 3684915 | 25HCB318A30 | CSPH*2412A** | 58VMR105−12 | 17,400 | 12.0 | 14.5 | 17,600 | 3.60 | 8.0 | 10,200 | 2.36 |
| 4807773 | 25HCB318A30 | CSPH*2412A** | 59*N*A060V17**14 | 17,600 | 12.1 | 15.0 | 17,400 | 3.52 | 7.8 | 10,100 | 2.30 |
| 4807774 | 25HCB318A30 | CSPH*2412A** | 59*N*A080V17**14 | 17,600 | 12.2 | 15.2 | 17,300 | 3.50 | 7.8 | 10,100 | 2.30 |
| 4807775 | 25HCB318A30 | CSPH*2412A** | 59*P5A040E14**10 | 17,400 | 11.8 | 14.5 | 17,400 | 3.42 | 7.7 | 10,100 | 2.26 |
| 4209695 | 25HCB318A30 | CSPH*2412A** | OVLAAB036098 | 17,700 | 12.0 | 15.0 | 17,600 | 3.68 | 8.1 | 10,300 | 2.36 |
| 4209694 | 25HCB318A30 | CSPH*2412A** | OVMAAB036098 | 17,900 | 12.0 | 15.0 | 17,700 | 3.74 | 8.2 | 10,400 | 2.38 |
| 3033407 | 25HCB318A30 | CSPH*2412A**+TDR | | 17,500 | 10.8 | 13.2 | 18,000 | 3.54 | 7.9 | 10,800 | 2.28 |
| 3684925 | 25HCB318A30 | FB4CNF018+TXV | | 17,400 | 11.5 | 14.5 | 17,700 | 3.60 | 7.8 | 10,300 | 2.34 |
| 3850431 | 25HCB318A30 | FB4CNF024 | | 17,200 | 11.0 | 13.0 | 17,400 | 3.60 | 8.0 | 10,200 | 2.32 |
| 3684926 | 25HCB318A30 | FB4CNF024+TXV | | 17,300 | 11.5 | 14.5 | 17,700 | 3.60 | 7.8 | 10,300 | 2.34 |
| 3033416 | 25HCB318A30 | FE4ANF002+UI | | 17,500 | 12.0 | 15.0 | 16,800 | 3.62 | 8.2 | 10,100 | 2.38 |
| 3033417 | 25HCB318A30 | FF1ENP018 | | 17,100 | 10.5 | 13.0 | 18,000 | 3.40 | 7.7 | 10,700 | 2.22 |
| 3463943 | 25HCB318A30 | FF1ENP019 | | 17,300 | 11.5 | 14.0 | 17,700 | 3.60 | 8.0 | 10,300 | 2.34 |
| 3033418 | 25HCB318A30 | FF1ENP024 | | 17,200 | 10.8 | 13.2 | 17,600 | 3.40 | 7.7 | 10,700 | 2.24 |
| 3463944 | 25HCB318A30 | FF1ENP025 | | 17,600 | 12.0 | 14.5 | 17,700 | 3.70 | 8.2 | 10,300 | 2.40 |
| 3405749 | 25HCB318A30 | FV4CNF002 | | 17,500 | 12.0 | 15.0 | 16,800 | 3.62 | 8.2 | 10,100 | 2.38 |
| 3684922 | 25HCB318A30 | FX4DNF019 | | 17,800 | 12.2 | 15.0 | 17,700 | 3.74 | 8.0 | 10,300 | 2.42 |
| 3684923 | 25HCB318A30 | FX4DNF025 | | 17,700 | 12.2 | 15.0 | 17,800 | 3.72 | 8.0 | 10,300 | 2.42 |
| 3850432 | 25HCB318A30 | FY5BNF018 | | 17,200 | 11.0 | 13.0 | 17,400 | 3.48 | 8.0 | 10,500 | 2.26 |
| 3684927 | 25HCB318A30 | FY5BNF018+TXV | | 17,300 | 11.0 | 13.5 | 17,900 | 3.48 | 7.7 | 10,500 | 2.28 |
| 3850433 | 25HCB318A30 | FY5BNF024 | | 17,200 | 11.0 | 13.0 | 17,400 | 3.52 | 8.0 | 10,500 | 2.28 |
| 3684928 | 25HCB318A30 | FY5BNF024+TXV | | 17,400 | 11.2 | 13.5 | 18,000 | 3.52 | 7.7 | 10,600 | 2.30 |
| | | | | | | | | | | | |
| 3853212 | 25HCB324A30 | †FY5BNF024 | | 23,000 | 11.0 | 13.0 | 23,000 | 3.66 | 8.0 | 14,800 | 2.54 |
| 3033436 | 25HCB324A30 | CAP**2414A** | 58CV(A,X)070−12 | 22,600 | 11.5 | 14.0 | 23,400 | 3.62 | 8.3 | 14,300 | 2.58 |
| 3033427 | 25HCB324A30 | CAP**2414A** | 58PH*045−08 | 22,800 | 11.5 | 14.0 | 23,800 | 3.68 | 8.4 | 14,500 | 2.60 |
| 4807776 | 25HCB324A30 | CAP**2414A** | 59*P5A040E14**10 | 22,600 | 11.0 | 13.0 | 24,000 | 3.58 | 8.2 | 14,900 | 2.48 |
| 3033435 | 25HCB324A30 | CAP**2414A**+TDR | | 22,800 | 10.5 | 13.0 | 24,400 | 3.60 | 8.3 | 15,100 | 2.50 |
| 3033439 | 25HCB324A30 | CAP**2417A** | 58CV(A,X)090−16 | 22,800 | 11.7 | 14.5 | 23,400 | 3.66 | 8.4 | 14,300 | 2.60 |
| 3618347 | 25HCB324A30 | CAP**2417A** | 58ME(B,C)040−12 | 23,000 | 12.0 | 14.5 | 23,600 | 3.82 | 8.5 | 14,500 | 2.66 |
| 3121371 | 25HCB324A30 | CAP**2417A** | 58ME(B,C)060−12 | 23,000 | 12.0 | 14.5 | 23,600 | 3.84 | 8.6 | 14,500 | 2.68 |
| 3121372 | 25HCB324A30 | CAP**2417A** | 58ME(B,C)080−12 | 23,000 | 12.0 | 14.5 | 22,600 | 3.80 | 8.6 | 14,500 | 2.66 |
| 3121370 | 25HCB324A30 | CAP**2417A** | 58MEB040−12 | 23,000 | 12.0 | 14.5 | 23,600 | 3.82 | 8.5 | 14,500 | 2.66 |
| 3033438 | 25HCB324A30 | CAP**2417A** | 58MV(B,C)060−14 | 22,800 | 11.7 | 14.5 | 23,400 | 3.64 | 8.4 | 14,300 | 2.58 |
| 3757408 | 25HCB324A30 | CAP**2417A** | 58UVB060−14 | 22,800 | 11.7 | 14.5 | 23,400 | 3.64 | 8.4 | 14,300 | 2.58 |
| 3684945 | 25HCB324A30 | CAP**2417A** | 58VLR105−12 | 22,800 | 11.5 | 14.0 | 23,400 | 3.72 | 8.5 | 14,400 | 2.62 |
| 3684944 | 25HCB324A30 | CAP**2417A** | 58VMR105−12 | 22,600 | 11.5 | 14.0 | 23,000 | 3.62 | 8.2 | 14,300 | 2.58 |
| 4807777 | 25HCB324A30 | CAP**2417A** | 59*N*A060V17**14 | 22,600 | 11.8 | 14.2 | 23,400 | 3.58 | 8.2 | 14,300 | 2.54 |
| 4807778 | 25HCB324A30 | CAP**2417A** | 59*N*A080V17**14 | 22,400 | 11.8 | 14.2 | 23,200 | 3.56 | 8.2 | 14,200 | 2.52 |
| 4807779 | 25HCB324A30 | CAP**2417A** | 59*P5A040E14**10 | 22,600 | 11.0 | 13.3 | 24,000 | 3.60 | 8.2 | 14,900 | 2.48 |
| 4807780 | 25HCB324A30 | CAP**2417A** | 59*P5A060E17**14 | 22,600 | 11.8 | 14.2 | 23,400 | 3.62 | 8.2 | 14,300 | 2.54 |
| 4209699 | 25HCB324A30 | CAP**2417A** | OVLAAB036098 | 22,600 | 11.5 | 14.5 | 23,200 | 3.68 | 8.3 | 14,400 | 2.58 |
| 4209698 | 25HCB324A30 | CAP**2417A** | OVMAAB036098 | 22,600 | 11.5 | 14.5 | 23,400 | 3.68 | 8.4 | 14,500 | 2.58 |
| 4209700 | 25HCB324A30 | CAP**2417A** | OVMAAB042112 | 22,400 | 12.0 | 14.5 | 23,000 | 3.66 | 8.2 | 14,300 | 2.58 |
| 3033437 | 25HCB324A30 | CAP**2417A**+TDR | | 22,800 | 10.5 | 13.0 | 24,400 | 3.60 | 8.3 | 15,100 | 2.50 |
| 3033441 | 25HCB324A30 | CAP**3014A** | 58CV(A,X)070−12 | 23,000 | 11.7 | 14.5 | 23,000 | 3.64 | 8.4 | 14,400 | 2.60 |
| 3033428 | 25HCB324A30 | CAP**3014A** | 58PH*045−08 | 23,200 | 11.5 | 14.5 | 23,000 | 3.70 | 8.5 | 14,500 | 2.62 |
| 4807781 | 25HCB324A30 | CAP**3014A** | 59*P5A040E14**10 | 22,800 | 11.0 | 13.3 | 23,600 | 3.58 | 8.2 | 15,000 | 2.50 |
| 3033440 | 25HCB324A30 | CAP**3014A**+TDR | | 23,000 | 10.6 | 13.0 | 23,400 | 3.56 | 8.3 | 15,200 | 2.52 |
| 3033444 | 25HCB324A30 | CAP**3017A** | 58CV(A,X)090−16 | 23,000 | 11.7 | 14.5 | 23,000 | 3.68 | 8.5 | 14,300 | 2.62 |
| 3618348 | 25HCB324A30 | CAP**3017A** | 58ME(B,C)040−12 | 23,400 | 12.0 | 14.5 | 22,600 | 3.82 | 8.6 | 14,500 | 2.70 |
| 3121374 | 25HCB324A30 | CAP**3017A** | 58ME(B,C)060−12 | 23,400 | 12.0 | 14.5 | 22,600 | 3.82 | 8.5 | 14,500 | 2.70 |
| 3121375 | 25HCB324A30 | CAP**3017A** | 58ME(B,C)080−12 | 23,200 | 12.0 | 14.5 | 22,800 | 3.80 | 8.5 | 14,500 | 2.68 |
| 3121373 | 25HCB324A30 | CAP**3017A** | 58MEB040−12 | 23,400 | 12.0 | 14.5 | 22,600 | 3.82 | 8.6 | 14,500 | 2.70 |
| 3033443 | 25HCB324A30 | CAP**3017A** | 58MV(B,C)060−14 | 23,000 | 11.7 | 14.5 | 23,000 | 3.68 | 8.5 | 14,300 | 2.62 |
| 3757409 | 25HCB324A30 | CAP**3017A** | 58UVB060−14 | 23,000 | 11.7 | 14.5 | 23,000 | 3.68 | 8.5 | 14,300 | 2.62 |
| 3684947 | 25HCB324A30 | CAP**3017A** | 58VLR105−12 | 23,200 | 12.0 | 14.5 | 23,200 | 3.76 | 8.5 | 14,400 | 2.66 |
| 3684946 | 25HCB324A30 | CAP**3017A** | 58VMR105−12 | 22,800 | 12.0 | 14.5 | 23,000 | 3.68 | 8.5 | 14,300 | 2.60 |
| 4807782 | 25HCB324A30 | CAP**3017A** | 59*N*A060V17**14 | 22,800 | 11.8 | 14.2 | 23,200 | 3.64 | 8.2 | 14,400 | 2.56 |
| 4807783 | 25HCB324A30 | CAP**3017A** | 59*N*A080V17**14 | 22,800 | 12.0 | 14.5 | 23,000 | 3.62 | 8.2 | 14,200 | 2.54 |
| 4807784 | 25HCB324A30 | CAP**3017A** | 59*P5A040E14**10 | 23,000 | 11.0 | 13.3 | 23,400 | 3.60 | 8.2 | 15,000 | 2.52 |
| 4807785 | 25HCB324A30 | CAP**3017A** | 59*P5A060E17**14 | 23,000 | 12.0 | 14.5 | 23,200 | 3.68 | 8.2 | 14,400 | 2.58 |
| 4209702 | 25HCB324A30 | CAP**3017A** | OVLAAB036098 | 22,800 | 12.0 | 14.5 | 23,000 | 3.72 | 8.5 | 14,400 | 2.60 |
| 4209701 | 25HCB324A30 | CAP**3017A** | OVMAAB036098 | 22,800 | 12.0 | 14.5 | 23,000 | 3.72 | 8.3 | 14,500 | 2.60 |
| 4209703 | 25HCB324A30 | CAP**3017A** | OVMAAB042112 | 22,800 | 12.0 | 15.0 | 22,800 | 3.72 | 8.5 | 14,300 | 2.60 |
| 3033442 | 25HCB324A30 | CAP**3017A**+TDR | | 23,000 | 10.6 | 13.0 | 23,400 | 3.56 | 8.3 | 15,200 | 2.52 |
| 3684960 | 25HCB324A30 | CAP**3619A** | 58HDV040−−12 | 23,400 | 11.5 | 14.0 | 23,200 | 3.76 | 8.5 | 14,700 | 2.64 |
| 3684961 | 25HCB324A30 | CAP**3619A** | 58HDV060−−12 | 23,600 | 11.5 | 14.0 | 23,200 | 3.80 | 8.6 | 14,800 | 2.66 |
| 3684964 | 25HCB324A30 | CAP**3619A**+TDR | | 23,200 | 10.9 | 13.0 | 23,600 | 3.60 | 8.2 | 15,200 | 2.52 |
| 3033462 | 25HCB324A30 | CNPH*2417A** | 58CV(A,X)070−12 | 22,600 | 11.5 | 14.0 | 23,400 | 3.68 | 8.4 | 14,400 | 2.58 |
| 3033463 | 25HCB324A30 | CNPH*2417A** | 58CV(A,X)090−16 | 22,800 | 11.6 | 14.5 | 23,400 | 3.72 | 8.5 | 14,400 | 2.62 |
| 3033464 | 25HCB324A30 | CNPH*2417A** | 58CV(A,X)110−20 | 22,800 | 11.5 | 14.0 | 23,400 | 3.70 | 8.5 | 14,400 | 2.60 |

See notes on pg. 35

# COMBINATION RATINGS CONTINUED

| AHRI Ref. No. | Model Number | Coil Model Number | Furnace Model Number | Cooling Capacity | EER | SEER | High Temp | | HSPF | Low Temp | |
|---|---|---|---|---|---|---|---|---|---|---|---|
| | | | | | | | E Capacity | E COP | | H Capacity | H COP |
| 3033465 | 25HCB324A30 | CNPH*2417A** | 58CV(A,X)135−22 | 22,800 | 11.5 | 14.0 | 23,400 | 3.70 | 8.5 | 14,400 | 2.60 |
| 3033466 | 25HCB324A30 | CNPH*2417A** | 58CV(A,X)155−22 | 22,800 | 11.5 | 14.0 | 23,400 | 3.72 | 8.5 | 14,400 | 2.60 |
| 3684929 | 25HCB324A30 | CNPH*2417A** | 58HDV040−−12 | 22,400 | 11.2 | 13.5 | 23,800 | 3.70 | 8.4 | 14,600 | 2.58 |
| 3684930 | 25HCB324A30 | CNPH*2417A** | 58HDV060−−12 | 22,800 | 11.2 | 13.5 | 23,800 | 3.76 | 8.5 | 14,700 | 2.60 |
| 3684931 | 25HCB324A30 | CNPH*2417A** | 58HDV080−−20 | 23,200 | 11.2 | 13.5 | 23,800 | 3.90 | 8.5 | 14,800 | 2.66 |
| 3684932 | 25HCB324A30 | CNPH*2417A** | 58HDV100−−20 | 23,000 | 11.5 | 14.0 | 23,800 | 3.84 | 8.5 | 14,700 | 2.64 |
| 3618336 | 25HCB324A30 | CNPH*2417A** | 58ME(B,C)040−12 | 22,800 | 11.5 | 14.5 | 23,600 | 3.82 | 8.5 | 14,500 | 2.64 |
| 3121383 | 25HCB324A30 | CNPH*2417A** | 58ME(B,C)060−12 | 22,800 | 11.5 | 14.5 | 23,600 | 3.84 | 8.5 | 14,500 | 2.66 |
| 3121384 | 25HCB324A30 | CNPH*2417A** | 58ME(B,C)080−12 | 22,800 | 11.5 | 14.5 | 22,600 | 3.80 | 8.6 | 14,500 | 2.64 |
| 3121382 | 25HCB324A30 | CNPH*2417A** | 58MEB040−12 | 22,800 | 11.5 | 14.5 | 23,600 | 3.82 | 8.5 | 14,500 | 2.64 |
| 3033457 | 25HCB324A30 | CNPH*2417A** | 58MV(B,C)060−14 | 22,800 | 11.5 | 14.0 | 23,400 | 3.70 | 8.5 | 14,400 | 2.60 |
| 3033458 | 25HCB324A30 | CNPH*2417A** | 58MV(B,C)080−14 | 22,800 | 11.5 | 14.0 | 23,400 | 3.70 | 8.5 | 14,400 | 2.60 |
| 3033459 | 25HCB324A30 | CNPH*2417A** | 58MV(B,C)080−20 | 22,800 | 11.5 | 14.0 | 23,400 | 3.70 | 8.5 | 14,400 | 2.60 |
| 3033460 | 25HCB324A30 | CNPH*2417A** | 58MV(B,C)100−20 | 22,800 | 11.5 | 14.0 | 23,400 | 3.72 | 8.5 | 14,400 | 2.60 |
| 3033461 | 25HCB324A30 | CNPH*2417A** | 58MV(B,C)120−20 | 22,600 | 11.5 | 14.0 | 23,400 | 3.66 | 8.4 | 14,400 | 2.58 |
| 3033431 | 25HCB324A30 | CNPH*2417A** | 58PH*045−08 | 22,800 | 11.5 | 14.0 | 23,800 | 3.72 | 8.5 | 14,500 | 2.60 |
| 3684953 | 25HCB324A30 | CNPH*2417A** | 58VLR105−12 | 22,800 | 11.5 | 14.0 | 23,600 | 3.78 | 8.4 | 14,500 | 2.64 |
| 3684952 | 25HCB324A30 | CNPH*2417A** | 58VMR105−12 | 22,600 | 11.5 | 14.0 | 23,200 | 3.66 | 8.3 | 14,400 | 2.58 |
| 4807800 | 25HCB324A30 | CNPH*2417A** | 59*N*A060V17**14 | 22,600 | 11.5 | 14.0 | 23,400 | 3.62 | 8.2 | 14,400 | 2.54 |
| 4807801 | 25HCB324A30 | CNPH*2417A** | 59*N*A080V17**14 | 22,400 | 11.8 | 14.2 | 23,400 | 3.60 | 8.2 | 14,300 | 2.54 |
| 4807802 | 25HCB324A30 | CNPH*2417A** | 59*N*A100V21**20 | 22,800 | 11.8 | 14.2 | 23,600 | 3.72 | 8.5 | 14,500 | 2.58 |
| 4807803 | 25HCB324A30 | CNPH*2417A** | 59*N*A120V24**22 | 22,600 | 11.8 | 14.2 | 23,600 | 3.70 | 8.2 | 14,400 | 2.58 |
| 4807804 | 25HCB324A30 | CNPH*2417A** | 59*P5A040E14**10 | 22,600 | 11.0 | 13.0 | 24,200 | 3.64 | 8.2 | 15,000 | 2.50 |
| 4807805 | 25HCB324A30 | CNPH*2417A** | 59*P5A060E17**14 | 22,400 | 11.8 | 14.2 | 23,400 | 3.60 | 8.2 | 14,300 | 2.54 |
| 4209711 | 25HCB324A30 | CNPH*2417A** | OVLAAB036098 | 22,600 | 11.5 | 14.5 | 23,400 | 3.72 | 8.5 | 14,500 | 2.58 |
| 4209710 | 25HCB324A30 | CNPH*2417A** | OVMAAB036098 | 22,600 | 11.5 | 14.0 | 23,400 | 3.72 | 8.5 | 14,600 | 2.58 |
| 4209712 | 25HCB324A30 | CNPH*2417A** | OVMAAB042112 | 22,400 | 11.7 | 14.5 | 23,200 | 3.70 | 8.5 | 14,400 | 2.58 |
| 3033455 | 25HCB324A30 | CNPH*2417A**+TDR | | 22,800 | 10.5 | 13.0 | 24,400 | 3.68 | 8.5 | 15,200 | 2.52 |
| 3033474 | 25HCB324A30 | CNPH*3017A** | 58CV(A,X)070−12 | 23,000 | 11.7 | 14.5 | 23,000 | 3.66 | 8.5 | 14,300 | 2.60 |
| 3033475 | 25HCB324A30 | CNPH*3017A** | 58CV(A,X)090−16 | 23,000 | 11.7 | 14.5 | 23,000 | 3.70 | 8.5 | 14,300 | 2.62 |
| 3033476 | 25HCB324A30 | CNPH*3017A** | 58CV(A,X)110−20 | 23,000 | 11.7 | 14.5 | 23,000 | 3.70 | 8.5 | 14,400 | 2.62 |
| 3033477 | 25HCB324A30 | CNPH*3017A** | 58CV(A,X)135−22 | 23,200 | 11.7 | 14.5 | 23,000 | 3.70 | 8.5 | 14,400 | 2.62 |
| 3033478 | 25HCB324A30 | CNPH*3017A** | 58CV(A,X)155−22 | 23,200 | 11.7 | 14.5 | 23,000 | 3.70 | 8.5 | 14,300 | 2.64 |
| 3684933 | 25HCB324A30 | CNPH*3017A** | 58HDV040−−12 | 23,200 | 11.5 | 14.0 | 23,200 | 3.74 | 8.5 | 14,700 | 2.62 |
| 3684934 | 25HCB324A30 | CNPH*3017A** | 58HDV060−−12 | 23,400 | 11.5 | 14.0 | 23,200 | 3.78 | 8.5 | 14,800 | 2.66 |
| 3684935 | 25HCB324A30 | CNPH*3017A** | 58HDV100−−20 | 23,600 | 12.0 | 14.5 | 23,000 | 3.86 | 8.5 | 14,700 | 2.70 |
| 3618337 | 25HCB324A30 | CNPH*3017A** | 58ME(B,C)040−12 | 23,400 | 12.0 | 14.5 | 22,600 | 3.82 | 8.6 | 14,500 | 2.70 |
| 3121386 | 25HCB324A30 | CNPH*3017A** | 58ME(B,C)060−12 | 23,400 | 12.0 | 14.5 | 22,600 | 3.82 | 8.5 | 14,600 | 2.70 |
| 3121387 | 25HCB324A30 | CNPH*3017A** | 58ME(B,C)080−12 | 23,200 | 12.0 | 14.5 | 22,600 | 3.80 | 8.5 | 14,500 | 2.68 |
| 3121385 | 25HCB324A30 | CNPH*3017A** | 58MEB040−12 | 23,400 | 12.0 | 14.5 | 22,600 | 3.82 | 8.6 | 14,500 | 2.70 |
| 3033469 | 25HCB324A30 | CNPH*3017A** | 58MV(B,C)060−14 | 23,000 | 11.7 | 14.5 | 23,000 | 3.68 | 8.5 | 14,300 | 2.62 |
| 3033470 | 25HCB324A30 | CNPH*3017A** | 58MV(B,C)080−14 | 23,000 | 11.7 | 14.5 | 23,000 | 3.68 | 8.7 | 14,400 | 2.62 |
| 3033471 | 25HCB324A30 | CNPH*3017A** | 58MV(B,C)080−20 | 23,000 | 11.7 | 14.5 | 23,000 | 3.68 | 8.5 | 14,400 | 2.62 |
| 3033472 | 25HCB324A30 | CNPH*3017A** | 58MV(B,C)100−20 | 23,200 | 11.7 | 14.5 | 23,000 | 3.70 | 8.5 | 14,400 | 2.62 |
| 3033473 | 25HCB324A30 | CNPH*3017A** | 58MV(B,C)120−20 | 23,000 | 11.7 | 14.5 | 23,000 | 3.66 | 8.5 | 14,300 | 2.60 |
| 3033432 | 25HCB324A30 | CNPH*3017A** | 58PH*045−08 | 23,200 | 11.5 | 14.5 | 23,000 | 3.72 | 8.6 | 14,500 | 2.64 |
| 3684955 | 25HCB324A30 | CNPH*3017A** | 58VLR105−12 | 23,200 | 12.0 | 14.5 | 23,200 | 3.78 | 8.5 | 14,400 | 2.66 |
| 3684954 | 25HCB324A30 | CNPH*3017A** | 58VMR105−12 | 22,800 | 12.0 | 14.5 | 23,000 | 3.70 | 8.4 | 14,300 | 2.60 |
| 4807806 | 25HCB324A30 | CNPH*3017A** | 59*N*A060V17**14 | 22,800 | 12.0 | 14.5 | 23,200 | 3.64 | 8.2 | 14,400 | 2.56 |
| 4807807 | 25HCB324A30 | CNPH*3017A** | 59*N*A080V17**14 | 22,800 | 12.0 | 14.5 | 23,000 | 3.62 | 8.2 | 14,300 | 2.56 |
| 4807808 | 25HCB324A30 | CNPH*3017A** | 59*N*A100V21**20 | 23,000 | 12.0 | 14.5 | 23,200 | 3.72 | 8.5 | 14,500 | 2.60 |
| 4807809 | 25HCB324A30 | CNPH*3017A** | 59*N*A120V24**22 | 23,000 | 12.0 | 14.5 | 23,000 | 3.70 | 8.5 | 14,400 | 2.60 |
| 4807810 | 25HCB324A30 | CNPH*3017A** | 59*P5A040E14**10 | 23,000 | 11.0 | 13.3 | 23,400 | 3.60 | 8.2 | 15,000 | 2.52 |
| 4807811 | 25HCB324A30 | CNPH*3017A** | 59*P5A060E17**14 | 23,000 | 12.0 | 14.5 | 23,200 | 3.68 | 8.2 | 14,400 | 2.58 |
| 4209714 | 25HCB324A30 | CNPH*3017A** | OVLAAB036098 | 22,800 | 12.0 | 14.5 | 23,000 | 3.74 | 8.5 | 14,400 | 2.60 |
| 4209713 | 25HCB324A30 | CNPH*3017A** | OVMAAB036098 | 22,800 | 12.0 | 14.5 | 23,000 | 3.72 | 8.5 | 14,500 | 2.60 |
| 4209715 | 25HCB324A30 | CNPH*3017A** | OVMAAB042112 | 22,800 | 12.0 | 15.0 | 22,800 | 3.72 | 8.5 | 14,300 | 2.60 |
| 3033467 | 25HCB324A30 | CNPH*3017A**+TDR | | 23,000 | 10.6 | 13.0 | 23,400 | 3.56 | 8.3 | 15,200 | 2.52 |
| 4807812 | 25HCB324A30 | CNPH*3117A** | 59*N*A060V17**14 | 23,200 | 12.0 | 14.5 | 22,600 | 3.74 | 8.5 | 14,500 | 2.62 |
| 4807813 | 25HCB324A30 | CNPH*3117A** | 59*N*A080V17**14 | 23,200 | 12.0 | 14.5 | 22,600 | 3.72 | 8.5 | 14,400 | 2.60 |
| 4807814 | 25HCB324A30 | CNPH*3117A** | 59*N*A100V21**20 | 23,600 | 12.0 | 14.5 | 22,400 | 3.80 | 8.5 | 14,500 | 2.66 |
| 4807815 | 25HCB324A30 | CNPH*3117A** | 59*N*A120V24**22 | 23,400 | 12.4 | 15.0 | 22,400 | 3.80 | 8.5 | 14,500 | 2.66 |
| 4807816 | 25HCB324A30 | CNPH*3117A** | 59*P5A040E14**10 | 23,600 | 11.4 | 13.7 | 22,600 | 3.66 | 8.5 | 15,100 | 2.58 |
| 4807817 | 25HCB324A30 | CNPH*3117A** | 59*P5A060E17**14 | 23,400 | 12.0 | 14.5 | 22,400 | 3.78 | 8.5 | 14,500 | 2.64 |
| 3033446 | 25HCB324A30 | CNPV*2414A** | 58CV(A,X)070−12 | 22,600 | 11.5 | 14.0 | 23,400 | 3.68 | 8.4 | 14,400 | 2.58 |
| 3033429 | 25HCB324A30 | CNPV*2414A** | 58PH*045−08 | 22,800 | 11.5 | 14.0 | 23,800 | 3.72 | 8.5 | 14,500 | 2.60 |
| 4807786 | 25HCB324A30 | CNPV*2414A** | 59*P5A040E14**10 | 22,600 | 11.0 | 13.0 | 24,200 | 3.64 | 8.2 | 15,000 | 2.50 |
| 3033445 | 25HCB324A30 | CNPV*2414A**+TDR | | 22,800 | 10.5 | 13.0 | 24,400 | 3.68 | 8.5 | 15,200 | 2.52 |
| 3033449 | 25HCB324A30 | CNPV*2417A** | 58CV(A,X)090−16 | 22,800 | 11.5 | 14.5 | 23,400 | 3.72 | 8.5 | 14,400 | 2.62 |
| 4209722 | 25HCB324A30 | CNPV*2417A** | 58HDV040−−12 | 22,400 | 11.5 | 14.0 | 23,600 | 3.68 | 8.4 | 14,600 | 2.56 |
| 4209723 | 25HCB324A30 | CNPV*2417A** | 58HDV060−−12 | 22,600 | 11.5 | 14.0 | 23,600 | 3.74 | 8.5 | 14,700 | 2.58 |
| 3618349 | 25HCB324A30 | CNPV*2417A** | 58ME(B,C)040−12 | 22,800 | 11.5 | 14.5 | 23,600 | 3.82 | 8.5 | 14,500 | 2.64 |
| 3121377 | 25HCB324A30 | CNPV*2417A** | 58ME(B,C)060−12 | 22,800 | 11.5 | 14.5 | 23,600 | 3.84 | 8.5 | 14,500 | 2.66 |
| 3121378 | 25HCB324A30 | CNPV*2417A** | 58ME(B,C)080−12 | 22,800 | 11.5 | 14.5 | 22,600 | 3.80 | 8.5 | 14,500 | 2.64 |
| 3121376 | 25HCB324A30 | CNPV*2417A** | 58MEB040−12 | 22,800 | 11.5 | 14.5 | 23,600 | 3.82 | 8.5 | 14,500 | 2.64 |
| 3033448 | 25HCB324A30 | CNPV*2417A** | 58MV(B,C)060−14 | 22,800 | 11.5 | 14.0 | 23,400 | 3.70 | 8.5 | 14,400 | 2.60 |
| 3758723 | 25HCB324A30 | CNPV*2417A** | 58UVB060−14 | 22,800 | 11.5 | 14.0 | 23,400 | 3.70 | 8.5 | 14,400 | 2.60 |
| 3684949 | 25HCB324A30 | CNPV*2417A** | 58VLR105−12 | 22,800 | 11.5 | 14.0 | 23,600 | 3.78 | 8.5 | 14,500 | 2.64 |
| 3684948 | 25HCB324A30 | CNPV*2417A** | 58VMR105−12 | 22,600 | 11.5 | 14.0 | 23,400 | 3.66 | 8.3 | 14,400 | 2.58 |

See notes on pg. 35

# COMBINATION RATINGS CONTINUED

| AHRI Ref. No. | Model Number | Coil Model Number | Furnace Model Number | Cooling Capacity | EER | SEER | High Temp | | HSPF | Low Temp | |
|---|---|---|---|---|---|---|---|---|---|---|---|
| | | | | | | | E Capacity | E COP | | H Capacity | H COP |
| 4807787 | 25HCB324A30 | CNPV*2417A** | 59*N*A060V17**14 | 22,600 | 11.5 | 14.0 | 23,400 | 3.62 | 8.2 | 14,400 | 2.54 |
| 4807788 | 25HCB324A30 | CNPV*2417A** | 59*N*A080V17**14 | 22,400 | 11.8 | 14.2 | 23,400 | 3.60 | 8.2 | 14,300 | 2.54 |
| 4807789 | 25HCB324A30 | CNPV*2417A** | 59*P5A040E14**10 | 22,600 | 11.0 | 13.0 | 24,200 | 3.64 | 8.2 | 15,000 | 2.50 |
| 4807790 | 25HCB324A30 | CNPV*2417A** | 59*P5A060E17**14 | 22,400 | 11.8 | 14.2 | 23,400 | 3.60 | 8.2 | 14,300 | 2.54 |
| 4209705 | 25HCB324A30 | CNPV*2417A** | OVLAAB036098 | 22,600 | 11.5 | 14.5 | 23,400 | 3.72 | 8.5 | 14,500 | 2.58 |
| 4209704 | 25HCB324A30 | CNPV*2417A** | OVMAAB036098 | 22,600 | 11.5 | 14.0 | 23,400 | 3.72 | 8.5 | 14,600 | 2.58 |
| 4209706 | 25HCB324A30 | CNPV*2417A** | OVMAAB042112 | 22,400 | 11.7 | 14.5 | 23,200 | 3.70 | 8.5 | 14,400 | 2.58 |
| 3033447 | 25HCB324A30 | CNPV*2417A**+TDR | | 22,800 | 10.5 | 13.0 | 24,400 | 3.68 | 8.5 | 15,200 | 2.52 |
| 3033451 | 25HCB324A30 | CNPV*3014A** | 58CV(A,X)070–12 | 23,000 | 11.7 | 14.5 | 23,000 | 3.66 | 8.4 | 14,400 | 2.60 |
| 3033430 | 25HCB324A30 | CNPV*3014A** | 58PH*045–08 | 23,200 | 11.5 | 14.5 | 23,000 | 3.68 | 8.5 | 14,500 | 2.62 |
| 4807791 | 25HCB324A30 | CNPV*3014A** | 59*P5A040E14**10 | 22,800 | 11.0 | 13.3 | 23,600 | 3.58 | 8.2 | 15,000 | 2.50 |
| 3033450 | 25HCB324A30 | CNPV*3014A**+TDR | | 23,000 | 10.6 | 13.0 | 23,400 | 3.56 | 8.3 | 15,200 | 2.52 |
| 3033454 | 25HCB324A30 | CNPV*3017A** | 58CV(A,X)090–16 | 23,000 | 11.7 | 14.5 | 23,000 | 3.70 | 8.5 | 14,300 | 2.62 |
| 4209724 | 25HCB324A30 | CNPV*3017A** | 58HDV040––12 | 22,800 | 11.5 | 14.5 | 23,000 | 3.72 | 8.5 | 14,600 | 2.60 |
| 4209725 | 25HCB324A30 | CNPV*3017A** | 58HDV060––12 | 23,200 | 11.5 | 14.5 | 23,000 | 3.76 | 8.5 | 14,700 | 2.62 |
| 3618335 | 25HCB324A30 | CNPV*3017A** | 58ME(B,C)040–12 | 23,400 | 12.0 | 14.5 | 22,600 | 3.82 | 8.6 | 14,500 | 2.70 |
| 3121380 | 25HCB324A30 | CNPV*3017A** | 58ME(B,C)060–12 | 23,400 | 12.0 | 14.5 | 22,600 | 3.82 | 8.5 | 14,600 | 2.70 |
| 3121381 | 25HCB324A30 | CNPV*3017A** | 58ME(B,C)080–12 | 23,200 | 12.0 | 14.5 | 22,600 | 3.80 | 8.5 | 14,500 | 2.68 |
| 3121379 | 25HCB324A30 | CNPV*3017A** | 58MEB040–12 | 23,400 | 12.0 | 14.5 | 22,600 | 3.82 | 8.6 | 14,500 | 2.70 |
| 3033453 | 25HCB324A30 | CNPV*3017A** | 58MV(B,C)060–14 | 23,000 | 11.7 | 14.5 | 23,000 | 3.68 | 8.5 | 14,300 | 2.62 |
| 3758724 | 25HCB324A30 | CNPV*3017A** | 58UVB060–14 | 23,000 | 11.7 | 14.5 | 23,000 | 3.68 | 8.5 | 14,300 | 2.62 |
| 3684951 | 25HCB324A30 | CNPV*3017A** | 58VLR105–12 | 23,200 | 12.0 | 14.5 | 23,200 | 3.78 | 8.5 | 14,400 | 2.66 |
| 3684950 | 25HCB324A30 | CNPV*3017A** | 58VMR105–12 | 22,800 | 12.0 | 14.5 | 23,000 | 3.70 | 8.4 | 14,300 | 2.60 |
| 4807792 | 25HCB324A30 | CNPV*3017A** | 59*N*A060V17**14 | 22,800 | 12.0 | 14.5 | 23,200 | 3.64 | 8.2 | 14,400 | 2.56 |
| 4807793 | 25HCB324A30 | CNPV*3017A** | 59*N*A080V17**14 | 22,800 | 12.0 | 14.5 | 23,000 | 3.62 | 8.2 | 14,300 | 2.56 |
| 4807794 | 25HCB324A30 | CNPV*3017A** | 59*P5A040E14**10 | 23,000 | 11.0 | 13.3 | 23,400 | 3.60 | 8.2 | 15,000 | 2.52 |
| 4807795 | 25HCB324A30 | CNPV*3017A** | 59*P5A060E17**14 | 23,000 | 12.0 | 14.5 | 23,200 | 3.68 | 8.2 | 14,400 | 2.58 |
| 4209708 | 25HCB324A30 | CNPV*3017A** | OVLAAB036098 | 22,800 | 12.0 | 14.5 | 23,000 | 3.74 | 8.5 | 14,400 | 2.60 |
| 4209707 | 25HCB324A30 | CNPV*3017A** | OVMAAB036098 | 22,800 | 12.0 | 14.5 | 23,000 | 3.72 | 8.5 | 14,500 | 2.60 |
| 4209709 | 25HCB324A30 | CNPV*3017A** | OVMAAB042112 | 22,800 | 12.0 | 15.0 | 22,800 | 3.72 | 8.5 | 14,300 | 2.60 |
| 3033452 | 25HCB324A30 | CNPV*3017A**+TDR | | 23,000 | 10.6 | 13.0 | 23,400 | 3.56 | 8.3 | 15,200 | 2.52 |
| 4807796 | 25HCB324A30 | CNPV*3117A** | 59*N*A060V17**14 | 23,200 | 12.0 | 14.5 | 22,600 | 3.74 | 8.5 | 14,500 | 2.62 |
| 4807797 | 25HCB324A30 | CNPV*3117A** | 59*N*A080V17**14 | 23,200 | 12.0 | 14.5 | 22,600 | 3.72 | 8.5 | 14,400 | 2.60 |
| 4807798 | 25HCB324A30 | CNPV*3117A** | 59*P5A040E14**10 | 23,400 | 11.4 | 13.7 | 22,600 | 3.66 | 8.5 | 15,100 | 2.56 |
| 4807799 | 25HCB324A30 | CNPV*3117A** | 59*P5A060E17**14 | 23,400 | 12.0 | 14.5 | 22,400 | 3.78 | 8.5 | 14,500 | 2.64 |
| 3033487 | 25HCB324A30 | CSPH*2412A** | 58CV(A,X)070–12 | 22,800 | 11.6 | 14.5 | 23,400 | 3.70 | 8.5 | 14,400 | 2.60 |
| 3033488 | 25HCB324A30 | CSPH*2412A** | 58CV(A,X)090–16 | 22,800 | 11.7 | 14.5 | 23,400 | 3.74 | 8.6 | 14,400 | 2.62 |
| 3033489 | 25HCB324A30 | CSPH*2412A** | 58CV(A,X)110–20 | 22,800 | 11.5 | 14.0 | 23,400 | 3.72 | 8.5 | 14,500 | 2.60 |
| 3033490 | 25HCB324A30 | CSPH*2412A** | 58CV(A,X)135–22 | 22,800 | 11.7 | 14.5 | 23,400 | 3.74 | 8.6 | 14,500 | 2.60 |
| 3033491 | 25HCB324A30 | CSPH*2412A** | 58CV(A,X)155–22 | 22,800 | 11.7 | 14.5 | 23,400 | 3.74 | 8.6 | 14,400 | 2.62 |
| 3684936 | 25HCB324A30 | CSPH*2412A** | 58HDV040––12 | 23,000 | 11.2 | 13.5 | 23,800 | 3.72 | 8.4 | 14,700 | 2.58 |
| 3684937 | 25HCB324A30 | CSPH*2412A** | 58HDV060––12 | 23,000 | 11.2 | 13.5 | 23,800 | 3.78 | 8.5 | 14,700 | 2.60 |
| 3684938 | 25HCB324A30 | CSPH*2412A** | 58HDV080––20 | 23,400 | 11.5 | 14.0 | 23,800 | 3.90 | 8.5 | 14,800 | 2.66 |
| 3684939 | 25HCB324A30 | CSPH*2412A** | 58HDV100––20 | 23,200 | 11.5 | 14.0 | 23,800 | 3.86 | 8.5 | 14,700 | 2.66 |
| 3618338 | 25HCB324A30 | CSPH*2412A** | 58ME(B,C)040–12 | 23,000 | 12.0 | 14.5 | 23,400 | 3.82 | 8.6 | 14,500 | 2.64 |
| 3121389 | 25HCB324A30 | CSPH*2412A** | 58ME(B,C)060–12 | 23,200 | 11.5 | 14.5 | 23,400 | 3.84 | 8.5 | 14,500 | 2.66 |
| 3121390 | 25HCB324A30 | CSPH*2412A** | 58ME(B,C)080–12 | 23,000 | 11.5 | 14.5 | 23,400 | 3.80 | 8.5 | 14,500 | 2.64 |
| 3121388 | 25HCB324A30 | CSPH*2412A** | 58MEB040–12 | 23,000 | 12.0 | 14.5 | 23,400 | 3.82 | 8.6 | 14,500 | 2.64 |
| 3033482 | 25HCB324A30 | CSPH*2412A** | 58MV(B,C)060–14 | 22,800 | 11.7 | 14.5 | 23,400 | 3.72 | 8.5 | 14,400 | 2.60 |
| 3033483 | 25HCB324A30 | CSPH*2412A** | 58MV(B,C)080–14 | 22,800 | 11.5 | 14.0 | 23,400 | 3.74 | 8.5 | 14,500 | 2.60 |
| 3033484 | 25HCB324A30 | CSPH*2412A** | 58MV(B,C)080–20 | 22,800 | 11.6 | 14.5 | 23,400 | 3.72 | 8.5 | 14,400 | 2.60 |
| 3033485 | 25HCB324A30 | CSPH*2412A** | 58MV(B,C)100–20 | 22,800 | 11.7 | 14.5 | 23,400 | 3.74 | 8.6 | 14,500 | 2.62 |
| 3033486 | 25HCB324A30 | CSPH*2412A** | 58MV(B,C)120–20 | 22,800 | 11.5 | 14.0 | 23,400 | 3.70 | 8.5 | 14,400 | 2.58 |
| 3033433 | 25HCB324A30 | CSPH*2412A** | 58PH*045–08 | 23,000 | 11.5 | 14.0 | 23,600 | 3.74 | 8.5 | 14,500 | 2.60 |
| 3684957 | 25HCB324A30 | CSPH*2412A** | 58VLR105–12 | 23,200 | 11.5 | 14.0 | 23,600 | 3.80 | 8.5 | 14,500 | 2.64 |
| 3684956 | 25HCB324A30 | CSPH*2412A** | 58VMR105–12 | 22,800 | 11.5 | 14.0 | 23,200 | 3.68 | 8.3 | 14,400 | 2.58 |
| 4807818 | 25HCB324A30 | CSPH*2412A** | 59*N*A060V17**14 | 22,800 | 11.8 | 14.2 | 23,400 | 3.66 | 8.2 | 14,500 | 2.54 |
| 4807819 | 25HCB324A30 | CSPH*2412A** | 59*N*A080V17**14 | 22,800 | 11.8 | 14.2 | 23,400 | 3.62 | 8.2 | 14,300 | 2.54 |
| 4807820 | 25HCB324A30 | CSPH*2412A** | 59*N*A100V21**20 | 23,000 | 11.8 | 14.2 | 23,600 | 3.76 | 8.5 | 14,500 | 2.58 |
| 4807821 | 25HCB324A30 | CSPH*2412A** | 59*N*A120V24**22 | 23,000 | 12.0 | 14.5 | 23,600 | 3.72 | 8.5 | 14,500 | 2.58 |
| 4807822 | 25HCB324A30 | CSPH*2412A** | 59*P5A040E14**10 | 22,800 | 11.0 | 13.3 | 24,000 | 3.64 | 8.2 | 15,000 | 2.50 |
| 4807823 | 25HCB324A30 | CSPH*2412A** | 59*P5A060E17**14 | 22,600 | 11.8 | 14.2 | 23,200 | 3.60 | 8.2 | 14,300 | 2.54 |
| 4209717 | 25HCB324A30 | CSPH*2412A** | OVLAAB036098 | 22,800 | 11.5 | 14.5 | 23,400 | 3.76 | 8.5 | 14,600 | 2.58 |
| 4209716 | 25HCB324A30 | CSPH*2412A** | OVMAAB036098 | 22,800 | 11.5 | 14.5 | 23,400 | 3.76 | 8.5 | 14,600 | 2.58 |
| 4209718 | 25HCB324A30 | CSPH*2412A** | OVMAAB042112 | 22,800 | 12.0 | 14.5 | 23,200 | 3.72 | 8.5 | 14,400 | 2.60 |
| 3033480 | 25HCB324A30 | CSPH*2412A**+TDR | | 22,800 | 10.6 | 13.0 | 24,200 | 3.68 | 8.5 | 15,200 | 2.54 |
| 3033499 | 25HCB324A30 | CSPH*3012A** | 58CV(A,X)070–12 | 23,000 | 11.7 | 14.5 | 22,800 | 3.64 | 8.4 | 14,400 | 2.60 |
| 3033500 | 25HCB324A30 | CSPH*3012A** | 58CV(A,X)090–16 | 23,000 | 11.7 | 14.5 | 22,800 | 3.68 | 8.5 | 14,400 | 2.62 |
| 3033501 | 25HCB324A30 | CSPH*3012A** | 58CV(A,X)110–20 | 23,000 | 11.7 | 14.5 | 22,800 | 3.68 | 8.5 | 14,400 | 2.62 |
| 3033502 | 25HCB324A30 | CSPH*3012A** | 58CV(A,X)135–22 | 23,000 | 11.7 | 14.5 | 22,800 | 3.68 | 8.5 | 14,400 | 2.62 |
| 3033503 | 25HCB324A30 | CSPH*3012A** | 58CV(A,X)155–22 | 23,000 | 11.7 | 14.5 | 22,800 | 3.68 | 8.5 | 14,400 | 2.62 |
| 3684940 | 25HCB324A30 | CSPH*3012A** | 58HDV040––12 | 23,200 | 11.5 | 14.0 | 23,000 | 3.72 | 8.4 | 14,700 | 2.62 |
| 3684941 | 25HCB324A30 | CSPH*3012A** | 58HDV060––12 | 23,400 | 11.5 | 14.0 | 23,000 | 3.76 | 8.4 | 14,800 | 2.64 |
| 3684942 | 25HCB324A30 | CSPH*3012A** | 58HDV080––20 | 23,800 | 11.5 | 14.0 | 22,800 | 3.84 | 8.4 | 14,900 | 2.70 |
| 3684943 | 25HCB324A30 | CSPH*3012A** | 58HDV100––20 | 23,600 | 11.5 | 14.0 | 22,800 | 3.84 | 8.4 | 14,700 | 2.70 |
| 3618341 | 25HCB324A30 | CSPH*3012A** | 58ME(B,C)040–12 | 23,400 | 12.0 | 14.5 | 22,600 | 3.78 | 8.6 | 14,500 | 2.68 |
| 3121392 | 25HCB324A30 | CSPH*3012A** | 58ME(B,C)060–12 | 23,400 | 12.0 | 14.5 | 22,600 | 3.80 | 8.5 | 14,500 | 2.70 |
| 3121393 | 25HCB324A30 | CSPH*3012A** | 58ME(B,C)080–12 | 23,200 | 12.0 | 14.5 | 22,600 | 3.76 | 8.6 | 14,500 | 2.66 |
| 3121391 | 25HCB324A30 | CSPH*3012A** | 58MEB040–12 | 23,400 | 12.0 | 14.5 | 22,600 | 3.78 | 8.6 | 14,500 | 2.68 |

See notes on pg. 35

# COMBINATION RATINGS CONTINUED

| AHRI Ref. No. | Model Number | Coil Model Number | Furnace Model Number | Cooling Capacity | EER | SEER | High Temp | | HSPF | Low Temp | |
|---|---|---|---|---|---|---|---|---|---|---|---|
| | | | | | | | E Capacity | E COP | | H Capacity | H COP |
| 3033494 | 25HCB324A30 | CSPH*3012A** | 58MV(B,C)060−14 | 23,000 | 11.7 | 14.5 | 22,800 | 3.66 | 8.5 | 14,400 | 2.60 |
| 3033495 | 25HCB324A30 | CSPH*3012A** | 58MV(B,C)080−14 | 23,000 | 11.7 | 14.5 | 22,800 | 3.66 | 8.5 | 14,400 | 2.60 |
| 3033496 | 25HCB324A30 | CSPH*3012A** | 58MV(B,C)080−20 | 23,000 | 11.7 | 14.5 | 22,800 | 3.66 | 8.5 | 14,400 | 2.60 |
| 3033497 | 25HCB324A30 | CSPH*3012A** | 58MV(B,C)100−20 | 23,000 | 11.7 | 14.5 | 22,800 | 3.68 | 8.5 | 14,400 | 2.62 |
| 3033498 | 25HCB324A30 | CSPH*3012A** | 58MV(B,C)120−20 | 23,000 | 11.7 | 14.5 | 22,800 | 3.64 | 8.4 | 14,400 | 2.60 |
| 3033434 | 25HCB324A30 | CSPH*3012A** | 58PH*045−08 | 23,400 | 12.0 | 14.5 | 23,000 | 3.70 | 8.5 | 14,500 | 2.62 |
| 3684959 | 25HCB324A30 | CSPH*3012A** | 58VLR105−12 | 23,200 | 12.0 | 14.5 | 23,000 | 3.76 | 8.5 | 14,500 | 2.64 |
| 3684958 | 25HCB324A30 | CSPH*3012A** | 58VMR105−12 | 23,000 | 11.5 | 14.0 | 23,000 | 3.68 | 8.4 | 14,400 | 2.60 |
| 4807824 | 25HCB324A30 | CSPH*3012A** | 59*N*A060V17**14 | 23,000 | 11.8 | 14.2 | 23,400 | 3.70 | 8.2 | 14,400 | 2.56 |
| 4807825 | 25HCB324A30 | CSPH*3012A** | 59*N*A080V17**14 | 22,800 | 12.0 | 14.5 | 23,200 | 3.68 | 8.2 | 14,300 | 2.56 |
| 4807826 | 25HCB324A30 | CSPH*3012A** | 59*N*A100V21**20 | 23,200 | 12.0 | 14.5 | 23,400 | 3.80 | 8.5 | 14,500 | 2.60 |
| 4807827 | 25HCB324A30 | CSPH*3012A** | 59*N*A120V24**22 | 23,000 | 12.0 | 14.5 | 23,400 | 3.78 | 8.5 | 14,400 | 2.60 |
| 4807828 | 25HCB324A30 | CSPH*3012A** | 59*P5A040E14**10 | 23,000 | 11.2 | 13.5 | 23,800 | 3.70 | 8.5 | 15,000 | 2.52 |
| 4807829 | 25HCB324A30 | CSPH*3012A** | 59*P5A060E17**14 | 23,000 | 12.0 | 14.5 | 23,400 | 3.72 | 8.5 | 14,400 | 2.58 |
| 4209720 | 25HCB324A30 | CSPH*3012A** | OVLAAB036098 | 23,000 | 12.0 | 14.5 | 23,200 | 3.80 | 8.5 | 14,500 | 2.62 |
| 4209719 | 25HCB324A30 | CSPH*3012A** | OVMAAB036098 | 23,000 | 12.0 | 14.5 | 23,400 | 3.80 | 8.5 | 14,600 | 2.60 |
| 4209721 | 25HCB324A30 | CSPH*3012A** | OVMAAB042112 | 22,800 | 12.0 | 15.0 | 23,200 | 3.78 | 8.5 | 14,400 | 2.62 |
| 3033492 | 25HCB324A30 | CSPH*3012A**+TDR | | 23,000 | 10.6 | 13.0 | 23,200 | 3.56 | 8.3 | 15,200 | 2.52 |
| 3853213 | 25HCB324A30 | FB4CNF024 | | 22,400 | 11.0 | 13.0 | 23,000 | 3.60 | 8.0 | 14,600 | 2.52 |
| 3684965 | 25HCB324A30 | FB4CNF024+TXV | | 22,600 | 11.2 | 13.5 | 23,800 | 3.62 | 8.2 | 14,600 | 2.56 |
| 3853214 | 25HCB324A30 | FB4CNF030 | | 23,000 | 11.0 | 13.0 | 23,000 | 3.78 | 8.0 | 14,600 | 2.62 |
| 3684966 | 25HCB324A30 | FB4CNF030+TXV | | 23,400 | 11.5 | 14.5 | 23,800 | 3.84 | 8.5 | 14,600 | 2.66 |
| 3033512 | 25HCB324A30 | FE4AN(B,F)003+UI | | 23,400 | 12.0 | 15.0 | 23,000 | 3.76 | 8.5 | 14,200 | 2.66 |
| 3033511 | 25HCB324A30 | FE4ANF002+UI | | 23,200 | 11.7 | 14.5 | 23,200 | 3.78 | 8.5 | 14,300 | 2.64 |
| 3033510 | 25HCB324A30 | FF1ENP024 | | 22,800 | 10.7 | 13.0 | 24,000 | 3.54 | 8.2 | 15,200 | 2.46 |
| 3463945 | 25HCB324A30 | FF1ENP025 | | 22,600 | 11.5 | 14.0 | 23,600 | 3.62 | 8.2 | 14,400 | 2.56 |
| 3033507 | 25HCB324A30 | FF1ENP030 | | 22,800 | 10.4 | 13.0 | 24,200 | 3.56 | 8.0 | 15,100 | 2.48 |
| 3463946 | 25HCB324A30 | FF1ENP031 | | 22,800 | 11.5 | 14.5 | 23,400 | 3.68 | 8.4 | 14,400 | 2.60 |
| 3405751 | 25HCB324A30 | FV4CN(B,F)003 | | 23,400 | 12.0 | 14.5 | 23,000 | 3.78 | 8.5 | 14,300 | 2.66 |
| 3405750 | 25HCB324A30 | FV4CNF002 | | 23,200 | 11.7 | 14.5 | 23,200 | 3.80 | 8.5 | 14,400 | 2.66 |
| 3684963 | 25HCB324A30 | FX4DN(B,F)031 | | 23,400 | 11.5 | 14.0 | 23,400 | 3.80 | 8.5 | 14,800 | 2.64 |
| 3684962 | 25HCB324A30 | FX4DNF025 | | 23,400 | 11.5 | 14.5 | 23,800 | 3.84 | 8.5 | 14,600 | 2.66 |
| 3684967 | 25HCB324A30 | FY5BNF024+TXV | | 23,200 | 11.2 | 13.5 | 23,800 | 3.68 | 8.3 | 14,800 | 2.58 |
| 3853215 | 25HCB324A30 | FY5BNF030 | | 23,000 | 11.0 | 13.0 | 23,000 | 3.70 | 8.0 | 14,900 | 2.56 |
| 3684968 | 25HCB324A30 | FY5BNF030+TXV | | 23,400 | 11.2 | 13.5 | 23,600 | 3.72 | 8.4 | 15,000 | 2.58 |
| | | | | | | | | | | | |
| 3819231 | 25HCB330A30 | †FB4CNF030 | | 30,000 | 11.0 | 13.0 | 30,000 | 3.58 | 8.0 | 18,300 | 2.44 |
| 3033529 | 25HCB330A30 | CAP**3014A** | 58CV(A,X)070−12 | 30,000 | 11.5 | 14.0 | 30,000 | 3.44 | 8.0 | 18,000 | 2.42 |
| 3033528 | 25HCB330A30 | CAP**3014A**+TDR | | 30,000 | 10.8 | 13.0 | 30,000 | 3.46 | 8.0 | 18,800 | 2.38 |
| 3033532 | 25HCB330A30 | CAP**3017A** | 58CV(A,X)090−16 | 30,000 | 11.5 | 14.0 | 29,800 | 3.46 | 8.0 | 17,800 | 2.44 |
| 3618350 | 25HCB330A30 | CAP**3017A** | 58ME(B,C)040−12 | 30,000 | 11.5 | 14.0 | 29,800 | 3.58 | 8.1 | 18,000 | 2.48 |
| 3121395 | 25HCB330A30 | CAP**3017A** | 58ME(B,C)060−12 | 30,000 | 11.5 | 14.0 | 30,000 | 3.60 | 8.2 | 18,100 | 2.48 |
| 3121396 | 25HCB330A30 | CAP**3017A** | 58ME(B,C)080−12 | 30,000 | 11.5 | 14.0 | 29,800 | 3.56 | 8.1 | 18,000 | 2.48 |
| 3121397 | 25HCB330A30 | CAP**3017A** | 58ME(B,C)080−16 | 30,000 | 11.5 | 14.0 | 30,000 | 3.62 | 8.2 | 18,200 | 2.50 |
| 3121394 | 25HCB330A30 | CAP**3017A** | 58MEB040−12 | 30,000 | 11.5 | 14.0 | 29,800 | 3.58 | 8.1 | 18,000 | 2.48 |
| 3033531 | 25HCB330A30 | CAP**3017A** | 58MV(B,C)060−14 | 30,000 | 11.5 | 14.0 | 29,800 | 3.44 | 8.0 | 17,900 | 2.42 |
| 3033514 | 25HCB330A30 | CAP**3017A** | 58PH*070−16 | 30,000 | 11.0 | 14.0 | 30,000 | 3.50 | 8.0 | 18,100 | 2.44 |
| 3757410 | 25HCB330A30 | CAP**3017A** | 58UVB060−14 | 30,000 | 11.5 | 14.0 | 29,800 | 3.44 | 8.0 | 17,900 | 2.42 |
| 3684988 | 25HCB330A30 | CAP**3017A** | 58VLR105−12 | 30,000 | 11.5 | 14.0 | 29,800 | 3.52 | 8.0 | 18,000 | 2.46 |
| 3684987 | 25HCB330A30 | CAP**3017A** | 58VMR105−12 | 29,600 | 11.5 | 14.0 | 29,400 | 3.40 | 7.9 | 17,800 | 2.40 |
| 4807830 | 25HCB330A30 | CAP**3017A** | 59*N*A060V17**14 | 29,600 | 11.6 | 14.2 | 30,000 | 3.44 | 7.8 | 18,000 | 2.40 |
| 4807831 | 25HCB330A30 | CAP**3017A** | 59*N*A080V17**14 | 29,800 | 11.7 | 14.2 | 30,000 | 3.48 | 8.0 | 18,000 | 2.42 |
| 4807832 | 25HCB330A30 | CAP**3017A** | 59*P5A060E17**14 | 30,000 | 11.6 | 14.2 | 30,200 | 3.50 | 8.0 | 18,100 | 2.42 |
| 4807833 | 25HCB330A30 | CAP**3017A** | 59*P5A080E17**16 | 30,200 | 11.7 | 14.2 | 30,400 | 3.58 | 8.2 | 18,200 | 2.46 |
| 4209727 | 25HCB330A30 | CAP**3017A** | OVLAAB036098 | 29,800 | 11.5 | 14.0 | 29,800 | 3.48 | 8.0 | 18,000 | 2.42 |
| 4209726 | 25HCB330A30 | CAP**3017A** | OVMAAB036098 | 29,800 | 11.2 | 13.5 | 30,000 | 3.48 | 8.0 | 18,100 | 2.42 |
| 4209728 | 25HCB330A30 | CAP**3017A** | OVMAAB042112 | 30,000 | 11.5 | 14.5 | 29,800 | 3.52 | 8.2 | 17,900 | 2.46 |
| 3033530 | 25HCB330A30 | CAP**3017A**+TDR | | 30,000 | 10.8 | 13.0 | 30,000 | 3.46 | 8.0 | 18,800 | 2.38 |
| 3033534 | 25HCB330A30 | CAP**3614A** | 58CV(A,X)070−12 | 30,000 | 11.5 | 14.0 | 30,000 | 3.46 | 8.0 | 18,000 | 2.42 |
| 3033533 | 25HCB330A30 | CAP**3614A**+TDR | | 30,000 | 10.8 | 13.0 | 30,000 | 3.50 | 8.0 | 18,800 | 2.40 |
| 3033537 | 25HCB330A30 | CAP**3617A** | 58CV(A,X)090−16 | 30,000 | 11.5 | 14.0 | 29,800 | 3.50 | 8.0 | 17,800 | 2.46 |
| 3618351 | 25HCB330A30 | CAP**3617A** | 58ME(B,C)040−12 | 30,000 | 11.5 | 14.0 | 30,000 | 3.62 | 8.2 | 18,000 | 2.50 |
| 3121399 | 25HCB330A30 | CAP**3617A** | 58ME(B,C)060−12 | 30,000 | 11.5 | 14.0 | 30,000 | 3.62 | 8.2 | 18,100 | 2.50 |
| 3121400 | 25HCB330A30 | CAP**3617A** | 58ME(B,C)080−12 | 30,000 | 11.5 | 14.5 | 30,000 | 3.60 | 8.2 | 18,000 | 2.50 |
| 3121401 | 25HCB330A30 | CAP**3617A** | 58ME(B,C)080−16 | 30,000 | 11.5 | 14.0 | 30,000 | 3.66 | 8.3 | 18,200 | 2.50 |
| 3121398 | 25HCB330A30 | CAP**3617A** | 58MEB040−12 | 30,000 | 11.5 | 14.0 | 30,000 | 3.62 | 8.2 | 18,000 | 2.50 |
| 3033536 | 25HCB330A30 | CAP**3617A** | 58MV(B,C)060−14 | 30,000 | 11.5 | 14.0 | 29,800 | 3.46 | 8.0 | 17,900 | 2.44 |
| 3033515 | 25HCB330A30 | CAP**3617A** | 58PH*070−16 | 30,000 | 11.0 | 14.0 | 30,000 | 3.54 | 8.2 | 18,200 | 2.46 |
| 3757411 | 25HCB330A30 | CAP**3617A** | 58UVB060−14 | 30,000 | 11.5 | 14.0 | 29,800 | 3.46 | 8.0 | 17,900 | 2.44 |
| 3684990 | 25HCB330A30 | CAP**3617A** | 58VLR105−12 | 30,000 | 11.5 | 14.0 | 29,800 | 3.54 | 8.1 | 18,000 | 2.46 |
| 3684989 | 25HCB330A30 | CAP**3617A** | 58VMR105−12 | 29,600 | 11.5 | 14.0 | 29,600 | 3.44 | 7.9 | 17,800 | 2.42 |
| 4807834 | 25HCB330A30 | CAP**3617A** | 59*N*A060V17**14 | 29,800 | 11.7 | 14.2 | 30,000 | 3.46 | 8.0 | 18,000 | 2.42 |
| 4807835 | 25HCB330A30 | CAP**3617A** | 59*N*A080V17**14 | 30,000 | 11.8 | 14.2 | 30,000 | 3.52 | 8.0 | 18,000 | 2.44 |
| 4807836 | 25HCB330A30 | CAP**3617A** | 59*P5A060E17**14 | 30,000 | 11.7 | 14.2 | 30,200 | 3.54 | 8.0 | 18,100 | 2.44 |
| 4807837 | 25HCB330A30 | CAP**3617A** | 59*P5A080E17**16 | 30,400 | 11.7 | 14.2 | 30,400 | 3.60 | 8.2 | 18,300 | 2.46 |
| 4209730 | 25HCB330A30 | CAP**3617A** | OVLAAB036098 | 30,000 | 11.5 | 14.0 | 29,800 | 3.50 | 8.0 | 18,000 | 2.44 |
| 4209729 | 25HCB330A30 | CAP**3617A** | OVMAAB036098 | 30,000 | 11.2 | 13.5 | 30,000 | 3.52 | 8.0 | 18,100 | 2.44 |
| 4209731 | 25HCB330A30 | CAP**3617A** | OVMAAB042112 | 30,000 | 11.5 | 14.5 | 29,800 | 3.56 | 8.2 | 17,900 | 2.46 |
| 3033535 | 25HCB330A30 | CAP**3617A**+TDR | | 30,000 | 10.8 | 13.0 | 30,000 | 3.50 | 8.0 | 18,800 | 2.40 |

See notes on pg. 35

# COMBINATION RATINGS CONTINUED

| AHRI Ref. No. | Model Number | Coil Model Number | Furnace Model Number | Cooling Capacity | EER | SEER | High Temp | | HSPF | Low Temp | |
|---|---|---|---|---|---|---|---|---|---|---|---|
| | | | | | | | E Capacity | E COP | | H Capacity | H COP |
| 3684969 | 25HCB330A30 | CAP**3619A** | 58HDV040−−12 | 30,000 | 11.2 | 13.5 | 30,000 | 3.50 | 8.1 | 18,300 | 2.42 |
| 3684970 | 25HCB330A30 | CAP**3619A** | 58HDV060−−12 | 30,000 | 11.2 | 13.5 | 30,000 | 3.56 | 8.2 | 18,300 | 2.46 |
| 4807843 | 25HCB330A30 | CAP**3619A** | 59*N*A060V17**14 | 29,800 | 11.7 | 14.2 | 30,000 | 3.46 | 8.0 | 18,000 | 2.42 |
| 4807844 | 25HCB330A30 | CAP**3619A** | 59*N*A080V17**14 | 30,000 | 11.8 | 14.2 | 30,000 | 3.52 | 8.0 | 18,000 | 2.44 |
| 4807845 | 25HCB330A30 | CAP**3619A** | 59*N*A100V21**20 | 30,200 | 11.8 | 14.5 | 30,200 | 3.56 | 8.0 | 18,100 | 2.46 |
| 4807846 | 25HCB330A30 | CAP**3619A** | 59*P5A060E17**14 | 30,000 | 11.7 | 14.2 | 30,200 | 3.54 | 8.0 | 18,100 | 2.44 |
| 4807847 | 25HCB330A30 | CAP**3619A** | 59*P5A080E17**16 | 30,400 | 11.7 | 14.2 | 30,400 | 3.60 | 8.2 | 18,300 | 2.46 |
| 3685041 | 25HCB330A30 | CAP**3619A**+TDR | | 30,000 | 10.8 | 13.0 | 30,000 | 3.50 | 8.0 | 18,800 | 2.40 |
| 3033542 | 25HCB330A30 | CAP**3621A** | 58CV(A,X)110−20 | 30,000 | 11.5 | 14.0 | 29,800 | 3.52 | 8.0 | 17,900 | 2.46 |
| 3033539 | 25HCB330A30 | CAP**3621A** | 58MV(B,C)080−14 | 30,000 | 11.5 | 14.0 | 30,000 | 3.50 | 8.0 | 17,900 | 2.46 |
| 3033540 | 25HCB330A30 | CAP**3621A** | 58MV(B,C)080−20 | 30,000 | 11.5 | 14.0 | 29,800 | 3.48 | 8.0 | 17,900 | 2.44 |
| 3033541 | 25HCB330A30 | CAP**3621A** | 58MV(B,C)100−20 | 30,000 | 11.5 | 14.0 | 29,800 | 3.50 | 8.0 | 17,900 | 2.46 |
| 3033516 | 25HCB330A30 | CAP**3621A** | 58PH*090−16 | 30,000 | 11.5 | 14.5 | 30,000 | 3.62 | 8.2 | 18,100 | 2.50 |
| 3757412 | 25HCB330A30 | CAP**3621A** | 58UVB080−14 | 30,000 | 11.5 | 14.0 | 30,000 | 3.50 | 8.0 | 17,900 | 2.46 |
| 3757413 | 25HCB330A30 | CAP**3621A** | 58UVB080−20 | 30,000 | 11.5 | 14.0 | 29,800 | 3.48 | 8.0 | 17,900 | 2.44 |
| 3757414 | 25HCB330A30 | CAP**3621A** | 58UVB100−20 | 30,000 | 11.5 | 14.0 | 29,800 | 3.50 | 8.0 | 17,900 | 2.46 |
| 4807838 | 25HCB330A30 | CAP**3621A** | 59*N*A060V17**14 | 29,800 | 11.7 | 14.2 | 30,000 | 3.48 | 8.0 | 18,000 | 2.42 |
| 4807839 | 25HCB330A30 | CAP**3621A** | 59*N*A080V17**14 | 30,000 | 11.9 | 14.5 | 30,000 | 3.52 | 8.0 | 18,000 | 2.44 |
| 4807840 | 25HCB330A30 | CAP**3621A** | 59*N*A100V21**20 | 30,200 | 11.9 | 14.5 | 30,200 | 3.58 | 8.2 | 18,000 | 2.46 |
| 4807841 | 25HCB330A30 | CAP**3621A** | 59*P5A060E17**14 | 30,200 | 11.8 | 14.2 | 30,400 | 3.58 | 8.2 | 18,200 | 2.46 |
| 4807842 | 25HCB330A30 | CAP**3621A** | 59*P5A080E17**16 | 30,400 | 11.8 | 14.2 | 30,600 | 3.64 | 8.2 | 18,300 | 2.48 |
| 4209732 | 25HCB330A30 | CAP**3621A** | OVLAAB048112 | 30,000 | 11.5 | 14.5 | 30,000 | 3.60 | 8.3 | 18,100 | 2.48 |
| 3033538 | 25HCB330A30 | CAP**3621A**+TDR | | 30,000 | 10.8 | 13.0 | 30,000 | 3.50 | 8.0 | 18,800 | 2.40 |
| 3685003 | 25HCB330A30 | CAP**4823A** | 58HDV040−−12 | 30,000 | 11.5 | 14.0 | 30,000 | 3.70 | 8.3 | 18,400 | 2.50 |
| 3685004 | 25HCB330A30 | CAP**4823A** | 58HDV060−−12 | 30,000 | 11.5 | 14.0 | 30,000 | 3.76 | 8.4 | 18,500 | 2.52 |
| 3685042 | 25HCB330A30 | CAP**4823A**+TDR | | 30,000 | 11.0 | 13.0 | 30,000 | 3.66 | 8.2 | 18,900 | 2.46 |
| 3033563 | 25HCB330A30 | CNPH*3017A** | 58CV(A,X)070−12 | 30,000 | 11.5 | 14.0 | 30,000 | 3.46 | 8.0 | 18,000 | 2.42 |
| 3033564 | 25HCB330A30 | CNPH*3017A** | 58CV(A,X)090−16 | 30,000 | 11.5 | 14.0 | 29,800 | 3.48 | 8.0 | 17,900 | 2.44 |
| 3033565 | 25HCB330A30 | CNPH*3017A** | 58CV(A,X)110−20 | 30,000 | 11.5 | 14.0 | 29,800 | 3.48 | 8.0 | 17,900 | 2.44 |
| 3033566 | 25HCB330A30 | CNPH*3017A** | 58CV(A,X)135−22 | 30,000 | 11.5 | 14.0 | 29,800 | 3.48 | 8.0 | 17,900 | 2.46 |
| 3033567 | 25HCB330A30 | CNPH*3017A** | 58CV(A,X)155−22 | 30,000 | 11.5 | 14.0 | 29,800 | 3.50 | 8.0 | 17,900 | 2.46 |
| 3684971 | 25HCB330A30 | CNPH*3017A** | 58HDV040−−12 | 30,000 | 11.2 | 13.5 | 30,000 | 3.46 | 8.0 | 18,200 | 2.42 |
| 3684972 | 25HCB330A30 | CNPH*3017A** | 58HDV060−−12 | 30,000 | 11.2 | 13.5 | 30,000 | 3.52 | 8.1 | 18,300 | 2.44 |
| 3684973 | 25HCB330A30 | CNPH*3017A** | 58HDV080−−20 | 30,000 | 11.2 | 13.5 | 30,000 | 3.62 | 8.2 | 18,200 | 2.48 |
| 3684974 | 25HCB330A30 | CNPH*3017A** | 58HDV100−−20 | 30,000 | 11.5 | 14.0 | 30,000 | 3.56 | 8.2 | 18,000 | 2.46 |
| 3618344 | 25HCB330A30 | CNPH*3017A** | 58ME(B,C)040−12 | 30,000 | 11.5 | 14.0 | 29,800 | 3.58 | 8.1 | 18,000 | 2.48 |
| 3121411 | 25HCB330A30 | CNPH*3017A** | 58ME(B,C)060−12 | 30,000 | 11.5 | 14.0 | 30,000 | 3.58 | 8.1 | 18,100 | 2.48 |
| 3121412 | 25HCB330A30 | CNPH*3017A** | 58ME(B,C)080−12 | 30,000 | 11.5 | 14.0 | 29,800 | 3.56 | 8.1 | 18,000 | 2.48 |
| 3121413 | 25HCB330A30 | CNPH*3017A** | 58ME(B,C)080−16 | 30,000 | 11.5 | 14.0 | 30,000 | 3.60 | 8.2 | 18,200 | 2.48 |
| 3121410 | 25HCB330A30 | CNPH*3017A** | 58MEB040−12 | 30,000 | 11.5 | 14.0 | 29,800 | 3.58 | 8.1 | 18,000 | 2.48 |
| 3033558 | 25HCB330A30 | CNPH*3017A** | 58MV(B,C)060−14 | 30,000 | 11.5 | 14.0 | 29,800 | 3.44 | 8.0 | 17,900 | 2.42 |
| 3033559 | 25HCB330A30 | CNPH*3017A** | 58MV(B,C)080−14 | 30,000 | 11.5 | 14.0 | 30,000 | 3.46 | 8.0 | 18,000 | 2.44 |
| 3033560 | 25HCB330A30 | CNPH*3017A** | 58MV(B,C)080−20 | 30,000 | 11.5 | 14.0 | 30,000 | 3.46 | 8.0 | 17,900 | 2.42 |
| 3033561 | 25HCB330A30 | CNPH*3017A** | 58MV(B,C)100−20 | 30,000 | 11.5 | 14.0 | 29,800 | 3.46 | 8.0 | 17,900 | 2.44 |
| 3033562 | 25HCB330A30 | CNPH*3017A** | 58MV(B,C)120−20 | 30,000 | 11.5 | 14.0 | 29,800 | 3.46 | 8.0 | 17,900 | 2.44 |
| 3033520 | 25HCB330A30 | CNPH*3017A** | 58PH*070−16 | 30,000 | 11.0 | 14.0 | 30,000 | 3.50 | 8.1 | 18,100 | 2.44 |
| 3033521 | 25HCB330A30 | CNPH*3017A** | 58PH*090−16 | 30,000 | 11.5 | 14.0 | 30,000 | 3.52 | 8.1 | 18,000 | 2.46 |
| 3684996 | 25HCB330A30 | CNPH*3017A** | 58VLR105−12 | 30,000 | 11.5 | 14.0 | 29,800 | 3.52 | 8.0 | 18,000 | 2.46 |
| 3684995 | 25HCB330A30 | CNPH*3017A** | 58VMR105−12 | 29,600 | 11.5 | 14.0 | 29,600 | 3.42 | 7.9 | 17,800 | 2.42 |
| 4807869 | 25HCB330A30 | CNPH*3017A** | 59*N*A060V17**14 | 29,800 | 11.6 | 14.2 | 30,000 | 3.44 | 7.8 | 18,000 | 2.40 |
| 4807870 | 25HCB330A30 | CNPH*3017A** | 59*N*A080V17**14 | 29,800 | 11.7 | 14.2 | 30,000 | 3.50 | 8.0 | 18,000 | 2.42 |
| 4807871 | 25HCB330A30 | CNPH*3017A** | 59*N*A100V21**20 | 30,000 | 11.8 | 14.2 | 30,200 | 3.54 | 8.0 | 18,100 | 2.44 |
| 4807872 | 25HCB330A30 | CNPH*3017A** | 59*N*A120V24**22 | 30,000 | 11.9 | 14.5 | 30,000 | 3.52 | 8.0 | 18,000 | 2.44 |
| 4807873 | 25HCB330A30 | CNPH*3017A** | 59*P5A060E17**14 | 30,000 | 11.6 | 14.2 | 30,200 | 3.52 | 8.0 | 18,100 | 2.42 |
| 4807874 | 25HCB330A30 | CNPH*3017A** | 59*P5A080E17**16 | 30,200 | 11.7 | 14.2 | 30,400 | 3.58 | 8.2 | 18,200 | 2.46 |
| 4209746 | 25HCB330A30 | CNPH*3017A** | OVLAAB036098 | 29,800 | 11.2 | 13.5 | 29,800 | 3.48 | 8.0 | 18,100 | 2.42 |
| 4209748 | 25HCB330A30 | CNPH*3017A** | OVLAAB048112 | 30,000 | 11.5 | 14.0 | 30,000 | 3.56 | 8.2 | 18,100 | 2.46 |
| 4209745 | 25HCB330A30 | CNPH*3017A** | OVMAAB036098 | 29,800 | 11.2 | 13.5 | 30,000 | 3.48 | 8.0 | 18,100 | 2.42 |
| 4209747 | 25HCB330A30 | CNPH*3017A** | OVMAAB042112 | 30,000 | 11.5 | 14.5 | 29,800 | 3.54 | 8.2 | 18,000 | 2.46 |
| 3033556 | 25HCB330A30 | CNPH*3017A**+TDR | | 30,000 | 10.8 | 13.0 | 30,000 | 3.48 | 8.0 | 18,800 | 2.38 |
| 3685028 | 25HCB330A30 | CNPH*3117A** | 58CV(A,X)070−12 | 30,000 | 11.5 | 14.5 | 30,000 | 3.64 | 8.1 | 18,100 | 2.50 |
| 3685029 | 25HCB330A30 | CNPH*3117A** | 58CV(A,X)090−16 | 30,000 | 12.0 | 14.5 | 30,000 | 3.66 | 8.2 | 18,000 | 2.52 |
| 3685030 | 25HCB330A30 | CNPH*3117A** | 58CV(A,X)110−20 | 30,000 | 12.0 | 14.5 | 30,000 | 3.68 | 8.2 | 18,000 | 2.52 |
| 3685031 | 25HCB330A30 | CNPH*3117A** | 58CV(A,X)135−22 | 30,000 | 12.0 | 14.5 | 30,000 | 3.68 | 8.2 | 18,000 | 2.54 |
| 3685032 | 25HCB330A30 | CNPH*3117A** | 58CV(A,X)155−22 | 30,000 | 12.0 | 14.5 | 30,000 | 3.70 | 8.2 | 18,000 | 2.54 |
| 3685047 | 25HCB330A30 | CNPH*3117A** | 58HDV040−−12 | 30,000 | 11.5 | 14.0 | 30,000 | 3.66 | 8.2 | 18,400 | 2.48 |
| 3685048 | 25HCB330A30 | CNPH*3117A** | 58HDV060−−12 | 30,000 | 11.5 | 14.0 | 30,000 | 3.74 | 8.3 | 18,400 | 2.52 |
| 3685036 | 25HCB330A30 | CNPH*3117A** | 58ME(B,C)060−12 | 30,000 | 12.0 | 14.5 | 30,000 | 3.82 | 8.5 | 18,200 | 2.58 |
| 3685037 | 25HCB330A30 | CNPH*3117A** | 58ME(B,C)080−12 | 30,000 | 12.0 | 14.5 | 30,000 | 3.78 | 8.5 | 18,200 | 2.56 |
| 3685038 | 25HCB330A30 | CNPH*3117A** | 58ME(B,C)080−16 | 30,000 | 12.0 | 14.5 | 30,000 | 3.86 | 8.6 | 18,300 | 2.58 |
| 3685035 | 25HCB330A30 | CNPH*3117A** | 58MEB040−12 | 30,000 | 12.0 | 14.5 | 30,000 | 3.82 | 8.5 | 18,200 | 2.58 |
| 3685023 | 25HCB330A30 | CNPH*3117A** | 58MV(B,C)060−14 | 30,000 | 12.0 | 14.5 | 30,000 | 3.72 | 8.3 | 18,100 | 2.54 |
| 3685024 | 25HCB330A30 | CNPH*3117A** | 58MV(B,C)080−14 | 30,000 | 11.5 | 14.5 | 30,000 | 3.62 | 8.2 | 18,000 | 2.50 |
| 3685025 | 25HCB330A30 | CNPH*3117A** | 58MV(B,C)080−20 | 30,000 | 12.0 | 14.5 | 30,000 | 3.66 | 8.2 | 18,000 | 2.52 |
| 3685026 | 25HCB330A30 | CNPH*3117A** | 58MV(B,C)100−20 | 30,000 | 11.5 | 14.5 | 30,000 | 3.58 | 8.0 | 18,000 | 2.48 |
| 3685027 | 25HCB330A30 | CNPH*3117A** | 58MV(B,C)120−20 | 30,000 | 12.0 | 14.5 | 30,000 | 3.68 | 8.2 | 18,000 | 2.52 |
| 3685022 | 25HCB330A30 | CNPH*3117A** | 58MVB040−14 | 30,000 | 11.5 | 14.5 | 30,000 | 3.64 | 8.2 | 18,100 | 2.50 |
| 3685033 | 25HCB330A30 | CNPH*3117A** | 58PH*070−16 | 30,000 | 11.5 | 14.0 | 30,000 | 3.72 | 8.5 | 18,300 | 2.52 |
| 3685034 | 25HCB330A30 | CNPH*3117A** | 58PH*090−16 | 30,000 | 12.0 | 14.5 | 30,000 | 3.76 | 8.5 | 18,200 | 2.54 |

See notes on pg. 35

# COMBINATION RATINGS CONTINUED

| AHRI Ref. No. | Model Number | Coil Model Number | Furnace Model Number | Cooling Capacity | EER | SEER | High Temp | | HSPF | Low Temp | |
|---|---|---|---|---|---|---|---|---|---|---|---|
| | | | | | | | E Capacity | E COP | | H Capacity | H COP |
| 4807875 | 25HCB330A30 | CNPH*3117A** | 59*N*A060V17**14 | 30,400 | 11.9 | 14.5 | 30,400 | 3.62 | 8.2 | 18,200 | 2.48 |
| 4807876 | 25HCB330A30 | CNPH*3117A** | 59*N*A080V17**14 | 30,600 | 12.0 | 14.5 | 30,400 | 3.68 | 8.2 | 18,200 | 2.50 |
| 4807877 | 25HCB330A30 | CNPH*3117A** | 59*N*A100V21**20 | 30,800 | 12.0 | 14.5 | 30,400 | 3.74 | 8.5 | 18,200 | 2.52 |
| 4807878 | 25HCB330A30 | CNPH*3117A** | 59*N*A120V24**22 | 30,800 | 12.0 | 14.5 | 30,200 | 3.72 | 8.2 | 18,100 | 2.52 |
| 4807879 | 25HCB330A30 | CNPH*3117A** | 59*P5A060E17**14 | 30,800 | 11.9 | 14.5 | 30,400 | 3.72 | 8.2 | 18,300 | 2.50 |
| 4807880 | 25HCB330A30 | CNPH*3117A** | 59*P5A080E17**16 | 31,000 | 12.0 | 14.5 | 30,600 | 3.80 | 8.5 | 18,400 | 2.54 |
| 4209750 | 25HCB330A30 | CNPH*3117A** | OVLAAB036098 | 30,000 | 11.5 | 14.5 | 30,000 | 3.66 | 8.4 | 18,200 | 2.50 |
| 4209752 | 25HCB330A30 | CNPH*3117A** | OVLAAB048112 | 30,000 | 11.5 | 14.5 | 30,000 | 3.76 | 8.6 | 18,300 | 2.54 |
| 4209749 | 25HCB330A30 | CNPH*3117A** | OVMAAB036098 | 30,000 | 11.5 | 14.5 | 30,000 | 3.68 | 8.4 | 18,300 | 2.50 |
| 4209751 | 25HCB330A30 | CNPH*3117A** | OVMAAB042112 | 30,000 | 12.0 | 14.5 | 30,000 | 3.74 | 8.5 | 18,100 | 2.54 |
| 3685021 | 25HCB330A30 | CNPH*3117A**+TDR | | 30,000 | 11.0 | 13.0 | 30,000 | 3.68 | 8.2 | 18,900 | 2.46 |
| 3033575 | 25HCB330A30 | CNPH*3617A** | 58CV(A,X)070–12 | 30,000 | 11.5 | 14.0 | 30,000 | 3.46 | 8.0 | 18,000 | 2.42 |
| 3033576 | 25HCB330A30 | CNPH*3617A** | 58CV(A,X)090–16 | 30,000 | 11.5 | 14.0 | 29,800 | 3.48 | 8.0 | 17,900 | 2.44 |
| 3033577 | 25HCB330A30 | CNPH*3617A** | 58CV(A,X)110–20 | 30,000 | 11.5 | 14.0 | 29,800 | 3.48 | 8.0 | 17,900 | 2.44 |
| 3033578 | 25HCB330A30 | CNPH*3617A** | 58CV(A,X)135–22 | 30,000 | 11.5 | 14.0 | 29,800 | 3.48 | 8.0 | 17,900 | 2.46 |
| 3033579 | 25HCB330A30 | CNPH*3617A** | 58CV(A,X)155–22 | 30,000 | 11.5 | 14.0 | 29,800 | 3.50 | 8.0 | 17,900 | 2.46 |
| 3684975 | 25HCB330A30 | CNPH*3617A** | 58HDV040––12 | 30,000 | 11.2 | 13.5 | 30,000 | 3.46 | 8.0 | 18,200 | 2.42 |
| 3684976 | 25HCB330A30 | CNPH*3617A** | 58HDV060––12 | 30,000 | 11.2 | 13.5 | 30,000 | 3.52 | 8.1 | 18,300 | 2.44 |
| 3684977 | 25HCB330A30 | CNPH*3617A** | 58HDV080––20 | 30,000 | 11.2 | 13.5 | 30,000 | 3.62 | 8.2 | 18,200 | 2.48 |
| 3684978 | 25HCB330A30 | CNPH*3617A** | 58HDV100––20 | 30,000 | 11.5 | 14.0 | 30,000 | 3.56 | 8.2 | 18,000 | 2.46 |
| 3618352 | 25HCB330A30 | CNPH*3617A** | 58ME(B,C)040–12 | 30,000 | 11.5 | 14.0 | 29,800 | 3.58 | 8.1 | 18,000 | 2.48 |
| 3121415 | 25HCB330A30 | CNPH*3617A** | 58ME(B,C)060–12 | 30,000 | 11.5 | 14.0 | 30,000 | 3.58 | 8.1 | 18,100 | 2.48 |
| 3121416 | 25HCB330A30 | CNPH*3617A** | 58ME(B,C)080–12 | 30,000 | 11.5 | 14.0 | 29,800 | 3.56 | 8.1 | 18,000 | 2.48 |
| 3121417 | 25HCB330A30 | CNPH*3617A** | 58ME(B,C)080–16 | 30,000 | 11.5 | 14.0 | 30,000 | 3.60 | 8.2 | 18,200 | 2.48 |
| 3121414 | 25HCB330A30 | CNPH*3617A** | 58MEB040–12 | 30,000 | 11.5 | 14.0 | 29,800 | 3.58 | 8.1 | 18,000 | 2.48 |
| 3033570 | 25HCB330A30 | CNPH*3617A** | 58MV(B,C)060–14 | 30,000 | 11.5 | 14.0 | 29,800 | 3.44 | 8.0 | 17,900 | 2.42 |
| 3033571 | 25HCB330A30 | CNPH*3617A** | 58MV(B,C)080–14 | 30,000 | 11.5 | 14.0 | 30,000 | 3.46 | 8.0 | 18,000 | 2.44 |
| 3033572 | 25HCB330A30 | CNPH*3617A** | 58MV(B,C)080–20 | 30,000 | 11.5 | 14.0 | 30,000 | 3.46 | 8.0 | 17,900 | 2.42 |
| 3033573 | 25HCB330A30 | CNPH*3617A** | 58MV(B,C)100–20 | 30,000 | 11.5 | 14.0 | 29,800 | 3.46 | 8.0 | 17,900 | 2.44 |
| 3033574 | 25HCB330A30 | CNPH*3617A** | 58MV(B,C)120–20 | 30,000 | 11.5 | 14.0 | 29,800 | 3.46 | 8.0 | 17,900 | 2.44 |
| 3033522 | 25HCB330A30 | CNPH*3617A** | 58PH*070–16 | 30,000 | 11.0 | 14.0 | 30,000 | 3.50 | 8.1 | 18,100 | 2.44 |
| 3033523 | 25HCB330A30 | CNPH*3617A** | 58PH*090–16 | 30,000 | 11.5 | 14.0 | 30,000 | 3.52 | 8.1 | 18,000 | 2.46 |
| 3684998 | 25HCB330A30 | CNPH*3617A** | 58VLR105–12 | 30,000 | 11.5 | 14.0 | 29,800 | 3.52 | 8.0 | 18,000 | 2.46 |
| 3684997 | 25HCB330A30 | CNPH*3617A** | 58VMR105–12 | 29,600 | 11.5 | 14.0 | 29,600 | 3.42 | 7.9 | 17,800 | 2.42 |
| 4807881 | 25HCB330A30 | CNPH*3617A** | 59*N*A060V17**14 | 29,800 | 11.6 | 14.2 | 30,000 | 3.44 | 7.8 | 18,000 | 2.40 |
| 4807882 | 25HCB330A30 | CNPH*3617A** | 59*N*A080V17**14 | 29,800 | 11.7 | 14.2 | 30,000 | 3.50 | 8.0 | 18,000 | 2.42 |
| 4807883 | 25HCB330A30 | CNPH*3617A** | 59*N*A100V21**20 | 30,000 | 11.8 | 14.2 | 30,200 | 3.54 | 8.0 | 18,100 | 2.44 |
| 4807884 | 25HCB330A30 | CNPH*3617A** | 59*N*A120V24**22 | 30,000 | 11.9 | 14.5 | 30,000 | 3.52 | 8.0 | 18,000 | 2.44 |
| 4807885 | 25HCB330A30 | CNPH*3617A** | 59*P5A060E17**14 | 30,000 | 11.6 | 14.2 | 30,200 | 3.52 | 8.0 | 18,100 | 2.42 |
| 4807886 | 25HCB330A30 | CNPH*3617A** | 59*P5A080E17**16 | 30,200 | 11.7 | 14.2 | 30,400 | 3.58 | 8.2 | 18,200 | 2.46 |
| 4209754 | 25HCB330A30 | CNPH*3617A** | OVLAAB036098 | 29,800 | 11.2 | 13.5 | 29,800 | 3.48 | 8.0 | 18,100 | 2.42 |
| 4209756 | 25HCB330A30 | CNPH*3617A** | OVLAAB048112 | 30,000 | 11.5 | 14.0 | 30,000 | 3.56 | 8.2 | 18,100 | 2.46 |
| 4209753 | 25HCB330A30 | CNPH*3617A** | OVMAAB036098 | 29,800 | 11.2 | 13.5 | 30,000 | 3.48 | 8.0 | 18,100 | 2.42 |
| 4209755 | 25HCB330A30 | CNPH*3617A** | OVMAAB042112 | 30,000 | 11.5 | 14.5 | 29,800 | 3.54 | 8.1 | 18,000 | 2.46 |
| 3033568 | 25HCB330A30 | CNPH*3617A**+TDR | | 30,000 | 10.8 | 13.0 | 30,000 | 3.48 | 8.0 | 18,800 | 2.38 |
| 3033544 | 25HCB330A30 | CNPV*3014A** | 58CV(A,X)070–12 | 30,000 | 11.2 | 13.5 | 30,000 | 3.44 | 8.0 | 18,000 | 2.42 |
| 3033543 | 25HCB330A30 | CNPV*3014A**+TDR | | 30,000 | 10.8 | 13.0 | 30,000 | 3.48 | 8.0 | 18,800 | 2.38 |
| 3033547 | 25HCB330A30 | CNPV*3017A** | 58CV(A,X)090–16 | 30,000 | 11.5 | 14.0 | 29,800 | 3.48 | 8.0 | 17,900 | 2.44 |
| 4209765 | 25HCB330A30 | CNPV*3017A** | 58HDV040––12 | 29,800 | 11.2 | 13.5 | 30,000 | 3.46 | 8.0 | 18,200 | 2.40 |
| 4209766 | 25HCB330A30 | CNPV*3017A** | 58HDV060––12 | 30,000 | 11.2 | 13.5 | 30,000 | 3.52 | 8.0 | 18,300 | 2.42 |
| 3618342 | 25HCB330A30 | CNPV*3017A** | 58ME(B,C)040–12 | 30,000 | 11.5 | 14.0 | 29,800 | 3.58 | 8.1 | 18,000 | 2.48 |
| 3121403 | 25HCB330A30 | CNPV*3017A** | 58ME(B,C)060–12 | 30,000 | 11.5 | 14.0 | 30,000 | 3.58 | 8.1 | 18,100 | 2.48 |
| 3121404 | 25HCB330A30 | CNPV*3017A** | 58ME(B,C)080–12 | 30,000 | 11.5 | 14.0 | 29,800 | 3.56 | 8.1 | 18,000 | 2.48 |
| 3121405 | 25HCB330A30 | CNPV*3017A** | 58ME(B,C)080–16 | 30,000 | 11.5 | 14.0 | 30,000 | 3.60 | 8.2 | 18,200 | 2.48 |
| 3121402 | 25HCB330A30 | CNPV*3017A** | 58MEB040–12 | 30,000 | 11.5 | 14.0 | 29,800 | 3.58 | 8.1 | 18,000 | 2.48 |
| 3033546 | 25HCB330A30 | CNPV*3017A** | 58MV(B,C)060–14 | 30,000 | 11.5 | 14.0 | 29,800 | 3.44 | 8.0 | 17,900 | 2.42 |
| 3033517 | 25HCB330A30 | CNPV*3017A** | 58PH*070–16 | 30,000 | 11.0 | 14.0 | 30,000 | 3.50 | 8.1 | 18,100 | 2.44 |
| 3758725 | 25HCB330A30 | CNPV*3017A** | 58UVB060–14 | 30,000 | 11.5 | 14.0 | 29,800 | 3.44 | 8.0 | 17,900 | 2.42 |
| 3684992 | 25HCB330A30 | CNPV*3017A** | 58VLR105–12 | 30,000 | 11.5 | 14.0 | 29,800 | 3.52 | 8.0 | 18,000 | 2.46 |
| 3684991 | 25HCB330A30 | CNPV*3017A** | 58VMR105–12 | 29,600 | 11.5 | 14.0 | 29,600 | 3.42 | 7.9 | 17,800 | 2.42 |
| 4807848 | 25HCB330A30 | CNPV*3017A** | 59*N*A060V17**14 | 29,800 | 11.6 | 14.2 | 30,000 | 3.44 | 7.8 | 18,000 | 2.40 |
| 4807849 | 25HCB330A30 | CNPV*3017A** | 59*N*A080V17**14 | 29,800 | 11.7 | 14.2 | 30,000 | 3.50 | 8.0 | 18,000 | 2.42 |
| 4807850 | 25HCB330A30 | CNPV*3017A** | 59*P5A060E17**14 | 30,000 | 11.6 | 14.2 | 30,200 | 3.52 | 8.0 | 18,100 | 2.42 |
| 4807851 | 25HCB330A30 | CNPV*3017A** | 59*P5A080E17**16 | 30,200 | 11.7 | 14.2 | 30,400 | 3.58 | 8.2 | 18,200 | 2.46 |
| 4209734 | 25HCB330A30 | CNPV*3017A** | OVLAAB036098 | 29,800 | 11.2 | 13.5 | 29,800 | 3.48 | 8.0 | 18,100 | 2.42 |
| 4209733 | 25HCB330A30 | CNPV*3017A** | OVMAAB036098 | 29,800 | 11.2 | 13.5 | 30,000 | 3.48 | 8.0 | 18,100 | 2.42 |
| 4209735 | 25HCB330A30 | CNPV*3017A** | OVMAAB042112 | 30,000 | 11.5 | 14.5 | 29,800 | 3.54 | 8.2 | 18,000 | 2.46 |
| 3033545 | 25HCB330A30 | CNPV*3017A**+TDR | | 30,000 | 10.8 | 13.0 | 30,000 | 3.48 | 8.0 | 18,800 | 2.38 |
| 3685007 | 25HCB330A30 | CNPV*3117A** | 58CV(A,X)090–16 | 30,000 | 12.0 | 14.5 | 30,000 | 3.66 | 8.2 | 18,000 | 2.52 |
| 4209767 | 25HCB330A30 | CNPV*3117A** | 58HDV040––12 | 30,000 | 11.5 | 14.0 | 30,000 | 3.68 | 8.4 | 18,400 | 2.48 |
| 4209768 | 25HCB330A30 | CNPV*3117A** | 58HDV060––12 | 30,000 | 11.5 | 14.0 | 30,000 | 3.74 | 8.5 | 18,400 | 2.52 |
| 3685010 | 25HCB330A30 | CNPV*3117A** | 58ME(B,C)060–12 | 30,000 | 12.0 | 14.5 | 30,000 | 3.82 | 8.5 | 18,200 | 2.58 |
| 3685011 | 25HCB330A30 | CNPV*3117A** | 58ME(B,C)080–12 | 30,000 | 12.0 | 14.5 | 30,000 | 3.78 | 8.5 | 18,200 | 2.56 |
| 3685012 | 25HCB330A30 | CNPV*3117A** | 58ME(B,C)080–16 | 30,000 | 12.0 | 14.5 | 30,000 | 3.86 | 8.5 | 18,300 | 2.58 |
| 3685009 | 25HCB330A30 | CNPV*3117A** | 58MEB040–12 | 30,000 | 12.0 | 14.5 | 30,000 | 3.82 | 8.5 | 18,200 | 2.58 |
| 3685006 | 25HCB330A30 | CNPV*3117A** | 58MV(B,C)060–14 | 30,000 | 12.0 | 14.5 | 30,000 | 3.72 | 8.5 | 18,100 | 2.54 |
| 3685008 | 25HCB330A30 | CNPV*3117A** | 58PH*070–16 | 30,000 | 11.5 | 14.0 | 30,000 | 3.72 | 8.5 | 18,300 | 2.52 |
| 3685288 | 25HCB330A30 | CNPV*3117A** | 58UVB060–14 | 30,000 | 12.0 | 14.5 | 30,000 | 3.72 | 8.5 | 18,100 | 2.54 |
| 4807852 | 25HCB330A30 | CNPV*3117A** | 59*N*A060V17**14 | 30,400 | 11.9 | 14.5 | 30,400 | 3.62 | 8.2 | 18,200 | 2.48 |

See notes on pg. 35

# COMBINATION RATINGS CONTINUED

| AHRI Ref. No. | Model Number | Coil Model Number | Furnace Model Number | Cooling Capacity | EER | SEER | High Temp | | HSPF | Low Temp | |
|---|---|---|---|---|---|---|---|---|---|---|---|
| | | | | | | | E Capacity | E COP | | H Capacity | H COP |
| 4807853 | 25HCB330A30 | CNPV*3117A** | 59*N*A080V17**14 | 30,600 | 12.0 | 14.5 | 30,400 | 3.68 | 8.2 | 18,200 | 2.50 |
| 4807854 | 25HCB330A30 | CNPV*3117A** | 59*P5A060E17**14 | 30,800 | 11.9 | 14.5 | 30,400 | 3.72 | 8.2 | 18,300 | 2.50 |
| 4807855 | 25HCB330A30 | CNPV*3117A** | 59*P5A080E17**16 | 31,000 | 12.0 | 14.5 | 30,600 | 3.80 | 8.5 | 18,400 | 2.54 |
| 4209737 | 25HCB330A30 | CNPV*3117A** | OVLAAB036098 | 30,000 | 11.5 | 14.5 | 30,000 | 3.66 | 8.4 | 18,200 | 2.50 |
| 4209736 | 25HCB330A30 | CNPV*3117A** | OVMAAB036098 | 30,000 | 11.5 | 14.0 | 30,000 | 3.68 | 8.4 | 18,300 | 2.50 |
| 4209738 | 25HCB330A30 | CNPV*3117A** | OVMAAB042112 | 30,000 | 12.0 | 14.5 | 30,000 | 3.72 | 8.5 | 18,100 | 2.54 |
| 3685005 | 25HCB330A30 | CNPV*3117A**+TDR | | 30,000 | 11.0 | 13.0 | 30,000 | 3.68 | 8.2 | 18,900 | 2.46 |
| 3033550 | 25HCB330A30 | CNPV*3617A** | 58CV(A,X)090–16 | 30,000 | 11.5 | 14.0 | 29,800 | 3.48 | 8.0 | 17,900 | 2.44 |
| 4209769 | 25HCB330A30 | CNPV*3617A** | 58HDV040––12 | 29,800 | 11.2 | 13.5 | 30,000 | 3.46 | 8.0 | 18,200 | 2.40 |
| 4209770 | 25HCB330A30 | CNPV*3617A** | 58HDV060––12 | 30,000 | 11.2 | 13.5 | 30,000 | 3.52 | 8.0 | 18,300 | 2.42 |
| 3618343 | 25HCB330A30 | CNPV*3617A** | 58ME(B,C)040–12 | 30,000 | 11.5 | 14.0 | 29,800 | 3.58 | 8.1 | 18,000 | 2.48 |
| 3121407 | 25HCB330A30 | CNPV*3617A** | 58ME(B,C)060–12 | 30,000 | 11.5 | 14.0 | 30,000 | 3.58 | 8.1 | 18,100 | 2.48 |
| 3121408 | 25HCB330A30 | CNPV*3617A** | 58ME(B,C)080–12 | 30,000 | 11.5 | 14.0 | 29,800 | 3.56 | 8.1 | 18,000 | 2.48 |
| 3121409 | 25HCB330A30 | CNPV*3617A** | 58ME(B,C)080–16 | 30,000 | 11.5 | 14.0 | 30,000 | 3.60 | 8.2 | 18,200 | 2.48 |
| 3121406 | 25HCB330A30 | CNPV*3617A** | 58MEB040–12 | 30,000 | 11.5 | 14.0 | 29,800 | 3.58 | 8.1 | 18,000 | 2.48 |
| 3033549 | 25HCB330A30 | CNPV*3617A** | 58MV(B,C)060–14 | 30,000 | 11.5 | 14.0 | 29,800 | 3.44 | 8.0 | 17,900 | 2.42 |
| 3033518 | 25HCB330A30 | CNPV*3617A** | 58PH*070–16 | 30,000 | 11.0 | 14.0 | 30,000 | 3.50 | 8.1 | 18,100 | 2.44 |
| 3758726 | 25HCB330A30 | CNPV*3617A** | 58UVB060–14 | 30,000 | 11.5 | 14.0 | 29,800 | 3.44 | 8.0 | 17,900 | 2.42 |
| 3684994 | 25HCB330A30 | CNPV*3617A** | 58VLR105–12 | 30,000 | 11.5 | 14.0 | 29,800 | 3.52 | 8.0 | 18,000 | 2.46 |
| 3684993 | 25HCB330A30 | CNPV*3617A** | 58VMR105–12 | 29,600 | 11.5 | 14.0 | 29,600 | 3.42 | 7.9 | 17,800 | 2.42 |
| 4807856 | 25HCB330A30 | CNPV*3617A** | 59*N*A060V17**14 | 29,800 | 11.6 | 14.2 | 30,000 | 3.44 | 7.8 | 18,000 | 2.40 |
| 4807857 | 25HCB330A30 | CNPV*3617A** | 59*N*A080V17**14 | 29,800 | 11.7 | 14.2 | 30,000 | 3.50 | 8.0 | 18,000 | 2.42 |
| 4807858 | 25HCB330A30 | CNPV*3617A** | 59*P5A060E17**14 | 30,000 | 11.6 | 14.2 | 30,200 | 3.52 | 8.0 | 18,100 | 2.42 |
| 4807859 | 25HCB330A30 | CNPV*3617A** | 59*P5A080E17**16 | 30,200 | 11.7 | 14.2 | 30,400 | 3.58 | 8.2 | 18,200 | 2.46 |
| 4209740 | 25HCB330A30 | CNPV*3617A** | OVLAAB036098 | 29,800 | 11.2 | 13.5 | 29,800 | 3.48 | 8.0 | 18,100 | 2.42 |
| 4209739 | 25HCB330A30 | CNPV*3617A** | OVMAAB036098 | 29,800 | 11.2 | 13.5 | 30,000 | 3.48 | 8.0 | 18,100 | 2.42 |
| 4209741 | 25HCB330A30 | CNPV*3617A** | OVMAAB042112 | 30,000 | 11.5 | 14.5 | 29,800 | 3.54 | 8.2 | 18,000 | 2.46 |
| 3033548 | 25HCB330A30 | CNPV*3617A**+TDR | | 30,000 | 10.8 | 13.0 | 30,000 | 3.48 | 8.0 | 18,800 | 2.38 |
| 3033555 | 25HCB330A30 | CNPV*3621A** | 58CV(A,X)110–20 | 30,000 | 11.5 | 14.0 | 29,800 | 3.48 | 8.0 | 17,900 | 2.44 |
| 4209771 | 25HCB330A30 | CNPV*3621A** | 58HDV040––12 | 29,800 | 11.2 | 13.5 | 30,000 | 3.48 | 8.0 | 18,200 | 2.40 |
| 4209772 | 25HCB330A30 | CNPV*3621A** | 58HDV060––12 | 30,000 | 11.2 | 13.5 | 30,000 | 3.54 | 8.2 | 18,300 | 2.44 |
| 4209773 | 25HCB330A30 | CNPV*3621A** | 58HDV080––20 | 30,000 | 11.5 | 14.0 | 30,000 | 3.62 | 8.3 | 18,200 | 2.48 |
| 3033552 | 25HCB330A30 | CNPV*3621A** | 58MV(B,C)080–14 | 30,000 | 11.5 | 14.0 | 30,000 | 3.46 | 8.0 | 18,000 | 2.44 |
| 3033553 | 25HCB330A30 | CNPV*3621A** | 58MV(B,C)080–20 | 30,000 | 11.5 | 14.0 | 29,800 | 3.46 | 8.0 | 17,900 | 2.44 |
| 3033554 | 25HCB330A30 | CNPV*3621A** | 58MV(B,C)100–20 | 30,000 | 11.5 | 14.0 | 29,800 | 3.46 | 8.0 | 17,900 | 2.44 |
| 3033519 | 25HCB330A30 | CNPV*3621A** | 58PH*090–16 | 30,000 | 11.5 | 14.0 | 30,000 | 3.54 | 8.1 | 18,000 | 2.46 |
| 3758727 | 25HCB330A30 | CNPV*3621A** | 58UVB080–14 | 30,000 | 11.5 | 14.0 | 30,000 | 3.46 | 8.0 | 18,000 | 2.44 |
| 3758728 | 25HCB330A30 | CNPV*3621A** | 58UVB080–20 | 30,000 | 11.5 | 14.0 | 29,800 | 3.46 | 8.0 | 17,900 | 2.44 |
| 3758729 | 25HCB330A30 | CNPV*3621A** | 58UVB100–20 | 30,000 | 11.5 | 14.0 | 29,800 | 3.46 | 8.0 | 17,900 | 2.44 |
| 4807860 | 25HCB330A30 | CNPV*3621A** | 59*N*A060V17**14 | 29,800 | 11.6 | 14.2 | 30,000 | 3.44 | 7.8 | 18,000 | 2.40 |
| 4807861 | 25HCB330A30 | CNPV*3621A** | 59*N*A080V17**14 | 29,800 | 11.7 | 14.2 | 30,000 | 3.50 | 8.0 | 18,000 | 2.42 |
| 4807862 | 25HCB330A30 | CNPV*3621A** | 59*N*A100V21**20 | 30,000 | 11.8 | 14.2 | 30,200 | 3.54 | 8.0 | 18,100 | 2.44 |
| 4807863 | 25HCB330A30 | CNPV*3621A** | 59*P5A060E17**14 | 30,000 | 11.7 | 14.2 | 30,200 | 3.52 | 8.0 | 18,100 | 2.42 |
| 4807864 | 25HCB330A30 | CNPV*3621A** | 59*P5A080E17**16 | 30,200 | 11.7 | 14.2 | 30,400 | 3.58 | 8.2 | 18,200 | 2.46 |
| 3033551 | 25HCB330A30 | CNPV*3621A**+TDR | | 30,000 | 10.8 | 13.0 | 30,000 | 3.48 | 8.0 | 18,800 | 2.38 |
| 3685015 | 25HCB330A30 | CNPV*3717A** | 58CV(A,X)090–16 | 30,000 | 12.0 | 14.5 | 30,000 | 3.78 | 8.5 | 18,000 | 2.56 |
| 4209774 | 25HCB330A30 | CNPV*3717A** | 58HDV040––12 | 30,000 | 11.5 | 14.0 | 30,000 | 3.78 | 8.5 | 18,500 | 2.52 |
| 4209775 | 25HCB330A30 | CNPV*3717A** | 58HDV060––12 | 30,000 | 11.5 | 14.5 | 30,000 | 3.86 | 8.8 | 18,500 | 2.56 |
| 3685018 | 25HCB330A30 | CNPV*3717A** | 58ME(B,C)060–12 | 30,000 | 12.0 | 14.5 | 30,000 | 3.94 | 8.7 | 18,300 | 2.62 |
| 3685019 | 25HCB330A30 | CNPV*3717A** | 58ME(B,C)080–12 | 30,000 | 12.0 | 14.5 | 30,000 | 3.90 | 8.6 | 18,200 | 2.60 |
| 3685020 | 25HCB330A30 | CNPV*3717A** | 58ME(B,C)080–16 | 30,000 | 12.0 | 14.5 | 30,000 | 3.96 | 8.8 | 18,400 | 2.62 |
| 3685017 | 25HCB330A30 | CNPV*3717A** | 58MEB040–12 | 30,000 | 12.2 | 15.0 | 30,000 | 3.92 | 8.7 | 18,200 | 2.62 |
| 3685014 | 25HCB330A30 | CNPV*3717A** | 58MV(B,C)060–14 | 30,000 | 12.0 | 14.5 | 30,000 | 3.84 | 8.5 | 18,100 | 2.58 |
| 3685016 | 25HCB330A30 | CNPV*3717A** | 58PH*070–16 | 30,000 | 12.0 | 14.5 | 30,000 | 3.84 | 8.5 | 18,400 | 2.56 |
| 3685289 | 25HCB330A30 | CNPV*3717A** | 58UVB060–14 | 30,000 | 12.0 | 14.5 | 30,000 | 3.84 | 8.5 | 18,100 | 2.58 |
| 4807865 | 25HCB330A30 | CNPV*3717A** | 59*N*A060V17**14 | 30,800 | 12.0 | 14.5 | 30,200 | 3.74 | 8.5 | 18,200 | 2.50 |
| 4807866 | 25HCB330A30 | CNPV*3717A** | 59*N*A080V17**14 | 31,000 | 12.0 | 14.5 | 30,200 | 3.80 | 8.5 | 18,200 | 2.54 |
| 4807867 | 25HCB330A30 | CNPV*3717A** | 59*P5A060E17**14 | 31,200 | 12.0 | 14.5 | 30,400 | 3.84 | 8.5 | 18,400 | 2.54 |
| 4807868 | 25HCB330A30 | CNPV*3717A** | 59*P5A080E17**16 | 31,400 | 12.0 | 14.5 | 30,400 | 3.90 | 8.5 | 18,400 | 2.58 |
| 4209743 | 25HCB330A30 | CNPV*3717A** | OVLAAB036098 | 30,000 | 12.0 | 14.5 | 30,000 | 3.78 | 8.6 | 18,200 | 2.54 |
| 4209742 | 25HCB330A30 | CNPV*3717A** | OVMAAB036098 | 30,000 | 11.5 | 14.5 | 30,000 | 3.78 | 8.6 | 18,300 | 2.52 |
| 4209744 | 25HCB330A30 | CNPV*3717A** | OVMAAB042112 | 30,000 | 12.0 | 14.5 | 30,000 | 3.84 | 8.8 | 18,100 | 2.58 |
| 3685013 | 25HCB330A30 | CNPV*3717A**+TDR | | 30,000 | 11.2 | 13.5 | 30,000 | 3.76 | 8.5 | 19,000 | 2.48 |
| 3033588 | 25HCB330A30 | CSPH*3012A** | 58CV(A,X)070–12 | 30,000 | 11.5 | 14.0 | 30,000 | 3.46 | 8.0 | 18,000 | 2.42 |
| 3033589 | 25HCB330A30 | CSPH*3012A** | 58CV(A,X)090–16 | 30,000 | 11.5 | 14.0 | 29,800 | 3.48 | 8.0 | 17,900 | 2.44 |
| 3033590 | 25HCB330A30 | CSPH*3012A** | 58CV(A,X)110–20 | 30,000 | 11.5 | 14.0 | 30,000 | 3.50 | 8.0 | 18,000 | 2.44 |
| 3033591 | 25HCB330A30 | CSPH*3012A** | 58CV(A,X)135–22 | 30,000 | 11.5 | 14.0 | 30,000 | 3.50 | 8.0 | 17,900 | 2.46 |
| 3033592 | 25HCB330A30 | CSPH*3012A** | 58CV(A,X)155–22 | 30,000 | 11.5 | 14.0 | 30,000 | 3.50 | 8.0 | 17,900 | 2.46 |
| 3684979 | 25HCB330A30 | CSPH*3012A** | 58HDV040––12 | 30,000 | 11.2 | 13.5 | 30,000 | 3.46 | 8.0 | 18,300 | 2.40 |
| 3684980 | 25HCB330A30 | CSPH*3012A** | 58HDV060––12 | 30,000 | 11.2 | 13.5 | 30,000 | 3.50 | 8.1 | 18,300 | 2.42 |
| 3684981 | 25HCB330A30 | CSPH*3012A** | 58HDV080––20 | 30,000 | 11.2 | 13.5 | 30,000 | 3.60 | 8.2 | 18,200 | 2.48 |
| 3684982 | 25HCB330A30 | CSPH*3012A** | 58HDV100––20 | 30,000 | 11.5 | 14.0 | 30,000 | 3.52 | 8.1 | 18,000 | 2.46 |
| 3618353 | 25HCB330A30 | CSPH*3012A** | 58ME(B,C)040–12 | 30,000 | 11.5 | 14.0 | 29,800 | 3.56 | 8.1 | 18,000 | 2.48 |
| 3121419 | 25HCB330A30 | CSPH*3012A** | 58ME(B,C)060–12 | 30,000 | 11.5 | 14.0 | 30,000 | 3.58 | 8.1 | 18,100 | 2.48 |
| 3121420 | 25HCB330A30 | CSPH*3012A** | 58ME(B,C)080–12 | 30,000 | 11.5 | 14.0 | 29,800 | 3.54 | 8.1 | 18,000 | 2.46 |
| 3121421 | 25HCB330A30 | CSPH*3012A** | 58ME(B,C)080–16 | 30,000 | 11.5 | 14.0 | 30,000 | 3.60 | 8.2 | 18,200 | 2.48 |
| 3121418 | 25HCB330A30 | CSPH*3012A** | 58MEB040–12 | 30,000 | 11.5 | 14.0 | 29,800 | 3.56 | 8.1 | 18,000 | 2.48 |
| 3033583 | 25HCB330A30 | CSPH*3012A** | 58MV(B,C)060–14 | 30,000 | 11.5 | 14.0 | 30,000 | 3.46 | 8.0 | 18,000 | 2.42 |
| 3033584 | 25HCB330A30 | CSPH*3012A** | 58MV(B,C)080–14 | 30,000 | 11.5 | 14.0 | 30,000 | 3.46 | 8.0 | 18,000 | 2.42 |

See notes on pg. 35

# COMBINATION RATINGS CONTINUED

| AHRI Ref. No. | Model Number | Coil Model Number | Furnace Model Number | Cooling Capacity | EER | SEER | High Temp | | HSPF | Low Temp | |
|---|---|---|---|---|---|---|---|---|---|---|---|
| | | | | | | | E Capacity | E COP | | H Capacity | H COP |
| 3033585 | 25HCB330A30 | CSPH*3012A** | 58MV(B,C)080−20 | 30,000 | 11.5 | 14.0 | 30,000 | 3.46 | 8.0 | 18,000 | 2.44 |
| 3033586 | 25HCB330A30 | CSPH*3012A** | 58MV(B,C)100−20 | 30,000 | 11.5 | 14.0 | 30,000 | 3.48 | 8.0 | 18,000 | 2.44 |
| 3033587 | 25HCB330A30 | CSPH*3012A** | 58MV(B,C)120−20 | 30,000 | 11.5 | 14.0 | 29,800 | 3.46 | 8.0 | 17,900 | 2.44 |
| 3033524 | 25HCB330A30 | CSPH*3012A** | 58PH*070−16 | 30,000 | 11.0 | 14.0 | 30,000 | 3.48 | 8.1 | 18,100 | 2.44 |
| 3033525 | 25HCB330A30 | CSPH*3012A** | 58PH*090−16 | 30,000 | 11.5 | 14.0 | 30,000 | 3.50 | 8.1 | 18,000 | 2.44 |
| 3685000 | 25HCB330A30 | CSPH*3012A** | 58VLR105−12 | 30,000 | 11.5 | 14.0 | 30,000 | 3.54 | 8.0 | 18,100 | 2.46 |
| 3684999 | 25HCB330A30 | CSPH*3012A** | 58VMR105−12 | 29,800 | 11.5 | 14.0 | 29,600 | 3.42 | 7.9 | 17,900 | 2.40 |
| 4807887 | 25HCB330A30 | CSPH*3012A** | 59*N*A060V17**14 | 29,800 | 11.5 | 14.0 | 30,200 | 3.50 | 8.0 | 18,200 | 2.42 |
| 4807888 | 25HCB330A30 | CSPH*3012A** | 59*N*A080V17**14 | 30,000 | 11.7 | 14.2 | 30,200 | 3.56 | 8.0 | 18,100 | 2.44 |
| 4807889 | 25HCB330A30 | CSPH*3012A** | 59*N*A100V21**20 | 30,200 | 11.7 | 14.2 | 30,400 | 3.60 | 8.2 | 18,200 | 2.46 |
| 4807890 | 25HCB330A30 | CSPH*3012A** | 59*N*A120V24**22 | 30,000 | 11.8 | 14.5 | 30,200 | 3.58 | 8.2 | 18,100 | 2.46 |
| 4807891 | 25HCB330A30 | CSPH*3012A** | 59*P5A060E17**14 | 30,000 | 11.6 | 14.0 | 30,400 | 3.56 | 8.0 | 18,200 | 2.44 |
| 4807892 | 25HCB330A30 | CSPH*3012A** | 59*P5A080E17**16 | 30,200 | 11.7 | 14.2 | 30,600 | 3.64 | 8.2 | 18,300 | 2.46 |
| 4209758 | 25HCB330A30 | CSPH*3012A** | OVLAAB036098 | 29,800 | 11.2 | 13.5 | 30,000 | 3.54 | 8.0 | 18,200 | 2.44 |
| 4209760 | 25HCB330A30 | CSPH*3012A** | OVLAAB048112 | 30,000 | 11.5 | 14.0 | 30,000 | 3.62 | 8.3 | 18,300 | 2.48 |
| 4209757 | 25HCB330A30 | CSPH*3012A** | OVMAAB036098 | 30,000 | 11.2 | 13.5 | 30,000 | 3.56 | 8.2 | 18,200 | 2.44 |
| 4209759 | 25HCB330A30 | CSPH*3012A** | OVMAAB042112 | 30,000 | 11.5 | 14.0 | 30,000 | 3.58 | 8.1 | 18,100 | 2.46 |
| 3033581 | 25HCB330A30 | CSPH*3012A**+TDR | | 30,000 | 10.8 | 13.0 | 30,000 | 3.50 | 8.0 | 18,800 | 2.40 |
| 3033600 | 25HCB330A30 | CSPH*3612A** | 58CV(A,X)070−12 | 30,000 | 11.5 | 14.0 | 30,000 | 3.60 | 8.2 | 18,100 | 2.48 |
| 3033601 | 25HCB330A30 | CSPH*3612A** | 58CV(A,X)090−16 | 30,000 | 12.0 | 14.0 | 30,000 | 3.62 | 8.2 | 18,000 | 2.50 |
| 3033602 | 25HCB330A30 | CSPH*3612A** | 58CV(A,X)110−20 | 30,000 | 12.0 | 14.0 | 30,000 | 3.64 | 8.2 | 18,000 | 2.50 |
| 3033603 | 25HCB330A30 | CSPH*3612A** | 58CV(A,X)135−22 | 30,000 | 12.0 | 14.0 | 30,000 | 3.64 | 8.2 | 18,000 | 2.50 |
| 3033604 | 25HCB330A30 | CSPH*3612A** | 58CV(A,X)155−22 | 30,000 | 12.0 | 14.0 | 30,000 | 3.64 | 8.2 | 17,900 | 2.52 |
| 3684983 | 25HCB330A30 | CSPH*3612A** | 58HDV040−−12 | 30,000 | 11.2 | 13.5 | 29,800 | 3.60 | 8.1 | 18,400 | 2.48 |
| 3684984 | 25HCB330A30 | CSPH*3612A** | 58HDV060−−12 | 30,000 | 11.2 | 13.5 | 29,800 | 3.68 | 8.2 | 18,400 | 2.50 |
| 3684985 | 25HCB330A30 | CSPH*3612A** | 58HDV080−−20 | 30,000 | 11.5 | 14.0 | 29,800 | 3.80 | 8.2 | 18,400 | 2.56 |
| 3684986 | 25HCB330A30 | CSPH*3612A** | 58HDV100−−20 | 30,000 | 11.5 | 14.0 | 29,600 | 3.72 | 8.2 | 18,200 | 2.54 |
| 3618354 | 25HCB330A30 | CSPH*3612A** | 58ME(B,C)040−12 | 30,000 | 12.0 | 14.5 | 30,000 | 3.76 | 8.3 | 18,100 | 2.54 |
| 3121423 | 25HCB330A30 | CSPH*3612A** | 58ME(B,C)060−12 | 30,000 | 12.0 | 14.5 | 30,000 | 3.78 | 8.3 | 18,200 | 2.56 |
| 3121424 | 25HCB330A30 | CSPH*3612A** | 58ME(B,C)080−12 | 30,000 | 12.0 | 14.5 | 30,000 | 3.74 | 8.3 | 18,100 | 2.54 |
| 3121425 | 25HCB330A30 | CSPH*3612A** | 58ME(B,C)080−16 | 30,000 | 11.5 | 14.5 | 30,000 | 3.80 | 8.4 | 18,300 | 2.56 |
| 3121422 | 25HCB330A30 | CSPH*3612A** | 58MEB040−12 | 30,000 | 12.0 | 14.5 | 30,000 | 3.76 | 8.3 | 18,100 | 2.54 |
| 3033595 | 25HCB330A30 | CSPH*3612A** | 58MV(B,C)060−14 | 30,000 | 11.5 | 14.0 | 30,000 | 3.58 | 8.2 | 18,000 | 2.48 |
| 3033596 | 25HCB330A30 | CSPH*3612A** | 58MV(B,C)080−14 | 30,000 | 11.5 | 14.0 | 30,000 | 3.60 | 8.2 | 18,100 | 2.48 |
| 3033597 | 25HCB330A30 | CSPH*3612A** | 58MV(B,C)080−20 | 30,000 | 11.5 | 14.0 | 30,000 | 3.60 | 8.2 | 18,000 | 2.48 |
| 3033598 | 25HCB330A30 | CSPH*3612A** | 58MV(B,C)100−20 | 30,000 | 12.0 | 14.0 | 30,000 | 3.62 | 8.2 | 18,000 | 2.50 |
| 3033599 | 25HCB330A30 | CSPH*3612A** | 58MV(B,C)120−20 | 30,000 | 12.0 | 14.0 | 30,000 | 3.58 | 8.2 | 18,000 | 2.48 |
| 3033526 | 25HCB330A30 | CSPH*3612A** | 58PH*070−16 | 30,000 | 11.5 | 14.0 | 30,000 | 3.68 | 8.2 | 18,300 | 2.50 |
| 3033527 | 25HCB330A30 | CSPH*3612A** | 58PH*090−16 | 30,000 | 12.0 | 14.5 | 30,000 | 3.72 | 8.3 | 18,200 | 2.52 |
| 3685002 | 25HCB330A30 | CSPH*3612A** | 58VLR105−12 | 29,600 | 11.5 | 14.0 | 30,000 | 3.66 | 8.3 | 18,100 | 2.52 |
| 3685001 | 25HCB330A30 | CSPH*3612A** | 58VMR105−12 | 30,000 | 11.5 | 14.0 | 29,800 | 3.54 | 8.0 | 17,900 | 2.46 |
| 4807893 | 25HCB330A30 | CSPH*3612A** | 59*N*A060V17**14 | 30,400 | 11.9 | 14.5 | 30,200 | 3.58 | 8.2 | 18,100 | 2.46 |
| 4807894 | 25HCB330A30 | CSPH*3612A** | 59*N*A080V17**14 | 30,600 | 12.0 | 14.5 | 30,400 | 3.62 | 8.2 | 18,100 | 2.48 |
| 4807895 | 25HCB330A30 | CSPH*3612A** | 59*N*A100V21**20 | 30,800 | 12.0 | 14.5 | 30,400 | 3.68 | 8.2 | 18,200 | 2.50 |
| 4807896 | 25HCB330A30 | CSPH*3612A** | 59*N*A120V24**22 | 30,600 | 12.0 | 14.5 | 30,200 | 3.66 | 8.2 | 18,100 | 2.50 |
| 4807897 | 25HCB330A30 | CSPH*3612A** | 59*P5A060E17**14 | 30,800 | 11.9 | 14.5 | 30,600 | 3.66 | 8.2 | 18,300 | 2.50 |
| 4807898 | 25HCB330A30 | CSPH*3612A** | 59*P5A080E17**16 | 31,000 | 12.0 | 14.5 | 30,600 | 3.74 | 8.2 | 18,400 | 2.52 |
| 4209762 | 25HCB330A30 | CSPH*3612A** | OVLAAB036098 | 30,000 | 11.5 | 14.5 | 30,000 | 3.62 | 8.3 | 18,100 | 2.48 |
| 4209764 | 25HCB330A30 | CSPH*3612A** | OVLAAB048112 | 30,000 | 11.5 | 14.5 | 30,000 | 3.70 | 8.5 | 18,200 | 2.52 |
| 4209761 | 25HCB330A30 | CSPH*3612A** | OVMAAB036098 | 30,000 | 11.5 | 14.0 | 30,000 | 3.62 | 8.3 | 18,200 | 2.48 |
| 4209763 | 25HCB330A30 | CSPH*3612A** | OVMAAB042112 | 30,000 | 12.0 | 14.5 | 30,000 | 3.68 | 8.4 | 18,000 | 2.52 |
| 3033593 | 25HCB330A30 | CSPH*3612A**+TDR | | 30,000 | 10.8 | 13.0 | 30,000 | 3.64 | 8.2 | 18,900 | 2.44 |
| 3685043 | 25HCB330A30 | FB4CNF030+TXV | | 30,000 | 11.2 | 13.5 | 30,000 | 3.58 | 8.0 | 18,300 | 2.46 |
| 3819202 | 25HCB330A30 | FB4CNF036 | | 30,000 | 11.0 | 13.0 | 30,000 | 3.58 | 8.0 | 18,300 | 2.44 |
| 3685044 | 25HCB330A30 | FB4CNF036+TXV | | 30,000 | 11.2 | 13.5 | 30,000 | 3.58 | 8.0 | 18,300 | 2.46 |
| 3033608 | 25HCB330A30 | FE4AN(B,F)003+UI | | 30,000 | 12.0 | 14.0 | 29,800 | 3.56 | 8.2 | 17,800 | 2.48 |
| 3033607 | 25HCB330A30 | FE4ANF002+UI | | 30,000 | 11.5 | 14.0 | 30,000 | 3.56 | 8.2 | 18,000 | 2.48 |
| 3033609 | 25HCB330A30 | FF1ENP030 | | 29,800 | 10.8 | 13.0 | 30,000 | 3.40 | 7.7 | 18,600 | 2.36 |
| 3463947 | 25HCB330A30 | FF1ENP031 | | 29,800 | 11.5 | 14.0 | 29,800 | 3.44 | 7.8 | 17,900 | 2.42 |
| 3033610 | 25HCB330A30 | FF1ENP036 | | 30,000 | 10.8 | 13.0 | 30,000 | 3.48 | 8.0 | 18,700 | 2.38 |
| 3463948 | 25HCB330A30 | FF1ENP037 | | 30,000 | 11.5 | 14.0 | 30,000 | 3.50 | 8.0 | 18,000 | 2.44 |
| 3405753 | 25HCB330A30 | FV4CN(B,F)003 | | 30,000 | 12.0 | 14.0 | 29,800 | 3.56 | 8.2 | 17,800 | 2.48 |
| 3405752 | 25HCB330A30 | FV4CNF002 | | 30,000 | 11.5 | 14.0 | 30,000 | 3.56 | 8.2 | 18,000 | 2.48 |
| 3685039 | 25HCB330A30 | FX4DN(B,F)031 | | 30,000 | 11.5 | 14.0 | 30,000 | 3.68 | 8.2 | 18,200 | 2.52 |
| 3685040 | 25HCB330A30 | FX4DN(B,F)037 | | 30,000 | 12.0 | 14.5 | 30,000 | 3.82 | 8.5 | 18,300 | 2.56 |
| 3819203 | 25HCB330A30 | FY5BNF030 | | 30,000 | 11.0 | 13.0 | 30,000 | 3.60 | 8.0 | 18,400 | 2.46 |
| 3685045 | 25HCB330A30 | FY5BNF030+TXV | | 30,000 | 11.2 | 13.5 | 30,000 | 3.60 | 8.1 | 18,500 | 2.46 |
| 3685046 | 25HCB330A30 | FY5BNF036+TXV | | 30,000 | 11.0 | 13.0 | 30,000 | 3.56 | 8.0 | 18,600 | 2.42 |
| | | | | | | | | | | | |
| 3853223 | 25HCB336A30 | †FY5BNF036 | | 34,000 | 11.0 | 13.0 | 34,000 | 3.64 | 8.0 | 21,400 | 2.52 |
| 3033717 | 25HCB336A30 | CAP**3614A** | 58CV(A,X)070−12 | 33,600 | 11.2 | 13.5 | 34,600 | 3.54 | 7.9 | 21,000 | 2.50 |
| 3033806 | 25HCB336A30 | CAP**3614A** | 58PH*045−08 | 33,600 | 11.0 | 13.0 | 35,000 | 3.50 | 7.9 | 21,400 | 2.46 |
| 3033716 | 25HCB336A30 | CAP**3614A**+TDR | | 33,600 | 10.8 | 13.0 | 35,200 | 3.52 | 7.8 | 21,600 | 2.46 |
| 3033720 | 25HCB336A30 | CAP**3617A** | 58CV(A,X)090−16 | 33,800 | 11.5 | 14.0 | 34,400 | 3.60 | 8.0 | 20,800 | 2.54 |
| 3618355 | 25HCB336A30 | CAP**3617A** | 58ME(B,C)040−12 | 34,000 | 11.5 | 14.0 | 34,600 | 3.64 | 8.1 | 21,000 | 2.56 |
| 3121427 | 25HCB336A30 | CAP**3617A** | 58ME(B,C)060−12 | 34,000 | 11.5 | 14.0 | 34,600 | 3.66 | 8.1 | 21,000 | 2.56 |
| 3121428 | 25HCB336A30 | CAP**3617A** | 58ME(B,C)080−12 | 34,000 | 11.5 | 14.0 | 34,600 | 3.64 | 8.1 | 21,000 | 2.56 |
| 3121429 | 25HCB336A30 | CAP**3617A** | 58ME(B,C)080−16 | 34,000 | 11.5 | 14.0 | 34,600 | 3.66 | 8.1 | 21,000 | 2.56 |
| 3121426 | 25HCB336A30 | CAP**3617A** | 58MEB040−12 | 34,000 | 11.5 | 14.0 | 34,600 | 3.64 | 8.1 | 21,000 | 2.56 |

See notes on pg. 35

# COMBINATION RATINGS CONTINUED

| AHRI Ref. No. | Model Number | Coil Model Number | Furnace Model Number | Cooling Capacity | EER | SEER | High Temp | | HSPF | Low Temp | |
|---|---|---|---|---|---|---|---|---|---|---|---|
| | | | | | | | E Capacity | E COP | | H Capacity | H COP |
| 3033719 | 25HCB336A30 | CAP**3617A** | 58MV(B,C)060−14 | 33,800 | 11.5 | 14.0 | 34,400 | 3.58 | 7.9 | 20,800 | 2.52 |
| 3033807 | 25HCB336A30 | CAP**3617A** | 58PH*070−16 | 33,800 | 11.2 | 13.5 | 34,800 | 3.58 | 7.9 | 21,200 | 2.50 |
| 3757437 | 25HCB336A30 | CAP**3617A** | 58UVB060−14 | 33,800 | 11.5 | 14.0 | 34,400 | 3.58 | 7.9 | 20,800 | 2.52 |
| 3685067 | 25HCB336A30 | CAP**3617A** | 58VLR105−12 | 33,600 | 11.2 | 13.5 | 34,600 | 3.62 | 8.0 | 21,000 | 2.54 |
| 3685066 | 25HCB336A30 | CAP**3617A** | 58VMR105−12 | 33,400 | 11.2 | 13.5 | 34,200 | 3.52 | 7.8 | 20,800 | 2.50 |
| 4807899 | 25HCB336A30 | CAP**3617A** | 59*N*A060V17**14 | 33,200 | 11.4 | 13.7 | 34,200 | 3.48 | 7.7 | 20,800 | 2.46 |
| 4807900 | 25HCB336A30 | CAP**3617A** | 59*N*A080V17**14 | 33,400 | 11.5 | 14.0 | 34,200 | 3.52 | 7.8 | 20,800 | 2.48 |
| 4807901 | 25HCB336A30 | CAP**3617A** | 59*P5A060E17**14 | 33,600 | 11.4 | 13.7 | 34,600 | 3.58 | 7.8 | 21,000 | 2.50 |
| 4807902 | 25HCB336A30 | CAP**3617A** | 59*P5A080E17**16 | 33,600 | 11.5 | 14.0 | 34,400 | 3.56 | 7.8 | 20,800 | 2.50 |
| 4209777 | 25HCB336A30 | CAP**3617A** | OVLAAB036098 | 33,400 | 11.2 | 13.5 | 34,400 | 3.54 | 7.8 | 21,000 | 2.48 |
| 4209776 | 25HCB336A30 | CAP**3617A** | OVMAAB036098 | 33,600 | 11.2 | 13.5 | 34,600 | 3.56 | 7.8 | 21,200 | 2.48 |
| 4209778 | 25HCB336A30 | CAP**3617A** | OVMAAB042112 | 33,600 | 11.2 | 14.0 | 34,400 | 3.60 | 8.0 | 21,000 | 2.52 |
| 3033718 | 25HCB336A30 | CAP**3617A**+TDR | | 33,800 | 10.8 | 13.0 | 35,400 | 3.56 | 7.9 | 21,800 | 2.46 |
| 3685050 | 25HCB336A30 | CAP**3619A** | 58HDV060−−12 | 33,600 | 11.0 | 13.2 | 35,000 | 3.60 | 8.0 | 21,200 | 2.50 |
| 4807915 | 25HCB336A30 | CAP**3619A** | 59*N*A060V17**14 | 33,200 | 11.4 | 13.7 | 34,200 | 3.48 | 7.7 | 20,800 | 2.46 |
| 4807916 | 25HCB336A30 | CAP**3619A** | 59*N*A080V17**14 | 33,400 | 11.5 | 14.0 | 34,200 | 3.52 | 7.8 | 20,800 | 2.48 |
| 4807917 | 25HCB336A30 | CAP**3619A** | 59*N*A100V21**20 | 33,600 | 11.8 | 14.2 | 34,200 | 3.56 | 7.8 | 20,800 | 2.50 |
| 4807918 | 25HCB336A30 | CAP**3619A** | 59*P5A060E17**14 | 33,600 | 11.4 | 13.7 | 34,600 | 3.58 | 7.8 | 21,000 | 2.50 |
| 4807919 | 25HCB336A30 | CAP**3619A** | 59*P5A080E17**16 | 33,600 | 11.5 | 14.0 | 34,400 | 3.56 | 7.8 | 20,800 | 2.50 |
| 3685134 | 25HCB336A30 | CAP**3619A**+TDR | | 33,800 | 10.8 | 13.0 | 35,400 | 3.58 | 7.9 | 21,800 | 2.48 |
| 3033725 | 25HCB336A30 | CAP**3621A** | 58CV(A,X)110−20 | 34,000 | 11.8 | 14.0 | 34,400 | 3.64 | 8.0 | 20,800 | 2.56 |
| 3121430 | 25HCB336A30 | CAP**3621A** | 58ME(B,C)100−20 | 34,200 | 11.5 | 14.5 | 34,400 | 3.66 | 8.1 | 20,800 | 2.58 |
| 3033722 | 25HCB336A30 | CAP**3621A** | 58MV(B,C)080−14 | 33,600 | 11.5 | 14.0 | 34,400 | 3.56 | 7.9 | 20,800 | 2.50 |
| 3033723 | 25HCB336A30 | CAP**3621A** | 58MV(B,C)080−20 | 33,800 | 11.5 | 14.0 | 34,400 | 3.60 | 8.0 | 20,800 | 2.54 |
| 3033724 | 25HCB336A30 | CAP**3621A** | 58MV(B,C)100−20 | 33,800 | 11.5 | 14.0 | 34,400 | 3.60 | 8.0 | 20,800 | 2.54 |
| 3033808 | 25HCB336A30 | CAP**3621A** | 58PH*090−16 | 34,200 | 11.5 | 14.3 | 34,600 | 3.68 | 8.1 | 20,800 | 2.58 |
| 3033809 | 25HCB336A30 | CAP**3621A** | 58PH*110−20 | 34,400 | 11.5 | 14.3 | 34,600 | 3.72 | 8.2 | 21,000 | 2.60 |
| 3757438 | 25HCB336A30 | CAP**3621A** | 58UVB080−14 | 33,600 | 11.5 | 14.0 | 34,400 | 3.56 | 7.9 | 20,800 | 2.50 |
| 3757439 | 25HCB336A30 | CAP**3621A** | 58UVB080−20 | 33,800 | 11.5 | 14.0 | 34,400 | 3.60 | 8.0 | 20,800 | 2.54 |
| 3757440 | 25HCB336A30 | CAP**3621A** | 58UVB100−20 | 33,800 | 11.5 | 14.0 | 34,400 | 3.60 | 8.0 | 20,800 | 2.54 |
| 3685069 | 25HCB336A30 | CAP**3621A** | 58VLR120−20 | 33,600 | 11.5 | 14.0 | 34,000 | 3.62 | 8.0 | 20,600 | 2.56 |
| 3685068 | 25HCB336A30 | CAP**3621A** | 58VMR120−20 | 33,600 | 11.5 | 14.0 | 34,200 | 3.58 | 8.0 | 20,800 | 2.54 |
| 4807903 | 25HCB336A30 | CAP**3621A** | 59*N*A060V17**14 | 33,400 | 11.5 | 14.0 | 34,200 | 3.50 | 7.8 | 20,800 | 2.48 |
| 4807904 | 25HCB336A30 | CAP**3621A** | 59*N*A080V17**14 | 33,400 | 11.8 | 14.2 | 34,200 | 3.54 | 7.8 | 20,600 | 2.50 |
| 4807905 | 25HCB336A30 | CAP**3621A** | 59*N*A100V21**20 | 33,600 | 11.8 | 14.2 | 34,200 | 3.58 | 7.8 | 20,800 | 2.52 |
| 4807906 | 25HCB336A30 | CAP**3621A** | 59*P5A060E17**14 | 33,800 | 11.4 | 13.7 | 34,800 | 3.60 | 8.0 | 21,000 | 2.50 |
| 4807907 | 25HCB336A30 | CAP**3621A** | 59*P5A080E17**16 | 33,600 | 11.8 | 14.2 | 34,400 | 3.60 | 7.8 | 20,800 | 2.52 |
| 4209779 | 25HCB336A30 | CAP**3621A** | OVLAAB048112 | 33,800 | 11.2 | 14.0 | 34,400 | 3.66 | 8.0 | 21,000 | 2.54 |
| 3033721 | 25HCB336A30 | CAP**3621A**+TDR | | 33,800 | 10.8 | 13.0 | 35,400 | 3.56 | 7.9 | 21,800 | 2.46 |
| 3033730 | 25HCB336A30 | CAP**4221A** | 58CV(A,X)110−20 | 34,200 | 11.5 | 14.0 | 34,400 | 3.68 | 8.1 | 20,800 | 2.58 |
| 3121431 | 25HCB336A30 | CAP**4221A** | 58ME(B,C)100−20 | 34,400 | 11.5 | 14.5 | 34,400 | 3.72 | 8.1 | 20,800 | 2.60 |
| 3033727 | 25HCB336A30 | CAP**4221A** | 58MV(B,C)080−14 | 33,800 | 11.5 | 14.0 | 34,400 | 3.60 | 8.0 | 21,000 | 2.52 |
| 3033728 | 25HCB336A30 | CAP**4221A** | 58MV(B,C)080−20 | 34,000 | 11.5 | 14.0 | 34,400 | 3.64 | 8.1 | 20,800 | 2.56 |
| 3033729 | 25HCB336A30 | CAP**4221A** | 58MV(B,C)100−20 | 34,000 | 11.5 | 14.0 | 34,400 | 3.66 | 8.1 | 20,800 | 2.56 |
| 3033810 | 25HCB336A30 | CAP**4221A** | 58PH*090−16 | 34,400 | 11.5 | 14.3 | 34,400 | 3.76 | 8.2 | 21,000 | 2.60 |
| 3033811 | 25HCB336A30 | CAP**4221A** | 58PH*110−20 | 34,600 | 12.0 | 14.5 | 34,600 | 3.78 | 8.2 | 21,000 | 2.62 |
| 3757441 | 25HCB336A30 | CAP**4221A** | 58UVB080−14 | 33,800 | 11.5 | 14.0 | 34,400 | 3.60 | 8.0 | 21,000 | 2.52 |
| 3757442 | 25HCB336A30 | CAP**4221A** | 58UVB080−20 | 34,000 | 11.5 | 14.0 | 34,400 | 3.64 | 8.1 | 20,800 | 2.56 |
| 3757443 | 25HCB336A30 | CAP**4221A** | 58UVB100−20 | 34,000 | 11.5 | 14.0 | 34,400 | 3.66 | 8.1 | 20,800 | 2.56 |
| 3685071 | 25HCB336A30 | CAP**4221A** | 58VLR120−20 | 34,000 | 11.5 | 14.0 | 34,200 | 3.68 | 8.1 | 20,800 | 2.58 |
| 3685070 | 25HCB336A30 | CAP**4221A** | 58VMR120−20 | 33,600 | 11.5 | 14.0 | 34,400 | 3.64 | 8.1 | 20,800 | 2.56 |
| 4807908 | 25HCB336A30 | CAP**4221A** | 59*N*A060V17**14 | 33,600 | 11.5 | 14.0 | 34,200 | 3.56 | 7.8 | 20,800 | 2.50 |
| 4807909 | 25HCB336A30 | CAP**4221A** | 59*N*A080V17**14 | 33,600 | 11.8 | 14.2 | 34,200 | 3.60 | 7.8 | 20,800 | 2.52 |
| 4807910 | 25HCB336A30 | CAP**4221A** | 59*N*A100V21**20 | 33,800 | 11.8 | 14.2 | 34,400 | 3.64 | 8.0 | 20,800 | 2.54 |
| 4807911 | 25HCB336A30 | CAP**4221A** | 59*P5A060E17**14 | 34,000 | 11.5 | 14.0 | 34,800 | 3.66 | 8.0 | 21,200 | 2.52 |
| 4807912 | 25HCB336A30 | CAP**4221A** | 59*P5A080E17**16 | 34,000 | 11.8 | 14.2 | 34,400 | 3.66 | 8.0 | 21,000 | 2.54 |
| 4209780 | 25HCB336A30 | CAP**4221A** | OVLAAB048112 | 34,000 | 11.5 | 14.0 | 34,600 | 3.72 | 8.0 | 21,200 | 2.56 |
| 3033726 | 25HCB336A30 | CAP**4221A**+TDR | | 34,200 | 10.8 | 13.0 | 35,400 | 3.60 | 8.0 | 21,800 | 2.48 |
| 3033734 | 25HCB336A30 | CAP**4224A** | 58CV(A,X)135−22 | 34,200 | 11.7 | 14.5 | 34,200 | 3.70 | 8.2 | 20,800 | 2.58 |
| 3033735 | 25HCB336A30 | CAP**4224A** | 58CV(A,X)155−22 | 34,200 | 11.7 | 14.5 | 34,200 | 3.72 | 8.2 | 20,600 | 2.60 |
| 3685049 | 25HCB336A30 | CAP**4224A** | 58HDV100−−20 | 34,400 | 11.5 | 14.0 | 34,800 | 3.78 | 8.3 | 21,200 | 2.60 |
| 3033733 | 25HCB336A30 | CAP**4224A** | 58MV(B,C)120−20 | 34,000 | 11.5 | 14.0 | 34,200 | 3.66 | 8.1 | 20,800 | 2.56 |
| 3757444 | 25HCB336A30 | CAP**4224A** | 58UVB040−14 | 34,000 | 11.5 | 14.0 | 34,400 | 3.62 | 8.0 | 20,800 | 2.54 |
| 3757445 | 25HCB336A30 | CAP**4224A** | 58UVB120−20 | 34,000 | 11.5 | 14.0 | 34,200 | 3.66 | 8.1 | 20,800 | 2.56 |
| 4807913 | 25HCB336A30 | CAP**4224A** | 59*N*A100V21**20 | 33,800 | 11.8 | 14.2 | 34,400 | 3.64 | 8.0 | 20,800 | 2.54 |
| 4807914 | 25HCB336A30 | CAP**4224A** | 59*N*A120V24**22 | 33,800 | 12.0 | 14.5 | 34,200 | 3.66 | 8.0 | 20,600 | 2.56 |
| 3033731 | 25HCB336A30 | CAP**4224A**+TDR | | 34,200 | 10.8 | 13.0 | 35,400 | 3.60 | 8.0 | 21,800 | 2.48 |
| 3685095 | 25HCB336A30 | CAP**4823A** | 58HDV040−−12 | 34,400 | 11.2 | 13.5 | 34,200 | 3.64 | 7.9 | 21,600 | 2.54 |
| 3685096 | 25HCB336A30 | CAP**4823A** | 58HDV060−−12 | 34,800 | 11.2 | 13.5 | 34,000 | 3.72 | 8.1 | 21,600 | 2.58 |
| 3685097 | 25HCB336A30 | CAP**4823A** | 58HDV080−−20 | 35,200 | 11.5 | 14.0 | 34,000 | 3.82 | 8.3 | 21,600 | 2.64 |
| 3685135 | 25HCB336A30 | CAP**4823A**+TDR | | 34,800 | 11.0 | 13.0 | 34,400 | 3.66 | 8.0 | 22,000 | 2.54 |
| 3033756 | 25HCB336A30 | CNPH*3617A** | 58CV(A,X)070−12 | 33,600 | 11.2 | 13.5 | 34,400 | 3.52 | 7.8 | 21,000 | 2.50 |
| 3033757 | 25HCB336A30 | CNPH*3617A** | 58CV(A,X)090−16 | 33,800 | 11.5 | 14.0 | 34,400 | 3.56 | 7.9 | 20,800 | 2.52 |
| 3033758 | 25HCB336A30 | CNPH*3617A** | 58CV(A,X)110−20 | 33,800 | 11.5 | 14.0 | 34,400 | 3.58 | 7.9 | 20,800 | 2.52 |
| 3033759 | 25HCB336A30 | CNPH*3617A** | 58CV(A,X)135−22 | 33,800 | 11.5 | 14.0 | 34,400 | 3.58 | 7.9 | 20,800 | 2.54 |
| 3033760 | 25HCB336A30 | CNPH*3617A** | 58CV(A,X)155−22 | 33,800 | 11.5 | 14.0 | 34,200 | 3.60 | 8.0 | 20,800 | 2.54 |
| 3685051 | 25HCB336A30 | CNPH*3617A** | 58HDV060−−12 | 33,400 | 11.0 | 13.2 | 35,000 | 3.52 | 7.8 | 21,200 | 2.48 |
| 3685052 | 25HCB336A30 | CNPH*3617A** | 58HDV080−−20 | 33,800 | 11.2 | 13.5 | 35,000 | 3.64 | 8.1 | 21,200 | 2.54 |
| 3685053 | 25HCB336A30 | CNPH*3617A** | 58HDV100−−20 | 33,800 | 11.2 | 13.5 | 34,600 | 3.60 | 8.0 | 21,000 | 2.54 |

See notes on pg. 35

# COMBINATION RATINGS CONTINUED

| AHRI Ref. No. | Model Number | Coil Model Number | Furnace Model Number | Cooling Capacity | EER | SEER | High Temp | | HSPF | Low Temp | |
|---|---|---|---|---|---|---|---|---|---|---|---|
| | | | | | | | E Capacity | E COP | | H Capacity | H COP |
| 3618358 | 25HCB336A30 | CNPH*3617A** | 58ME(B,C)040−12 | 33,800 | 11.5 | 14.0 | 34,600 | 3.60 | 8.0 | 20,800 | 2.54 |
| 3121447 | 25HCB336A30 | CNPH*3617A** | 58ME(B,C)060−12 | 33,800 | 11.5 | 14.0 | 34,600 | 3.58 | 8.0 | 21,000 | 2.54 |
| 3121448 | 25HCB336A30 | CNPH*3617A** | 58ME(B,C)080−12 | 33,800 | 11.5 | 14.0 | 34,600 | 3.58 | 8.0 | 20,800 | 2.52 |
| 3121449 | 25HCB336A30 | CNPH*3617A** | 58ME(B,C)080−16 | 33,800 | 11.5 | 14.0 | 34,600 | 3.58 | 8.0 | 21,000 | 2.52 |
| 3121450 | 25HCB336A30 | CNPH*3617A** | 58ME(B,C)100−20 | 33,800 | 11.5 | 14.0 | 34,200 | 3.56 | 8.0 | 20,600 | 2.54 |
| 3121446 | 25HCB336A30 | CNPH*3617A** | 58MEB040−12 | 33,800 | 11.5 | 14.0 | 34,600 | 3.60 | 8.0 | 20,800 | 2.54 |
| 3033751 | 25HCB336A30 | CNPH*3617A** | 58MV(B,C)060−14 | 33,600 | 11.5 | 14.0 | 34,400 | 3.54 | 7.9 | 20,800 | 2.52 |
| 3033752 | 25HCB336A30 | CNPH*3617A** | 58MV(B,C)080−14 | 33,400 | 11.2 | 13.5 | 34,400 | 3.50 | 7.8 | 21,000 | 2.48 |
| 3033753 | 25HCB336A30 | CNPH*3617A** | 58MV(B,C)080−20 | 33,600 | 11.5 | 14.0 | 34,400 | 3.54 | 7.9 | 20,800 | 2.50 |
| 3033754 | 25HCB336A30 | CNPH*3617A** | 58MV(B,C)100−20 | 33,600 | 11.5 | 14.0 | 34,400 | 3.56 | 7.9 | 20,800 | 2.52 |
| 3033755 | 25HCB336A30 | CNPH*3617A** | 58MV(B,C)120−20 | 33,600 | 11.5 | 14.0 | 34,400 | 3.54 | 7.9 | 20,800 | 2.52 |
| 3033817 | 25HCB336A30 | CNPH*3617A** | 58PH*045−08 | 33,600 | 11.0 | 13.0 | 35,000 | 3.48 | 7.9 | 21,400 | 2.46 |
| 3033818 | 25HCB336A30 | CNPH*3617A** | 58PH*070−16 | 33,600 | 11.0 | 13.5 | 34,600 | 3.52 | 7.9 | 21,000 | 2.48 |
| 3033819 | 25HCB336A30 | CNPH*3617A** | 58PH*090−16 | 33,800 | 11.5 | 14.0 | 34,400 | 3.58 | 8.0 | 20,800 | 2.54 |
| 3033820 | 25HCB336A30 | CNPH*3617A** | 58PH*110−20 | 34,000 | 11.5 | 14.3 | 34,400 | 3.62 | 8.0 | 20,800 | 2.56 |
| 3685080 | 25HCB336A30 | CNPH*3617A** | 58VLR105−12 | 33,400 | 11.2 | 13.5 | 34,600 | 3.56 | 7.9 | 21,000 | 2.52 |
| 3685082 | 25HCB336A30 | CNPH*3617A** | 58VLR120−20 | 33,600 | 11.5 | 14.0 | 34,200 | 3.56 | 7.9 | 20,800 | 2.54 |
| 3998990 | 25HCB336A30 | CNPH*3617A** | 58VMR105−12 | 33,000 | 11.2 | 13.5 | 34,200 | 3.52 | 7.8 | 20,800 | 2.48 |
| 3685081 | 25HCB336A30 | CNPH*3617A** | 58VMR120−20 | 33,400 | 11.2 | 13.5 | 34,200 | 3.54 | 7.9 | 20,800 | 2.52 |
| 4807944 | 25HCB336A30 | CNPH*3617A** | 59*N*A060V17**14 | 33,200 | 11.4 | 13.7 | 34,200 | 3.46 | 7.7 | 20,800 | 2.44 |
| 4807945 | 25HCB336A30 | CNPH*3617A** | 59*N*A080V17**14 | 33,200 | 11.5 | 14.0 | 34,200 | 3.48 | 7.7 | 20,800 | 2.48 |
| 4807946 | 25HCB336A30 | CNPH*3617A** | 59*N*A100V21**20 | 33,400 | 11.5 | 14.0 | 34,200 | 3.52 | 7.8 | 20,800 | 2.48 |
| 4807947 | 25HCB336A30 | CNPH*3617A** | 59*N*A120V24**22 | 33,400 | 11.8 | 14.2 | 34,200 | 3.54 | 7.8 | 20,800 | 2.50 |
| 4807948 | 25HCB336A30 | CNPH*3617A** | 59*P5A060E17**14 | 33,400 | 11.4 | 13.7 | 34,600 | 3.52 | 7.8 | 21,000 | 2.48 |
| 4807949 | 25HCB336A30 | CNPH*3617A** | 59*P5A080E17**16 | 33,400 | 11.5 | 14.0 | 34,200 | 3.52 | 7.8 | 20,800 | 2.48 |
| 4209793 | 25HCB336A30 | CNPH*3617A** | OVLAAB036098 | 33,400 | 11.0 | 13.2 | 34,400 | 3.50 | 7.7 | 21,200 | 2.46 |
| 4209795 | 25HCB336A30 | CNPH*3617A** | OVLAAB048112 | 33,600 | 11.2 | 13.5 | 34,600 | 3.58 | 7.8 | 21,200 | 2.50 |
| 4209796 | 25HCB336A30 | CNPH*3617A** | OVLAAB060154 | 34,400 | 11.2 | 14.0 | 35,000 | 3.76 | 8.1 | 21,400 | 2.58 |
| 4209792 | 25HCB336A30 | CNPH*3617A** | OVMAAB036098 | 33,400 | 11.0 | 13.2 | 34,600 | 3.52 | 7.7 | 21,200 | 2.46 |
| 4209794 | 25HCB336A30 | CNPH*3617A** | OVMAAB042112 | 33,600 | 11.2 | 13.5 | 34,400 | 3.56 | 7.8 | 21,000 | 2.50 |
| 3033749 | 25HCB336A30 | CNPH*3617A**+TDR | | 33,800 | 10.8 | 13.0 | 35,400 | 3.54 | 7.9 | 21,800 | 2.46 |
| 3033768 | 25HCB336A30 | CNPH*4221A** | 58CV(A,X)070−12 | 34,000 | 11.5 | 14.0 | 34,600 | 3.64 | 8.0 | 21,000 | 2.54 |
| 3033769 | 25HCB336A30 | CNPH*4221A** | 58CV(A,X)090−16 | 34,200 | 11.5 | 14.0 | 34,400 | 3.66 | 8.1 | 20,800 | 2.56 |
| 3033770 | 25HCB336A30 | CNPH*4221A** | 58CV(A,X)110−20 | 34,200 | 11.5 | 14.0 | 34,400 | 3.68 | 8.1 | 20,800 | 2.58 |
| 3033771 | 25HCB336A30 | CNPH*4221A** | 58CV(A,X)135−22 | 34,200 | 11.5 | 14.0 | 34,400 | 3.68 | 8.1 | 20,800 | 2.58 |
| 3033772 | 25HCB336A30 | CNPH*4221A** | 58CV(A,X)155−22 | 34,200 | 11.7 | 14.5 | 34,400 | 3.72 | 8.2 | 20,800 | 2.60 |
| 3685054 | 25HCB336A30 | CNPH*4221A** | 58HDV040−−12 | 33,400 | 11.0 | 13.2 | 35,200 | 3.58 | 8.0 | 21,400 | 2.48 |
| 3685055 | 25HCB336A30 | CNPH*4221A** | 58HDV060−−12 | 34,000 | 11.2 | 13.5 | 35,200 | 3.66 | 8.1 | 21,400 | 2.52 |
| 3685056 | 25HCB336A30 | CNPH*4221A** | 58HDV080−−20 | 34,400 | 11.2 | 13.5 | 35,200 | 3.76 | 8.3 | 21,400 | 2.58 |
| 3685057 | 25HCB336A30 | CNPH*4221A** | 58HDV100−−20 | 34,200 | 11.5 | 14.0 | 34,800 | 3.74 | 8.2 | 21,200 | 2.58 |
| 3618360 | 25HCB336A30 | CNPH*4221A** | 58ME(B,C)040−12 | 34,400 | 11.5 | 14.0 | 34,600 | 3.72 | 8.2 | 21,000 | 2.58 |
| 3121452 | 25HCB336A30 | CNPH*4221A** | 58ME(B,C)060−12 | 34,400 | 11.5 | 14.0 | 34,600 | 3.72 | 8.2 | 21,000 | 2.58 |
| 3121453 | 25HCB336A30 | CNPH*4221A** | 58ME(B,C)080−12 | 34,400 | 11.5 | 14.0 | 34,600 | 3.70 | 8.2 | 21,000 | 2.58 |
| 3121454 | 25HCB336A30 | CNPH*4221A** | 58ME(B,C)080−16 | 34,400 | 11.5 | 14.0 | 34,600 | 3.72 | 8.2 | 21,000 | 2.58 |
| 3121455 | 25HCB336A30 | CNPH*4221A** | 58ME(B,C)100−20 | 34,200 | 11.5 | 14.5 | 34,400 | 3.70 | 8.2 | 20,800 | 2.58 |
| 3121451 | 25HCB336A30 | CNPH*4221A** | 58MEB040−12 | 34,400 | 11.5 | 14.0 | 34,600 | 3.72 | 8.2 | 21,000 | 2.58 |
| 3033763 | 25HCB336A30 | CNPH*4221A** | 58MV(B,C)060−14 | 34,000 | 11.5 | 14.0 | 34,400 | 3.64 | 8.1 | 20,800 | 2.56 |
| 3033764 | 25HCB336A30 | CNPH*4221A** | 58MV(B,C)080−14 | 33,800 | 11.5 | 14.0 | 34,600 | 3.60 | 8.0 | 21,000 | 2.52 |
| 3033765 | 25HCB336A30 | CNPH*4221A** | 58MV(B,C)080−20 | 34,000 | 11.5 | 14.0 | 34,400 | 3.64 | 8.1 | 21,000 | 2.54 |
| 3033766 | 25HCB336A30 | CNPH*4221A** | 58MV(B,C)100−20 | 34,000 | 11.5 | 14.0 | 34,400 | 3.66 | 8.1 | 20,800 | 2.56 |
| 3033767 | 25HCB336A30 | CNPH*4221A** | 58MV(B,C)120−20 | 34,000 | 11.5 | 14.0 | 34,400 | 3.66 | 8.1 | 20,800 | 2.56 |
| 3033821 | 25HCB336A30 | CNPH*4221A** | 58PH*045−08 | 34,000 | 11.0 | 13.5 | 35,000 | 3.60 | 8.0 | 21,400 | 2.50 |
| 3033822 | 25HCB336A30 | CNPH*4221A** | 58PH*070−16 | 34,000 | 11.0 | 13.5 | 34,800 | 3.64 | 8.0 | 21,200 | 2.52 |
| 3033823 | 25HCB336A30 | CNPH*4221A** | 58PH*090−16 | 34,400 | 11.5 | 14.3 | 34,600 | 3.72 | 8.0 | 21,000 | 2.58 |
| 3033824 | 25HCB336A30 | CNPH*4221A** | 58PH*110−20 | 34,400 | 11.5 | 14.3 | 34,600 | 3.76 | 8.0 | 21,000 | 2.60 |
| 3685084 | 25HCB336A30 | CNPH*4221A** | 58VLR105−12 | 34,000 | 11.5 | 14.0 | 34,600 | 3.68 | 8.1 | 21,200 | 2.56 |
| 3685086 | 25HCB336A30 | CNPH*4221A** | 58VLR120−20 | 34,000 | 11.5 | 14.0 | 34,200 | 3.68 | 8.0 | 20,800 | 2.58 |
| 3685083 | 25HCB336A30 | CNPH*4221A** | 58VMR105−12 | 33,600 | 11.5 | 14.0 | 24,200 | 3.60 | 8.0 | 20,800 | 2.54 |
| 3685085 | 25HCB336A30 | CNPH*4221A** | 58VMR120−20 | 33,600 | 11.5 | 14.0 | 34,200 | 3.64 | 8.0 | 20,800 | 2.56 |
| 4807950 | 25HCB336A30 | CNPH*4221A** | 59*N*A060V17**14 | 33,600 | 11.5 | 14.0 | 34,400 | 3.54 | 7.8 | 21,000 | 2.48 |
| 4807951 | 25HCB336A30 | CNPH*4221A** | 59*N*A080V17**14 | 33,600 | 11.8 | 14.2 | 34,200 | 3.58 | 7.8 | 20,800 | 2.52 |
| 4807952 | 25HCB336A30 | CNPH*4221A** | 59*N*A100V21**20 | 33,800 | 11.8 | 14.2 | 34,400 | 3.64 | 8.0 | 20,800 | 2.52 |
| 4807953 | 25HCB336A30 | CNPH*4221A** | 59*N*A120V24**22 | 33,800 | 11.8 | 14.2 | 34,200 | 3.64 | 8.0 | 20,800 | 2.54 |
| 4807954 | 25HCB336A30 | CNPH*4221A** | 59*P5A060E17**14 | 34,000 | 11.4 | 13.7 | 34,800 | 3.64 | 8.0 | 21,200 | 2.52 |
| 4807955 | 25HCB336A30 | CNPH*4221A** | 59*P5A080E17**16 | 33,800 | 11.8 | 14.2 | 34,600 | 3.64 | 8.0 | 21,000 | 2.52 |
| 4209798 | 25HCB336A30 | CNPH*4221A** | OVLAAB036098 | 33,800 | 11.2 | 13.5 | 34,600 | 3.60 | 7.8 | 21,200 | 2.50 |
| 4209800 | 25HCB336A30 | CNPH*4221A** | OVLAAB048112 | 34,000 | 11.2 | 13.5 | 34,600 | 3.70 | 8.0 | 21,200 | 2.54 |
| 4209801 | 25HCB336A30 | CNPH*4221A** | OVLAAB060154 | 34,800 | 11.5 | 14.5 | 34,800 | 3.88 | 8.2 | 21,400 | 2.62 |
| 4209797 | 25HCB336A30 | CNPH*4221A** | OVMAAB036098 | 33,800 | 11.2 | 13.5 | 34,600 | 3.62 | 8.0 | 21,200 | 2.50 |
| 4209799 | 25HCB336A30 | CNPH*4221A** | OVMAAB042112 | 34,000 | 11.5 | 14.0 | 34,400 | 3.68 | 8.0 | 21,000 | 2.54 |
| 3033761 | 25HCB336A30 | CNPH*4221A**+TDR | | 34,200 | 10.8 | 13.0 | 35,400 | 3.62 | 8.0 | 21,800 | 2.50 |
| 3685118 | 25HCB336A30 | CNPH*4321A** | 58CV(A,X)070−12 | 35,000 | 12.0 | 14.5 | 34,200 | 3.82 | 8.2 | 21,200 | 2.62 |
| 3685119 | 25HCB336A30 | CNPH*4321A** | 58CV(A,X)090−16 | 35,000 | 12.0 | 14.5 | 34,200 | 3.86 | 8.5 | 21,000 | 2.66 |
| 3685120 | 25HCB336A30 | CNPH*4321A** | 58CV(A,X)110−20 | 35,000 | 12.0 | 14.5 | 34,200 | 3.88 | 8.5 | 21,000 | 2.66 |
| 3685121 | 25HCB336A30 | CNPH*4321A** | 58CV(A,X)135−22 | 35,000 | 12.2 | 15.0 | 34,000 | 3.90 | 8.5 | 21,000 | 2.68 |
| 3685122 | 25HCB336A30 | CNPH*4321A** | 58CV(A,X)155−22 | 35,000 | 12.2 | 15.0 | 34,000 | 3.92 | 8.5 | 20,800 | 2.70 |
| 3685141 | 25HCB336A30 | CNPH*4321A** | 58HDV040−−12 | 35,000 | 11.2 | 13.5 | 34,600 | 3.76 | 8.1 | 21,600 | 2.58 |
| 3685142 | 25HCB336A30 | CNPH*4321A** | 58HDV060−−12 | 35,400 | 11.5 | 14.0 | 34,400 | 3.84 | 8.3 | 21,600 | 2.62 |
| 3685143 | 25HCB336A30 | CNPH*4321A** | 58HDV080−−20 | 35,800 | 11.5 | 14.5 | 34,200 | 3.94 | 8.5 | 21,600 | 2.68 |

See notes on pg. 35

# COMBINATION RATINGS CONTINUED

| AHRI Ref. No. | Model Number | Coil Model Number | Furnace Model Number | Cooling Capacity | EER | SEER | High Temp | | HSPF | Low Temp | |
|---|---|---|---|---|---|---|---|---|---|---|---|
| | | | | | | | E Capacity | E COP | | H Capacity | H COP |
| 3685144 | 25HCB336A30 | CNPH*4321A** | 58HDV100−−20 | 35,600 | 12.0 | 14.5 | 34,200 | 3.94 | 8.5 | 21,400 | 2.70 |
| 3685128 | 25HCB336A30 | CNPH*4321A** | 58ME(B,C)060−12 | 35,000 | 12.0 | 14.5 | 34,200 | 3.94 | 8.5 | 21,200 | 2.68 |
| 3685129 | 25HCB336A30 | CNPH*4321A** | 58ME(B,C)080−12 | 35,000 | 12.0 | 14.5 | 34,200 | 3.92 | 8.5 | 21,200 | 2.68 |
| 3685130 | 25HCB336A30 | CNPH*4321A** | 58ME(B,C)080−16 | 35,000 | 12.0 | 14.5 | 34,200 | 3.92 | 8.5 | 21,200 | 2.68 |
| 3685131 | 25HCB336A30 | CNPH*4321A** | 58ME(B,C)100−20 | 35,000 | 12.2 | 15.0 | 34,000 | 3.94 | 8.5 | 21,000 | 2.70 |
| 3685127 | 25HCB336A30 | CNPH*4321A** | 58MEB040−12 | 35,000 | 12.0 | 14.5 | 34,200 | 3.92 | 8.5 | 21,200 | 2.68 |
| 3685113 | 25HCB336A30 | CNPH*4321A** | 58MV(B,C)060−14 | 35,000 | 12.0 | 14.5 | 34,200 | 3.90 | 8.5 | 21,200 | 2.66 |
| 3685114 | 25HCB336A30 | CNPH*4321A** | 58MV(B,C)080−14 | 35,000 | 12.0 | 14.5 | 34,200 | 3.84 | 8.5 | 21,200 | 2.64 |
| 3685115 | 25HCB336A30 | CNPH*4321A** | 58MV(B,C)080−20 | 35,000 | 12.0 | 14.5 | 34,200 | 3.84 | 8.5 | 21,000 | 2.64 |
| 3685116 | 25HCB336A30 | CNPH*4321A** | 58MV(B,C)100−20 | 35,000 | 12.0 | 14.5 | 34,200 | 3.88 | 8.5 | 21,200 | 2.66 |
| 3685117 | 25HCB336A30 | CNPH*4321A** | 58MV(B,C)120−20 | 35,000 | 12.0 | 14.5 | 34,000 | 3.88 | 8.5 | 21,000 | 2.66 |
| 3685112 | 25HCB336A30 | CNPH*4321A** | 58MVB040−14 | 35,000 | 11.5 | 14.5 | 34,200 | 3.82 | 8.2 | 21,200 | 2.62 |
| 3685123 | 25HCB336A30 | CNPH*4321A** | 58PH*045−08 | 35,000 | 11.2 | 13.5 | 34,600 | 3.78 | 8.2 | 21,600 | 2.60 |
| 3685124 | 25HCB336A30 | CNPH*4321A** | 58PH*070−16 | 35,000 | 11.5 | 14.0 | 34,400 | 3.84 | 8.2 | 21,400 | 2.62 |
| 3685125 | 25HCB336A30 | CNPH*4321A** | 58PH*090−16 | 35,000 | 12.0 | 14.5 | 34,200 | 3.94 | 8.5 | 21,200 | 2.70 |
| 3685126 | 25HCB336A30 | CNPH*4321A** | 58PH*110−20 | 35,000 | 12.2 | 15.0 | 34,000 | 3.98 | 8.5 | 21,200 | 2.72 |
| 4807956 | 25HCB336A30 | CNPH*4321A** | 59*N*A060V17**14 | 34,600 | 12.0 | 14.5 | 34,200 | 3.76 | 8.2 | 21,000 | 2.58 |
| 4807957 | 25HCB336A30 | CNPH*4321A** | 59*N*A080V17**14 | 34,600 | 12.0 | 14.5 | 34,200 | 3.80 | 8.2 | 21,000 | 2.60 |
| 4807958 | 25HCB336A30 | CNPH*4321A** | 59*N*A100V21**20 | 34,800 | 12.0 | 14.5 | 34,200 | 3.84 | 8.2 | 21,000 | 2.62 |
| 4807959 | 25HCB336A30 | CNPH*4321A** | 59*N*A120V24**22 | 34,800 | 12.4 | 15.0 | 34,000 | 3.86 | 8.2 | 21,000 | 2.64 |
| 4807960 | 25HCB336A30 | CNPH*4321A** | 59*P5A060E17**14 | 35,000 | 11.8 | 14.2 | 34,400 | 3.84 | 8.2 | 21,400 | 2.62 |
| 4807961 | 25HCB336A30 | CNPH*4321A** | 59*P5A080E17**16 | 35,000 | 12.0 | 14.5 | 34,200 | 3.86 | 8.2 | 21,200 | 2.62 |
| 4209803 | 25HCB336A30 | CNPH*4321A** | OVLAAB036098 | 34,800 | 11.5 | 14.5 | 34,200 | 3.80 | 8.4 | 21,400 | 2.60 |
| 4209805 | 25HCB336A30 | CNPH*4321A** | OVLAAB048112 | 35,200 | 12.0 | 14.5 | 34,200 | 3.90 | 8.5 | 21,400 | 2.64 |
| 4209806 | 25HCB336A30 | CNPH*4321A** | OVLAAB060154 | 36,000 | 12.0 | 14.5 | 33,800 | 4.02 | 8.8 | 21,600 | 2.72 |
| 4209802 | 25HCB336A30 | CNPH*4321A** | OVMAAB036098 | 34,800 | 11.5 | 14.5 | 34,200 | 3.82 | 8.4 | 21,400 | 2.60 |
| 4209804 | 25HCB336A30 | CNPH*4321A** | OVMAAB042112 | 35,000 | 12.0 | 14.5 | 34,000 | 3.88 | 8.4 | 21,200 | 2.64 |
| 3685111 | 25HCB336A30 | CNPH*4321A**+TDR | | 35,200 | 11.0 | 13.0 | 34,800 | 3.76 | 8.5 | 22,000 | 2.58 |
| 3033738 | 25HCB336A30 | CNPV*3617A** | 58CV(A,X)090−16 | 33,800 | 11.5 | 14.0 | 34,400 | 3.56 | 7.9 | 20,800 | 2.52 |
| 4209817 | 25HCB336A30 | CNPV*3617A** | 58HDV040−−12 | 33,200 | 11.0 | 13.0 | 34,600 | 3.48 | 7.7 | 21,400 | 2.44 |
| 4209818 | 25HCB336A30 | CNPV*3617A** | 58HDV060−−12 | 33,600 | 11.0 | 13.2 | 34,600 | 3.56 | 7.7 | 21,200 | 2.48 |
| 3618356 | 25HCB336A30 | CNPV*3617A** | 58ME(B,C)040−12 | 33,800 | 11.5 | 14.0 | 34,600 | 3.60 | 8.0 | 20,800 | 2.54 |
| 3121433 | 25HCB336A30 | CNPV*3617A** | 58ME(B,C)060−12 | 33,800 | 11.5 | 14.0 | 34,600 | 3.58 | 8.0 | 21,000 | 2.54 |
| 3121434 | 25HCB336A30 | CNPV*3617A** | 58ME(B,C)080−12 | 33,800 | 11.5 | 14.0 | 34,600 | 3.58 | 8.0 | 20,800 | 2.52 |
| 3121435 | 25HCB336A30 | CNPV*3617A** | 58ME(B,C)080−16 | 33,800 | 11.5 | 14.0 | 34,600 | 3.58 | 8.0 | 21,000 | 2.52 |
| 3121432 | 25HCB336A30 | CNPV*3617A** | 58MEB040−12 | 33,800 | 11.5 | 14.0 | 34,600 | 3.60 | 8.0 | 20,800 | 2.54 |
| 3033737 | 25HCB336A30 | CNPV*3617A** | 58MV(B,C)060−14 | 33,600 | 11.5 | 14.0 | 34,400 | 3.54 | 7.9 | 20,800 | 2.52 |
| 3033812 | 25HCB336A30 | CNPV*3617A** | 58PH*070−16 | 33,600 | 11.0 | 13.5 | 34,600 | 3.52 | 7.9 | 21,000 | 2.48 |
| 3758749 | 25HCB336A30 | CNPV*3617A** | 58UVB060−14 | 33,600 | 11.5 | 14.0 | 34,400 | 3.54 | 7.9 | 20,800 | 2.52 |
| 3685073 | 25HCB336A30 | CNPV*3617A** | 58VLR105−12 | 33,600 | 11.2 | 13.5 | 34,600 | 3.56 | 8.0 | 21,000 | 2.52 |
| 3685072 | 25HCB336A30 | CNPV*3617A** | 58VMR105−12 | 33,000 | 11.2 | 13.5 | 34,200 | 3.48 | 7.8 | 20,800 | 2.48 |
| 4807920 | 25HCB336A30 | CNPV*3617A** | 59*N*A060V17**14 | 33,200 | 11.4 | 13.7 | 34,200 | 3.46 | 7.7 | 20,800 | 2.44 |
| 4807921 | 25HCB336A30 | CNPV*3617A** | 59*N*A080V17**14 | 33,200 | 11.5 | 14.0 | 34,200 | 3.48 | 7.7 | 20,800 | 2.48 |
| 4807922 | 25HCB336A30 | CNPV*3617A** | 59*P5A060E17**14 | 33,400 | 11.4 | 13.7 | 34,600 | 3.52 | 7.8 | 21,000 | 2.48 |
| 4807923 | 25HCB336A30 | CNPV*3617A** | 59*P5A080E17**16 | 33,400 | 11.5 | 14.0 | 34,200 | 3.52 | 7.8 | 20,800 | 2.48 |
| 4209782 | 25HCB336A30 | CNPV*3617A** | OVLAAB036098 | 33,400 | 11.0 | 13.2 | 34,400 | 3.50 | 7.7 | 21,200 | 2.46 |
| 4209781 | 25HCB336A30 | CNPV*3617A** | OVMAAB036098 | 33,400 | 11.0 | 13.2 | 34,600 | 3.52 | 7.8 | 21,200 | 2.46 |
| 4209783 | 25HCB336A30 | CNPV*3617A** | OVMAAB042112 | 33,600 | 11.2 | 13.5 | 34,400 | 3.56 | 7.8 | 21,000 | 2.50 |
| 3033736 | 25HCB336A30 | CNPV*3617A**+TDR | | 33,800 | 10.8 | 13.0 | 35,400 | 3.56 | 7.9 | 21,800 | 2.46 |
| 3033743 | 25HCB336A30 | CNPV*3621A** | 58CV(A,X)110−20 | 33,800 | 11.5 | 14.0 | 34,400 | 3.58 | 7.9 | 20,800 | 2.54 |
| 4209819 | 25HCB336A30 | CNPV*3621A** | 58HDV040−−12 | 33,200 | 11.0 | 13.2 | 34,600 | 3.48 | 7.7 | 21,400 | 2.44 |
| 4209820 | 25HCB336A30 | CNPV*3621A** | 58HDV060−−12 | 33,600 | 11.2 | 13.5 | 34,600 | 3.56 | 7.7 | 21,200 | 2.48 |
| 4209821 | 25HCB336A30 | CNPV*3621A** | 58HDV080−−20 | 34,000 | 11.2 | 14.0 | 34,800 | 3.68 | 8.0 | 21,200 | 2.54 |
| 3121436 | 25HCB336A30 | CNPV*3621A** | 58ME(B,C)100−20 | 33,800 | 11.5 | 14.0 | 34,400 | 3.58 | 8.0 | 20,600 | 2.54 |
| 3033740 | 25HCB336A30 | CNPV*3621A** | 58MV(B,C)080−14 | 33,400 | 11.2 | 13.5 | 34,400 | 3.50 | 7.8 | 21,000 | 2.48 |
| 3033741 | 25HCB336A30 | CNPV*3621A** | 58MV(B,C)080−20 | 33,600 | 11.5 | 14.0 | 34,400 | 3.54 | 7.9 | 20,800 | 2.52 |
| 3033742 | 25HCB336A30 | CNPV*3621A** | 58MV(B,C)100−20 | 33,800 | 11.5 | 14.0 | 34,400 | 3.56 | 7.9 | 20,800 | 2.52 |
| 3033813 | 25HCB336A30 | CNPV*3621A** | 58PH*090−16 | 34,000 | 11.5 | 14.0 | 34,400 | 3.60 | 8.0 | 20,800 | 2.54 |
| 3033814 | 25HCB336A30 | CNPV*3621A** | 58PH*110−20 | 34,000 | 11.5 | 14.0 | 34,600 | 3.62 | 8.0 | 20,800 | 2.56 |
| 3758750 | 25HCB336A30 | CNPV*3621A** | 58UVB080−14 | 33,400 | 11.2 | 13.5 | 34,400 | 3.50 | 7.8 | 21,000 | 2.48 |
| 3758751 | 25HCB336A30 | CNPV*3621A** | 58UVB080−20 | 33,600 | 11.5 | 14.0 | 34,400 | 3.54 | 7.9 | 20,800 | 2.52 |
| 3758752 | 25HCB336A30 | CNPV*3621A** | 58UVB100−20 | 33,800 | 11.5 | 14.0 | 34,400 | 3.56 | 7.9 | 20,800 | 2.52 |
| 3685075 | 25HCB336A30 | CNPV*3621A** | 58VLR120−20 | 33,600 | 11.5 | 14.0 | 34,000 | 3.58 | 8.0 | 20,800 | 2.54 |
| 3685074 | 25HCB336A30 | CNPV*3621A** | 58VMR120−20 | 33,400 | 11.2 | 13.5 | 34,200 | 3.54 | 7.9 | 20,800 | 2.52 |
| 4807924 | 25HCB336A30 | CNPV*3621A** | 59*N*A060V17**14 | 33,200 | 11.4 | 13.7 | 34,200 | 3.46 | 7.7 | 20,800 | 2.46 |
| 4807925 | 25HCB336A30 | CNPV*3621A** | 59*N*A080V17**14 | 33,200 | 11.5 | 14.0 | 34,200 | 3.50 | 7.7 | 20,800 | 2.48 |
| 4807926 | 25HCB336A30 | CNPV*3621A** | 59*N*A100V21**20 | 33,400 | 11.5 | 14.0 | 34,200 | 3.52 | 7.8 | 20,800 | 2.50 |
| 4807927 | 25HCB336A30 | CNPV*3621A** | 59*P5A060E17**14 | 33,400 | 11.4 | 13.7 | 34,600 | 3.54 | 7.8 | 21,000 | 2.48 |
| 4807928 | 25HCB336A30 | CNPV*3621A** | 59*P5A080E17**16 | 33,400 | 11.5 | 14.0 | 34,200 | 3.52 | 7.8 | 20,800 | 2.50 |
| 4209784 | 25HCB336A30 | CNPV*3621A** | OVLAAB048112 | 33,600 | 11.2 | 13.5 | 34,600 | 3.60 | 7.8 | 21,200 | 2.50 |
| 3033739 | 25HCB336A30 | CNPV*3621A**+TDR | | 33,800 | 10.8 | 13.0 | 35,400 | 3.56 | 7.9 | 21,800 | 2.46 |
| 3685100 | 25HCB336A30 | CNPV*3717A** | 58CV(A,X)090−16 | 35,200 | 12.0 | 14.5 | 34,200 | 3.86 | 8.5 | 21,000 | 2.66 |
| 4209822 | 25HCB336A30 | CNPV*3717A** | 58HDV040−−12 | 34,800 | 11.2 | 13.5 | 34,400 | 3.76 | 8.2 | 21,600 | 2.56 |
| 4209823 | 25HCB336A30 | CNPV*3717A** | 58HDV060−−12 | 35,000 | 11.5 | 14.0 | 34,200 | 3.84 | 8.2 | 21,600 | 2.62 |
| 3685103 | 25HCB336A30 | CNPV*3717A** | 58ME(B,C)060−12 | 35,400 | 12.0 | 14.5 | 34,200 | 3.90 | 8.5 | 21,200 | 2.68 |
| 3685104 | 25HCB336A30 | CNPV*3717A** | 58ME(B,C)080−12 | 35,400 | 12.0 | 14.5 | 34,200 | 3.90 | 8.5 | 21,200 | 2.66 |
| 3685105 | 25HCB336A30 | CNPV*3717A** | 58ME(B,C)080−16 | 35,400 | 12.0 | 14.5 | 34,200 | 3.90 | 8.5 | 21,200 | 2.68 |
| 3685102 | 25HCB336A30 | CNPV*3717A** | 58MEB040−12 | 35,400 | 12.0 | 14.5 | 34,200 | 3.90 | 8.5 | 21,200 | 2.68 |
| 3685099 | 25HCB336A30 | CNPV*3717A** | 58MV(B,C)060−14 | 35,200 | 12.0 | 14.5 | 34,200 | 3.88 | 8.5 | 21,200 | 2.66 |

See notes on pg. 35

# COMBINATION RATINGS CONTINUED

| AHRI Ref. No. | Model Number | Coil Model Number | Furnace Model Number | Cooling Capacity | EER | SEER | High Temp | | HSPF | Low Temp | |
|---|---|---|---|---|---|---|---|---|---|---|---|
| | | | | | | | E Capacity | E COP | | H Capacity | H COP |
| 3685101 | 25HCB336A30 | CNPV*3717A** | 58PH*070−16 | 35,200 | 11.5 | 14.0 | 34,400 | 3.82 | 8.2 | 21,400 | 2.62 |
| 3685290 | 25HCB336A30 | CNPV*3717A** | 58UVB060−14 | 35,200 | 12.0 | 14.5 | 34,200 | 3.88 | 8.5 | 21,200 | 2.66 |
| 4807929 | 25HCB336A30 | CNPV*3717A** | 59*N*A060V17**14 | 34,400 | 11.8 | 14.2 | 34,200 | 3.76 | 8.2 | 21,000 | 2.56 |
| 4807930 | 25HCB336A30 | CNPV*3717A** | 59*N*A080V17**14 | 34,600 | 12.0 | 14.5 | 34,200 | 3.80 | 8.2 | 21,000 | 2.60 |
| 4807931 | 25HCB336A30 | CNPV*3717A** | 59*P5A060E17**14 | 35,000 | 11.8 | 14.2 | 34,400 | 3.82 | 8.2 | 21,400 | 2.60 |
| 4807932 | 25HCB336A30 | CNPV*3717A** | 59*P5A080E17**16 | 34,800 | 12.0 | 14.5 | 34,200 | 3.84 | 8.2 | 21,200 | 2.62 |
| 4209786 | 25HCB336A30 | CNPV*3717A** | OVLAAB036098 | 34,800 | 11.5 | 14.0 | 34,200 | 3.80 | 8.3 | 21,400 | 2.58 |
| 4209785 | 25HCB336A30 | CNPV*3717A** | OVMAAB036098 | 34,800 | 11.5 | 14.0 | 34,200 | 3.80 | 8.4 | 21,400 | 2.60 |
| 4209787 | 25HCB336A30 | CNPV*3717A** | OVMAAB042112 | 35,000 | 12.0 | 14.5 | 34,000 | 3.86 | 8.5 | 21,200 | 2.64 |
| 3685098 | 25HCB336A30 | CNPV*3717A**+TDR | | 35,200 | 11.0 | 13.0 | 34,800 | 3.76 | 8.1 | 22,000 | 2.58 |
| 3121439 | 25HCB336A30 | CNPV*4217A** | 58CV(A,X)090−16 | 34,400 | 11.5 | 14.5 | 34,400 | 3.74 | 8.2 | 21,000 | 2.58 |
| 4209824 | 25HCB336A30 | CNPV*4217A** | 58HDV040−−12 | 34,000 | 11.0 | 13.2 | 34,800 | 3.66 | 8.0 | 21,400 | 2.50 |
| 4209825 | 25HCB336A30 | CNPV*4217A** | 58HDV060−−12 | 34,400 | 11.2 | 14.0 | 34,800 | 3.74 | 8.2 | 21,400 | 2.54 |
| 3618357 | 25HCB336A30 | CNPV*4217A** | 58ME(B,C)040−12 | 34,600 | 11.5 | 14.5 | 34,400 | 3.78 | 8.3 | 21,000 | 2.60 |
| 3121442 | 25HCB336A30 | CNPV*4217A** | 58ME(B,C)060−12 | 34,600 | 11.5 | 14.0 | 34,600 | 3.78 | 8.3 | 21,200 | 2.60 |
| 3121443 | 25HCB336A30 | CNPV*4217A** | 58ME(B,C)080−12 | 34,600 | 11.5 | 14.5 | 34,400 | 3.76 | 8.3 | 21,000 | 2.60 |
| 3121444 | 25HCB336A30 | CNPV*4217A** | 58ME(B,C)080−16 | 34,600 | 11.5 | 14.0 | 34,600 | 3.78 | 8.3 | 21,200 | 2.60 |
| 3121441 | 25HCB336A30 | CNPV*4217A** | 58MEB040−12 | 34,600 | 11.5 | 14.5 | 34,400 | 3.78 | 8.3 | 21,000 | 2.60 |
| 3121438 | 25HCB336A30 | CNPV*4217A** | 58MV(B,C)060−14 | 34,600 | 11.5 | 14.0 | 34,600 | 3.76 | 8.2 | 21,000 | 2.60 |
| 3121440 | 25HCB336A30 | CNPV*4217A** | 58PH*070−16 | 34,400 | 11.0 | 14.0 | 34,600 | 3.70 | 8.2 | 21,200 | 2.56 |
| 3758815 | 25HCB336A30 | CNPV*4217A** | 58UVB060−14 | 34,600 | 11.5 | 14.0 | 34,600 | 3.76 | 8.2 | 21,000 | 2.60 |
| 3685077 | 25HCB336A30 | CNPV*4217A** | 58VLR105−12 | 34,200 | 11.5 | 14.0 | 34,600 | 3.74 | 8.1 | 21,200 | 2.58 |
| 3685076 | 25HCB336A30 | CNPV*4217A** | 58VMR105−12 | 34,000 | 11.5 | 14.0 | 34,400 | 3.66 | 8.0 | 21,000 | 2.56 |
| 4807933 | 25HCB336A30 | CNPV*4217A** | 59*N*A060V17**14 | 33,800 | 11.5 | 14.0 | 34,600 | 3.62 | 8.0 | 21,000 | 2.52 |
| 4807934 | 25HCB336A30 | CNPV*4217A** | 59*N*A080V17**14 | 34,000 | 11.8 | 14.2 | 34,400 | 3.66 | 8.0 | 21,000 | 2.54 |
| 4807935 | 25HCB336A30 | CNPV*4217A** | 59*P5A060E17**14 | 34,200 | 11.5 | 14.0 | 34,800 | 3.72 | 8.0 | 21,200 | 2.54 |
| 4807936 | 25HCB336A30 | CNPV*4217A** | 59*P5A080E17**16 | 34,200 | 11.8 | 14.2 | 34,600 | 3.70 | 8.0 | 21,000 | 2.56 |
| 4209789 | 25HCB336A30 | CNPV*4217A** | OVLAAB036098 | 34,000 | 11.2 | 14.0 | 34,600 | 3.68 | 8.0 | 21,200 | 2.52 |
| 4209788 | 25HCB336A30 | CNPV*4217A** | OVMAAB036098 | 34,200 | 11.2 | 13.5 | 34,600 | 3.70 | 8.0 | 21,200 | 2.54 |
| 4209790 | 25HCB336A30 | CNPV*4217A** | OVMAAB042112 | 34,200 | 11.5 | 14.0 | 34,600 | 3.74 | 8.2 | 21,200 | 2.56 |
| 3121437 | 25HCB336A30 | CNPV*4217A**+TDR | | 34,600 | 10.5 | 13.0 | 35,200 | 3.68 | 8.1 | 22,000 | 2.52 |
| 3033748 | 25HCB336A30 | CNPV*4221A** | 58CV(A,X)110−20 | 34,200 | 11.5 | 14.0 | 34,400 | 3.68 | 8.1 | 20,800 | 2.58 |
| 4209826 | 25HCB336A30 | CNPV*4221A** | 58HDV040−−12 | 33,800 | 11.0 | 13.2 | 34,800 | 3.60 | 7.8 | 21,400 | 2.48 |
| 4209827 | 25HCB336A30 | CNPV*4221A** | 58HDV060−−12 | 34,000 | 11.2 | 13.5 | 34,800 | 3.68 | 8.0 | 21,400 | 2.52 |
| 4209828 | 25HCB336A30 | CNPV*4221A** | 58HDV080−−20 | 34,400 | 11.5 | 14.0 | 34,800 | 3.80 | 8.2 | 21,400 | 2.58 |
| 3121445 | 25HCB336A30 | CNPV*4221A** | 58ME(B,C)100−20 | 34,200 | 11.5 | 14.5 | 34,400 | 3.70 | 8.2 | 20,800 | 2.58 |
| 3033745 | 25HCB336A30 | CNPV*4221A** | 58MV(B,C)080−14 | 33,800 | 11.5 | 14.0 | 34,600 | 3.60 | 8.0 | 21,000 | 2.52 |
| 3033746 | 25HCB336A30 | CNPV*4221A** | 58MV(B,C)080−20 | 34,000 | 11.5 | 14.0 | 34,600 | 3.64 | 8.1 | 21,000 | 2.54 |
| 3033747 | 25HCB336A30 | CNPV*4221A** | 58MV(B,C)100−20 | 34,000 | 11.5 | 14.0 | 34,400 | 3.66 | 8.1 | 20,800 | 2.56 |
| 3033815 | 25HCB336A30 | CNPV*4221A** | 58PH*090−16 | 34,400 | 11.5 | 14.5 | 34,600 | 3.72 | 8.2 | 21,000 | 2.58 |
| 3033816 | 25HCB336A30 | CNPV*4221A** | 58PH*110−20 | 34,400 | 11.5 | 14.5 | 34,600 | 3.76 | 8.2 | 21,000 | 2.60 |
| 3758753 | 25HCB336A30 | CNPV*4221A** | 58UVB080−14 | 33,800 | 11.5 | 14.0 | 34,600 | 3.60 | 8.0 | 21,000 | 2.52 |
| 3758754 | 25HCB336A30 | CNPV*4221A** | 58UVB080−20 | 34,000 | 11.5 | 14.0 | 34,600 | 3.64 | 8.1 | 21,000 | 2.54 |
| 3758755 | 25HCB336A30 | CNPV*4221A** | 58UVB100−20 | 34,000 | 11.5 | 14.0 | 34,400 | 3.66 | 8.1 | 20,800 | 2.56 |
| 3685079 | 25HCB336A30 | CNPV*4221A** | 58VLR120−20 | 34,000 | 11.5 | 14.0 | 34,200 | 3.68 | 8.0 | 20,800 | 2.58 |
| 3685078 | 25HCB336A30 | CNPV*4221A** | 58VMR120−20 | 33,800 | 11.5 | 14.0 | 34,400 | 3.64 | 8.0 | 20,800 | 2.56 |
| 4807937 | 25HCB336A30 | CNPV*4221A** | 59*N*A060V17**14 | 33,600 | 11.5 | 14.0 | 34,400 | 3.54 | 7.8 | 21,000 | 2.48 |
| 4807938 | 25HCB336A30 | CNPV*4221A** | 59*N*A080V17**14 | 33,600 | 11.8 | 14.2 | 34,200 | 3.58 | 7.8 | 20,800 | 2.52 |
| 4807939 | 25HCB336A30 | CNPV*4221A** | 59*N*A100V21**20 | 33,800 | 11.8 | 14.2 | 34,400 | 3.64 | 8.0 | 20,800 | 2.52 |
| 4807940 | 25HCB336A30 | CNPV*4221A** | 59*P5A060E17**14 | 34,000 | 11.4 | 13.7 | 34,800 | 3.64 | 8.0 | 21,200 | 2.52 |
| 4807941 | 25HCB336A30 | CNPV*4221A** | 59*P5A080E17**16 | 33,800 | 11.8 | 14.2 | 34,600 | 3.64 | 8.0 | 21,000 | 2.52 |
| 4209791 | 25HCB336A30 | CNPV*4221A** | OVLAAB048112 | 34,000 | 11.2 | 14.0 | 34,600 | 3.70 | 8.0 | 21,200 | 2.54 |
| 3033744 | 25HCB336A30 | CNPV*4221A**+TDR | | 34,200 | 10.8 | 13.0 | 35,400 | 3.62 | 8.0 | 21,800 | 2.50 |
| 3685109 | 25HCB336A30 | CNPV*4324A** | 58CV(A,X)135−22 | 35,200 | 12.2 | 15.0 | 34,000 | 3.92 | 8.5 | 21,000 | 2.68 |
| 3685110 | 25HCB336A30 | CNPV*4324A** | 58CV(A,X)155−22 | 35,400 | 12.5 | 15.0 | 34,000 | 3.94 | 8.5 | 20,800 | 2.70 |
| 4209829 | 25HCB336A30 | CNPV*4324A** | 58HDV080−−20 | 35,600 | 12.0 | 14.5 | 34,000 | 3.98 | 8.6 | 21,600 | 2.70 |
| 4149676 | 25HCB336A30 | CNPV*4324A** | 58HDV100−−20 | 35,800 | 12.2 | 14.5 | 34,200 | 3.96 | 8.5 | 21,400 | 2.70 |
| 3685140 | 25HCB336A30 | CNPV*4324A** | 58HDV100−−20 (DNFLW ONLY) | 35,800 | 12.2 | 14.5 | 34,200 | 3.96 | 8.5 | 21,400 | 2.70 |
| 3685108 | 25HCB336A30 | CNPV*4324A** | 58MV(B,C)120−20 | 35,200 | 12.2 | 15.0 | 34,000 | 3.90 | 8.5 | 21,000 | 2.68 |
| 3685107 | 25HCB336A30 | CNPV*4324A** | 58MVB040−14 | 35,000 | 12.0 | 14.5 | 34,200 | 3.82 | 8.2 | 21,000 | 2.64 |
| 3685291 | 25HCB336A30 | CNPV*4324A** | 58UVB120−20 | 35,200 | 12.2 | 15.0 | 34,000 | 3.90 | 8.5 | 21,000 | 2.68 |
| 4807942 | 25HCB336A30 | CNPV*4324A** | 59*N*A100V21**20 | 35,000 | 12.0 | 14.5 | 34,200 | 3.86 | 8.2 | 21,000 | 2.64 |
| 4807943 | 25HCB336A30 | CNPV*4324A** | 59*N*A120V24**22 | 35,000 | 12.5 | 15.0 | 34,000 | 3.88 | 8.5 | 20,800 | 2.64 |
| 3685106 | 25HCB336A30 | CNPV*4324A**+TDR | | 35,200 | 11.0 | 13.0 | 34,800 | 3.76 | 8.1 | 22,000 | 2.58 |
| 3033781 | 25HCB336A30 | CSPH*3612A** | 58CV(A,X)070−12 | 34,400 | 11.5 | 14.0 | 34,600 | 3.70 | 8.2 | 21,000 | 2.56 |
| 3033782 | 25HCB336A30 | CSPH*3612A** | 58CV(A,X)090−16 | 34,600 | 11.7 | 14.5 | 34,400 | 3.74 | 8.2 | 21,000 | 2.60 |
| 3033783 | 25HCB336A30 | CSPH*3612A** | 58CV(A,X)110−20 | 34,600 | 11.7 | 14.5 | 34,400 | 3.76 | 8.3 | 21,000 | 2.60 |
| 3033784 | 25HCB336A30 | CSPH*3612A** | 58CV(A,X)135−22 | 34,600 | 11.7 | 14.5 | 34,400 | 3.76 | 8.3 | 20,800 | 2.60 |
| 3033785 | 25HCB336A30 | CSPH*3612A** | 58CV(A,X)155−22 | 34,600 | 11.7 | 14.5 | 34,200 | 3.78 | 8.3 | 20,800 | 2.62 |
| 3685058 | 25HCB336A30 | CSPH*3612A** | 58HDV040−−12 | 34,000 | 11.0 | 13.2 | 35,200 | 3.64 | 8.1 | 21,600 | 2.52 |
| 3685059 | 25HCB336A30 | CSPH*3612A** | 58HDV060−−12 | 34,400 | 11.2 | 13.5 | 35,200 | 3.74 | 8.2 | 21,400 | 2.56 |
| 3685060 | 25HCB336A30 | CSPH*3612A** | 58HDV080−−20 | 34,800 | 11.5 | 14.0 | 35,200 | 3.84 | 8.3 | 21,400 | 2.62 |
| 3685061 | 25HCB336A30 | CSPH*3612A** | 58HDV100−−20 | 34,600 | 11.5 | 14.0 | 34,800 | 3.82 | 8.2 | 21,200 | 2.62 |
| 3618361 | 25HCB336A30 | CSPH*3612A** | 58ME(B,C)040−12 | 34,800 | 11.5 | 14.5 | 34,600 | 3.80 | 8.3 | 21,000 | 2.62 |
| 3121457 | 25HCB336A30 | CSPH*3612A** | 58ME(B,C)060−12 | 34,800 | 11.5 | 14.5 | 34,600 | 3.80 | 8.3 | 21,200 | 2.62 |
| 3121458 | 25HCB336A30 | CSPH*3612A** | 58ME(B,C)080−12 | 34,800 | 11.5 | 14.5 | 34,600 | 3.78 | 8.3 | 21,000 | 2.62 |
| 3121459 | 25HCB336A30 | CSPH*3612A** | 58ME(B,C)080−16 | 34,800 | 11.5 | 14.5 | 34,600 | 3.80 | 8.3 | 21,200 | 2.62 |
| 3121460 | 25HCB336A30 | CSPH*3612A** | 58ME(B,C)100−20 | 34,600 | 12.0 | 14.5 | 34,400 | 3.78 | 8.3 | 20,800 | 2.62 |

See notes on pg. 35

# COMBINATION RATINGS CONTINUED

| AHRI Ref. No. | Model Number | Coil Model Number | Furnace Model Number | Cooling Capacity | EER | SEER | High Temp | | HSPF | Low Temp | |
|---|---|---|---|---|---|---|---|---|---|---|---|
| | | | | | | | E Capacity | E COP | | H Capacity | H COP |
| 3121456 | 25HCB336A30 | CSPH*3612A** | 58MEB040−12 | 34,800 | 11.5 | 14.5 | 34,600 | 3.80 | 8.3 | 21,000 | 2.62 |
| 3033776 | 25HCB336A30 | CSPH*3612A** | 58MV(B,C)060−14 | 34,400 | 11.5 | 14.0 | 34,400 | 3.72 | 8.2 | 21,000 | 2.58 |
| 3033777 | 25HCB336A30 | CSPH*3612A** | 58MV(B,C)080−14 | 34,400 | 11.5 | 14.0 | 34,600 | 3.68 | 8.1 | 21,000 | 2.56 |
| 3033778 | 25HCB336A30 | CSPH*3612A** | 58MV(B,C)080−20 | 34,400 | 11.5 | 14.0 | 34,400 | 3.72 | 8.2 | 21,000 | 2.58 |
| 3033779 | 25HCB336A30 | CSPH*3612A** | 58MV(B,C)100−20 | 34,600 | 11.5 | 14.0 | 34,400 | 3.72 | 8.2 | 21,000 | 2.58 |
| 3033780 | 25HCB336A30 | CSPH*3612A** | 58MV(B,C)120−20 | 34,400 | 11.5 | 14.0 | 34,400 | 3.72 | 8.2 | 21,000 | 2.58 |
| 3033825 | 25HCB336A30 | CSPH*3612A** | 58PH*045−08 | 34,400 | 11.0 | 13.5 | 35,000 | 3.68 | 8.0 | 21,400 | 2.54 |
| 3033826 | 25HCB336A30 | CSPH*3612A** | 58PH*070−16 | 34,400 | 11.5 | 14.0 | 34,800 | 3.72 | 8.0 | 21,200 | 2.56 |
| 3033827 | 25HCB336A30 | CSPH*3612A** | 58PH*090−16 | 34,800 | 12.0 | 14.5 | 34,400 | 3.80 | 8.0 | 21,000 | 2.62 |
| 3033828 | 25HCB336A30 | CSPH*3612A** | 58PH*110−20 | 35,000 | 12.0 | 14.5 | 34,400 | 3.84 | 8.0 | 21,000 | 2.64 |
| 3685088 | 25HCB336A30 | CSPH*3612A** | 58VLR105−12 | 34,200 | 11.5 | 14.0 | 34,800 | 3.76 | 8.1 | 21,200 | 2.60 |
| 3685090 | 25HCB336A30 | CSPH*3612A** | 58VLR120−20 | 34,200 | 12.0 | 14.5 | 34,400 | 3.76 | 8.3 | 20,800 | 2.62 |
| 3685087 | 25HCB336A30 | CSPH*3612A** | 58VMR105−12 | 34,000 | 11.5 | 14.0 | 24,200 | 3.68 | 8.0 | 21,000 | 2.56 |
| 3685089 | 25HCB336A30 | CSPH*3612A** | 58VMR120−20 | 34,000 | 11.5 | 14.0 | 34,400 | 3.72 | 8.1 | 21,000 | 2.58 |
| 4807962 | 25HCB336A30 | CSPH*3612A** | 59*N*A060V17**14 | 34,000 | 11.8 | 14.2 | 34,600 | 3.62 | 8.0 | 21,000 | 2.52 |
| 4807963 | 25HCB336A30 | CSPH*3612A** | 59*N*A080V17**14 | 34,200 | 11.8 | 14.2 | 34,400 | 3.68 | 8.0 | 21,000 | 2.54 |
| 4807964 | 25HCB336A30 | CSPH*3612A** | 59*N*A100V21**20 | 34,200 | 11.8 | 14.2 | 34,600 | 3.72 | 8.0 | 21,000 | 2.56 |
| 4807965 | 25HCB336A30 | CSPH*3612A** | 59*N*A120V24**22 | 34,400 | 12.0 | 14.5 | 34,400 | 3.72 | 8.2 | 20,800 | 2.58 |
| 4807966 | 25HCB336A30 | CSPH*3612A** | 59*P5A060E17**14 | 34,400 | 11.5 | 14.0 | 34,800 | 3.72 | 8.2 | 21,200 | 2.54 |
| 4807967 | 25HCB336A30 | CSPH*3612A** | 59*P5A080E17**16 | 34,400 | 11.8 | 14.2 | 34,600 | 3.72 | 8.2 | 21,000 | 2.56 |
| 4209808 | 25HCB336A30 | CSPH*3612A** | OVLAAB036098 | 34,200 | 11.2 | 14.0 | 34,600 | 3.68 | 8.0 | 21,200 | 2.54 |
| 4209810 | 25HCB336A30 | CSPH*3612A** | OVLAAB048112 | 34,600 | 11.5 | 14.0 | 34,800 | 3.78 | 8.2 | 21,200 | 2.58 |
| 4209811 | 25HCB336A30 | CSPH*3612A** | OVLAAB060154 | 35,200 | 11.5 | 14.5 | 34,800 | 3.94 | 8.5 | 21,400 | 2.66 |
| 4209807 | 25HCB336A30 | CSPH*3612A** | OVMAAB036098 | 34,200 | 11.2 | 13.5 | 34,800 | 3.70 | 8.0 | 21,200 | 2.54 |
| 4209809 | 25HCB336A30 | CSPH*3612A** | OVMAAB042112 | 34,400 | 11.5 | 14.5 | 34,600 | 3.76 | 8.2 | 21,200 | 2.58 |
| 3033774 | 25HCB336A30 | CSPH*3612A**+TDR | | 34,600 | 11.0 | 13.2 | 35,200 | 3.68 | 8.1 | 22,000 | 2.52 |
| 3033793 | 25HCB336A30 | CSPH*4212A** | 58CV(A,X)070−12 | 34,600 | 11.5 | 14.0 | 34,400 | 3.74 | 8.2 | 21,000 | 2.58 |
| 3033794 | 25HCB336A30 | CSPH*4212A** | 58CV(A,X)090−16 | 34,800 | 11.7 | 14.5 | 34,200 | 3.78 | 8.3 | 21,000 | 2.62 |
| 3033795 | 25HCB336A30 | CSPH*4212A** | 58CV(A,X)110−20 | 34,800 | 11.7 | 14.5 | 34,200 | 3.80 | 8.3 | 21,000 | 2.62 |
| 3033796 | 25HCB336A30 | CSPH*4212A** | 58CV(A,X)135−22 | 34,800 | 11.7 | 14.5 | 34,200 | 3.80 | 8.4 | 21,000 | 2.62 |
| 3033797 | 25HCB336A30 | CSPH*4212A** | 58CV(A,X)155−22 | 35,000 | 11.7 | 14.5 | 34,000 | 3.82 | 8.4 | 20,800 | 2.64 |
| 3685062 | 25HCB336A30 | CSPH*4212A** | 58HDV040−−12 | 34,400 | 11.2 | 13.5 | 34,800 | 3.70 | 8.1 | 21,600 | 2.54 |
| 3685063 | 25HCB336A30 | CSPH*4212A** | 58HDV060−−12 | 34,600 | 11.2 | 13.5 | 34,800 | 3.78 | 8.1 | 21,600 | 2.58 |
| 3685064 | 25HCB336A30 | CSPH*4212A** | 58HDV080−−20 | 35,200 | 11.5 | 14.0 | 34,600 | 3.88 | 8.2 | 21,600 | 2.64 |
| 3685065 | 25HCB336A30 | CSPH*4212A** | 58HDV100−−20 | 35,000 | 11.5 | 14.0 | 34,200 | 3.86 | 8.2 | 21,200 | 2.64 |
| 3618362 | 25HCB336A30 | CSPH*4212A** | 58ME(B,C)040−12 | 35,000 | 12.0 | 14.5 | 34,400 | 3.84 | 8.4 | 21,200 | 2.64 |
| 3121462 | 25HCB336A30 | CSPH*4212A** | 58ME(B,C)060−12 | 35,200 | 11.5 | 14.5 | 34,400 | 3.84 | 8.3 | 21,200 | 2.64 |
| 3121463 | 25HCB336A30 | CSPH*4212A** | 58ME(B,C)080−12 | 35,000 | 11.5 | 14.5 | 34,400 | 3.82 | 8.3 | 21,000 | 2.64 |
| 3121464 | 25HCB336A30 | CSPH*4212A** | 58ME(B,C)080−16 | 35,000 | 11.5 | 14.5 | 34,400 | 3.84 | 8.3 | 21,200 | 2.64 |
| 3121535 | 25HCB336A30 | CSPH*4212A** | 58ME(B,C)100−20 | 35,000 | 12.0 | 14.5 | 34,200 | 3.84 | 8.3 | 21,000 | 2.64 |
| 3121461 | 25HCB336A30 | CSPH*4212A** | 58MEB040−12 | 35,000 | 12.0 | 14.5 | 34,400 | 3.84 | 8.4 | 21,200 | 2.64 |
| 3033788 | 25HCB336A30 | CSPH*4212A** | 58MV(B,C)060−14 | 34,600 | 11.7 | 14.5 | 34,200 | 3.76 | 8.3 | 21,000 | 2.60 |
| 3033789 | 25HCB336A30 | CSPH*4212A** | 58MV(B,C)080−14 | 34,600 | 11.5 | 14.0 | 34,400 | 3.70 | 8.2 | 21,000 | 2.58 |
| 3033790 | 25HCB336A30 | CSPH*4212A** | 58MV(B,C)080−20 | 34,600 | 11.5 | 14.0 | 34,200 | 3.74 | 8.3 | 21,000 | 2.60 |
| 3033791 | 25HCB336A30 | CSPH*4212A** | 58MV(B,C)100−20 | 34,800 | 11.7 | 14.5 | 34,200 | 3.76 | 8.3 | 21,000 | 2.60 |
| 3033792 | 25HCB336A30 | CSPH*4212A** | 58MV(B,C)120−20 | 34,600 | 11.7 | 14.5 | 34,200 | 3.76 | 8.3 | 21,000 | 2.60 |
| 3033829 | 25HCB336A30 | CSPH*4212A** | 58PH*045−08 | 34,600 | 11.0 | 13.5 | 34,800 | 3.70 | 8.0 | 21,600 | 2.56 |
| 3033830 | 25HCB336A30 | CSPH*4212A** | 58PH*070−16 | 34,800 | 11.5 | 14.0 | 34,600 | 3.76 | 8.0 | 21,200 | 2.58 |
| 3033831 | 25HCB336A30 | CSPH*4212A** | 58PH*090−16 | 35,000 | 12.0 | 14.5 | 34,200 | 3.84 | 8.0 | 21,000 | 2.64 |
| 3033832 | 25HCB336A30 | CSPH*4212A** | 58PH*110−20 | 35,200 | 12.0 | 14.5 | 34,200 | 3.88 | 8.0 | 21,000 | 2.66 |
| 3685092 | 25HCB336A30 | CSPH*4212A** | 58VLR105−12 | 34,600 | 11.5 | 14.0 | 34,600 | 3.80 | 8.3 | 21,200 | 2.62 |
| 3685094 | 25HCB336A30 | CSPH*4212A** | 58VLR120−20 | 34,600 | 12.0 | 14.5 | 34,200 | 3.82 | 8.3 | 20,800 | 2.64 |
| 3685091 | 25HCB336A30 | CSPH*4212A** | 58VMR105−12 | 34,200 | 11.5 | 14.0 | 34,400 | 3.72 | 8.1 | 21,000 | 2.58 |
| 3685093 | 25HCB336A30 | CSPH*4212A** | 58VMR120−20 | 34,200 | 11.5 | 14.0 | 34,400 | 3.76 | 8.2 | 21,000 | 2.60 |
| 4807968 | 25HCB336A30 | CSPH*4212A** | 59*N*A060V17**14 | 34,200 | 11.8 | 14.2 | 34,400 | 3.68 | 8.0 | 21,000 | 2.54 |
| 4807969 | 25HCB336A30 | CSPH*4212A** | 59*N*A080V17**14 | 34,400 | 12.0 | 14.5 | 34,400 | 3.72 | 8.2 | 21,000 | 2.56 |
| 4807970 | 25HCB336A30 | CSPH*4212A** | 59*N*A100V21**20 | 34,600 | 12.0 | 14.5 | 34,400 | 3.76 | 8.2 | 21,000 | 2.58 |
| 4807971 | 25HCB336A30 | CSPH*4212A** | 59*N*A120V24**22 | 34,600 | 12.0 | 14.5 | 34,400 | 3.78 | 8.2 | 20,800 | 2.60 |
| 4807972 | 25HCB336A30 | CSPH*4212A** | 59*P5A060E17**14 | 34,600 | 11.8 | 14.2 | 34,800 | 3.78 | 8.2 | 21,400 | 2.58 |
| 4807973 | 25HCB336A30 | CSPH*4212A** | 59*P5A080E17**16 | 34,600 | 12.0 | 14.5 | 34,600 | 3.78 | 8.2 | 21,000 | 2.58 |
| 4209813 | 25HCB336A30 | CSPH*4212A** | OVLAAB036098 | 34,400 | 11.5 | 14.0 | 34,600 | 3.74 | 8.2 | 21,200 | 2.56 |
| 4209815 | 25HCB336A30 | CSPH*4212A** | OVLAAB048112 | 34,800 | 11.5 | 14.5 | 34,600 | 3.82 | 8.2 | 21,400 | 2.60 |
| 4209816 | 25HCB336A30 | CSPH*4212A** | OVLAAB060154 | 35,600 | 12.0 | 14.5 | 34,400 | 3.98 | 8.5 | 21,400 | 2.68 |
| 4209812 | 25HCB336A30 | CSPH*4212A** | OVMAAB036098 | 34,600 | 11.5 | 14.0 | 34,600 | 3.76 | 8.2 | 21,400 | 2.56 |
| 4209814 | 25HCB336A30 | CSPH*4212A** | OVMAAB042112 | 34,600 | 11.5 | 14.5 | 34,400 | 3.80 | 8.2 | 21,200 | 2.60 |
| 3033786 | 25HCB336A30 | CSPH*4212A**+TDR | | 34,800 | 11.0 | 13.2 | 34,800 | 3.70 | 8.2 | 22,000 | 2.54 |
| 3853224 | 25HCB336A30 | FB4CNF036 | | 34,000 | 11.0 | 13.0 | 34,000 | 3.60 | 8.0 | 21,400 | 2.50 |
| 3685136 | 25HCB336A30 | FB4CNF036+TXV | | 33,800 | 11.0 | 13.5 | 35,000 | 3.58 | 7.7 | 21,400 | 2.50 |
| 3853225 | 25HCB336A30 | FB4CNF042 | | 34,000 | 11.0 | 13.0 | 34,000 | 3.86 | 8.0 | 21,200 | 2.64 |
| 3685137 | 25HCB336A30 | FB4CNF042+TXV | | 35,200 | 12.0 | 14.5 | 34,400 | 3.88 | 8.3 | 21,200 | 2.66 |
| 3033802 | 25HCB336A30 | FE4AN(B,F)003+UI | | 34,200 | 11.7 | 14.5 | 34,400 | 3.68 | 8.1 | 20,800 | 2.58 |
| 3033801 | 25HCB336A30 | FE4ANF002+UI | | 33,800 | 11.5 | 14.0 | 34,600 | 3.64 | 8.0 | 21,000 | 2.54 |
| 3033803 | 25HCB336A30 | FF1ENP036 | | 33,800 | 10.5 | 13.0 | 35,400 | 3.52 | 7.8 | 21,800 | 2.44 |
| 3463949 | 25HCB336A30 | FF1ENP037 | | 33,600 | 11.2 | 14.0 | 34,600 | 3.58 | 7.8 | 21,000 | 2.52 |
| 3405757 | 25HCB336A30 | FV4CN(B,F)003 | | 34,200 | 11.7 | 14.5 | 34,400 | 3.68 | 8.1 | 20,800 | 2.58 |
| 3405756 | 25HCB336A30 | FV4CNF002 | | 33,800 | 11.5 | 14.0 | 34,600 | 3.64 | 8.0 | 21,000 | 2.54 |
| 3685132 | 25HCB336A30 | FX4DN(B,F)037 | | 35,200 | 12.0 | 14.5 | 34,400 | 3.86 | 8.5 | 21,200 | 2.66 |
| 3685133 | 25HCB336A30 | FX4DN(B,F)043 | | 35,200 | 12.0 | 14.5 | 34,400 | 3.86 | 8.5 | 21,200 | 2.66 |
| 3685138 | 25HCB336A30 | FY5BNF036+TXV | | 34,200 | 11.0 | 13.5 | 35,200 | 3.64 | 7.9 | 21,400 | 2.52 |

See notes on pg. 35

# COMBINATION RATINGS CONTINUED

| AHRI Ref. No. | Model Number | Coil Model Number | Furnace Model Number | Cooling Capacity | EER | SEER | High Temp | | HSPF | Low Temp | |
|---|---|---|---|---|---|---|---|---|---|---|---|
| | | | | | | | E Capacity | E COP | | H Capacity | H COP |
| 3853226 | 25HCB336A30 | FY5BNF042 | | 34,000 | 11.0 | 13.0 | 34,000 | 3.76 | 8.0 | 21,600 | 2.56 |
| 3685139 | 25HCB336A30 | FY5BNF042+TXV | | 34,800 | 11.2 | 13.5 | 34,800 | 3.74 | 8.1 | 21,600 | 2.56 |
| | | | | | | | | | | | |
| 3850723 | 25HCB342A30 | †FY5BNF042 | | 41,000 | 11.0 | 13.0 | 41,000 | 3.64 | 8.0 | 26,000 | 2.54 |
| 3034157 | 25HCB342A30 | CAP**4221A** | 58CV(A,X)090−16 | 40,000 | 11.2 | 14.0 | 41,500 | 3.40 | 7.8 | 25,800 | 2.40 |
| 3034074 | 25HCB342A30 | CAP**4221A** | 58CV(A,X)110−20 | 40,000 | 11.2 | 14.0 | 41,000 | 3.50 | 8.1 | 25,200 | 2.52 |
| 3121465 | 25HCB342A30 | CAP**4221A** | 58ME(B,C)100−20 | 40,500 | 11.5 | 14.0 | 41,000 | 3.56 | 8.2 | 25,200 | 2.54 |
| 3034071 | 25HCB342A30 | CAP**4221A** | 58MV(B,C)080−14 | 39,500 | 10.9 | 13.5 | 41,500 | 3.42 | 7.9 | 25,400 | 2.46 |
| 3034072 | 25HCB342A30 | CAP**4221A** | 58MV(B,C)080−20 | 40,000 | 11.0 | 13.5 | 41,500 | 3.46 | 8.0 | 25,200 | 2.48 |
| 3034073 | 25HCB342A30 | CAP**4221A** | 58MV(B,C)100−20 | 40,000 | 11.2 | 13.5 | 41,000 | 3.48 | 8.0 | 25,200 | 2.50 |
| 3034168 | 25HCB342A30 | CAP**4221A** | 58PH*090−16 | 40,000 | 11.2 | 13.5 | 41,000 | 3.54 | 8.2 | 25,200 | 2.54 |
| 3034169 | 25HCB342A30 | CAP**4221A** | 58PH*110−20 | 40,500 | 11.5 | 14.0 | 41,000 | 3.56 | 8.2 | 25,200 | 2.54 |
| 3757464 | 25HCB342A30 | CAP**4221A** | 58UVB080−14 | 39,500 | 10.9 | 13.5 | 41,500 | 3.42 | 7.9 | 25,400 | 2.46 |
| 3757465 | 25HCB342A30 | CAP**4221A** | 58UVB080−20 | 40,000 | 11.0 | 13.5 | 41,500 | 3.46 | 8.0 | 25,200 | 2.48 |
| 3757466 | 25HCB342A30 | CAP**4221A** | 58UVB100−20 | 40,000 | 11.2 | 13.5 | 41,000 | 3.48 | 8.0 | 25,200 | 2.50 |
| 3685160 | 25HCB342A30 | CAP**4221A** | 58VLR120−20 | 39,500 | 11.2 | 13.5 | 41,000 | 3.50 | 8.0 | 25,200 | 2.52 |
| 3685159 | 25HCB342A30 | CAP**4221A** | 58VMR120−20 | 39,500 | 11.2 | 13.5 | 41,000 | 3.48 | 8.0 | 25,200 | 2.50 |
| 4807974 | 25HCB342A30 | CAP**4221A** | 59*N*A060V17**14 | 39,500 | 11.0 | 13.3 | 41,000 | 3.40 | 7.8 | 25,400 | 2.44 |
| 4807975 | 25HCB342A30 | CAP**4221A** | 59*N*A080V17**14 | 39,500 | 11.3 | 13.7 | 41,000 | 3.44 | 8.0 | 25,200 | 2.46 |
| 4807976 | 25HCB342A30 | CAP**4221A** | 59*N*A100V21**20 | 39,500 | 11.4 | 13.7 | 41,000 | 3.46 | 8.0 | 25,200 | 2.48 |
| 4807977 | 25HCB342A30 | CAP**4221A** | 59*P5A060E17**14 | 39,500 | 11.1 | 13.5 | 41,500 | 3.46 | 8.0 | 25,600 | 2.46 |
| 4807978 | 25HCB342A30 | CAP**4221A** | 59*P5A080E17**16 | 40,000 | 11.2 | 13.5 | 41,500 | 3.52 | 8.0 | 25,600 | 2.48 |
| 4807979 | 25HCB342A30 | CAP**4221A** | 59*P5A100E21**16 | 40,000 | 11.3 | 13.7 | 41,000 | 3.48 | 8.0 | 25,400 | 2.48 |
| 4209830 | 25HCB342A30 | CAP**4221A** | OVLAAB048112 | 40,000 | 11.0 | 13.2 | 41,500 | 3.52 | 8.0 | 25,800 | 2.48 |
| 3034070 | 25HCB342A30 | CAP**4221A**+TDR | | 40,000 | 10.4 | 13.0 | 42,500 | 3.50 | 8.0 | 26,200 | 2.46 |
| 3034078 | 25HCB342A30 | CAP**4224A** | 58CV(A,X)135−22 | 40,000 | 11.4 | 14.0 | 41,000 | 3.54 | 8.2 | 25,000 | 2.54 |
| 3034079 | 25HCB342A30 | CAP**4224A** | 58CV(A,X)155−22 | 40,000 | 11.5 | 14.0 | 41,000 | 3.52 | 8.2 | 25,000 | 2.54 |
| 3685145 | 25HCB342A30 | CAP**4224A** | 58HDV100−−20 | 40,000 | 11.2 | 13.5 | 41,000 | 3.54 | 8.2 | 25,400 | 2.52 |
| 3121466 | 25HCB342A30 | CAP**4224A** | 58ME(B,C)120−20 | 40,500 | 11.5 | 14.0 | 41,000 | 3.60 | 8.3 | 25,200 | 2.56 |
| 3034077 | 25HCB342A30 | CAP**4224A** | 58MV(B,C)120−20 | 40,000 | 11.2 | 14.0 | 41,000 | 3.48 | 8.0 | 25,200 | 2.50 |
| 3034170 | 25HCB342A30 | CAP**4224A** | 58PH*135−20 | 40,500 | 11.5 | 14.0 | 41,000 | 3.56 | 8.2 | 25,200 | 2.54 |
| 3757467 | 25HCB342A30 | CAP**4224A** | 58UVB040−14 | 39,500 | 11.0 | 13.5 | 41,000 | 3.44 | 8.0 | 25,200 | 2.48 |
| 3757468 | 25HCB342A30 | CAP**4224A** | 58UVB120−20 | 40,000 | 11.2 | 14.0 | 41,000 | 3.48 | 8.0 | 25,200 | 2.50 |
| 4807980 | 25HCB342A30 | CAP**4224A** | 59*N*A100V21**20 | 39,500 | 11.4 | 13.7 | 41,000 | 3.48 | 8.0 | 25,200 | 2.50 |
| 4807981 | 25HCB342A30 | CAP**4224A** | 59*N*A120V24**22 | 39,500 | 11.5 | 14.0 | 40,500 | 3.48 | 8.0 | 25,000 | 2.50 |
| 4807982 | 25HCB342A30 | CAP**4224A** | 59*P5A100E21**16 | 40,000 | 11.3 | 13.7 | 41,000 | 3.50 | 8.0 | 25,400 | 2.50 |
| 4807983 | 25HCB342A30 | CAP**4224A** | 59*P5A120E24**22 | 40,500 | 11.5 | 14.0 | 41,500 | 3.60 | 8.2 | 25,400 | 2.54 |
| 3034075 | 25HCB342A30 | CAP**4224A**+TDR | | 40,000 | 10.4 | 13.0 | 42,500 | 3.50 | 8.0 | 26,200 | 2.46 |
| 3034082 | 25HCB342A30 | CAP**4817A** | 58CV(A,X)090−16 | 40,000 | 11.4 | 14.0 | 39,500 | 3.68 | 8.4 | 25,400 | 2.58 |
| 3618363 | 25HCB342A30 | CAP**4817A** | 58ME(B,C)040−12 | 41,500 | 11.5 | 14.0 | 41,000 | 3.68 | 8.4 | 25,800 | 2.58 |
| 3121468 | 25HCB342A30 | CAP**4817A** | 58ME(B,C)060−12 | 41,500 | 11.5 | 14.0 | 41,000 | 3.68 | 8.4 | 25,800 | 2.58 |
| 3121467 | 25HCB342A30 | CAP**4817A** | 58MEB040−12 | 41,500 | 11.5 | 14.0 | 41,000 | 3.68 | 8.4 | 25,800 | 2.58 |
| 3034081 | 25HCB342A30 | CAP**4817A** | 58MV(B,C)060−14 | 40,000 | 11.3 | 14.0 | 39,500 | 3.64 | 8.4 | 25,600 | 2.56 |
| 3034171 | 25HCB342A30 | CAP**4817A** | 58PH*070−16 | 41,000 | 11.0 | 13.5 | 41,000 | 3.60 | 8.2 | 26,000 | 2.52 |
| 3757469 | 25HCB342A30 | CAP**4817A** | 58UVB060−14 | 40,000 | 11.3 | 14.0 | 39,500 | 3.64 | 8.4 | 25,600 | 2.56 |
| 4807984 | 25HCB342A30 | CAP**4817A** | 59*N*A060V17**14 | 40,500 | 11.3 | 13.7 | 41,500 | 3.58 | 8.2 | 25,600 | 2.50 |
| 4807985 | 25HCB342A30 | CAP**4817A** | 59*N*A080V17**14 | 40,500 | 11.5 | 14.0 | 41,000 | 3.62 | 8.2 | 25,600 | 2.52 |
| 4807986 | 25HCB342A30 | CAP**4817A** | 59*P5A060E17**14 | 41,000 | 11.4 | 13.7 | 41,500 | 3.64 | 8.2 | 25,800 | 2.52 |
| 4807987 | 25HCB342A30 | CAP**4817A** | 59*P5A080E17**16 | 41,000 | 11.5 | 14.0 | 41,500 | 3.68 | 8.2 | 25,800 | 2.54 |
| 4209831 | 25HCB342A30 | CAP**4817A** | OVMAAB042112 | 41,000 | 11.2 | 14.0 | 41,500 | 3.66 | 8.3 | 25,800 | 2.54 |
| 3034080 | 25HCB342A30 | CAP**4817A**+TDR | | 40,500 | 10.7 | 13.0 | 40,000 | 3.64 | 8.4 | 26,400 | 2.54 |
| 3034087 | 25HCB342A30 | CAP**4821A** | 58CV(A,X)110−20 | 41,000 | 11.4 | 14.0 | 41,000 | 3.68 | 8.4 | 25,400 | 2.58 |
| 3121469 | 25HCB342A30 | CAP**4821A** | 58ME(B,C)100−20 | 41,000 | 11.5 | 14.0 | 41,000 | 3.72 | 8.4 | 25,400 | 2.60 |
| 3034084 | 25HCB342A30 | CAP**4821A** | 58MV(B,C)080−14 | 40,500 | 11.4 | 13.5 | 41,500 | 3.58 | 8.2 | 25,600 | 2.52 |
| 3034085 | 25HCB342A30 | CAP**4821A** | 58MV(B,C)080−20 | 40,500 | 11.2 | 13.5 | 41,000 | 3.62 | 8.3 | 25,400 | 2.54 |
| 3034086 | 25HCB342A30 | CAP**4821A** | 58MV(B,C)100−20 | 40,500 | 11.3 | 14.0 | 41,000 | 3.64 | 8.4 | 25,400 | 2.56 |
| 3034172 | 25HCB342A30 | CAP**4821A** | 58PH*090−16 | 41,000 | 11.5 | 14.0 | 41,000 | 3.68 | 8.2 | 25,400 | 2.58 |
| 3034173 | 25HCB342A30 | CAP**4821A** | 58PH*110−20 | 41,000 | 11.5 | 14.0 | 41,000 | 3.70 | 8.4 | 25,400 | 2.60 |
| 3757470 | 25HCB342A30 | CAP**4821A** | 58UVB080−14 | 40,500 | 11.4 | 13.5 | 41,500 | 3.58 | 8.2 | 25,600 | 2.52 |
| 3757471 | 25HCB342A30 | CAP**4821A** | 58UVB080−20 | 40,500 | 11.2 | 13.5 | 41,000 | 3.62 | 8.3 | 25,400 | 2.54 |
| 3757472 | 25HCB342A30 | CAP**4821A** | 58UVB100−20 | 40,500 | 11.3 | 14.0 | 41,000 | 3.64 | 8.4 | 25,400 | 2.56 |
| 3685162 | 25HCB342A30 | CAP**4821A** | 58VLR120−20 | 40,500 | 11.5 | 14.0 | 41,500 | 3.66 | 8.3 | 25,400 | 2.56 |
| 3685161 | 25HCB342A30 | CAP**4821A** | 58VMR120−20 | 40,500 | 11.2 | 13.5 | 41,500 | 3.64 | 8.2 | 25,400 | 2.56 |
| 4807988 | 25HCB342A30 | CAP**4821A** | 59*N*A060V17**14 | 40,000 | 11.3 | 13.7 | 41,500 | 3.54 | 8.0 | 25,600 | 2.48 |
| 4807989 | 25HCB342A30 | CAP**4821A** | 59*N*A080V17**14 | 40,000 | 11.4 | 13.7 | 41,500 | 3.58 | 8.2 | 25,400 | 2.50 |
| 4807990 | 25HCB342A30 | CAP**4821A** | 59*N*A100V21**20 | 40,500 | 11.5 | 14.0 | 41,000 | 3.62 | 8.2 | 25,400 | 2.54 |
| 4807991 | 25HCB342A30 | CAP**4821A** | 59*P5A060E17**14 | 40,500 | 11.3 | 13.7 | 41,500 | 3.62 | 8.2 | 25,800 | 2.50 |
| 4807992 | 25HCB342A30 | CAP**4821A** | 59*P5A080E17**16 | 40,500 | 11.4 | 13.7 | 41,500 | 3.66 | 8.2 | 25,800 | 2.52 |
| 4807993 | 25HCB342A30 | CAP**4821A** | 59*P5A100E21**16 | 40,500 | 11.5 | 14.0 | 41,500 | 3.64 | 8.2 | 25,600 | 2.52 |
| 4209832 | 25HCB342A30 | CAP**4821A** | OVLAAB048112 | 41,000 | 11.0 | 13.5 | 42,000 | 3.66 | 8.3 | 26,000 | 2.52 |
| 3034083 | 25HCB342A30 | CAP**4821A**+TDR | | 41,000 | 10.6 | 13.0 | 42,000 | 3.62 | 8.3 | 26,400 | 2.52 |
| 3685177 | 25HCB342A30 | CAP**4823A** | 58HDV080−−20 | 41,000 | 11.2 | 13.5 | 41,500 | 3.70 | 8.3 | 25,800 | 2.56 |
| 4807998 | 25HCB342A30 | CAP**4823A** | 59*N*A100V21**20 | 40,500 | 11.5 | 14.0 | 41,000 | 3.62 | 8.2 | 25,400 | 2.54 |
| 4807999 | 25HCB342A30 | CAP**4823A** | 59*N*A120V24**22 | 40,500 | 11.7 | 14.2 | 41,000 | 3.64 | 8.2 | 25,200 | 2.54 |
| 4808000 | 25HCB342A30 | CAP**4823A** | 59*P5A100E21**16 | 40,500 | 11.5 | 14.0 | 41,500 | 3.64 | 8.2 | 25,600 | 2.52 |
| 4808001 | 25HCB342A30 | CAP**4823A** | 59*P5A120E24**22 | 41,000 | 11.7 | 14.2 | 41,500 | 3.72 | 8.5 | 25,600 | 2.58 |
| 3685209 | 25HCB342A30 | CAP**4823A**+TDR | | 41,000 | 10.6 | 13.0 | 42,000 | 3.64 | 8.3 | 26,400 | 2.52 |
| 3034091 | 25HCB342A30 | CAP**4824A** | 58CV(A,X)135−22 | 41,000 | 11.6 | 14.5 | 41,000 | 3.70 | 8.5 | 25,200 | 2.60 |
| 3034092 | 25HCB342A30 | CAP**4824A** | 58CV(A,X)155−22 | 41,000 | 11.6 | 14.5 | 41,000 | 3.70 | 8.5 | 25,200 | 2.60 |

See notes on pg. 35

# COMBINATION RATINGS CONTINUED

| AHRI Ref. No. | Model Number | Coil Model Number | Furnace Model Number | Cooling Capacity | EER | SEER | High Temp | | HSPF | Low Temp | |
|---|---|---|---|---|---|---|---|---|---|---|---|
| | | | | | | | E Capacity | E COP | | H Capacity | H COP |
| 3685146 | 25HCB342A30 | CAP**4824A** | 58HDV100−−20 | 41,000 | 11.2 | 13.5 | 40,000 | 3.70 | 8.2 | 25,600 | 2.58 |
| 3121470 | 25HCB342A30 | CAP**4824A** | 58ME(B,C)120−20 | 41,000 | 11.5 | 14.5 | 41,500 | 3.74 | 8.4 | 25,400 | 2.62 |
| 3034090 | 25HCB342A30 | CAP**4824A** | 58MV(B,C)120−20 | 40,500 | 11.4 | 14.0 | 41,000 | 3.64 | 8.4 | 25,200 | 2.56 |
| 3034174 | 25HCB342A30 | CAP**4824A** | 58PH*135−20 | 41,000 | 11.5 | 14.0 | 41,000 | 3.70 | 8.4 | 25,400 | 2.58 |
| 3757473 | 25HCB342A30 | CAP**4824A** | 58UVB040−14 | 40,500 | 11.1 | 13.5 | 41,000 | 3.60 | 8.3 | 25,400 | 2.52 |
| 3757474 | 25HCB342A30 | CAP**4824A** | 58UVB120−20 | 40,500 | 11.4 | 14.0 | 41,000 | 3.64 | 8.4 | 25,200 | 2.56 |
| 4807994 | 25HCB342A30 | CAP**4824A** | 59*N*A100V21**20 | 40,500 | 11.6 | 14.2 | 41,000 | 3.62 | 8.2 | 25,400 | 2.54 |
| 4807995 | 25HCB342A30 | CAP**4824A** | 59*N*A120V24**22 | 40,500 | 11.8 | 14.2 | 41,000 | 3.64 | 8.2 | 25,200 | 2.56 |
| 4807996 | 25HCB342A30 | CAP**4824A** | 59*P5A100E21**16 | 40,500 | 11.5 | 14.0 | 41,500 | 3.64 | 8.2 | 25,600 | 2.54 |
| 4807997 | 25HCB342A30 | CAP**4824A** | 59*P5A120E24**22 | 41,000 | 11.8 | 14.2 | 41,500 | 3.76 | 8.5 | 25,600 | 2.58 |
| 3034088 | 25HCB342A30 | CAP**4824A**+TDR | | 41,000 | 10.6 | 13.0 | 42,000 | 3.62 | 8.3 | 26,400 | 2.52 |
| 3034115 | 25HCB342A30 | CNPH*4221A** | 58CV(A,X)070−12 | 40,000 | 11.1 | 13.5 | 41,500 | 3.48 | 8.0 | 25,200 | 2.50 |
| 3034116 | 25HCB342A30 | CNPH*4221A** | 58CV(A,X)090−16 | 40,000 | 11.4 | 14.0 | 41,000 | 3.52 | 8.2 | 25,000 | 2.54 |
| 3034117 | 25HCB342A30 | CNPH*4221A** | 58CV(A,X)110−20 | 40,000 | 11.5 | 14.0 | 41,000 | 3.56 | 8.2 | 25,000 | 2.56 |
| 3034118 | 25HCB342A30 | CNPH*4221A** | 58CV(A,X)135−22 | 40,000 | 11.6 | 14.5 | 41,000 | 3.58 | 8.2 | 25,000 | 2.56 |
| 3034119 | 25HCB342A30 | CNPH*4221A** | 58CV(A,X)155−22 | 40,000 | 11.6 | 14.5 | 41,000 | 3.58 | 8.2 | 24,800 | 2.56 |
| 3685148 | 25HCB342A30 | CNPH*4221A** | 58HDV080−−20 | 40,000 | 11.0 | 13.2 | 42,000 | 3.54 | 8.2 | 25,600 | 2.52 |
| 3685149 | 25HCB342A30 | CNPH*4221A** | 58HDV100−−20 | 40,000 | 11.2 | 13.5 | 41,500 | 3.52 | 8.1 | 25,400 | 2.52 |
| 3618365 | 25HCB342A30 | CNPH*4221A** | 58ME(B,C)040−12 | 40,500 | 11.0 | 13.5 | 41,500 | 3.54 | 8.1 | 25,400 | 2.52 |
| 3121483 | 25HCB342A30 | CNPH*4221A** | 58ME(B,C)060−12 | 40,000 | 11.0 | 13.5 | 41,500 | 3.52 | 8.1 | 25,600 | 2.52 |
| 3121484 | 25HCB342A30 | CNPH*4221A** | 58ME(B,C)080−12 | 40,000 | 11.0 | 13.5 | 41,500 | 3.52 | 8.1 | 25,400 | 2.52 |
| 3121485 | 25HCB342A30 | CNPH*4221A** | 58ME(B,C)080−16 | 40,000 | 11.0 | 13.5 | 41,000 | 3.50 | 8.1 | 25,400 | 2.50 |
| 3121486 | 25HCB342A30 | CNPH*4221A** | 58ME(B,C)100−20 | 40,000 | 11.0 | 13.5 | 41,000 | 3.54 | 8.2 | 25,200 | 2.54 |
| 3121487 | 25HCB342A30 | CNPH*4221A** | 58ME(B,C)120−20 | 40,500 | 11.5 | 14.0 | 41,000 | 3.56 | 8.2 | 25,200 | 2.54 |
| 3121482 | 25HCB342A30 | CNPH*4221A** | 58MEB040−12 | 40,500 | 11.0 | 13.5 | 41,500 | 3.54 | 8.1 | 25,400 | 2.52 |
| 3034110 | 25HCB342A30 | CNPH*4221A** | 58MV(B,C)060−14 | 39,500 | 11.3 | 14.0 | 41,000 | 3.50 | 8.1 | 25,200 | 2.52 |
| 3034111 | 25HCB342A30 | CNPH*4221A** | 58MV(B,C)080−14 | 39,500 | 11.1 | 13.5 | 41,000 | 3.48 | 8.0 | 25,200 | 2.50 |
| 3034112 | 25HCB342A30 | CNPH*4221A** | 58MV(B,C)080−20 | 40,000 | 11.2 | 14.0 | 41,000 | 3.50 | 8.1 | 25,200 | 2.52 |
| 3034113 | 25HCB342A30 | CNPH*4221A** | 58MV(B,C)100−20 | 40,000 | 11.4 | 14.0 | 41,000 | 3.54 | 8.2 | 25,000 | 2.54 |
| 3034114 | 25HCB342A30 | CNPH*4221A** | 58MV(B,C)120−20 | 40,000 | 11.4 | 14.0 | 41,000 | 3.52 | 8.2 | 25,000 | 2.54 |
| 3034180 | 25HCB342A30 | CNPH*4221A** | 58PH*070−16 | 40,000 | 10.8 | 13.0 | 42,000 | 3.44 | 8.0 | 25,800 | 2.46 |
| 3034181 | 25HCB342A30 | CNPH*4221A** | 58PH*090−16 | 40,000 | 11.2 | 13.5 | 41,000 | 3.52 | 8.1 | 25,200 | 2.52 |
| 3034182 | 25HCB342A30 | CNPH*4221A** | 58PH*110−20 | 40,000 | 11.5 | 14.0 | 41,000 | 3.52 | 8.1 | 25,200 | 2.54 |
| 3034183 | 25HCB342A30 | CNPH*4221A** | 58PH*135−20 | 40,000 | 11.2 | 13.5 | 41,000 | 3.50 | 8.1 | 25,200 | 2.52 |
| 3685170 | 25HCB342A30 | CNPH*4221A** | 58VLR120−20 | 40,000 | 11.2 | 13.5 | 41,000 | 3.50 | 8.0 | 25,200 | 2.52 |
| 3685169 | 25HCB342A30 | CNPH*4221A** | 58VMR120−20 | 39,500 | 11.2 | 13.5 | 41,000 | 3.48 | 8.0 | 25,200 | 2.50 |
| 4808026 | 25HCB342A30 | CNPH*4221A** | 59*N*A060V17**14 | 39,500 | 11.0 | 13.3 | 41,000 | 3.40 | 7.8 | 25,400 | 2.44 |
| 4808027 | 25HCB342A30 | CNPH*4221A** | 59*N*A080V17**14 | 39,500 | 11.2 | 13.5 | 41,000 | 3.44 | 7.8 | 25,400 | 2.46 |
| 4808028 | 25HCB342A30 | CNPH*4221A** | 59*N*A100V21**20 | 39,500 | 11.3 | 13.7 | 41,000 | 3.46 | 8.0 | 25,200 | 2.48 |
| 4808029 | 25HCB342A30 | CNPH*4221A** | 59*N*A120V24**22 | 39,500 | 11.5 | 14.0 | 41,000 | 3.48 | 8.0 | 25,200 | 2.50 |
| 4808030 | 25HCB342A30 | CNPH*4221A** | 59*P5A060E17**14 | 39,500 | 11.0 | 13.3 | 41,500 | 3.46 | 8.0 | 25,600 | 2.46 |
| 4808031 | 25HCB342A30 | CNPH*4221A** | 59*P5A080E17**16 | 40,000 | 11.2 | 13.5 | 41,500 | 3.50 | 8.0 | 25,600 | 2.48 |
| 4808032 | 25HCB342A30 | CNPH*4221A** | 59*P5A100E21**16 | 39,500 | 11.3 | 13.7 | 41,000 | 3.46 | 8.0 | 25,400 | 2.48 |
| 4808033 | 25HCB342A30 | CNPH*4221A** | 59*P5A120E24**22 | 40,000 | 11.5 | 14.0 | 41,500 | 3.56 | 8.2 | 25,400 | 2.52 |
| 4209837 | 25HCB342A30 | CNPH*4221A** | OVLAAB048112 | 40,000 | 11.0 | 13.2 | 42,000 | 3.52 | 8.0 | 25,800 | 2.48 |
| 4209838 | 25HCB342A30 | CNPH*4221A** | OVLAAB060154 | 41,000 | 11.2 | 13.5 | 42,000 | 3.66 | 8.3 | 26,000 | 2.54 |
| 4209836 | 25HCB342A30 | CNPH*4221A** | OVMAAB042112 | 40,000 | 11.0 | 13.2 | 41,500 | 3.50 | 8.0 | 25,600 | 2.48 |
| 3034108 | 25HCB342A30 | CNPH*4221A**+TDR | | 40,000 | 10.4 | 13.0 | 42,500 | 3.50 | 8.0 | 26,200 | 2.46 |
| 3685192 | 25HCB342A30 | CNPH*4321A** | 58CV(A,X)070−12 | 41,000 | 11.5 | 14.0 | 42,000 | 3.70 | 8.2 | 25,600 | 2.56 |
| 3685193 | 25HCB342A30 | CNPH*4321A** | 58CV(A,X)090−16 | 41,500 | 11.5 | 14.5 | 41,500 | 3.76 | 8.3 | 25,400 | 2.60 |
| 3685194 | 25HCB342A30 | CNPH*4321A** | 58CV(A,X)110−20 | 41,500 | 11.5 | 14.5 | 41,500 | 3.76 | 8.4 | 25,400 | 2.60 |
| 3685195 | 25HCB342A30 | CNPH*4321A** | 58CV(A,X)135−22 | 41,500 | 12.0 | 14.5 | 41,500 | 3.80 | 8.4 | 25,400 | 2.62 |
| 3685196 | 25HCB342A30 | CNPH*4321A** | 58CV(A,X)155−22 | 41,500 | 12.0 | 14.5 | 41,500 | 3.78 | 8.4 | 25,400 | 2.62 |
| 3685215 | 25HCB342A30 | CNPH*4321A** | 58HDV080−−20 | 42,000 | 11.5 | 14.0 | 42,000 | 3.82 | 8.5 | 26,000 | 2.60 |
| 3685216 | 25HCB342A30 | CNPH*4321A** | 58HDV100−−20 | 41,500 | 11.5 | 14.0 | 42,000 | 3.80 | 8.4 | 25,600 | 2.60 |
| 3685202 | 25HCB342A30 | CNPH*4321A** | 58ME(B,C)060−12 | 41,500 | 11.5 | 14.0 | 42,000 | 3.80 | 8.4 | 25,800 | 2.60 |
| 3685203 | 25HCB342A30 | CNPH*4321A** | 58ME(B,C)080−12 | 41,500 | 11.5 | 14.0 | 42,000 | 3.80 | 8.4 | 25,800 | 2.60 |
| 3685204 | 25HCB342A30 | CNPH*4321A** | 58ME(B,C)080−16 | 41,500 | 11.5 | 14.0 | 42,000 | 3.78 | 8.4 | 25,600 | 2.60 |
| 3685205 | 25HCB342A30 | CNPH*4321A** | 58ME(B,C)100−20 | 42,000 | 12.0 | 14.5 | 41,500 | 3.82 | 8.5 | 25,600 | 2.64 |
| 3685206 | 25HCB342A30 | CNPH*4321A** | 58ME(B,C)120−20 | 42,000 | 12.0 | 14.5 | 41,500 | 3.86 | 8.5 | 25,600 | 2.64 |
| 3685201 | 25HCB342A30 | CNPH*4321A** | 58MEB040−12 | 42,000 | 11.5 | 14.0 | 42,000 | 3.80 | 8.4 | 25,800 | 2.60 |
| 3685187 | 25HCB342A30 | CNPH*4321A** | 58MV(B,C)060−14 | 41,500 | 11.5 | 14.0 | 42,000 | 3.78 | 8.4 | 25,800 | 2.60 |
| 3685188 | 25HCB342A30 | CNPH*4321A** | 58MV(B,C)080−14 | 41,000 | 11.5 | 14.0 | 42,000 | 3.70 | 8.3 | 25,800 | 2.56 |
| 3685189 | 25HCB342A30 | CNPH*4321A** | 58MV(B,C)080−20 | 41,500 | 11.5 | 14.0 | 42,000 | 3.74 | 8.3 | 25,600 | 2.58 |
| 3685190 | 25HCB342A30 | CNPH*4321A** | 58MV(B,C)100−20 | 41,000 | 11.5 | 14.0 | 41,500 | 3.70 | 8.2 | 25,400 | 2.58 |
| 3685191 | 25HCB342A30 | CNPH*4321A** | 58MV(B,C)120−20 | 41,500 | 11.5 | 14.5 | 41,500 | 3.76 | 8.4 | 25,400 | 2.60 |
| 3685186 | 25HCB342A30 | CNPH*4321A** | 58MVB040−14 | 41,000 | 11.5 | 14.0 | 41,500 | 3.68 | 8.2 | 25,600 | 2.56 |
| 3685197 | 25HCB342A30 | CNPH*4321A** | 58PH*070−16 | 41,500 | 11.2 | 13.5 | 41,500 | 3.70 | 8.3 | 26,200 | 2.54 |
| 3685198 | 25HCB342A30 | CNPH*4321A** | 58PH*090−16 | 41,500 | 11.5 | 14.5 | 41,500 | 3.80 | 8.4 | 25,600 | 2.62 |
| 3685199 | 25HCB342A30 | CNPH*4321A** | 58PH*110−20 | 41,500 | 12.0 | 14.5 | 41,500 | 3.82 | 8.5 | 25,400 | 2.64 |
| 3685200 | 25HCB342A30 | CNPH*4321A** | 58PH*135−20 | 41,500 | 11.5 | 14.5 | 41,500 | 3.80 | 8.4 | 25,600 | 2.62 |
| 4808034 | 25HCB342A30 | CNPH*4321A** | 59*N*A060V17**14 | 40,500 | 11.5 | 14.0 | 42,000 | 3.64 | 8.2 | 25,600 | 2.52 |
| 4808035 | 25HCB342A30 | CNPH*4321A** | 59*N*A080V17**14 | 41,000 | 11.7 | 14.2 | 41,500 | 3.68 | 8.2 | 25,600 | 2.54 |
| 4808036 | 25HCB342A30 | CNPH*4321A** | 59*N*A100V21**20 | 41,000 | 11.8 | 14.5 | 41,500 | 3.72 | 8.5 | 25,400 | 2.56 |
| 4808037 | 25HCB342A30 | CNPH*4321A** | 59*N*A120V24**22 | 41,000 | 12.0 | 14.5 | 41,500 | 3.74 | 8.5 | 25,400 | 2.58 |
| 4808038 | 25HCB342A30 | CNPH*4321A** | 59*P5A060E17**14 | 41,000 | 11.5 | 14.0 | 42,000 | 3.72 | 8.2 | 26,000 | 2.54 |
| 4808039 | 25HCB342A30 | CNPH*4321A** | 59*P5A080E17**16 | 41,500 | 11.7 | 14.2 | 42,000 | 3.76 | 8.2 | 26,000 | 2.56 |
| 4808040 | 25HCB342A30 | CNPH*4321A** | 59*P5A100E21**16 | 41,000 | 11.8 | 14.2 | 42,000 | 3.74 | 8.5 | 25,600 | 2.56 |
| 4808041 | 25HCB342A30 | CNPH*4321A** | 59*P5A120E24**22 | 42,000 | 12.0 | 14.5 | 42,000 | 3.84 | 8.5 | 25,800 | 2.62 |

See notes on pg. 35

# COMBINATION RATINGS CONTINUED

| AHRI Ref. No. | Model Number | Coil Model Number | Furnace Model Number | Cooling Capacity | EER | SEER | High Temp | | HSPF | Low Temp | |
|---|---|---|---|---|---|---|---|---|---|---|---|
| | | | | | | | E Capacity | E COP | | H Capacity | H COP |
| 4209840 | 25HCB342A30 | CNPH*4321A** | OVLAAB048112 | 41,500 | 11.2 | 13.5 | 42,000 | 3.78 | 8.5 | 26,000 | 2.58 |
| 4209841 | 25HCB342A30 | CNPH*4321A** | OVLAAB060154 | 42,000 | 11.5 | 14.5 | 42,000 | 3.90 | 8.6 | 26,200 | 2.64 |
| 4209839 | 25HCB342A30 | CNPH*4321A** | OVMAAB042112 | 41,000 | 11.5 | 14.0 | 42,000 | 3.74 | 8.4 | 25,800 | 2.58 |
| 3685185 | 25HCB342A30 | CNPH*4321A**+TDR | | 41,500 | 11.0 | 13.5 | 42,000 | 3.72 | 8.3 | 26,600 | 2.54 |
| 3034127 | 25HCB342A30 | CNPH*4821A** | 58CV(A,X)070–12 | 40,500 | 11.1 | 13.5 | 41,000 | 3.60 | 8.3 | 25,600 | 2.52 |
| 3034128 | 25HCB342A30 | CNPH*4821A** | 58CV(A,X)090–16 | 41,000 | 11.4 | 14.0 | 41,000 | 3.66 | 8.4 | 25,200 | 2.58 |
| 3034129 | 25HCB342A30 | CNPH*4821A** | 58CV(A,X)110–20 | 41,000 | 11.5 | 14.0 | 41,000 | 3.68 | 8.4 | 25,400 | 2.58 |
| 3034130 | 25HCB342A30 | CNPH*4821A** | 58CV(A,X)135–22 | 41,000 | 11.6 | 14.5 | 41,000 | 3.70 | 8.5 | 25,200 | 2.60 |
| 3034131 | 25HCB342A30 | CNPH*4821A** | 58CV(A,X)155–22 | 41,000 | 11.7 | 14.5 | 41,000 | 3.70 | 8.5 | 25,200 | 2.60 |
| 3685150 | 25HCB342A30 | CNPH*4821A** | 58HDV060––12 | 40,500 | 11.0 | 13.2 | 42,000 | 3.62 | 8.2 | 26,000 | 2.52 |
| 3685151 | 25HCB342A30 | CNPH*4821A** | 58HDV080––20 | 41,000 | 11.2 | 13.5 | 42,000 | 3.72 | 8.4 | 25,800 | 2.58 |
| 3685152 | 25HCB342A30 | CNPH*4821A** | 58HDV100––20 | 41,000 | 11.5 | 14.0 | 42,000 | 3.68 | 8.4 | 25,600 | 2.58 |
| 3618366 | 25HCB342A30 | CNPH*4821A** | 58ME(B,C)040–12 | 41,000 | 11.5 | 14.0 | 42,000 | 3.70 | 8.4 | 25,600 | 2.58 |
| 3121489 | 25HCB342A30 | CNPH*4821A** | 58ME(B,C)060–12 | 41,000 | 11.5 | 14.0 | 42,000 | 3.70 | 8.4 | 25,600 | 2.58 |
| 3121490 | 25HCB342A30 | CNPH*4821A** | 58ME(B,C)080–12 | 41,000 | 11.5 | 14.0 | 42,000 | 3.72 | 8.4 | 25,600 | 2.58 |
| 3121491 | 25HCB342A30 | CNPH*4821A** | 58ME(B,C)080–16 | 41,000 | 11.5 | 14.0 | 41,500 | 3.68 | 8.3 | 25,600 | 2.58 |
| 3121492 | 25HCB342A30 | CNPH*4821A** | 58ME(B,C)100–20 | 41,000 | 11.5 | 14.5 | 41,500 | 3.74 | 8.4 | 25,400 | 2.60 |
| 3121493 | 25HCB342A30 | CNPH*4821A** | 58ME(B,C)120–20 | 41,500 | 11.5 | 14.5 | 41,500 | 3.76 | 8.4 | 25,400 | 2.62 |
| 3121488 | 25HCB342A30 | CNPH*4821A** | 58MEB040–12 | 41,000 | 11.5 | 14.0 | 42,000 | 3.70 | 8.4 | 25,600 | 2.58 |
| 3034122 | 25HCB342A30 | CNPH*4821A** | 58MV(B,C)060–14 | 40,500 | 11.3 | 14.0 | 41,500 | 3.62 | 8.3 | 25,400 | 2.56 |
| 3034123 | 25HCB342A30 | CNPH*4821A** | 58MV(B,C)080–14 | 40,500 | 11.1 | 13.5 | 41,500 | 3.58 | 8.2 | 25,400 | 2.52 |
| 3034124 | 25HCB342A30 | CNPH*4821A** | 58MV(B,C)080–20 | 40,500 | 11.2 | 14.0 | 41,000 | 3.62 | 8.3 | 25,400 | 2.54 |
| 3034125 | 25HCB342A30 | CNPH*4821A** | 58MV(B,C)100–20 | 41,000 | 11.4 | 14.0 | 41,000 | 3.66 | 8.4 | 25,400 | 2.56 |
| 3034126 | 25HCB342A30 | CNPH*4821A** | 58MV(B,C)120–20 | 40,500 | 11.4 | 14.0 | 41,000 | 3.64 | 8.3 | 25,200 | 2.56 |
| 3034184 | 25HCB342A30 | CNPH*4821A** | 58PH*070–16 | 41,000 | 11.0 | 13.5 | 42,000 | 3.62 | 8.2 | 26,000 | 2.52 |
| 3034185 | 25HCB342A30 | CNPH*4821A** | 58PH*090–16 | 41,000 | 11.5 | 14.0 | 41,500 | 3.70 | 8.4 | 25,400 | 2.58 |
| 3034186 | 25HCB342A30 | CNPH*4821A** | 58PH*110–20 | 41,000 | 11.5 | 14.5 | 41,500 | 3.72 | 8.4 | 25,400 | 2.60 |
| 3034187 | 25HCB342A30 | CNPH*4821A** | 58PH*135–20 | 41,000 | 11.5 | 14.0 | 41,500 | 3.72 | 8.4 | 25,400 | 2.60 |
| 3685172 | 25HCB342A30 | CNPH*4821A** | 58VLR120–20 | 40,500 | 11.5 | 14.0 | 41,500 | 3.64 | 8.2 | 25,200 | 2.58 |
| 3685171 | 25HCB342A30 | CNPH*4821A** | 58VMR120–20 | 40,500 | 11.5 | 14.0 | 41,500 | 3.60 | 8.2 | 25,200 | 2.56 |
| 4808042 | 25HCB342A30 | CNPH*4821A** | 59*N*A060V17**14 | 40,000 | 11.4 | 13.7 | 41,500 | 3.52 | 8.0 | 25,600 | 2.50 |
| 4808043 | 25HCB342A30 | CNPH*4821A** | 59*N*A080V17**14 | 40,500 | 11.5 | 14.0 | 41,500 | 3.56 | 8.2 | 25,400 | 2.52 |
| 4808044 | 25HCB342A30 | CNPH*4821A** | 59*N*A100V21**20 | 40,500 | 11.7 | 14.2 | 41,500 | 3.60 | 8.2 | 25,400 | 2.54 |
| 4808045 | 25HCB342A30 | CNPH*4821A** | 59*N*A120V24**22 | 40,500 | 11.8 | 14.5 | 41,000 | 3.62 | 8.2 | 25,200 | 2.56 |
| 4808046 | 25HCB342A30 | CNPH*4821A** | 59*P5A060E17**14 | 40,500 | 11.4 | 13.7 | 42,000 | 3.60 | 8.2 | 25,800 | 2.52 |
| 4808047 | 25HCB342A30 | CNPH*4821A** | 59*P5A080E17**16 | 41,000 | 11.5 | 14.0 | 42,000 | 3.66 | 8.2 | 25,800 | 2.54 |
| 4808048 | 25HCB342A30 | CNPH*4821A** | 59*P5A100E21**16 | 40,500 | 11.5 | 14.0 | 41,500 | 3.62 | 8.2 | 25,600 | 2.54 |
| 4808049 | 25HCB342A30 | CNPH*4821A** | 59*P5A120E24**22 | 41,000 | 11.8 | 14.5 | 42,000 | 3.74 | 8.5 | 25,600 | 2.58 |
| 4209843 | 25HCB342A30 | CNPH*4821A** | OVLAAB048112 | 41,000 | 11.2 | 13.5 | 42,000 | 3.68 | 8.3 | 25,800 | 2.54 |
| 4209844 | 25HCB342A30 | CNPH*4821A** | OVLAAB060154 | 41,500 | 11.5 | 14.5 | 42,000 | 3.82 | 8.5 | 26,000 | 2.60 |
| 4209842 | 25HCB342A30 | CNPH*4821A** | OVMAAB042112 | 40,500 | 11.2 | 13.5 | 41,500 | 3.64 | 8.2 | 25,600 | 2.54 |
| 3034120 | 25HCB342A30 | CNPH*4821A**+TDR | | 41,000 | 10.6 | 13.0 | 42,000 | 3.64 | 8.3 | 26,400 | 2.52 |
| 3121473 | 25HCB342A30 | CNPV*4217A** | 58CV(A,X)090–16 | 40,500 | 11.5 | 13.5 | 41,500 | 3.56 | 8.2 | 25,400 | 2.54 |
| 4209851 | 25HCB342A30 | CNPV*4217A** | 58HDV060––12 | 40,000 | 11.0 | 13.2 | 42,000 | 3.52 | 8.0 | 26,000 | 2.48 |
| 3618364 | 25HCB342A30 | CNPV*4217A** | 58ME(B,C)040–12 | 40,500 | 11.0 | 13.5 | 41,500 | 3.60 | 8.3 | 25,600 | 2.54 |
| 3121476 | 25HCB342A30 | CNPV*4217A** | 58ME(B,C)060–12 | 40,500 | 11.0 | 13.5 | 42,000 | 3.60 | 8.2 | 25,600 | 2.54 |
| 3121477 | 25HCB342A30 | CNPV*4217A** | 58ME(B,C)080–12 | 40,500 | 11.0 | 13.5 | 41,500 | 3.60 | 8.3 | 25,600 | 2.54 |
| 3121478 | 25HCB342A30 | CNPV*4217A** | 58ME(B,C)080–16 | 40,500 | 11.0 | 13.5 | 41,500 | 3.56 | 8.2 | 25,400 | 2.52 |
| 3121475 | 25HCB342A30 | CNPV*4217A** | 58MEB040–12 | 40,500 | 11.0 | 13.5 | 41,500 | 3.60 | 8.3 | 25,600 | 2.54 |
| 3121472 | 25HCB342A30 | CNPV*4217A** | 58MV(B,C)060–14 | 40,500 | 11.0 | 13.5 | 41,500 | 3.58 | 8.2 | 25,600 | 2.52 |
| 3121474 | 25HCB342A30 | CNPV*4217A** | 58PH*070–16 | 40,000 | 10.5 | 13.0 | 42,000 | 3.50 | 8.1 | 25,800 | 2.48 |
| 3758816 | 25HCB342A30 | CNPV*4217A** | 58UVB060–14 | 40,500 | 11.0 | 13.5 | 41,500 | 3.58 | 8.2 | 25,600 | 2.52 |
| 4808002 | 25HCB342A30 | CNPV*4217A** | 59*N*A060V17**14 | 39,500 | 11.1 | 13.5 | 41,500 | 3.46 | 8.0 | 25,600 | 2.46 |
| 4808003 | 25HCB342A30 | CNPV*4217A** | 59*N*A080V17**14 | 40,000 | 11.3 | 13.7 | 41,500 | 3.48 | 8.0 | 25,400 | 2.48 |
| 4808004 | 25HCB342A30 | CNPV*4217A** | 59*P5A060E17**14 | 40,000 | 11.2 | 13.5 | 41,500 | 3.52 | 8.0 | 25,800 | 2.48 |
| 4808005 | 25HCB342A30 | CNPV*4217A** | 59*P5A080E17**16 | 40,500 | 11.3 | 13.7 | 41,500 | 3.56 | 8.2 | 25,800 | 2.50 |
| 4209833 | 25HCB342A30 | CNPV*4217A** | OVMAAB042112 | 40,000 | 11.0 | 13.5 | 41,500 | 3.54 | 8.0 | 25,600 | 2.50 |
| 3121471 | 25HCB342A30 | CNPV*4217A**+TDR | | 40,500 | 10.5 | 13.0 | 42,000 | 3.58 | 8.2 | 26,400 | 2.50 |
| 3034167 | 25HCB342A30 | CNPV*4221A** | 58CV(A,X)090–16 | 40,500 | 11.5 | 14.0 | 41,500 | 3.44 | 7.7 | 25,600 | 2.42 |
| 3034097 | 25HCB342A30 | CNPV*4221A** | 58CV(A,X)110–20 | 40,000 | 11.5 | 14.5 | 41,000 | 3.56 | 8.2 | 25,000 | 2.56 |
| 4209852 | 25HCB342A30 | CNPV*4221A** | 58HDV060––12 | 40,000 | 10.9 | 13.0 | 42,000 | 3.48 | 7.8 | 25,800 | 2.46 |
| 4209853 | 25HCB342A30 | CNPV*4221A** | 58HDV080––20 | 40,500 | 11.2 | 13.5 | 41,500 | 3.56 | 8.0 | 25,600 | 2.52 |
| 3121479 | 25HCB342A30 | CNPV*4221A** | 58ME(B,C)100–20 | 40,000 | 11.5 | 13.5 | 41,000 | 3.54 | 8.2 | 25,200 | 2.54 |
| 3034094 | 25HCB342A30 | CNPV*4221A** | 58MV(B,C)080–14 | 39,500 | 11.1 | 13.5 | 41,000 | 3.48 | 8.0 | 25,200 | 2.50 |
| 3034095 | 25HCB342A30 | CNPV*4221A** | 58MV(B,C)080–20 | 40,000 | 11.2 | 14.0 | 41,000 | 3.50 | 8.1 | 25,200 | 2.52 |
| 3034096 | 25HCB342A30 | CNPV*4221A** | 58MV(B,C)100–20 | 40,000 | 11.4 | 14.0 | 41,000 | 3.54 | 8.1 | 25,000 | 2.54 |
| 3034175 | 25HCB342A30 | CNPV*4221A** | 58PH*090–16 | 40,000 | 11.2 | 13.5 | 41,000 | 3.52 | 8.1 | 25,200 | 2.52 |
| 3034176 | 25HCB342A30 | CNPV*4221A** | 58PH*110–20 | 40,000 | 11.2 | 14.0 | 41,000 | 3.52 | 8.1 | 25,200 | 2.54 |
| 3758770 | 25HCB342A30 | CNPV*4221A** | 58UVB080–14 | 39,500 | 11.1 | 13.5 | 41,000 | 3.48 | 8.0 | 25,200 | 2.50 |
| 3758771 | 25HCB342A30 | CNPV*4221A** | 58UVB080–20 | 40,000 | 11.2 | 14.0 | 41,000 | 3.50 | 8.1 | 25,200 | 2.52 |
| 3758772 | 25HCB342A30 | CNPV*4221A** | 58UVB100–20 | 40,000 | 11.4 | 14.0 | 41,000 | 3.54 | 8.1 | 25,000 | 2.54 |
| 3685164 | 25HCB342A30 | CNPV*4221A** | 58VLR120–20 | 40,000 | 11.2 | 13.5 | 41,000 | 3.50 | 8.0 | 25,200 | 2.52 |
| 3685163 | 25HCB342A30 | CNPV*4221A** | 58VMR120–20 | 39,500 | 11.2 | 13.5 | 41,000 | 3.48 | 8.0 | 25,200 | 2.50 |
| 4808006 | 25HCB342A30 | CNPV*4221A** | 59*N*A060V17**14 | 39,500 | 11.0 | 13.3 | 41,000 | 3.40 | 7.8 | 25,400 | 2.44 |
| 4808007 | 25HCB342A30 | CNPV*4221A** | 59*N*A080V17**14 | 39,500 | 11.2 | 13.5 | 41,000 | 3.44 | 7.8 | 25,400 | 2.46 |
| 4808008 | 25HCB342A30 | CNPV*4221A** | 59*N*A100V21**20 | 39,500 | 11.3 | 13.7 | 41,000 | 3.46 | 8.0 | 25,200 | 2.48 |
| 4808009 | 25HCB342A30 | CNPV*4221A** | 59*P5A060E17**14 | 39,500 | 11.0 | 13.3 | 41,500 | 3.46 | 8.0 | 25,600 | 2.46 |
| 4808010 | 25HCB342A30 | CNPV*4221A** | 59*P5A080E17**16 | 40,000 | 11.2 | 13.5 | 41,500 | 3.50 | 8.0 | 25,600 | 2.48 |
| 4808011 | 25HCB342A30 | CNPV*4221A** | 59*P5A100E21**16 | 39,500 | 11.3 | 13.7 | 41,000 | 3.46 | 8.0 | 25,400 | 2.48 |

See notes on pg. 35

# COMBINATION RATINGS CONTINUED

| AHRI Ref. No. | Model Number | Coil Model Number | Furnace Model Number | Cooling Capacity | EER | SEER | High Temp | | HSPF | Low Temp | |
|---|---|---|---|---|---|---|---|---|---|---|---|
| | | | | | | | E Capacity | E COP | | H Capacity | H COP |
| 4209834 | 25HCB342A30 | CNPV*4221A** | OVLAAB048112 | 40,000 | 11.0 | 13.2 | 42,000 | 3.52 | 8.0 | 25,800 | 2.48 |
| 3034093 | 25HCB342A30 | CNPV*4221A**+TDR | | 40,000 | 10.4 | 13.0 | 42,500 | 3.50 | 8.0 | 26,200 | 2.46 |
| 3685181 | 25HCB342A30 | CNPV*4324A** | 58CV(A,X)135–22 | 41,500 | 12.0 | 14.5 | 41,500 | 3.80 | 8.5 | 25,400 | 2.64 |
| 3685182 | 25HCB342A30 | CNPV*4324A** | 58CV(A,X)155–22 | 41,500 | 12.0 | 14.5 | 41,500 | 3.80 | 8.5 | 25,200 | 2.64 |
| 4209854 | 25HCB342A30 | CNPV*4324A** | 58HDV080––20 | 42,000 | 11.5 | 14.5 | 42,000 | 3.86 | 8.5 | 26,000 | 2.62 |
| 4149680 | 25HCB342A30 | CNPV*4324A** | 58HDV100––20 | 42,000 | 11.5 | 14.5 | 42,000 | 3.82 | 8.5 | 25,600 | 2.62 |
| 3685214 | 25HCB342A30 | CNPV*4324A** | 58HDV100––20 (DNFLW ONLY) | 42,000 | 11.5 | 14.5 | 42,000 | 3.82 | 8.5 | 25,600 | 2.62 |
| 3685184 | 25HCB342A30 | CNPV*4324A** | 58ME(B,C)120–20 | 42,000 | 12.0 | 14.5 | 41,500 | 3.88 | 8.6 | 25,600 | 2.66 |
| 3685180 | 25HCB342A30 | CNPV*4324A** | 58MV(B,C)120–20 | 41,500 | 11.5 | 14.5 | 41,500 | 3.76 | 8.5 | 25,400 | 2.60 |
| 3685179 | 25HCB342A30 | CNPV*4324A** | 58MVB040–14 | 41,000 | 11.5 | 14.0 | 41,500 | 3.70 | 8.5 | 25,600 | 2.58 |
| 3685183 | 25HCB342A30 | CNPV*4324A** | 58PH*135–20 | 42,000 | 12.0 | 14.5 | 41,500 | 3.84 | 8.5 | 25,600 | 2.64 |
| 3685292 | 25HCB342A30 | CNPV*4324A** | 58UVB120–20 | 41,500 | 11.5 | 14.5 | 41,500 | 3.76 | 8.5 | 25,400 | 2.60 |
| 4808012 | 25HCB342A30 | CNPV*4324A** | 59*N*A100V21**20 | 41,000 | 11.9 | 14.5 | 41,500 | 3.72 | 8.5 | 25,400 | 2.58 |
| 4808013 | 25HCB342A30 | CNPV*4324A** | 59*N*A120V24**22 | 41,000 | 12.0 | 14.5 | 41,500 | 3.74 | 8.5 | 25,200 | 2.60 |
| 4808014 | 25HCB342A30 | CNPV*4324A** | 59*P5A100E21**16 | 41,500 | 11.8 | 14.5 | 42,000 | 3.76 | 8.5 | 25,600 | 2.58 |
| 4808015 | 25HCB342A30 | CNPV*4324A** | 59*P5A120E24**22 | 42,000 | 12.0 | 14.5 | 42,000 | 3.88 | 8.8 | 25,800 | 2.62 |
| 3685178 | 25HCB342A30 | CNPV*4324A**+TDR | | 41,500 | 11.0 | 13.5 | 42,000 | 3.72 | 8.5 | 26,600 | 2.54 |
| 3034102 | 25HCB342A30 | CNPV*4821A** | 58CV(A,X)110–20 | 41,000 | 11.5 | 14.0 | 41,000 | 3.68 | 8.4 | 25,400 | 2.58 |
| 4209855 | 25HCB342A30 | CNPV*4821A** | 58HDV060––12 | 41,000 | 11.2 | 13.5 | 42,000 | 3.64 | 8.2 | 26,000 | 2.52 |
| 4209856 | 25HCB342A30 | CNPV*4821A** | 58HDV080––20 | 41,500 | 11.5 | 14.0 | 42,000 | 3.76 | 8.4 | 25,800 | 2.58 |
| 3121480 | 25HCB342A30 | CNPV*4821A** | 58ME(B,C)100–20 | 41,000 | 11.5 | 14.5 | 41,500 | 3.74 | 8.4 | 25,400 | 2.60 |
| 3034099 | 25HCB342A30 | CNPV*4821A** | 58MV(B,C)080–14 | 40,500 | 11.1 | 13.5 | 41,500 | 3.58 | 8.2 | 25,400 | 2.52 |
| 3034100 | 25HCB342A30 | CNPV*4821A** | 58MV(B,C)080–20 | 40,500 | 11.2 | 14.0 | 41,000 | 3.62 | 8.3 | 25,400 | 2.54 |
| 3034101 | 25HCB342A30 | CNPV*4821A** | 58MV(B,C)100–20 | 40,500 | 11.4 | 14.0 | 41,000 | 3.66 | 8.4 | 25,400 | 2.56 |
| 3034177 | 25HCB342A30 | CNPV*4821A** | 58PH*090–16 | 41,000 | 11.5 | 14.0 | 41,500 | 3.70 | 8.4 | 25,400 | 2.58 |
| 3034178 | 25HCB342A30 | CNPV*4821A** | 58PH*110–20 | 41,000 | 11.5 | 14.5 | 41,500 | 3.72 | 8.4 | 25,400 | 2.60 |
| 3758773 | 25HCB342A30 | CNPV*4821A** | 58UVB080–14 | 40,500 | 11.1 | 13.5 | 41,500 | 3.58 | 8.2 | 25,400 | 2.52 |
| 3758774 | 25HCB342A30 | CNPV*4821A** | 58UVB080–20 | 40,500 | 11.2 | 14.0 | 41,000 | 3.62 | 8.3 | 25,400 | 2.54 |
| 3758775 | 25HCB342A30 | CNPV*4821A** | 58UVB100–20 | 40,500 | 11.4 | 14.0 | 41,000 | 3.66 | 8.4 | 25,400 | 2.56 |
| 3685168 | 25HCB342A30 | CNPV*4821A** | 58VLR120–20 | 40,500 | 11.5 | 14.0 | 41,500 | 3.64 | 8.2 | 25,200 | 2.58 |
| 3685167 | 25HCB342A30 | CNPV*4821A** | 58VMR120–20 | 40,500 | 11.5 | 14.0 | 41,500 | 3.60 | 8.2 | 25,200 | 2.56 |
| 4808016 | 25HCB342A30 | CNPV*4821A** | 59*N*A060V17**14 | 40,000 | 11.4 | 13.7 | 41,500 | 3.52 | 8.0 | 25,600 | 2.50 |
| 4808017 | 25HCB342A30 | CNPV*4821A** | 59*N*A080V17**14 | 40,500 | 11.5 | 14.0 | 41,500 | 3.56 | 8.2 | 25,400 | 2.52 |
| 4808018 | 25HCB342A30 | CNPV*4821A** | 59*N*A100V21**20 | 40,500 | 11.7 | 14.2 | 41,500 | 3.60 | 8.2 | 25,400 | 2.54 |
| 4808019 | 25HCB342A30 | CNPV*4821A** | 59*P5A060E17**14 | 40,500 | 11.4 | 13.7 | 42,000 | 3.60 | 8.2 | 25,800 | 2.52 |
| 4808020 | 25HCB342A30 | CNPV*4821A** | 59*P5A080E17**16 | 41,000 | 11.5 | 14.0 | 42,000 | 3.66 | 8.2 | 25,800 | 2.54 |
| 4808021 | 25HCB342A30 | CNPV*4821A** | 59*P5A100E21**16 | 40,500 | 11.5 | 14.0 | 41,500 | 3.62 | 8.2 | 25,600 | 2.54 |
| 4209835 | 25HCB342A30 | CNPV*4821A** | OVLAAB048112 | 41,000 | 11.2 | 13.5 | 42,000 | 3.68 | 8.3 | 25,800 | 2.54 |
| 3034098 | 25HCB342A30 | CNPV*4821A**+TDR | | 41,000 | 10.6 | 13.0 | 42,000 | 3.64 | 8.3 | 26,400 | 2.52 |
| 3034106 | 25HCB342A30 | CNPV*4824A** | 58CV(A,X)135–22 | 41,000 | 11.6 | 14.5 | 41,000 | 3.70 | 8.5 | 25,200 | 2.60 |
| 3034107 | 25HCB342A30 | CNPV*4824A** | 58CV(A,X)155–22 | 41,000 | 11.6 | 14.5 | 41,000 | 3.70 | 8.5 | 25,200 | 2.60 |
| 4209857 | 25HCB342A30 | CNPV*4824A** | 58HDV080––20 | 41,500 | 11.5 | 14.0 | 42,000 | 3.76 | 8.4 | 25,800 | 2.58 |
| 4149677 | 25HCB342A30 | CNPV*4824A** | 58HDV100––20 | 41,000 | 11.5 | 14.0 | 42,000 | 3.68 | 8.4 | 25,600 | 2.58 |
| 3685147 | 25HCB342A30 | CNPV*4824A** | 58HDV100––20 (DNFLW ONLY) | 41,000 | 11.5 | 14.0 | 42,000 | 3.68 | 8.4 | 25,600 | 2.58 |
| 3121481 | 25HCB342A30 | CNPV*4824A** | 58ME(B,C)120–20 | 41,500 | 11.5 | 14.5 | 41,500 | 3.76 | 8.4 | 25,400 | 2.62 |
| 3034105 | 25HCB342A30 | CNPV*4824A** | 58MV(B,C)120–20 | 40,500 | 11.4 | 14.0 | 41,000 | 3.64 | 8.3 | 25,200 | 2.56 |
| 3034179 | 25HCB342A30 | CNPV*4824A** | 58PH*135–20 | 41,000 | 11.5 | 14.0 | 41,500 | 3.72 | 8.4 | 25,400 | 2.60 |
| 3758776 | 25HCB342A30 | CNPV*4824A** | 58UVB120–20 | 40,500 | 11.4 | 14.0 | 41,000 | 3.64 | 8.3 | 25,200 | 2.56 |
| 4808022 | 25HCB342A30 | CNPV*4824A** | 59*N*A100V21**20 | 40,500 | 11.7 | 14.2 | 41,500 | 3.60 | 8.2 | 25,400 | 2.54 |
| 4808023 | 25HCB342A30 | CNPV*4824A** | 59*N*A120V24**22 | 40,500 | 11.8 | 14.5 | 41,000 | 3.62 | 8.2 | 25,200 | 2.56 |
| 4808024 | 25HCB342A30 | CNPV*4824A** | 59*P5A100E21**16 | 40,500 | 11.5 | 14.0 | 41,500 | 3.62 | 8.2 | 25,600 | 2.54 |
| 4808025 | 25HCB342A30 | CNPV*4824A** | 59*P5A120E24**22 | 41,000 | 11.8 | 14.5 | 42,000 | 3.74 | 8.5 | 25,600 | 2.58 |
| 3034103 | 25HCB342A30 | CNPV*4824A**+TDR | | 41,000 | 10.6 | 13.0 | 42,000 | 3.64 | 8.3 | 26,400 | 2.52 |
| 3034140 | 25HCB342A30 | CSPH*4212A** | 58CV(A,X)070–12 | 39,500 | 11.1 | 13.5 | 41,500 | 3.60 | 8.2 | 25,600 | 2.52 |
| 3034141 | 25HCB342A30 | CSPH*4212A** | 58CV(A,X)090–16 | 40,000 | 11.4 | 14.0 | 41,000 | 3.66 | 8.4 | 25,400 | 2.56 |
| 3034142 | 25HCB342A30 | CSPH*4212A** | 58CV(A,X)110–20 | 40,000 | 11.4 | 14.0 | 41,000 | 3.66 | 8.4 | 25,400 | 2.58 |
| 3034143 | 25HCB342A30 | CSPH*4212A** | 58CV(A,X)135–22 | 40,000 | 11.5 | 14.5 | 41,000 | 3.70 | 8.4 | 25,200 | 2.60 |
| 3034144 | 25HCB342A30 | CSPH*4212A** | 58CV(A,X)155–22 | 40,000 | 11.6 | 14.5 | 41,000 | 3.68 | 8.4 | 25,200 | 2.60 |
| 3685153 | 25HCB342A30 | CSPH*4212A** | 58HDV060––12 | 40,500 | 11.0 | 13.2 | 42,000 | 3.60 | 8.2 | 26,000 | 2.52 |
| 3685154 | 25HCB342A30 | CSPH*4212A** | 58HDV080––20 | 41,000 | 11.2 | 13.5 | 42,000 | 3.70 | 8.4 | 25,800 | 2.56 |
| 3685155 | 25HCB342A30 | CSPH*4212A** | 58HDV100––20 | 41,000 | 11.2 | 13.5 | 42,000 | 3.66 | 8.4 | 25,600 | 2.56 |
| 3618367 | 25HCB342A30 | CSPH*4212A** | 58ME(B,C)040–12 | 41,000 | 11.5 | 14.0 | 42,000 | 3.70 | 8.3 | 25,600 | 2.58 |
| 3121495 | 25HCB342A30 | CSPH*4212A** | 58ME(B,C)060–12 | 41,000 | 11.5 | 14.0 | 42,000 | 3.70 | 8.3 | 25,600 | 2.56 |
| 3121496 | 25HCB342A30 | CSPH*4212A** | 58ME(B,C)080–12 | 41,000 | 11.5 | 14.0 | 42,000 | 3.70 | 8.3 | 25,600 | 2.58 |
| 3121497 | 25HCB342A30 | CSPH*4212A** | 58ME(B,C)080–16 | 41,000 | 11.5 | 14.0 | 41,500 | 3.66 | 8.3 | 25,600 | 2.56 |
| 3121498 | 25HCB342A30 | CSPH*4212A** | 58ME(B,C)100–20 | 41,000 | 11.5 | 14.0 | 41,500 | 3.70 | 8.3 | 25,400 | 2.60 |
| 3121499 | 25HCB342A30 | CSPH*4212A** | 58ME(B,C)120–20 | 41,500 | 11.5 | 14.5 | 41,500 | 3.74 | 8.4 | 25,400 | 2.60 |
| 3121494 | 25HCB342A30 | CSPH*4212A** | 58MEB040–12 | 41,000 | 11.5 | 14.0 | 42,000 | 3.70 | 8.3 | 25,600 | 2.58 |
| 3034135 | 25HCB342A30 | CSPH*4212A** | 58MV(B,C)060–14 | 40,000 | 11.3 | 14.0 | 41,500 | 3.62 | 8.3 | 25,400 | 2.54 |
| 3034136 | 25HCB342A30 | CSPH*4212A** | 58MV(B,C)080–14 | 39,500 | 11.1 | 13.5 | 41,500 | 3.58 | 8.2 | 25,600 | 2.52 |
| 3034137 | 25HCB342A30 | CSPH*4212A** | 58MV(B,C)080–20 | 40,000 | 11.2 | 14.0 | 41,500 | 3.62 | 8.3 | 25,600 | 2.54 |
| 3034138 | 25HCB342A30 | CSPH*4212A** | 58MV(B,C)100–20 | 40,000 | 11.3 | 14.0 | 41,000 | 3.64 | 8.3 | 25,400 | 2.56 |
| 3034139 | 25HCB342A30 | CSPH*4212A** | 58MV(B,C)120–20 | 40,000 | 11.4 | 14.0 | 41,000 | 3.62 | 8.3 | 25,400 | 2.56 |
| 3034188 | 25HCB342A30 | CSPH*4212A** | 58PH*070–16 | 41,000 | 11.0 | 13.5 | 42,000 | 3.60 | 8.2 | 26,000 | 2.52 |
| 3034189 | 25HCB342A30 | CSPH*4212A** | 58PH*090–16 | 41,000 | 11.5 | 14.0 | 41,500 | 3.68 | 8.2 | 25,400 | 2.58 |
| 3034190 | 25HCB342A30 | CSPH*4212A** | 58PH*110–20 | 41,000 | 11.5 | 14.0 | 41,500 | 3.70 | 8.4 | 25,400 | 2.58 |
| 3034191 | 25HCB342A30 | CSPH*4212A** | 58PH*135–20 | 41,000 | 11.5 | 14.0 | 41,500 | 3.68 | 8.4 | 25,400 | 2.58 |

See notes on pg. 35

# COMBINATION RATINGS CONTINUED

| AHRI Ref. No. | Model Number | Coil Model Number | Furnace Model Number | Cooling Capacity | EER | SEER | High Temp | | HSPF | Low Temp | |
|---|---|---|---|---|---|---|---|---|---|---|---|
| | | | | | | | E Capacity | E COP | | H Capacity | H COP |
| 3685174 | 25HCB342A30 | CSPH*4212A** | 58VLR120−20 | 40,500 | 11.5 | 14.0 | 41,500 | 3.62 | 8.2 | 25,400 | 2.56 |
| 3685173 | 25HCB342A30 | CSPH*4212A** | 58VMR120−20 | 40,500 | 11.5 | 14.0 | 41,500 | 3.60 | 8.2 | 25,400 | 2.56 |
| 4808050 | 25HCB342A30 | CSPH*4212A** | 59*N*A060V17**14 | 40,500 | 11.3 | 13.7 | 41,500 | 3.52 | 8.0 | 25,600 | 2.50 |
| 4808051 | 25HCB342A30 | CSPH*4212A** | 59*N*A080V17**14 | 40,500 | 11.5 | 14.0 | 41,500 | 3.56 | 8.2 | 25,400 | 2.52 |
| 4808052 | 25HCB342A30 | CSPH*4212A** | 59*N*A100V21**20 | 40,500 | 11.7 | 14.2 | 41,500 | 3.58 | 8.2 | 25,400 | 2.54 |
| 4808053 | 25HCB342A30 | CSPH*4212A** | 59*N*A120V24**22 | 40,500 | 11.8 | 14.2 | 41,000 | 3.60 | 8.2 | 25,200 | 2.54 |
| 4808054 | 25HCB342A30 | CSPH*4212A** | 59*P5A060E17**14 | 40,500 | 11.4 | 13.7 | 42,000 | 3.60 | 8.2 | 25,800 | 2.52 |
| 4808055 | 25HCB342A30 | CSPH*4212A** | 59*P5A080E17**16 | 41,000 | 11.5 | 14.0 | 42,000 | 3.64 | 8.2 | 25,800 | 2.54 |
| 4808056 | 25HCB342A30 | CSPH*4212A** | 59*P5A100E21**16 | 40,500 | 11.5 | 14.0 | 41,500 | 3.60 | 8.2 | 25,600 | 2.54 |
| 4808057 | 25HCB342A30 | CSPH*4212A** | 59*P5A120E24**22 | 41,000 | 11.8 | 14.2 | 42,000 | 3.72 | 8.5 | 25,600 | 2.58 |
| 4209846 | 25HCB342A30 | CSPH*4212A** | OVLAAB048112 | 41,000 | 11.2 | 13.5 | 42,000 | 3.66 | 8.2 | 26,000 | 2.54 |
| 4209847 | 25HCB342A30 | CSPH*4212A** | OVLAAB060154 | 42,000 | 11.5 | 14.0 | 42,000 | 3.82 | 8.5 | 26,000 | 2.60 |
| 4209845 | 25HCB342A30 | CSPH*4212A** | OVMAAB042112 | 41,000 | 11.2 | 13.5 | 42,000 | 3.62 | 8.2 | 25,600 | 2.54 |
| 3034133 | 25HCB342A30 | CSPH*4212A**+TDR | | 40,000 | 10.7 | 13.0 | 42,500 | 3.66 | 8.3 | 26,400 | 2.52 |
| 3034152 | 25HCB342A30 | CSPH*4812A** | 58CV(A,X)070−12 | 40,500 | 11.1 | 13.5 | 41,000 | 3.64 | 8.3 | 25,600 | 2.54 |
| 3034153 | 25HCB342A30 | CSPH*4812A** | 58CV(A,X)090−16 | 40,500 | 11.4 | 14.0 | 41,000 | 3.70 | 8.4 | 25,400 | 2.58 |
| 3034154 | 25HCB342A30 | CSPH*4812A** | 58CV(A,X)110−20 | 41,000 | 11.4 | 14.0 | 41,000 | 3.70 | 8.5 | 25,400 | 2.58 |
| 3034155 | 25HCB342A30 | CSPH*4812A** | 58CV(A,X)135−22 | 41,000 | 11.6 | 14.5 | 41,000 | 3.74 | 8.5 | 25,400 | 2.60 |
| 3034156 | 25HCB342A30 | CSPH*4812A** | 58CV(A,X)155−22 | 41,000 | 11.6 | 14.5 | 41,000 | 3.72 | 8.5 | 25,200 | 2.60 |
| 3685156 | 25HCB342A30 | CSPH*4812A** | 58HDV060−−12 | 41,000 | 11.0 | 13.2 | 42,000 | 3.64 | 8.3 | 26,000 | 2.52 |
| 3685157 | 25HCB342A30 | CSPH*4812A** | 58HDV080−−20 | 41,500 | 11.2 | 13.5 | 42,000 | 3.74 | 8.4 | 25,800 | 2.58 |
| 3685158 | 25HCB342A30 | CSPH*4812A** | 58HDV100−−20 | 41,000 | 11.2 | 13.5 | 42,000 | 3.70 | 8.4 | 25,600 | 2.58 |
| 3618359 | 25HCB342A30 | CSPH*4812A** | 58ME(B,C)040−12 | 41,500 | 11.5 | 14.0 | 42,000 | 3.74 | 8.4 | 25,800 | 2.58 |
| 3121501 | 25HCB342A30 | CSPH*4812A** | 58ME(B,C)060−12 | 41,500 | 11.5 | 14.0 | 42,000 | 3.72 | 8.4 | 25,800 | 2.58 |
| 3121502 | 25HCB342A30 | CSPH*4812A** | 58ME(B,C)080−12 | 41,500 | 11.5 | 14.0 | 42,000 | 3.72 | 8.4 | 25,600 | 2.58 |
| 3121503 | 25HCB342A30 | CSPH*4812A** | 58ME(B,C)080−16 | 41,000 | 11.5 | 14.0 | 41,500 | 3.70 | 8.3 | 25,600 | 2.58 |
| 3121504 | 25HCB342A30 | CSPH*4812A** | 58ME(B,C)100−20 | 41,500 | 11.5 | 14.5 | 41,500 | 3.74 | 8.4 | 25,400 | 2.60 |
| 3121505 | 25HCB342A30 | CSPH*4812A** | 58ME(B,C)120−20 | 41,500 | 11.5 | 14.5 | 41,500 | 3.78 | 8.4 | 25,400 | 2.62 |
| 3121500 | 25HCB342A30 | CSPH*4812A** | 58MEB040−12 | 41,500 | 11.5 | 14.0 | 42,000 | 3.74 | 8.4 | 25,800 | 2.58 |
| 3034147 | 25HCB342A30 | CSPH*4812A** | 58MV(B,C)060−14 | 40,500 | 11.3 | 14.0 | 41,000 | 3.66 | 8.4 | 25,400 | 2.56 |
| 3034148 | 25HCB342A30 | CSPH*4812A** | 58MV(B,C)080−14 | 40,500 | 11.1 | 13.5 | 41,500 | 3.62 | 8.3 | 25,600 | 2.52 |
| 3034149 | 25HCB342A30 | CSPH*4812A** | 58MV(B,C)080−20 | 40,500 | 11.3 | 14.0 | 41,000 | 3.66 | 8.4 | 25,600 | 2.56 |
| 3034150 | 25HCB342A30 | CSPH*4812A** | 58MV(B,C)100−20 | 40,500 | 11.3 | 14.0 | 41,000 | 3.68 | 8.4 | 25,400 | 2.56 |
| 3034151 | 25HCB342A30 | CSPH*4812A** | 58MV(B,C)120−20 | 40,500 | 11.4 | 14.0 | 41,000 | 3.68 | 8.4 | 25,400 | 2.56 |
| 3034192 | 25HCB342A30 | CSPH*4812A** | 58PH*070−16 | 41,000 | 11.0 | 13.5 | 42,000 | 3.64 | 8.2 | 26,000 | 2.52 |
| 3034193 | 25HCB342A30 | CSPH*4812A** | 58PH*090−16 | 41,000 | 11.5 | 14.0 | 41,500 | 3.72 | 8.4 | 25,400 | 2.58 |
| 3034194 | 25HCB342A30 | CSPH*4812A** | 58PH*110−20 | 41,500 | 11.5 | 14.0 | 41,500 | 3.74 | 8.4 | 25,400 | 2.60 |
| 3034195 | 25HCB342A30 | CSPH*4812A** | 58PH*135−20 | 41,000 | 11.5 | 14.0 | 41,500 | 3.72 | 8.4 | 25,400 | 2.58 |
| 3685176 | 25HCB342A30 | CSPH*4812A** | 58VLR120−20 | 41,000 | 11.5 | 14.0 | 41,500 | 3.66 | 8.3 | 25,400 | 2.58 |
| 3685175 | 25HCB342A30 | CSPH*4812A** | 58VMR120−20 | 41,000 | 11.5 | 14.0 | 41,500 | 3.64 | 8.2 | 25,400 | 2.56 |
| 4808058 | 25HCB342A30 | CSPH*4812A** | 59*N*A060V17**14 | 40,500 | 11.4 | 13.7 | 41,500 | 3.56 | 8.2 | 25,600 | 2.50 |
| 4808059 | 25HCB342A30 | CSPH*4812A** | 59*N*A080V17**14 | 40,500 | 11.5 | 14.0 | 41,500 | 3.58 | 8.2 | 25,600 | 2.52 |
| 4808060 | 25HCB342A30 | CSPH*4812A** | 59*N*A100V21**20 | 41,000 | 11.7 | 14.2 | 41,500 | 3.62 | 8.2 | 25,400 | 2.54 |
| 4808061 | 25HCB342A30 | CSPH*4812A** | 59*N*A120V24**22 | 41,000 | 11.9 | 14.5 | 41,500 | 3.64 | 8.2 | 25,200 | 2.56 |
| 4808062 | 25HCB342A30 | CSPH*4812A** | 59*P5A060E17**14 | 41,000 | 11.4 | 13.7 | 42,000 | 3.64 | 8.2 | 25,800 | 2.52 |
| 4808063 | 25HCB342A30 | CSPH*4812A** | 59*P5A080E17**16 | 41,000 | 11.5 | 14.0 | 42,000 | 3.68 | 8.2 | 25,800 | 2.54 |
| 4808064 | 25HCB342A30 | CSPH*4812A** | 59*P5A100E21**16 | 41,000 | 11.6 | 14.2 | 41,500 | 3.64 | 8.2 | 25,600 | 2.54 |
| 4808065 | 25HCB342A30 | CSPH*4812A** | 59*P5A120E24**22 | 41,500 | 11.9 | 14.5 | 42,000 | 3.76 | 8.5 | 25,600 | 2.58 |
| 4209849 | 25HCB342A30 | CSPH*4812A** | OVLAAB048112 | 41,000 | 11.2 | 13.5 | 42,000 | 3.70 | 8.3 | 26,000 | 2.54 |
| 4209850 | 25HCB342A30 | CSPH*4812A** | OVLAAB060154 | 42,000 | 11.5 | 14.5 | 42,000 | 3.86 | 8.5 | 26,200 | 2.62 |
| 4209848 | 25HCB342A30 | CSPH*4812A** | OVMAAB042112 | 41,000 | 11.2 | 13.5 | 42,000 | 3.66 | 8.3 | 25,800 | 2.54 |
| 3034145 | 25HCB342A30 | CSPH*4812A**+TDR | | 41,000 | 10.7 | 13.0 | 41,000 | 3.68 | 8.4 | 26,400 | 2.52 |
| 3850724 | 25HCB342A30 | FB4CNF042 | | 41,000 | 11.0 | 13.0 | 41,000 | 3.68 | 8.0 | 25,800 | 2.56 |
| 3685210 | 25HCB342A30 | FB4CNF042+TXV | | 41,000 | 11.5 | 14.0 | 42,000 | 3.68 | 8.2 | 25,800 | 2.56 |
| 3850725 | 25HCB342A30 | FB4CNF048 | | 41,000 | 11.0 | 13.0 | 41,000 | 3.72 | 8.0 | 25,600 | 2.58 |
| 3685211 | 25HCB342A30 | FB4CNF048+TXV | | 41,500 | 11.5 | 14.0 | 42,000 | 3.70 | 8.3 | 25,800 | 2.58 |
| 3034161 | 25HCB342A30 | FE4AN(B,F)003+UI | | 40,000 | 11.5 | 14.0 | 41,000 | 3.42 | 7.9 | 25,600 | 2.40 |
| 3034162 | 25HCB342A30 | FE4AN(B,F)005+UI | | 42,000 | 12.1 | 14.5 | 40,500 | 3.64 | 8.3 | 25,800 | 2.50 |
| 3034163 | 25HCB342A30 | FE4ANB006+UI | | 42,500 | 12.4 | 15.0 | 39,500 | 3.68 | 8.4 | 25,800 | 2.56 |
| 3405762 | 25HCB342A30 | FV4CN(B,F)003 | | 40,000 | 11.5 | 14.0 | 41,000 | 3.42 | 7.9 | 25,600 | 2.40 |
| 3405763 | 25HCB342A30 | FV4CN(B,F)005 | | 42,000 | 12.1 | 14.5 | 40,500 | 3.64 | 8.3 | 25,800 | 2.50 |
| 3405764 | 25HCB342A30 | FV4CNB006 | | 42,500 | 12.4 | 15.0 | 39,500 | 3.68 | 8.4 | 25,800 | 2.56 |
| 3685207 | 25HCB342A30 | FX4DN(B,F)043 | | 41,500 | 11.5 | 14.0 | 42,000 | 3.70 | 8.2 | 25,800 | 2.56 |
| 3685208 | 25HCB342A30 | FX4DN(B,F)049 | | 42,000 | 12.0 | 14.5 | 41,000 | 3.78 | 8.5 | 25,800 | 2.64 |
| 3685212 | 25HCB342A30 | FY5BNF042+TXV | | 41,000 | 11.2 | 13.5 | 42,000 | 3.64 | 8.1 | 26,000 | 2.54 |
| 3850726 | 25HCB342A30 | FY5BNF048 | | 41,000 | 11.0 | 13.0 | 41,000 | 3.74 | 8.0 | 26,200 | 2.56 |
| 3685213 | 25HCB342A30 | FY5BNF048+TXV | | 42,000 | 11.2 | 13.5 | 41,500 | 3.66 | 8.2 | 26,200 | 2.56 |
| | | | | | | | | | | | |
| 3843011 | 25HCB348A30 | †FY5BNF048 | | 46,500 | 11.0 | 13.0 | 48,500 | 3.72 | 8.0 | 30,200 | 2.66 |
| 3034474 | 25HCB348A30 | CAP**4817A** | 58CV(A,X)090−16 | 45,000 | 11.5 | 14.0 | 47,500 | 3.70 | 8.4 | 29,800 | 2.62 |
| 3121506 | 25HCB348A30 | CAP**4817A** | 58ME(B,C)080−16 | 46,000 | 11.5 | 14.0 | 48,000 | 3.70 | 8.5 | 30,000 | 2.62 |
| 3034473 | 25HCB348A30 | CAP**4817A**+TDR | | 45,000 | 10.8 | 13.0 | 48,000 | 3.66 | 8.4 | 30,200 | 2.60 |
| 3034478 | 25HCB348A30 | CAP**4821A** | 58CV(A,X)110−20 | 45,500 | 11.5 | 14.0 | 48,000 | 3.68 | 8.4 | 29,600 | 2.62 |
| 3121507 | 25HCB348A30 | CAP**4821A** | 58ME(B,C)100−20 | 46,000 | 12.0 | 14.5 | 48,000 | 3.70 | 8.5 | 29,600 | 2.64 |
| 3034476 | 25HCB348A30 | CAP**4821A** | 58MV(B,C)080−20 | 45,500 | 11.5 | 14.0 | 48,500 | 3.62 | 8.3 | 29,800 | 2.58 |
| 3034477 | 25HCB348A30 | CAP**4821A** | 58MV(B,C)100−20 | 45,500 | 11.5 | 14.0 | 48,000 | 3.64 | 8.3 | 29,600 | 2.60 |
| 3034451 | 25HCB348A30 | CAP**4821A** | 58PH*090−16 | 45,500 | 12.0 | 14.0 | 48,000 | 3.68 | 8.4 | 29,800 | 2.62 |
| 3034452 | 25HCB348A30 | CAP**4821A** | 58PH*110−20 | 45,500 | 12.0 | 14.5 | 48,000 | 3.70 | 8.4 | 29,400 | 2.64 |
| 3757497 | 25HCB348A30 | CAP**4821A** | 58UVB080−20 | 45,500 | 11.5 | 14.0 | 48,500 | 3.62 | 8.3 | 29,800 | 2.58 |

See notes on pg. 35

# COMBINATION RATINGS CONTINUED

| AHRI Ref. No. | Model Number | Coil Model Number | Furnace Model Number | Cooling Capacity | EER | SEER | High Temp | | HSPF | Low Temp | |
|---|---|---|---|---|---|---|---|---|---|---|---|
| | | | | | | | E Capacity | E COP | | H Capacity | H COP |
| 3757498 | 25HCB348A30 | CAP**4821A** | 58UVB100−20 | 45,500 | 11.5 | 14.0 | 48,000 | 3.64 | 8.3 | 29,600 | 2.60 |
| 3685231 | 25HCB348A30 | CAP**4821A** | 58VLR120−20 | 45,000 | 11.5 | 14.0 | 48,000 | 3.64 | 8.5 | 29,600 | 2.62 |
| 3685230 | 25HCB348A30 | CAP**4821A** | 58VMR120−20 | 45,000 | 11.2 | 13.5 | 48,000 | 3.60 | 8.5 | 29,800 | 2.60 |
| 4808066 | 25HCB348A30 | CAP**4821A** | 59*N*A100V21**20 | 45,000 | 12.5 | 15.0 | 47,500 | 3.58 | 8.2 | 29,800 | 2.56 |
| 4808067 | 25HCB348A30 | CAP**4821A** | 59*P5A100E21**16 | 45,000 | 12.0 | 14.5 | 47,500 | 3.60 | 8.2 | 30,000 | 2.56 |
| 4209858 | 25HCB348A30 | CAP**4821A** | OVLAAB048112 | 45,000 | 11.5 | 14.0 | 47,000 | 3.60 | 8.0 | 30,600 | 2.56 |
| 3034475 | 25HCB348A30 | CAP**4821A**+TDR | | 46,000 | 10.8 | 13.0 | 49,000 | 3.68 | 8.4 | 30,400 | 2.60 |
| 3685246 | 25HCB348A30 | CAP**4823A** | 58HDV080−−20 | 45,500 | 11.5 | 13.5 | 48,000 | 3.64 | 8.4 | 30,000 | 2.60 |
| 4808078 | 25HCB348A30 | CAP**4823A** | 59*N*A100V21**20 | 45,000 | 12.5 | 15.0 | 47,500 | 3.58 | 8.2 | 29,800 | 2.56 |
| 4808079 | 25HCB348A30 | CAP**4823A** | 59*N*A120V24**22 | 45,000 | 12.5 | 15.2 | 47,000 | 3.60 | 8.2 | 29,600 | 2.58 |
| 4808080 | 25HCB348A30 | CAP**4823A** | 59*P5A100E21**16 | 45,000 | 12.0 | 14.5 | 47,500 | 3.60 | 8.2 | 30,000 | 2.56 |
| 4808081 | 25HCB348A30 | CAP**4823A** | 59*P5A120E24**22 | 45,500 | 12.5 | 15.2 | 47,500 | 3.66 | 8.5 | 29,800 | 2.62 |
| 3685249 | 25HCB348A30 | CAP**4823A**+TDR | | 46,000 | 10.8 | 13.0 | 49,000 | 3.66 | 8.4 | 30,400 | 2.60 |
| 3034481 | 25HCB348A30 | CAP**4824A** | 58CV(A,X)135−22 | 45,500 | 11.7 | 14.5 | 48,000 | 3.70 | 8.5 | 29,400 | 2.64 |
| 3034482 | 25HCB348A30 | CAP**4824A** | 58CV(A,X)155−22 | 46,000 | 11.5 | 14.5 | 48,000 | 3.74 | 8.5 | 29,400 | 2.66 |
| 3685217 | 25HCB348A30 | CAP**4824A** | 58HDV100−−20 | 45,500 | 11.2 | 13.5 | 48,000 | 3.66 | 8.4 | 29,800 | 2.62 |
| 3121508 | 25HCB348A30 | CAP**4824A** | 58ME(B,C)120−20 | 46,000 | 12.0 | 14.5 | 48,000 | 3.74 | 8.5 | 29,600 | 2.66 |
| 3034480 | 25HCB348A30 | CAP**4824A** | 58MV(B,C)120−20 | 45,500 | 11.5 | 14.0 | 48,000 | 3.64 | 8.3 | 29,600 | 2.60 |
| 3034453 | 25HCB348A30 | CAP**4824A** | 58PH*135−20 | 46,000 | 12.0 | 14.0 | 48,000 | 3.70 | 8.4 | 29,600 | 2.64 |
| 3757499 | 25HCB348A30 | CAP**4824A** | 58UVB120−20 | 45,500 | 11.5 | 14.0 | 48,000 | 3.64 | 8.3 | 29,600 | 2.60 |
| 4808068 | 25HCB348A30 | CAP**4824A** | 59*N*A100V21**20 | 45,000 | 12.5 | 15.2 | 47,500 | 3.60 | 8.2 | 29,800 | 2.58 |
| 4808069 | 25HCB348A30 | CAP**4824A** | 59*N*A120V24**22 | 45,000 | 12.7 | 15.5 | 47,000 | 3.60 | 8.2 | 29,600 | 2.60 |
| 4808070 | 25HCB348A30 | CAP**4824A** | 59*P5A100E21**16 | 45,000 | 12.5 | 15.0 | 47,500 | 3.62 | 8.2 | 30,000 | 2.58 |
| 4808071 | 25HCB348A30 | CAP**4824A** | 59*P5A120E24**22 | 45,500 | 12.5 | 15.2 | 47,500 | 3.70 | 8.5 | 29,800 | 2.62 |
| 3034479 | 25HCB348A30 | CAP**4824A**+TDR | | 46,000 | 10.8 | 13.0 | 49,000 | 3.68 | 8.4 | 30,400 | 2.60 |
| 3034486 | 25HCB348A30 | CAP**6021A** | 58CV(A,X)110−20 | 46,500 | 11.7 | 14.5 | 46,500 | 3.68 | 8.5 | 29,600 | 2.66 |
| 3121509 | 25HCB348A30 | CAP**6021A** | 58ME(B,C)100−20 | 47,000 | 12.0 | 14.5 | 46,500 | 3.70 | 8.5 | 29,600 | 2.68 |
| 3034484 | 25HCB348A30 | CAP**6021A** | 58MV(B,C)080−20 | 46,500 | 11.7 | 14.5 | 47,000 | 3.64 | 8.4 | 29,800 | 2.62 |
| 3034485 | 25HCB348A30 | CAP**6021A** | 58MV(B,C)100−20 | 46,500 | 11.7 | 14.5 | 47,000 | 3.66 | 8.4 | 29,600 | 2.64 |
| 3034454 | 25HCB348A30 | CAP**6021A** | 58PH*090−16 | 47,000 | 12.0 | 14.5 | 46,500 | 3.66 | 8.4 | 29,800 | 2.66 |
| 3034455 | 25HCB348A30 | CAP**6021A** | 58PH*110−20 | 47,000 | 12.5 | 14.5 | 47,000 | 3.72 | 8.5 | 29,600 | 2.70 |
| 3757500 | 25HCB348A30 | CAP**6021A** | 58UVB080−20 | 46,500 | 11.7 | 14.5 | 47,000 | 3.64 | 8.4 | 29,800 | 2.62 |
| 3757501 | 25HCB348A30 | CAP**6021A** | 58UVB100−20 | 46,500 | 11.7 | 14.5 | 47,000 | 3.66 | 8.4 | 29,600 | 2.64 |
| 3685233 | 25HCB348A30 | CAP**6021A** | 58VLR120−20 | 46,500 | 12.0 | 14.5 | 48,000 | 3.68 | 8.5 | 29,600 | 2.66 |
| 3685232 | 25HCB348A30 | CAP**6021A** | 58VMR120−20 | 46,500 | 11.5 | 14.0 | 48,000 | 3.66 | 8.5 | 29,800 | 2.64 |
| 4808072 | 25HCB348A30 | CAP**6021A** | 59*N*A100V21**20 | 46,000 | 12.7 | 15.5 | 46,500 | 3.62 | 8.5 | 30,000 | 2.60 |
| 4808073 | 25HCB348A30 | CAP**6021A** | 59*P5A100E21**16 | 46,500 | 12.5 | 15.2 | 47,000 | 3.64 | 8.5 | 30,200 | 2.60 |
| 4209859 | 25HCB348A30 | CAP**6021A** | OVLAAB048112 | 46,500 | 12.0 | 14.5 | 46,500 | 3.62 | 8.2 | 30,600 | 2.60 |
| 3034483 | 25HCB348A30 | CAP**6021A**+TDR | | 47,000 | 10.8 | 13.0 | 44,500 | 3.50 | 8.3 | 30,600 | 2.62 |
| 3034489 | 25HCB348A30 | CAP**6024A** | 58CV(A,X)135−22 | 47,000 | 11.7 | 14.5 | 47,000 | 3.70 | 8.5 | 29,600 | 2.68 |
| 3034490 | 25HCB348A30 | CAP**6024A** | 58CV(A,X)155−22 | 47,000 | 12.0 | 15.0 | 46,500 | 3.72 | 8.6 | 29,400 | 2.68 |
| 3685218 | 25HCB348A30 | CAP**6024A** | 58HDV100−−20 | 46,500 | 11.5 | 14.0 | 48,000 | 3.68 | 8.5 | 30,000 | 2.64 |
| 3121510 | 25HCB348A30 | CAP**6024A** | 58ME(B,C)120−20 | 47,000 | 12.0 | 14.5 | 47,000 | 3.72 | 8.5 | 29,600 | 2.70 |
| 3034488 | 25HCB348A30 | CAP**6024A** | 58MV(B,C)120−20 | 46,500 | 11.7 | 14.5 | 47,000 | 3.64 | 8.4 | 29,600 | 2.64 |
| 3034456 | 25HCB348A30 | CAP**6024A** | 58PH*135−20 | 47,000 | 12.0 | 14.5 | 47,000 | 3.68 | 8.5 | 29,800 | 2.66 |
| 3757502 | 25HCB348A30 | CAP**6024A** | 58UVB120−20 | 46,500 | 11.7 | 14.5 | 47,000 | 3.64 | 8.4 | 29,600 | 2.64 |
| 4808074 | 25HCB348A30 | CAP**6024A** | 59*N*A100V21**20 | 46,000 | 12.7 | 15.5 | 46,500 | 3.64 | 8.5 | 30,000 | 2.62 |
| 4808075 | 25HCB348A30 | CAP**6024A** | 59*N*A120V24**22 | 46,000 | 12.7 | 15.5 | 46,500 | 3.66 | 8.5 | 29,600 | 2.64 |
| 4808076 | 25HCB348A30 | CAP**6024A** | 59*P5A100E21**16 | 46,500 | 12.5 | 15.2 | 47,000 | 3.64 | 8.5 | 30,200 | 2.62 |
| 4808077 | 25HCB348A30 | CAP**6024A** | 59*P5A120E24**22 | 47,000 | 12.7 | 15.5 | 46,500 | 3.72 | 8.5 | 30,000 | 2.66 |
| 3034487 | 25HCB348A30 | CAP**6024A**+TDR | | 47,000 | 10.8 | 13.0 | 45,000 | 3.52 | 8.3 | 30,400 | 2.66 |
| 3685247 | 25HCB348A30 | CAP**6025A** | 58HDV080−−20 | 47,000 | 12.0 | 14.0 | 47,500 | 3.66 | 8.5 | 30,200 | 2.64 |
| 3685219 | 25HCB348A30 | CAP**6025A** | 58HDV100−−20 | 46,500 | 11.5 | 14.0 | 48,000 | 3.68 | 8.5 | 30,000 | 2.64 |
| 4808082 | 25HCB348A30 | CAP**6025A** | 59*N*A100V21**20 | 46,000 | 12.7 | 15.5 | 46,500 | 3.64 | 8.5 | 30,000 | 2.62 |
| 4808083 | 25HCB348A30 | CAP**6025A** | 59*N*A120V24**22 | 46,000 | 12.7 | 15.5 | 46,500 | 3.66 | 8.5 | 29,600 | 2.64 |
| 4808084 | 25HCB348A30 | CAP**6025A** | 59*P5A100E21**16 | 46,500 | 12.5 | 15.2 | 47,000 | 3.64 | 8.5 | 30,200 | 2.62 |
| 4808085 | 25HCB348A30 | CAP**6025A** | 59*P5A120E24**22 | 47,000 | 12.7 | 15.5 | 46,500 | 3.72 | 8.5 | 30,000 | 2.66 |
| 3685250 | 25HCB348A30 | CAP**6025A**+TDR | | 47,000 | 10.8 | 13.0 | 45,000 | 3.60 | 8.3 | 30,600 | 2.62 |
| 3034507 | 25HCB348A30 | CNPH*4821A** | 58CV(A,X)090−16 | 45,500 | 11.5 | 14.0 | 48,000 | 3.62 | 8.3 | 29,600 | 2.60 |
| 3034508 | 25HCB348A30 | CNPH*4821A** | 58CV(A,X)110−20 | 45,500 | 11.5 | 14.0 | 48,000 | 3.64 | 8.4 | 29,600 | 2.62 |
| 3034509 | 25HCB348A30 | CNPH*4821A** | 58CV(A,X)135−22 | 46,000 | 11.7 | 14.5 | 48,000 | 3.68 | 8.4 | 29,400 | 2.64 |
| 3034510 | 25HCB348A30 | CNPH*4821A** | 58CV(A,X)155−22 | 46,000 | 11.7 | 14.5 | 48,000 | 3.70 | 8.5 | 29,400 | 2.66 |
| 3685222 | 25HCB348A30 | CNPH*4821A** | 58HDV080−−20 | 45,500 | 11.2 | 13.5 | 48,000 | 3.64 | 8.5 | 30,000 | 2.62 |
| 3685223 | 25HCB348A30 | CNPH*4821A** | 58HDV100−−20 | 45,500 | 11.5 | 14.0 | 48,000 | 3.62 | 8.4 | 29,800 | 2.62 |
| 3121514 | 25HCB348A30 | CNPH*4821A** | 58ME(B,C)080−16 | 46,000 | 11.5 | 14.0 | 48,000 | 3.66 | 8.4 | 30,000 | 2.60 |
| 3121515 | 25HCB348A30 | CNPH*4821A** | 58ME(B,C)100−20 | 46,000 | 12.0 | 14.5 | 48,000 | 3.68 | 8.4 | 29,600 | 2.64 |
| 3121516 | 25HCB348A30 | CNPH*4821A** | 58ME(B,C)120−20 | 46,000 | 12.0 | 14.5 | 48,000 | 3.72 | 8.4 | 29,600 | 2.66 |
| 3034504 | 25HCB348A30 | CNPH*4821A** | 58MV(B,C)080−20 | 45,500 | 11.5 | 14.0 | 48,500 | 3.60 | 8.3 | 29,600 | 2.60 |
| 3034505 | 25HCB348A30 | CNPH*4821A** | 58MV(B,C)100−20 | 45,500 | 11.5 | 14.0 | 48,000 | 3.62 | 8.3 | 29,600 | 2.60 |
| 3034506 | 25HCB348A30 | CNPH*4821A** | 58MV(B,C)120−20 | 45,500 | 11.5 | 14.0 | 48,000 | 3.62 | 8.3 | 29,600 | 2.60 |
| 3034461 | 25HCB348A30 | CNPH*4821A** | 58PH*090−16 | 46,000 | 12.0 | 14.5 | 48,500 | 3.68 | 8.4 | 29,600 | 2.62 |
| 3034462 | 25HCB348A30 | CNPH*4821A** | 58PH*110−20 | 46,000 | 12.0 | 14.5 | 48,000 | 3.68 | 8.4 | 29,400 | 2.64 |
| 3034463 | 25HCB348A30 | CNPH*4821A** | 58PH*135−20 | 46,000 | 12.0 | 14.5 | 48,500 | 3.68 | 8.4 | 29,600 | 2.64 |
| 3685237 | 25HCB348A30 | CNPH*4821A** | 58VLR120−20 | 45,500 | 11.5 | 14.0 | 48,000 | 3.60 | 8.5 | 29,400 | 2.62 |
| 3685236 | 25HCB348A30 | CNPH*4821A** | 58VMR120−20 | 45,500 | 11.5 | 14.0 | 48,000 | 3.58 | 8.5 | 29,600 | 2.60 |
| 4808101 | 25HCB348A30 | CNPH*4821A** | 59*N*A100V21**20 | 45,000 | 12.5 | 15.2 | 47,500 | 3.54 | 8.2 | 29,800 | 2.58 |
| 4808102 | 25HCB348A30 | CNPH*4821A** | 59*N*A120V24**22 | 45,000 | 12.7 | 15.5 | 47,000 | 3.56 | 8.2 | 29,600 | 2.60 |
| 4808103 | 25HCB348A30 | CNPH*4821A** | 59*P5A080E17**16 | 45,000 | 12.0 | 14.5 | 48,000 | 3.54 | 8.2 | 30,200 | 2.56 |
| 4808104 | 25HCB348A30 | CNPH*4821A** | 59*P5A100E21**16 | 45,500 | 12.5 | 15.0 | 48,000 | 3.58 | 8.2 | 30,000 | 2.58 |

See notes on pg. 35

# COMBINATION RATINGS CONTINUED

| AHRI Ref. No. | Model Number | Coil Model Number | Furnace Model Number | Cooling Capacity | EER | SEER | High Temp | | HSPF | Low Temp | |
|---|---|---|---|---|---|---|---|---|---|---|---|
| | | | | | | | E Capacity | E COP | | H Capacity | H COP |
| 4808105 | 25HCB348A30 | CNPH*4821A** | 59*P5A120E24**22 | 45,500 | 12.7 | 15.5 | 47,500 | 3.66 | 8.5 | 29,800 | 2.62 |
| 4209861 | 25HCB348A30 | CNPH*4821A** | OVLAAB048112 | 45,500 | 12.0 | 14.0 | 47,500 | 3.60 | 8.0 | 30,400 | 2.56 |
| 4209862 | 25HCB348A30 | CNPH*4821A** | OVLAAB060154 | 46,500 | 12.0 | 14.5 | 47,500 | 3.76 | 8.2 | 30,600 | 2.64 |
| 3034503 | 25HCB348A30 | CNPH*4821A**+TDR | | 46,000 | 10.8 | 13.0 | 49,000 | 3.68 | 8.4 | 30,400 | 2.60 |
| 3034515 | 25HCB348A30 | CNPH*6024A** | 58CV(A,X)090−16 | 46,500 | 11.7 | 14.5 | 47,000 | 3.68 | 8.4 | 29,600 | 2.64 |
| 3034516 | 25HCB348A30 | CNPH*6024A** | 58CV(A,X)110−20 | 46,500 | 11.7 | 14.5 | 47,000 | 3.70 | 8.5 | 29,600 | 2.66 |
| 3034517 | 25HCB348A30 | CNPH*6024A** | 58CV(A,X)135−22 | 46,500 | 12.0 | 15.0 | 47,000 | 3.74 | 8.5 | 29,400 | 2.68 |
| 3034518 | 25HCB348A30 | CNPH*6024A** | 58CV(A,X)155−22 | 47,000 | 12.0 | 15.0 | 46,500 | 3.76 | 8.6 | 29,400 | 2.68 |
| 3685224 | 25HCB348A30 | CNPH*6024A** | 58HDV080−−20 | 46,500 | 11.5 | 14.0 | 48,000 | 3.70 | 8.5 | 30,200 | 2.64 |
| 3685225 | 25HCB348A30 | CNPH*6024A** | 58HDV100−−20 | 46,500 | 11.5 | 14.0 | 48,000 | 3.70 | 8.5 | 30,000 | 2.64 |
| 3121517 | 25HCB348A30 | CNPH*6024A** | 58ME(B,C)080−16 | 46,500 | 12.0 | 14.0 | 48,000 | 3.68 | 8.4 | 30,000 | 2.64 |
| 3121518 | 25HCB348A30 | CNPH*6024A** | 58ME(B,C)100−20 | 47,000 | 12.0 | 14.5 | 48,000 | 3.74 | 8.5 | 29,600 | 2.68 |
| 3121519 | 25HCB348A30 | CNPH*6024A** | 58ME(B,C)120−20 | 47,000 | 12.0 | 15.0 | 48,000 | 3.76 | 8.5 | 29,600 | 2.70 |
| 3034512 | 25HCB348A30 | CNPH*6024A** | 58MV(B,C)080−20 | 46,500 | 11.5 | 14.0 | 47,000 | 3.66 | 8.4 | 29,800 | 2.62 |
| 3034513 | 25HCB348A30 | CNPH*6024A** | 58MV(B,C)100−20 | 46,500 | 11.7 | 14.5 | 47,000 | 3.68 | 8.4 | 29,600 | 2.64 |
| 3034514 | 25HCB348A30 | CNPH*6024A** | 58MV(B,C)120−20 | 46,500 | 11.7 | 14.5 | 47,000 | 3.68 | 8.4 | 29,600 | 2.64 |
| 3034464 | 25HCB348A30 | CNPH*6024A** | 58PH*090−16 | 47,000 | 12.0 | 14.5 | 48,000 | 3.72 | 8.5 | 29,800 | 2.66 |
| 3034465 | 25HCB348A30 | CNPH*6024A** | 58PH*110−20 | 47,000 | 12.0 | 14.5 | 48,000 | 3.74 | 8.5 | 29,600 | 2.68 |
| 3034466 | 25HCB348A30 | CNPH*6024A** | 58PH*135−20 | 47,000 | 12.0 | 14.5 | 48,000 | 3.74 | 8.5 | 29,600 | 2.66 |
| 3685239 | 25HCB348A30 | CNPH*6024A** | 58VLR120−20 | 46,500 | 12.0 | 14.5 | 48,000 | 3.70 | 8.5 | 29,600 | 2.66 |
| 3685238 | 25HCB348A30 | CNPH*6024A** | 58VMR120−20 | 46,000 | 12.0 | 14.5 | 48,000 | 3.68 | 8.5 | 29,600 | 2.64 |
| 4808106 | 25HCB348A30 | CNPH*6024A** | 59*N*A100V21**20 | 46,000 | 12.7 | 15.5 | 47,500 | 3.66 | 8.5 | 29,800 | 2.62 |
| 4808107 | 25HCB348A30 | CNPH*6024A** | 59*N*A120V24**22 | 46,000 | 12.7 | 15.5 | 47,000 | 3.68 | 8.5 | 29,600 | 2.64 |
| 4808108 | 25HCB348A30 | CNPH*6024A** | 59*P5A080E17**16 | 46,000 | 12.5 | 15.0 | 48,000 | 3.64 | 8.5 | 30,200 | 2.58 |
| 4808109 | 25HCB348A30 | CNPH*6024A** | 59*P5A100E21**16 | 46,500 | 12.5 | 15.2 | 47,500 | 3.68 | 8.5 | 30,200 | 2.62 |
| 4808110 | 25HCB348A30 | CNPH*6024A** | 59*P5A120E24**22 | 46,500 | 12.7 | 15.5 | 47,500 | 3.74 | 8.5 | 30,000 | 2.66 |
| 4209863 | 25HCB348A30 | CNPH*6024A** | OVLAAB048112 | 46,500 | 12.0 | 14.5 | 47,500 | 3.66 | 8.2 | 30,400 | 2.60 |
| 4209864 | 25HCB348A30 | CNPH*6024A** | OVLAAB060154 | 47,000 | 12.5 | 15.0 | 47,000 | 3.76 | 8.5 | 30,600 | 2.66 |
| 3034511 | 25HCB348A30 | CNPH*6024A**+TDR | | 47,000 | 10.8 | 13.0 | 45,000 | 3.66 | 8.5 | 30,600 | 2.62 |
| 3685241 | 25HCB348A30 | CNPH*6124A** | 58VLR120−20 | 46,500 | 12.0 | 14.5 | 47,500 | 3.72 | 8.5 | 29,600 | 2.68 |
| 3685240 | 25HCB348A30 | CNPH*6124A** | 58VMR120−20 | 46,500 | 11.5 | 14.0 | 47,500 | 3.68 | 8.5 | 29,800 | 2.66 |
| 4808111 | 25HCB348A30 | CNPH*6124A** | 59*N*A100V21**20 | 46,500 | 12.7 | 15.5 | 46,500 | 3.66 | 8.5 | 30,000 | 2.62 |
| 4808112 | 25HCB348A30 | CNPH*6124A** | 59*N*A120V24**22 | 46,500 | 12.7 | 15.5 | 46,500 | 3.70 | 8.5 | 29,800 | 2.64 |
| 4808113 | 25HCB348A30 | CNPH*6124A** | 59*P5A100E21**16 | 46,500 | 12.5 | 15.2 | 46,500 | 3.68 | 8.5 | 30,200 | 2.62 |
| 4808114 | 25HCB348A30 | CNPH*6124A** | 59*P5A120E24**22 | 47,000 | 12.7 | 15.5 | 46,000 | 3.72 | 8.5 | 30,000 | 2.66 |
| 3567689 | 25HCB348A30 | CNPV*4821A** | 58CV(A,X)090−16 | 45,500 | 11.5 | 14.0 | 48,000 | 3.60 | 8.5 | 29,600 | 2.62 |
| 3034494 | 25HCB348A30 | CNPV*4821A** | 58CV(A,X)110−20 | 45,500 | 11.5 | 14.0 | 48,000 | 3.64 | 8.4 | 29,600 | 2.62 |
| 4209869 | 25HCB348A30 | CNPV*4821A** | 58HDV080−−20 | 46,000 | 12.0 | 14.5 | 47,500 | 3.68 | 8.2 | 30,200 | 2.60 |
| 3121511 | 25HCB348A30 | CNPV*4821A** | 58ME(B,C)100−20 | 46,000 | 12.0 | 14.5 | 48,000 | 3.68 | 8.4 | 29,600 | 2.64 |
| 3034492 | 25HCB348A30 | CNPV*4821A** | 58MV(B,C)080−20 | 45,500 | 11.5 | 14.0 | 48,500 | 3.60 | 8.3 | 29,600 | 2.60 |
| 3034493 | 25HCB348A30 | CNPV*4821A** | 58MV(B,C)100−20 | 45,500 | 11.5 | 14.0 | 48,000 | 3.62 | 8.3 | 29,600 | 2.60 |
| 3034457 | 25HCB348A30 | CNPV*4821A** | 58PH*090−16 | 46,000 | 11.5 | 14.5 | 48,500 | 3.68 | 8.4 | 29,600 | 2.62 |
| 3034458 | 25HCB348A30 | CNPV*4821A** | 58PH*110−20 | 46,000 | 12.0 | 14.5 | 48,000 | 3.68 | 8.4 | 29,400 | 2.64 |
| 3758791 | 25HCB348A30 | CNPV*4821A** | 58UVB080−20 | 45,500 | 11.5 | 14.0 | 48,500 | 3.60 | 8.3 | 29,600 | 2.60 |
| 3758792 | 25HCB348A30 | CNPV*4821A** | 58UVB100−20 | 45,500 | 11.5 | 14.0 | 48,000 | 3.62 | 8.3 | 29,600 | 2.60 |
| 3685235 | 25HCB348A30 | CNPV*4821A** | 58VLR120−20 | 45,500 | 12.0 | 14.5 | 48,000 | 3.60 | 8.5 | 29,400 | 2.62 |
| 3685234 | 25HCB348A30 | CNPV*4821A** | 58VMR120−20 | 45,500 | 11.5 | 14.0 | 48,000 | 3.58 | 8.5 | 29,600 | 2.60 |
| 4808086 | 25HCB348A30 | CNPV*4821A** | 59*N*A100V21**20 | 45,000 | 12.5 | 15.2 | 47,500 | 3.54 | 8.2 | 29,800 | 2.58 |
| 4808087 | 25HCB348A30 | CNPV*4821A** | 59*P5A080E17**16 | 45,000 | 12.0 | 14.5 | 48,000 | 3.54 | 8.2 | 30,200 | 2.56 |
| 4808088 | 25HCB348A30 | CNPV*4821A** | 59*P5A100E21**16 | 45,500 | 12.5 | 15.0 | 48,000 | 3.58 | 8.2 | 30,000 | 2.58 |
| 4209860 | 25HCB348A30 | CNPV*4821A** | OVLAAB048112 | 45,500 | 12.0 | 14.0 | 47,500 | 3.60 | 8.0 | 30,400 | 2.56 |
| 3034491 | 25HCB348A30 | CNPV*4821A**+TDR | | 46,000 | 10.8 | 13.0 | 49,000 | 3.68 | 8.4 | 30,400 | 2.60 |
| 3034497 | 25HCB348A30 | CNPV*4824A** | 58CV(A,X)135−22 | 45,500 | 11.7 | 14.5 | 48,000 | 3.68 | 8.4 | 29,400 | 2.64 |
| 3034498 | 25HCB348A30 | CNPV*4824A** | 58CV(A,X)155−22 | 46,000 | 11.5 | 14.5 | 48,000 | 3.70 | 8.5 | 29,400 | 2.66 |
| 4209870 | 25HCB348A30 | CNPV*4824A** | 58HDV080−−20 | 46,000 | 12.0 | 14.5 | 47,500 | 3.68 | 8.2 | 30,200 | 2.60 |
| 4149678 | 25HCB348A30 | CNPV*4824A** | 58HDV100−−20 | 45,500 | 11.5 | 14.0 | 48,000 | 3.62 | 8.4 | 29,800 | 2.62 |
| 3685220 | 25HCB348A30 | CNPV*4824A** | 58HDV100−−20 (DNFLW ONLY) | 45,500 | 11.5 | 14.0 | 48,000 | 3.62 | 8.4 | 29,800 | 2.62 |
| 3121512 | 25HCB348A30 | CNPV*4824A** | 58ME(B,C)120−20 | 46,000 | 12.0 | 14.5 | 48,000 | 3.72 | 8.5 | 29,600 | 2.66 |
| 3034496 | 25HCB348A30 | CNPV*4824A** | 58MV(B,C)120−20 | 45,500 | 11.5 | 14.0 | 48,000 | 3.62 | 8.3 | 29,600 | 2.60 |
| 3034459 | 25HCB348A30 | CNPV*4824A** | 58PH*135−20 | 46,000 | 12.0 | 14.5 | 48,500 | 3.68 | 8.4 | 29,600 | 2.64 |
| 3758793 | 25HCB348A30 | CNPV*4824A** | 58UVB120−20 | 45,500 | 11.5 | 14.0 | 48,000 | 3.62 | 8.3 | 29,600 | 2.60 |
| 4808089 | 25HCB348A30 | CNPV*4824A** | 59*N*A100V21**20 | 45,000 | 12.5 | 15.2 | 47,500 | 3.54 | 8.2 | 29,800 | 2.58 |
| 4808090 | 25HCB348A30 | CNPV*4824A** | 59*N*A120V24**22 | 45,000 | 12.7 | 15.5 | 47,000 | 3.56 | 8.2 | 29,600 | 2.60 |
| 4808091 | 25HCB348A30 | CNPV*4824A** | 59*P5A100E21**16 | 45,500 | 12.5 | 15.0 | 48,000 | 3.58 | 8.2 | 30,000 | 2.58 |
| 4808092 | 25HCB348A30 | CNPV*4824A** | 59*P5A120E24**22 | 45,500 | 12.7 | 15.5 | 47,500 | 3.66 | 8.5 | 29,800 | 2.62 |
| 3034495 | 25HCB348A30 | CNPV*4824A**+TDR | | 46,000 | 10.8 | 13.0 | 49,000 | 3.68 | 8.4 | 30,400 | 2.60 |
| 3034501 | 25HCB348A30 | CNPV*6024A** | 58CV(A,X)135−22 | 46,500 | 12.0 | 15.0 | 47,000 | 3.74 | 8.5 | 29,400 | 2.68 |
| 3034502 | 25HCB348A30 | CNPV*6024A** | 58CV(A,X)155−22 | 47,000 | 12.0 | 15.0 | 46,500 | 3.76 | 8.6 | 29,400 | 2.68 |
| 4209871 | 25HCB348A30 | CNPV*6024A** | 58HDV080−−20 | 46,500 | 12.5 | 15.0 | 47,000 | 3.72 | 8.5 | 30,400 | 2.64 |
| 4149679 | 25HCB348A30 | CNPV*6024A** | 58HDV100−−20 | 46,500 | 11.5 | 14.0 | 48,000 | 3.70 | 8.5 | 30,000 | 2.64 |
| 3685221 | 25HCB348A30 | CNPV*6024A** | 58HDV100−−20 (DNFLW ONLY) | 46,500 | 11.5 | 14.0 | 48,000 | 3.70 | 8.5 | 30,000 | 2.64 |
| 3121513 | 25HCB348A30 | CNPV*6024A** | 58ME(B,C)120−20 | 47,000 | 12.0 | 15.0 | 48,000 | 3.76 | 8.5 | 29,600 | 2.70 |
| 3034500 | 25HCB348A30 | CNPV*6024A** | 58MV(B,C)120−20 | 46,500 | 11.7 | 14.5 | 47,000 | 3.68 | 8.4 | 29,600 | 2.64 |
| 3034460 | 25HCB348A30 | CNPV*6024A** | 58PH*135−20 | 47,000 | 12.0 | 14.5 | 48,000 | 3.74 | 8.5 | 29,600 | 2.66 |
| 3758794 | 25HCB348A30 | CNPV*6024A** | 58UVB120−20 | 46,500 | 11.7 | 14.5 | 47,000 | 3.68 | 8.4 | 29,600 | 2.64 |
| 4808093 | 25HCB348A30 | CNPV*6024A** | 59*N*A100V21**20 | 46,000 | 12.7 | 15.5 | 47,500 | 3.66 | 8.5 | 29,800 | 2.62 |
| 4808094 | 25HCB348A30 | CNPV*6024A** | 59*N*A120V24**22 | 46,000 | 12.7 | 15.5 | 47,000 | 3.68 | 8.5 | 29,600 | 2.64 |

See notes on pg. 35

# COMBINATION RATINGS CONTINUED

| AHRI Ref. No. | Model Number | Coil Model Number | Furnace Model Number | Cooling Capacity | EER | SEER | High Temp | | HSPF | Low Temp | |
|---|---|---|---|---|---|---|---|---|---|---|---|
| | | | | | | | E Capacity | E COP | | H Capacity | H COP |
| 4808095 | 25HCB348A30 | CNPV*6024A** | 59*P5A100E21**16 | 46,500 | 12.5 | 15.2 | 47,500 | 3.68 | 8.5 | 30,200 | 2.62 |
| 4808096 | 25HCB348A30 | CNPV*6024A** | 59*P5A120E24**22 | 46,500 | 12.7 | 15.5 | 47,500 | 3.74 | 8.5 | 30,000 | 2.66 |
| 4670180 | 25HCB348A30 | CNPV*6024A** | OVLAAB060154 | 47,500 | 12.5 | 15.0 | 47,500 | 3.76 | 8.5 | 30,600 | 2.66 |
| 3034499 | 25HCB348A30 | CNPV*6024A**+TDR | | 47,000 | 10.8 | 13.0 | 45,000 | 3.66 | 8.5 | 30,600 | 2.62 |
| 4209872 | 25HCB348A30 | CNPV*6124A** | 58HDV080−−20 | 47,000 | 12.5 | 15.0 | 46,500 | 3.78 | 8.5 | 30,400 | 2.68 |
| 4209873 | 25HCB348A30 | CNPV*6124A** | 58HDV100−−20 | 47,000 | 12.5 | 15.0 | 46,500 | 3.80 | 8.5 | 30,200 | 2.68 |
| 4808097 | 25HCB348A30 | CNPV*6124A** | 59*N*A100V21**20 | 46,500 | 12.7 | 15.5 | 47,000 | 3.74 | 8.5 | 30,000 | 2.66 |
| 4808098 | 25HCB348A30 | CNPV*6124A** | 59*N*A120V24**22 | 46,500 | 13.0 | 16.0 | 47,000 | 3.78 | 8.5 | 29,600 | 2.68 |
| 4808099 | 25HCB348A30 | CNPV*6124A** | 59*P5A100E21**16 | 47,000 | 12.7 | 15.5 | 47,000 | 3.76 | 8.5 | 30,200 | 2.66 |
| 4808100 | 25HCB348A30 | CNPV*6124A** | 59*P5A120E24**22 | 47,500 | 13.0 | 16.0 | 47,000 | 3.82 | 8.8 | 30,000 | 2.70 |
| 3034524 | 25HCB348A30 | CSPH*4812A** | 58CV(A,X)090−16 | 45,500 | 11.5 | 14.0 | 48,000 | 3.68 | 8.4 | 29,800 | 2.62 |
| 3034525 | 25HCB348A30 | CSPH*4812A** | 58CV(A,X)110−20 | 45,500 | 11.5 | 14.0 | 48,000 | 3.70 | 8.4 | 29,600 | 2.62 |
| 3034526 | 25HCB348A30 | CSPH*4812A** | 58CV(A,X)135−22 | 45,500 | 11.7 | 14.5 | 48,000 | 3.72 | 8.5 | 29,600 | 2.64 |
| 3034527 | 25HCB348A30 | CSPH*4812A** | 58CV(A,X)155−22 | 45,500 | 11.7 | 14.5 | 48,000 | 3.76 | 8.6 | 29,400 | 2.66 |
| 3685226 | 25HCB348A30 | CSPH*4812A** | 58HDV080−−20 | 46,000 | 11.2 | 13.5 | 48,000 | 3.68 | 8.5 | 30,200 | 2.62 |
| 3685227 | 25HCB348A30 | CSPH*4812A** | 58HDV100−−20 | 46,000 | 11.2 | 13.5 | 48,000 | 3.66 | 8.4 | 29,800 | 2.62 |
| 3121520 | 25HCB348A30 | CSPH*4812A** | 58ME(B,C)080−16 | 46,000 | 11.5 | 14.0 | 48,000 | 3.70 | 8.5 | 30,000 | 2.62 |
| 3121521 | 25HCB348A30 | CSPH*4812A** | 58ME(B,C)100−20 | 46,000 | 12.0 | 14.5 | 48,000 | 3.72 | 8.5 | 29,600 | 2.64 |
| 3121522 | 25HCB348A30 | CSPH*4812A** | 58ME(B,C)120−20 | 46,500 | 12.0 | 14.5 | 48,000 | 3.76 | 8.5 | 29,600 | 2.66 |
| 3034521 | 25HCB348A30 | CSPH*4812A** | 58MV(B,C)080−20 | 45,500 | 11.5 | 14.0 | 48,500 | 3.66 | 8.4 | 29,800 | 2.60 |
| 3034522 | 25HCB348A30 | CSPH*4812A** | 58MV(B,C)100−20 | 45,500 | 11.5 | 14.0 | 48,000 | 3.68 | 8.4 | 29,800 | 2.62 |
| 3034523 | 25HCB348A30 | CSPH*4812A** | 58MV(B,C)120−20 | 45,500 | 11.5 | 14.0 | 48,000 | 3.66 | 8.4 | 29,600 | 2.62 |
| 3034467 | 25HCB348A30 | CSPH*4812A** | 58PH*090−16 | 46,000 | 12.0 | 14.5 | 48,500 | 3.72 | 8.5 | 29,800 | 2.64 |
| 3034468 | 25HCB348A30 | CSPH*4812A** | 58PH*110−20 | 46,000 | 12.0 | 14.5 | 48,000 | 3.70 | 8.5 | 29,400 | 2.64 |
| 3034469 | 25HCB348A30 | CSPH*4812A** | 58PH*135−20 | 46,000 | 12.0 | 14.5 | 48,500 | 3.70 | 8.4 | 29,600 | 2.64 |
| 3685243 | 25HCB348A30 | CSPH*4812A** | 58VLR120−20 | 45,500 | 11.5 | 14.0 | 48,000 | 3.66 | 8.5 | 29,600 | 2.64 |
| 3685242 | 25HCB348A30 | CSPH*4812A** | 58VMR120−20 | 45,500 | 11.5 | 14.0 | 48,000 | 3.64 | 8.5 | 29,800 | 2.62 |
| 4808115 | 25HCB348A30 | CSPH*4812A** | 59*N*A100V21**20 | 45,500 | 12.5 | 15.2 | 47,500 | 3.60 | 8.2 | 30,000 | 2.58 |
| 4808116 | 25HCB348A30 | CSPH*4812A** | 59*N*A120V24**22 | 45,500 | 12.7 | 15.5 | 47,500 | 3.62 | 8.2 | 29,600 | 2.60 |
| 4808117 | 25HCB348A30 | CSPH*4812A** | 59*P5A100E21**16 | 45,500 | 12.5 | 15.0 | 48,000 | 3.62 | 8.2 | 30,000 | 2.58 |
| 4808118 | 25HCB348A30 | CSPH*4812A** | 59*P5A120E24**22 | 46,000 | 12.7 | 15.5 | 47,500 | 3.68 | 8.5 | 29,800 | 2.62 |
| 4209865 | 25HCB348A30 | CSPH*4812A** | OVLAAB048112 | 45,500 | 12.0 | 14.0 | 47,500 | 3.64 | 8.2 | 30,600 | 2.56 |
| 4209866 | 25HCB348A30 | CSPH*4812A** | OVLAAB060154 | 46,500 | 12.0 | 14.5 | 47,500 | 3.78 | 8.2 | 30,600 | 2.64 |
| 3034520 | 25HCB348A30 | CSPH*4812A**+TDR | | 46,000 | 10.8 | 13.0 | 49,000 | 3.72 | 8.5 | 30,600 | 2.62 |
| 3034532 | 25HCB348A30 | CSPH*6012A** | 58CV(A,X)090−16 | 46,500 | 11.7 | 14.5 | 47,000 | 3.74 | 8.5 | 29,600 | 2.66 |
| 3034533 | 25HCB348A30 | CSPH*6012A** | 58CV(A,X)110−20 | 46,500 | 11.7 | 14.5 | 46,500 | 3.76 | 8.6 | 29,600 | 2.68 |
| 3034534 | 25HCB348A30 | CSPH*6012A** | 58CV(A,X)135−22 | 46,500 | 12.0 | 15.0 | 46,500 | 3.78 | 8.6 | 29,600 | 2.70 |
| 3034535 | 25HCB348A30 | CSPH*6012A** | 58CV(A,X)155−22 | 46,500 | 12.0 | 15.0 | 46,500 | 3.80 | 8.7 | 29,400 | 2.70 |
| 3685228 | 25HCB348A30 | CSPH*6012A** | 58HDV080−−20 | 47,000 | 11.5 | 14.0 | 48,000 | 3.74 | 8.5 | 30,200 | 2.66 |
| 3685229 | 25HCB348A30 | CSPH*6012A** | 58HDV100−−20 | 47,000 | 11.5 | 14.0 | 48,000 | 3.76 | 8.5 | 30,000 | 2.66 |
| 3121523 | 25HCB348A30 | CSPH*6012A** | 58ME(B,C)080−16 | 47,000 | 12.0 | 14.5 | 48,000 | 3.74 | 8.5 | 30,000 | 2.66 |
| 3121524 | 25HCB348A30 | CSPH*6012A** | 58ME(B,C)100−20 | 47,000 | 12.0 | 14.5 | 48,000 | 3.80 | 8.5 | 29,800 | 2.70 |
| 3121525 | 25HCB348A30 | CSPH*6012A** | 58ME(B,C)120−20 | 47,500 | 12.5 | 15.0 | 48,000 | 3.82 | 8.5 | 29,600 | 2.72 |
| 3034529 | 25HCB348A30 | CSPH*6012A** | 58MV(B,C)080−20 | 46,500 | 11.7 | 14.5 | 47,000 | 3.70 | 8.5 | 29,800 | 2.64 |
| 3034530 | 25HCB348A30 | CSPH*6012A** | 58MV(B,C)100−20 | 46,500 | 11.7 | 14.5 | 47,000 | 3.72 | 8.5 | 29,800 | 2.66 |
| 3034531 | 25HCB348A30 | CSPH*6012A** | 58MV(B,C)120−20 | 46,500 | 11.7 | 14.5 | 47,000 | 3.72 | 8.5 | 29,600 | 2.66 |
| 3034470 | 25HCB348A30 | CSPH*6012A** | 58PH*090−16 | 47,000 | 12.0 | 14.5 | 48,000 | 3.76 | 8.5 | 29,800 | 2.68 |
| 3034471 | 25HCB348A30 | CSPH*6012A** | 58PH*110−20 | 47,000 | 12.0 | 14.5 | 48,000 | 3.80 | 8.5 | 29,600 | 2.70 |
| 3034472 | 25HCB348A30 | CSPH*6012A** | 58PH*135−20 | 47,000 | 12.0 | 14.5 | 48,000 | 3.78 | 8.5 | 29,800 | 2.70 |
| 3685245 | 25HCB348A30 | CSPH*6012A** | 58VLR120−20 | 46,500 | 12.0 | 14.5 | 48,000 | 3.74 | 8.5 | 29,600 | 2.68 |
| 3685244 | 25HCB348A30 | CSPH*6012A** | 58VMR120−20 | 46,500 | 12.0 | 14.5 | 48,000 | 3.72 | 8.5 | 29,800 | 2.66 |
| 4808119 | 25HCB348A30 | CSPH*6012A** | 59*N*A100V21**20 | 46,500 | 12.7 | 15.5 | 47,500 | 3.70 | 8.5 | 29,800 | 2.62 |
| 4808120 | 25HCB348A30 | CSPH*6012A** | 59*N*A120V24**22 | 46,500 | 13.0 | 16.0 | 47,000 | 3.72 | 8.5 | 29,600 | 2.64 |
| 4808121 | 25HCB348A30 | CSPH*6012A** | 59*P5A080E17**16 | 46,500 | 12.5 | 15.2 | 47,500 | 3.68 | 8.5 | 30,400 | 2.60 |
| 4808122 | 25HCB348A30 | CSPH*6012A** | 59*P5A100E21**16 | 46,500 | 12.7 | 15.2 | 47,500 | 3.72 | 8.5 | 30,200 | 2.62 |
| 4808123 | 25HCB348A30 | CSPH*6012A** | 59*P5A120E24**22 | 47,000 | 12.7 | 15.5 | 47,500 | 3.78 | 8.8 | 30,000 | 2.68 |
| 4209867 | 25HCB348A30 | CSPH*6012A** | OVLAAB048112 | 46,500 | 12.0 | 14.5 | 47,000 | 3.70 | 8.2 | 30,400 | 2.62 |
| 4209868 | 25HCB348A30 | CSPH*6012A** | OVLAAB060154 | 47,000 | 12.0 | 15.0 | 46,500 | 3.82 | 8.5 | 30,600 | 2.70 |
| 3034528 | 25HCB348A30 | CSPH*6012A**+TDR | | 47,000 | 10.8 | 13.0 | 45,000 | 3.68 | 8.5 | 30,600 | 2.64 |
| 3843012 | 25HCB348A30 | FB4CNF048 | | 46,000 | 11.0 | 13.0 | 48,500 | 3.62 | 8.0 | 30,000 | 2.60 |
| 3685251 | 25HCB348A30 | FB4CNF048+TXV | | 46,000 | 11.5 | 14.0 | 48,000 | 3.64 | 8.4 | 30,000 | 2.60 |
| 3843013 | 25HCB348A30 | FB4CNF060 | | 47,000 | 12.2 | 14.5 | 48,000 | 3.76 | 8.6 | 30,000 | 2.68 |
| 3034541 | 25HCB348A30 | FE4AN(B,F)005+UI | | 47,000 | 12.2 | 15.0 | 47,500 | 3.78 | 8.6 | 29,400 | 2.72 |
| 3034542 | 25HCB348A30 | FE4ANB006+UI | | 48,000 | 12.5 | 15.5 | 46,000 | 3.86 | 8.8 | 29,400 | 2.78 |
| 3405771 | 25HCB348A30 | FV4CN(B,F)005 | | 47,000 | 12.2 | 15.0 | 47,500 | 3.78 | 8.6 | 29,400 | 2.72 |
| 3405772 | 25HCB348A30 | FV4CNB006 | | 48,000 | 12.5 | 15.5 | 46,000 | 3.86 | 8.8 | 29,400 | 2.78 |
| 3685248 | 25HCB348A30 | FX4DN(B,F)049 | | 47,500 | 12.2 | 14.5 | 48,000 | 3.80 | 8.7 | 29,800 | 2.70 |
| 3869392 | 25HCB348A30 | FX4DN(B,F)061 | | 48,000 | 12.5 | 15.0 | 44,000 | 3.84 | 8.5 | 30,200 | 2.76 |
| 3685254 | 25HCB348A30 | FY5BNB060 | | 47,500 | 11.5 | 13.5 | 47,000 | 3.60 | 8.4 | 30,800 | 2.62 |
| 3685253 | 25HCB348A30 | FY5BNF048+TXV | | 47,000 | 12.0 | 14.0 | 48,000 | 3.72 | 8.6 | 30,200 | 2.66 |
| | | | | | | | | | | | |
| 3853240 | 25HCB360A31 | †FY5BNB060 | | 59,500 | 10.8 | 13.0 | 60,000 | 3.62 | 8.0 | 38,500 | 2.56 |
| 3286560 | 25HCB360A31 | CAP**6021A** | 58CV(A,X)110−20 | 58,000 | 11.2 | 13.5 | 56,500 | 3.48 | 7.8 | 36,000 | 2.52 |
| 3286574 | 25HCB360A31 | CAP**6021A** | 58ME(B,C)100−20 | 58,000 | 11.5 | 13.5 | 58,000 | 3.52 | 8.0 | 36,400 | 2.58 |
| 3286550 | 25HCB360A31 | CAP**6021A** | 58PH*090−16 | 58,500 | 11.5 | 13.5 | 58,000 | 3.50 | 8.0 | 36,600 | 2.58 |
| 3286551 | 25HCB360A31 | CAP**6021A** | 58PH*110−20 | 59,000 | 11.5 | 13.5 | 58,500 | 3.58 | 8.0 | 36,600 | 2.60 |
| 3286544 | 25HCB360A31 | CAP**6021A**+TDR | | 59,000 | 10.8 | 13.0 | 58,000 | 3.48 | 7.8 | 36,400 | 2.52 |
| 3286561 | 25HCB360A31 | CAP**6024A** | 58CV(A,X)135−22 | 59,000 | 11.5 | 13.5 | 57,500 | 3.50 | 7.8 | 35,800 | 2.54 |
| 3286562 | 25HCB360A31 | CAP**6024A** | 58CV(A,X)155−22 | 59,000 | 11.5 | 14.0 | 57,500 | 3.54 | 7.9 | 35,800 | 2.56 |

See notes on pg. 35

# COMBINATION RATINGS CONTINUED

| AHRI Ref. No. | Model Number | Coil Model Number | Furnace Model Number | Cooling Capacity | EER | SEER | High Temp | | HSPF | Low Temp | |
|---|---|---|---|---|---|---|---|---|---|---|---|
| | | | | | | | E Capacity | E COP | | H Capacity | H COP |
| 3286575 | 25HCB360A31 | CAP**6024A** | 58ME(B,C)120−20 | 58,000 | 11.5 | 13.5 | 58,000 | 3.54 | 8.0 | 36,400 | 2.60 |
| 3286552 | 25HCB360A31 | CAP**6024A** | 58PH*135−20 | 58,500 | 11.5 | 13.5 | 58,000 | 3.52 | 8.0 | 36,600 | 2.58 |
| 4808124 | 25HCB360A31 | CAP**6024A** | 59*N*A120V24**22 | 58,500 | 11.4 | 13.7 | 58,500 | 3.52 | 7.7 | 36,600 | 2.56 |
| 4808125 | 25HCB360A31 | CAP**6024A** | 59*P5A120E24**22 | 58,500 | 11.4 | 13.7 | 58,000 | 3.52 | 7.7 | 36,600 | 2.56 |
| 3286545 | 25HCB360A31 | CAP**6024A**+TDR | | 60,000 | 10.8 | 13.0 | 59,000 | 3.60 | 8.0 | 37,000 | 2.54 |
| 4157035 | 25HCB360A31 | CAP**6025A** | 58HDV100−−20 | 58,500 | 11.2 | 13.0 | 59,000 | 3.52 | 7.7 | 37,400 | 2.56 |
| 4808126 | 25HCB360A31 | CAP**6025A** | 59*N*A120V24**22 | 58,500 | 11.4 | 13.7 | 58,500 | 3.52 | 7.7 | 36,600 | 2.56 |
| 4808127 | 25HCB360A31 | CAP**6025A** | 59*P5A120E24**22 | 58,500 | 11.4 | 13.7 | 58,000 | 3.52 | 7.7 | 36,600 | 2.56 |
| 4157056 | 25HCB360A31 | CAP**6025A**+TDR | | 60,000 | 10.8 | 13.0 | 59,000 | 3.66 | 8.0 | 37,600 | 2.60 |
| 3286565 | 25HCB360A31 | CNPH*6024A** | 58CV(A,X)110−20 | 58,500 | 11.2 | 13.5 | 57,500 | 3.46 | 7.7 | 36,000 | 2.52 |
| 3286566 | 25HCB360A31 | CNPH*6024A** | 58CV(A,X)135−22 | 58,500 | 11.2 | 13.5 | 57,000 | 3.48 | 7.8 | 35,800 | 2.54 |
| 3286567 | 25HCB360A31 | CNPH*6024A** | 58CV(A,X)155−22 | 59,000 | 11.5 | 14.0 | 57,000 | 3.52 | 7.8 | 35,800 | 2.56 |
| 4157059 | 25HCB360A31 | CNPH*6024A** | 58HDV080−−20 | 58,500 | 11.0 | 13.0 | 59,500 | 3.50 | 7.7 | 37,600 | 2.54 |
| 4157060 | 25HCB360A31 | CNPH*6024A** | 58HDV100−−20 | 58,500 | 11.2 | 13.0 | 59,000 | 3.50 | 7.7 | 37,200 | 2.54 |
| 3286577 | 25HCB360A31 | CNPH*6024A** | 58ME(B,C)080−16 | 57,500 | 11.5 | 13.5 | 58,000 | 3.42 | 7.8 | 36,600 | 2.54 |
| 3286578 | 25HCB360A31 | CNPH*6024A** | 58ME(B,C)100−20 | 58,000 | 11.5 | 13.5 | 58,000 | 3.50 | 7.9 | 36,400 | 2.58 |
| 3286579 | 25HCB360A31 | CNPH*6024A** | 58ME(B,C)120−20 | 58,000 | 11.5 | 13.5 | 58,000 | 3.52 | 8.0 | 36,200 | 2.60 |
| 3286554 | 25HCB360A31 | CNPH*6024A** | 58PH*090−16 | 58,500 | 11.5 | 13.5 | 58,000 | 3.48 | 8.0 | 36,600 | 2.56 |
| 3286555 | 25HCB360A31 | CNPH*6024A** | 58PH*110−20 | 58,500 | 11.5 | 13.5 | 58,000 | 3.54 | 8.0 | 36,600 | 2.60 |
| 3286556 | 25HCB360A31 | CNPH*6024A** | 58PH*135−20 | 58,500 | 11.5 | 13.5 | 58,000 | 3.50 | 8.0 | 36,600 | 2.58 |
| 4157033 | 25HCB360A31 | CNPH*6024A** | 58VLR120−20 | 58,000 | 11.2 | 13.5 | 58,000 | 3.52 | 7.9 | 36,800 | 2.58 |
| 4808131 | 25HCB360A31 | CNPH*6024A** | 59*P5A120E24**22 | 58,500 | 11.4 | 13.7 | 58,000 | 3.50 | 7.7 | 36,400 | 2.56 |
| 3286547 | 25HCB360A31 | CNPH*6024A**+TDR | | 59,500 | 10.8 | 13.0 | 58,500 | 3.54 | 8.0 | 37,600 | 2.60 |
| 4157046 | 25HCB360A31 | CNPH*6124A** | 58CV(A,X)110−20 | 59,000 | 11.5 | 13.5 | 59,000 | 3.60 | 7.8 | 37,000 | 2.60 |
| 4157047 | 25HCB360A31 | CNPH*6124A** | 58CV(A,X)135−22 | 59,000 | 11.5 | 13.5 | 58,500 | 3.64 | 7.9 | 36,600 | 2.62 |
| 4157048 | 25HCB360A31 | CNPH*6124A** | 58CV(A,X)155−22 | 58,500 | 11.5 | 14.0 | 58,500 | 3.68 | 7.9 | 36,600 | 2.64 |
| 4157061 | 25HCB360A31 | CNPH*6124A** | 58HDV080−−20 | 59,000 | 11.0 | 13.0 | 60,000 | 3.60 | 7.8 | 37,800 | 2.56 |
| 4157062 | 25HCB360A31 | CNPH*6124A** | 58HDV100−−20 | 59,000 | 11.2 | 13.0 | 59,500 | 3.60 | 7.8 | 37,400 | 2.58 |
| 4157051 | 25HCB360A31 | CNPH*6124A** | 58ME(B,C)080−16 | 58,500 | 11.5 | 13.5 | 58,500 | 3.50 | 7.7 | 36,600 | 2.56 |
| 4157052 | 25HCB360A31 | CNPH*6124A** | 58ME(B,C)100−20 | 59,000 | 11.5 | 13.5 | 58,000 | 3.58 | 7.8 | 36,600 | 2.60 |
| 4157096 | 25HCB360A31 | CNPH*6124A** | 58ME(B,C)120−20 | 59,000 | 11.5 | 14.0 | 58,000 | 3.62 | 7.8 | 36,400 | 2.62 |
| 4157043 | 25HCB360A31 | CNPH*6124A** | 58MV(B,C)080−20 | 58,500 | 11.0 | 13.0 | 59,500 | 3.52 | 7.7 | 37,600 | 2.52 |
| 4157044 | 25HCB360A31 | CNPH*6124A** | 58MV(B,C)100−20 | 58,500 | 11.0 | 13.0 | 59,000 | 3.50 | 7.7 | 37,200 | 2.54 |
| 4157045 | 25HCB360A31 | CNPH*6124A** | 58MV(B,C)120−20 | 59,000 | 11.2 | 13.5 | 59,000 | 3.56 | 7.7 | 37,000 | 2.58 |
| 4157049 | 25HCB360A31 | CNPH*6124A** | 58PH*110−20 | 59,000 | 11.5 | 13.5 | 58,500 | 3.64 | 7.9 | 36,600 | 2.62 |
| 4157050 | 25HCB360A31 | CNPH*6124A** | 58PH*135−20 | 59,000 | 11.5 | 13.5 | 58,500 | 3.58 | 7.8 | 36,600 | 2.60 |
| 4808132 | 25HCB360A31 | CNPH*6124A** | 59*N*A120V24**22 | 59,000 | 11.4 | 13.7 | 58,500 | 3.58 | 7.7 | 36,800 | 2.58 |
| 4808133 | 25HCB360A31 | CNPH*6124A** | 59*P5A120E24**22 | 59,000 | 11.4 | 13.7 | 58,500 | 3.56 | 7.7 | 36,600 | 2.58 |
| 4157042 | 25HCB360A31 | CNPH*6124A**+TDR | | 59,000 | 11.5 | 13.5 | 59,000 | 3.62 | 7.9 | 37,200 | 2.60 |
| 3286563 | 25HCB360A31 | CNPV*6024A** | 58CV(A,X)135−22 | 58,500 | 11.2 | 13.5 | 57,000 | 3.48 | 7.8 | 35,800 | 2.54 |
| 3286564 | 25HCB360A31 | CNPV*6024A** | 58CV(A,X)155−22 | 59,000 | 11.5 | 14.0 | 57,000 | 3.52 | 7.8 | 35,800 | 2.56 |
| 4209874 | 25HCB360A31 | CNPV*6024A** | 58HDV080−−20 | 58,000 | 11.0 | 13.0 | 58,500 | 3.52 | 7.7 | 37,600 | 2.54 |
| 4157057 | 25HCB360A31 | CNPV*6024A** | 58HDV100−−20 | 58,500 | 11.2 | 13.0 | 59,000 | 3.50 | 7.7 | 37,200 | 2.54 |
| 3286576 | 25HCB360A31 | CNPV*6024A** | 58ME(B,C)120−20 | 58,000 | 11.5 | 13.5 | 58,000 | 3.52 | 8.0 | 36,200 | 2.60 |
| 3286553 | 25HCB360A31 | CNPV*6024A** | 58PH*135−20 | 58,500 | 11.5 | 13.5 | 58,000 | 3.50 | 8.0 | 36,600 | 2.58 |
| 4808128 | 25HCB360A31 | CNPV*6024A** | 59*P5A120E24**22 | 58,500 | 11.4 | 13.7 | 58,000 | 3.50 | 7.7 | 36,400 | 2.56 |
| 3286546 | 25HCB360A31 | CNPV*6024A**+TDR | | 59,500 | 10.8 | 13.0 | 58,500 | 3.54 | 7.9 | 36,800 | 2.54 |
| 4157038 | 25HCB360A31 | CNPV*6124A** | 58CV(A,X)135−22 | 59,500 | 12.0 | 14.0 | 58,500 | 3.66 | 7.9 | 36,600 | 2.64 |
| 4157039 | 25HCB360A31 | CNPV*6124A** | 58CV(A,X)155−22 | 59,500 | 12.0 | 14.0 | 58,500 | 3.68 | 8.0 | 36,600 | 2.66 |
| 4209875 | 25HCB360A31 | CNPV*6124A** | 58HDV080−−20 | 60,000 | 11.0 | 13.0 | 60,000 | 3.62 | 7.8 | 37,800 | 2.58 |
| 4157058 | 25HCB360A31 | CNPV*6124A** | 58HDV100−−20 | 59,500 | 11.2 | 13.0 | 59,500 | 3.60 | 7.8 | 37,400 | 2.60 |
| 4157041 | 25HCB360A31 | CNPV*6124A** | 58ME(B,C)120−20 | 59,500 | 12.0 | 14.0 | 58,500 | 3.66 | 7.9 | 36,400 | 2.66 |
| 4157037 | 25HCB360A31 | CNPV*6124A** | 58MV(B,C)120−20 | 59,500 | 11.5 | 13.5 | 59,000 | 3.60 | 7.8 | 37,000 | 2.60 |
| 4157040 | 25HCB360A31 | CNPV*6124A** | 58PH*135−20 | 59,500 | 11.5 | 14.0 | 58,500 | 3.64 | 7.9 | 36,600 | 2.64 |
| 4808129 | 25HCB360A31 | CNPV*6124A** | 59*N*A120V24**22 | 59,500 | 11.5 | 14.0 | 58,500 | 3.60 | 7.7 | 36,600 | 2.62 |
| 4808130 | 25HCB360A31 | CNPV*6124A** | 59*P5A120E24**22 | 59,500 | 11.5 | 14.0 | 58,500 | 3.62 | 7.7 | 36,800 | 2.62 |
| 4157036 | 25HCB360A31 | CNPV*6124A**+TDR | | 60,000 | 11.5 | 13.5 | 60,000 | 3.74 | 8.0 | 37,800 | 2.64 |
| 3286568 | 25HCB360A31 | CSPH*6012A** | 58CV(A,X)110−20 | 59,000 | 11.2 | 13.5 | 57,500 | 3.52 | 7.8 | 36,000 | 2.54 |
| 3286569 | 25HCB360A31 | CSPH*6012A** | 58CV(A,X)135−22 | 59,000 | 11.5 | 14.0 | 57,500 | 3.56 | 7.9 | 35,800 | 2.56 |
| 3286570 | 25HCB360A31 | CSPH*6012A** | 58CV(A,X)155−22 | 59,000 | 11.5 | 14.0 | 57,500 | 3.58 | 7.9 | 35,800 | 2.58 |
| 4157053 | 25HCB360A31 | CSPH*6012A** | 58HDV080−−20 | 58,500 | 11.0 | 13.0 | 59,000 | 3.56 | 7.7 | 37,800 | 2.56 |
| 4157054 | 25HCB360A31 | CSPH*6012A** | 58HDV100−−20 | 58,500 | 11.2 | 13.0 | 59,000 | 3.56 | 7.7 | 37,400 | 2.58 |
| 3286580 | 25HCB360A31 | CSPH*6012A** | 58ME(B,C)080−16 | 58,000 | 11.5 | 13.5 | 58,500 | 3.48 | 7.9 | 36,600 | 2.56 |
| 3286581 | 25HCB360A31 | CSPH*6012A** | 58ME(B,C)100−20 | 58,500 | 11.5 | 13.5 | 58,000 | 3.56 | 8.0 | 36,600 | 2.60 |
| 3286582 | 25HCB360A31 | CSPH*6012A** | 58ME(B,C)120−20 | 58,500 | 11.5 | 14.0 | 58,000 | 3.58 | 8.0 | 36,400 | 2.62 |
| 3286557 | 25HCB360A31 | CSPH*6012A** | 58PH*090−16 | 59,000 | 11.5 | 13.5 | 58,000 | 3.54 | 8.0 | 36,600 | 2.58 |
| 3286558 | 25HCB360A31 | CSPH*6012A** | 58PH*110−20 | 59,000 | 11.5 | 13.5 | 58,000 | 3.60 | 8.0 | 36,600 | 2.62 |
| 3286559 | 25HCB360A31 | CSPH*6012A** | 58PH*135−20 | 59,000 | 11.5 | 13.5 | 58,000 | 3.56 | 8.0 | 36,600 | 2.60 |
| 4157034 | 25HCB360A31 | CSPH*6012A** | 58VLR120−20 | 58,000 | 11.2 | 13.5 | 58,000 | 3.58 | 8.0 | 37,000 | 2.60 |
| 4808134 | 25HCB360A31 | CSPH*6012A** | 59*N*A120V24**22 | 59,000 | 11.4 | 13.7 | 58,500 | 3.56 | 7.7 | 36,600 | 2.60 |
| 4808135 | 25HCB360A31 | CSPH*6012A** | 59*P5A120E24**22 | 59,000 | 11.4 | 13.7 | 58,500 | 3.56 | 7.7 | 36,600 | 2.60 |
| 3286548 | 25HCB360A31 | CSPH*6012A**+TDR | | 60,000 | 10.8 | 13.0 | 59,000 | 3.62 | 8.0 | 37,000 | 2.56 |

See notes on pg. 35

# COMBINATION RATINGS CONTINUED

| AHRI Ref. No. | Model Number | Coil Model Number | Furnace Model Number | Cooling Capacity | EER | SEER | High Temp | | HSPF | Low Temp | |
|---|---|---|---|---|---|---|---|---|---|---|---|
| | | | | | | | E Capacity | E COP | | H Capacity | H COP |
| 3853235 | 25HCB360A31 | FB4CNF060 | | 57,000 | 11.0 | 13.0 | 57,000 | 3.56 | 8.0 | 36,800 | 2.58 |
| 3286572 | 25HCB360A31 | FE4ANB006+UI | | 60,000 | 11.5 | 14.0 | 58,500 | 3.74 | 8.2 | 36,200 | 2.68 |
| 3405777 | 25HCB360A31 | FV4CNB006 | | 60,000 | 11.5 | 14.0 | 58,500 | 3.74 | 8.2 | 36,200 | 2.68 |
| 4157055 | 25HCB360A31 | FX4DN(B,F)061 | | 60,000 | 12.0 | 14.0 | 59,500 | 3.82 | 8.2 | 37,200 | 2.70 |

† Ratings are net values reflecting the effects of circulating fan heat. Supplemental electric heat is not included. Ratings are based on:
**Cooling Standard:** 80°F (27°C) db 67°F (19°C) wb indoor entering air temperature and 95°F (35°C) db air entering outdoor unit.
**High−Temp Heating Standard:** 70°F (21°C) db indoor entering air temperature and 47°F (8°C) db 43°F (6°C) wb air entering outdoor unit.
**Low−Temp Heating Standard:** 70°F (21°C) db indoor entering air temperature and 17°F (−8°C) db 15°F (−9°C) wb air entering outdoor unit.

**SEER** — Seasonal Energy Efficiency Ratio
**COP** — Coefficient of Performance
**TDR** — Time−Delay Relay
**HSPF** — Heating Seasonal Performance Factor
**EER** — Energy Efficiency Ratio
**NOTE: Ratings contained in this document are subject to change at any time. Always refer to the AHRI directory (www.ahridirectory.org) for the most up−to−date ratings information.**

# DETAILED COOLING CAPACITIES# CONTINUED

| EVAPORATOR AIR | | CONDENSER ENTERING AIR TEMPERATURES °F (°C) | | | | | | | | | | | | | | | | | |
|---|---|---|---|---|---|---|---|---|---|---|---|---|---|---|---|---|---|---|---|
| | | 75 (23.9) | | | 85 (29.4) | | | 95 (35) | | | 105 (40.6) | | | 115 (46.1) | | | 125 (51.7) | | |
| CFM | EWB °F (°C) | Capacity MBtuh | | Total Sys. KW** | Capacity MBtuh | | Total Sys. KW** | Capacity MBtuh | | Total Sys. KW** | Capacity MBtuh | | Total Sys. KW** | Capacity MBtuh | | Total Sys. KW** | Capacity MBtuh | | Total Sys. KW** |
| | | Total | Sens‡ | | Total | Sens‡ | | Total | Sens‡ | | Total | Sens‡ | | Total | Sens‡ | | Total | Sens‡ | |
| 25HCB318A30 Outdoor Section With FY4ANF018 Indoor Section | | | | | | | | | | | | | | | | | | | |
| 525 | 72 (22.2) | 20.62 | 10.13 | 0.83 | 19.63 | 9.76 | 0.92 | 18.58 | 9.37 | 1.03 | 17.48 | 8.97 | 1.14 | 16.29 | 8.54 | 1.27 | 15.00 | 8.08 | 1.41 |
| | 67 (19.4) | 18.71 | 12.53 | 0.83 | 17.79 | 12.14 | 0.93 | 16.82 | 11.74 | 1.03 | 15.79 | 11.32 | 1.15 | 14.68 | 10.88 | 1.28 | 13.49 | 10.40 | 1.42 |
| | 63 (17.2)†† | 17.34 | 12.09 | 0.84 | 16.46 | 11.70 | 0.93 | 15.54 | 11.29 | 1.04 | 14.57 | 10.87 | 1.15 | 13.53 | 10.42 | 1.28 | 12.40 | 9.94 | 1.42 |
| | 62 (16.7) | 16.99 | 14.91 | 0.84 | 16.14 | 14.50 | 0.93 | 15.25 | 14.07 | 1.04 | 14.32 | 13.59 | 1.15 | 13.41 | 13.41 | 1.28 | 12.51 | 12.51 | 1.42 |
| | 57 (13.9) | 16.39 | 16.39 | 0.84 | 15.71 | 15.71 | 0.93 | 14.99 | 14.99 | 1.04 | 14.23 | 14.23 | 1.15 | 13.41 | 13.41 | 1.28 | 12.51 | 12.51 | 1.42 |
| 600 | 72 (22.2) | 21.01 | 10.59 | 0.84 | 19.98 | 10.22 | 0.94 | 18.89 | 9.82 | 1.04 | 17.74 | 9.41 | 1.16 | 16.51 | 8.98 | 1.29 | 15.18 | 8.52 | 1.43 |
| | 67 (19.4) | 19.07 | 13.30 | 0.85 | 18.11 | 12.91 | 0.94 | 17.10 | 12.50 | 1.05 | 16.03 | 12.07 | 1.17 | 14.89 | 11.62 | 1.29 | 13.66 | 11.13 | 1.43 |
| | 63 (17.2)†† | 17.68 | 12.81 | 0.85 | 16.77 | 12.42 | 0.95 | 15.81 | 12.01 | 1.05 | 14.80 | 11.57 | 1.17 | 13.73 | 11.11 | 1.30 | 12.57 | 10.62 | 1.44 |
| | 62 (16.7) | 17.36 | 15.94 | 0.85 | 16.48 | 15.50 | 0.95 | 15.58 | 15.58 | 1.05 | 14.76 | 14.76 | 1.17 | 13.89 | 13.89 | 1.30 | 12.94 | 12.94 | 1.44 |
| | 57 (13.9) | 17.05 | 17.05 | 0.86 | 16.33 | 16.33 | 0.95 | 15.57 | 15.57 | 1.05 | 14.77 | 14.77 | 1.17 | 13.89 | 13.89 | 1.30 | 12.94 | 12.94 | 1.44 |
| 675 | 72 (22.2) | 21.30 | 11.03 | 0.86 | 20.23 | 10.65 | 0.96 | 19.11 | 10.25 | 1.06 | 17.93 | 9.84 | 1.18 | 16.67 | 9.40 | 1.31 | 15.30 | 8.93 | 1.45 |
| | 67 (19.4) | 19.34 | 14.03 | 0.87 | 18.35 | 13.64 | 0.96 | 17.31 | 13.22 | 1.07 | 16.21 | 12.79 | 1.18 | 15.04 | 12.32 | 1.31 | 13.78 | 11.82 | 1.45 |
| | 63 (17.2)†† | 17.93 | 13.50 | 0.87 | 16.99 | 13.10 | 0.97 | 16.01 | 12.68 | 1.07 | 14.97 | 12.24 | 1.19 | 13.87 | 11.76 | 1.32 | 12.68 | 11.25 | 1.46 |
| | 62 (16.7) | 17.68 | 16.86 | 0.87 | 16.85 | 16.85 | 0.97 | 16.05 | 16.05 | 1.07 | 15.20 | 15.20 | 1.19 | 14.29 | 14.29 | 1.32 | 13.29 | 13.29 | 1.45 |
| | 57 (13.9) | 17.60 | 17.60 | 0.87 | 16.85 | 16.85 | 0.97 | 16.05 | 16.05 | 1.07 | 15.21 | 15.21 | 1.19 | 14.29 | 14.29 | 1.32 | 13.30 | 13.30 | 1.45 |

| COOLING INDOOR MODEL | CAPACITY | POWER | FURNACE MODEL |
|---|---|---|---|
| *FB4CNF018 | 1.00 | 1.00 | |
| FB4CNF018 | 1.01 | 0.97 | |
| FB4CNF024 | 1.01 | 0.96 | |
| FB4CNF024 | 1.00 | 1.00 | |
| FE4ANF002 | 1.02 | 0.93 | |
| FF1ENP018 | 0.99 | 1.04 | |
| FF1ENP019 | 1.01 | 0.96 | |
| FF1ENP024 | 1.00 | 1.02 | |
| FF1ENP025 | 1.02 | 0.94 | |
| FV4BNF002 | 1.02 | 0.93 | |
| FX4CNF018 | 1.01 | 0.95 | |
| FX4CNF024 | 1.02 | 0.94 | |
| FX4DNF019 | 1.03 | 0.93 | |
| FX4DNF025 | 1.03 | 0.93 | |
| FY4ANF018 | 0.99 | 1.04 | |
| FY4ANF024 | 0.99 | 1.04 | |
| FY5BNF018 | 1.01 | 1.01 | |
| FY5BNF018 | 1.00 | 1.00 | |
| FY5BNF024 | 1.01 | 0.99 | |
| FY5BNF024 | 1.00 | 1.00 | |
| CAP**1814A** | 0.99 | 1.04 | |
| CAP**2414A** | 1.01 | 1.02 | |
| CAP**2417A** | 1.01 | 1.02 | |
| CAP**3619A** | 1.02 | 1.03 | |
| CNPF*2418A** | 1.01 | 1.02 | |
| CNPH*2417A** | 1.01 | 1.02 | |
| CNPV*1814A** | 1.00 | 1.05 | |
| CNPV*1917A** | 1.01 | 1.02 | |
| CNPV*2414A** | 1.01 | 1.02 | |
| CNPV*2417A** | 1.01 | 1.02 | |
| CSPH*2412A** | 1.02 | 1.04 | |
| CAP**1814A** | 0.99 | 0.95 | 58CV(A,X)070–12 |
| CAP**2414A** | 1.00 | 0.94 | 58CV(A,X)070–12 |
| CNPH*2417A** | 1.00 | 0.94 | 58CV(A,X)070–12 |
| CNPV*1814A** | 0.99 | 0.93 | 58CV(A,X)070–12 |
| CNPV*2414A** | 1.00 | 0.94 | 58CV(A,X)070–12 |
| CSPH*2412A** | 1.01 | 0.92 | 58CV(A,X)070–12 |
| CAP**2417A** | 1.01 | 0.92 | 58CV(A,X)090–16 |
| CNPH*2417A** | 1.00 | 0.92 | 58CV(A,X)090–16 |

| COOLING INDOOR MODEL | CAPACITY | POWER | FURNACE MODEL |
|---|---|---|---|
| CNPV*1917A** | 1.01 | 0.93 | 58CV(A,X)090–16 |
| CNPV*2417A** | 1.00 | 0.92 | 58CV(A,X)090–16 |
| CSPH*2412A** | 1.01 | 0.93 | 58CV(A,X)090–16 |
| CNPH*2417A** | 1.02 | 0.98 | 58HDV040––12 |
| CNPV*1917A** | 1.04 | 0.95 | 58HDV040––12 |
| CNPV*2417A** | 1.04 | 0.98 | 58HDV040––12 |
| CSPH*2412A** | 1.03 | 0.99 | 58HDV040––12 |
| CNPH*2417A** | 1.02 | 0.98 | 58HDV060––12 |
| CNPV*1917A** | 1.04 | 0.95 | 58HDV060––12 |
| CNPV*2417A** | 1.04 | 0.98 | 58HDV060––12 |
| CSPH*2412A** | 1.03 | 0.99 | 58HDV060––12 |
| CAP**2417A** | 1.03 | 0.94 | 58ME(B,C)060–12 |
| CNPH*2417A** | 1.01 | 0.93 | 58ME(B,C)060–12 |
| CNPV*1917A** | 1.03 | 0.95 | 58ME(B,C)060–12 |
| CNPV*2417A** | 1.01 | 0.93 | 58ME(B,C)060–12 |
| CSPH*2412A** | 1.01 | 0.93 | 58ME(B,C)060–12 |
| CAP**2417A** | 1.03 | 0.95 | 58MEB040–12 |
| CNPH*2417A** | 1.03 | 0.94 | 58MEB040–12 |
| CNPV*1917A** | 1.05 | 0.92 | 58MEB040–12 |
| CNPV*2417A** | 1.03 | 0.94 | 58MEB040–12 |
| CSPH*2412A** | 1.03 | 0.94 | 58MEB040–12 |
| CNPH*2417A** | 1.00 | 0.94 | 58MV(B,C)040–14 |
| CSPH*2412A** | 1.01 | 0.93 | 58MV(B,C)040–14 |
| CAP**2417A** | 1.00 | 0.92 | 58MV(B,C)060–14 |
| CNPH*2417A** | 1.00 | 0.94 | 58MV(B,C)060–14 |
| CNPV*1917A** | 1.01 | 0.93 | 58MV(B,C)060–14 |
| CNPV*2417A** | 1.01 | 0.95 | 58MV(B,C)060–14 |
| CSPH*2412A** | 1.01 | 0.93 | 58MV(B,C)060–14 |
| CNPH*2417A** | 1.00 | 0.94 | 58MV(B,C)080–14 |
| CSPH*2412A** | 1.01 | 0.93 | 58MV(B,C)080–14 |
| CAP**1814A** | 0.99 | 0.95 | 58PH*045–08 |
| CAP**2414A** | 1.02 | 0.93 | 58PH*045–08 |
| CNPH*2417A** | 1.01 | 0.93 | 58PH*045–08 |
| CNPV*1814A** | 1.00 | 0.96 | 58PH*045–08 |
| CNPV*2414A** | 1.01 | 0.93 | 58PH*045–08 |
| CSPH*2412A** | 1.02 | 0.94 | 58PH*045–08 |
| CAP**2417A** | 1.02 | 0.94 | 58VLR105–12 |
| CNPH*2417A** | 1.02 | 0.94 | 58VLR105–12 |
| CNPV*2417A** | 1.02 | 0.94 | 58VLR105–12 |

| COOLING INDOOR MODEL | CAPACITY | POWER | FURNACE MODEL |
|---|---|---|---|
| CSPH*2412A** | 1.02 | 0.94 | 58VLR105–12 |
| CAP**2417A** | 1.01 | 0.92 | 58VMR105–12 |
| CNPH*2417A** | 1.00 | 0.96 | 58VMR105–12 |
| CNPV*2417A** | 1.01 | 0.96 | 58VMR105–12 |
| CSPH*2412A** | 1.01 | 0.93 | 58VMR105–12 |
| CAP**2417A** | 1.02 | 0.94 | OVLAAB036098 |
| CNPH*2417A** | 1.02 | 0.94 | OVLAAB036098 |
| CNPV*1917A** | 1.03 | 0.94 | OVLAAB036098 |
| CNPV*2417A** | 1.02 | 0.94 | OVLAAB036098 |
| CSPH*2412A** | 1.03 | 0.94 | OVLAAB036098 |
| CAP**2417A** | 1.03 | 0.94 | OVMAAB036098 |
| CNPH*2417A** | 1.03 | 0.94 | OVMAAB036098 |
| CNPV*1917A** | 1.04 | 0.95 | OVMAAB036098 |
| CNPV*2417A** | 1.03 | 0.94 | OVMAAB036098 |
| CSPH*2412A** | 1.04 | 0.95 | OVMAAB036098 |
| CAP**2417A** | 1.01 | 0.96 | 59*N*A060V17**14 |
| CNPH*2417A** | 1.01 | 0.96 | 59*N*A060V17**14 |
| CNPV*1917A** | 1.01 | 0.96 | 59*N*A060V17**14 |
| CNPV*2417A** | 1.01 | 0.96 | 59*N*A060V17**14 |
| CSPH*2412A** | 1.01 | 0.97 | 59*N*A060V17**14 |
| CAP**2417A** | 1.00 | 0.95 | 59*N*A080V17**14 |
| CNPH*2417A** | 1.00 | 0.95 | 59*N*A080V17**14 |
| CNPV*1917A** | 1.01 | 0.95 | 59*N*A080V17**14 |
| CNPV*2417A** | 1.00 | 0.95 | 59*N*A080V17**14 |
| CSPH*2412A** | 1.01 | 0.96 | 59*N*A080V17**14 |
| CAP**1814A** | 0.98 | 0.98 | 59*P5A040E14**10 |
| CAP**2414A** | 1.00 | 0.97 | 59*P5A040E14**10 |
| CAP**2417A** | 1.00 | 0.97 | 59*P5A040E14**10 |
| CNPH*2417A** | 0.99 | 0.97 | 59*P5A040E14**10 |
| CNPV*1814A** | 0.98 | 0.97 | 59*P5A040E14**10 |
| CNPV*1917A** | 1.01 | 0.98 | 59*P5A040E14**10 |
| CNPV*2414A** | 0.99 | 0.97 | 59*P5A040E14**10 |
| CNPV*2417A** | 0.99 | 0.97 | 59*P5A040E14**10 |
| CSPH*2412A** | 1.00 | 0.97 | 59*P5A040E14**10 |

See note on pg. 50

# DETAILED COOLING CAPACITIES# CONTINUED

| EVAPORATOR AIR | | CONDENSER ENTERING AIR TEMPERATURES °F (°C) | | | | | | | | | | | | | | | | | |
|---|---|---|---|---|---|---|---|---|---|---|---|---|---|---|---|---|---|---|---|
| | | 75 (23.9) | | | 85 (29.4) | | | 95 (35) | | | 105 (40.6) | | | 115 (46.1) | | | 125 (51.7) | | |
| CFM | EWB °F (°C) | Capacity MBtuh | | Total Sys. KW** | Capacity MBtuh | | Total Sys. KW** | Capacity MBtuh | | Total Sys. KW** | Capacity MBtuh | | Total Sys. KW** | Capacity MBtuh | | Total Sys. KW** | Capacity MBtuh | | Total Sys. KW** |
| | | Total | Sens‡ | | Total | Sens‡ | | Total | Sens‡ | | Total | Sens‡ | | Total | Sens‡ | | Total | Sens‡ | |
| 25HCB324A30 Outdoor Section With FY4ANF024 Indoor Section | | | | | | | | | | | | | | | | | | | |
| 700 | 72 (22.2) | 26.97 | 13.80 | 1.66 | 25.72 | 13.32 | 1.86 | 24.41 | 12.81 | 2.09 | 23.03 | 12.29 | 2.34 | 21.54 | 11.73 | 2.61 | 19.91 | 11.13 | 2.91 |
| | 67 (19.4) | 24.65 | 17.15 | 1.66 | 23.49 | 16.65 | 1.86 | 22.26 | 16.12 | 2.09 | 20.97 | 15.57 | 2.34 | 19.59 | 15.00 | 2.62 | 18.09 | 14.38 | 2.92 |
| | 63 (17.2)†† | 22.94 | 16.60 | 1.66 | 21.84 | 16.09 | 1.86 | 20.68 | 15.56 | 2.09 | 19.46 | 15.01 | 2.34 | 18.16 | 14.43 | 2.62 | 16.76 | 13.81 | 2.92 |
| | 62 (16.7) | 22.50 | 20.46 | 1.66 | 21.42 | 19.93 | 1.86 | 20.30 | 19.36 | 2.09 | 19.14 | 18.75 | 2.34 | 17.96 | 17.96 | 2.62 | 16.82 | 16.82 | 2.92 |
| | 57 (13.9) | 21.73 | 21.73 | 1.66 | 20.87 | 20.87 | 1.86 | 19.96 | 19.96 | 2.09 | 19.00 | 19.00 | 2.34 | 17.96 | 17.96 | 2.62 | 16.82 | 16.82 | 2.92 |
| 800 | 72 (22.2) | 27.42 | 14.42 | 1.69 | 26.13 | 13.93 | 1.90 | 24.76 | 13.42 | 2.12 | 24.27 | 13.23 | 2.06 | 21.80 | 12.33 | 2.65 | 20.12 | 11.72 | 2.94 |
| | 67 (19.4) | 25.09 | 18.20 | 1.69 | 23.88 | 17.68 | 1.90 | 22.60 | 17.15 | 2.12 | 21.27 | 16.60 | 2.37 | 19.84 | 16.01 | 2.65 | 18.29 | 15.38 | 2.95 |
| | 63 (17.2)†† | 23.37 | 17.58 | 1.69 | 22.22 | 17.07 | 1.90 | 21.02 | 16.52 | 2.13 | 19.76 | 15.96 | 2.38 | 18.41 | 15.37 | 2.65 | 16.96 | 14.73 | 2.95 |
| | 62 (16.7) | 22.96 | 21.88 | 1.69 | 21.86 | 21.30 | 1.90 | 20.72 | 20.69 | 2.13 | 19.67 | 19.67 | 2.38 | 18.57 | 18.57 | 2.65 | 17.37 | 17.37 | 2.95 |
| | 57 (13.9) | 22.57 | 22.57 | 1.69 | 21.66 | 21.66 | 1.90 | 20.70 | 20.70 | 2.13 | 19.67 | 19.67 | 2.38 | 18.57 | 18.57 | 2.65 | 17.37 | 17.37 | 2.95 |
| 900 | 72 (22.2) | 27.75 | 15.01 | 1.73 | 26.42 | 14.51 | 1.93 | 26.10 | 14.39 | 1.86 | 24.55 | 13.82 | 2.09 | 22.87 | 13.22 | 2.36 | 20.25 | 12.28 | 2.98 |
| | 67 (19.4) | 25.40 | 19.19 | 1.73 | 24.16 | 18.68 | 1.93 | 22.85 | 18.13 | 2.16 | 21.48 | 17.57 | 2.41 | 20.02 | 16.97 | 2.69 | 18.43 | 16.31 | 2.98 |
| | 63 (17.2)†† | 23.68 | 18.52 | 1.73 | 22.50 | 17.99 | 1.93 | 21.26 | 17.44 | 2.16 | 19.97 | 16.87 | 2.41 | 18.59 | 16.26 | 2.69 | 17.11 | 15.60 | 2.99 |
| | 62 (16.7) | 23.36 | 23.12 | 1.73 | 22.32 | 22.31 | 1.93 | 21.30 | 21.30 | 2.16 | 20.23 | 20.23 | 2.41 | 19.07 | 19.07 | 2.69 | 17.81 | 17.81 | 2.99 |
| | 57 (13.9) | 23.27 | 23.27 | 1.73 | 22.31 | 22.31 | 1.93 | 21.30 | 21.30 | 2.16 | 20.23 | 20.23 | 2.41 | 19.07 | 19.07 | 2.69 | 17.81 | 17.81 | 2.99 |

| COOLING INDOOR MODEL | CAPACITY | POWER | FURNACE MODEL |
|---|---|---|---|
| *FY5BNF024 | 1.00 | 1.00 | |
| FB4CNF024 | 0.98 | 0.97 | |
| FB4CNF024 | 0.97 | 0.97 | |
| FB4CNF030 | 1.02 | 0.97 | |
| FB4CNF030 | 1.00 | 1.00 | |
| FE4AN(B,F)003 | 1.02 | 0.93 | |
| FE4ANF002 | 1.01 | 0.95 | |
| FF1ENP024 | 0.99 | 1.02 | |
| FF1ENP025 | 0.98 | 0.94 | |
| FF1ENP030 | 0.99 | 1.05 | |
| FF1ENP031 | 0.99 | 0.95 | |
| FV4BN(B,F)003 | 1.02 | 0.93 | |
| FV4BNF002 | 1.01 | 0.95 | |
| FX4CNF024 | 1.00 | 0.96 | |
| FX4CNF030 | 1.02 | 0.96 | |
| FX4DN(B,F)031 | 1.02 | 0.97 | |
| FX4DNF025 | 1.02 | 0.97 | |
| FY4ANF024 | 0.98 | 1.03 | |
| FY4ANF030 | 1.00 | 1.04 | |
| FY5BNF024 | 1.01 | 0.99 | |
| FY5BNF030 | 1.02 | 1.00 | |
| FY5BNF030 | 1.00 | 1.00 | |
| CAP**2414A** | 0.99 | 1.04 | |
| CAP**2417A** | 0.99 | 1.04 | |
| CAP**3014A** | 1.00 | 1.04 | |
| CAP**3017A** | 1.00 | 1.04 | |
| CAP**3619A** | 1.01 | 1.02 | |
| CNPF*2418A** | 0.99 | 1.04 | |
| CNPH*2417A** | 0.99 | 1.04 | |
| CNPH*3017A** | 1.00 | 1.04 | |
| CNPV*2414A** | 0.99 | 1.04 | |
| CNPV*2417A** | 0.99 | 1.04 | |
| CNPV*3014A** | 1.00 | 1.04 | |
| CNPV*3017A** | 1.00 | 1.04 | |
| CSPH*2412A** | 0.99 | 1.03 | |
| CSPH*3012A** | 1.00 | 1.04 | |

| COOLING INDOOR MODEL | CAPACITY | POWER | FURNACE MODEL |
|---|---|---|---|
| CAP**2414A** | 0.98 | 0.94 | 58CV(A,X)070–12 |
| CAP**3014A** | 1.00 | 0.94 | 58CV(A,X)070–12 |
| CNPH*2417A** | 0.98 | 0.94 | 58CV(A,X)070–12 |
| CNPH*3017A** | 1.00 | 0.94 | 58CV(A,X)070–12 |
| CNPV*2414A** | 0.98 | 0.94 | 58CV(A,X)070–12 |
| CNPV*3014A** | 1.00 | 0.94 | 58CV(A,X)070–12 |
| CSPH*2412A** | 0.99 | 0.94 | 58CV(A,X)070–12 |
| CSPH*3012A** | 1.00 | 0.94 | 58CV(A,X)070–12 |
| CAP**2417A** | 0.99 | 0.93 | 58CV(A,X)090–16 |
| CAP**3017A** | 1.00 | 0.94 | 58CV(A,X)090–16 |
| CNPH*2417A** | 0.99 | 0.94 | 58CV(A,X)090–16 |
| CNPH*3017A** | 1.00 | 0.94 | 58CV(A,X)090–16 |
| CNPV*2417A** | 0.99 | 0.95 | 58CV(A,X)090–16 |
| CNPV*3017A** | 1.00 | 0.94 | 58CV(A,X)090–16 |
| CSPH*2412A** | 0.99 | 0.93 | 58CV(A,X)090–16 |
| CSPH*3012A** | 1.00 | 0.94 | 58CV(A,X)090–16 |
| CNPH*2417A** | 0.99 | 0.95 | 58CV(A,X)110–20 |
| CNPH*3017A** | 1.00 | 0.94 | 58CV(A,X)110–20 |
| CSPH*2412A** | 0.99 | 0.95 | 58CV(A,X)110–20 |
| CSPH*3012A** | 1.00 | 0.94 | 58CV(A,X)110–20 |
| CNPH*2417A** | 0.99 | 0.95 | 58CV(A,X)135–22 |
| CNPH*3017A** | 1.01 | 0.95 | 58CV(A,X)135–22 |
| CSPH*2412A** | 0.99 | 0.93 | 58CV(A,X)135–22 |
| CSPH*3012A** | 1.00 | 0.94 | 58CV(A,X)135–22 |
| CNPH*2417A** | 0.99 | 0.95 | 58CV(A,X)155–22 |
| CNPH*3017A** | 1.01 | 0.95 | 58CV(A,X)155–22 |
| CSPH*2412A** | 0.99 | 0.93 | 58CV(A,X)155–22 |
| CSPH*3012A** | 1.00 | 0.94 | 58CV(A,X)155–22 |
| CAP**3619A** | 1.02 | 0.97 | 58HDV040––12 |
| CNPH*2417A** | 0.97 | 0.96 | 58HDV040––12 |
| CNPH*3017A** | 1.01 | 0.96 | 58HDV040––12 |
| CNPV*2417A** | 0.97 | 0.93 | 58HDV040––12 |
| CNPV*3017A** | 0.99 | 0.95 | 58HDV040––12 |
| CSPH*2412A** | 1.00 | 0.98 | 58HDV040––12 |
| CSPH*3012A** | 1.01 | 0.96 | 58HDV040––12 |
| CAP**3619A** | 1.03 | 0.98 | 58HDV060––12 |

| COOLING INDOOR MODEL | CAPACITY | POWER | FURNACE MODEL |
|---|---|---|---|
| CNPH*2417A** | 0.99 | 0.97 | 58HDV060––12 |
| CNPH*3017A** | 1.02 | 0.97 | 58HDV060––12 |
| CNPV*2417A** | 0.98 | 0.94 | 58HDV060––12 |
| CNPV*3017A** | 1.01 | 0.96 | 58HDV060––12 |
| CSPH*2412A** | 1.00 | 0.98 | 58HDV060––12 |
| CSPH*3012A** | 1.02 | 0.97 | 58HDV060––12 |
| CNPH*2417A** | 1.01 | 0.99 | 58HDV080––20 |
| CNPH*3017A** | 1.00 | 0.96 | 58HDV080––20 |
| CSPH*2412A** | 1.02 | 0.97 | 58HDV080––20 |
| CSPH*3012A** | 1.03 | 0.99 | 58HDV080––20 |
| CNPH*2417A** | 1.00 | 0.96 | 58HDV100––20 |
| CNPH*3017A** | 1.03 | 0.94 | 58HDV100––20 |
| CSPH*2412A** | 1.01 | 0.96 | 58HDV100––20 |
| CSPH*3012A** | 1.03 | 0.98 | 58HDV100––20 |
| CAP**2417A** | 1.00 | 0.92 | 58ME(B,C)060–12 |
| CAP**3017A** | 1.02 | 0.93 | 58ME(B,C)060–12 |
| CNPH*2417A** | 0.99 | 0.95 | 58ME(B,C)060–12 |
| CNPH*3017A** | 1.02 | 0.93 | 58ME(B,C)060–12 |
| CNPV*2417A** | 0.99 | 0.95 | 58ME(B,C)060–12 |
| CNPV*3017A** | 1.02 | 0.93 | 58ME(B,C)060–12 |
| CSPH*2412A** | 1.01 | 0.96 | 58ME(B,C)060–12 |
| CSPH*3012A** | 1.02 | 0.93 | 58ME(B,C)060–12 |
| CAP**2417A** | 1.00 | 0.92 | 58ME(B,C)080–12 |
| CAP**3017A** | 1.01 | 0.92 | 58ME(B,C)080–12 |
| CNPH*2417A** | 0.99 | 0.95 | 58ME(B,C)080–12 |
| CNPH*3017A** | 1.01 | 0.92 | 58ME(B,C)080–12 |
| CNPV*2417A** | 0.99 | 0.95 | 58ME(B,C)080–12 |
| CNPV*3017A** | 1.01 | 0.92 | 58ME(B,C)080–12 |
| CSPH*2412A** | 1.00 | 0.96 | 58ME(B,C)080–12 |
| CSPH*3012A** | 1.01 | 0.92 | 58ME(B,C)080–12 |
| CAP**2417A** | 1.00 | 0.92 | 58MEB040–12 |
| CAP**3017A** | 1.02 | 0.93 | 58MEB040–12 |
| CNPH*2417A** | 0.99 | 0.95 | 58MEB040–12 |
| CNPH*3017A** | 1.02 | 0.93 | 58MEB040–12 |
| CNPV*2417A** | 0.99 | 0.95 | 58MEB040–12 |
| CNPV*3017A** | 1.02 | 0.93 | 58MEB040–12 |

# DETAILED COOLING CAPACITIES# CONTINUED

**25HCB324A30 Outdoor Section With FY4ANF024 Indoor Section**

| COOLING INDOOR MODEL | CAPACITY | POWER | FURNACE MODEL |
|---|---|---|---|
| CSPH*2412A** | 1.00 | 0.92 | 58MEB040–12 |
| CSPH*3012A** | 1.02 | 0.93 | 58MEB040–12 |
| CNPH*2417A** | 0.99 | 0.95 | 58MV(B,C)040–14 |
| CNPH*3017A** | 1.00 | 0.94 | 58MV(B,C)040–14 |
| CSPH*2412A** | 0.99 | 0.95 | 58MV(B,C)040–14 |
| CSPH*3012A** | 1.00 | 0.94 | 58MV(B,C)040–14 |
| CAP**2417A** | 0.99 | 0.93 | 58MV(B,C)060–14 |
| CAP**3017A** | 1.00 | 0.94 | 58MV(B,C)060–14 |
| CNPH*2417A** | 0.99 | 0.95 | 58MV(B,C)060–14 |
| CNPH*3017A** | 1.00 | 0.94 | 58MV(B,C)060–14 |
| CNPV*2417A** | 0.99 | 0.95 | 58MV(B,C)060–14 |
| CNPV*3017A** | 1.00 | 0.94 | 58MV(B,C)060–14 |
| CSPH*2412A** | 0.99 | 0.93 | 58MV(B,C)060–14 |
| CSPH*3012A** | 1.00 | 0.94 | 58MV(B,C)060–14 |
| CNPH*2417A** | 0.99 | 0.95 | 58MV(B,C)080–14 |
| CNPH*3017A** | 1.00 | 0.94 | 58MV(B,C)080–14 |
| CSPH*2412A** | 0.99 | 0.95 | 58MV(B,C)080–14 |
| CSPH*3012A** | 1.00 | 0.94 | 58MV(B,C)080–14 |
| CNPH*2417A** | 0.99 | 0.95 | 58MV(B,C)080–20 |
| CNPH*3017A** | 1.00 | 0.94 | 58MV(B,C)080–20 |
| CSPH*2412A** | 0.99 | 0.94 | 58MV(B,C)080–20 |
| CSPH*3012A** | 1.00 | 0.94 | 58MV(B,C)080–20 |
| CNPH*2417A** | 0.99 | 0.95 | 58MV(B,C)100–20 |
| CNPH*3017A** | 1.01 | 0.95 | 58MV(B,C)100–20 |
| CSPH*2412A** | 0.99 | 0.93 | 58MV(B,C)100–20 |
| CSPH*3012A** | 1.00 | 0.94 | 58MV(B,C)100–20 |
| CNPH*2417A** | 0.98 | 0.94 | 58MV(B,C)120–20 |
| CNPH*3017A** | 1.00 | 0.94 | 58MV(B,C)120–20 |
| CSPH*2412A** | 0.99 | 0.95 | 58MV(B,C)120–20 |
| CSPH*3012A** | 1.00 | 0.94 | 58MV(B,C)120–20 |
| CAP**2414A** | 0.99 | 0.95 | 58PH*045–08 |
| CAP**3014A** | 1.01 | 0.96 | 58PH*045–08 |
| CNPH*2417A** | 0.99 | 0.95 | 58PH*045–08 |
| CNPH*3017A** | 1.01 | 0.96 | 58PH*045–08 |
| CNPV*2414A** | 0.99 | 0.95 | 58PH*045–08 |
| CNPV*3014A** | 1.01 | 0.96 | 58PH*045–08 |
| CSPH*2412A** | 1.00 | 0.96 | 58PH*045–08 |
| CSPH*3012A** | 1.00 | 0.92 | 58PH*045–08 |
| CAP**2417A** | 0.99 | 0.95 | 58VLR105–12 |
| CAP**3017A** | 1.01 | 0.92 | 58VLR105–12 |
| CNPH*2417A** | 0.99 | 0.95 | 58VLR105–12 |
| CNPH*3017A** | 1.01 | 0.92 | 58VLR105–12 |
| CNPV*2417A** | 0.99 | 0.95 | 58VLR105–12 |
| CNPV*3017A** | 1.01 | 0.92 | 58VLR105–12 |
| CSPH*2412A** | 1.01 | 0.96 | 58VLR105–12 |
| CSPH*3012A** | 1.01 | 0.92 | 58VLR105–12 |
| CAP**2417A** | 0.98 | 0.94 | 58VMR105–12 |
| CAP**3017A** | 0.99 | 0.91 | 58VMR105–12 |
| CNPH*2417A** | 0.98 | 0.94 | 58VMR105–12 |
| CNPH*3017A** | 0.99 | 0.91 | 58VMR105–12 |
| CNPV*2417A** | 0.98 | 0.94 | 58VMR105–12 |
| CNPV*3017A** | 0.99 | 0.91 | 58VMR105–12 |
| CSPH*2412A** | 0.99 | 0.95 | 58VMR105–12 |
| CSPH*3012A** | 1.00 | 0.96 | 58VMR105–12 |

| COOLING INDOOR MODEL | CAPACITY | POWER | FURNACE MODEL |
|---|---|---|---|
| CAP**2417A** | 0.98 | 0.94 | OVLAAB036098 |
| CAP**3017A** | 0.99 | 0.91 | OVLAAB036098 |
| CNPH*2417A** | 0.98 | 0.94 | OVLAAB036098 |
| CNPH*3017A** | 0.99 | 0.91 | OVLAAB036098 |
| CNPV*2417A** | 0.98 | 0.94 | OVLAAB036098 |
| CNPV*3017A** | 0.99 | 0.91 | OVLAAB036098 |
| CSPH*2412A** | 0.99 | 0.95 | OVLAAB036098 |
| CSPH*3012A** | 1.00 | 0.92 | OVLAAB036098 |
| CAP**2417A** | 0.98 | 0.94 | OVMAAB036098 |
| CAP**3017A** | 0.99 | 0.91 | OVMAAB036098 |
| CNPH*2417A** | 0.98 | 0.94 | OVMAAB036098 |
| CNPH*3017A** | 0.99 | 0.91 | OVMAAB036098 |
| CNPV*2417A** | 0.98 | 0.94 | OVMAAB036098 |
| CNPV*3017A** | 0.99 | 0.91 | OVMAAB036098 |
| CSPH*2412A** | 0.99 | 0.95 | OVMAAB036098 |
| CSPH*3012A** | 1.00 | 0.92 | OVMAAB036098 |
| CAP**2417A** | 0.97 | 0.89 | OVMAAB042112 |
| CAP**3017A** | 0.99 | 0.91 | OVMAAB042112 |
| CNPH*2417A** | 0.97 | 0.92 | OVMAAB042112 |
| CNPH*3017A** | 0.99 | 0.91 | OVMAAB042112 |
| CNPV*2417A** | 0.97 | 0.92 | OVMAAB042112 |
| CNPV*3017A** | 0.99 | 0.91 | OVMAAB042112 |
| CSPH*2412A** | 0.99 | 0.91 | OVMAAB042112 |
| CSPH*3012A** | 0.99 | 0.91 | OVMAAB042112 |
| CAP**2417A** | 0.98 | 0.92 | 59*N*A060V17**14 |
| CAP**3017A** | 0.99 | 0.92 | 59*N*A060V17**14 |
| CNPH*2417A** | 0.98 | 0.94 | 59*N*A060V17**14 |
| CNPH*3017A** | 0.99 | 0.91 | 59*N*A060V17**14 |
| CNPH*3117A** | 1.01 | 0.92 | 59*N*A060V17**14 |
| CNPV*2417A** | 0.98 | 0.94 | 59*N*A060V17**14 |
| CNPV*3017A** | 0.99 | 0.91 | 59*N*A060V17**14 |
| CNPV*3117A** | 1.01 | 0.92 | 59*N*A060V17**14 |
| CSPH*2412A** | 0.99 | 0.92 | 59*N*A060V17**14 |
| CSPH*3012A** | 1.00 | 0.93 | 59*N*A060V17**14 |
| CAP**2417A** | 0.97 | 0.91 | 59*N*A080V17**14 |
| CAP**3017A** | 0.99 | 0.91 | 59*N*A080V17**14 |
| CNPH*2417A** | 0.97 | 0.91 | 59*N*A080V17**14 |
| CNPH*3017A** | 0.99 | 0.91 | 59*N*A080V17**14 |
| CNPH*3117A** | 1.01 | 0.92 | 59*N*A080V17**14 |
| CNPV*2417A** | 0.97 | 0.91 | 59*N*A080V17**14 |
| CNPV*3017A** | 0.99 | 0.91 | 59*N*A080V17**14 |
| CNPV*3117A** | 1.01 | 0.92 | 59*N*A080V17**14 |
| CSPH*2412A** | 0.99 | 0.92 | 59*N*A080V17**14 |
| CSPH*3012A** | 0.99 | 0.91 | 59*N*A080V17**14 |
| CNPH*2417A** | 0.99 | 0.92 | 59*N*A100V21**20 |
| CNPH*3017A** | 1.00 | 0.92 | 59*N*A100V21**20 |
| CNPH*3117A** | 1.03 | 0.94 | 59*N*A100V21**20 |
| CSPH*2412A** | 1.00 | 0.93 | 59*N*A100V21**20 |
| CSPH*3012A** | 1.01 | 0.92 | 59*N*A100V21**20 |
| CNPH*2417A** | 0.98 | 0.92 | 59*N*A120V24**22 |
| CNPH*3017A** | 1.00 | 0.92 | 59*N*A120V24**22 |
| CNPH*3117A** | 1.02 | 0.90 | 59*N*A120V24**22 |
| CSPH*2412A** | 1.00 | 0.92 | 59*N*A120V24**22 |
| CSPH*3012A** | 1.00 | 0.92 | 59*N*A120V24**22 |

| COOLING INDOOR MODEL | CAPACITY | POWER | FURNACE MODEL |
|---|---|---|---|
| CAP**2414A** | 0.98 | 0.98 | 59*P5A040E14**10 |
| CAP**2417A** | 0.98 | 0.98 | 59*P5A040E14**10 |
| CAP**3014A** | 0.99 | 0.99 | 59*P5A040E14**10 |
| CAP**3017A** | 1.00 | 1.00 | 59*P5A040E14**10 |
| CNPH*2417A** | 0.98 | 0.98 | 59*P5A040E14**10 |
| CNPH*3017A** | 1.00 | 1.00 | 59*P5A040E14**10 |
| CNPH*3117A** | 1.03 | 0.99 | 59*P5A040E14**10 |
| CNPV*2414A** | 0.98 | 0.98 | 59*P5A040E14**10 |
| CNPV*2417A** | 0.98 | 0.98 | 59*P5A040E14**10 |
| CNPV*3014A** | 0.99 | 0.99 | 59*P5A040E14**10 |
| CNPV*3017A** | 1.00 | 1.00 | 59*P5A040E14**10 |
| CNPV*3117A** | 1.02 | 0.98 | 59*P5A040E14**10 |
| CSPH*2412A** | 0.99 | 0.99 | 59*P5A040E14**10 |
| CSPH*3012A** | 1.00 | 0.98 | 59*P5A040E14**10 |
| CAP**2417A** | 0.98 | 0.92 | 59*P5A060E17**14 |
| CAP**3017A** | 1.00 | 0.92 | 59*P5A060E17**14 |
| CNPH*2417A** | 0.97 | 0.91 | 59*P5A060E17**14 |
| CNPH*3017A** | 1.00 | 0.92 | 59*P5A060E17**14 |
| CNPH*3117A** | 1.02 | 0.93 | 59*P5A060E17**14 |
| CNPV*2417A** | 0.97 | 0.91 | 59*P5A060E17**14 |
| CNPV*3017A** | 1.00 | 0.92 | 59*P5A060E17**14 |
| CNPV*3117A** | 1.02 | 0.93 | 59*P5A060E17**14 |
| CSPH*2412A** | 0.98 | 0.92 | 59*P5A060E17**14 |
| CSPH*3012A** | 1.00 | 0.92 | 59*P5A060E17**14 |

See note on pg. 50

# DETAILED COOLING CAPACITIES# CONTINUED

| EVAPORATOR AIR | | CONDENSER ENTERING AIR TEMPERATURES °F (°C) | | | | | | | | | | | | | | | | | |
|---|---|---|---|---|---|---|---|---|---|---|---|---|---|---|---|---|---|---|---|
| | | 75 (23.9) | | | 85 (29.4) | | | 95 (35) | | | 105 (40.6) | | | 115 (46.1) | | | 125 (51.7) | | |
| CFM | EWB °F (°C) | Capacity MBtuh | | Total Sys. KW** | Capacity MBtuh | | Total Sys. KW** | Capacity MBtuh | | Total Sys. KW** | Capacity MBtuh | | Total Sys. KW** | Capacity MBtuh | | Total Sys. KW** | Capacity MBtuh | | Total Sys. KW** |
| | | Total | Sens‡ | | Total | Sens‡ | | Total | Sens‡ | | Total | Sens‡ | | Total | Sens‡ | | Total | Sens‡ | |
| 25HCB330A30 Outdoor Section With FY4ANF030 Indoor Section | | | | | | | | | | | | | | | | | | | |
| 875 | 72 (22.2) | 35.79 | 17.64 | 2.16 | 34.09 | 16.98 | 2.44 | 32.29 | 16.30 | 2.74 | 30.43 | 15.61 | 3.07 | 28.40 | 14.86 | 3.43 | 26.15 | 14.05 | 3.82 |
| | 67 (19.4) | 32.75 | 21.77 | 2.16 | 31.19 | 21.11 | 2.43 | 29.54 | 20.42 | 2.73 | 27.82 | 19.70 | 3.07 | 25.96 | 18.94 | 3.43 | 23.92 | 18.12 | 3.83 |
| | 63 (17.2)†† | 30.50 | 21.10 | 2.15 | 29.04 | 20.44 | 2.43 | 27.50 | 19.74 | 2.73 | 25.89 | 19.02 | 3.07 | 24.15 | 18.26 | 3.43 | 22.26 | 17.45 | 3.83 |
| | 62 (16.7) | 29.92 | 25.87 | 2.15 | 28.49 | 25.18 | 2.43 | 26.99 | 24.45 | 2.73 | 25.43 | 23.67 | 3.06 | 23.79 | 22.80 | 3.43 | 22.14 | 22.14 | 3.83 |
| | 57 (13.9) | 28.64 | 28.64 | 2.15 | 27.51 | 27.51 | 2.42 | 26.31 | 26.31 | 2.73 | 25.04 | 25.04 | 3.07 | 23.66 | 23.66 | 3.43 | 22.14 | 22.14 | 3.83 |
| 1000 | 72 (22.2) | 36.41 | 18.38 | 2.21 | 34.64 | 17.72 | 2.48 | 32.77 | 17.03 | 2.78 | 30.84 | 16.33 | 3.12 | 28.73 | 15.57 | 3.48 | 26.40 | 14.75 | 3.87 |
| | 67 (19.4) | 33.35 | 23.03 | 2.20 | 31.72 | 22.36 | 2.48 | 30.00 | 21.65 | 2.78 | 28.22 | 20.92 | 3.11 | 26.27 | 20.15 | 3.47 | 24.17 | 19.31 | 3.87 |
| | 63 (17.2)†† | 31.09 | 22.29 | 2.20 | 29.56 | 21.61 | 2.47 | 27.96 | 20.90 | 2.78 | 26.27 | 20.17 | 3.11 | 24.47 | 19.39 | 3.47 | 22.52 | 18.55 | 3.87 |
| | 62 (16.7) | 30.53 | 27.59 | 2.20 | 29.06 | 26.85 | 2.47 | 27.52 | 26.05 | 2.77 | 25.93 | 25.93 | 3.11 | 24.45 | 24.45 | 3.48 | 22.82 | 22.82 | 3.87 |
| | 57 (13.9) | 29.74 | 29.74 | 2.20 | 28.54 | 28.54 | 2.47 | 27.26 | 27.26 | 2.77 | 25.91 | 25.91 | 3.11 | 24.45 | 24.45 | 3.48 | 22.83 | 22.83 | 3.87 |
| 1125 | 72 (22.2) | 36.88 | 19.09 | 2.25 | 35.06 | 18.43 | 2.53 | 33.12 | 17.73 | 2.83 | 31.13 | 17.01 | 3.16 | 28.96 | 16.25 | 3.52 | 26.56 | 15.42 | 3.91 |
| | 67 (19.4) | 33.80 | 24.25 | 2.25 | 32.12 | 23.56 | 2.52 | 30.34 | 22.85 | 2.82 | 28.49 | 22.10 | 3.16 | 26.51 | 21.31 | 3.52 | 24.34 | 20.44 | 3.91 |
| | 63 (17.2)†† | 31.54 | 23.44 | 2.24 | 29.96 | 22.75 | 2.52 | 28.30 | 22.03 | 2.82 | 26.56 | 21.28 | 3.15 | 24.71 | 20.48 | 3.52 | 22.71 | 19.60 | 3.92 |
| | 62 (16.7) | 31.05 | 29.15 | 2.24 | 29.55 | 28.32 | 2.52 | 28.04 | 28.04 | 2.82 | 26.61 | 26.61 | 3.15 | 25.08 | 25.08 | 3.52 | 23.36 | 23.36 | 3.92 |
| | 57 (13.9) | 30.66 | 30.66 | 2.24 | 29.39 | 29.39 | 2.52 | 28.04 | 28.04 | 2.82 | 26.62 | 26.62 | 3.15 | 25.08 | 25.08 | 3.52 | 23.37 | 23.37 | 3.92 |

| COOLING INDOOR MODEL | CAPACITY | POWER | FURNACE MODEL |
|---|---|---|---|
| *FB4CNF030 | 1.00 | 1.00 | |
| FB4CNF030 | 1.00 | 0.98 | |
| FB4CNF036 | 1.00 | 0.98 | |
| FB4CNF036 | 1.00 | 1.00 | |
| FE4AN(B,F)003 | 1.00 | 0.92 | |
| FE4ANF002 | 1.00 | 0.96 | |
| FF1ENP030 | 0.99 | 1.01 | |
| FF1ENP031 | 0.99 | 0.95 | |
| FF1ENP036 | 1.00 | 1.02 | |
| FF1ENP037 | 1.00 | 0.96 | |
| FV4BN(B,F)003 | 1.00 | 0.92 | |
| FV4BNF002 | 1.00 | 0.96 | |
| FX4CN(B,F)036 | 1.00 | 0.96 | |
| FX4CNF030 | 1.00 | 0.96 | |
| FX4DN(B,F)031 | 1.00 | 0.96 | |
| FX4DN(B,F)037 | 1.00 | 0.92 | |
| FY4ANF030 | 1.00 | 1.02 | |
| FY4ANF036 | 1.00 | 1.03 | |
| FY5BNF030 | 1.00 | 0.98 | |
| FY5BNF030 | 1.00 | 1.00 | |
| FY5BNF036 | 1.00 | 1.00 | |
| CAP**3014A** | 1.00 | 1.02 | |
| CAP**3017A** | 1.00 | 1.02 | |
| CAP**3614A** | 1.00 | 1.02 | |
| CAP**3617A** | 1.00 | 1.02 | |
| CAP**3619A** | 1.00 | 1.02 | |
| CAP**3621A** | 1.00 | 1.02 | |
| CAP**4823A** | 1.00 | 1.00 | |
| CNPF*3618A** | 1.00 | 1.02 | |
| CNPH*3017A** | 1.00 | 1.02 | |
| CNPH*3117A** | 1.00 | 1.00 | |
| CNPH*3617A** | 1.00 | 1.02 | |
| CNPV*3014A** | 1.00 | 1.02 | |
| CNPV*3017A** | 1.00 | 1.02 | |
| CNPV*3117A** | 1.00 | 1.00 | |
| CNPV*3617A** | 1.00 | 1.02 | |

| COOLING INDOOR MODEL | CAPACITY | POWER | FURNACE MODEL |
|---|---|---|---|
| CNPV*3621A** | 1.00 | 1.02 | |
| CNPV*3717A** | 1.00 | 0.98 | |
| CSPH*3012A** | 1.00 | 1.02 | |
| CSPH*3612A** | 1.00 | 1.02 | |
| CAP**3014A** | 1.00 | 0.96 | 58CV(A,X)070–12 |
| CAP**3614A** | 1.00 | 0.96 | 58CV(A,X)070–12 |
| CNPH*3017A** | 1.00 | 0.96 | 58CV(A,X)070–12 |
| CNPH*3117A** | 1.00 | 0.96 | 58CV(A,X)070–12 |
| CNPH*3617A** | 1.00 | 0.96 | 58CV(A,X)070–12 |
| CNPV*3014A** | 1.00 | 0.98 | 58CV(A,X)070–12 |
| CSPH*3012A** | 1.00 | 0.96 | 58CV(A,X)070–12 |
| CSPH*3612A** | 1.00 | 0.96 | 58CV(A,X)070–12 |
| CAP**3017A** | 1.00 | 0.96 | 58CV(A,X)090–16 |
| CAP**3617A** | 1.00 | 0.96 | 58CV(A,X)090–16 |
| CNPH*3017A** | 1.00 | 0.96 | 58CV(A,X)090–16 |
| CNPH*3117A** | 1.00 | 0.92 | 58CV(A,X)090–16 |
| CNPH*3617A** | 1.00 | 0.96 | 58CV(A,X)090–16 |
| CNPV*3017A** | 1.00 | 0.96 | 58CV(A,X)090–16 |
| CNPV*3117A** | 1.00 | 0.92 | 58CV(A,X)090–16 |
| CNPV*3617A** | 1.00 | 0.96 | 58CV(A,X)090–16 |
| CNPV*3717A** | 1.00 | 0.92 | 58CV(A,X)090–16 |
| CSPH*3012A** | 1.00 | 0.96 | 58CV(A,X)090–16 |
| CSPH*3612A** | 1.00 | 0.92 | 58CV(A,X)090–16 |
| CAP**3621A** | 1.00 | 0.96 | 58CV(A,X)110–20 |
| CNPH*3017A** | 1.00 | 0.96 | 58CV(A,X)110–20 |
| CNPH*3117A** | 1.00 | 0.92 | 58CV(A,X)110–20 |
| CNPH*3617A** | 1.00 | 0.96 | 58CV(A,X)110–20 |
| CNPV*3621A** | 1.00 | 0.96 | 58CV(A,X)110–20 |
| CSPH*3012A** | 1.00 | 0.96 | 58CV(A,X)110–20 |
| CSPH*3612A** | 1.00 | 0.92 | 58CV(A,X)110–20 |
| CNPH*3017A** | 1.00 | 0.96 | 58CV(A,X)135–22 |
| CNPH*3117A** | 1.00 | 0.92 | 58CV(A,X)135–22 |
| CNPH*3617A** | 1.00 | 0.96 | 58CV(A,X)135–22 |
| CSPH*3012A** | 1.00 | 0.96 | 58CV(A,X)135–22 |
| CSPH*3612A** | 1.00 | 0.92 | 58CV(A,X)135–22 |
| CNPH*3017A** | 1.00 | 0.96 | 58CV(A,X)155–22 |

| COOLING INDOOR MODEL | CAPACITY | POWER | FURNACE MODEL |
|---|---|---|---|
| CNPH*3117A** | 1.00 | 0.92 | 58CV(A,X)155–22 |
| CNPH*3617A** | 1.00 | 0.96 | 58CV(A,X)155–22 |
| CSPH*3012A** | 1.00 | 0.96 | 58CV(A,X)155–22 |
| CSPH*3612A** | 1.00 | 0.92 | 58CV(A,X)155–22 |
| CAP**3619A** | 1.00 | 0.98 | 58HDV040– –12 |
| CAP**4823A** | 1.00 | 0.96 | 58HDV040– –12 |
| CNPH*3017A** | 1.00 | 0.98 | 58HDV040– –12 |
| CNPH*3117A** | 1.00 | 0.96 | 58HDV040– –12 |
| CNPH*3617A** | 1.00 | 0.98 | 58HDV040– –12 |
| CNPV*3017A** | 0.99 | 0.98 | 58HDV040– –12 |
| CNPV*3117A** | 1.00 | 0.96 | 58HDV040– –12 |
| CNPV*3617A** | 0.99 | 0.98 | 58HDV040– –12 |
| CNPV*3621A** | 0.99 | 0.98 | 58HDV040– –12 |
| CNPV*3717A** | 1.00 | 0.96 | 58HDV040– –12 |
| CSPH*3012A** | 1.00 | 0.98 | 58HDV040– –12 |
| CSPH*3612A** | 1.00 | 0.98 | 58HDV040– –12 |
| CAP**3619A** | 1.00 | 0.98 | 58HDV060– –12 |
| CAP**4823A** | 1.00 | 0.96 | 58HDV060– –12 |
| CNPH*3017A** | 1.00 | 0.98 | 58HDV060– –12 |
| CNPH*3117A** | 1.00 | 0.96 | 58HDV060– –12 |
| CNPH*3617A** | 1.00 | 0.98 | 58HDV060– –12 |
| CNPV*3017A** | 1.00 | 0.98 | 58HDV060– –12 |
| CNPV*3117A** | 1.00 | 0.96 | 58HDV060– –12 |
| CNPV*3617A** | 1.00 | 0.98 | 58HDV060– –12 |
| CNPV*3621A** | 1.00 | 0.98 | 58HDV060– –12 |
| CNPV*3717A** | 1.00 | 0.96 | 58HDV060– –12 |
| CSPH*3012A** | 1.00 | 0.98 | 58HDV060– –12 |
| CSPH*3612A** | 1.00 | 0.98 | 58HDV060– –12 |
| CNPH*3017A** | 1.00 | 0.98 | 58HDV080– –20 |
| CNPH*3617A** | 1.00 | 0.98 | 58HDV080– –20 |
| CNPV*3621A** | 1.00 | 0.96 | 58HDV080– –20 |
| CSPH*3012A** | 1.00 | 0.98 | 58HDV080– –20 |
| CSPH*3612A** | 1.00 | 0.96 | 58HDV080– –20 |
| CNPH*3017A** | 1.00 | 0.96 | 58HDV100– –20 |
| CNPH*3617A** | 1.00 | 0.96 | 58HDV100– –20 |
| CSPH*3012A** | 1.00 | 0.96 | 58HDV100– –20 |

# DETAILED COOLING CAPACITIES# CONTINUED

**25HCB330A30 Outdoor Section With FY4ANF030 Indoor Section**

| COOLING INDOOR MODEL | CAPACITY | POWER | FURNACE MODEL |
|---|---|---|---|
| CSPH*3612A** | 1.00 | 0.96 | 58HDV100– –20 |
| CAP**3017A** | 1.00 | 0.96 | 58ME(B,C)060–12 |
| CAP**3617A** | 1.00 | 0.96 | 58ME(B,C)060–12 |
| CNPH*3017A** | 1.00 | 0.96 | 58ME(B,C)060–12 |
| CNPH*3117A** | 1.00 | 0.92 | 58ME(B,C)060–12 |
| CNPH*3617A** | 1.00 | 0.96 | 58ME(B,C)060–12 |
| CNPV*3017A** | 1.00 | 0.96 | 58ME(B,C)060–12 |
| CNPV*3117A** | 1.00 | 0.92 | 58ME(B,C)060–12 |
| CNPV*3617A** | 1.00 | 0.96 | 58ME(B,C)060–12 |
| CNPV*3717A** | 1.00 | 0.92 | 58ME(B,C)060–12 |
| CSPH*3012A** | 1.00 | 0.96 | 58ME(B,C)060–12 |
| CSPH*3612A** | 1.00 | 0.92 | 58ME(B,C)060–12 |
| CAP**3017A** | 1.00 | 0.96 | 58ME(B,C)080–12 |
| CAP**3617A** | 1.00 | 0.96 | 58ME(B,C)080–12 |
| CNPH*3017A** | 1.00 | 0.96 | 58ME(B,C)080–12 |
| CNPH*3117A** | 1.00 | 0.92 | 58ME(B,C)080–12 |
| CNPH*3617A** | 1.00 | 0.96 | 58ME(B,C)080–12 |
| CNPV*3017A** | 1.00 | 0.96 | 58ME(B,C)080–12 |
| CNPV*3117A** | 1.00 | 0.92 | 58ME(B,C)080–12 |
| CNPV*3617A** | 1.00 | 0.96 | 58ME(B,C)080–12 |
| CNPV*3717A** | 1.00 | 0.92 | 58ME(B,C)080–12 |
| CSPH*3012A** | 1.00 | 0.96 | 58ME(B,C)080–12 |
| CSPH*3612A** | 1.00 | 0.92 | 58ME(B,C)080–12 |
| CAP**3017A** | 1.00 | 0.96 | 58ME(B,C)080–16 |
| CAP**3617A** | 1.00 | 0.96 | 58ME(B,C)080–16 |
| CNPH*3017A** | 1.00 | 0.96 | 58ME(B,C)080–16 |
| CNPH*3117A** | 1.00 | 0.92 | 58ME(B,C)080–16 |
| CNPH*3617A** | 1.00 | 0.96 | 58ME(B,C)080–16 |
| CNPV*3017A** | 1.00 | 0.96 | 58ME(B,C)080–16 |
| CNPV*3117A** | 1.00 | 0.92 | 58ME(B,C)080–16 |
| CNPV*3617A** | 1.00 | 0.96 | 58ME(B,C)080–16 |
| CNPV*3717A** | 1.00 | 0.92 | 58ME(B,C)080–16 |
| CSPH*3012A** | 1.00 | 0.96 | 58ME(B,C)080–16 |
| CSPH*3612A** | 1.00 | 0.96 | 58ME(B,C)080–16 |
| CAP**3017A** | 1.00 | 0.96 | 58MEB040–12 |
| CAP**3617A** | 1.00 | 0.96 | 58MEB040–12 |
| CNPH*3017A** | 1.00 | 0.96 | 58MEB040–12 |
| CNPH*3117A** | 1.00 | 0.92 | 58MEB040–12 |
| CNPH*3617A** | 1.00 | 0.96 | 58MEB040–12 |
| CNPV*3017A** | 1.00 | 0.96 | 58MEB040–12 |
| CNPV*3117A** | 1.00 | 0.92 | 58MEB040–12 |
| CNPV*3617A** | 1.00 | 0.96 | 58MEB040–12 |
| CNPV*3717A** | 1.00 | 0.90 | 58MEB040–12 |
| CSPH*3012A** | 1.00 | 0.96 | 58MEB040–12 |
| CSPH*3612A** | 1.00 | 0.92 | 58MEB040–12 |
| CNPH*3017A** | 1.00 | 0.96 | 58MV(B,C)040–14 |
| CNPH*3617A** | 1.00 | 0.96 | 58MV(B,C)040–14 |
| CSPH*3012A** | 1.00 | 0.96 | 58MV(B,C)040–14 |
| CSPH*3612A** | 1.00 | 0.96 | 58MV(B,C)040–14 |
| CAP**3017A** | 1.00 | 0.96 | 58MV(B,C)060–14 |
| CAP**3617A** | 1.00 | 0.96 | 58MV(B,C)060–14 |
| CNPH*3017A** | 1.00 | 0.96 | 58MV(B,C)060–14 |
| CNPH*3117A** | 1.00 | 0.92 | 58MV(B,C)060–14 |
| CNPH*3617A** | 1.00 | 0.96 | 58MV(B,C)060–14 |

| COOLING INDOOR MODEL | CAPACITY | POWER | FURNACE MODEL |
|---|---|---|---|
| CNPV*3017A** | 1.00 | 0.96 | 58MV(B,C)060–14 |
| CNPV*3117A** | 1.00 | 0.92 | 58MV(B,C)060–14 |
| CNPV*3617A** | 1.00 | 0.96 | 58MV(B,C)060–14 |
| CNPV*3717A** | 1.00 | 0.92 | 58MV(B,C)060–14 |
| CSPH*3012A** | 1.00 | 0.96 | 58MV(B,C)060–14 |
| CSPH*3612A** | 1.00 | 0.96 | 58MV(B,C)060–14 |
| CAP**3621A** | 1.00 | 0.96 | 58MV(B,C)080–14 |
| CNPH*3017A** | 1.00 | 0.96 | 58MV(B,C)080–14 |
| CNPH*3117A** | 1.00 | 0.96 | 58MV(B,C)080–14 |
| CNPH*3617A** | 1.00 | 0.96 | 58MV(B,C)080–14 |
| CNPV*3621A** | 1.00 | 0.96 | 58MV(B,C)080–14 |
| CSPH*3012A** | 1.00 | 0.96 | 58MV(B,C)080–14 |
| CSPH*3612A** | 1.00 | 0.96 | 58MV(B,C)080–14 |
| CAP**3621A** | 1.00 | 0.96 | 58MV(B,C)080–20 |
| CNPH*3017A** | 1.00 | 0.96 | 58MV(B,C)080–20 |
| CNPH*3117A** | 1.00 | 0.92 | 58MV(B,C)080–20 |
| CNPH*3617A** | 1.00 | 0.96 | 58MV(B,C)080–20 |
| CNPV*3621A** | 1.00 | 0.96 | 58MV(B,C)080–20 |
| CSPH*3012A** | 1.00 | 0.96 | 58MV(B,C)080–20 |
| CSPH*3612A** | 1.00 | 0.96 | 58MV(B,C)080–20 |
| CAP**3621A** | 1.00 | 0.96 | 58MV(B,C)100–20 |
| CNPH*3017A** | 1.00 | 0.96 | 58MV(B,C)100–20 |
| CNPH*3117A** | 1.00 | 0.96 | 58MV(B,C)100–20 |
| CNPH*3617A** | 1.00 | 0.96 | 58MV(B,C)100–20 |
| CNPV*3621A** | 1.00 | 0.96 | 58MV(B,C)100–20 |
| CSPH*3012A** | 1.00 | 0.96 | 58MV(B,C)100–20 |
| CSPH*3612A** | 1.00 | 0.92 | 58MV(B,C)100–20 |
| CNPH*3017A** | 1.00 | 0.96 | 58MV(B,C)120–20 |
| CNPH*3117A** | 1.00 | 0.92 | 58MV(B,C)120–20 |
| CNPH*3617A** | 1.00 | 0.96 | 58MV(B,C)120–20 |
| CSPH*3012A** | 1.00 | 0.96 | 58MV(B,C)120–20 |
| CSPH*3612A** | 1.00 | 0.92 | 58MV(B,C)120–20 |
| CNPH*3117A** | 1.00 | 0.96 | 58MVB040–14 |
| CAP**3017A** | 1.00 | 1.00 | 58PH*070–16 |
| CAP**3617A** | 1.00 | 1.00 | 58PH*070–16 |
| CNPH*3017A** | 1.00 | 1.00 | 58PH*070–16 |
| CNPH*3117A** | 1.00 | 0.96 | 58PH*070–16 |
| CNPH*3617A** | 1.00 | 1.00 | 58PH*070–16 |
| CNPV*3017A** | 1.00 | 1.00 | 58PH*070–16 |
| CNPV*3117A** | 1.00 | 0.96 | 58PH*070–16 |
| CNPV*3617A** | 1.00 | 1.00 | 58PH*070–16 |
| CNPV*3717A** | 1.00 | 0.92 | 58PH*070–16 |
| CSPH*3012A** | 1.00 | 1.00 | 58PH*070–16 |
| CSPH*3612A** | 1.00 | 0.96 | 58PH*070–16 |
| CAP**3621A** | 1.00 | 0.96 | 58PH*090–16 |
| CNPH*3017A** | 1.00 | 0.96 | 58PH*090–16 |
| CNPH*3117A** | 1.00 | 0.92 | 58PH*090–16 |
| CNPH*3617A** | 1.00 | 0.96 | 58PH*090–16 |
| CNPV*3621A** | 1.00 | 0.96 | 58PH*090–16 |
| CSPH*3012A** | 1.00 | 0.96 | 58PH*090–16 |
| CSPH*3612A** | 1.00 | 0.92 | 58PH*090–16 |
| CAP**3017A** | 1.00 | 0.96 | 58VLR105–12 |
| CAP**3617A** | 1.00 | 0.96 | 58VLR105–12 |
| CNPH*3017A** | 1.00 | 0.96 | 58VLR105–12 |

| COOLING INDOOR MODEL | CAPACITY | POWER | FURNACE MODEL |
|---|---|---|---|
| CNPH*3617A** | 1.00 | 0.96 | 58VLR105–12 |
| CNPV*3017A** | 1.00 | 0.96 | 58VLR105–12 |
| CNPV*3617A** | 1.00 | 0.96 | 58VLR105–12 |
| CSPH*3012A** | 1.00 | 0.96 | 58VLR105–12 |
| CSPH*3612A** | 0.99 | 0.94 | 58VLR105–12 |
| CAP**3017A** | 0.99 | 0.94 | 58VMR105–12 |
| CAP**3617A** | 0.99 | 0.94 | 58VMR105–12 |
| CNPH*3017A** | 0.99 | 0.94 | 58VMR105–12 |
| CNPH*3617A** | 0.99 | 0.94 | 58VMR105–12 |
| CNPV*3017A** | 0.99 | 0.94 | 58VMR105–12 |
| CNPV*3617A** | 0.99 | 0.94 | 58VMR105–12 |
| CSPH*3012A** | 0.99 | 0.95 | 58VMR105–12 |
| CSPH*3612A** | 1.00 | 0.96 | 58VMR105–12 |
| CAP**3017A** | 0.99 | 0.95 | OVLAAB036098 |
| CAP**3617A** | 1.00 | 0.96 | OVLAAB036098 |
| CNPH*3017A** | 0.99 | 0.98 | OVLAAB036098 |
| CNPH*3117A** | 1.00 | 0.96 | OVLAAB036098 |
| CNPH*3617A** | 0.99 | 0.98 | OVLAAB036098 |
| CNPV*3017A** | 0.99 | 0.98 | OVLAAB036098 |
| CNPV*3117A** | 1.00 | 0.96 | OVLAAB036098 |
| CNPV*3617A** | 0.99 | 0.98 | OVLAAB036098 |
| CNPV*3717A** | 1.00 | 0.92 | OVLAAB036098 |
| CSPH*3012A** | 0.99 | 0.98 | OVLAAB036098 |
| CSPH*3612A** | 1.00 | 0.96 | OVLAAB036098 |
| CAP**3621A** | 1.00 | 0.96 | OVLAAB048112 |
| CNPH*3017A** | 1.00 | 0.96 | OVLAAB048112 |
| CNPH*3117A** | 1.00 | 0.96 | OVLAAB048112 |
| CNPH*3617A** | 1.00 | 0.96 | OVLAAB048112 |
| CSPH*3012A** | 1.00 | 0.96 | OVLAAB048112 |
| CSPH*3612A** | 1.00 | 0.96 | OVLAAB048112 |
| CAP**3017A** | 0.99 | 0.98 | OVMAAB036098 |
| CAP**3617A** | 1.00 | 0.98 | OVMAAB036098 |
| CNPH*3017A** | 0.99 | 0.98 | OVMAAB036098 |
| CNPH*3117A** | 1.00 | 0.96 | OVMAAB036098 |
| CNPH*3617A** | 0.99 | 0.98 | OVMAAB036098 |
| CNPV*3017A** | 0.99 | 0.98 | OVMAAB036098 |
| CNPV*3117A** | 1.00 | 0.96 | OVMAAB036098 |
| CNPV*3617A** | 0.99 | 0.98 | OVMAAB036098 |
| CNPV*3717A** | 1.00 | 0.96 | OVMAAB036098 |
| CSPH*3012A** | 1.00 | 0.98 | OVMAAB036098 |
| CSPH*3612A** | 1.00 | 0.96 | OVMAAB036098 |
| CAP**3017A** | 1.00 | 0.96 | OVMAAB042112 |
| CAP**3617A** | 1.00 | 0.96 | OVMAAB042112 |
| CNPH*3017A** | 1.00 | 0.96 | OVMAAB042112 |
| CNPH*3117A** | 1.00 | 0.92 | OVMAAB042112 |
| CNPH*3617A** | 1.00 | 0.96 | OVMAAB042112 |
| CNPV*3017A** | 1.00 | 0.96 | OVMAAB042112 |
| CNPV*3117A** | 1.00 | 0.92 | OVMAAB042112 |
| CNPV*3617A** | 1.00 | 0.96 | OVMAAB042112 |
| CNPV*3717A** | 1.00 | 0.92 | OVMAAB042112 |
| CSPH*3012A** | 1.00 | 0.96 | OVMAAB042112 |
| CSPH*3612A** | 1.00 | 0.92 | OVMAAB042112 |
| CAP**3017A** | 0.97 | 0.94 | 59*N*A060V17**14 |
| CAP**3617A** | 0.98 | 0.94 | 59*N*A060V17**14 |

# DETAILED COOLING CAPACITIES# CONTINUED

**25HCB330A30 Outdoor Section With FY4ANF030 Indoor Section**

| COOLING INDOOR MODEL | CAPACITY | POWER | FURNACE MODEL |
|---|---|---|---|
| CAP**3619A** | 0.98 | 0.94 | 59*N*A060V17**14 |
| CAP**3621A** | 0.98 | 0.94 | 59*N*A060V17**14 |
| CNPH*3017A** | 0.98 | 0.95 | 59*N*A060V17**14 |
| CNPH*3117A** | 1.00 | 0.95 | 59*N*A060V17**14 |
| CNPH*3617A** | 0.98 | 0.95 | 59*N*A060V17**14 |
| CNPV*3017A** | 0.98 | 0.95 | 59*N*A060V17**14 |
| CNPV*3117A** | 1.00 | 0.95 | 59*N*A060V17**14 |
| CNPV*3617A** | 0.98 | 0.95 | 59*N*A060V17**14 |
| CNPV*3621A** | 0.98 | 0.95 | 59*N*A060V17**14 |
| CNPV*3717A** | 1.01 | 0.95 | 59*N*A060V17**14 |
| CSPH*3012A** | 0.98 | 0.95 | 59*N*A060V17**14 |
| CSPH*3612A** | 1.00 | 0.95 | 59*N*A060V17**14 |
| CAP**3017A** | 0.98 | 0.94 | 59*N*A080V17**14 |
| CAP**3617A** | 0.99 | 0.94 | 59*N*A080V17**14 |
| CAP**3619A** | 0.99 | 0.94 | 59*N*A080V17**14 |
| CAP**3621A** | 0.99 | 0.93 | 59*N*A080V17**14 |
| CNPH*3017A** | 0.98 | 0.94 | 59*N*A080V17**14 |
| CNPH*3117A** | 1.01 | 0.94 | 59*N*A080V17**14 |
| CNPH*3617A** | 0.98 | 0.94 | 59*N*A080V17**14 |
| CNPV*3017A** | 0.98 | 0.94 | 59*N*A080V17**14 |
| CNPV*3117A** | 1.01 | 0.94 | 59*N*A080V17**14 |
| CNPV*3617A** | 0.98 | 0.94 | 59*N*A080V17**14 |
| CNPV*3621A** | 0.98 | 0.94 | 59*N*A080V17**14 |
| CNPV*3717A** | 1.02 | 0.95 | 59*N*A080V17**14 |
| CSPH*3012A** | 0.99 | 0.95 | 59*N*A080V17**14 |
| CSPH*3612A** | 1.01 | 0.94 | 59*N*A080V17**14 |
| CAP**3619A** | 0.99 | 0.94 | 59*N*A100V21**20 |
| CAP**3621A** | 0.99 | 0.93 | 59*N*A100V21**20 |
| CNPH*3017A** | 0.99 | 0.94 | 59*N*A100V21**20 |
| CNPH*3117A** | 1.01 | 0.95 | 59*N*A100V21**20 |
| CNPH*3617A** | 0.99 | 0.94 | 59*N*A100V21**20 |
| CNPV*3621A** | 0.99 | 0.94 | 59*N*A100V21**20 |
| CSPH*3012A** | 0.99 | 0.95 | 59*N*A100V21**20 |
| CSPH*3612A** | 1.01 | 0.95 | 59*N*A100V21**20 |
| CNPH*3017A** | 0.99 | 0.93 | 59*N*A120V24**22 |
| CNPH*3117A** | 1.01 | 0.95 | 59*N*A120V24**22 |
| CNPH*3617A** | 0.99 | 0.93 | 59*N*A120V24**22 |
| CSPH*3012A** | 0.99 | 0.94 | 59*N*A120V24**22 |
| CSPH*3612A** | 1.01 | 0.94 | 59*N*A120V24**22 |
| CAP**3017A** | 0.99 | 0.95 | 59*P5A060E17**14 |
| CAP**3617A** | 0.99 | 0.94 | 59*P5A060E17**14 |
| CAP**3619A** | 0.99 | 0.94 | 59*P5A060E17**14 |
| CAP**3621A** | 0.99 | 0.95 | 59*P5A060E17**14 |
| CNPH*3017A** | 0.99 | 0.95 | 59*P5A060E17**14 |
| CNPH*3117A** | 1.01 | 0.95 | 59*P5A060E17**14 |
| CNPH*3617A** | 0.99 | 0.95 | 59*P5A060E17**14 |
| CNPV*3017A** | 0.99 | 0.95 | 59*P5A060E17**14 |
| CNPV*3117A** | 1.01 | 0.95 | 59*P5A060E17**14 |
| CNPV*3617A** | 0.99 | 0.95 | 59*P5A060E17**14 |
| CNPV*3621A** | 0.99 | 0.95 | 59*P5A060E17**14 |
| CNPV*3717A** | 1.03 | 0.96 | 59*P5A060E17**14 |
| CSPH*3012A** | 0.99 | 0.95 | 59*P5A060E17**14 |
| CSPH*3612A** | 1.01 | 0.95 | 59*P5A060E17**14 |
| CAP**3017A** | 0.99 | 0.96 | 59*P5A080E17**16 |

| COOLING INDOOR MODEL | CAPACITY | POWER | FURNACE MODEL |
|---|---|---|---|
| CAP**3617A** | 1.00 | 0.96 | 59*P5A080E17**16 |
| CAP**3619A** | 1.00 | 0.96 | 59*P5A080E17**16 |
| CAP**3621A** | 1.00 | 0.95 | 59*P5A080E17**16 |
| CNPH*3017A** | 0.99 | 0.96 | 59*P5A080E17**16 |
| CNPH*3117A** | 1.02 | 0.96 | 59*P5A080E17**16 |
| CNPH*3617A** | 0.99 | 0.96 | 59*P5A080E17**16 |
| CNPV*3017A** | 0.99 | 0.96 | 59*P5A080E17**16 |
| CNPV*3117A** | 1.02 | 0.96 | 59*P5A080E17**16 |
| CNPV*3617A** | 0.99 | 0.96 | 59*P5A080E17**16 |
| CNPV*3621A** | 0.99 | 0.96 | 59*P5A080E17**16 |
| CNPV*3717A** | 1.03 | 0.96 | 59*P5A080E17**16 |
| CSPH*3012A** | 0.99 | 0.96 | 59*P5A080E17**16 |
| CSPH*3612A** | 1.02 | 0.96 | 59*P5A080E17**16 |

See note on pg. 50

# DETAILED COOLING CAPACITIES# CONTINUED

| EVAPORATOR AIR | | CONDENSER ENTERING AIR TEMPERATURES °F (°C) | | | | | | | | | | | | | | | | | |
|---|---|---|---|---|---|---|---|---|---|---|---|---|---|---|---|---|---|---|---|
| | | 75 (23.9) | | | 85 (29.4) | | | 95 (35) | | | 105 (40.6) | | | 115 (46.1) | | | 125 (51.7) | | |
| CFM | EWB °F (°C) | Capacity MBtuh Total | Capacity MBtuh Sens‡ | Total Sys. KW** | Capacity MBtuh Total | Capacity MBtuh Sens‡ | Total Sys. KW** | Capacity MBtuh Total | Capacity MBtuh Sens‡ | Total Sys. KW** | Capacity MBtuh Total | Capacity MBtuh Sens‡ | Total Sys. KW** | Capacity MBtuh Total | Capacity MBtuh Sens‡ | Total Sys. KW** | Capacity MBtuh Total | Capacity MBtuh Sens‡ | Total Sys. KW** |
| 25HCB336A30 Outdoor Section With FY4ANF036 Indoor Section | | | | | | | | | | | | | | | | | | | |
| 1050 | 72 (22.2) | 40.40 | 20.45 | 2.52 | 38.54 | 19.75 | 2.80 | 36.56 | 19.01 | 3.12 | 34.48 | 18.26 | 3.46 | 32.22 | 17.44 | 3.83 | 29.71 | 16.54 | 4.24 |
| | 67 (19.4) | 36.96 | 25.67 | 2.51 | 35.23 | 24.94 | 2.80 | 33.39 | 24.19 | 3.11 | 31.45 | 23.40 | 3.45 | 29.35 | 22.56 | 3.83 | 27.05 | 21.63 | 4.23 |
| | 63 (17.2)†† | 34.44 | 24.83 | 2.51 | 32.80 | 24.10 | 2.79 | 31.07 | 23.34 | 3.10 | 29.24 | 22.53 | 3.45 | 27.26 | 21.68 | 3.82 | 25.10 | 20.74 | 4.22 |
| | 62 (16.7) | 33.82 | 30.80 | 2.51 | 32.24 | 30.00 | 2.79 | 30.59 | 29.14 | 3.10 | 28.87 | 28.87 | 3.45 | 27.24 | 27.24 | 3.82 | 25.46 | 25.46 | 4.22 |
| | 57 (13.9) | 33.00 | 33.00 | 2.51 | 31.70 | 31.70 | 2.79 | 30.32 | 30.32 | 3.10 | 28.85 | 28.85 | 3.45 | 27.25 | 27.25 | 3.82 | 25.47 | 25.47 | 4.22 |
| 1200 | 72 (22.2) | 40.96 | 21.34 | 2.58 | 39.04 | 20.63 | 2.87 | 36.99 | 19.89 | 3.18 | 34.85 | 19.12 | 3.52 | 32.51 | 18.30 | 3.90 | 29.93 | 17.39 | 4.30 |
| | 67 (19.4) | 37.50 | 27.20 | 2.58 | 35.70 | 26.46 | 2.86 | 33.80 | 25.70 | 3.17 | 31.80 | 24.89 | 3.51 | 29.64 | 24.02 | 3.89 | 27.27 | 23.06 | 4.29 |
| | 63 (17.2)†† | 34.96 | 26.27 | 2.57 | 33.27 | 25.52 | 2.85 | 31.47 | 24.74 | 3.17 | 29.58 | 23.92 | 3.51 | 27.55 | 23.04 | 3.88 | 25.34 | 22.07 | 4.28 |
| | 62 (16.7) | 34.45 | 32.77 | 2.57 | 32.87 | 32.61 | 2.85 | 31.30 | 31.30 | 3.17 | 29.75 | 29.75 | 3.51 | 28.06 | 28.06 | 3.88 | 26.18 | 26.18 | 4.29 |
| | 57 (13.9) | 34.14 | 34.14 | 2.57 | 32.77 | 32.77 | 2.85 | 31.31 | 31.31 | 3.17 | 29.75 | 29.75 | 3.51 | 28.06 | 28.06 | 3.88 | 26.18 | 26.18 | 4.29 |
| 1350 | 72 (22.2) | 41.39 | 22.20 | 2.64 | 39.41 | 21.49 | 2.93 | 37.31 | 20.74 | 3.24 | 35.10 | 19.96 | 3.58 | 32.71 | 19.13 | 3.96 | 30.06 | 18.21 | 4.36 |
| | 67 (19.4) | 37.90 | 28.69 | 2.64 | 36.05 | 27.94 | 2.92 | 34.10 | 27.15 | 3.23 | 32.05 | 26.32 | 3.58 | 29.84 | 25.42 | 3.95 | 27.43 | 24.41 | 4.35 |
| | 63 (17.2)†† | 35.36 | 27.66 | 2.63 | 33.61 | 26.90 | 2.92 | 31.77 | 26.10 | 3.23 | 29.84 | 25.25 | 3.57 | 27.76 | 24.33 | 3.94 | 25.51 | 23.30 | 4.34 |
| | 62 (16.7) | 35.07 | 35.07 | 2.63 | 33.63 | 33.63 | 2.92 | 32.10 | 32.10 | 3.23 | 30.47 | 30.47 | 3.57 | 28.70 | 28.70 | 3.95 | 26.73 | 26.73 | 4.35 |
| | 57 (13.9) | 35.07 | 35.07 | 2.63 | 33.63 | 33.63 | 2.92 | 32.10 | 32.10 | 3.23 | 30.48 | 30.48 | 3.57 | 28.71 | 28.71 | 3.95 | 26.73 | 26.73 | 4.35 |

| COOLING INDOOR MODEL | CAPACITY | POWER | FURNACE MODEL |
|---|---|---|---|
| *FY5BNF036 | 1.00 | 1.00 | |
| FB4CNF036 | 0.99 | 0.99 | |
| FB4CNF036 | 1.00 | 1.00 | |
| FB4CNF042 | 1.00 | 1.00 | |
| FB4CNF042 | 1.04 | 0.95 | |
| FE4AN(B,F)003 | 1.01 | 0.95 | |
| FE4ANF002 | 0.99 | 0.95 | |
| FF1ENP036 | 0.99 | 1.04 | |
| FF1ENP037 | 0.99 | 0.97 | |
| FV4BN(B,F)003 | 1.01 | 0.95 | |
| FV4BNF002 | 0.99 | 0.95 | |
| FX4CN(B,F)036 | 1.01 | 0.97 | |
| FX4CN(B,F)042 | 1.03 | 0.98 | |
| FX4DN(B,F)037 | 1.04 | 0.95 | |
| FX4DN(B,F)043 | 1.04 | 0.95 | |
| FY4ANF036 | 0.99 | 1.04 | |
| FY4ANF042 | 1.01 | 1.03 | |
| FY5BNF036 | 1.01 | 1.01 | |
| FY5BNF042 | 1.00 | 1.00 | |
| FY5BNF042 | 1.02 | 1.01 | |
| CAP**3614A** | 0.99 | 1.01 | |
| CAP**3617A** | 0.99 | 1.01 | |
| CAP**3619A** | 0.99 | 1.01 | |
| CAP**3621A** | 0.99 | 1.01 | |
| CAP**4221A** | 1.01 | 1.02 | |
| CAP**4224A** | 1.01 | 1.02 | |
| CAP**4823A** | 1.02 | 1.02 | |
| CNPF*3618A** | 0.99 | 1.01 | |
| CNPH*3617A** | 0.99 | 1.01 | |
| CNPH*4221A** | 1.01 | 1.02 | |
| CNPH*4321A** | 1.04 | 1.04 | |
| CNPV*3617A** | 0.99 | 1.01 | |
| CNPV*3621A** | 0.99 | 1.01 | |
| CNPV*3717A** | 1.04 | 1.04 | |
| CNPV*4217A** | 1.02 | 1.07 | |
| CNPV*4221A** | 1.01 | 1.02 | |
| CNPV*4324A** | 1.04 | 1.04 | |

| COOLING INDOOR MODEL | CAPACITY | POWER | FURNACE MODEL |
|---|---|---|---|
| CSPH*3612A** | 1.02 | 1.02 | |
| CSPH*4212A** | 1.02 | 1.02 | |
| CAP**3614A** | 0.99 | 0.97 | 58CV(A,X)070–12 |
| CNPH*3617A** | 0.99 | 0.97 | 58CV(A,X)070–12 |
| CNPH*4221A** | 1.00 | 0.96 | 58CV(A,X)070–12 |
| CNPH*4321A** | 1.03 | 0.94 | 58CV(A,X)070–12 |
| CSPH*3612A** | 1.01 | 0.97 | 58CV(A,X)070–12 |
| CSPH*4212A** | 1.02 | 0.97 | 58CV(A,X)070–12 |
| CAP**3617A** | 0.99 | 0.95 | 58CV(A,X)090–16 |
| CNPH*3617A** | 0.99 | 0.95 | 58CV(A,X)090–16 |
| CNPH*4221A** | 1.01 | 0.96 | 58CV(A,X)090–16 |
| CNPH*4321A** | 1.03 | 0.94 | 58CV(A,X)090–16 |
| CNPV*3617A** | 0.99 | 0.95 | 58CV(A,X)090–16 |
| CNPV*3717A** | 1.04 | 0.95 | 58CV(A,X)090–16 |
| CNPV*4217A** | 1.01 | 0.97 | 58CV(A,X)090–16 |
| CSPH*3612A** | 1.02 | 0.96 | 58CV(A,X)090–16 |
| CSPH*4212A** | 1.02 | 0.96 | 58CV(A,X)090–16 |
| CAP**3621A** | 1.00 | 0.93 | 58CV(A,X)110–20 |
| CAP**4221A** | 1.01 | 0.96 | 58CV(A,X)110–20 |
| CNPH*3617A** | 0.99 | 0.95 | 58CV(A,X)110–20 |
| CNPH*4221A** | 1.01 | 0.96 | 58CV(A,X)110–20 |
| CNPH*4321A** | 1.03 | 0.94 | 58CV(A,X)110–20 |
| CNPV*3621A** | 0.99 | 0.95 | 58CV(A,X)110–20 |
| CNPV*4221A** | 1.01 | 0.96 | 58CV(A,X)110–20 |
| CSPH*3612A** | 1.02 | 0.96 | 58CV(A,X)110–20 |
| CSPH*4212A** | 1.02 | 0.96 | 58CV(A,X)110–20 |
| CAP**4224A** | 1.01 | 0.95 | 58CV(A,X)135–22 |
| CNPH*3617A** | 0.99 | 0.95 | 58CV(A,X)135–22 |
| CNPH*4221A** | 1.01 | 0.96 | 58CV(A,X)135–22 |
| CNPH*4321A** | 1.03 | 0.93 | 58CV(A,X)135–22 |
| CNPV*4324A** | 1.04 | 0.93 | 58CV(A,X)135–22 |
| CSPH*3612A** | 1.02 | 0.96 | 58CV(A,X)135–22 |
| CSPH*4212A** | 1.02 | 0.96 | 58CV(A,X)135–22 |
| CAP**4224A** | 1.01 | 0.95 | 58CV(A,X)155–22 |
| CNPH*3617A** | 0.99 | 0.95 | 58CV(A,X)155–22 |
| CNPH*4221A** | 1.01 | 0.95 | 58CV(A,X)155–22 |
| CNPH*4321A** | 1.03 | 0.93 | 58CV(A,X)155–22 |

| COOLING INDOOR MODEL | CAPACITY | POWER | FURNACE MODEL |
|---|---|---|---|
| CNPV*4324A** | 1.04 | 0.92 | 58CV(A,X)155–22 |
| CSPH*3612A** | 1.02 | 0.96 | 58CV(A,X)155–22 |
| CSPH*4212A** | 1.03 | 0.97 | 58CV(A,X)155–22 |
| CAP**4823A** | 1.01 | 0.99 | 58HDV040– –12 |
| CNPH*4221A** | 0.98 | 0.98 | 58HDV040– –12 |
| CNPH*4321A** | 1.03 | 1.01 | 58HDV040– –12 |
| CNPV*3617A** | 0.98 | 0.98 | 58HDV040– –12 |
| CNPV*3621A** | 0.98 | 0.98 | 58HDV040– –12 |
| CNPV*3717A** | 1.02 | 1.01 | 58HDV040– –12 |
| CNPV*4217A** | 1.00 | 1.00 | 58HDV040– –12 |
| CNPV*4221A** | 0.99 | 0.99 | 58HDV040– –12 |
| CSPH*3612A** | 1.00 | 1.00 | 58HDV040– –12 |
| CSPH*4212A** | 1.01 | 0.99 | 58HDV040– –12 |
| CAP**3619A** | 0.99 | 0.99 | 58HDV060– –12 |
| CAP**4823A** | 1.02 | 1.01 | 58HDV060– –12 |
| CNPH*3617A** | 0.98 | 0.98 | 58HDV060– –12 |
| CNPH*4221A** | 1.00 | 0.98 | 58HDV060– –12 |
| CNPH*4321A** | 1.04 | 1.00 | 58HDV060– –12 |
| CNPV*3617A** | 0.99 | 0.99 | 58HDV060– –12 |
| CNPV*3621A** | 0.99 | 0.97 | 58HDV060– –12 |
| CNPV*3717A** | 1.03 | 0.98 | 58HDV060– –12 |
| CNPV*4217A** | 1.01 | 0.99 | 58HDV060– –12 |
| CNPV*4221A** | 1.00 | 0.98 | 58HDV060– –12 |
| CSPH*3612A** | 1.01 | 0.99 | 58HDV060– –12 |
| CSPH*4212A** | 1.02 | 1.00 | 58HDV060– –12 |
| CAP**4823A** | 1.04 | 0.99 | 58HDV080– –20 |
| CNPH*3617A** | 0.99 | 0.98 | 58HDV080– –20 |
| CNPH*4221A** | 1.01 | 0.99 | 58HDV080– –20 |
| CNPH*4321A** | 1.05 | 1.01 | 58HDV080– –20 |
| CNPV*3621A** | 1.00 | 0.98 | 58HDV080– –20 |
| CNPV*4221A** | 1.01 | 0.97 | 58HDV080– –20 |
| CNPV*4324A** | 1.05 | 0.96 | 58HDV080– –20 |
| CSPH*3612A** | 1.02 | 0.98 | 58HDV080– –20 |
| CSPH*4212A** | 1.04 | 0.99 | 58HDV080– –20 |
| CAP**4224A** | 1.01 | 0.97 | 58HDV100– –20 |
| CNPH*3617A** | 0.99 | 0.98 | 58HDV100– –20 |
| CNPH*4221A** | 1.01 | 0.96 | 58HDV100– –20 |

# DETAILED COOLING CAPACITIES# CONTINUED

**25HCB336A30 Outdoor Section With FY4ANF036 Indoor Section**

| COOLING INDOOR MODEL | CAPACITY | POWER | FURNACE MODEL |
|---|---|---|---|
| CNPH*4321A** | 1.05 | 0.96 | 58HDV100– –20 |
| CNPV*4324A** | 1.05 | 0.95 | 58HDV100– –20 |
| CNPV*4324A** | 1.05 | 0.96 | 58HDV100– –20 |
| CSPH*3612A** | 1.02 | 0.97 | 58HDV100– –20 |
| CSPH*4212A** | 1.03 | 0.98 | 58HDV100– –20 |
| CAP**3617A** | 1.00 | 0.96 | 58ME(B,C)060–12 |
| CNPH*3617A** | 0.99 | 0.95 | 58ME(B,C)060–12 |
| CNPH*4221A** | 1.01 | 0.97 | 58ME(B,C)060–12 |
| CNPH*4321A** | 1.03 | 0.94 | 58ME(B,C)060–12 |
| CNPV*3617A** | 0.99 | 0.95 | 58ME(B,C)060–12 |
| CNPV*3717A** | 1.04 | 0.95 | 58ME(B,C)060–12 |
| CNPV*4217A** | 1.02 | 0.97 | 58ME(B,C)060–12 |
| CSPH*3612A** | 1.02 | 0.98 | 58ME(B,C)060–12 |
| CSPH*4212A** | 1.04 | 0.99 | 58ME(B,C)060–12 |
| CAP**3617A** | 1.00 | 0.96 | 58ME(B,C)080–12 |
| CNPH*3617A** | 0.99 | 0.95 | 58ME(B,C)080–12 |
| CNPH*4221A** | 1.01 | 0.97 | 58ME(B,C)080–12 |
| CNPH*4321A** | 1.03 | 0.94 | 58ME(B,C)080–12 |
| CNPV*3617A** | 0.99 | 0.95 | 58ME(B,C)080–12 |
| CNPV*3717A** | 1.04 | 0.95 | 58ME(B,C)080–12 |
| CNPV*4217A** | 1.02 | 0.97 | 58ME(B,C)080–12 |
| CSPH*3612A** | 1.02 | 0.98 | 58ME(B,C)080–12 |
| CSPH*4212A** | 1.03 | 0.98 | 58ME(B,C)080–12 |
| CAP**3617A** | 1.00 | 0.96 | 58ME(B,C)080–16 |
| CNPH*3617A** | 0.99 | 0.95 | 58ME(B,C)080–16 |
| CNPH*4221A** | 1.01 | 0.97 | 58ME(B,C)080–16 |
| CNPH*4321A** | 1.03 | 0.94 | 58ME(B,C)080–16 |
| CNPV*3617A** | 0.99 | 0.95 | 58ME(B,C)080–16 |
| CNPV*3717A** | 1.04 | 0.95 | 58ME(B,C)080–16 |
| CNPV*4217A** | 1.02 | 0.97 | 58ME(B,C)080–16 |
| CSPH*3612A** | 1.02 | 0.98 | 58ME(B,C)080–16 |
| CSPH*4212A** | 1.03 | 0.98 | 58ME(B,C)080–16 |
| CAP**3621A** | 1.01 | 0.96 | 58ME(B,C)100–20 |
| CAP**4221A** | 1.01 | 0.97 | 58ME(B,C)100–20 |
| CNPH*3617A** | 0.99 | 0.95 | 58ME(B,C)100–20 |
| CNPH*4221A** | 1.01 | 0.96 | 58ME(B,C)100–20 |
| CNPH*4321A** | 1.03 | 0.93 | 58ME(B,C)100–20 |
| CNPV*3621A** | 0.99 | 0.95 | 58ME(B,C)100–20 |
| CNPV*4221A** | 1.01 | 0.96 | 58ME(B,C)100–20 |
| CSPH*3612A** | 1.02 | 0.93 | 58ME(B,C)100–20 |
| CSPH*4212A** | 1.03 | 0.94 | 58ME(B,C)100–20 |
| CAP**3617A** | 1.00 | 0.96 | 58MEB040–12 |
| CNPH*3617A** | 0.99 | 0.95 | 58MEB040–12 |
| CNPH*4221A** | 1.01 | 0.97 | 58MEB040–12 |
| CNPH*4321A** | 1.03 | 0.94 | 58MEB040–12 |
| CNPV*3617A** | 0.99 | 0.95 | 58MEB040–12 |
| CNPV*3717A** | 1.04 | 0.95 | 58MEB040–12 |
| CNPV*4217A** | 1.02 | 0.97 | 58MEB040–12 |
| CSPH*3612A** | 1.02 | 0.98 | 58MEB040–12 |
| CSPH*4212A** | 1.03 | 0.94 | 58MEB040–12 |
| CAP**4224A** | 1.00 | 0.96 | 58MV(B,C)040–14 |
| CNPH*3617A** | 0.99 | 0.97 | 58MV(B,C)040–14 |
| CNPH*4221A** | 1.00 | 0.96 | 58MV(B,C)040–14 |
| CSPH*3612A** | 1.01 | 0.97 | 58MV(B,C)040–14 |

| COOLING INDOOR MODEL | CAPACITY | POWER | FURNACE MODEL |
|---|---|---|---|
| CSPH*4212A** | 1.02 | 0.97 | 58MV(B,C)040–14 |
| CAP**3617A** | 0.99 | 0.95 | 58MV(B,C)060–14 |
| CNPH*3617A** | 0.99 | 0.95 | 58MV(B,C)060–14 |
| CNPH*4221A** | 1.00 | 0.96 | 58MV(B,C)060–14 |
| CNPH*4321A** | 1.03 | 0.94 | 58MV(B,C)060–14 |
| CNPV*3617A** | 0.99 | 0.95 | 58MV(B,C)060–14 |
| CNPV*3717A** | 1.04 | 0.95 | 58MV(B,C)060–14 |
| CNPV*4217A** | 1.02 | 0.97 | 58MV(B,C)060–14 |
| CSPH*3612A** | 1.01 | 0.97 | 58MV(B,C)060–14 |
| CSPH*4212A** | 1.02 | 0.96 | 58MV(B,C)060–14 |
| CAP**3621A** | 0.99 | 0.95 | 58MV(B,C)080–14 |
| CAP**4221A** | 0.99 | 0.95 | 58MV(B,C)080–14 |
| CNPH*3617A** | 0.98 | 0.96 | 58MV(B,C)080–14 |
| CNPH*4221A** | 0.99 | 0.95 | 58MV(B,C)080–14 |
| CNPH*4321A** | 1.03 | 0.94 | 58MV(B,C)080–14 |
| CNPV*3621A** | 0.98 | 0.96 | 58MV(B,C)080–14 |
| CNPV*4221A** | 0.99 | 0.95 | 58MV(B,C)080–14 |
| CSPH*3612A** | 1.01 | 0.97 | 58MV(B,C)080–14 |
| CSPH*4212A** | 1.02 | 0.97 | 58MV(B,C)080–14 |
| CAP**3621A** | 0.99 | 0.95 | 58MV(B,C)080–20 |
| CAP**4221A** | 1.00 | 0.96 | 58MV(B,C)080–20 |
| CNPH*3617A** | 0.99 | 0.95 | 58MV(B,C)080–20 |
| CNPH*4221A** | 1.00 | 0.96 | 58MV(B,C)080–20 |
| CNPH*4321A** | 1.03 | 0.94 | 58MV(B,C)080–20 |
| CNPV*3621A** | 0.99 | 0.95 | 58MV(B,C)080–20 |
| CNPV*4221A** | 1.00 | 0.96 | 58MV(B,C)080–20 |
| CSPH*3612A** | 1.01 | 0.97 | 58MV(B,C)080–20 |
| CSPH*4212A** | 1.02 | 0.97 | 58MV(B,C)080–20 |
| CAP**3621A** | 0.99 | 0.95 | 58MV(B,C)100–20 |
| CAP**4221A** | 1.00 | 0.96 | 58MV(B,C)100–20 |
| CNPH*3617A** | 0.99 | 0.95 | 58MV(B,C)100–20 |
| CNPH*4221A** | 1.00 | 0.96 | 58MV(B,C)100–20 |
| CNPH*4321A** | 1.03 | 0.94 | 58MV(B,C)100–20 |
| CNPV*3621A** | 0.99 | 0.95 | 58MV(B,C)100–20 |
| CNPV*4221A** | 1.00 | 0.96 | 58MV(B,C)100–20 |
| CSPH*3612A** | 1.02 | 0.97 | 58MV(B,C)100–20 |
| CSPH*4212A** | 1.02 | 0.96 | 58MV(B,C)100–20 |
| CAP**4224A** | 1.00 | 0.96 | 58MV(B,C)120–20 |
| CNPH*3617A** | 0.99 | 0.95 | 58MV(B,C)120–20 |
| CNPH*4221A** | 1.00 | 0.96 | 58MV(B,C)120–20 |
| CNPH*4321A** | 1.03 | 0.94 | 58MV(B,C)120–20 |
| CNPV*4324A** | 1.04 | 0.93 | 58MV(B,C)120–20 |
| CSPH*3612A** | 1.01 | 0.97 | 58MV(B,C)120–20 |
| CSPH*4212A** | 1.02 | 0.96 | 58MV(B,C)120–20 |
| CNPH*4321A** | 1.03 | 0.98 | 58MVB040–14 |
| CNPV*4324A** | 1.03 | 0.94 | 58MVB040–14 |
| CAP**3614A** | 0.99 | 0.99 | 58PH*045–08 |
| CNPH*3617A** | 0.99 | 0.99 | 58PH*045–08 |
| CNPH*4221A** | 1.00 | 1.00 | 58PH*045–08 |
| CNPH*4321A** | 1.03 | 1.01 | 58PH*045–08 |
| CSPH*3612A** | 1.01 | 1.01 | 58PH*045–08 |
| CSPH*4212A** | 1.02 | 1.02 | 58PH*045–08 |
| CAP**3617A** | 0.99 | 0.98 | 58PH*070–16 |
| CNPH*3617A** | 0.99 | 0.99 | 58PH*070–16 |

| COOLING INDOOR MODEL | CAPACITY | POWER | FURNACE MODEL |
|---|---|---|---|
| CNPH*4221A** | 1.00 | 1.00 | 58PH*070–16 |
| CNPH*4321A** | 1.03 | 0.98 | 58PH*070–16 |
| CNPV*3617A** | 0.99 | 0.99 | 58PH*070–16 |
| CNPV*3717A** | 1.04 | 0.99 | 58PH*070–16 |
| CNPV*4217A** | 1.01 | 1.01 | 58PH*070–16 |
| CSPH*3612A** | 1.01 | 0.97 | 58PH*070–16 |
| CSPH*4212A** | 1.02 | 0.98 | 58PH*070–16 |
| CAP**3621A** | 1.01 | 0.96 | 58PH*090–16 |
| CAP**4221A** | 1.01 | 0.97 | 58PH*090–16 |
| CNPH*3617A** | 0.99 | 0.95 | 58PH*090–16 |
| CNPH*4221A** | 1.01 | 0.97 | 58PH*090–16 |
| CNPH*4321A** | 1.03 | 0.94 | 58PH*090–16 |
| CNPV*3621A** | 1.00 | 0.96 | 58PH*090–16 |
| CNPV*4221A** | 1.01 | 0.97 | 58PH*090–16 |
| CSPH*3612A** | 1.02 | 0.94 | 58PH*090–16 |
| CSPH*4212A** | 1.03 | 0.94 | 58PH*090–16 |
| CAP**3621A** | 1.01 | 0.97 | 58PH*110–20 |
| CAP**4221A** | 1.02 | 0.93 | 58PH*110–20 |
| CNPH*3617A** | 1.00 | 0.96 | 58PH*110–20 |
| CNPH*4221A** | 1.01 | 0.97 | 58PH*110–20 |
| CNPH*4321A** | 1.03 | 0.93 | 58PH*110–20 |
| CNPV*3621A** | 1.00 | 0.96 | 58PH*110–20 |
| CNPV*4221A** | 1.01 | 0.97 | 58PH*110–20 |
| CSPH*3612A** | 1.03 | 0.94 | 58PH*110–20 |
| CSPH*4212A** | 1.04 | 0.95 | 58PH*110–20 |
| CAP**3617A** | 0.99 | 0.97 | 58VLR105–12 |
| CNPH*3617A** | 0.98 | 0.96 | 58VLR105–12 |
| CNPH*4221A** | 1.00 | 0.96 | 58VLR105–12 |
| CNPV*3617A** | 0.99 | 0.97 | 58VLR105–12 |
| CNPV*4217A** | 1.01 | 0.96 | 58VLR105–12 |
| CSPH*3612A** | 1.01 | 0.96 | 58VLR105–12 |
| CSPH*4212A** | 1.02 | 0.97 | 58VLR105–12 |
| CAP**3621A** | 0.99 | 0.95 | 58VLR120–20 |
| CAP**4221A** | 1.00 | 0.96 | 58VLR120–20 |
| CNPH*3617A** | 0.99 | 0.95 | 58VLR120–20 |
| CNPH*4221A** | 1.00 | 0.96 | 58VLR120–20 |
| CNPV*3621A** | 0.99 | 0.95 | 58VLR120–20 |
| CNPV*4221A** | 1.00 | 0.96 | 58VLR120–20 |
| CSPH*3612A** | 1.01 | 0.92 | 58VLR120–20 |
| CSPH*4212A** | 1.02 | 0.93 | 58VLR120–20 |
| CAP**3617A** | 0.98 | 0.96 | 58VMR105–12 |
| CNPH*3617A** | 0.68 | 0.66 | 58VMR105–12 |
| CNPH*4221A** | 0.99 | 0.95 | 58VMR105–12 |
| CNPV*3617A** | 0.97 | 0.95 | 58VMR105–12 |
| CNPV*4217A** | 1.00 | 0.96 | 58VMR105–12 |
| CSPH*3612A** | 1.00 | 0.96 | 58VMR105–12 |
| CSPH*4212A** | 1.01 | 0.96 | 58VMR105–12 |
| CAP**3621A** | 0.99 | 0.95 | 58VMR120–20 |
| CAP**4221A** | 0.99 | 0.95 | 58VMR120–20 |
| CNPH*3617A** | 0.98 | 0.96 | 58VMR120–20 |
| CNPH*4221A** | 0.99 | 0.95 | 58VMR120–20 |
| CNPV*3621A** | 0.98 | 0.96 | 58VMR120–20 |
| CNPV*4221A** | 0.99 | 0.95 | 58VMR120–20 |
| CSPH*3612A** | 1.00 | 0.96 | 58VMR120–20 |

# DETAILED COOLING CAPACITIES# CONTINUED

**25HCB336A30 Outdoor Section With FY4ANF036 Indoor Section**

| COOLING INDOOR MODEL | CAPACITY | POWER | FURNACE MODEL |
|---|---|---|---|
| CSPH*4212A** | 1.01 | 0.96 | 58VMR120 – 20 |
| CAP**3617A** | 0.98 | 0.96 | OVLAAB036098 |
| CNPH*3617A** | 0.98 | 0.98 | OVLAAB036098 |
| CNPH*4221A** | 0.99 | 0.98 | OVLAAB036098 |
| CNPH*4321A** | 1.02 | 0.98 | OVLAAB036098 |
| CNPV*3617A** | 0.98 | 0.98 | OVLAAB036098 |
| CNPV*3717A** | 1.02 | 0.98 | OVLAAB036098 |
| CNPV*4217A** | 1.00 | 0.98 | OVLAAB036098 |
| CSPH*3612A** | 1.01 | 0.99 | OVLAAB036098 |
| CSPH*4212A** | 1.01 | 0.97 | OVLAAB036098 |
| CAP**3621A** | 0.99 | 0.98 | OVLAAB048112 |
| CAP**4221A** | 1.00 | 0.96 | OVLAAB048112 |
| CNPH*3617A** | 0.99 | 0.97 | OVLAAB048112 |
| CNPH*4221A** | 1.00 | 0.98 | OVLAAB048112 |
| CNPH*4321A** | 1.04 | 0.95 | OVLAAB048112 |
| CNPV*3621A** | 0.99 | 0.97 | OVLAAB048112 |
| CNPV*4221A** | 1.00 | 0.98 | OVLAAB048112 |
| CSPH*3612A** | 1.02 | 0.97 | OVLAAB048112 |
| CSPH*4212A** | 1.02 | 0.98 | OVLAAB048112 |
| CNPH*3617A** | 1.01 | 0.99 | OVLAAB060154 |
| CNPH*4221A** | 1.02 | 0.98 | OVLAAB060154 |
| CNPH*4321A** | 1.06 | 0.97 | OVLAAB060154 |
| CSPH*3612A** | 1.04 | 0.99 | OVLAAB060154 |
| CSPH*4212A** | 1.05 | 0.96 | OVLAAB060154 |
| CAP**3617A** | 0.99 | 0.97 | OVMAAB036098 |
| CNPH*3617A** | 0.98 | 0.98 | OVMAAB036098 |
| CNPH*4221A** | 0.99 | 0.98 | OVMAAB036098 |
| CNPH*4321A** | 1.02 | 0.98 | OVMAAB036098 |
| CNPV*3617A** | 0.98 | 0.98 | OVMAAB036098 |
| CNPV*3717A** | 1.02 | 0.98 | OVMAAB036098 |
| CNPV*4217A** | 1.01 | 0.99 | OVMAAB036098 |
| CSPH*3612A** | 1.01 | 0.99 | OVMAAB036098 |
| CSPH*4212A** | 1.02 | 0.97 | OVMAAB036098 |
| CAP**3617A** | 0.99 | 0.97 | OVMAAB042112 |
| CNPH*3617A** | 0.99 | 0.97 | OVMAAB042112 |
| CNPH*4221A** | 1.00 | 0.96 | OVMAAB042112 |
| CNPH*4321A** | 1.03 | 0.94 | OVMAAB042112 |
| CNPV*3617A** | 0.99 | 0.97 | OVMAAB042112 |
| CNPV*3717A** | 1.03 | 0.94 | OVMAAB042112 |
| CNPV*4217A** | 1.01 | 0.96 | OVMAAB042112 |
| CSPH*3612A** | 1.01 | 0.97 | OVMAAB042112 |
| CSPH*4212A** | 1.02 | 0.97 | OVMAAB042112 |
| CAP**3617A** | 0.97 | 0.94 | 59*N*A060V17**14 |
| CAP**3619A** | 0.97 | 0.94 | 59*N*A060V17**14 |
| CAP**3621A** | 0.98 | 0.93 | 59*N*A060V17**14 |
| CAP**4221A** | 0.98 | 0.94 | 59*N*A060V17**14 |
| CNPH*3617A** | 0.97 | 0.94 | 59*N*A060V17**14 |
| CNPH*4221A** | 0.98 | 0.94 | 59*N*A060V17**14 |
| CNPH*4321A** | 1.01 | 0.93 | 59*N*A060V17**14 |
| CNPV*3617A** | 0.97 | 0.94 | 59*N*A060V17**14 |
| CNPV*3621A** | 0.97 | 0.94 | 59*N*A060V17**14 |
| CNPV*3717A** | 1.01 | 0.94 | 59*N*A060V17**14 |
| CNPV*4217A** | 0.99 | 0.95 | 59*N*A060V17**14 |
| CNPV*4221A** | 0.98 | 0.94 | 59*N*A060V17**14 |

| COOLING INDOOR MODEL | CAPACITY | POWER | FURNACE MODEL |
|---|---|---|---|
| CSPH*3612A** | 0.99 | 0.93 | 59*N*A060V17**14 |
| CSPH*4212A** | 1.00 | 0.93 | 59*N*A060V17**14 |
| CAP**3617A** | 0.98 | 0.93 | 59*N*A080V17**14 |
| CAP**3619A** | 0.98 | 0.93 | 59*N*A080V17**14 |
| CAP**3621A** | 0.98 | 0.91 | 59*N*A080V17**14 |
| CAP**4221A** | 0.98 | 0.92 | 59*N*A080V17**14 |
| CNPH*3617A** | 0.97 | 0.93 | 59*N*A080V17**14 |
| CNPH*4221A** | 0.98 | 0.92 | 59*N*A080V17**14 |
| CNPH*4321A** | 1.01 | 0.93 | 59*N*A080V17**14 |
| CNPV*3617A** | 0.97 | 0.93 | 59*N*A080V17**14 |
| CNPV*3621A** | 0.97 | 0.93 | 59*N*A080V17**14 |
| CNPV*3717A** | 1.01 | 0.93 | 59*N*A080V17**14 |
| CNPV*4217A** | 0.99 | 0.93 | 59*N*A080V17**14 |
| CNPV*4221A** | 0.98 | 0.92 | 59*N*A080V17**14 |
| CSPH*3612A** | 1.00 | 0.93 | 59*N*A080V17**14 |
| CSPH*4212A** | 1.01 | 0.92 | 59*N*A080V17**14 |
| CAP**3619A** | 0.98 | 0.92 | 59*N*A100V21**20 |
| CAP**3621A** | 0.98 | 0.92 | 59*N*A100V21**20 |
| CAP**4221A** | 0.99 | 0.92 | 59*N*A100V21**20 |
| CAP**4224A** | 0.99 | 0.92 | 59*N*A100V21**20 |
| CNPH*3617A** | 0.98 | 0.93 | 59*N*A100V21**20 |
| CNPH*4221A** | 0.99 | 0.92 | 59*N*A100V21**20 |
| CNPH*4321A** | 1.02 | 0.93 | 59*N*A100V21**20 |
| CNPV*3621A** | 0.98 | 0.93 | 59*N*A100V21**20 |
| CNPV*4221A** | 0.99 | 0.92 | 59*N*A100V21**20 |
| CNPV*4324A** | 1.02 | 0.94 | 59*N*A100V21**20 |
| CSPH*3612A** | 1.00 | 0.93 | 59*N*A100V21**20 |
| CSPH*4212A** | 1.01 | 0.93 | 59*N*A100V21**20 |
| CAP**4224A** | 0.99 | 0.91 | 59*N*A120V24**22 |
| CNPH*3617A** | 0.98 | 0.91 | 59*N*A120V24**22 |
| CNPH*4221A** | 0.99 | 0.92 | 59*N*A120V24**22 |
| CNPH*4321A** | 1.02 | 0.91 | 59*N*A120V24**22 |
| CNPV*4324A** | 1.02 | 0.90 | 59*N*A120V24**22 |
| CSPH*3612A** | 1.01 | 0.92 | 59*N*A120V24**22 |
| CSPH*4212A** | 1.01 | 0.93 | 59*N*A120V24**22 |
| CAP**3617A** | 0.98 | 0.95 | 59*P5A060E17**14 |
| CAP**3619A** | 0.98 | 0.95 | 59*P5A060E17**14 |
| CAP**3621A** | 0.99 | 0.95 | 59*P5A060E17**14 |
| CAP**4221A** | 0.99 | 0.95 | 59*P5A060E17**14 |
| CNPH*3617A** | 0.98 | 0.94 | 59*P5A060E17**14 |
| CNPH*4221A** | 0.99 | 0.96 | 59*P5A060E17**14 |
| CNPH*4321A** | 1.02 | 0.95 | 59*P5A060E17**14 |
| CNPV*3617A** | 0.98 | 0.94 | 59*P5A060E17**14 |
| CNPV*3621A** | 0.98 | 0.94 | 59*P5A060E17**14 |
| CNPV*3717A** | 1.02 | 0.95 | 59*P5A060E17**14 |
| CNPV*4217A** | 1.00 | 0.96 | 59*P5A060E17**14 |
| CNPV*4221A** | 0.99 | 0.96 | 59*P5A060E17**14 |
| CSPH*3612A** | 1.01 | 0.96 | 59*P5A060E17**14 |
| CSPH*4212A** | 1.01 | 0.94 | 59*P5A060E17**14 |
| CAP**3617A** | 0.98 | 0.94 | 59*P5A080E17**16 |
| CAP**3619A** | 0.98 | 0.94 | 59*P5A080E17**16 |
| CAP**3621A** | 0.98 | 0.92 | 59*P5A080E17**16 |
| CAP**4221A** | 0.99 | 0.93 | 59*P5A080E17**16 |
| CNPH*3617A** | 0.98 | 0.93 | 59*P5A080E17**16 |

| COOLING INDOOR MODEL | CAPACITY | POWER | FURNACE MODEL |
|---|---|---|---|
| CNPH*4221A** | 0.99 | 0.92 | 59*P5A080E17**16 |
| CNPH*4321A** | 1.02 | 0.94 | 59*P5A080E17**16 |
| CNPV*3617A** | 0.98 | 0.93 | 59*P5A080E17**16 |
| CNPV*3621A** | 0.98 | 0.93 | 59*P5A080E17**16 |
| CNPV*3717A** | 1.02 | 0.93 | 59*P5A080E17**16 |
| CNPV*4217A** | 1.00 | 0.93 | 59*P5A080E17**16 |
| CNPV*4221A** | 0.99 | 0.92 | 59*P5A080E17**16 |
| CSPH*3612A** | 1.01 | 0.94 | 59*P5A080E17**16 |
| CSPH*4212A** | 1.01 | 0.93 | 59*P5A080E17**16 |

See note on pg. 50

# DETAILED COOLING CAPACITIES# CONTINUED

| EVAPORATOR AIR | | CONDENSER ENTERING AIR TEMPERATURES °F (°C) | | | | | | | | | | | | | | | | | |
|---|---|---|---|---|---|---|---|---|---|---|---|---|---|---|---|---|---|---|---|
| | | 75 (23.9) | | | 85 (29.4) | | | 95 (35) | | | 105 (40.6) | | | 115 (46.1) | | | 125 (51.7) | | |
| CFM | EWB °F (°C) | Capacity MBtuh | | Total Sys. KW** | Capacity MBtuh | | Total Sys. KW** | Capacity MBtuh | | Total Sys. KW** | Capacity MBtuh | | Total Sys. KW** | Capacity MBtuh | | Total Sys. KW** | Capacity MBtuh | | Total Sys. KW** |
| | | Total | Sens‡ | | Total | Sens‡ | | Total | Sens‡ | | Total | Sens‡ | | Total | Sens‡ | | Total | Sens‡ | |
| 25HCB342A30 Outdoor Section With FY4ANF042 Indoor Section | | | | | | | | | | | | | | | | | | | |
| 1225 | 72 (22.2) | 48.26 | 24.63 | 3.08 | 46.00 | 23.75 | 3.41 | 43.63 | 22.84 | 3.77 | 41.15 | 21.90 | 4.17 | 38.47 | 20.90 | 4.61 | 35.49 | 19.80 | 5.09 |
| | 67 (19.4) | 44.21 | 30.69 | 3.06 | 42.14 | 29.80 | 3.39 | 39.96 | 28.86 | 3.76 | 37.67 | 27.90 | 4.16 | 35.20 | 26.87 | 4.60 | 32.50 | 25.76 | 5.08 |
| | 63 (17.2)†† | 41.23 | 29.75 | 3.05 | 39.29 | 28.85 | 3.38 | 37.24 | 27.91 | 3.75 | 35.09 | 26.94 | 4.15 | 32.79 | 25.91 | 4.60 | 30.28 | 24.80 | 5.08 |
| | 62 (16.7) | 40.45 | 36.69 | 3.05 | 38.56 | 35.75 | 3.38 | 36.58 | 34.74 | 3.74 | 34.53 | 33.66 | 4.15 | 32.38 | 32.38 | 4.60 | 30.32 | 30.32 | 5.08 |
| | 57 (13.9) | 39.05 | 39.05 | 3.04 | 37.54 | 37.54 | 3.37 | 35.93 | 35.93 | 3.74 | 34.22 | 34.22 | 4.15 | 32.37 | 32.37 | 4.60 | 30.32 | 30.32 | 5.08 |
| 1400 | 72 (22.2) | 48.98 | 25.68 | 3.16 | 46.64 | 24.79 | 3.48 | 44.18 | 23.87 | 3.84 | 41.64 | 22.93 | 4.25 | 38.84 | 21.90 | 4.68 | 35.77 | 20.79 | 5.16 |
| | 67 (19.4) | 44.93 | 32.50 | 3.14 | 42.77 | 31.59 | 3.47 | 40.50 | 30.64 | 3.83 | 38.12 | 29.66 | 4.23 | 35.57 | 28.61 | 4.68 | 32.78 | 27.46 | 5.16 |
| | 63 (17.2)†† | 41.93 | 31.44 | 3.13 | 39.91 | 30.53 | 3.45 | 37.78 | 29.58 | 3.82 | 35.55 | 28.58 | 4.23 | 33.17 | 27.53 | 4.67 | 30.58 | 26.38 | 5.16 |
| | 62 (16.7) | 41.22 | 39.13 | 3.12 | 39.28 | 38.11 | 3.45 | 37.28 | 36.95 | 3.82 | 35.34 | 35.34 | 4.22 | 33.37 | 33.37 | 4.67 | 31.19 | 31.19 | 5.16 |
| | 57 (13.9) | 40.48 | 40.48 | 3.12 | 38.87 | 38.87 | 3.45 | 37.16 | 37.16 | 3.82 | 35.34 | 35.34 | 4.22 | 33.38 | 33.38 | 4.67 | 31.19 | 31.19 | 5.16 |
| 1575 | 72 (22.2) | 49.51 | 26.67 | 3.23 | 47.10 | 25.77 | 3.56 | 44.56 | 24.84 | 3.92 | 41.96 | 23.89 | 4.32 | 39.08 | 22.86 | 4.76 | 35.93 | 21.74 | 5.23 |
| | 67 (19.4) | 45.43 | 34.21 | 3.21 | 43.21 | 33.29 | 3.54 | 40.87 | 32.32 | 3.90 | 38.43 | 31.32 | 4.31 | 35.82 | 30.25 | 4.75 | 32.96 | 29.06 | 5.23 |
| | 63 (17.2)†† | 42.44 | 33.06 | 3.20 | 40.35 | 32.13 | 3.53 | 38.16 | 31.15 | 3.89 | 35.87 | 30.14 | 4.30 | 33.43 | 29.06 | 4.74 | 30.78 | 27.86 | 5.23 |
| | 62 (16.7) | 41.88 | 41.27 | 3.20 | 39.96 | 39.96 | 3.53 | 38.15 | 38.15 | 3.89 | 36.24 | 36.24 | 4.30 | 34.17 | 34.17 | 4.74 | 31.87 | 31.87 | 5.23 |
| | 57 (13.9) | 41.65 | 41.65 | 3.20 | 39.96 | 39.96 | 3.53 | 38.15 | 38.15 | 3.89 | 36.24 | 36.24 | 4.30 | 34.18 | 34.18 | 4.74 | 31.87 | 31.87 | 5.23 |

| COOLING INDOOR MODEL | CAPACITY | POWER | FURNACE MODEL |
|---|---|---|---|
| *FY5BNF042 | 1.00 | 1.00 | |
| FB4CNF042 | 1.00 | 0.96 | |
| FB4CNF042 | 1.00 | 1.00 | |
| FB4CNF048 | 1.00 | 1.00 | |
| FB4CNF048 | 1.01 | 0.97 | |
| FE4AN(B,F)003 | 0.98 | 0.93 | |
| FE4AN(B,F)005 | 1.02 | 0.93 | |
| FE4ANB006 | 1.04 | 0.92 | |
| FV4BN(B,F)003 | 0.98 | 0.93 | |
| FV4BN(B,F)005 | 1.02 | 0.93 | |
| FV4BNB006 | 1.04 | 0.92 | |
| FX4CN(B,F)042 | 1.01 | 0.99 | |
| FX4CN(B,F)048 | 1.04 | 0.97 | |
| FX4DN(B,F)043 | 1.01 | 0.97 | |
| FX4DN(B,F)049 | 1.02 | 0.94 | |
| FY4ANF042 | 0.99 | 1.04 | |
| FY4ANF048 | 1.01 | 1.05 | |
| FY5BNF042 | 1.00 | 0.98 | |
| FY5BNF048 | 1.00 | 1.00 | |
| FY5BNF048 | 1.02 | 1.01 | |
| CAP**4221A** | 0.98 | 1.03 | |
| CAP**4224A** | 0.98 | 1.03 | |
| CAP**4817A** | 0.99 | 1.02 | |
| CAP**4821A** | 1.00 | 1.04 | |
| CAP**4823A** | 1.00 | 1.04 | |
| CAP**4824A** | 1.00 | 1.04 | |
| CNPF*4818A** | 0.99 | 1.03 | |
| CNPH*4221A** | 0.98 | 1.03 | |
| CNPH*4321A** | 1.01 | 1.01 | |
| CNPH*4821A** | 1.00 | 1.04 | |
| CNPV*4217A** | 0.99 | 1.03 | |
| CNPV*4221A** | 0.98 | 1.03 | |
| CNPV*4324A** | 1.01 | 1.01 | |
| CNPV*4821A** | 1.00 | 1.04 | |
| CNPV*4824A** | 1.00 | 1.04 | |
| CSPH*4212A** | 0.98 | 1.00 | |

| COOLING INDOOR MODEL | CAPACITY | POWER | FURNACE MODEL |
|---|---|---|---|
| CSPH*4812A** | 1.00 | 1.03 | |
| CNPH*4221A** | 0.98 | 0.97 | 58CV(A,X)070–12 |
| CNPH*4321A** | 1.00 | 0.96 | 58CV(A,X)070–12 |
| CNPH*4821A** | 0.99 | 0.98 | 58CV(A,X)070–12 |
| CSPH*4212A** | 0.96 | 0.95 | 58CV(A,X)070–12 |
| CSPH*4812A** | 0.99 | 0.98 | 58CV(A,X)070–12 |
| CAP**4221A** | 0.98 | 0.96 | 58CV(A,X)090–16 |
| CAP**4817A** | 0.98 | 0.94 | 58CV(A,X)090–16 |
| CNPH*4221A** | 0.98 | 0.94 | 58CV(A,X)090–16 |
| CNPH*4321A** | 1.01 | 0.97 | 58CV(A,X)090–16 |
| CNPH*4821A** | 1.00 | 0.96 | 58CV(A,X)090–16 |
| CNPV*4217A** | 0.99 | 0.97 | 58CV(A,X)090–16 |
| CNPV*4221A** | 0.99 | 0.94 | 58CV(A,X)090–16 |
| CSPH*4212A** | 0.98 | 0.94 | 58CV(A,X)090–16 |
| CSPH*4812A** | 0.99 | 0.95 | 58CV(A,X)090–16 |
| CAP**4221A** | 0.98 | 0.96 | 58CV(A,X)110–20 |
| CAP**4821A** | 1.00 | 0.96 | 58CV(A,X)110–20 |
| CNPH*4221A** | 0.98 | 0.93 | 58CV(A,X)110–20 |
| CNPH*4321A** | 1.01 | 0.97 | 58CV(A,X)110–20 |
| CNPH*4821A** | 1.00 | 0.96 | 58CV(A,X)110–20 |
| CNPV*4221A** | 0.98 | 0.93 | 58CV(A,X)110–20 |
| CNPV*4821A** | 1.00 | 0.96 | 58CV(A,X)110–20 |
| CSPH*4212A** | 0.98 | 0.94 | 58CV(A,X)110–20 |
| CSPH*4812A** | 1.00 | 0.96 | 58CV(A,X)110–20 |
| CAP**4224A** | 0.98 | 0.94 | 58CV(A,X)135–22 |
| CAP**4824A** | 1.00 | 0.95 | 58CV(A,X)135–22 |
| CNPH*4221A** | 0.98 | 0.93 | 58CV(A,X)135–22 |
| CNPH*4321A** | 1.01 | 0.93 | 58CV(A,X)135–22 |
| CNPH*4821A** | 1.00 | 0.95 | 58CV(A,X)135–22 |
| CNPV*4324A** | 1.01 | 0.93 | 58CV(A,X)135–22 |
| CNPV*4824A** | 1.00 | 0.95 | 58CV(A,X)135–22 |
| CSPH*4212A** | 0.98 | 0.93 | 58CV(A,X)135–22 |
| CSPH*4812A** | 1.00 | 0.95 | 58CV(A,X)135–22 |
| CAP**4224A** | 0.98 | 0.93 | 58CV(A,X)155–22 |
| CAP**4824A** | 1.00 | 0.95 | 58CV(A,X)155–22 |
| CNPH*4221A** | 0.98 | 0.93 | 58CV(A,X)155–22 |

| COOLING INDOOR MODEL | CAPACITY | POWER | FURNACE MODEL |
|---|---|---|---|
| CNPH*4321A** | 1.01 | 0.93 | 58CV(A,X)155–22 |
| CNPH*4821A** | 1.00 | 0.94 | 58CV(A,X)155–22 |
| CNPV*4324A** | 1.01 | 0.93 | 58CV(A,X)155–22 |
| CNPV*4824A** | 1.00 | 0.95 | 58CV(A,X)155–22 |
| CSPH*4212A** | 0.98 | 0.93 | 58CV(A,X)155–22 |
| CSPH*4812A** | 1.00 | 0.95 | 58CV(A,X)155–22 |
| CNPH*4821A** | 0.99 | 0.99 | 58HDV060––12 |
| CNPV*4217A** | 0.98 | 0.98 | 58HDV060––12 |
| CNPV*4221A** | 0.98 | 0.98 | 58HDV060––12 |
| CNPV*4821A** | 1.00 | 0.98 | 58HDV060––12 |
| CSPH*4212A** | 0.99 | 0.99 | 58HDV060––12 |
| CSPH*4812A** | 1.00 | 1.00 | 58HDV060––12 |
| CAP**4823A** | 1.00 | 0.98 | 58HDV080––20 |
| CNPH*4221A** | 0.98 | 0.98 | 58HDV080––20 |
| CNPH*4321A** | 1.02 | 0.98 | 58HDV080––20 |
| CNPH*4821A** | 1.00 | 0.98 | 58HDV080––20 |
| CNPV*4221A** | 0.99 | 0.97 | 58HDV080––20 |
| CNPV*4324A** | 1.02 | 0.98 | 58HDV080––20 |
| CNPV*4821A** | 1.01 | 0.97 | 58HDV080––20 |
| CNPV*4824A** | 1.01 | 0.97 | 58HDV080––20 |
| CSPH*4212A** | 1.00 | 0.98 | 58HDV080––20 |
| CSPH*4812A** | 1.01 | 0.99 | 58HDV080––20 |
| CAP**4224A** | 0.98 | 0.96 | 58HDV100––20 |
| CAP**4824A** | 1.00 | 0.98 | 58HDV100––20 |
| CNPH*4221A** | 0.98 | 0.96 | 58HDV100––20 |
| CNPH*4321A** | 1.01 | 0.97 | 58HDV100––20 |
| CNPH*4821A** | 1.00 | 0.96 | 58HDV100––20 |
| CNPV*4324A** | 1.01 | 0.93 | 58HDV100––20 |
| CNPV*4324A** | 1.02 | 0.98 | 58HDV100––20 |
| CNPV*4824A** | 1.00 | 0.96 | 58HDV100––20 |
| CNPV*4824A** | 1.00 | 0.96 | 58HDV100––20 |
| CSPH*4212A** | 1.00 | 0.98 | 58HDV100––20 |
| CSPH*4812A** | 1.00 | 0.98 | 58HDV100––20 |
| CAP**4817A** | 1.01 | 0.97 | 58ME(B,C)060–12 |
| CNPH*4221A** | 0.98 | 0.98 | 58ME(B,C)060–12 |
| CNPH*4321A** | 1.01 | 0.97 | 58ME(B,C)060–12 |

# DETAILED COOLING CAPACITIES# CONTINUED

**25HCB342A30 Outdoor Section With FY4ANF042 Indoor Section**

| COOLING INDOOR MODEL | CAPACITY | POWER | FURNACE MODEL |
|---|---|---|---|
| CNPH*4821A** | 1.00 | 0.96 | 58ME(B,C)060–12 |
| CNPV*4217A** | 0.99 | 0.99 | 58ME(B,C)060–12 |
| CSPH*4212A** | 1.00 | 0.96 | 58ME(B,C)060–12 |
| CSPH*4812A** | 1.01 | 0.97 | 58ME(B,C)060–12 |
| CNPH*4221A** | 0.98 | 0.98 | 58ME(B,C)080–12 |
| CNPH*4321A** | 1.01 | 0.97 | 58ME(B,C)080–12 |
| CNPH*4821A** | 1.00 | 0.96 | 58ME(B,C)080–12 |
| CNPV*4217A** | 0.99 | 0.99 | 58ME(B,C)080–12 |
| CSPH*4212A** | 1.00 | 0.96 | 58ME(B,C)080–12 |
| CSPH*4812A** | 1.01 | 0.97 | 58ME(B,C)080–12 |
| CNPH*4221A** | 0.98 | 0.98 | 58ME(B,C)080–16 |
| CNPH*4321A** | 1.01 | 0.97 | 58ME(B,C)080–16 |
| CNPH*4821A** | 1.00 | 0.96 | 58ME(B,C)080–16 |
| CNPV*4217A** | 0.99 | 0.99 | 58ME(B,C)080–16 |
| CSPH*4212A** | 1.00 | 0.96 | 58ME(B,C)080–16 |
| CSPH*4812A** | 1.00 | 0.96 | 58ME(B,C)080–16 |
| CAP**4221A** | 0.99 | 0.94 | 58ME(B,C)100–20 |
| CAP**4821A** | 1.00 | 0.96 | 58ME(B,C)100–20 |
| CNPH*4221A** | 0.98 | 0.98 | 58ME(B,C)100–20 |
| CNPH*4321A** | 1.02 | 0.94 | 58ME(B,C)100–20 |
| CNPH*4821A** | 1.00 | 0.96 | 58ME(B,C)100–20 |
| CNPV*4221A** | 0.98 | 0.93 | 58ME(B,C)100–20 |
| CNPV*4821A** | 1.00 | 0.96 | 58ME(B,C)100–20 |
| CSPH*4212A** | 1.00 | 0.96 | 58ME(B,C)100–20 |
| CSPH*4812A** | 1.01 | 0.97 | 58ME(B,C)100–20 |
| CAP**4224A** | 0.99 | 0.94 | 58ME(B,C)120–20 |
| CAP**4824A** | 1.00 | 0.96 | 58ME(B,C)120–20 |
| CNPH*4221A** | 0.99 | 0.94 | 58ME(B,C)120–20 |
| CNPH*4321A** | 1.02 | 0.94 | 58ME(B,C)120–20 |
| CNPH*4821A** | 1.01 | 0.97 | 58ME(B,C)120–20 |
| CNPV*4324A** | 1.02 | 0.94 | 58ME(B,C)120–20 |
| CNPV*4824A** | 1.01 | 0.97 | 58ME(B,C)120–20 |
| CSPH*4212A** | 1.01 | 0.97 | 58ME(B,C)120–20 |
| CSPH*4812A** | 1.01 | 0.97 | 58ME(B,C)120–20 |
| CAP**4817A** | 1.01 | 0.97 | 58MEB040–12 |
| CNPH*4221A** | 0.99 | 0.99 | 58MEB040–12 |
| CNPH*4321A** | 1.02 | 0.98 | 58MEB040–12 |
| CNPH*4821A** | 1.00 | 0.96 | 58MEB040–12 |
| CNPV*4217A** | 0.99 | 0.99 | 58MEB040–12 |
| CSPH*4212A** | 1.00 | 0.96 | 58MEB040–12 |
| CSPH*4812A** | 1.01 | 0.97 | 58MEB040–12 |
| CAP**4224A** | 0.96 | 0.96 | 58MV(B,C)040–14 |
| CAP**4824A** | 0.99 | 0.98 | 58MV(B,C)040–14 |
| CNPH*4221A** | 0.96 | 0.95 | 58MV(B,C)040–14 |
| CNPH*4821A** | 0.99 | 0.97 | 58MV(B,C)040–14 |
| CNPV*4824A** | 0.99 | 0.97 | 58MV(B,C)040–14 |
| CSPH*4212A** | 0.96 | 0.95 | 58MV(B,C)040–14 |
| CSPH*4812A** | 0.99 | 0.97 | 58MV(B,C)040–14 |
| CAP**4817A** | 0.98 | 0.95 | 58MV(B,C)060–14 |
| CNPH*4221A** | 0.96 | 0.94 | 58MV(B,C)060–14 |
| CNPH*4321A** | 1.01 | 0.97 | 58MV(B,C)060–14 |
| CNPH*4821A** | 0.99 | 0.96 | 58MV(B,C)060–14 |
| CNPV*4217A** | 0.99 | 0.99 | 58MV(B,C)060–14 |
| CSPH*4212A** | 0.98 | 0.95 | 58MV(B,C)060–14 |
| CSPH*4812A** | 0.99 | 0.96 | 58MV(B,C)060–14 |
| CAP**4221A** | 0.96 | 0.97 | 58MV(B,C)080–14 |

| COOLING INDOOR MODEL | CAPACITY | POWER | FURNACE MODEL |
|---|---|---|---|
| CAP**4821A** | 0.99 | 0.95 | 58MV(B,C)080–14 |
| CNPH*4221A** | 0.96 | 0.95 | 58MV(B,C)080–14 |
| CNPH*4321A** | 1.00 | 0.96 | 58MV(B,C)080–14 |
| CNPH*4821A** | 0.99 | 0.98 | 58MV(B,C)080–14 |
| CNPV*4221A** | 0.96 | 0.95 | 58MV(B,C)080–14 |
| CNPV*4821A** | 0.99 | 0.98 | 58MV(B,C)080–14 |
| CSPH*4212A** | 0.96 | 0.95 | 58MV(B,C)080–14 |
| CSPH*4812A** | 0.99 | 0.98 | 58MV(B,C)080–14 |
| CAP**4221A** | 0.98 | 0.98 | 58MV(B,C)080–20 |
| CAP**4821A** | 0.99 | 0.97 | 58MV(B,C)080–20 |
| CNPH*4221A** | 0.98 | 0.96 | 58MV(B,C)080–20 |
| CNPH*4321A** | 1.01 | 0.97 | 58MV(B,C)080–20 |
| CNPH*4821A** | 0.99 | 0.97 | 58MV(B,C)080–20 |
| CNPV*4221A** | 0.98 | 0.96 | 58MV(B,C)080–20 |
| CNPV*4821A** | 0.99 | 0.97 | 58MV(B,C)080–20 |
| CSPH*4212A** | 0.98 | 0.96 | 58MV(B,C)080–20 |
| CSPH*4812A** | 0.99 | 0.96 | 58MV(B,C)080–20 |
| CAP**4221A** | 0.98 | 0.96 | 58MV(B,C)100–20 |
| CAP**4821A** | 0.99 | 0.96 | 58MV(B,C)100–20 |
| CNPH*4221A** | 0.98 | 0.94 | 58MV(B,C)100–20 |
| CNPH*4321A** | 1.00 | 0.96 | 58MV(B,C)100–20 |
| CNPH*4821A** | 1.00 | 0.96 | 58MV(B,C)100–20 |
| CNPV*4221A** | 0.98 | 0.94 | 58MV(B,C)100–20 |
| CNPV*4821A** | 0.99 | 0.95 | 58MV(B,C)100–20 |
| CSPH*4212A** | 0.98 | 0.95 | 58MV(B,C)100–20 |
| CSPH*4812A** | 0.99 | 0.96 | 58MV(B,C)100–20 |
| CAP**4224A** | 0.98 | 0.96 | 58MV(B,C)120–20 |
| CAP**4824A** | 0.99 | 0.95 | 58MV(B,C)120–20 |
| CNPH*4221A** | 0.98 | 0.94 | 58MV(B,C)120–20 |
| CNPH*4321A** | 1.01 | 0.97 | 58MV(B,C)120–20 |
| CNPH*4821A** | 0.99 | 0.95 | 58MV(B,C)120–20 |
| CNPV*4324A** | 1.01 | 0.97 | 58MV(B,C)120–20 |
| CNPV*4824A** | 0.99 | 0.95 | 58MV(B,C)120–20 |
| CSPH*4212A** | 0.98 | 0.94 | 58MV(B,C)120–20 |
| CSPH*4812A** | 0.99 | 0.95 | 58MV(B,C)120–20 |
| CNPH*4321A** | 1.00 | 0.96 | 58MVB040–14 |
| CNPV*4324A** | 1.00 | 0.96 | 58MVB040–14 |
| CAP**4817A** | 1.00 | 1.00 | 58PH*070–16 |
| CNPH*4221A** | 0.98 | 0.99 | 58PH*070–16 |
| CNPH*4321A** | 1.01 | 0.99 | 58PH*070–16 |
| CNPH*4821A** | 1.00 | 1.00 | 58PH*070–16 |
| CNPV*4217A** | 0.98 | 1.02 | 58PH*070–16 |
| CSPH*4212A** | 1.00 | 1.00 | 58PH*070–16 |
| CSPH*4812A** | 1.00 | 1.00 | 58PH*070–16 |
| CAP**4221A** | 0.98 | 0.96 | 58PH*090–16 |
| CAP**4821A** | 1.00 | 0.96 | 58PH*090–16 |
| CNPH*4221A** | 0.98 | 0.96 | 58PH*090–16 |
| CNPH*4321A** | 1.01 | 0.97 | 58PH*090–16 |
| CNPH*4821A** | 1.00 | 0.96 | 58PH*090–16 |
| CNPV*4221A** | 0.98 | 0.96 | 58PH*090–16 |
| CNPV*4821A** | 1.00 | 0.96 | 58PH*090–16 |
| CSPH*4212A** | 1.00 | 0.96 | 58PH*090–16 |
| CSPH*4812A** | 1.00 | 0.96 | 58PH*090–16 |
| CAP**4221A** | 0.99 | 0.94 | 58PH*110–20 |
| CAP**4821A** | 1.00 | 0.96 | 58PH*110–20 |
| CNPH*4221A** | 0.98 | 0.93 | 58PH*110–20 |

| COOLING INDOOR MODEL | CAPACITY | POWER | FURNACE MODEL |
|---|---|---|---|
| CNPH*4321A** | 1.01 | 0.93 | 58PH*110–20 |
| CNPH*4821A** | 1.00 | 0.96 | 58PH*110–20 |
| CNPV*4221A** | 0.98 | 0.96 | 58PH*110–20 |
| CNPV*4821A** | 1.00 | 0.96 | 58PH*110–20 |
| CSPH*4212A** | 1.00 | 0.96 | 58PH*110–20 |
| CSPH*4812A** | 1.01 | 0.97 | 58PH*110–20 |
| CAP**4224A** | 0.99 | 0.94 | 58PH*135–20 |
| CAP**4824A** | 1.00 | 0.96 | 58PH*135–20 |
| CNPH*4221A** | 0.98 | 0.96 | 58PH*135–20 |
| CNPH*4321A** | 1.01 | 0.97 | 58PH*135–20 |
| CNPH*4821A** | 1.00 | 0.96 | 58PH*135–20 |
| CNPV*4324A** | 1.02 | 0.94 | 58PH*135–20 |
| CNPV*4824A** | 1.00 | 0.96 | 58PH*135–20 |
| CSPH*4212A** | 1.00 | 0.96 | 58PH*135–20 |
| CSPH*4812A** | 1.00 | 0.96 | 58PH*135–20 |
| CAP**4221A** | 0.96 | 0.95 | 58VLR120–20 |
| CAP**4821A** | 0.99 | 0.94 | 58VLR120–20 |
| CNPH*4221A** | 0.98 | 0.96 | 58VLR120–20 |
| CNPH*4821A** | 0.99 | 0.94 | 58VLR120–20 |
| CNPV*4221A** | 0.98 | 0.96 | 58VLR120–20 |
| CNPV*4321A** | 1.00 | 0.96 | 58VLR120–20 |
| CNPV*4821A** | 0.99 | 0.94 | 58VLR120–20 |
| CSPH*4212A** | 0.99 | 0.94 | 58VLR120–20 |
| CSPH*4812A** | 1.00 | 0.96 | 58VLR120–20 |
| CAP**4221A** | 0.96 | 0.95 | 58VMR120–20 |
| CAP**4821A** | 0.99 | 0.97 | 58VMR120–20 |
| CNPH*4221A** | 0.96 | 0.95 | 58VMR120–20 |
| CNPH*4821A** | 0.99 | 0.94 | 58VMR120–20 |
| CNPV*4221A** | 0.96 | 0.95 | 58VMR120–20 |
| CNPV*4321A** | 1.00 | 0.96 | 58VMR120–20 |
| CNPV*4821A** | 0.99 | 0.94 | 58VMR120–20 |
| CSPH*4212A** | 0.99 | 0.94 | 58VMR120–20 |
| CSPH*4812A** | 1.00 | 0.96 | 58VMR120–20 |
| CAP**4221A** | 0.98 | 0.98 | OVLAAB048112 |
| CAP**4821A** | 1.00 | 1.00 | OVLAAB048112 |
| CNPH*4221A** | 0.98 | 0.98 | OVLAAB048112 |
| CNPH*4321A** | 1.01 | 0.99 | OVLAAB048112 |
| CNPH*4821A** | 1.00 | 0.98 | OVLAAB048112 |
| CNPV*4221A** | 0.98 | 0.98 | OVLAAB048112 |
| CNPV*4821A** | 1.00 | 0.98 | OVLAAB048112 |
| CSPH*4212A** | 1.00 | 0.98 | OVLAAB048112 |
| CSPH*4812A** | 1.00 | 0.98 | OVLAAB048112 |
| CNPH*4221A** | 1.00 | 0.98 | OVLAAB060154 |
| CNPH*4321A** | 1.02 | 0.98 | OVLAAB060154 |
| CNPH*4821A** | 1.01 | 0.97 | OVLAAB060154 |
| CSPH*4212A** | 1.02 | 0.98 | OVLAAB060154 |
| CSPH*4812A** | 1.02 | 0.98 | OVLAAB060154 |
| CAP**4817A** | 1.00 | 0.98 | OVMAAB042112 |
| CNPH*4221A** | 0.98 | 0.98 | OVMAAB042112 |
| CNPH*4321A** | 1.00 | 0.96 | OVMAAB042112 |
| CNPH*4821A** | 0.99 | 0.97 | OVMAAB042112 |
| CNPV*4217A** | 0.98 | 0.98 | OVMAAB042112 |
| CSPH*4212A** | 1.00 | 0.98 | OVMAAB042112 |
| CSPH*4812A** | 1.00 | 0.98 | OVMAAB042112 |
| CAP**4221A** | 0.96 | 0.96 | 59*N*A060V17**14 |
| CAP**4817A** | 0.99 | 0.96 | 59*N*A060V17**14 |

# DETAILED COOLING CAPACITIES# CONTINUED

**25HCB342A30 Outdoor Section With FY4ANF042 Indoor Section**

| COOLING INDOOR MODEL | CAPACITY | POWER | FURNACE MODEL |
|---|---|---|---|
| CAP**4821A** | 0.98 | 0.95 | 59*N*A060V17**14 |
| CNPH*4221A** | 0.96 | 0.96 | 59*N*A060V17**14 |
| CNPH*4321A** | 0.99 | 0.94 | 59*N*A060V17**14 |
| CNPH*4821A** | 0.98 | 0.95 | 59*N*A060V17**14 |
| CNPV*4217A** | 0.96 | 0.95 | 59*N*A060V17**14 |
| CNPV*4221A** | 0.96 | 0.96 | 59*N*A060V17**14 |
| CNPV*4821A** | 0.98 | 0.95 | 59*N*A060V17**14 |
| CSPH*4212A** | 0.99 | 0.96 | 59*N*A060V17**14 |
| CSPH*4812A** | 0.99 | 0.96 | 59*N*A060V17**14 |
| CAP**4221A** | 0.96 | 0.94 | 59*N*A080V17**14 |
| CAP**4817A** | 0.99 | 0.94 | 59*N*A080V17**14 |
| CAP**4821A** | 0.98 | 0.94 | 59*N*A080V17**14 |
| CNPH*4221A** | 0.96 | 0.95 | 59*N*A080V17**14 |
| CNPH*4321A** | 1.00 | 0.94 | 59*N*A080V17**14 |
| CNPH*4821A** | 0.99 | 0.94 | 59*N*A080V17**14 |
| CNPV*4217A** | 0.98 | 0.95 | 59*N*A080V17**14 |
| CNPV*4221A** | 0.96 | 0.95 | 59*N*A080V17**14 |
| CNPV*4821A** | 0.99 | 0.94 | 59*N*A080V17**14 |
| CSPH*4212A** | 0.99 | 0.94 | 59*N*A080V17**14 |
| CSPH*4812A** | 0.99 | 0.94 | 59*N*A080V17**14 |
| CAP**4221A** | 0.96 | 0.93 | 59*N*A100V21**20 |
| CAP**4224A** | 0.96 | 0.93 | 59*N*A100V21**20 |
| CAP**4821A** | 0.99 | 0.94 | 59*N*A100V21**20 |
| CAP**4823A** | 0.99 | 0.94 | 59*N*A100V21**20 |
| CAP**4824A** | 0.99 | 0.94 | 59*N*A100V21**20 |
| CNPH*4221A** | 0.96 | 0.94 | 59*N*A100V21**20 |
| CNPH*4321A** | 1.00 | 0.93 | 59*N*A100V21**20 |
| CNPH*4821A** | 0.99 | 0.93 | 59*N*A100V21**20 |
| CNPV*4221A** | 0.96 | 0.94 | 59*N*A100V21**20 |
| CNPV*4324A** | 1.00 | 0.93 | 59*N*A100V21**20 |
| CNPV*4821A** | 0.99 | 0.93 | 59*N*A100V21**20 |
| CNPV*4824A** | 0.99 | 0.93 | 59*N*A100V21**20 |
| CSPH*4212A** | 0.99 | 0.93 | 59*N*A100V21**20 |
| CSPH*4812A** | 1.00 | 0.94 | 59*N*A100V21**20 |
| CAP**4224A** | 0.96 | 0.92 | 59*N*A120V24**22 |
| CAP**4823A** | 0.99 | 0.93 | 59*N*A120V24**22 |
| CAP**4824A** | 0.99 | 0.92 | 59*N*A120V24**22 |
| CNPH*4221A** | 0.96 | 0.93 | 59*N*A120V24**22 |
| CNPH*4321A** | 1.00 | 0.92 | 59*N*A120V24**22 |
| CNPH*4821A** | 0.99 | 0.92 | 59*N*A120V24**22 |
| CNPV*4324A** | 1.00 | 0.92 | 59*N*A120V24**22 |
| CNPV*4824A** | 0.99 | 0.92 | 59*N*A120V24**22 |
| CSPH*4212A** | 0.99 | 0.92 | 59*N*A120V24**22 |
| CSPH*4812A** | 1.00 | 0.93 | 59*N*A120V24**22 |
| CAP**4221A** | 0.96 | 0.96 | 59*P5A060E17**14 |
| CAP**4817A** | 1.00 | 0.97 | 59*P5A060E17**14 |
| CAP**4821A** | 0.99 | 0.97 | 59*P5A060E17**14 |
| CNPH*4221A** | 0.96 | 0.96 | 59*P5A060E17**14 |
| CNPH*4321A** | 1.00 | 0.96 | 59*P5A060E17**14 |
| CNPH*4821A** | 0.99 | 0.96 | 59*P5A060E17**14 |
| CNPV*4217A** | 0.98 | 0.96 | 59*P5A060E17**14 |
| CNPV*4221A** | 0.96 | 0.96 | 59*P5A060E17**14 |
| CNPV*4821A** | 0.99 | 0.96 | 59*P5A060E17**14 |
| CSPH*4212A** | 0.99 | 0.96 | 59*P5A060E17**14 |

| COOLING INDOOR MODEL | CAPACITY | POWER | FURNACE MODEL |
|---|---|---|---|
| CSPH*4812A** | 1.00 | 0.96 | 59*P5A060E17**14 |
| CAP**4221A** | 0.98 | 0.96 | 59*P5A080E17**16 |
| CAP**4817A** | 1.00 | 0.96 | 59*P5A080E17**16 |
| CAP**4821A** | 0.99 | 0.95 | 59*P5A080E17**16 |
| CNPH*4221A** | 0.98 | 0.96 | 59*P5A080E17**16 |
| CNPH*4321A** | 1.01 | 0.96 | 59*P5A080E17**16 |
| CNPH*4821A** | 1.00 | 0.96 | 59*P5A080E17**16 |
| CNPV*4217A** | 0.99 | 0.97 | 59*P5A080E17**16 |
| CNPV*4221A** | 0.98 | 0.96 | 59*P5A080E17**16 |
| CNPV*4821A** | 1.00 | 0.96 | 59*P5A080E17**16 |
| CSPH*4212A** | 1.00 | 0.96 | 59*P5A080E17**16 |
| CSPH*4812A** | 1.00 | 0.96 | 59*P5A080E17**16 |
| CAP**4221A** | 0.98 | 0.95 | 59*P5A100E21**16 |
| CAP**4224A** | 0.98 | 0.95 | 59*P5A100E21**16 |
| CAP**4821A** | 0.99 | 0.94 | 59*P5A100E21**16 |
| CAP**4823A** | 0.99 | 0.94 | 59*P5A100E21**16 |
| CAP**4824A** | 0.99 | 0.94 | 59*P5A100E21**16 |
| CNPH*4221A** | 0.96 | 0.94 | 59*P5A100E21**16 |
| CNPH*4321A** | 1.00 | 0.94 | 59*P5A100E21**16 |
| CNPH*4821A** | 0.99 | 0.94 | 59*P5A100E21**16 |
| CNPV*4221A** | 0.96 | 0.94 | 59*P5A100E21**16 |
| CNPV*4324A** | 1.01 | 0.94 | 59*P5A100E21**16 |
| CNPV*4821A** | 0.99 | 0.94 | 59*P5A100E21**16 |
| CNPV*4824A** | 0.99 | 0.94 | 59*P5A100E21**16 |
| CSPH*4212A** | 0.99 | 0.94 | 59*P5A100E21**16 |
| CSPH*4812A** | 1.00 | 0.95 | 59*P5A100E21**16 |
| CAP**4224A** | 0.99 | 0.94 | 59*P5A120E24**22 |
| CAP**4823A** | 1.00 | 0.94 | 59*P5A120E24**22 |
| CAP**4824A** | 1.00 | 0.94 | 59*P5A120E24**22 |
| CNPH*4221A** | 0.98 | 0.94 | 59*P5A120E24**22 |
| CNPH*4321A** | 1.02 | 0.94 | 59*P5A120E24**22 |
| CNPH*4821A** | 1.00 | 0.93 | 59*P5A120E24**22 |
| CNPV*4324A** | 1.02 | 0.94 | 59*P5A120E24**22 |
| CNPV*4824A** | 1.00 | 0.93 | 59*P5A120E24**22 |
| CSPH*4212A** | 1.00 | 0.94 | 59*P5A120E24**22 |
| CSPH*4812A** | 1.01 | 0.94 | 59*P5A120E24**22 |

See note on pg. 50

# DETAILED COOLING CAPACITIES# CONTINUED

| EVAPORATOR AIR | | CONDENSER ENTERING AIR TEMPERATURES °F (°C) | | | | | | | | | | | | | | | | | |
|---|---|---|---|---|---|---|---|---|---|---|---|---|---|---|---|---|---|---|---|
| | | 75 (23.9) | | | 85 (29.4) | | | 95 (35) | | | 105 (40.6) | | | 115 (46.1) | | | 125 (51.7) | | |
| CFM | EWB °F (°C) | Capacity MBtuh | | Total Sys. KW** | Capacity MBtuh | | Total Sys. KW** | Capacity MBtuh | | Total Sys. KW** | Capacity MBtuh | | Total Sys. KW** | Capacity MBtuh | | Total Sys. KW** | Capacity MBtuh | | Total Sys. KW** |
| | | Total | Sens‡ | | Total | Sens‡ | | Total | Sens‡ | | Total | Sens‡ | | Total | Sens‡ | | Total | Sens‡ | |
| 25HCB348A30 Outdoor Section With FY4ANF048 Indoor Section | | | | | | | | | | | | | | | | | | | |
| 1400 | 72 (22.2) | 55.40 | 28.31 | 3.28 | 52.85 | 27.32 | 3.64 | 50.16 | 26.29 | 4.04 | 47.32 | 25.21 | 4.48 | 44.24 | 24.07 | 4.96 | 40.83 | 22.81 | 5.48 |
| | 67 (19.4) | 50.66 | 35.30 | 3.27 | 48.32 | 34.30 | 3.63 | 45.85 | 33.24 | 4.03 | 43.23 | 32.13 | 4.47 | 40.39 | 30.96 | 4.95 | 37.28 | 29.68 | 5.48 |
| | 63 (17.2)†† | 47.16 | 34.17 | 3.27 | 44.97 | 33.16 | 3.63 | 42.65 | 32.10 | 4.03 | 40.18 | 30.98 | 4.47 | 37.54 | 29.81 | 4.95 | 34.64 | 28.52 | 5.47 |
| | 62 (16.7) | 46.25 | 42.22 | 3.27 | 44.12 | 41.16 | 3.63 | 41.87 | 40.03 | 4.03 | 39.52 | 38.79 | 4.47 | 37.13 | 37.13 | 4.95 | 34.77 | 34.77 | 5.47 |
| | 57 (13.9) | 44.75 | 44.75 | 3.27 | 43.04 | 43.04 | 3.63 | 41.21 | 41.21 | 4.03 | 39.26 | 39.26 | 4.47 | 37.13 | 37.13 | 4.95 | 34.77 | 34.77 | 5.47 |
| 1600 | 72 (22.2) | 56.26 | 29.55 | 3.36 | 53.63 | 28.56 | 3.72 | 50.81 | 27.50 | 4.12 | 47.87 | 26.42 | 4.56 | 44.68 | 25.26 | 5.04 | 41.16 | 23.99 | 5.56 |
| | 67 (19.4) | 51.50 | 37.44 | 3.36 | 49.07 | 36.42 | 3.72 | 46.50 | 35.35 | 4.12 | 43.77 | 34.22 | 4.56 | 40.83 | 33.02 | 5.04 | 37.62 | 31.70 | 5.56 |
| | 63 (17.2)†† | 47.98 | 36.18 | 3.35 | 45.70 | 35.15 | 3.71 | 43.28 | 34.07 | 4.11 | 40.73 | 32.94 | 4.55 | 37.99 | 31.73 | 5.03 | 35.00 | 30.41 | 5.56 |
| | 62 (16.7) | 47.16 | 45.12 | 3.35 | 44.97 | 43.96 | 3.71 | 42.69 | 42.69 | 4.11 | 40.59 | 40.59 | 4.55 | 38.33 | 38.33 | 5.03 | 35.82 | 35.82 | 5.56 |
| | 57 (13.9) | 46.44 | 46.44 | 3.35 | 44.61 | 44.61 | 3.71 | 42.67 | 42.67 | 4.11 | 40.59 | 40.59 | 4.55 | 38.34 | 38.34 | 5.03 | 35.83 | 35.83 | 5.56 |
| 1800 | 72 (22.2) | 56.87 | 30.73 | 3.45 | 54.16 | 29.72 | 3.81 | 51.25 | 28.65 | 4.20 | 48.26 | 27.57 | 4.64 | 44.97 | 26.39 | 5.12 | 41.36 | 25.11 | 5.64 |
| | 67 (19.4) | 52.10 | 39.48 | 3.44 | 49.59 | 38.45 | 3.80 | 46.94 | 37.35 | 4.20 | 44.13 | 36.19 | 4.64 | 41.13 | 34.96 | 5.12 | 37.84 | 33.60 | 5.64 |
| | 63 (17.2)†† | 48.58 | 38.09 | 3.44 | 46.22 | 37.05 | 3.80 | 43.74 | 35.94 | 4.20 | 41.11 | 34.78 | 4.64 | 38.30 | 33.54 | 5.12 | 35.25 | 32.17 | 5.64 |
| | 62 (16.7) | 47.96 | 47.60 | 3.44 | 45.90 | 45.90 | 3.80 | 43.85 | 43.85 | 4.20 | 41.66 | 41.66 | 4.64 | 39.30 | 39.30 | 5.12 | 36.65 | 36.65 | 5.64 |
| | 57 (13.9) | 47.82 | 47.82 | 3.44 | 45.90 | 45.90 | 3.80 | 43.86 | 43.86 | 4.20 | 41.67 | 41.67 | 4.64 | 39.30 | 39.30 | 5.12 | 36.65 | 36.65 | 5.64 |

| COOLING INDOOR MODEL | CAPACITY | POWER | FURNACE MODEL |
|---|---|---|---|
| *FY5BNF048 | 1.00 | 1.00 | |
| FB4CNF048 | 0.99 | 0.95 | |
| FB4CNF048 | 0.99 | 0.99 | |
| FB4CNF060 | 1.00 | 1.00 | |
| FB4CNF060 | 1.01 | 0.91 | |
| FE4AN(B,F)005 | 1.01 | 0.91 | |
| FE4ANB006 | 1.03 | 0.91 | |
| FV4BN(B,F)005 | 1.01 | 0.91 | |
| FV4BNB006 | 1.03 | 0.91 | |
| FX4CN(B,F)048 | 1.02 | 0.96 | |
| FX4CN(B,F)060 | 1.03 | 0.95 | |
| FX4DN(B,F)049 | 1.02 | 0.92 | |
| FX4DN(B,F)061 | 1.03 | 0.91 | |
| FY4ANB060 | 1.02 | 1.02 | |
| FY4ANF048 | 1.00 | 1.02 | |
| FY5BNB060 | 1.02 | 0.98 | |
| FY5BNF048 | 1.01 | 0.93 | |
| CAP**4817A** | 0.97 | 0.99 | |
| CAP**4821A** | 0.99 | 1.01 | |
| CAP**4823A** | 0.99 | 1.01 | |
| CAP**4824A** | 0.99 | 1.01 | |
| CAP**6021A** | 1.01 | 1.03 | |
| CAP**6024A** | 1.01 | 1.03 | |
| CAP**6025A** | 1.01 | 1.03 | |
| CNPF*4818A** | 0.97 | 0.99 | |
| CNPH*4821A** | 0.99 | 1.01 | |
| CNPH*6024A** | 1.01 | 1.03 | |
| CNPV*4821A** | 0.99 | 1.01 | |
| CNPV*4824A** | 0.99 | 1.01 | |
| CNPV*6024A** | 1.01 | 1.03 | |
| CSPH*4812A** | 0.99 | 1.01 | |
| CSPH*6012A** | 1.01 | 1.03 | |
| CAP**4817A** | 0.97 | 0.93 | 58CV(A,X)090–16 |
| CNPH*4821A** | 0.98 | 0.94 | 58CV(A,X)090–16 |
| CNPH*6024A** | 1.00 | 0.94 | 58CV(A,X)090–16 |
| CNPV*4821A** | 0.98 | 0.94 | 58CV(A,X)090–16 |

| COOLING INDOOR MODEL | CAPACITY | POWER | FURNACE MODEL |
|---|---|---|---|
| CSPH*4812A** | 0.98 | 0.94 | 58CV(A,X)090–16 |
| CSPH*6012A** | 1.00 | 0.94 | 58CV(A,X)090–16 |
| CAP**4821A** | 0.98 | 0.94 | 58CV(A,X)110–20 |
| CAP**6021A** | 1.00 | 0.94 | 58CV(A,X)110–20 |
| CNPH*4821A** | 0.98 | 0.94 | 58CV(A,X)110–20 |
| CNPH*6024A** | 1.00 | 0.94 | 58CV(A,X)110–20 |
| CNPV*4821A** | 0.98 | 0.94 | 58CV(A,X)110–20 |
| CSPH*4812A** | 0.98 | 0.94 | 58CV(A,X)110–20 |
| CSPH*6012A** | 1.00 | 0.94 | 58CV(A,X)110–20 |
| CAP**4824A** | 0.98 | 0.92 | 58CV(A,X)135–22 |
| CAP**6024A** | 1.01 | 0.95 | 58CV(A,X)135–22 |
| CNPH*4821A** | 0.99 | 0.93 | 58CV(A,X)135–22 |
| CNPH*6024A** | 1.00 | 0.92 | 58CV(A,X)135–22 |
| CNPV*4824A** | 0.98 | 0.92 | 58CV(A,X)135–22 |
| CNPV*6024A** | 1.00 | 0.92 | 58CV(A,X)135–22 |
| CSPH*4812A** | 0.98 | 0.92 | 58CV(A,X)135–22 |
| CSPH*6012A** | 1.00 | 0.92 | 58CV(A,X)135–22 |
| CAP**4824A** | 0.99 | 0.95 | 58CV(A,X)155–22 |
| CAP**6024A** | 1.01 | 0.93 | 58CV(A,X)155–22 |
| CNPH*4821A** | 0.99 | 0.93 | 58CV(A,X)155–22 |
| CNPH*6024A** | 1.01 | 0.93 | 58CV(A,X)155–22 |
| CNPV*4824A** | 0.99 | 0.95 | 58CV(A,X)155–22 |
| CNPV*6024A** | 1.01 | 0.93 | 58CV(A,X)155–22 |
| CSPH*4812A** | 0.98 | 0.92 | 58CV(A,X)155–22 |
| CSPH*6012A** | 1.00 | 0.92 | 58CV(A,X)155–22 |
| CAP**4823A** | 0.98 | 0.94 | 58HDV080––20 |
| CAP**6025A** | 1.01 | 0.93 | 58HDV080––20 |
| CNPH*4821A** | 0.98 | 0.96 | 58HDV080––20 |
| CNPH*6024A** | 1.00 | 0.96 | 58HDV080––20 |
| CNPV*4821A** | 0.99 | 0.91 | 58HDV080––20 |
| CNPV*4824A** | 0.99 | 0.91 | 58HDV080––20 |
| CNPV*6024A** | 1.00 | 0.88 | 58HDV080––20 |
| CNPV*6124A** | 1.01 | 0.89 | 58HDV080––20 |
| CSPH*4812A** | 0.99 | 0.97 | 58HDV080––20 |
| CSPH*6012A** | 1.01 | 0.97 | 58HDV080––20 |
| CAP**4824A** | 0.98 | 0.96 | 58HDV100––20 |

| COOLING INDOOR MODEL | CAPACITY | POWER | FURNACE MODEL |
|---|---|---|---|
| CAP**6024A** | 1.00 | 0.96 | 58HDV100––20 |
| CAP**6025A** | 1.00 | 0.96 | 58HDV100––20 |
| CNPH*4821A** | 0.98 | 0.94 | 58HDV100––20 |
| CNPH*6024A** | 1.00 | 0.96 | 58HDV100––20 |
| CNPV*4824A** | 0.98 | 0.94 | 58HDV100––20 |
| CNPV*4824A** | 0.98 | 0.86 | 58HDV100––20 |
| CNPV*6024A** | 1.00 | 0.96 | 58HDV100––20 |
| CNPV*6024A** | 1.00 | 0.88 | 58HDV100––20 |
| CNPV*6124A** | 1.01 | 0.89 | 58HDV100––20 |
| CSPH*4812A** | 0.99 | 0.97 | 58HDV100––20 |
| CSPH*6012A** | 1.01 | 0.97 | 58HDV100––20 |
| CAP**4817A** | 0.99 | 0.95 | 58ME(B,C)080–16 |
| CNPH*4821A** | 0.98 | 0.94 | 58ME(B,C)080–16 |
| CNPH*6024A** | 1.00 | 0.92 | 58ME(B,C)080–16 |
| CSPH*4812A** | 0.99 | 0.95 | 58ME(B,C)080–16 |
| CSPH*6012A** | 1.01 | 0.93 | 58ME(B,C)080–16 |
| CAP**4821A** | 0.98 | 0.90 | 58ME(B,C)100–20 |
| CAP**6021A** | 1.01 | 0.93 | 58ME(B,C)100–20 |
| CNPH*4821A** | 0.98 | 0.90 | 58ME(B,C)100–20 |
| CNPH*6024A** | 1.00 | 0.92 | 58ME(B,C)100–20 |
| CNPV*4821A** | 0.98 | 0.90 | 58ME(B,C)100–20 |
| CSPH*4812A** | 0.99 | 0.91 | 58ME(B,C)100–20 |
| CSPH*6012A** | 1.01 | 0.93 | 58ME(B,C)100–20 |
| CAP**4824A** | 0.99 | 0.91 | 58ME(B,C)120–20 |
| CAP**6024A** | 1.01 | 0.93 | 58ME(B,C)120–20 |
| CNPH*4821A** | 0.99 | 0.91 | 58ME(B,C)120–20 |
| CNPH*6024A** | 1.01 | 0.93 | 58ME(B,C)120–20 |
| CNPV*4824A** | 0.99 | 0.91 | 58ME(B,C)120–20 |
| CNPV*6024A** | 1.01 | 0.93 | 58ME(B,C)120–20 |
| CSPH*4812A** | 0.99 | 0.91 | 58ME(B,C)120–20 |
| CSPH*6012A** | 1.01 | 0.89 | 58ME(B,C)120–20 |
| CAP**4821A** | 0.98 | 0.94 | 58MV(B,C)080–20 |
| CAP**6021A** | 1.00 | 0.94 | 58MV(B,C)080–20 |
| CNPH*4821A** | 0.98 | 0.94 | 58MV(B,C)080–20 |
| CNPH*6024A** | 1.00 | 0.96 | 58MV(B,C)080–20 |
| CNPV*4821A** | 0.98 | 0.94 | 58MV(B,C)080–20 |

# DETAILED COOLING CAPACITIES# CONTINUED

**25HCB348A30 Outdoor Section With FY4ANF048 Indoor Section**

| COOLING INDOOR MODEL | CAPACITY | POWER | FURNACE MODEL |
|---|---|---|---|
| CSPH*4812A** | 0.98 | 0.94 | 58MV(B,C)080–20 |
| CSPH*6012A** | 1.00 | 0.94 | 58MV(B,C)080–20 |
| CAP**4821A** | 0.98 | 0.94 | 58MV(B,C)100–20 |
| CAP**6021A** | 1.00 | 0.94 | 58MV(B,C)100–20 |
| CNPH*4821A** | 0.98 | 0.94 | 58MV(B,C)100–20 |
| CNPH*6024A** | 1.00 | 0.94 | 58MV(B,C)100–20 |
| CNPV*4821A** | 0.98 | 0.94 | 58MV(B,C)100–20 |
| CSPH*4812A** | 0.98 | 0.94 | 58MV(B,C)100–20 |
| CSPH*6012A** | 1.00 | 0.94 | 58MV(B,C)100–20 |
| CAP**4824A** | 0.98 | 0.94 | 58MV(B,C)120–20 |
| CAP**6024A** | 1.00 | 0.94 | 58MV(B,C)120–20 |
| CNPH*4821A** | 0.98 | 0.94 | 58MV(B,C)120–20 |
| CNPH*6024A** | 1.00 | 0.94 | 58MV(B,C)120–20 |
| CNPV*4824A** | 0.98 | 0.94 | 58MV(B,C)120–20 |
| CNPV*6024A** | 1.00 | 0.94 | 58MV(B,C)120–20 |
| CSPH*4812A** | 0.98 | 0.94 | 58MV(B,C)120–20 |
| CSPH*6012A** | 1.00 | 0.94 | 58MV(B,C)120–20 |
| CAP**4821A** | 0.98 | 0.90 | 58PH*090–16 |
| CAP**6021A** | 1.00 | 0.92 | 58PH*090–16 |
| CNPH*4821A** | 0.98 | 0.90 | 58PH*090–16 |
| CNPH*6024A** | 1.00 | 0.92 | 58PH*090–16 |
| CNPV*4821A** | 0.98 | 0.94 | 58PH*090–16 |
| CSPH*4812A** | 0.99 | 0.91 | 58PH*090–16 |
| CSPH*6012A** | 1.01 | 0.93 | 58PH*090–16 |
| CAP**4821A** | 0.98 | 0.90 | 58PH*110–20 |
| CAP**6021A** | 1.01 | 0.89 | 58PH*110–20 |
| CNPH*4821A** | 0.98 | 0.90 | 58PH*110–20 |
| CNPH*6024A** | 1.00 | 0.92 | 58PH*110–20 |
| CNPV*4821A** | 0.98 | 0.90 | 58PH*110–20 |
| CSPH*4812A** | 0.99 | 0.91 | 58PH*110–20 |
| CSPH*6012A** | 1.01 | 0.93 | 58PH*110–20 |
| CAP**4824A** | 0.98 | 0.90 | 58PH*135–20 |
| CAP**6024A** | 1.00 | 0.92 | 58PH*135–20 |
| CNPH*4821A** | 0.98 | 0.90 | 58PH*135–20 |
| CNPH*6024A** | 1.00 | 0.92 | 58PH*135–20 |
| CNPV*4824A** | 0.98 | 0.90 | 58PH*135–20 |
| CNPV*6024A** | 1.00 | 0.92 | 58PH*135–20 |
| CSPH*4812A** | 0.99 | 0.91 | 58PH*135–20 |
| CSPH*6012A** | 1.01 | 0.93 | 58PH*135–20 |
| CAP**4821A** | 0.97 | 0.93 | 58VLR120–20 |
| CAP**6021A** | 1.00 | 0.92 | 58VLR120–20 |
| CNPH*4821A** | 0.98 | 0.94 | 58VLR120–20 |
| CNPH*6024A** | 1.00 | 0.92 | 58VLR120–20 |
| CNPH*6124A** | 1.00 | 0.92 | 58VLR120–20 |
| CNPV*4821A** | 0.98 | 0.90 | 58VLR120–20 |
| CSPH*4812A** | 0.98 | 0.94 | 58VLR120–20 |
| CSPH*6012A** | 1.00 | 0.92 | 58VLR120–20 |
| CAP**4821A** | 0.97 | 0.95 | 58VMR120–20 |
| CAP**6021A** | 1.00 | 0.96 | 58VMR120–20 |
| CNPH*4821A** | 0.98 | 0.94 | 58VMR120–20 |
| CNPH*6024A** | 0.99 | 0.91 | 58VMR120–20 |
| CNPH*6124A** | 1.00 | 0.96 | 58VMR120–20 |
| CNPV*4821A** | 0.98 | 0.94 | 58VMR120–20 |
| CSPH*4812A** | 0.98 | 0.94 | 58VMR120–20 |

| COOLING INDOOR MODEL | CAPACITY | POWER | FURNACE MODEL |
|---|---|---|---|
| CSPH*6012A** | 1.00 | 0.92 | 58VMR120–20 |
| CAP**4821A** | 0.97 | 0.93 | OVLAAB048112 |
| CAP**6021A** | 1.00 | 0.92 | OVLAAB048112 |
| CNPH*4821A** | 0.98 | 0.90 | OVLAAB048112 |
| CNPH*6024A** | 1.00 | 0.92 | OVLAAB048112 |
| CNPV*4821A** | 0.98 | 0.90 | OVLAAB048112 |
| CSPH*4812A** | 0.98 | 0.90 | OVLAAB048112 |
| CSPH*6012A** | 1.00 | 0.92 | OVLAAB048112 |
| CNPH*4821A** | 1.00 | 0.92 | OVLAAB060154 |
| CNPH*6024A** | 1.01 | 0.89 | OVLAAB060154 |
| CSPH*4812A** | 1.00 | 0.92 | OVLAAB060154 |
| CSPH*6012A** | 1.01 | 0.93 | OVLAAB060154 |
| CAP**4821A** | 0.96 | 0.90 | 59*N*A100V21**20 |
| CAP**4823A** | 0.96 | 0.90 | 59*N*A100V21**20 |
| CAP**4824A** | 0.96 | 0.90 | 59*N*A100V21**20 |
| CAP**6021A** | 0.98 | 0.90 | 59*N*A100V21**20 |
| CAP**6024A** | 0.98 | 0.90 | 59*N*A100V21**20 |
| CAP**6025A** | 0.98 | 0.90 | 59*N*A100V21**20 |
| CNPH*4821A** | 0.96 | 0.90 | 59*N*A100V21**20 |
| CNPH*6024A** | 0.98 | 0.90 | 59*N*A100V21**20 |
| CNPH*6124A** | 0.99 | 0.91 | 59*N*A100V21**20 |
| CNPV*4821A** | 0.96 | 0.90 | 59*N*A100V21**20 |
| CNPV*4824A** | 0.96 | 0.90 | 59*N*A100V21**20 |
| CNPV*6024A** | 0.98 | 0.90 | 59*N*A100V21**20 |
| CNPV*6124A** | 0.99 | 0.91 | 59*N*A100V21**20 |
| CSPH*4812A** | 0.97 | 0.91 | 59*N*A100V21**20 |
| CSPH*6012A** | 0.99 | 0.91 | 59*N*A100V21**20 |
| CAP**4823A** | 0.96 | 0.90 | 59*N*A120V24**22 |
| CAP**4824A** | 0.96 | 0.88 | 59*N*A120V24**22 |
| CAP**6024A** | 0.98 | 0.90 | 59*N*A120V24**22 |
| CAP**6025A** | 0.98 | 0.90 | 59*N*A120V24**22 |
| CNPH*4821A** | 0.96 | 0.88 | 59*N*A120V24**22 |
| CNPH*6024A** | 0.98 | 0.90 | 59*N*A120V24**22 |
| CNPH*6124A** | 0.99 | 0.91 | 59*N*A120V24**22 |
| CNPV*4824A** | 0.96 | 0.88 | 59*N*A120V24**22 |
| CNPV*6024A** | 0.98 | 0.90 | 59*N*A120V24**22 |
| CNPV*6124A** | 0.99 | 0.89 | 59*N*A120V24**22 |
| CSPH*4812A** | 0.97 | 0.89 | 59*N*A120V24**22 |
| CSPH*6012A** | 0.99 | 0.89 | 59*N*A120V24**22 |
| CNPH*4821A** | 0.96 | 0.93 | 59*P5A080E17**16 |
| CNPH*6024A** | 0.98 | 0.92 | 59*P5A080E17**16 |
| CNPV*4821A** | 0.96 | 0.93 | 59*P5A080E17**16 |
| CSPH*6012A** | 0.99 | 0.93 | 59*P5A080E17**16 |
| CAP**4821A** | 0.96 | 0.93 | 59*P5A100E21**16 |
| CAP**4823A** | 0.96 | 0.93 | 59*P5A100E21**16 |
| CAP**4824A** | 0.96 | 0.90 | 59*P5A100E21**16 |
| CAP**6021A** | 0.99 | 0.93 | 59*P5A100E21**16 |
| CAP**6024A** | 0.99 | 0.93 | 59*P5A100E21**16 |
| CAP**6025A** | 0.99 | 0.93 | 59*P5A100E21**16 |
| CNPH*4821A** | 0.97 | 0.91 | 59*P5A100E21**16 |
| CNPH*6024A** | 0.99 | 0.93 | 59*P5A100E21**16 |
| CNPH*6124A** | 0.99 | 0.93 | 59*P5A100E21**16 |
| CNPV*4821A** | 0.97 | 0.91 | 59*P5A100E21**16 |
| CNPV*4824A** | 0.97 | 0.91 | 59*P5A100E21**16 |

| COOLING INDOOR MODEL | CAPACITY | POWER | FURNACE MODEL |
|---|---|---|---|
| CNPV*6024A** | 0.99 | 0.93 | 59*P5A100E21**16 |
| CNPV*6124A** | 1.00 | 0.92 | 59*P5A100E21**16 |
| CSPH*4812A** | 0.97 | 0.91 | 59*P5A100E21**16 |
| CSPH*6012A** | 0.99 | 0.91 | 59*P5A100E21**16 |
| CAP**4823A** | 0.97 | 0.91 | 59*P5A120E24**22 |
| CAP**4824A** | 0.97 | 0.91 | 59*P5A120E24**22 |
| CAP**6024A** | 1.00 | 0.92 | 59*P5A120E24**22 |
| CAP**6025A** | 1.00 | 0.92 | 59*P5A120E24**22 |
| CNPH*4821A** | 0.97 | 0.89 | 59*P5A120E24**22 |
| CNPH*6024A** | 0.99 | 0.91 | 59*P5A120E24**22 |
| CNPH*6124A** | 1.00 | 0.92 | 59*P5A120E24**22 |
| CNPV*4824A** | 0.97 | 0.89 | 59*P5A120E24**22 |
| CNPV*6024A** | 0.99 | 0.91 | 59*P5A120E24**22 |
| CNPV*6124A** | 1.01 | 0.91 | 59*P5A120E24**22 |
| CSPH*4812A** | 0.98 | 0.90 | 59*P5A120E24**22 |
| CSPH*6012A** | 1.00 | 0.92 | 59*P5A120E24**22 |

See note on pg. 50

# DETAILED COOLING CAPACITIES# CONTINUED

| EVAPORATOR AIR | | CONDENSER ENTERING AIR TEMPERATURES °F (°C) | | | | | | | | | | | | | | | | | |
|---|---|---|---|---|---|---|---|---|---|---|---|---|---|---|---|---|---|---|---|
| | | 75 (23.9) | | | 85 (29.4) | | | 95 (35) | | | 105 (40.6) | | | 115 (46.1) | | | 125 (51.7) | | |
| CFM | EWB °F (°C) | Capacity MBtuh | | Total Sys. KW** | Capacity MBtuh | | Total Sys. KW** | Capacity MBtuh | | Total Sys. KW** | Capacity MBtuh | | Total Sys. KW** | Capacity MBtuh | | Total Sys. KW** | Capacity MBtuh | | Total Sys. KW** |
| | | Total | Sens‡ | | Total | Sens‡ | | Total | Sens‡ | | Total | Sens‡ | | Total | Sens‡ | | Total | Sens‡ | |
| 25HCB360A31 Outdoor Section With FY4ANF060 Indoor Section | | | | | | | | | | | | | | | | | | | |
| 1750 | 72 (22.2) | 71.08 | 36.09 | 4.41 | 67.69 | 34.77 | 4.86 | 64.09 | 33.39 | 5.36 | 60.33 | 31.96 | 5.90 | 56.30 | 30.45 | 6.50 | 51.84 | 28.81 | 7.14 |
| | 67 (19.4) | 65.19 | 45.05 | 4.36 | 62.05 | 43.69 | 4.81 | 58.73 | 42.27 | 5.30 | 55.30 | 40.82 | 5.85 | 51.61 | 39.29 | 6.44 | 47.57 | 37.62 | 7.09 |
| | 63 (17.2)†† | 60.79 | 43.67 | 4.31 | 57.85 | 42.31 | 4.76 | 54.78 | 40.90 | 5.26 | 51.57 | 39.45 | 5.81 | 48.15 | 37.91 | 6.40 | 44.41 | 36.26 | 7.05 |
| | 62 (16.7) | 59.61 | 53.90 | 4.30 | 56.75 | 52.49 | 4.75 | 53.77 | 51.00 | 5.25 | 50.69 | 49.41 | 5.80 | 47.50 | 47.50 | 6.40 | 45.90 | 45.90 | 6.36 |
| | 57 (13.9) | 57.48 | 57.48 | 4.28 | 55.20 | 55.20 | 4.74 | 52.79 | 52.79 | 5.24 | 50.24 | 50.24 | 5.79 | 47.49 | 47.49 | 6.40 | 44.42 | 44.42 | 7.06 |
| 2000 | 72 (22.2) | 72.12 | 37.62 | 4.54 | 68.55 | 36.26 | 4.99 | 64.87 | 34.89 | 5.48 | 60.98 | 33.44 | 6.03 | 56.80 | 31.91 | 6.62 | 52.19 | 30.25 | 7.26 |
| | 67 (19.4) | 66.24 | 47.72 | 4.48 | 62.96 | 46.34 | 4.93 | 59.50 | 44.89 | 5.43 | 55.93 | 43.42 | 5.97 | 52.11 | 41.85 | 6.57 | 47.93 | 40.14 | 7.21 |
| | 63 (17.2)†† | 61.83 | 46.19 | 4.44 | 58.77 | 44.80 | 4.89 | 55.56 | 43.36 | 5.38 | 52.22 | 41.88 | 5.93 | 48.67 | 40.31 | 6.53 | 44.80 | 38.60 | 7.18 |
| | 62 (16.7) | 60.73 | 57.58 | 4.43 | 57.79 | 56.05 | 4.88 | 54.77 | 54.33 | 5.38 | 51.88 | 51.88 | 5.93 | 48.94 | 48.94 | 6.53 | 47.37 | 47.37 | 6.51 |
| | 57 (13.9) | 59.63 | 59.63 | 4.42 | 57.18 | 57.18 | 4.87 | 54.60 | 54.60 | 5.38 | 51.89 | 51.89 | 5.93 | 48.94 | 48.94 | 6.53 | 45.66 | 45.66 | 7.19 |
| 2250 | 72 (22.2) | 72.83 | 39.05 | 4.66 | 69.16 | 37.69 | 5.11 | 65.40 | 36.31 | 5.61 | 61.39 | 34.85 | 6.15 | 57.10 | 33.30 | 6.74 | 52.35 | 31.61 | 7.37 |
| | 67 (19.4) | 66.96 | 50.26 | 4.61 | 63.58 | 48.86 | 5.06 | 60.01 | 47.39 | 5.55 | 56.35 | 45.89 | 6.09 | 52.43 | 44.28 | 6.69 | 48.14 | 42.52 | 7.33 |
| | 63 (17.2)†† | 62.58 | 48.57 | 4.56 | 59.40 | 47.16 | 5.01 | 56.09 | 45.69 | 5.51 | 52.66 | 44.18 | 6.05 | 49.01 | 42.56 | 6.65 | 45.05 | 40.80 | 7.30 |
| | 62 (16.7) | 61.68 | 60.83 | 4.56 | 58.79 | 58.79 | 5.01 | 56.05 | 56.05 | 5.51 | 53.19 | 53.19 | 6.06 | 50.08 | 50.08 | 6.66 | 46.62 | 46.62 | 7.31 |
| | 57 (13.9) | 61.37 | 61.37 | 4.55 | 58.79 | 58.79 | 5.01 | 56.06 | 56.06 | 5.51 | 53.19 | 53.19 | 6.06 | 50.08 | 50.08 | 6.66 | 46.62 | 46.62 | 7.31 |

| COOLING INDOOR MODEL | CAPACITY | POWER | FURNACE MODEL |
|---|---|---|---|
| *FY5BNB060 | 1.00 | 1.00 | |
| FB4CNF060 | 0.96 | 0.94 | |
| FB4CNF060 | 0.99 | 0.96 | |
| FE4ANB006 | 1.01 | 0.95 | |
| FV4BNB006 | 1.01 | 0.95 | |
| FX4CN(B,F)060 | 1.01 | 0.91 | |
| FX4DN(B,F)061 | 1.01 | 0.91 | |
| FY4ANB060 | 1.00 | 1.00 | |
| CAP**6021A** | 0.99 | 0.99 | |
| CAP**6024A** | 1.01 | 1.01 | |
| CAP**6025A** | 1.01 | 1.01 | |
| CNPH*6024A** | 1.00 | 1.00 | |
| CNPH*6124A** | 0.99 | 0.93 | |
| CNPV*6024A** | 1.00 | 1.00 | |
| CNPV*6124A** | 1.01 | 0.95 | |
| CSPH*6012A** | 1.01 | 1.01 | |
| CAP**6021A** | 0.97 | 0.94 | 58CV(A,X)110–20 |
| CNPH*6024A** | 0.98 | 0.95 | 58CV(A,X)110–20 |
| CNPH*6124A** | 0.99 | 0.93 | 58CV(A,X)110–20 |
| CSPH*6012A** | 0.99 | 0.96 | 58CV(A,X)110–20 |
| CAP**6024A** | 0.99 | 0.93 | 58CV(A,X)135–22 |
| CNPH*6024A** | 0.98 | 0.95 | 58CV(A,X)135–22 |
| CNPH*6124A** | 0.99 | 0.93 | 58CV(A,X)135–22 |
| CNPV*6024A** | 0.98 | 0.95 | 58CV(A,X)135–22 |
| CNPV*6124A** | 1.00 | 0.90 | 58CV(A,X)135–22 |
| CSPH*6012A** | 0.99 | 0.93 | 58CV(A,X)135–22 |
| CAP**6024A** | 0.99 | 0.93 | 58CV(A,X)155–22 |
| CNPH*6024A** | 0.99 | 0.93 | 58CV(A,X)155–22 |
| CNPH*6124A** | 0.98 | 0.92 | 58CV(A,X)155–22 |
| CNPV*6024A** | 0.99 | 0.93 | 58CV(A,X)155–22 |
| CNPV*6124A** | 1.00 | 0.90 | 58CV(A,X)155–22 |

| COOLING INDOOR MODEL | CAPACITY | POWER | FURNACE MODEL |
|---|---|---|---|
| CSPH*6012A** | 0.99 | 0.93 | 58CV(A,X)155–22 |
| CNPH*6024A** | 0.98 | 0.97 | 58HDV080––20 |
| CNPH*6124A** | 0.99 | 0.97 | 58HDV080––20 |
| CNPV*6024A** | 0.97 | 0.96 | 58HDV080––20 |
| CNPV*6124A** | 1.01 | 0.99 | 58HDV080––20 |
| CSPH*6012A** | 0.98 | 0.97 | 58HDV080––20 |
| CAP**6025A** | 0.98 | 0.95 | 58HDV100––20 |
| CNPH*6024A** | 0.98 | 0.95 | 58HDV100––20 |
| CNPH*6124A** | 0.99 | 0.96 | 58HDV100––20 |
| CNPV*6024A** | 0.98 | 0.95 | 58HDV100––20 |
| CNPV*6024A** | 0.98 | 0.97 | 58HDV100––20 |
| CNPV*6124A** | 0.99 | 0.97 | 58HDV100––20 |
| CNPV*6124A** | 1.00 | 0.96 | 58HDV100––20 |
| CSPH*6012A** | 0.98 | 0.95 | 58HDV100––20 |
| CNPH*6024A** | 0.97 | 0.91 | 58ME(B,C)080–16 |
| CNPH*6124A** | 0.98 | 0.92 | 58ME(B,C)080–16 |
| CSPH*6012A** | 0.97 | 0.92 | 58ME(B,C)080–16 |
| CAP**6021A** | 0.97 | 0.92 | 58ME(B,C)100–20 |
| CNPH*6024A** | 0.97 | 0.92 | 58ME(B,C)100–20 |
| CNPH*6124A** | 0.99 | 0.93 | 58ME(B,C)100–20 |
| CSPH*6012A** | 0.98 | 0.92 | 58ME(B,C)100–20 |
| CAP**6024A** | 0.97 | 0.92 | 58ME(B,C)120–20 |
| CNPH*6024A** | 0.97 | 0.92 | 58ME(B,C)120–20 |
| CNPH*6124A** | 0.99 | 0.93 | 58ME(B,C)120–20 |
| CNPV*6024A** | 0.97 | 0.92 | 58ME(B,C)120–20 |
| CNPV*6124A** | 1.00 | 0.90 | 58ME(B,C)120–20 |
| CSPH*6012A** | 0.98 | 0.92 | 58ME(B,C)120–20 |
| CNPH*6124A** | 0.98 | 0.97 | 58MV(B,C)080–20 |
| CNPH*6124A** | 0.98 | 0.97 | 58MV(B,C)100–20 |
| CNPH*6124A** | 0.99 | 0.96 | 58MV(B,C)120–20 |

| COOLING INDOOR MODEL | CAPACITY | POWER | FURNACE MODEL |
|---|---|---|---|
| CNPV*6124A** | 1.00 | 0.94 | 58MV(B,C)120–20 |
| CAP**6021A** | 0.98 | 0.92 | 58PH*090–16 |
| CNPH*6024A** | 0.98 | 0.92 | 58PH*090–16 |
| CSPH*6012A** | 0.99 | 0.93 | 58PH*090–16 |
| CAP**6021A** | 0.99 | 0.93 | 58PH*110–20 |
| CNPH*6024A** | 0.98 | 0.92 | 58PH*110–20 |
| CNPH*6124A** | 0.99 | 0.93 | 58PH*110–20 |
| CSPH*6012A** | 0.99 | 0.93 | 58PH*110–20 |
| CAP**6024A** | 0.98 | 0.92 | 58PH*135–20 |
| CNPH*6024A** | 0.98 | 0.92 | 58PH*135–20 |
| CNPH*6124A** | 0.99 | 0.93 | 58PH*135–20 |
| CNPV*6024A** | 0.98 | 0.92 | 58PH*135–20 |
| CNPV*6124A** | 1.00 | 0.94 | 58PH*135–20 |
| CSPH*6012A** | 0.99 | 0.93 | 58PH*135–20 |
| CNPH*6024A** | 0.97 | 0.94 | 58VLR120–20 |
| CSPH*6012A** | 0.97 | 0.94 | 58VLR120–20 |
| CAP**6024A** | 0.98 | 0.94 | 59*N*A120V24**22 |
| CAP**6025A** | 0.98 | 0.94 | 59*N*A120V24**22 |
| CNPH*6024A** | 0.98 | 0.94 | 59*N*A120V24**22 |
| CNPH*6124A** | 0.99 | 0.94 | 59*N*A120V24**22 |
| CNPV*6024A** | 0.98 | 0.94 | 59*N*A120V24**22 |
| CNPV*6124A** | 1.00 | 0.94 | 59*N*A120V24**22 |
| CSPH*6012A** | 0.99 | 0.94 | 59*N*A120V24**22 |
| CAP**6024A** | 0.98 | 0.94 | 59*P5A120E24**22 |
| CAP**6025A** | 0.98 | 0.94 | 59*P5A120E24**22 |
| CNPH*6024A** | 0.98 | 0.94 | 59*P5A120E24**22 |
| CNPH*6124A** | 0.99 | 0.94 | 59*P5A120E24**22 |
| CNPV*6024A** | 0.98 | 0.94 | 59*P5A120E24**22 |
| CNPV*6124A** | 1.00 | 0.94 | 59*P5A120E24**22 |
| CSPH*6012A** | 0.99 | 0.94 | 59*P5A120E24**22 |

† Total and sensible capacities are net capacities. Blower motor heat has been subtracted.

‡ Sensible capacities shown are based on 80°F (27°C) entering air at the indoor coil. For sensible capacities at other than 80°F (27°C), deduct 835 Btuh (245 kW) per 1000 CFM (480 L/S) of indoor coil air for each degree below 80°F (27°C), or add 835 Btuh (245 kW) per 1000 CFM (480 L/S) of indoor coil air per degree above 80°F (27°C).

# Detailed cooling capacities are based on indoor and outdoor unit at the same elevation per AHRI standard 210/240–94. If additional tubing length and/or indoor unit is located above outdoor unit, a slight variation in capacity may occur.

# HEAT PUMP HEATING PERFORMANCE

| INDOOR AIR | | OUTDOOR COIL ENTERING AIR TEMPERATURES °F (°C) | | | | | | | | | | | | | | | | | | | | | | | |
|---|---|---|---|---|---|---|---|---|---|---|---|---|---|---|---|---|---|---|---|---|---|---|---|---|---|
| | | −3 (−19.4) | | | 7 (−13.9) | | | 17 (−8.3) | | | 27 (−2.8) | | | 37 (2.8) | | | 47 (8.3) | | | 57 (13.9) | | | 67 (19.4) | | |
| EDB °F (°C) | CFM | Capacity MBtuh | | Total Sys. KW† | Capacity MBtuh | | Total Sys. KW† | Capacity MBtuh | | Total Sys. KW† | Capacity MBtuh | | Total Sys. KW† | Capacity MBtuh | | Total Sys. KW† | Capacity MBtuh | | Total Sys. KW† | Capacity MBtuh | | Total Sys. KW† | Capacity MBtuh | | Total Sys. KW† |
| | | Total | Integ* | | Total | Integ* | | Total | Integ* | | Total | Integ* | | Total | Integ* | | Total | Integ* | | Total | Integ* | | Total | Integ* | |
| 25HCB318A30 Outdoor Section With FY4ANF018 Indoor Section | | | | | | | | | | | | | | | | | | | | | | | | | |
| 65 (18.3) | 525 | 6.61 | 6.08 | 0.80 | 8.47 | 7.79 | 0.84 | 10.49 | 9.56 | 0.87 | 12.71 | 11.29 | 0.91 | 15.25 | 13.88 | 0.96 | 18.01 | 18.01 | 1.02 | 21.07 | 21.07 | 1.09 | 23.90 | 23.90 | 1.15 |
| | 600 | 6.77 | 6.23 | 0.81 | 8.66 | 7.96 | 0.84 | 10.69 | 9.75 | 0.87 | 12.97 | 11.52 | 0.91 | 15.55 | 14.15 | 0.95 | 18.36 | 18.36 | 1.01 | 21.41 | 21.41 | 1.06 | 24.06 | 24.06 | 1.12 |
| | 675 | 6.92 | 6.37 | 0.82 | 8.82 | 8.11 | 0.85 | 10.87 | 9.91 | 0.88 | 13.19 | 11.71 | 0.91 | 15.80 | 14.38 | 0.95 | 18.65 | 18.65 | 1.00 | 21.54 | 21.54 | 1.05 | 24.09 | 24.09 | 1.10 |
| 70 (21.1) | 525 | 6.29 | 5.79 | 0.83 | 8.20 | 7.53 | 0.87 | 10.20 | 9.30 | 0.91 | 12.39 | 11.01 | 0.95 | 14.87 | 13.53 | 1.00 | 17.64 | 17.64 | 1.06 | 20.64 | 20.64 | 1.14 | 23.62 | 23.62 | 1.20 |
| | 600 | 6.46 | 5.94 | 0.84 | 8.39 | 7.71 | 0.88 | 10.41 | 9.49 | 0.91 | 12.62 | 11.21 | 0.95 | 15.21 | 13.84 | 0.99 | 18.00 | 18.00 | 1.05 | 21.06 | 21.06 | 1.11 | 23.79 | 23.79 | 1.17 |
| | 675 | 6.61 | 6.08 | 0.86 | 8.53 | 7.84 | 0.89 | 10.59 | 9.66 | 0.92 | 12.87 | 11.43 | 0.95 | 15.46 | 14.07 | 0.99 | 18.28 | 18.28 | 1.04 | 21.29 | 21.29 | 1.10 | 23.87 | 23.87 | 1.15 |
| 75 (23.9) | 525 | 5.96 | 5.48 | 0.86 | 7.87 | 7.23 | 0.90 | 9.91 | 9.03 | 0.95 | 12.09 | 10.74 | 0.99 | 14.52 | 13.21 | 1.04 | 17.27 | 17.27 | 1.11 | 20.23 | 20.23 | 1.19 | 23.29 | 23.29 | 1.26 |
| | 600 | 6.12 | 5.63 | 0.87 | 8.06 | 7.40 | 0.91 | 10.12 | 9.22 | 0.95 | 12.33 | 10.95 | 0.99 | 14.82 | 13.49 | 1.04 | 17.62 | 17.62 | 1.10 | 20.67 | 20.67 | 1.17 | 23.50 | 23.50 | 1.22 |
| | 675 | 6.27 | 5.77 | 0.89 | 8.24 | 7.58 | 0.92 | 10.30 | 9.39 | 0.95 | 12.54 | 11.14 | 0.99 | 15.07 | 13.71 | 1.03 | 17.90 | 17.90 | 1.09 | 20.94 | 20.94 | 1.15 | 23.61 | 23.61 | 1.20 |

| HEATING INDOOR MODEL | CAPACITY | POWER | FURNACE MODEL |
|---|---|---|---|
| *FB4CNF018 | 1.00 | 1.00 | |
| FB4CNF018 | 1.02 | 1.02 | |
| FB4CNF024 | 1.02 | 1.02 | |
| FB4CNF024 | 1.00 | 1.00 | |
| FE4ANF002 | 0.97 | 0.95 | |
| FF1ENP018 | 1.03 | 1.10 | |
| FF1ENP019 | 1.02 | 1.02 | |
| FF1ENP024 | 1.01 | 1.06 | |
| FF1ENP025 | 1.02 | 1.00 | |
| FV4BNF002 | 0.97 | 0.95 | |
| FX4CNF018 | 1.02 | 1.02 | |
| FX4CNF024 | 0.99 | 0.98 | |
| FX4DNF019 | 1.02 | 0.98 | |
| FX4DNF025 | 1.02 | 0.99 | |
| FY4ANF018 | 1.03 | 1.10 | |
| FY4ANF024 | 1.03 | 1.10 | |
| FY5BNF018 | 1.02 | 1.06 | |
| FY5BNF018 | 1.00 | 1.03 | |
| FY5BNF024 | 1.03 | 1.06 | |
| FY5BNF024 | 1.00 | 1.02 | |
| CAP**1814A** | 1.03 | 1.12 | |
| CAP**2414A** | 1.03 | 1.07 | |
| CAP**2417A** | 1.03 | 1.07 | |
| CAP**3619A** | 1.03 | 1.06 | |
| CNPF*2418A** | 1.03 | 1.06 | |
| CNPH*2417A** | 1.03 | 1.06 | |
| CNPV*1814A** | 1.03 | 1.07 | |
| CNPV*1917A** | 1.03 | 1.04 | |
| CNPV*2414A** | 1.03 | 1.06 | |
| CNPV*2417A** | 1.03 | 1.06 | |
| CSPH*2412A** | 1.03 | 1.06 | |
| CAP**1814A** | 0.98 | 1.05 | 58CV(A,X)070–12 |
| CAP**2414A** | 0.99 | 1.02 | 58CV(A,X)070–12 |
| CNPH*2417A** | 1.00 | 1.02 | 58CV(A,X)070–12 |
| CNPV*1814A** | 1.00 | 1.03 | 58CV(A,X)070–12 |
| CNPV*2414A** | 1.00 | 1.02 | 58CV(A,X)070–12 |
| CSPH*2412A** | 1.00 | 1.02 | 58CV(A,X)070–12 |
| CAP**2417A** | 1.00 | 1.02 | 58CV(A,X)090–16 |
| CNPH*2417A** | 1.01 | 1.02 | 58CV(A,X)090–16 |
| CNPV*1917A** | 1.01 | 1.00 | 58CV(A,X)090–16 |

| HEATING INDOOR MODEL | CAPACITY | POWER | FURNACE MODEL |
|---|---|---|---|
| CNPV*2417A** | 1.01 | 1.02 | 58CV(A,X)090–16 |
| CSPH*2412A** | 1.01 | 1.02 | 58CV(A,X)090–16 |
| CNPH*2417A** | 1.02 | 0.97 | 58HDV040––12 |
| CNPV*1917A** | 1.03 | 0.95 | 58HDV040––12 |
| CNPV*2417A** | 1.03 | 0.98 | 58HDV040––12 |
| CSPH*2412A** | 1.02 | 0.97 | 58HDV040––12 |
| CNPH*2417A** | 1.02 | 0.97 | 58HDV060––12 |
| CNPV*1917A** | 1.03 | 0.94 | 58HDV060––12 |
| CNPV*2417A** | 1.03 | 0.98 | 58HDV060––12 |
| CSPH*2412A** | 1.02 | 0.97 | 58HDV060––12 |
| CAP**2417A** | 1.02 | 0.98 | 58ME(B,C)060–12 |
| CNPH*2417A** | 1.01 | 0.99 | 58ME(B,C)060–12 |
| CNPV*1917A** | 1.02 | 0.96 | 58ME(B,C)060–12 |
| CNPV*2417A** | 1.01 | 0.99 | 58ME(B,C)060–12 |
| CSPH*2412A** | 1.00 | 1.01 | 58ME(B,C)060–12 |
| CAP**2417A** | 1.02 | 0.96 | 58MEB040–12 |
| CNPH*2417A** | 1.02 | 0.97 | 58MEB040–12 |
| CNPV*1917A** | 1.03 | 0.95 | 58MEB040–12 |
| CNPV*2417A** | 1.02 | 0.97 | 58MEB040–12 |
| CSPH*2412A** | 1.02 | 0.98 | 58MEB040–12 |
| CNPH*2417A** | 1.00 | 1.02 | 58MV(B,C)040–14 |
| CSPH*2412A** | 1.00 | 1.02 | 58MV(B,C)040–14 |
| CAP**2417A** | 1.00 | 1.02 | 58MV(B,C)060–14 |
| CNPH*2417A** | 1.00 | 1.02 | 58MV(B,C)060–14 |
| CNPV*1917A** | 1.01 | 1.01 | 58MV(B,C)060–14 |
| CNPV*2417A** | 1.00 | 1.02 | 58MV(B,C)060–14 |
| CSPH*2412A** | 1.00 | 1.02 | 58MV(B,C)060–14 |
| CNPH*2417A** | 1.01 | 1.02 | 58MV(B,C)080–14 |
| CSPH*2412A** | 1.01 | 1.02 | 58MV(B,C)080–14 |
| CAP**1814A** | 1.00 | 1.03 | 58PH*045–08 |
| CAP**2414A** | 1.02 | 1.01 | 58PH*045–08 |
| CNPH*2417A** | 1.02 | 1.00 | 58PH*045–08 |
| CNPV*1814A** | 1.01 | 1.02 | 58PH*045–08 |
| CNPV*2414A** | 1.02 | 1.00 | 58PH*045–08 |
| CSPH*2412A** | 1.02 | 1.01 | 58PH*045–08 |
| CAP**2417A** | 1.01 | 0.98 | 58VLR105–12 |
| CNPH*2417A** | 1.02 | 0.98 | 58VLR105–12 |
| CNPV*2417A** | 1.02 | 0.98 | 58VLR105–12 |
| CSPH*2412A** | 1.02 | 0.98 | 58VLR105–12 |
| CAP**2417A** | 1.00 | 1.01 | 58VMR105–12 |

| HEATING INDOOR MODEL | CAPACITY | POWER | FURNACE MODEL |
|---|---|---|---|
| CNPH*2417A** | 1.01 | 1.01 | 58VMR105–12 |
| CNPV*2417A** | 1.01 | 1.01 | 58VMR105–12 |
| CSPH*2412A** | 1.01 | 1.01 | 58VMR105–12 |
| CAP**2417A** | 1.00 | 0.98 | OVLAAB036098 |
| CNPH*2417A** | 1.01 | 0.98 | OVLAAB036098 |
| CNPV*1917A** | 1.01 | 0.97 | OVLAAB036098 |
| CNPV*2417A** | 1.01 | 0.98 | OVLAAB036098 |
| CSPH*2412A** | 1.01 | 0.99 | OVLAAB036098 |
| CAP**2417A** | 1.01 | 0.98 | OVMAAB036098 |
| CNPH*2417A** | 1.02 | 0.97 | OVMAAB036098 |
| CNPV*1917A** | 1.02 | 0.96 | OVMAAB036098 |
| CNPV*2417A** | 1.02 | 0.97 | OVMAAB036098 |
| CSPH*2412A** | 1.02 | 0.98 | OVMAAB036098 |
| CAP**2417A** | 0.99 | 1.01 | 59*N*A060V17**14 |
| CNPH*2417A** | 0.99 | 1.00 | 59*N*A060V17**14 |
| CNPV*1917A** | 0.99 | 0.99 | 59*N*A060V17**14 |
| CNPV*2417A** | 0.99 | 1.00 | 59*N*A060V17**14 |
| CSPH*2412A** | 0.99 | 1.01 | 59*N*A060V17**14 |
| CAP**2417A** | 0.98 | 1.01 | 59*N*A080V17**14 |
| CNPH*2417A** | 0.98 | 1.01 | 59*N*A080V17**14 |
| CNPV*1917A** | 0.99 | 0.99 | 59*N*A080V17**14 |
| CNPV*2417A** | 0.98 | 1.01 | 59*N*A080V17**14 |
| CSPH*2412A** | 0.98 | 1.01 | 59*N*A080V17**14 |
| CAP**1814A** | 0.98 | 1.06 | 59*P5A040E14**10 |
| CAP**2414A** | 0.99 | 1.02 | 59*P5A040E14**10 |
| CAP**2417A** | 0.99 | 1.02 | 59*P5A040E14**10 |
| CNPH*2417A** | 0.99 | 1.03 | 59*P5A040E14**10 |
| CNPV*1814A** | 0.98 | 1.05 | 59*P5A040E14**10 |
| CNPV*1917A** | 1.00 | 1.01 | 59*P5A040E14**10 |
| CNPV*2414A** | 0.99 | 1.03 | 59*P5A040E14**10 |
| CNPV*2417A** | 0.99 | 1.03 | 59*P5A040E14**10 |
| CSPH*2412A** | 0.99 | 1.03 | 59*P5A040E14**10 |

See note on pg. 65

# HEAT PUMP HEATING PERFORMANCE CONTINUED

| INDOOR AIR | | OUTDOOR COIL ENTERING AIR TEMPERATURES °F (°C) | | | | | | | | | | | | | | | | | | | | | | | |
|---|---|---|---|---|---|---|---|---|---|---|---|---|---|---|---|---|---|---|---|---|---|---|---|---|---|
| | | −3 (−19.4) | | | 7 (−13.9) | | | 17 (−8.3) | | | 27 (−2.8) | | | 37 (2.8) | | | 47 (8.3) | | | 57 (13.9) | | | 67 (19.4) | | |
| EDB °F (°C) | CFM | Capacity MBtuh | | Total Sys. KW† | Capacity MBtuh | | Total Sys. KW† | Capacity MBtuh | | Total Sys. KW† | Capacity MBtuh | | Total Sys. KW† | Capacity MBtuh | | Total Sys. KW† | Capacity MBtuh | | Total Sys. KW† | Capacity MBtuh | | Total Sys. KW† | Capacity MBtuh | | Total Sys. KW† |
| | | Total | Integ* | | Total | Integ* | | Total | Integ* | | Total | Integ* | | Total | Integ* | | Total | Integ* | | Total | Integ* | | Total | Integ* | |
| 25HCB324A30 Outdoor Section With FY4ANF024 Indoor Section | | | | | | | | | | | | | | | | | | | | | | | | | |
| 65 (18.3) | 700 | 9.58 | 8.82 | 1.52 | 11.98 | 11.01 | 1.59 | 14.58 | 13.29 | 1.66 | 17.51 | 15.56 | 1.75 | 20.82 | 18.94 | 1.86 | 24.20 | 24.20 | 1.96 | 27.14 | 27.14 | 2.06 | 30.15 | 30.15 | 2.17 |
| | 800 | 9.77 | 8.99 | 1.54 | 12.19 | 11.20 | 1.60 | 14.81 | 13.51 | 1.66 | 17.80 | 15.81 | 1.74 | 21.14 | 19.24 | 1.84 | 24.17 | 24.17 | 1.91 | 26.94 | 26.94 | 2.00 | 29.60 | 29.60 | 2.09 |
| | 900 | 9.94 | 9.15 | 1.56 | 12.37 | 11.37 | 1.61 | 15.03 | 13.70 | 1.67 | 18.06 | 16.04 | 1.74 | 21.40 | 19.47 | 1.83 | 24.07 | 24.07 | 1.89 | 26.59 | 26.59 | 1.97 | 28.87 | 28.87 | 2.03 |
| 70 (21.1) | 700 | 9.29 | 8.54 | 1.59 | 11.70 | 10.75 | 1.67 | 14.30 | 13.04 | 1.74 | 17.18 | 15.26 | 1.84 | 20.47 | 18.63 | 1.95 | 23.95 | 23.95 | 2.06 | 26.95 | 26.95 | 2.17 | 30.01 | 30.01 | 2.29 |
| | 800 | 9.48 | 8.72 | 1.61 | 11.91 | 10.94 | 1.67 | 14.53 | 13.25 | 1.74 | 17.46 | 15.51 | 1.82 | 20.79 | 18.92 | 1.93 | 24.00 | 24.00 | 2.01 | 26.83 | 26.83 | 2.11 | 29.61 | 29.61 | 2.20 |
| | 900 | 9.65 | 8.87 | 1.63 | 12.09 | 11.11 | 1.69 | 14.73 | 13.43 | 1.75 | 17.71 | 15.73 | 1.83 | 21.06 | 19.16 | 1.92 | 23.97 | 23.97 | 1.99 | 26.60 | 26.60 | 2.07 | 29.03 | 29.03 | 2.15 |
| 75 (23.9) | 700 | 8.96 | 8.24 | 1.67 | 11.40 | 10.48 | 1.75 | 14.02 | 12.78 | 1.83 | 16.85 | 14.97 | 1.93 | 20.14 | 18.33 | 2.05 | 23.63 | 23.63 | 2.17 | 26.71 | 26.71 | 2.28 | 29.80 | 29.80 | 2.41 |
| | 800 | 9.15 | 8.42 | 1.68 | 11.61 | 10.67 | 1.75 | 14.25 | 12.99 | 1.83 | 17.13 | 15.21 | 1.91 | 20.44 | 18.60 | 2.03 | 23.84 | 23.84 | 2.12 | 26.68 | 26.68 | 2.22 | 29.54 | 29.54 | 2.32 |
| | 900 | 9.33 | 8.58 | 1.70 | 11.80 | 10.84 | 1.77 | 14.45 | 13.17 | 1.83 | 17.37 | 15.43 | 1.91 | 20.71 | 18.84 | 2.02 | 23.82 | 23.82 | 2.09 | 26.53 | 26.53 | 2.18 | 29.10 | 29.10 | 2.27 |

| HEATING INDOOR MODEL | CAPACITY | POWER | FURNACE MODEL |
|---|---|---|---|
| *FY5BNF024 | 1.00 | 1.00 | |
| FB4CNF024 | 1.03 | 1.05 | |
| FB4CNF024 | 1.00 | 1.02 | |
| FB4CNF030 | 1.03 | 1.00 | |
| FB4CNF030 | 1.00 | 0.97 | |
| FE4AN(B,F)003 | 1.00 | 0.97 | |
| FE4ANF002 | 1.01 | 0.98 | |
| FF1ENP024 | 1.04 | 1.08 | |
| FF1ENP025 | 1.03 | 1.04 | |
| FF1ENP030 | 1.05 | 1.09 | |
| FF1ENP031 | 1.02 | 1.02 | |
| FV4BN(B,F)003 | 1.00 | 0.97 | |
| FV4BNF002 | 1.01 | 0.98 | |
| FX4CNF024 | 1.03 | 1.03 | |
| FX4CNF030 | 1.03 | 0.98 | |
| FX4DN(B,F)031 | 1.02 | 0.99 | |
| FX4DNF025 | 1.03 | 1.00 | |
| FY4ANF024 | 1.04 | 1.08 | |
| FY4ANF030 | 1.04 | 1.06 | |
| FY5BNF024 | 1.03 | 1.03 | |
| FY5BNF030 | 1.03 | 1.02 | |
| FY5BNF030 | 1.00 | 0.99 | |
| CAP**2414A** | 1.06 | 1.08 | |
| CAP**2417A** | 1.06 | 1.08 | |
| CAP**3014A** | 1.02 | 1.05 | |
| CAP**3017A** | 1.02 | 1.05 | |
| CAP**3619A** | 1.03 | 1.05 | |
| CNPF*2418A** | 1.06 | 1.06 | |
| CNPH*2417A** | 1.06 | 1.06 | |
| CNPH*3017A** | 1.02 | 1.04 | |
| CNPV*2414A** | 1.06 | 1.06 | |
| CNPV*2417A** | 1.06 | 1.06 | |
| CNPV*3014A** | 1.02 | 1.04 | |
| CNPV*3017A** | 1.02 | 1.04 | |
| CSPH*2412A** | 1.05 | 1.05 | |
| CSPH*3012A** | 1.01 | 1.03 | |
| CAP**2414A** | 1.02 | 1.04 | 58CV(A,X)070−12 |
| CAP**3014A** | 1.00 | 1.01 | 58CV(A,X)070−12 |
| CNPH*2417A** | 1.02 | 1.02 | 58CV(A,X)070−12 |
| CNPH*3017A** | 1.00 | 1.00 | 58CV(A,X)070−12 |

| HEATING INDOOR MODEL | CAPACITY | POWER | FURNACE MODEL |
|---|---|---|---|
| CNPV*2414A** | 1.02 | 1.02 | 58CV(A,X)070−12 |
| CNPV*3014A** | 1.00 | 1.01 | 58CV(A,X)070−12 |
| CSPH*2412A** | 1.02 | 1.02 | 58CV(A,X)070−12 |
| CSPH*3012A** | 0.99 | 1.00 | 58CV(A,X)070−12 |
| CAP**2417A** | 1.02 | 1.02 | 58CV(A,X)090−16 |
| CAP**3017A** | 1.00 | 0.99 | 58CV(A,X)090−16 |
| CNPH*2417A** | 1.02 | 1.01 | 58CV(A,X)090−16 |
| CNPH*3017A** | 1.00 | 0.99 | 58CV(A,X)090−16 |
| CNPV*2417A** | 1.02 | 1.01 | 58CV(A,X)090−16 |
| CNPV*3017A** | 1.00 | 0.99 | 58CV(A,X)090−16 |
| CSPH*2412A** | 1.02 | 1.01 | 58CV(A,X)090−16 |
| CSPH*3012A** | 0.99 | 0.99 | 58CV(A,X)090−16 |
| CNPH*2417A** | 1.02 | 1.02 | 58CV(A,X)110−20 |
| CNPH*3017A** | 1.00 | 0.99 | 58CV(A,X)110−20 |
| CSPH*2412A** | 1.02 | 1.01 | 58CV(A,X)110−20 |
| CSPH*3012A** | 0.99 | 0.99 | 58CV(A,X)110−20 |
| CNPH*2417A** | 1.02 | 1.01 | 58CV(A,X)135−22 |
| CNPH*3017A** | 1.00 | 0.99 | 58CV(A,X)135−22 |
| CSPH*2412A** | 1.02 | 1.01 | 58CV(A,X)135−22 |
| CSPH*3012A** | 0.99 | 0.99 | 58CV(A,X)135−22 |
| CNPH*2417A** | 1.02 | 1.01 | 58CV(A,X)155−22 |
| CNPH*3017A** | 1.00 | 0.99 | 58CV(A,X)155−22 |
| CSPH*2412A** | 1.02 | 1.01 | 58CV(A,X)155−22 |
| CSPH*3012A** | 0.99 | 0.99 | 58CV(A,X)155−22 |
| CAP**3619A** | 1.01 | 0.99 | 58HDV040−−12 |
| CNPH*2417A** | 1.03 | 1.03 | 58HDV040−−12 |
| CNPH*3017A** | 1.01 | 0.99 | 58HDV040−−12 |
| CNPV*2417A** | 1.03 | 1.02 | 58HDV040−−12 |
| CNPV*3017A** | 1.00 | 0.98 | 58HDV040−−12 |
| CSPH*2412A** | 1.03 | 1.02 | 58HDV040−−12 |
| CSPH*3012A** | 1.00 | 0.99 | 58HDV040−−12 |
| CAP**3619A** | 1.01 | 0.98 | 58HDV060−−12 |
| CNPH*2417A** | 1.03 | 1.01 | 58HDV060−−12 |
| CNPH*3017A** | 1.01 | 0.98 | 58HDV060−−12 |
| CNPV*2417A** | 1.03 | 1.00 | 58HDV060−−12 |
| CNPV*3017A** | 1.00 | 0.97 | 58HDV060−−12 |
| CSPH*2412A** | 1.03 | 1.01 | 58HDV060−−12 |
| CSPH*3012A** | 1.00 | 0.98 | 58HDV060−−12 |
| CNPH*2417A** | 1.03 | 0.98 | 58HDV080−−20 |
| CNPH*3017A** | 1.00 | 0.95 | 58HDV080−−20 |

| HEATING INDOOR MODEL | CAPACITY | POWER | FURNACE MODEL |
|---|---|---|---|
| CSPH*2412A** | 1.03 | 0.98 | 58HDV080−−20 |
| CSPH*3012A** | 0.99 | 0.95 | 58HDV080−−20 |
| CNPH*2417A** | 1.03 | 0.99 | 58HDV100−−20 |
| CNPH*3017A** | 1.00 | 0.95 | 58HDV100−−20 |
| CSPH*2412A** | 1.03 | 0.99 | 58HDV100−−20 |
| CSPH*3012A** | 0.99 | 0.95 | 58HDV100−−20 |
| CAP**2417A** | 1.03 | 0.99 | 58ME(B,C)060−12 |
| CAP**3017A** | 0.96 | 0.91 | 58ME(B,C)060−12 |
| CNPH*2417A** | 1.03 | 0.99 | 58ME(B,C)060−12 |
| CNPH*3017A** | 0.96 | 0.91 | 58ME(B,C)060−12 |
| CNPV*2417A** | 1.03 | 0.99 | 58ME(B,C)060−12 |
| CNPV*3017A** | 0.96 | 0.91 | 58ME(B,C)060−12 |
| CSPH*2412A** | 1.02 | 0.98 | 58ME(B,C)060−12 |
| CSPH*3012A** | 0.96 | 0.92 | 58ME(B,C)060−12 |
| CAP**2417A** | 0.98 | 0.96 | 58ME(B,C)080−12 |
| CAP**3017A** | 0.99 | 0.95 | 58ME(B,C)080−12 |
| CNPH*2417A** | 0.98 | 0.96 | 58ME(B,C)080−12 |
| CNPH*3017A** | 0.96 | 0.92 | 58ME(B,C)080−12 |
| CNPV*2417A** | 0.98 | 0.96 | 58ME(B,C)080−12 |
| CNPV*3017A** | 0.96 | 0.92 | 58ME(B,C)080−12 |
| CSPH*2412A** | 1.02 | 0.99 | 58ME(B,C)080−12 |
| CSPH*3012A** | 0.96 | 0.93 | 58ME(B,C)080−12 |
| CAP**2417A** | 1.03 | 0.99 | 58MEB040−12 |
| CAP**3017A** | 0.96 | 0.91 | 58MEB040−12 |
| CNPH*2417A** | 1.03 | 0.99 | 58MEB040−12 |
| CNPH*3017A** | 0.96 | 0.92 | 58MEB040−12 |
| CNPV*2417A** | 1.03 | 0.99 | 58MEB040−12 |
| CNPV*3017A** | 0.96 | 0.92 | 58MEB040−12 |
| CSPH*2412A** | 1.02 | 0.99 | 58MEB040−12 |
| CSPH*3012A** | 0.96 | 0.92 | 58MEB040−12 |
| CNPH*2417A** | 1.02 | 1.02 | 58MV(B,C)040−14 |
| CNPH*3017A** | 1.00 | 0.99 | 58MV(B,C)040−14 |
| CSPH*2412A** | 1.02 | 1.01 | 58MV(B,C)040−14 |
| CSPH*3012A** | 0.99 | 0.99 | 58MV(B,C)040−14 |
| CAP**2417A** | 1.02 | 1.03 | 58MV(B,C)060−14 |
| CAP**3017A** | 1.00 | 1.00 | 58MV(B,C)060−14 |
| CNPH*2417A** | 1.02 | 1.02 | 58MV(B,C)060−14 |
| CNPH*3017A** | 1.00 | 0.99 | 58MV(B,C)060−14 |
| CNPV*2417A** | 1.02 | 1.02 | 58MV(B,C)060−14 |
| CNPV*3017A** | 1.00 | 0.99 | 58MV(B,C)060−14 |

# HEAT PUMP HEATING PERFORMANCE CONTINUED

**25HCB324A30 Outdoor Section With FY4ANF024 Indoor Section**

| HEATING INDOOR MODEL | CAPACITY | POWER | FURNACE MODEL |
|---|---|---|---|
| CSPH*2412A** | 1.02 | 1.01 | 58MV(B,C)060–14 |
| CSPH*3012A** | 0.99 | 0.99 | 58MV(B,C)060–14 |
| CNPH*2417A** | 1.02 | 1.02 | 58MV(B,C)080–14 |
| CNPH*3017A** | 1.00 | 0.99 | 58MV(B,C)080–14 |
| CSPH*2412A** | 1.02 | 1.01 | 58MV(B,C)080–14 |
| CSPH*3012A** | 0.99 | 0.99 | 58MV(B,C)080–14 |
| CNPH*2417A** | 1.02 | 1.02 | 58MV(B,C)080–20 |
| CNPH*3017A** | 1.00 | 0.99 | 58MV(B,C)080–20 |
| CSPH*2412A** | 1.02 | 1.01 | 58MV(B,C)080–20 |
| CSPH*3012A** | 0.99 | 0.99 | 58MV(B,C)080–20 |
| CNPH*2417A** | 1.02 | 1.01 | 58MV(B,C)100–20 |
| CNPH*3017A** | 1.00 | 0.99 | 58MV(B,C)100–20 |
| CSPH*2412A** | 1.02 | 1.01 | 58MV(B,C)100–20 |
| CSPH*3012A** | 0.99 | 0.99 | 58MV(B,C)100–20 |
| CNPH*2417A** | 1.02 | 1.02 | 58MV(B,C)120–20 |
| CNPH*3017A** | 1.00 | 1.00 | 58MV(B,C)120–20 |
| CSPH*2412A** | 1.02 | 1.02 | 58MV(B,C)120–20 |
| CSPH*3012A** | 0.99 | 1.00 | 58MV(B,C)120–20 |
| CAP**2414A** | 1.03 | 1.03 | 58PH*045–08 |
| CAP**3014A** | 0.99 | 0.98 | 58PH*045–08 |
| CNPH*2417A** | 1.03 | 1.03 | 58PH*045–08 |
| CNPH*3017A** | 1.00 | 0.98 | 58PH*045–08 |
| CNPV*2414A** | 1.03 | 1.03 | 58PH*045–08 |
| CNPV*3014A** | 1.00 | 0.99 | 58PH*045–08 |
| CSPH*2412A** | 1.03 | 1.01 | 58PH*045–08 |
| CSPH*3012A** | 0.99 | 0.98 | 58PH*045–08 |
| CAP**2417A** | 1.02 | 1.01 | 58VLR105–12 |
| CAP**3017A** | 1.01 | 0.99 | 58VLR105–12 |
| CNPH*2417A** | 1.03 | 1.00 | 58VLR105–12 |
| CNPH*3017A** | 1.01 | 0.99 | 58VLR105–12 |
| CNPV*2417A** | 1.03 | 1.00 | 58VLR105–12 |
| CNPV*3017A** | 1.01 | 0.99 | 58VLR105–12 |
| CSPH*2412A** | 1.03 | 0.99 | 58VLR105–12 |
| CSPH*3012A** | 1.00 | 0.98 | 58VLR105–12 |
| CAP**2417A** | 1.00 | 1.02 | 58VMR105–12 |
| CAP**3017A** | 1.00 | 1.00 | 58VMR105–12 |
| CNPH*2417A** | 1.01 | 1.01 | 58VMR105–12 |
| CNPH*3017A** | 1.00 | 1.00 | 58VMR105–12 |
| CNPV*2417A** | 1.02 | 1.02 | 58VMR105–12 |
| CNPV*3017A** | 1.00 | 1.00 | 58VMR105–12 |
| CSPH*2412A** | 1.01 | 1.01 | 58VMR105–12 |
| CSPH*3012A** | 1.00 | 1.01 | 58VMR105–12 |
| CAP**2417A** | 1.01 | 1.00 | OVLAAB036098 |
| CAP**3017A** | 1.00 | 0.98 | OVLAAB036098 |
| CNPH*2417A** | 1.02 | 1.00 | OVLAAB036098 |
| CNPH*3017A** | 1.00 | 0.98 | OVLAAB036098 |
| CNPV*2417A** | 1.02 | 1.00 | OVLAAB036098 |
| CNPV*3017A** | 1.00 | 0.98 | OVLAAB036098 |
| CSPH*2412A** | 1.02 | 0.99 | OVLAAB036098 |
| CSPH*3012A** | 1.01 | 0.97 | OVLAAB036098 |
| CAP**2417A** | 1.02 | 1.01 | OVMAAB036098 |
| CAP**3017A** | 1.00 | 0.98 | OVMAAB036098 |
| CNPH*2417A** | 1.02 | 1.00 | OVMAAB036098 |
| CNPH*3017A** | 1.00 | 0.98 | OVMAAB036098 |

| HEATING INDOOR MODEL | CAPACITY | POWER | FURNACE MODEL |
|---|---|---|---|
| CNPV*2417A** | 1.02 | 1.00 | OVMAAB036098 |
| CNPV*3017A** | 1.00 | 0.98 | OVMAAB036098 |
| CSPH*2412A** | 1.02 | 0.99 | OVMAAB036098 |
| CSPH*3012A** | 1.02 | 0.98 | OVMAAB036098 |
| CAP**2417A** | 1.00 | 1.00 | OVMAAB042112 |
| CAP**3017A** | 0.99 | 0.98 | OVMAAB042112 |
| CNPH*2417A** | 1.01 | 1.00 | OVMAAB042112 |
| CNPH*3017A** | 0.99 | 0.98 | OVMAAB042112 |
| CNPV*2417A** | 1.01 | 1.00 | OVMAAB042112 |
| CNPV*3017A** | 0.99 | 0.98 | OVMAAB042112 |
| CSPH*2412A** | 1.01 | 0.99 | OVMAAB042112 |
| CSPH*3012A** | 1.01 | 0.98 | OVMAAB042112 |
| CAP**2417A** | 0.98 | 1.00 | 59*N*A060V17**14 |
| CAP**3017A** | 0.97 | 0.97 | 59*N*A060V17**14 |
| CNPH*2417A** | 0.98 | 0.99 | 59*N*A060V17**14 |
| CNPH*3017A** | 0.97 | 0.97 | 59*N*A060V17**14 |
| CNPH*3117A** | 0.95 | 0.92 | 59*N*A060V17**14 |
| CNPV*2417A** | 0.98 | 0.99 | 59*N*A060V17**14 |
| CNPV*3017A** | 0.97 | 0.97 | 59*N*A060V17**14 |
| CNPV*3117A** | 0.95 | 0.92 | 59*N*A060V17**14 |
| CSPH*2412A** | 0.98 | 0.98 | 59*N*A060V17**14 |
| CSPH*3012A** | 0.98 | 0.97 | 59*N*A060V17**14 |
| CAP**2417A** | 0.97 | 1.00 | 59*N*A080V17**14 |
| CAP**3017A** | 0.97 | 0.97 | 59*N*A080V17**14 |
| CNPH*2417A** | 0.98 | 0.99 | 59*N*A080V17**14 |
| CNPH*3017A** | 0.97 | 0.97 | 59*N*A080V17**14 |
| CNPH*3117A** | 0.95 | 0.93 | 59*N*A080V17**14 |
| CNPV*2417A** | 0.98 | 0.99 | 59*N*A080V17**14 |
| CNPV*3017A** | 0.97 | 0.97 | 59*N*A080V17**14 |
| CNPV*3117A** | 0.95 | 0.93 | 59*N*A080V17**14 |
| CSPH*2412A** | 0.98 | 0.99 | 59*N*A080V17**14 |
| CSPH*3012A** | 0.97 | 0.96 | 59*N*A080V17**14 |
| CNPH*2417A** | 0.99 | 0.97 | 59*N*A100V21**20 |
| CNPH*3017A** | 0.97 | 0.95 | 59*N*A100V21**20 |
| CNPH*3117A** | 0.94 | 0.90 | 59*N*A100V21**20 |
| CSPH*2412A** | 0.99 | 0.96 | 59*N*A100V21**20 |
| CSPH*3012A** | 0.98 | 0.94 | 59*N*A100V21**20 |
| CNPH*2417A** | 0.99 | 0.98 | 59*N*A120V24**22 |
| CNPH*3017A** | 0.97 | 0.95 | 59*N*A120V24**22 |
| CNPH*3117A** | 0.94 | 0.90 | 59*N*A120V24**22 |
| CSPH*2412A** | 0.99 | 0.97 | 59*N*A120V24**22 |
| CSPH*3012A** | 0.98 | 0.95 | 59*N*A120V24**22 |
| CAP**2414A** | 1.01 | 1.03 | 59*P5A040E14**10 |
| CAP**2417A** | 1.01 | 1.02 | 59*P5A040E14**10 |
| CAP**3014A** | 0.99 | 1.01 | 59*P5A040E14**10 |
| CAP**3017A** | 0.98 | 0.99 | 59*P5A040E14**10 |
| CNPH*2417A** | 1.02 | 1.02 | 59*P5A040E14**10 |
| CNPH*3017A** | 0.98 | 0.99 | 59*P5A040E14**10 |
| CNPH*3117A** | 0.95 | 0.94 | 59*P5A040E14**10 |
| CNPV*2414A** | 1.02 | 1.02 | 59*P5A040E14**10 |
| CNPV*2417A** | 1.02 | 1.02 | 59*P5A040E14**10 |
| CNPV*3014A** | 0.99 | 1.01 | 59*P5A040E14**10 |
| CNPV*3017A** | 0.98 | 0.99 | 59*P5A040E14**10 |
| CNPV*3117A** | 0.95 | 0.94 | 59*P5A040E14**10 |

| HEATING INDOOR MODEL | CAPACITY | POWER | FURNACE MODEL |
|---|---|---|---|
| CSPH*2412A** | 1.01 | 1.01 | 59*P5A040E14**10 |
| CSPH*3012A** | 1.00 | 0.98 | 59*P5A040E14**10 |
| CAP**2417A** | 0.98 | 0.99 | 59*P5A060E17**14 |
| CAP**3017A** | 0.97 | 0.96 | 59*P5A060E17**14 |
| CNPH*2417A** | 0.98 | 0.99 | 59*P5A060E17**14 |
| CNPH*3017A** | 0.97 | 0.96 | 59*P5A060E17**14 |
| CNPH*3117A** | 0.94 | 0.91 | 59*P5A060E17**14 |
| CNPV*2417A** | 0.98 | 0.99 | 59*P5A060E17**14 |
| CNPV*3017A** | 0.97 | 0.96 | 59*P5A060E17**14 |
| CNPV*3117A** | 0.94 | 0.91 | 59*P5A060E17**14 |
| CSPH*2412A** | 0.97 | 0.99 | 59*P5A060E17**14 |
| CSPH*3012A** | 0.98 | 0.96 | 59*P5A060E17**14 |

See note on pg. 65

# HEAT PUMP HEATING PERFORMANCE CONTINUED

| INDOOR AIR | | OUTDOOR COIL ENTERING AIR TEMPERATURES °F (°C) | | | | | | | | | | | | | | | | | | | | | | | |
|---|---|---|---|---|---|---|---|---|---|---|---|---|---|---|---|---|---|---|---|---|---|---|---|---|---|
| | | −3 (−19.4) | | | 7 (−13.9) | | | 17 (−8.3) | | | 27 (−2.8) | | | 37 (2.8) | | | 47 (8.3) | | | 57 (13.9) | | | 67 (19.4) | | |
| EDB °F (°C) | CFM | Capacity MBtuh | | Total Sys. KW† | Capacity MBtuh | | Total Sys. KW† | Capacity MBtuh | | Total Sys. KW† | Capacity MBtuh | | Total Sys. KW† | Capacity MBtuh | | Total Sys. KW† | Capacity MBtuh | | Total Sys. KW† | Capacity MBtuh | | Total Sys. KW† | Capacity MBtuh | | Total Sys. KW† |
| | | Total | Integ* | | Total | Integ* | | Total | Integ* | | Total | Integ* | | Total | Integ* | | Total | Integ* | | Total | Integ* | | Total | Integ* | |
| 25HCB330A30 Outdoor Section With FY4ANF030 Indoor Section | | | | | | | | | | | | | | | | | | | | | | | | | |
| 65 (18.3) | 875 | 12.02 | 11.06 | 1.89 | 15.08 | 13.85 | 1.97 | 18.33 | 16.72 | 2.07 | 21.82 | 19.38 | 2.18 | 25.66 | 23.35 | 2.31 | 29.99 | 29.99 | 2.47 | 34.77 | 34.77 | 2.64 | 39.32 | 39.32 | 2.79 |
| | 1000 | 12.26 | 11.28 | 1.90 | 15.33 | 14.09 | 1.98 | 18.61 | 16.97 | 2.06 | 22.12 | 19.64 | 2.16 | 26.04 | 23.69 | 2.28 | 30.47 | 30.47 | 2.42 | 35.11 | 35.11 | 2.55 | 39.58 | 39.58 | 2.69 |
| | 1125 | 12.47 | 11.47 | 1.92 | 15.56 | 14.30 | 1.99 | 18.86 | 17.19 | 2.07 | 22.38 | 19.88 | 2.15 | 26.41 | 24.04 | 2.26 | 30.87 | 30.87 | 2.39 | 35.28 | 35.28 | 2.49 | 39.69 | 39.69 | 2.63 |
| 70 (21.1) | 875 | 11.62 | 10.69 | 1.98 | 14.71 | 13.52 | 2.08 | 17.98 | 16.40 | 2.18 | 21.49 | 19.08 | 2.30 | 25.25 | 22.98 | 2.43 | 29.55 | 29.55 | 2.60 | 34.31 | 34.31 | 2.79 | 38.81 | 38.81 | 2.94 |
| | 1000 | 11.85 | 10.91 | 2.00 | 14.97 | 13.76 | 2.08 | 18.26 | 16.65 | 2.17 | 21.79 | 19.35 | 2.28 | 25.64 | 23.33 | 2.40 | 30.00 | 30.00 | 2.55 | 34.70 | 34.70 | 2.69 | 39.17 | 39.17 | 2.83 |
| | 1125 | 12.07 | 11.10 | 2.02 | 15.20 | 13.97 | 2.10 | 18.51 | 16.88 | 2.18 | 22.05 | 19.59 | 2.27 | 25.97 | 23.63 | 2.38 | 30.39 | 30.39 | 2.52 | 34.94 | 34.94 | 2.63 | 39.35 | 39.35 | 2.77 |
| 75 (23.9) | 875 | 11.19 | 10.29 | 2.07 | 14.32 | 13.16 | 2.18 | 17.61 | 16.06 | 2.29 | 21.13 | 18.77 | 2.42 | 24.86 | 22.62 | 2.56 | 29.13 | 29.13 | 2.74 | 33.84 | 33.84 | 2.95 | 38.33 | 38.33 | 3.09 |
| | 1000 | 11.42 | 10.51 | 2.09 | 14.58 | 13.40 | 2.19 | 17.90 | 16.32 | 2.29 | 21.44 | 19.04 | 2.40 | 25.23 | 22.95 | 2.52 | 29.56 | 29.56 | 2.68 | 34.25 | 34.25 | 2.84 | 38.72 | 38.72 | 2.98 |
| | 1125 | 11.64 | 10.70 | 2.12 | 14.82 | 13.61 | 2.20 | 18.15 | 16.55 | 2.29 | 21.72 | 19.29 | 2.39 | 25.55 | 23.25 | 2.50 | 29.93 | 29.93 | 2.65 | 34.55 | 34.55 | 2.78 | 38.96 | 38.96 | 2.91 |

| HEATING INDOOR MODEL | CAPACITY | POWER | FURNACE MODEL |
|---|---|---|---|
| *FB4CNF030 | 1.00 | 1.00 | |
| FB4CNF030 | 1.00 | 1.00 | |
| FB4CNF036 | 1.00 | 1.00 | |
| FB4CNF036 | 1.00 | 1.00 | |
| FE4AN(B,F)003 | 0.99 | 0.99 | |
| FE4ANF002 | 1.00 | 1.01 | |
| FF1ENP030 | 1.00 | 1.05 | |
| FF1ENP031 | 0.99 | 1.03 | |
| FF1ENP036 | 1.00 | 1.03 | |
| FF1ENP037 | 1.00 | 1.02 | |
| FV4BN(B,F)003 | 0.99 | 0.99 | |
| FV4BNF002 | 1.00 | 1.01 | |
| FX4CN(B,F)036 | 1.00 | 0.97 | |
| FX4CNF030 | 1.00 | 0.99 | |
| FX4DN(B,F)031 | 1.00 | 0.97 | |
| FX4DN(B,F)037 | 1.00 | 0.94 | |
| FY4ANF030 | 1.00 | 1.03 | |
| FY4ANF036 | 1.00 | 1.03 | |
| FY5BNF030 | 1.00 | 0.99 | |
| FY5BNF030 | 1.00 | 0.99 | |
| FY5BNF036 | 1.00 | 1.01 | |
| CAP**3014A** | 1.00 | 1.03 | |
| CAP**3017A** | 1.00 | 1.03 | |
| CAP**3614A** | 1.00 | 1.02 | |
| CAP**3617A** | 1.00 | 1.02 | |
| CAP**3619A** | 1.00 | 1.02 | |
| CAP**3621A** | 1.00 | 1.02 | |
| CAP**4823A** | 1.00 | 0.98 | |
| CNPF*3618A** | 1.00 | 1.02 | |
| CNPH*3017A** | 1.00 | 1.02 | |
| CNPH*3117A** | 1.00 | 0.97 | |
| CNPH*3617A** | 1.00 | 1.02 | |
| CNPV*3014A** | 1.00 | 1.02 | |
| CNPV*3017A** | 1.00 | 1.02 | |
| CNPV*3117A** | 1.00 | 0.97 | |
| CNPV*3617A** | 1.00 | 1.02 | |
| CNPV*3621A** | 1.00 | 1.02 | |
| CNPV*3717A** | 1.00 | 0.95 | |
| CSPH*3012A** | 1.00 | 1.02 | |
| CSPH*3612A** | 1.00 | 0.98 | |

| HEATING INDOOR MODEL | CAPACITY | POWER | FURNACE MODEL |
|---|---|---|---|
| CAP**3014A** | 1.00 | 1.04 | 58CV(A,X)070−12 |
| CAP**3614A** | 1.00 | 1.03 | 58CV(A,X)070−12 |
| CNPH*3017A** | 1.00 | 1.03 | 58CV(A,X)070−12 |
| CNPH*3117A** | 1.00 | 0.98 | 58CV(A,X)070−12 |
| CNPH*3617A** | 1.00 | 1.03 | 58CV(A,X)070−12 |
| CNPV*3014A** | 1.00 | 1.03 | 58CV(A,X)070−12 |
| CSPH*3012A** | 1.00 | 1.03 | 58CV(A,X)070−12 |
| CSPH*3612A** | 1.00 | 0.99 | 58CV(A,X)070−12 |
| CAP**3017A** | 0.99 | 1.02 | 58CV(A,X)090−16 |
| CAP**3617A** | 0.99 | 1.02 | 58CV(A,X)090−16 |
| CNPH*3017A** | 0.99 | 1.02 | 58CV(A,X)090−16 |
| CNPH*3117A** | 1.00 | 0.98 | 58CV(A,X)090−16 |
| CNPH*3617A** | 0.99 | 1.02 | 58CV(A,X)090−16 |
| CNPV*3017A** | 0.99 | 1.02 | 58CV(A,X)090−16 |
| CNPV*3117A** | 1.00 | 0.98 | 58CV(A,X)090−16 |
| CNPV*3617A** | 0.99 | 1.02 | 58CV(A,X)090−16 |
| CNPV*3717A** | 1.00 | 0.95 | 58CV(A,X)090−16 |
| CSPH*3012A** | 0.99 | 1.02 | 58CV(A,X)090−16 |
| CSPH*3612A** | 1.00 | 0.99 | 58CV(A,X)090−16 |
| CAP**3621A** | 0.99 | 1.00 | 58CV(A,X)110−20 |
| CNPH*3017A** | 0.99 | 1.02 | 58CV(A,X)110−20 |
| CNPH*3117A** | 1.00 | 0.97 | 58CV(A,X)110−20 |
| CNPH*3617A** | 0.99 | 1.02 | 58CV(A,X)110−20 |
| CNPV*3621A** | 0.99 | 1.02 | 58CV(A,X)110−20 |
| CSPH*3012A** | 1.00 | 1.02 | 58CV(A,X)110−20 |
| CSPH*3612A** | 1.00 | 0.98 | 58CV(A,X)110−20 |
| CNPH*3017A** | 0.99 | 1.02 | 58CV(A,X)135−22 |
| CNPH*3117A** | 1.00 | 0.97 | 58CV(A,X)135−22 |
| CNPH*3617A** | 0.99 | 1.02 | 58CV(A,X)135−22 |
| CSPH*3012A** | 1.00 | 1.02 | 58CV(A,X)135−22 |
| CSPH*3612A** | 1.00 | 0.98 | 58CV(A,X)135−22 |
| CNPH*3017A** | 0.99 | 1.01 | 58CV(A,X)155−22 |
| CNPH*3117A** | 1.00 | 0.97 | 58CV(A,X)155−22 |
| CNPH*3617A** | 0.99 | 1.01 | 58CV(A,X)155−22 |
| CSPH*3012A** | 1.00 | 1.02 | 58CV(A,X)155−22 |
| CSPH*3612A** | 1.00 | 0.98 | 58CV(A,X)155−22 |
| CAP**3619A** | 1.00 | 1.02 | 58HDV040−−12 |
| CAP**4823A** | 1.00 | 0.97 | 58HDV040−−12 |
| CNPH*3017A** | 1.00 | 1.03 | 58HDV040−−12 |
| CNPH*3117A** | 1.00 | 0.97 | 58HDV040−−12 |

| HEATING INDOOR MODEL | CAPACITY | POWER | FURNACE MODEL |
|---|---|---|---|
| CNPH*3617A** | 1.00 | 1.03 | 58HDV040−−12 |
| CNPV*3017A** | 1.00 | 1.03 | 58HDV040−−12 |
| CNPV*3117A** | 1.00 | 0.97 | 58HDV040−−12 |
| CNPV*3617A** | 1.00 | 1.03 | 58HDV040−−12 |
| CNPV*3621A** | 1.00 | 1.03 | 58HDV040−−12 |
| CNPV*3717A** | 1.00 | 0.95 | 58HDV040−−12 |
| CSPH*3012A** | 1.00 | 1.03 | 58HDV040−−12 |
| CSPH*3612A** | 0.99 | 0.98 | 58HDV040−−12 |
| CAP**3619A** | 1.00 | 1.00 | 58HDV060−−12 |
| CAP**4823A** | 1.00 | 0.95 | 58HDV060−−12 |
| CNPH*3017A** | 1.00 | 1.02 | 58HDV060−−12 |
| CNPH*3117A** | 1.00 | 0.96 | 58HDV060−−12 |
| CNPH*3617A** | 1.00 | 1.02 | 58HDV060−−12 |
| CNPV*3017A** | 1.00 | 1.02 | 58HDV060−−12 |
| CNPV*3117A** | 1.00 | 0.96 | 58HDV060−−12 |
| CNPV*3617A** | 1.00 | 1.02 | 58HDV060−−12 |
| CNPV*3621A** | 1.00 | 1.01 | 58HDV060−−12 |
| CNPV*3717A** | 1.00 | 0.93 | 58HDV060−−12 |
| CSPH*3012A** | 1.00 | 1.02 | 58HDV060−−12 |
| CSPH*3612A** | 0.99 | 0.97 | 58HDV060−−12 |
| CNPH*3017A** | 1.00 | 0.99 | 58HDV080−−20 |
| CNPH*3617A** | 1.00 | 0.99 | 58HDV080−−20 |
| CNPV*3621A** | 1.00 | 0.99 | 58HDV080−−20 |
| CSPH*3012A** | 1.00 | 0.99 | 58HDV080−−20 |
| CSPH*3612A** | 0.99 | 0.94 | 58HDV080−−20 |
| CNPH*3017A** | 1.00 | 1.01 | 58HDV100−−20 |
| CNPH*3617A** | 1.00 | 1.01 | 58HDV100−−20 |
| CSPH*3012A** | 1.00 | 1.02 | 58HDV100−−20 |
| CSPH*3612A** | 0.99 | 0.95 | 58HDV100−−20 |
| CAP**3017A** | 1.00 | 0.99 | 58ME(B,C)060−12 |
| CAP**3617A** | 1.00 | 0.98 | 58ME(B,C)060−12 |
| CNPH*3017A** | 1.00 | 0.99 | 58ME(B,C)060−12 |
| CNPH*3117A** | 1.00 | 0.94 | 58ME(B,C)060−12 |
| CNPH*3617A** | 1.00 | 0.99 | 58ME(B,C)060−12 |
| CNPV*3017A** | 1.00 | 0.99 | 58ME(B,C)060−12 |
| CNPV*3117A** | 1.00 | 0.94 | 58ME(B,C)060−12 |
| CNPV*3617A** | 1.00 | 0.99 | 58ME(B,C)060−12 |
| CNPV*3717A** | 1.00 | 0.90 | 58ME(B,C)060−12 |
| CSPH*3012A** | 1.00 | 1.00 | 58ME(B,C)060−12 |
| CSPH*3612A** | 0.98 | 0.93 | 58ME(B,C)060−12 |

# HEAT PUMP HEATING PERFORMANCE CONTINUED

**25HCB330A30 Outdoor Section With FY4ANF030 Indoor Section**

| HEATING INDOOR MODEL | CAPACITY | POWER | FURNACE MODEL |
|---|---|---|---|
| CAP**3017A** | 0.99 | 1.00 | 58ME(B,C)080–12 |
| CAP**3617A** | 1.00 | 0.99 | 58ME(B,C)080–12 |
| CNPH*3017A** | 0.99 | 0.99 | 58ME(B,C)080–12 |
| CNPH*3117A** | 1.00 | 0.95 | 58ME(B,C)080–12 |
| CNPH*3617A** | 0.99 | 0.99 | 58ME(B,C)080–12 |
| CNPV*3017A** | 0.99 | 0.99 | 58ME(B,C)080–12 |
| CNPV*3117A** | 1.00 | 0.95 | 58ME(B,C)080–12 |
| CNPV*3617A** | 0.99 | 0.99 | 58ME(B,C)080–12 |
| CNPV*3717A** | 1.00 | 0.92 | 58ME(B,C)080–12 |
| CSPH*3012A** | 0.99 | 1.00 | 58ME(B,C)080–12 |
| CSPH*3612A** | 0.98 | 0.94 | 58ME(B,C)080–12 |
| CAP**3017A** | 1.00 | 0.98 | 58ME(B,C)080–16 |
| CAP**3617A** | 1.00 | 0.98 | 58ME(B,C)080–16 |
| CNPH*3017A** | 1.00 | 0.99 | 58ME(B,C)080–16 |
| CNPH*3117A** | 1.00 | 0.93 | 58ME(B,C)080–16 |
| CNPH*3617A** | 1.00 | 0.99 | 58ME(B,C)080–16 |
| CNPV*3017A** | 1.00 | 0.99 | 58ME(B,C)080–16 |
| CNPV*3117A** | 1.00 | 0.93 | 58ME(B,C)080–16 |
| CNPV*3617A** | 1.00 | 0.99 | 58ME(B,C)080–16 |
| CNPV*3717A** | 1.00 | 0.90 | 58ME(B,C)080–16 |
| CSPH*3012A** | 1.00 | 0.99 | 58ME(B,C)080–16 |
| CSPH*3612A** | 0.99 | 0.93 | 58ME(B,C)080–16 |
| CAP**3017A** | 0.99 | 0.99 | 58MEB040–12 |
| CAP**3617A** | 1.00 | 0.98 | 58MEB040–12 |
| CNPH*3017A** | 0.99 | 0.99 | 58MEB040–12 |
| CNPH*3117A** | 1.00 | 0.94 | 58MEB040–12 |
| CNPH*3617A** | 0.99 | 0.99 | 58MEB040–12 |
| CNPV*3017A** | 0.99 | 0.99 | 58MEB040–12 |
| CNPV*3117A** | 1.00 | 0.94 | 58MEB040–12 |
| CNPV*3617A** | 0.99 | 0.99 | 58MEB040–12 |
| CNPV*3717A** | 1.00 | 0.91 | 58MEB040–12 |
| CSPH*3012A** | 0.99 | 0.99 | 58MEB040–12 |
| CSPH*3612A** | 0.98 | 0.93 | 58MEB040–12 |
| CNPH*3017A** | 1.00 | 1.03 | 58MV(B,C)040–14 |
| CNPH*3617A** | 1.00 | 1.03 | 58MV(B,C)040–14 |
| CSPH*3012A** | 1.00 | 1.03 | 58MV(B,C)040–14 |
| CSPH*3612A** | 1.00 | 1.00 | 58MV(B,C)040–14 |
| CAP**3017A** | 0.99 | 1.03 | 58MV(B,C)060–14 |
| CAP**3617A** | 0.99 | 1.02 | 58MV(B,C)060–14 |
| CNPH*3017A** | 0.99 | 1.03 | 58MV(B,C)060–14 |
| CNPH*3117A** | 1.00 | 0.96 | 58MV(B,C)060–14 |
| CNPH*3617A** | 0.99 | 1.03 | 58MV(B,C)060–14 |
| CNPV*3017A** | 0.99 | 1.03 | 58MV(B,C)060–14 |
| CNPV*3117A** | 1.00 | 0.96 | 58MV(B,C)060–14 |
| CNPV*3617A** | 0.99 | 1.03 | 58MV(B,C)060–14 |
| CNPV*3717A** | 1.00 | 0.93 | 58MV(B,C)060–14 |
| CSPH*3012A** | 1.00 | 1.03 | 58MV(B,C)060–14 |
| CSPH*3612A** | 1.00 | 1.00 | 58MV(B,C)060–14 |
| CAP**3621A** | 1.00 | 1.02 | 58MV(B,C)080–14 |
| CNPH*3017A** | 1.00 | 1.03 | 58MV(B,C)080–14 |
| CNPH*3117A** | 1.00 | 0.99 | 58MV(B,C)080–14 |
| CNPH*3617A** | 1.00 | 1.03 | 58MV(B,C)080–14 |
| CNPV*3621A** | 1.00 | 1.03 | 58MV(B,C)080–14 |
| CSPH*3012A** | 1.00 | 1.03 | 58MV(B,C)080–14 |

| HEATING INDOOR MODEL | CAPACITY | POWER | FURNACE MODEL |
|---|---|---|---|
| CSPH*3612A** | 1.00 | 0.99 | 58MV(B,C)080–14 |
| CAP**3621A** | 0.99 | 1.02 | 58MV(B,C)080–20 |
| CNPH*3017A** | 1.00 | 1.03 | 58MV(B,C)080–20 |
| CNPH*3117A** | 1.00 | 0.98 | 58MV(B,C)080–20 |
| CNPH*3617A** | 1.00 | 1.03 | 58MV(B,C)080–20 |
| CNPV*3621A** | 0.99 | 1.02 | 58MV(B,C)080–20 |
| CSPH*3012A** | 1.00 | 1.03 | 58MV(B,C)080–20 |
| CSPH*3612A** | 1.00 | 0.99 | 58MV(B,C)080–20 |
| CAP**3621A** | 0.99 | 1.01 | 58MV(B,C)100–20 |
| CNPH*3017A** | 0.99 | 1.02 | 58MV(B,C)100–20 |
| CNPH*3117A** | 1.00 | 1.00 | 58MV(B,C)100–20 |
| CNPH*3617A** | 0.99 | 1.02 | 58MV(B,C)100–20 |
| CNPV*3621A** | 0.99 | 1.02 | 58MV(B,C)100–20 |
| CSPH*3012A** | 1.00 | 1.02 | 58MV(B,C)100–20 |
| CSPH*3612A** | 1.00 | 0.99 | 58MV(B,C)100–20 |
| CNPH*3017A** | 0.99 | 1.03 | 58MV(B,C)120–20 |
| CNPH*3117A** | 1.00 | 0.97 | 58MV(B,C)120–20 |
| CNPH*3617A** | 0.99 | 1.03 | 58MV(B,C)120–20 |
| CSPH*3012A** | 0.99 | 1.02 | 58MV(B,C)120–20 |
| CSPH*3612A** | 1.00 | 0.99 | 58MV(B,C)120–20 |
| CNPH*3117A** | 1.00 | 0.98 | 58MVB040–14 |
| CAP**3017A** | 1.00 | 1.02 | 58PH*070–16 |
| CAP**3617A** | 1.00 | 1.01 | 58PH*070–16 |
| CNPH*3017A** | 1.00 | 1.02 | 58PH*070–16 |
| CNPH*3117A** | 1.00 | 0.96 | 58PH*070–16 |
| CNPH*3617A** | 1.00 | 1.02 | 58PH*070–16 |
| CNPV*3017A** | 1.00 | 1.02 | 58PH*070–16 |
| CNPV*3117A** | 1.00 | 0.96 | 58PH*070–16 |
| CNPV*3617A** | 1.00 | 1.02 | 58PH*070–16 |
| CNPV*3717A** | 1.00 | 0.93 | 58PH*070–16 |
| CSPH*3012A** | 1.00 | 1.02 | 58PH*070–16 |
| CSPH*3612A** | 0.99 | 0.97 | 58PH*070–16 |
| CAP**3621A** | 1.00 | 0.98 | 58PH*090–16 |
| CNPH*3017A** | 1.00 | 1.01 | 58PH*090–16 |
| CNPH*3117A** | 1.00 | 0.95 | 58PH*090–16 |
| CNPH*3617A** | 1.00 | 1.01 | 58PH*090–16 |
| CNPV*3621A** | 1.00 | 1.01 | 58PH*090–16 |
| CSPH*3012A** | 1.00 | 1.02 | 58PH*090–16 |
| CSPH*3612A** | 0.98 | 0.95 | 58PH*090–16 |
| CAP**3017A** | 0.99 | 1.01 | 58VLR105–12 |
| CAP**3617A** | 0.99 | 1.00 | 58VLR105–12 |
| CNPH*3017A** | 0.99 | 1.01 | 58VLR105–12 |
| CNPH*3617A** | 0.99 | 1.01 | 58VLR105–12 |
| CNPV*3017A** | 0.99 | 1.01 | 58VLR105–12 |
| CNPV*3617A** | 0.99 | 1.01 | 58VLR105–12 |
| CSPH*3012A** | 1.00 | 1.01 | 58VLR105–12 |
| CSPH*3612A** | 1.00 | 0.98 | 58VLR105–12 |
| CAP**3017A** | 0.98 | 1.03 | 58VMR105–12 |
| CAP**3617A** | 0.99 | 1.03 | 58VMR105–12 |
| CNPH*3017A** | 0.99 | 1.03 | 58VMR105–12 |
| CNPH*3617A** | 0.99 | 1.03 | 58VMR105–12 |
| CNPV*3017A** | 0.99 | 1.03 | 58VMR105–12 |
| CNPV*3617A** | 0.99 | 1.03 | 58VMR105–12 |
| CSPH*3012A** | 0.99 | 1.03 | 58VMR105–12 |

| HEATING INDOOR MODEL | CAPACITY | POWER | FURNACE MODEL |
|---|---|---|---|
| CSPH*3612A** | 0.99 | 1.00 | 58VMR105–12 |
| CAP**3017A** | 0.99 | 1.02 | OVLAAB036098 |
| CAP**3617A** | 0.99 | 1.02 | OVLAAB036098 |
| CNPH*3017A** | 0.99 | 1.02 | OVLAAB036098 |
| CNPH*3117A** | 1.00 | 0.98 | OVLAAB036098 |
| CNPH*3617A** | 0.99 | 1.02 | OVLAAB036098 |
| CNPV*3017A** | 0.99 | 1.02 | OVLAAB036098 |
| CNPV*3117A** | 1.00 | 0.98 | OVLAAB036098 |
| CNPV*3617A** | 0.99 | 1.02 | OVLAAB036098 |
| CNPV*3717A** | 1.00 | 0.95 | OVLAAB036098 |
| CSPH*3012A** | 1.00 | 1.01 | OVLAAB036098 |
| CSPH*3612A** | 1.00 | 0.99 | OVLAAB036098 |
| CAP**3621A** | 1.00 | 0.99 | OVLAAB048112 |
| CNPH*3017A** | 1.00 | 1.01 | OVLAAB048112 |
| CNPH*3117A** | 1.00 | 0.95 | OVLAAB048112 |
| CNPH*3617A** | 1.00 | 1.01 | OVLAAB048112 |
| CSPH*3012A** | 1.00 | 0.99 | OVLAAB048112 |
| CSPH*3612A** | 1.00 | 0.97 | OVLAAB048112 |
| CAP**3017A** | 1.00 | 1.03 | OVMAAB036098 |
| CAP**3617A** | 1.00 | 1.02 | OVMAAB036098 |
| CNPH*3017A** | 1.00 | 1.03 | OVMAAB036098 |
| CNPH*3117A** | 1.00 | 0.97 | OVMAAB036098 |
| CNPH*3617A** | 1.00 | 1.03 | OVMAAB036098 |
| CNPV*3017A** | 1.00 | 1.03 | OVMAAB036098 |
| CNPV*3117A** | 1.00 | 0.97 | OVMAAB036098 |
| CNPV*3617A** | 1.00 | 1.03 | OVMAAB036098 |
| CNPV*3717A** | 1.00 | 0.95 | OVMAAB036098 |
| CSPH*3012A** | 1.00 | 1.01 | OVMAAB036098 |
| CSPH*3612A** | 1.00 | 0.99 | OVMAAB036098 |
| CAP**3017A** | 0.99 | 1.01 | OVMAAB042112 |
| CAP**3617A** | 0.99 | 1.00 | OVMAAB042112 |
| CNPH*3017A** | 0.99 | 1.00 | OVMAAB042112 |
| CNPH*3117A** | 1.00 | 0.96 | OVMAAB042112 |
| CNPH*3617A** | 0.99 | 1.00 | OVMAAB042112 |
| CNPV*3017A** | 0.99 | 1.00 | OVMAAB042112 |
| CNPV*3117A** | 1.00 | 0.96 | OVMAAB042112 |
| CNPV*3617A** | 0.99 | 1.00 | OVMAAB042112 |
| CNPV*3717A** | 1.00 | 0.93 | OVMAAB042112 |
| CSPH*3012A** | 1.00 | 1.00 | OVMAAB042112 |
| CSPH*3612A** | 1.00 | 0.97 | OVMAAB042112 |
| CAP**3617A** | 0.99 | 1.02 | 59*N*A060V17**14 |
| CAP**3619A** | 0.99 | 1.02 | 59*N*A060V17**14 |
| CAP**3621A** | 0.99 | 1.01 | 59*N*A060V17**14 |
| CNPH*3017A** | 0.99 | 1.02 | 59*N*A060V17**14 |
| CNPH*3117A** | 1.00 | 0.98 | 59*N*A060V17**14 |
| CNPH*3617A** | 0.99 | 1.02 | 59*N*A060V17**14 |
| CNPV*3017A** | 0.99 | 1.02 | 59*N*A060V17**14 |
| CNPV*3117A** | 1.00 | 0.98 | 59*N*A060V17**14 |
| CNPV*3617A** | 0.99 | 1.02 | 59*N*A060V17**14 |
| CNPV*3621A** | 0.99 | 1.02 | 59*N*A060V17**14 |
| CNPV*3717A** | 0.99 | 0.95 | 59*N*A060V17**14 |
| CSPH*3012A** | 0.99 | 1.01 | 59*N*A060V17**14 |
| CSPH*3612A** | 0.99 | 0.99 | 59*N*A060V17**14 |

# HEAT PUMP HEATING PERFORMANCE CONTINUED

**25HCB330A30 Outdoor Section With FY4ANF030 Indoor Section**

| HEATING INDOOR MODEL | CAPACITY | POWER | FURNACE MODEL |
|---|---|---|---|
| CAP**3017A** | 0.99 | 1.01 | 59*N*A080V17**14 |
| CAP**3617A** | 0.99 | 1.00 | 59*N*A080V17**14 |
| CAP**3619A** | 0.99 | 1.00 | 59*N*A080V17**14 |
| CAP**3621A** | 0.99 | 1.00 | 59*N*A080V17**14 |
| CNPH*3017A** | 0.99 | 1.00 | 59*N*A080V17**14 |
| CNPH*3117A** | 1.00 | 0.97 | 59*N*A080V17**14 |
| CNPH*3617A** | 0.99 | 1.00 | 59*N*A080V17**14 |
| CNPV*3017A** | 0.99 | 1.00 | 59*N*A080V17**14 |
| CNPV*3117A** | 1.00 | 0.97 | 59*N*A080V17**14 |
| CNPV*3617A** | 0.99 | 1.00 | 59*N*A080V17**14 |
| CNPV*3621A** | 0.99 | 1.00 | 59*N*A080V17**14 |
| CNPV*3717A** | 0.99 | 0.93 | 59*N*A080V17**14 |
| CSPH*3012A** | 0.99 | 0.99 | 59*N*A080V17**14 |
| CSPH*3612A** | 1.00 | 0.98 | 59*N*A080V17**14 |
| CAP**3619A** | 0.99 | 0.99 | 59*N*A100V21**20 |
| CAP**3621A** | 0.99 | 0.99 | 59*N*A100V21**20 |
| CNPH*3017A** | 0.99 | 1.00 | 59*N*A100V21**20 |
| CNPH*3117A** | 1.00 | 0.95 | 59*N*A100V21**20 |
| CNPH*3617A** | 0.99 | 1.00 | 59*N*A100V21**20 |
| CNPV*3621A** | 0.99 | 1.00 | 59*N*A100V21**20 |
| CSPH*3012A** | 1.00 | 0.99 | 59*N*A100V21**20 |
| CSPH*3612A** | 1.00 | 0.97 | 59*N*A100V21**20 |
| CNPH*3017A** | 0.99 | 1.00 | 59*N*A120V24**22 |
| CNPH*3117A** | 0.99 | 0.95 | 59*N*A120V24**22 |
| CNPH*3617A** | 0.99 | 1.00 | 59*N*A120V24**22 |
| CSPH*3012A** | 0.99 | 0.99 | 59*N*A120V24**22 |
| CSPH*3612A** | 0.99 | 0.97 | 59*N*A120V24**22 |
| CAP**3017A** | 0.99 | 1.01 | 59*P5A060E17**14 |
| CAP**3617A** | 0.99 | 1.00 | 59*P5A060E17**14 |
| CAP**3619A** | 0.99 | 1.00 | 59*P5A060E17**14 |
| CAP**3621A** | 1.00 | 0.99 | 59*P5A060E17**14 |
| CNPH*3017A** | 0.99 | 1.00 | 59*P5A060E17**14 |
| CNPH*3117A** | 1.00 | 0.96 | 59*P5A060E17**14 |
| CNPH*3617A** | 0.99 | 1.00 | 59*P5A060E17**14 |
| CNPV*3017A** | 0.99 | 1.00 | 59*P5A060E17**14 |
| CNPV*3117A** | 1.00 | 0.96 | 59*P5A060E17**14 |
| CNPV*3617A** | 0.99 | 1.00 | 59*P5A060E17**14 |
| CNPV*3621A** | 0.99 | 1.00 | 59*P5A060E17**14 |
| CNPV*3717A** | 1.00 | 0.93 | 59*P5A060E17**14 |
| CSPH*3012A** | 1.00 | 1.00 | 59*P5A060E17**14 |
| CSPH*3612A** | 1.01 | 0.98 | 59*P5A060E17**14 |
| CAP**3017A** | 1.00 | 0.99 | 59*P5A080E17**16 |
| CAP**3617A** | 1.00 | 0.99 | 59*P5A080E17**16 |
| CAP**3619A** | 1.00 | 0.99 | 59*P5A080E17**16 |
| CAP**3621A** | 1.01 | 0.98 | 59*P5A080E17**16 |
| CNPH*3017A** | 1.00 | 0.99 | 59*P5A080E17**16 |
| CNPH*3117A** | 1.01 | 0.94 | 59*P5A080E17**16 |
| CNPH*3617A** | 1.00 | 0.99 | 59*P5A080E17**16 |
| CNPV*3017A** | 1.00 | 0.99 | 59*P5A080E17**16 |
| CNPV*3117A** | 1.01 | 0.94 | 59*P5A080E17**16 |
| CNPV*3617A** | 1.00 | 0.99 | 59*P5A080E17**16 |
| CNPV*3621A** | 1.00 | 0.99 | 59*P5A080E17**16 |
| CNPV*3717A** | 1.00 | 0.91 | 59*P5A080E17**16 |

| HEATING INDOOR MODEL | CAPACITY | POWER | FURNACE MODEL |
|---|---|---|---|
| CSPH*3012A** | 1.01 | 0.98 | 59*P5A080E17**16 |
| CSPH*3612A** | 1.01 | 0.96 | 59*P5A080E17**16 |

See note on pg. 65

# HEAT PUMP HEATING PERFORMANCE CONTINUED

| INDOOR AIR | | OUTDOOR COIL ENTERING AIR TEMPERATURES °F (°C) | | | | | | | | | | | | | | | | | | | | | | | |
|---|---|---|---|---|---|---|---|---|---|---|---|---|---|---|---|---|---|---|---|---|---|---|---|---|---|
| | | −3 (−19.4) | | | 7 (−13.9) | | | 17 (−8.3) | | | 27 (−2.8) | | | 37 (2.8) | | | 47 (8.3) | | | 57 (13.9) | | | 67 (19.4) | | |
| EDB °F (°C) | CFM | Capacity MBtuh | | Total Sys. KW† | Capacity MBtuh | | Total Sys. KW† | Capacity MBtuh | | Total Sys. KW† | Capacity MBtuh | | Total Sys. KW† | Capacity MBtuh | | Total Sys. KW† | Capacity MBtuh | | Total Sys. KW† | Capacity MBtuh | | Total Sys. KW† | Capacity MBtuh | | Total Sys. KW† |
| | | Total | Integ* | | Total | Integ* | | Total | Integ* | | Total | Integ* | | Total | Integ* | | Total | Integ* | | Total | Integ* | | Total | Integ* | |
| 25HCB336A30 Outdoor Section With FY4ANF036 Indoor Section | | | | | | | | | | | | | | | | | | | | | | | | | |
| 65 (18.3) | 1050 | 14.39 | 13.24 | 2.21 | 18.06 | 16.60 | 2.32 | 21.96 | 20.02 | 2.43 | 26.08 | 23.17 | 2.56 | 30.79 | 28.02 | 2.71 | 35.73 | 35.73 | 2.85 | 40.33 | 40.33 | 3.00 | 45.07 | 45.07 | 3.17 |
| | 1200 | 14.71 | 13.53 | 2.25 | 18.40 | 16.91 | 2.34 | 22.34 | 20.36 | 2.44 | 26.49 | 23.53 | 2.56 | 31.26 | 28.45 | 2.70 | 35.98 | 35.98 | 2.81 | 40.39 | 40.39 | 2.94 | 44.90 | 44.90 | 3.09 |
| | 1350 | 14.99 | 13.79 | 2.29 | 18.71 | 17.19 | 2.38 | 22.66 | 20.66 | 2.47 | 26.86 | 23.85 | 2.57 | 31.69 | 28.84 | 2.70 | 36.10 | 36.10 | 2.80 | 40.33 | 40.33 | 2.92 | 44.58 | 44.58 | 3.04 |
| 70 (21.1) | 1050 | 13.84 | 12.73 | 2.30 | 17.57 | 16.15 | 2.42 | 21.50 | 19.60 | 2.54 | 25.64 | 22.78 | 2.67 | 30.17 | 27.46 | 2.83 | 35.32 | 35.32 | 2.99 | 39.94 | 39.94 | 3.15 | 44.64 | 44.64 | 3.32 |
| | 1200 | 14.16 | 13.02 | 2.33 | 17.92 | 16.46 | 2.44 | 21.87 | 19.94 | 2.55 | 26.04 | 23.13 | 2.67 | 30.67 | 27.91 | 2.82 | 35.60 | 35.60 | 2.95 | 40.07 | 40.07 | 3.09 | 44.62 | 44.62 | 3.24 |
| | 1350 | 14.45 | 13.29 | 2.37 | 18.22 | 16.75 | 2.48 | 22.20 | 20.24 | 2.58 | 26.40 | 23.45 | 2.69 | 31.12 | 28.32 | 2.82 | 35.80 | 35.80 | 2.93 | 40.08 | 40.08 | 3.06 | 44.43 | 44.43 | 3.19 |
| 75 (23.9) | 1050 | 13.24 | 12.18 | 2.38 | 17.03 | 15.65 | 2.52 | 21.00 | 19.15 | 2.65 | 25.18 | 22.36 | 2.79 | 29.65 | 26.98 | 2.95 | 34.80 | 34.80 | 3.14 | 39.50 | 39.50 | 3.29 | 44.18 | 44.18 | 3.48 |
| | 1200 | 13.56 | 12.47 | 2.42 | 17.38 | 15.98 | 2.54 | 21.38 | 19.49 | 2.66 | 25.59 | 22.73 | 2.79 | 30.13 | 27.42 | 2.94 | 35.27 | 35.27 | 3.09 | 39.71 | 39.71 | 3.23 | 44.27 | 44.27 | 3.39 |
| | 1350 | 13.85 | 12.74 | 2.46 | 17.70 | 16.26 | 2.58 | 21.72 | 19.80 | 2.69 | 25.94 | 23.04 | 2.81 | 30.55 | 27.80 | 2.95 | 35.47 | 35.47 | 3.07 | 39.79 | 39.79 | 3.20 | 44.18 | 44.18 | 3.34 |

| HEATING INDOOR MODEL | CAPACITY | POWER | FURNACE MODEL |
|---|---|---|---|
| *FY5BNF036 | 1.00 | 1.00 | |
| FB4CNF036 | 1.00 | 1.01 | |
| FB4CNF036 | 1.03 | 1.04 | |
| FB4CNF042 | 1.00 | 0.94 | |
| FB4CNF042 | 1.01 | 0.94 | |
| FE4AN(B,F)003 | 1.01 | 1.00 | |
| FE4ANF002 | 1.02 | 1.02 | |
| FF1ENP036 | 1.04 | 1.06 | |
| FF1ENP037 | 1.02 | 1.03 | |
| FV4BN(B,F)003 | 1.01 | 1.00 | |
| FV4BNF002 | 1.02 | 1.02 | |
| FX4CN(B,F)036 | 1.03 | 1.00 | |
| FX4CN(B,F)042 | 1.01 | 0.96 | |
| FX4DN(B,F)037 | 1.01 | 0.94 | |
| FX4DN(B,F)043 | 1.01 | 0.94 | |
| FY4ANF036 | 1.05 | 1.06 | |
| FY4ANF042 | 1.02 | 1.02 | |
| FY5BNF036 | 1.04 | 1.03 | |
| FY5BNF042 | 1.00 | 0.97 | |
| FY5BNF042 | 1.02 | 0.99 | |
| CAP**3614A** | 1.04 | 1.06 | |
| CAP**3617A** | 1.04 | 1.05 | |
| CAP**3619A** | 1.04 | 1.05 | |
| CAP**3621A** | 1.04 | 1.05 | |
| CAP**4221A** | 1.04 | 1.04 | |
| CAP**4224A** | 1.04 | 1.04 | |
| CAP**4823A** | 1.01 | 1.00 | |
| CNPF*3618A** | 1.04 | 1.06 | |
| CNPH*3617A** | 1.04 | 1.06 | |
| CNPH*4221A** | 1.04 | 1.04 | |
| CNPH*4321A** | 1.02 | 0.99 | |
| CNPV*3617A** | 1.04 | 1.06 | |
| CNPV*3621A** | 1.04 | 1.06 | |
| CNPV*3717A** | 1.02 | 0.99 | |
| CNPV*4217A** | 1.04 | 1.01 | |
| CNPV*4221A** | 1.04 | 1.04 | |
| CNPV*4324A** | 1.02 | 0.99 | |
| CSPH*3612A** | 1.04 | 1.01 | |
| CSPH*4212A** | 1.02 | 0.99 | |
| CAP**3614A** | 1.02 | 1.04 | 58CV(A,X)070−12 |

| HEATING INDOOR MODEL | CAPACITY | POWER | FURNACE MODEL |
|---|---|---|---|
| CNPH*3617A** | 1.01 | 1.04 | 58CV(A,X)070−12 |
| CNPH*4221A** | 1.02 | 1.02 | 58CV(A,X)070−12 |
| CNPH*4321A** | 1.01 | 0.95 | 58CV(A,X)070−12 |
| CSPH*3612A** | 1.02 | 1.00 | 58CV(A,X)070−12 |
| CSPH*4212A** | 1.01 | 0.97 | 58CV(A,X)070−12 |
| CAP**3617A** | 1.01 | 1.02 | 58CV(A,X)090−16 |
| CNPH*3617A** | 1.01 | 1.03 | 58CV(A,X)090−16 |
| CNPH*4221A** | 1.01 | 1.00 | 58CV(A,X)090−16 |
| CNPH*4321A** | 1.01 | 0.94 | 58CV(A,X)090−16 |
| CNPV*3617A** | 1.01 | 1.03 | 58CV(A,X)090−16 |
| CNPV*3717A** | 1.01 | 0.94 | 58CV(A,X)090−16 |
| CNPV*4217A** | 1.01 | 0.98 | 58CV(A,X)090−16 |
| CSPH*3612A** | 1.01 | 0.97 | 58CV(A,X)090−16 |
| CSPH*4212A** | 1.01 | 0.96 | 58CV(A,X)090−16 |
| CAP**3621A** | 1.01 | 1.01 | 58CV(A,X)110−20 |
| CAP**4221A** | 1.01 | 0.99 | 58CV(A,X)110−20 |
| CNPH*3617A** | 1.01 | 1.03 | 58CV(A,X)110−20 |
| CNPH*4221A** | 1.01 | 1.00 | 58CV(A,X)110−20 |
| CNPH*4321A** | 1.01 | 0.93 | 58CV(A,X)110−20 |
| CNPV*3621A** | 1.01 | 1.02 | 58CV(A,X)110−20 |
| CNPV*4221A** | 1.01 | 1.00 | 58CV(A,X)110−20 |
| CSPH*3612A** | 1.01 | 0.97 | 58CV(A,X)110−20 |
| CSPH*4212A** | 1.01 | 0.95 | 58CV(A,X)110−20 |
| CAP**4224A** | 1.01 | 0.98 | 58CV(A,X)135−22 |
| CNPH*3617A** | 1.01 | 1.03 | 58CV(A,X)135−22 |
| CNPH*4221A** | 1.01 | 1.00 | 58CV(A,X)135−22 |
| CNPH*4321A** | 1.00 | 0.93 | 58CV(A,X)135−22 |
| CNPV*4324A** | 1.00 | 0.92 | 58CV(A,X)135−22 |
| CSPH*3612A** | 1.01 | 0.97 | 58CV(A,X)135−22 |
| CSPH*4212A** | 1.01 | 0.95 | 58CV(A,X)135−22 |
| CAP**4224A** | 1.01 | 0.98 | 58CV(A,X)155−22 |
| CNPH*3617A** | 1.01 | 1.02 | 58CV(A,X)155−22 |
| CNPH*4221A** | 1.01 | 0.98 | 58CV(A,X)155−22 |
| CNPH*4321A** | 1.00 | 0.92 | 58CV(A,X)155−22 |
| CNPV*4324A** | 1.00 | 0.92 | 58CV(A,X)155−22 |
| CSPH*3612A** | 1.01 | 0.96 | 58CV(A,X)155−22 |
| CSPH*4212A** | 1.00 | 0.94 | 58CV(A,X)155−22 |
| CAP**4823A** | 1.01 | 0.99 | 58HDV040−−12 |
| CNPH*4221A** | 1.04 | 1.05 | 58HDV040−−12 |
| CNPH*4321A** | 1.02 | 0.98 | 58HDV040−−12 |

| HEATING INDOOR MODEL | CAPACITY | POWER | FURNACE MODEL |
|---|---|---|---|
| CNPV*3617A** | 1.02 | 1.06 | 58HDV040−−12 |
| CNPV*3621A** | 1.02 | 1.06 | 58HDV040−−12 |
| CNPV*3717A** | 1.01 | 0.98 | 58HDV040−−12 |
| CNPV*4217A** | 1.02 | 1.02 | 58HDV040−−12 |
| CNPV*4221A** | 1.02 | 1.03 | 58HDV040−−12 |
| CSPH*3612A** | 1.04 | 1.02 | 58HDV040−−12 |
| CSPH*4212A** | 1.02 | 1.00 | 58HDV040−−12 |
| CAP**3619A** | 1.03 | 1.04 | 58HDV060−−12 |
| CAP**4823A** | 1.00 | 0.97 | 58HDV060−−12 |
| CNPH*3617A** | 1.03 | 1.05 | 58HDV060−−12 |
| CNPH*4221A** | 1.04 | 1.02 | 58HDV060−−12 |
| CNPH*4321A** | 1.01 | 0.95 | 58HDV060−−12 |
| CNPV*3617A** | 1.02 | 1.04 | 58HDV060−−12 |
| CNPV*3621A** | 1.02 | 1.04 | 58HDV060−−12 |
| CNPV*3717A** | 1.01 | 0.95 | 58HDV060−−12 |
| CNPV*4217A** | 1.02 | 1.00 | 58HDV060−−12 |
| CNPV*4221A** | 1.02 | 1.01 | 58HDV060−−12 |
| CSPH*3612A** | 1.04 | 1.00 | 58HDV060−−12 |
| CSPH*4212A** | 1.02 | 0.98 | 58HDV060−−12 |
| CAP**4823A** | 1.00 | 0.94 | 58HDV080−−20 |
| CNPH*3617A** | 1.03 | 1.02 | 58HDV080−−20 |
| CNPH*4221A** | 1.04 | 0.99 | 58HDV080−−20 |
| CNPH*4321A** | 1.01 | 0.92 | 58HDV080−−20 |
| CNPV*3621A** | 1.02 | 1.01 | 58HDV080−−20 |
| CNPV*4221A** | 1.02 | 0.98 | 58HDV080−−20 |
| CNPV*4324A** | 1.00 | 0.91 | 58HDV080−−20 |
| CSPH*3612A** | 1.04 | 0.97 | 58HDV080−−20 |
| CSPH*4212A** | 1.02 | 0.94 | 58HDV080−−20 |
| CAP**4224A** | 1.02 | 0.98 | 58HDV100−−20 |
| CNPH*3617A** | 1.02 | 1.02 | 58HDV100−−20 |
| CNPH*4221A** | 1.02 | 0.99 | 58HDV100−−20 |
| CNPH*4321A** | 1.01 | 0.92 | 58HDV100−−20 |
| CNPV*4324A** | 1.00 | 0.91 | 58HDV100−−20 |
| CNPV*4324A** | 1.01 | 0.92 | 58HDV100−−20 |
| CSPH*3612A** | 1.02 | 0.97 | 58HDV100−−20 |
| CSPH*4212A** | 1.01 | 0.94 | 58HDV100−−20 |
| CAP**3617A** | 1.02 | 1.01 | 58ME(B,C)060−12 |
| CNPH*3617A** | 1.02 | 1.02 | 58ME(B,C)060−12 |
| CNPH*4221A** | 1.02 | 0.99 | 58ME(B,C)060−12 |
| CNPH*4321A** | 1.01 | 0.92 | 58ME(B,C)060−12 |

# HEAT PUMP HEATING PERFORMANCE CONTINUED

**25HCB336A30 Outdoor Section With FY4ANF036 Indoor Section**

| HEATING INDOOR MODEL | CAPACITY | POWER | FURNACE MODEL |
|---|---|---|---|
| CNPV*3617A** | 1.02 | 1.02 | 58ME(B,C)060–12 |
| CNPV*3717A** | 1.01 | 0.93 | 58ME(B,C)060–12 |
| CNPV*4217A** | 1.02 | 0.97 | 58ME(B,C)060–12 |
| CSPH*3612A** | 1.02 | 0.96 | 58ME(B,C)060–12 |
| CSPH*4212A** | 1.00 | 0.93 | 58ME(B,C)060–12 |
| CAP**3617A** | 1.02 | 1.01 | 58ME(B,C)080–12 |
| CNPH*3617A** | 1.02 | 1.03 | 58ME(B,C)080–12 |
| CNPH*4221A** | 1.02 | 0.99 | 58ME(B,C)080–12 |
| CNPH*4321A** | 1.01 | 0.93 | 58ME(B,C)080–12 |
| CNPV*3617A** | 1.02 | 1.03 | 58ME(B,C)080–12 |
| CNPV*3717A** | 1.01 | 0.93 | 58ME(B,C)080–12 |
| CNPV*4217A** | 1.01 | 0.97 | 58ME(B,C)080–12 |
| CSPH*3612A** | 1.02 | 0.97 | 58ME(B,C)080–12 |
| CSPH*4212A** | 1.00 | 0.94 | 58ME(B,C)080–12 |
| CAP**3617A** | 1.02 | 1.01 | 58ME(B,C)080–16 |
| CNPH*3617A** | 1.02 | 1.02 | 58ME(B,C)080–16 |
| CNPH*4221A** | 1.02 | 0.99 | 58ME(B,C)080–16 |
| CNPH*4321A** | 1.01 | 0.93 | 58ME(B,C)080–16 |
| CNPV*3617A** | 1.02 | 1.02 | 58ME(B,C)080–16 |
| CNPV*3717A** | 1.01 | 0.93 | 58ME(B,C)080–16 |
| CNPV*4217A** | 1.02 | 0.97 | 58ME(B,C)080–16 |
| CSPH*3612A** | 1.02 | 0.96 | 58ME(B,C)080–16 |
| CSPH*4212A** | 1.00 | 0.94 | 58ME(B,C)080–16 |
| CAP**3621A** | 1.01 | 1.00 | 58ME(B,C)100–20 |
| CAP**4221A** | 1.01 | 0.98 | 58ME(B,C)100–20 |
| CNPH*3617A** | 1.01 | 1.02 | 58ME(B,C)100–20 |
| CNPH*4221A** | 1.01 | 0.99 | 58ME(B,C)100–20 |
| CNPH*4321A** | 1.00 | 0.92 | 58ME(B,C)100–20 |
| CNPV*3621A** | 1.01 | 1.02 | 58ME(B,C)100–20 |
| CNPV*4221A** | 1.01 | 0.99 | 58ME(B,C)100–20 |
| CSPH*3612A** | 1.01 | 0.96 | 58ME(B,C)100–20 |
| CSPH*4212A** | 1.00 | 0.94 | 58ME(B,C)100–20 |
| CAP**3617A** | 1.02 | 1.01 | 58MEB040–12 |
| CNPH*3617A** | 1.02 | 1.02 | 58MEB040–12 |
| CNPH*4221A** | 1.02 | 0.99 | 58MEB040–12 |
| CNPH*4321A** | 1.01 | 0.92 | 58MEB040–12 |
| CNPV*3617A** | 1.02 | 1.02 | 58MEB040–12 |
| CNPV*3717A** | 1.01 | 0.93 | 58MEB040–12 |
| CNPV*4217A** | 1.01 | 0.96 | 58MEB040–12 |
| CSPH*3612A** | 1.02 | 0.96 | 58MEB040–12 |
| CSPH*4212A** | 1.00 | 0.94 | 58MEB040–12 |
| CAP**4224A** | 1.01 | 1.01 | 58MV(B,C)040–14 |
| CNPH*3617A** | 1.01 | 1.05 | 58MV(B,C)040–14 |
| CNPH*4221A** | 1.02 | 1.02 | 58MV(B,C)040–14 |
| CSPH*3612A** | 1.02 | 1.00 | 58MV(B,C)040–14 |
| CSPH*4212A** | 1.01 | 0.98 | 58MV(B,C)040–14 |
| CAP**3617A** | 1.01 | 1.03 | 58MV(B,C)060–14 |
| CNPH*3617A** | 1.01 | 1.03 | 58MV(B,C)060–14 |
| CNPH*4221A** | 1.01 | 1.01 | 58MV(B,C)060–14 |
| CNPH*4321A** | 1.01 | 0.93 | 58MV(B,C)060–14 |
| CNPV*3617A** | 1.01 | 1.03 | 58MV(B,C)060–14 |
| CNPV*3717A** | 1.01 | 0.94 | 58MV(B,C)060–14 |
| CNPV*4217A** | 1.02 | 0.97 | 58MV(B,C)060–14 |

| HEATING INDOOR MODEL | CAPACITY | POWER | FURNACE MODEL |
|---|---|---|---|
| CSPH*3612A** | 1.01 | 0.98 | 58MV(B,C)060–14 |
| CSPH*4212A** | 1.01 | 0.96 | 58MV(B,C)060–14 |
| CAP**3621A** | 1.01 | 1.03 | 58MV(B,C)080–14 |
| CAP**4221A** | 1.01 | 1.02 | 58MV(B,C)080–14 |
| CNPH*3617A** | 1.01 | 1.05 | 58MV(B,C)080–14 |
| CNPH*4221A** | 1.02 | 1.02 | 58MV(B,C)080–14 |
| CNPH*4321A** | 1.01 | 0.94 | 58MV(B,C)080–14 |
| CNPV*3621A** | 1.01 | 1.05 | 58MV(B,C)080–14 |
| CNPV*4221A** | 1.02 | 1.02 | 58MV(B,C)080–14 |
| CSPH*3612A** | 1.02 | 1.00 | 58MV(B,C)080–14 |
| CSPH*4212A** | 1.01 | 0.98 | 58MV(B,C)080–14 |
| CAP**3621A** | 1.01 | 1.02 | 58MV(B,C)080–20 |
| CAP**4221A** | 1.01 | 1.01 | 58MV(B,C)080–20 |
| CNPH*3617A** | 1.01 | 1.03 | 58MV(B,C)080–20 |
| CNPH*4221A** | 1.01 | 1.01 | 58MV(B,C)080–20 |
| CNPH*4321A** | 1.01 | 0.94 | 58MV(B,C)080–20 |
| CNPV*3621A** | 1.01 | 1.03 | 58MV(B,C)080–20 |
| CNPV*4221A** | 1.02 | 1.01 | 58MV(B,C)080–20 |
| CSPH*3612A** | 1.01 | 0.98 | 58MV(B,C)080–20 |
| CSPH*4212A** | 1.01 | 0.96 | 58MV(B,C)080–20 |
| CAP**3621A** | 1.01 | 1.02 | 58MV(B,C)100–20 |
| CAP**4221A** | 1.01 | 1.00 | 58MV(B,C)100–20 |
| CNPH*3617A** | 1.01 | 1.03 | 58MV(B,C)100–20 |
| CNPH*4221A** | 1.01 | 1.00 | 58MV(B,C)100–20 |
| CNPH*4321A** | 1.01 | 0.94 | 58MV(B,C)100–20 |
| CNPV*3621A** | 1.01 | 1.03 | 58MV(B,C)100–20 |
| CNPV*4221A** | 1.01 | 1.00 | 58MV(B,C)100–20 |
| CSPH*3612A** | 1.01 | 0.98 | 58MV(B,C)100–20 |
| CSPH*4212A** | 1.01 | 0.96 | 58MV(B,C)100–20 |
| CAP**4224A** | 1.01 | 0.99 | 58MV(B,C)120–20 |
| CNPH*3617A** | 1.01 | 1.03 | 58MV(B,C)120–20 |
| CNPH*4221A** | 1.01 | 1.01 | 58MV(B,C)120–20 |
| CNPH*4321A** | 1.00 | 0.93 | 58MV(B,C)120–20 |
| CNPV*4324A** | 1.00 | 0.93 | 58MV(B,C)120–20 |
| CSPH*3612A** | 1.01 | 0.98 | 58MV(B,C)120–20 |
| CSPH*4212A** | 1.01 | 0.96 | 58MV(B,C)120–20 |
| CNPH*4321A** | 1.01 | 0.95 | 58MVB040–14 |
| CNPV*4324A** | 1.01 | 0.95 | 58MVB040–14 |
| CAP**3614A** | 1.03 | 1.06 | 58PH*045–08 |
| CNPH*3617A** | 1.03 | 1.07 | 58PH*045–08 |
| CNPH*4221A** | 1.03 | 1.04 | 58PH*045–08 |
| CNPH*4321A** | 1.02 | 0.97 | 58PH*045–08 |
| CSPH*3612A** | 1.03 | 1.01 | 58PH*045–08 |
| CSPH*4212A** | 1.01 | 0.98 | 58PH*045–08 |
| CAP**3617A** | 1.02 | 1.03 | 58PH*070–16 |
| CNPH*3617A** | 1.02 | 1.05 | 58PH*070–16 |
| CNPH*4221A** | 1.02 | 1.02 | 58PH*070–16 |
| CNPH*4321A** | 1.01 | 0.95 | 58PH*070–16 |
| CNPV*3617A** | 1.02 | 1.05 | 58PH*070–16 |
| CNPV*3717A** | 1.01 | 0.96 | 58PH*070–16 |
| CNPV*4217A** | 1.02 | 0.99 | 58PH*070–16 |
| CSPH*3612A** | 1.02 | 1.00 | 58PH*070–16 |
| CSPH*4212A** | 1.01 | 0.96 | 58PH*070–16 |

| HEATING INDOOR MODEL | CAPACITY | POWER | FURNACE MODEL |
|---|---|---|---|
| CAP**3621A** | 1.02 | 1.00 | 58PH*090–16 |
| CAP**4221A** | 1.01 | 0.97 | 58PH*090–16 |
| CNPH*3617A** | 1.01 | 1.02 | 58PH*090–16 |
| CNPH*4221A** | 1.02 | 0.99 | 58PH*090–16 |
| CNPH*4321A** | 1.01 | 0.92 | 58PH*090–16 |
| CNPV*3621A** | 1.01 | 1.02 | 58PH*090–16 |
| CNPV*4221A** | 1.02 | 0.99 | 58PH*090–16 |
| CSPH*3612A** | 1.01 | 0.96 | 58PH*090–16 |
| CSPH*4212A** | 1.00 | 0.93 | 58PH*090–16 |
| CAP**3621A** | 1.02 | 0.99 | 58PH*110–20 |
| CAP**4221A** | 1.02 | 0.97 | 58PH*110–20 |
| CNPH*3617A** | 1.01 | 1.01 | 58PH*110–20 |
| CNPH*4221A** | 1.02 | 0.98 | 58PH*110–20 |
| CNPH*4321A** | 1.00 | 0.91 | 58PH*110–20 |
| CNPV*3621A** | 1.02 | 1.01 | 58PH*110–20 |
| CNPV*4221A** | 1.02 | 0.98 | 58PH*110–20 |
| CSPH*3612A** | 1.01 | 0.95 | 58PH*110–20 |
| CSPH*4212A** | 1.00 | 0.93 | 58PH*110–20 |
| CAP**3617A** | 1.02 | 1.02 | 58VLR105–12 |
| CNPH*3617A** | 1.02 | 1.03 | 58VLR105–12 |
| CNPH*4221A** | 1.02 | 1.00 | 58VLR105–12 |
| CNPV*3617A** | 1.02 | 1.03 | 58VLR105–12 |
| CNPV*4217A** | 1.02 | 0.98 | 58VLR105–12 |
| CSPH*3612A** | 1.02 | 0.99 | 58VLR105–12 |
| CSPH*4212A** | 1.02 | 0.96 | 58VLR105–12 |
| CAP**3621A** | 1.00 | 1.00 | 58VLR120–20 |
| CAP**4221A** | 1.01 | 0.98 | 58VLR120–20 |
| CNPH*3617A** | 1.01 | 1.02 | 58VLR120–20 |
| CNPH*4221A** | 1.01 | 0.99 | 58VLR120–20 |
| CNPV*3621A** | 1.00 | 1.01 | 58VLR120–20 |
| CNPV*4221A** | 1.01 | 0.99 | 58VLR120–20 |
| CSPH*3612A** | 1.01 | 0.97 | 58VLR120–20 |
| CSPH*4212A** | 1.01 | 0.95 | 58VLR120–20 |
| CAP**3617A** | 1.01 | 1.03 | 58VMR105–12 |
| CNPH*3617A** | 1.01 | 1.04 | 58VMR105–12 |
| CNPH*4221A** | 0.71 | 0.72 | 58VMR105–12 |
| CNPV*3617A** | 1.01 | 1.04 | 58VMR105–12 |
| CNPV*4217A** | 1.01 | 1.00 | 58VMR105–12 |
| CSPH*3612A** | 0.71 | 0.70 | 58VMR105–12 |
| CSPH*4212A** | 1.01 | 0.98 | 58VMR105–12 |
| CAP**3621A** | 1.01 | 1.02 | 58VMR120–20 |
| CAP**4221A** | 1.01 | 1.00 | 58VMR120–20 |
| CNPH*3617A** | 1.01 | 1.03 | 58VMR120–20 |
| CNPH*4221A** | 1.01 | 1.00 | 58VMR120–20 |
| CNPV*3621A** | 1.01 | 1.03 | 58VMR120–20 |
| CNPV*4221A** | 1.01 | 1.01 | 58VMR120–20 |
| CSPH*3612A** | 1.01 | 0.98 | 58VMR120–20 |
| CSPH*4212A** | 1.01 | 0.97 | 58VMR120–20 |
| CAP**3617A** | 1.01 | 1.04 | OVLAAB036098 |
| CNPH*3617A** | 1.01 | 1.05 | OVLAAB036098 |
| CNPH*4221A** | 1.02 | 1.03 | OVLAAB036098 |
| CNPH*4321A** | 1.01 | 0.96 | OVLAAB036098 |
| CNPV*3617A** | 1.01 | 1.05 | OVLAAB036098 |

# HEAT PUMP HEATING PERFORMANCE CONTINUED

**25HCB336A30 Outdoor Section With FY4ANF036 Indoor Section**

| HEATING INDOOR MODEL | CAPACITY | POWER | FURNACE MODEL |
|---|---|---|---|
| CNPV*3717A** | 1.01 | 0.96 | OVLAAB036098 |
| CNPV*4217A** | 1.02 | 1.01 | OVLAAB036098 |
| CSPH*3612A** | 1.02 | 1.01 | OVLAAB036098 |
| CSPH*4212A** | 1.02 | 0.99 | OVLAAB036098 |
| CAP**3621A** | 1.01 | 1.01 | OVLAAB048112 |
| CAP**4221A** | 1.02 | 1.00 | OVLAAB048112 |
| CNPH*3617A** | 1.02 | 1.03 | OVLAAB048112 |
| CNPH*4221A** | 1.02 | 1.00 | OVLAAB048112 |
| CNPH*4321A** | 1.01 | 0.94 | OVLAAB048112 |
| CNPV*3621A** | 1.02 | 1.03 | OVLAAB048112 |
| CNPV*4221A** | 1.02 | 1.00 | OVLAAB048112 |
| CSPH*3612A** | 1.02 | 0.99 | OVLAAB048112 |
| CSPH*4212A** | 1.02 | 0.97 | OVLAAB048112 |
| CNPH*3617A** | 1.03 | 1.00 | OVLAAB060154 |
| CNPH*4221A** | 1.02 | 0.96 | OVLAAB060154 |
| CNPH*4321A** | 0.99 | 0.90 | OVLAAB060154 |
| CSPH*3612A** | 1.02 | 0.95 | OVLAAB060154 |
| CSPH*4212A** | 1.01 | 0.93 | OVLAAB060154 |
| CAP**3617A** | 1.02 | 1.04 | OVMAAB036098 |
| CNPH*3617A** | 1.02 | 1.05 | OVMAAB036098 |
| CNPH*4221A** | 1.02 | 1.02 | OVMAAB036098 |
| CNPH*4321A** | 1.01 | 0.96 | OVMAAB036098 |
| CNPV*3617A** | 1.02 | 1.05 | OVMAAB036098 |
| CNPV*3717A** | 1.01 | 0.96 | OVMAAB036098 |
| CNPV*4217A** | 1.02 | 1.00 | OVMAAB036098 |
| CSPH*3612A** | 1.02 | 1.01 | OVMAAB036098 |
| CSPH*4212A** | 1.02 | 0.99 | OVMAAB036098 |
| CAP**3617A** | 1.01 | 1.02 | OVMAAB042112 |
| CNPH*3617A** | 1.01 | 1.03 | OVMAAB042112 |
| CNPH*4221A** | 1.01 | 1.00 | OVMAAB042112 |
| CNPH*4321A** | 1.00 | 0.94 | OVMAAB042112 |
| CNPV*3617A** | 1.01 | 1.03 | OVMAAB042112 |
| CNPV*3717A** | 1.00 | 0.94 | OVMAAB042112 |
| CNPV*4217A** | 1.02 | 0.99 | OVMAAB042112 |
| CSPH*3612A** | 1.02 | 0.99 | OVMAAB042112 |
| CSPH*4212A** | 1.01 | 0.97 | OVMAAB042112 |
| CAP**3617A** | 0.97 | 1.02 | 59*N*A060V17**14 |
| CAP**3619A** | 0.97 | 1.02 | 59*N*A060V17**14 |
| CAP**3621A** | 0.97 | 1.01 | 59*N*A060V17**14 |
| CAP**4221A** | 0.97 | 0.99 | 59*N*A060V17**14 |
| CNPH*3617A** | 0.97 | 1.02 | 59*N*A060V17**14 |
| CNPH*4221A** | 0.98 | 1.00 | 59*N*A060V17**14 |
| CNPH*4321A** | 0.97 | 0.94 | 59*N*A060V17**14 |
| CNPV*3617A** | 0.97 | 1.02 | 59*N*A060V17**14 |
| CNPV*3621A** | 0.97 | 1.02 | 59*N*A060V17**14 |
| CNPV*3717A** | 0.97 | 0.94 | 59*N*A060V17**14 |
| CNPV*4217A** | 0.98 | 0.99 | 59*N*A060V17**14 |
| CNPV*4221A** | 0.98 | 1.00 | 59*N*A060V17**14 |
| CSPH*3612A** | 0.98 | 0.99 | 59*N*A060V17**14 |
| CSPH*4212A** | 0.98 | 0.97 | 59*N*A060V17**14 |
| CAP**3617A** | 0.97 | 1.00 | 59*N*A080V17**14 |
| CAP**3619A** | 0.97 | 1.00 | 59*N*A080V17**14 |
| CAP**3621A** | 0.97 | 1.00 | 59*N*A080V17**14 |
| CAP**4221A** | 0.97 | 0.98 | 59*N*A080V17**14 |

| HEATING INDOOR MODEL | CAPACITY | POWER | FURNACE MODEL |
|---|---|---|---|
| CNPH*3617A** | 0.97 | 1.02 | 59*N*A080V17**14 |
| CNPH*4221A** | 0.97 | 0.99 | 59*N*A080V17**14 |
| CNPH*4321A** | 0.97 | 0.93 | 59*N*A080V17**14 |
| CNPV*3617A** | 0.97 | 1.02 | 59*N*A080V17**14 |
| CNPV*3621A** | 0.97 | 1.01 | 59*N*A080V17**14 |
| CNPV*3717A** | 0.97 | 0.93 | 59*N*A080V17**14 |
| CNPV*4217A** | 0.98 | 0.97 | 59*N*A080V17**14 |
| CNPV*4221A** | 0.97 | 0.99 | 59*N*A080V17**14 |
| CSPH*3612A** | 0.98 | 0.97 | 59*N*A080V17**14 |
| CSPH*4212A** | 0.98 | 0.96 | 59*N*A080V17**14 |
| CAP**3619A** | 0.97 | 0.99 | 59*N*A100V21**20 |
| CAP**3621A** | 0.97 | 0.99 | 59*N*A100V21**20 |
| CAP**4221A** | 0.98 | 0.98 | 59*N*A100V21**20 |
| CAP**4224A** | 0.98 | 0.98 | 59*N*A100V21**20 |
| CNPH*3617A** | 0.97 | 1.00 | 59*N*A100V21**20 |
| CNPH*4221A** | 0.98 | 0.98 | 59*N*A100V21**20 |
| CNPH*4321A** | 0.97 | 0.92 | 59*N*A100V21**20 |
| CNPV*3621A** | 0.97 | 1.00 | 59*N*A100V21**20 |
| CNPV*4221A** | 0.98 | 0.98 | 59*N*A100V21**20 |
| CNPV*4324A** | 0.97 | 0.92 | 59*N*A100V21**20 |
| CSPH*3612A** | 0.98 | 0.96 | 59*N*A100V21**20 |
| CSPH*4212A** | 0.98 | 0.95 | 59*N*A100V21**20 |
| CAP**4224A** | 0.97 | 0.97 | 59*N*A120V24**22 |
| CNPH*3617A** | 0.97 | 1.00 | 59*N*A120V24**22 |
| CNPH*4221A** | 0.97 | 0.97 | 59*N*A120V24**22 |
| CNPH*4321A** | 0.97 | 0.91 | 59*N*A120V24**22 |
| CNPV*4324A** | 0.97 | 0.91 | 59*N*A120V24**22 |
| CSPH*3612A** | 0.98 | 0.96 | 59*N*A120V24**22 |
| CSPH*4212A** | 0.98 | 0.94 | 59*N*A120V24**22 |
| CAP**3617A** | 0.98 | 1.00 | 59*P5A060E17**14 |
| CAP**3619A** | 0.98 | 1.00 | 59*P5A060E17**14 |
| CAP**3621A** | 0.99 | 1.00 | 59*P5A060E17**14 |
| CAP**4221A** | 0.99 | 0.98 | 59*P5A060E17**14 |
| CNPH*3617A** | 0.98 | 1.02 | 59*P5A060E17**14 |
| CNPH*4221A** | 0.99 | 0.99 | 59*P5A060E17**14 |
| CNPH*4321A** | 0.98 | 0.93 | 59*P5A060E17**14 |
| CNPV*3617A** | 0.98 | 1.02 | 59*P5A060E17**14 |
| CNPV*3621A** | 0.98 | 1.01 | 59*P5A060E17**14 |
| CNPV*3717A** | 0.98 | 0.93 | 59*P5A060E17**14 |
| CNPV*4217A** | 0.99 | 0.97 | 59*P5A060E17**14 |
| CNPV*4221A** | 0.99 | 0.99 | 59*P5A060E17**14 |
| CSPH*3612A** | 0.99 | 0.97 | 59*P5A060E17**14 |
| CSPH*4212A** | 0.99 | 0.95 | 59*P5A060E17**14 |
| CAP**3617A** | 0.98 | 1.00 | 59*P5A080E17**16 |
| CAP**3619A** | 0.98 | 1.00 | 59*P5A080E17**16 |
| CAP**3621A** | 0.98 | 0.99 | 59*P5A080E17**16 |
| CAP**4221A** | 0.98 | 0.97 | 59*P5A080E17**16 |
| CNPH*3617A** | 0.97 | 1.00 | 59*P5A080E17**16 |
| CNPH*4221A** | 0.98 | 0.98 | 59*P5A080E17**16 |
| CNPH*4321A** | 0.97 | 0.92 | 59*P5A080E17**16 |
| CNPV*3617A** | 0.97 | 1.00 | 59*P5A080E17**16 |
| CNPV*3621A** | 0.97 | 1.00 | 59*P5A080E17**16 |
| CNPV*3717A** | 0.97 | 0.92 | 59*P5A080E17**16 |
| CNPV*4217A** | 0.98 | 0.97 | 59*P5A080E17**16 |

| HEATING INDOOR MODEL | CAPACITY | POWER | FURNACE MODEL |
|---|---|---|---|
| CNPV*4221A** | 0.98 | 0.98 | 59*P5A080E17**16 |
| CSPH*3612A** | 0.98 | 0.96 | 59*P5A080E17**16 |
| CSPH*4212A** | 0.98 | 0.95 | 59*P5A080E17**16 |

See note on pg. 65

# HEAT PUMP HEATING PERFORMANCE CONTINUED

| INDOOR AIR | | OUTDOOR COIL ENTERING AIR TEMPERATURES °F (°C) | | | | | | | | | | | | | | | | | | | | | | | |
|---|---|---|---|---|---|---|---|---|---|---|---|---|---|---|---|---|---|---|---|---|---|---|---|---|---|
| | | −3 (−19.4) | | | 7 (−13.9) | | | 17 (−8.3) | | | 27 (−2.8) | | | 37 (2.8) | | | 47 (8.3) | | | 57 (13.9) | | | 67 (19.4) | | |
| EDB °F (°C) | CFM | Capacity MBtuh | | Total Sys. KW† | Capacity MBtuh | | Total Sys. KW† | Capacity MBtuh | | Total Sys. KW† | Capacity MBtuh | | Total Sys. KW† | Capacity MBtuh | | Total Sys. KW† | Capacity MBtuh | | Total Sys. KW† | Capacity MBtuh | | Total Sys. KW† | Capacity MBtuh | | Total Sys. KW† |
| | | Total | Integ* | | Total | Integ* | | Total | Integ* | | Total | Integ* | | Total | Integ* | | Total | Integ* | | Total | Integ* | | Total | Integ* | |
| 25HCB342A30 Outdoor Section With FY4ANF042 Indoor Section | | | | | | | | | | | | | | | | | | | | | | | | | |
| 65 (18.3) | 1225 | 17.53 | 16.13 | 2.72 | 21.61 | 19.86 | 2.83 | 26.00 | 23.71 | 2.95 | 30.74 | 27.30 | 3.08 | 36.21 | 32.95 | 3.26 | 42.09 | 42.09 | 3.43 | 47.60 | 47.60 | 3.60 | 53.07 | 53.07 | 3.79 |
| | 1400 | 17.88 | 16.45 | 2.75 | 21.99 | 20.20 | 2.85 | 26.39 | 24.06 | 2.96 | 31.20 | 27.71 | 3.08 | 36.75 | 33.44 | 3.25 | 42.44 | 42.44 | 3.38 | 47.57 | 47.57 | 3.53 | 52.73 | 52.73 | 3.69 |
| | 1575 | 18.21 | 16.75 | 2.80 | 22.32 | 20.51 | 2.89 | 26.75 | 24.39 | 2.99 | 31.61 | 28.08 | 3.10 | 37.22 | 33.87 | 3.25 | 42.50 | 42.50 | 3.36 | 47.37 | 47.37 | 3.49 | 52.15 | 52.15 | 3.63 |
| 70 (21.1) | 1225 | 17.06 | 15.69 | 2.84 | 21.17 | 19.45 | 2.96 | 25.58 | 23.32 | 3.09 | 30.29 | 26.90 | 3.23 | 35.68 | 32.47 | 3.42 | 41.58 | 41.58 | 3.60 | 47.11 | 47.11 | 3.77 | 52.62 | 52.62 | 3.98 |
| | 1400 | 17.40 | 16.01 | 2.88 | 21.52 | 19.78 | 2.99 | 25.97 | 23.68 | 3.10 | 30.69 | 27.26 | 3.23 | 36.21 | 32.96 | 3.40 | 42.00 | 42.00 | 3.55 | 47.24 | 47.24 | 3.70 | 52.50 | 52.50 | 3.87 |
| | 1575 | 17.74 | 16.32 | 2.92 | 21.88 | 20.11 | 3.02 | 26.32 | 24.00 | 3.12 | 31.11 | 27.63 | 3.24 | 36.68 | 33.38 | 3.40 | 42.19 | 42.19 | 3.52 | 47.15 | 47.15 | 3.66 | 52.04 | 52.04 | 3.81 |
| 75 (23.9) | 1225 | 16.54 | 15.21 | 2.96 | 20.69 | 19.02 | 3.09 | 25.13 | 22.91 | 3.23 | 29.85 | 26.51 | 3.39 | 35.03 | 31.88 | 3.57 | 41.04 | 41.04 | 3.78 | 46.60 | 46.60 | 3.95 | 52.13 | 52.13 | 4.17 |
| | 1400 | 16.89 | 15.54 | 3.00 | 21.08 | 19.37 | 3.12 | 25.53 | 23.28 | 3.24 | 30.29 | 26.90 | 3.38 | 35.58 | 32.38 | 3.55 | 41.57 | 41.57 | 3.72 | 46.84 | 46.84 | 3.88 | 52.10 | 52.10 | 4.06 |
| | 1575 | 17.21 | 15.83 | 3.05 | 21.41 | 19.67 | 3.16 | 25.90 | 23.62 | 3.27 | 30.67 | 27.24 | 3.40 | 36.15 | 32.90 | 3.56 | 41.81 | 41.81 | 3.69 | 46.84 | 46.84 | 3.84 | 51.83 | 51.83 | 3.99 |

| HEATING INDOOR MODEL | CAPACITY | POWER | FURNACE MODEL |
|---|---|---|---|
| *FY5BNF042 | 1.00 | 1.00 | |
| FB4CNF042 | 1.00 | 0.99 | |
| FB4CNF042 | 1.02 | 1.01 | |
| FB4CNF048 | 1.00 | 0.98 | |
| FB4CNF048 | 1.02 | 1.00 | |
| FE4AN(B,F)003 | 1.00 | 1.03 | |
| FE4AN(B,F)005 | 0.99 | 0.95 | |
| FE4ANB006 | 0.96 | 0.92 | |
| FV4BN(B,F)003 | 1.00 | 1.03 | |
| FV4BN(B,F)005 | 0.99 | 0.95 | |
| FV4BNB006 | 0.96 | 0.92 | |
| FX4CN(B,F)042 | 1.02 | 1.00 | |
| FX4CN(B,F)048 | 0.98 | 0.93 | |
| FX4DN(B,F)043 | 1.02 | 1.00 | |
| FX4DN(B,F)049 | 1.00 | 0.95 | |
| FY4ANF042 | 1.02 | 1.05 | |
| FY4ANF048 | 1.00 | 1.01 | |
| FY5BNF042 | 1.02 | 1.02 | |
| FY5BNF048 | 1.00 | 0.97 | |
| FY5BNF048 | 1.01 | 1.00 | |
| CAP**4221A** | 1.04 | 1.07 | |
| CAP**4224A** | 1.04 | 1.07 | |
| CAP**4817A** | 0.98 | 0.97 | |
| CAP**4821A** | 1.02 | 1.02 | |
| CAP**4823A** | 1.02 | 1.02 | |
| CAP**4824A** | 1.02 | 1.02 | |
| CNPF*4818A** | 1.02 | 1.04 | |
| CNPH*4221A** | 1.04 | 1.07 | |
| CNPH*4321A** | 1.02 | 0.99 | |
| CNPH*4821A** | 1.02 | 1.02 | |
| CNPV*4217A** | 1.02 | 1.04 | |
| CNPV*4221A** | 1.04 | 1.07 | |
| CNPV*4324A** | 1.02 | 0.99 | |
| CNPV*4821A** | 1.02 | 1.02 | |
| CNPV*4824A** | 1.02 | 1.02 | |
| CSPH*4212A** | 1.04 | 1.03 | |
| CSPH*4812A** | 1.00 | 0.98 | |
| CNPH*4221A** | 1.01 | 1.05 | 58CV(A,X)070−12 |
| CNPH*4321A** | 1.02 | 1.00 | 58CV(A,X)070−12 |
| CNPH*4821A** | 1.00 | 1.01 | 58CV(A,X)070−12 |

| HEATING INDOOR MODEL | CAPACITY | POWER | FURNACE MODEL |
|---|---|---|---|
| CSPH*4212A** | 1.01 | 1.02 | 58CV(A,X)070−12 |
| CSPH*4812A** | 1.00 | 1.00 | 58CV(A,X)070−12 |
| CAP**4221A** | 1.01 | 1.05 | 58CV(A,X)090−16 |
| CAP**4817A** | 0.96 | 0.94 | 58CV(A,X)090−16 |
| CNPH*4221A** | 1.00 | 1.02 | 58CV(A,X)090−16 |
| CNPH*4321A** | 1.01 | 0.97 | 58CV(A,X)090−16 |
| CNPH*4821A** | 1.00 | 0.99 | 58CV(A,X)090−16 |
| CNPV*4217A** | 1.01 | 1.03 | 58CV(A,X)090−16 |
| CNPV*4221A** | 1.01 | 1.03 | 58CV(A,X)090−16 |
| CSPH*4212A** | 1.00 | 1.00 | 58CV(A,X)090−16 |
| CSPH*4812A** | 1.00 | 0.98 | 58CV(A,X)090−16 |
| CAP**4221A** | 1.00 | 1.03 | 58CV(A,X)110−20 |
| CAP**4821A** | 1.00 | 0.98 | 58CV(A,X)110−20 |
| CNPH*4221A** | 1.00 | 1.01 | 58CV(A,X)110−20 |
| CNPH*4321A** | 1.01 | 0.97 | 58CV(A,X)110−20 |
| CNPH*4821A** | 1.00 | 0.99 | 58CV(A,X)110−20 |
| CNPV*4221A** | 1.00 | 1.01 | 58CV(A,X)110−20 |
| CNPV*4821A** | 1.00 | 0.99 | 58CV(A,X)110−20 |
| CSPH*4212A** | 1.00 | 0.99 | 58CV(A,X)110−20 |
| CSPH*4812A** | 1.00 | 0.98 | 58CV(A,X)110−20 |
| CAP**4224A** | 1.00 | 1.02 | 58CV(A,X)135−22 |
| CAP**4824A** | 1.00 | 0.98 | 58CV(A,X)135−22 |
| CNPH*4221A** | 1.00 | 1.01 | 58CV(A,X)135−22 |
| CNPH*4321A** | 1.01 | 0.96 | 58CV(A,X)135−22 |
| CNPH*4821A** | 1.00 | 0.98 | 58CV(A,X)135−22 |
| CNPV*4324A** | 1.01 | 0.96 | 58CV(A,X)135−22 |
| CNPV*4824A** | 1.00 | 0.98 | 58CV(A,X)135−22 |
| CSPH*4212A** | 1.00 | 0.99 | 58CV(A,X)135−22 |
| CSPH*4812A** | 1.00 | 0.97 | 58CV(A,X)135−22 |
| CAP**4224A** | 1.00 | 1.02 | 58CV(A,X)155−22 |
| CAP**4824A** | 1.00 | 0.98 | 58CV(A,X)155−22 |
| CNPH*4221A** | 1.00 | 1.01 | 58CV(A,X)155−22 |
| CNPH*4321A** | 1.01 | 0.96 | 58CV(A,X)155−22 |
| CNPH*4821A** | 1.00 | 0.98 | 58CV(A,X)155−22 |
| CNPV*4324A** | 1.01 | 0.96 | 58CV(A,X)155−22 |
| CNPV*4824A** | 1.00 | 0.98 | 58CV(A,X)155−22 |
| CSPH*4212A** | 1.00 | 0.99 | 58CV(A,X)155−22 |
| CSPH*4812A** | 1.00 | 0.98 | 58CV(A,X)155−22 |
| CNPH*4821A** | 1.02 | 1.02 | 58HDV060−−12 |
| CNPV*4217A** | 1.02 | 1.06 | 58HDV060−−12 |

| HEATING INDOOR MODEL | CAPACITY | POWER | FURNACE MODEL |
|---|---|---|---|
| CNPV*4221A** | 1.02 | 1.07 | 58HDV060−−12 |
| CNPV*4821A** | 1.02 | 1.02 | 58HDV060−−12 |
| CSPH*4212A** | 1.02 | 1.03 | 58HDV060−−12 |
| CSPH*4812A** | 1.02 | 1.02 | 58HDV060−−12 |
| CAP**4823A** | 1.01 | 0.99 | 58HDV080−−20 |
| CNPH*4221A** | 1.02 | 1.05 | 58HDV080−−20 |
| CNPH*4321A** | 1.02 | 0.97 | 58HDV080−−20 |
| CNPH*4821A** | 1.02 | 0.99 | 58HDV080−−20 |
| CNPV*4221A** | 1.01 | 1.03 | 58HDV080−−20 |
| CNPV*4324A** | 1.02 | 0.97 | 58HDV080−−20 |
| CNPV*4821A** | 1.02 | 0.99 | 58HDV080−−20 |
| CNPV*4824A** | 1.02 | 0.99 | 58HDV080−−20 |
| CSPH*4212A** | 1.02 | 1.00 | 58HDV080−−20 |
| CSPH*4812A** | 1.02 | 0.99 | 58HDV080−−20 |
| CAP**4224A** | 1.00 | 1.02 | 58HDV100−−20 |
| CAP**4824A** | 0.98 | 0.95 | 58HDV100−−20 |
| CNPH*4221A** | 1.01 | 1.04 | 58HDV100−−20 |
| CNPH*4321A** | 1.02 | 0.98 | 58HDV100−−20 |
| CNPH*4821A** | 1.02 | 1.00 | 58HDV100−−20 |
| CNPV*4324A** | 1.02 | 0.97 | 58HDV100−−20 |
| CNPV*4324A** | 1.02 | 0.97 | 58HDV100−−20 |
| CNPV*4824A** | 1.01 | 0.99 | 58HDV100−−20 |
| CNPV*4824A** | 1.02 | 1.00 | 58HDV100−−20 |
| CSPH*4212A** | 1.02 | 1.01 | 58HDV100−−20 |
| CSPH*4812A** | 1.02 | 1.00 | 58HDV100−−20 |
| CAP**4817A** | 0.98 | 0.95 | 58ME(B,C)060−12 |
| CNPH*4221A** | 1.01 | 1.03 | 58ME(B,C)060−12 |
| CNPH*4321A** | 1.02 | 0.98 | 58ME(B,C)060−12 |
| CNPH*4821A** | 1.02 | 1.00 | 58ME(B,C)060−12 |
| CNPV*4217A** | 1.02 | 1.04 | 58ME(B,C)060−12 |
| CSPH*4212A** | 1.02 | 1.01 | 58ME(B,C)060−12 |
| CSPH*4812A** | 1.02 | 1.00 | 58ME(B,C)060−12 |
| CNPH*4221A** | 1.01 | 1.03 | 58ME(B,C)080−12 |
| CNPH*4321A** | 1.02 | 0.98 | 58ME(B,C)080−12 |
| CNPH*4821A** | 1.02 | 1.00 | 58ME(B,C)080−12 |
| CNPV*4217A** | 1.01 | 1.02 | 58ME(B,C)080−12 |
| CSPH*4212A** | 1.02 | 1.01 | 58ME(B,C)080−12 |
| CSPH*4812A** | 1.02 | 1.00 | 58ME(B,C)080−12 |
| CNPH*4221A** | 1.00 | 1.03 | 58ME(B,C)080−16 |
| CNPH*4321A** | 1.02 | 0.98 | 58ME(B,C)080−16 |

# HEAT PUMP HEATING PERFORMANCE CONTINUED

**25HCB342A30 Outdoor Section With FY4ANF042 Indoor Section**

| HEATING INDOOR MODEL | CAPACITY | POWER | FURNACE MODEL |
|---|---|---|---|
| CNPH*4821A** | 1.01 | 1.00 | 58ME(B,C)080–16 |
| CNPV*4217A** | 1.01 | 1.03 | 58ME(B,C)080–16 |
| CSPH*4212A** | 1.01 | 1.01 | 58ME(B,C)080–16 |
| CSPH*4812A** | 1.01 | 0.99 | 58ME(B,C)080–16 |
| CAP**4221A** | 1.00 | 1.01 | 58ME(B,C)100–20 |
| CAP**4821A** | 0.98 | 0.94 | 58ME(B,C)100–20 |
| CNPH*4221A** | 1.00 | 1.02 | 58ME(B,C)100–20 |
| CNPH*4321A** | 1.01 | 0.95 | 58ME(B,C)100–20 |
| CNPH*4821A** | 1.01 | 0.99 | 58ME(B,C)100–20 |
| CNPV*4221A** | 1.00 | 1.02 | 58ME(B,C)100–20 |
| CNPV*4821A** | 1.01 | 0.99 | 58ME(B,C)100–20 |
| CSPH*4212A** | 1.01 | 0.99 | 58ME(B,C)100–20 |
| CSPH*4812A** | 1.01 | 0.98 | 58ME(B,C)100–20 |
| CAP**4224A** | 1.00 | 1.00 | 58ME(B,C)120–20 |
| CAP**4824A** | 0.98 | 0.94 | 58ME(B,C)120–20 |
| CNPH*4221A** | 1.00 | 1.02 | 58ME(B,C)120–20 |
| CNPH*4321A** | 1.01 | 0.95 | 58ME(B,C)120–20 |
| CNPH*4821A** | 1.01 | 0.97 | 58ME(B,C)120–20 |
| CNPV*4324A** | 1.01 | 0.94 | 58ME(B,C)120–20 |
| CNPV*4824A** | 1.01 | 0.97 | 58ME(B,C)120–20 |
| CSPH*4212A** | 1.01 | 0.99 | 58ME(B,C)120–20 |
| CSPH*4812A** | 1.01 | 0.97 | 58ME(B,C)120–20 |
| CAP**4817A** | 0.98 | 0.95 | 58MEB040–12 |
| CNPH*4221A** | 1.01 | 1.03 | 58MEB040–12 |
| CNPH*4321A** | 1.02 | 0.97 | 58MEB040–12 |
| CNPH*4821A** | 1.02 | 1.00 | 58MEB040–12 |
| CNPV*4217A** | 1.01 | 1.02 | 58MEB040–12 |
| CSPH*4212A** | 1.02 | 1.00 | 58MEB040–12 |
| CSPH*4812A** | 1.02 | 0.99 | 58MEB040–12 |
| CAP**4224A** | 1.00 | 1.05 | 58MV(B,C)040–14 |
| CAP**4824A** | 1.00 | 1.01 | 58MV(B,C)040–14 |
| CNPH*4221A** | 1.00 | 1.03 | 58MV(B,C)040–14 |
| CNPH*4821A** | 1.01 | 1.02 | 58MV(B,C)040–14 |
| CNPV*4824A** | 1.00 | 1.01 | 58MV(B,C)040–14 |
| CSPH*4212A** | 1.01 | 1.03 | 58MV(B,C)040–14 |
| CSPH*4812A** | 1.01 | 1.02 | 58MV(B,C)040–14 |
| CAP**4817A** | 0.96 | 0.95 | 58MV(B,C)060–14 |
| CNPH*4221A** | 1.00 | 1.03 | 58MV(B,C)060–14 |
| CNPH*4321A** | 1.02 | 0.98 | 58MV(B,C)060–14 |
| CNPH*4821A** | 1.01 | 1.02 | 58MV(B,C)060–14 |
| CNPV*4217A** | 1.01 | 1.02 | 58MV(B,C)060–14 |
| CSPH*4212A** | 1.01 | 1.02 | 58MV(B,C)060–14 |
| CSPH*4812A** | 1.00 | 0.99 | 58MV(B,C)060–14 |
| CAP**4221A** | 1.01 | 1.06 | 58MV(B,C)080–14 |
| CAP**4821A** | 1.01 | 1.02 | 58MV(B,C)080–14 |
| CNPH*4221A** | 1.00 | 1.04 | 58MV(B,C)080–14 |
| CNPH*4321A** | 1.02 | 1.00 | 58MV(B,C)080–14 |
| CNPH*4821A** | 1.01 | 1.03 | 58MV(B,C)080–14 |
| CNPV*4221A** | 1.00 | 1.04 | 58MV(B,C)080–14 |
| CNPV*4821A** | 1.01 | 1.03 | 58MV(B,C)080–14 |
| CSPH*4212A** | 1.01 | 1.03 | 58MV(B,C)080–14 |
| CSPH*4812A** | 1.01 | 1.02 | 58MV(B,C)080–14 |
| CAP**4221A** | 1.01 | 1.05 | 58MV(B,C)080–20 |
| CAP**4821A** | 1.00 | 0.99 | 58MV(B,C)080–20 |

| HEATING INDOOR MODEL | CAPACITY | POWER | FURNACE MODEL |
|---|---|---|---|
| CNPH*4221A** | 1.00 | 1.03 | 58MV(B,C)080–20 |
| CNPH*4321A** | 1.02 | 0.99 | 58MV(B,C)080–20 |
| CNPH*4821A** | 1.00 | 1.01 | 58MV(B,C)080–20 |
| CNPV*4221A** | 1.00 | 1.03 | 58MV(B,C)080–20 |
| CNPV*4821A** | 1.00 | 1.01 | 58MV(B,C)080–20 |
| CSPH*4212A** | 1.01 | 1.02 | 58MV(B,C)080–20 |
| CSPH*4812A** | 1.00 | 0.99 | 58MV(B,C)080–20 |
| CAP**4221A** | 1.00 | 1.03 | 58MV(B,C)100–20 |
| CAP**4821A** | 1.00 | 0.99 | 58MV(B,C)100–20 |
| CNPH*4221A** | 1.00 | 1.02 | 58MV(B,C)100–20 |
| CNPH*4321A** | 1.01 | 0.99 | 58MV(B,C)100–20 |
| CNPH*4821A** | 1.00 | 0.99 | 58MV(B,C)100–20 |
| CNPV*4221A** | 1.00 | 1.02 | 58MV(B,C)100–20 |
| CNPV*4821A** | 1.00 | 0.99 | 58MV(B,C)100–20 |
| CSPH*4212A** | 1.00 | 1.00 | 58MV(B,C)100–20 |
| CSPH*4812A** | 1.00 | 0.99 | 58MV(B,C)100–20 |
| CAP**4224A** | 1.00 | 1.03 | 58MV(B,C)120–20 |
| CAP**4824A** | 1.00 | 0.99 | 58MV(B,C)120–20 |
| CNPH*4221A** | 1.00 | 1.02 | 58MV(B,C)120–20 |
| CNPH*4321A** | 1.01 | 0.97 | 58MV(B,C)120–20 |
| CNPH*4821A** | 1.00 | 1.00 | 58MV(B,C)120–20 |
| CNPV*4324A** | 1.01 | 0.97 | 58MV(B,C)120–20 |
| CNPV*4824A** | 1.00 | 1.00 | 58MV(B,C)120–20 |
| CSPH*4212A** | 1.00 | 1.01 | 58MV(B,C)120–20 |
| CSPH*4812A** | 1.00 | 0.99 | 58MV(B,C)120–20 |
| CNPH*4321A** | 1.01 | 0.99 | 58MVB040–14 |
| CNPV*4324A** | 1.01 | 0.99 | 58MVB040–14 |
| CAP**4817A** | 0.98 | 0.98 | 58PH*070–16 |
| CNPH*4221A** | 1.02 | 1.07 | 58PH*070–16 |
| CNPH*4321A** | 1.01 | 0.99 | 58PH*070–16 |
| CNPH*4821A** | 1.02 | 1.02 | 58PH*070–16 |
| CNPV*4217A** | 1.02 | 1.06 | 58PH*070–16 |
| CSPH*4212A** | 1.02 | 1.03 | 58PH*070–16 |
| CSPH*4812A** | 1.02 | 1.02 | 58PH*070–16 |
| CAP**4221A** | 1.00 | 1.02 | 58PH*090–16 |
| CAP**4821A** | 0.98 | 0.95 | 58PH*090–16 |
| CNPH*4221A** | 1.00 | 1.03 | 58PH*090–16 |
| CNPH*4321A** | 1.01 | 0.96 | 58PH*090–16 |
| CNPH*4821A** | 1.01 | 0.99 | 58PH*090–16 |
| CNPV*4221A** | 0.98 | 1.00 | 58PH*090–16 |
| CNPV*4821A** | 1.01 | 0.99 | 58PH*090–16 |
| CSPH*4212A** | 1.01 | 1.00 | 58PH*090–16 |
| CSPH*4812A** | 1.01 | 0.99 | 58PH*090–16 |
| CAP**4221A** | 1.00 | 1.02 | 58PH*110–20 |
| CAP**4821A** | 0.98 | 0.95 | 58PH*110–20 |
| CNPH*4221A** | 1.00 | 1.02 | 58PH*110–20 |
| CNPH*4321A** | 1.01 | 0.96 | 58PH*110–20 |
| CNPH*4821A** | 1.01 | 0.99 | 58PH*110–20 |
| CNPV*4221A** | 1.00 | 1.02 | 58PH*110–20 |
| CNPV*4821A** | 1.01 | 0.99 | 58PH*110–20 |
| CSPH*4212A** | 1.01 | 1.00 | 58PH*110–20 |
| CSPH*4812A** | 1.01 | 0.99 | 58PH*110–20 |
| CAP**4224A** | 1.00 | 1.02 | 58PH*135–20 |
| CAP**4824A** | 0.98 | 0.95 | 58PH*135–20 |

| HEATING INDOOR MODEL | CAPACITY | POWER | FURNACE MODEL |
|---|---|---|---|
| CNPH*4221A** | 1.00 | 1.03 | 58PH*135–20 |
| CNPH*4321A** | 1.01 | 0.96 | 58PH*135–20 |
| CNPH*4821A** | 1.01 | 0.99 | 58PH*135–20 |
| CNPV*4324A** | 1.01 | 0.95 | 58PH*135–20 |
| CNPV*4824A** | 1.01 | 0.99 | 58PH*135–20 |
| CSPH*4212A** | 1.01 | 1.00 | 58PH*135–20 |
| CSPH*4812A** | 1.01 | 0.99 | 58PH*135–20 |
| CAP**4221A** | 1.00 | 1.03 | 58VLR120–20 |
| CAP**4821A** | 1.01 | 1.00 | 58VLR120–20 |
| CNPH*4221A** | 1.00 | 1.03 | 58VLR120–20 |
| CNPH*4821A** | 1.01 | 1.01 | 58VLR120–20 |
| CNPV*4221A** | 1.00 | 1.03 | 58VLR120–20 |
| CNPV*4321A** | 1.01 | 0.97 | 58VLR120–20 |
| CNPV*4821A** | 1.01 | 1.01 | 58VLR120–20 |
| CSPH*4212A** | 1.01 | 1.01 | 58VLR120–20 |
| CSPH*4812A** | 1.01 | 1.00 | 58VLR120–20 |
| CAP**4221A** | 1.00 | 1.04 | 58VMR120–20 |
| CAP**4821A** | 1.01 | 1.01 | 58VMR120–20 |
| CNPH*4221A** | 1.00 | 1.04 | 58VMR120–20 |
| CNPH*4821A** | 1.01 | 1.01 | 58VMR120–20 |
| CNPV*4221A** | 1.00 | 1.04 | 58VMR120–20 |
| CNPV*4321A** | 1.01 | 0.98 | 58VMR120–20 |
| CNPV*4821A** | 1.01 | 1.01 | 58VMR120–20 |
| CSPH*4212A** | 1.01 | 1.02 | 58VMR120–20 |
| CSPH*4812A** | 1.01 | 1.01 | 58VMR120–20 |
| CAP**4221A** | 1.01 | 1.05 | OVLAAB048112 |
| CAP**4821A** | 1.02 | 1.02 | OVLAAB048112 |
| CNPH*4221A** | 1.02 | 1.06 | OVLAAB048112 |
| CNPH*4321A** | 1.02 | 0.99 | OVLAAB048112 |
| CNPH*4821A** | 1.02 | 1.01 | OVLAAB048112 |
| CNPV*4221A** | 1.02 | 1.06 | OVLAAB048112 |
| CNPV*4821A** | 1.02 | 1.01 | OVLAAB048112 |
| CSPH*4212A** | 1.02 | 1.02 | OVLAAB048112 |
| CSPH*4812A** | 1.02 | 1.01 | OVLAAB048112 |
| CNPH*4221A** | 1.02 | 1.02 | OVLAAB060154 |
| CNPH*4321A** | 1.02 | 0.96 | OVLAAB060154 |
| CNPH*4821A** | 1.02 | 0.98 | OVLAAB060154 |
| CSPH*4212A** | 1.02 | 0.98 | OVLAAB060154 |
| CSPH*4812A** | 1.02 | 0.97 | OVLAAB060154 |
| CAP**4817A** | 1.01 | 1.01 | OVMAAB042112 |
| CNPH*4221A** | 1.01 | 1.05 | OVMAAB042112 |
| CNPH*4321A** | 1.02 | 1.00 | OVMAAB042112 |
| CNPH*4821A** | 1.01 | 1.01 | OVMAAB042112 |
| CNPV*4217A** | 1.01 | 1.04 | OVMAAB042112 |
| CSPH*4212A** | 1.02 | 1.03 | OVMAAB042112 |
| CSPH*4812A** | 1.02 | 1.02 | OVMAAB042112 |
| CAP**4221A** | 0.98 | 1.05 | 59*N*A060V17**14 |
| CAP**4817A** | 0.99 | 1.00 | 59*N*A060V17**14 |
| CAP**4821A** | 0.99 | 1.02 | 59*N*A060V17**14 |
| CNPH*4221A** | 0.98 | 1.05 | 59*N*A060V17**14 |
| CNPH*4321A** | 1.00 | 1.00 | 59*N*A060V17**14 |
| CNPH*4821A** | 0.99 | 1.02 | 59*N*A060V17**14 |
| CNPV*4217A** | 0.99 | 1.04 | 59*N*A060V17**14 |

# HEAT PUMP HEATING PERFORMANCE CONTINUED

**25HCB342A30 Outdoor Section With FY4ANF042 Indoor Section**

| HEATING INDOOR MODEL | CAPACITY | POWER | FURNACE MODEL |
|---|---|---|---|
| CNPV*4221A** | 0.98 | 1.05 | 59*N*A060V17**14 |
| CNPV*4821A** | 0.99 | 1.02 | 59*N*A060V17**14 |
| CSPH*4212A** | 0.99 | 1.02 | 59*N*A060V17**14 |
| CSPH*4812A** | 0.99 | 1.01 | 59*N*A060V17**14 |
| CAP**4221A** | 0.98 | 1.03 | 59*N*A080V17**14 |
| CAP**4817A** | 0.98 | 0.98 | 59*N*A080V17**14 |
| CAP**4821A** | 0.99 | 1.00 | 59*N*A080V17**14 |
| CNPH*4221A** | 0.98 | 1.03 | 59*N*A080V17**14 |
| CNPH*4321A** | 0.99 | 0.98 | 59*N*A080V17**14 |
| CNPH*4821A** | 0.99 | 1.01 | 59*N*A080V17**14 |
| CNPV*4217A** | 0.99 | 1.03 | 59*N*A080V17**14 |
| CNPV*4221A** | 0.98 | 1.03 | 59*N*A080V17**14 |
| CNPV*4821A** | 0.99 | 1.01 | 59*N*A080V17**14 |
| CSPH*4212A** | 0.99 | 1.01 | 59*N*A080V17**14 |
| CSPH*4812A** | 0.99 | 1.00 | 59*N*A080V17**14 |
| CAP**4221A** | 0.98 | 1.03 | 59*N*A100V21**20 |
| CAP**4224A** | 0.98 | 1.02 | 59*N*A100V21**20 |
| CAP**4821A** | 0.98 | 0.98 | 59*N*A100V21**20 |
| CAP**4823A** | 0.98 | 0.98 | 59*N*A100V21**20 |
| CAP**4824A** | 0.98 | 0.98 | 59*N*A100V21**20 |
| CNPH*4221A** | 0.98 | 1.03 | 59*N*A100V21**20 |
| CNPH*4321A** | 0.99 | 0.97 | 59*N*A100V21**20 |
| CNPH*4821A** | 0.99 | 1.00 | 59*N*A100V21**20 |
| CNPV*4221A** | 0.98 | 1.03 | 59*N*A100V21**20 |
| CNPV*4324A** | 0.99 | 0.97 | 59*N*A100V21**20 |
| CNPV*4821A** | 0.99 | 1.00 | 59*N*A100V21**20 |
| CNPV*4824A** | 0.99 | 1.00 | 59*N*A100V21**20 |
| CSPH*4212A** | 0.99 | 1.00 | 59*N*A100V21**20 |
| CSPH*4812A** | 0.99 | 0.99 | 59*N*A100V21**20 |
| CAP**4224A** | 0.96 | 1.01 | 59*N*A120V24**22 |
| CAP**4823A** | 0.98 | 0.98 | 59*N*A120V24**22 |
| CAP**4824A** | 0.98 | 0.98 | 59*N*A120V24**22 |
| CNPH*4221A** | 0.98 | 1.02 | 59*N*A120V24**22 |
| CNPH*4321A** | 0.99 | 0.96 | 59*N*A120V24**22 |
| CNPH*4821A** | 0.98 | 0.98 | 59*N*A120V24**22 |
| CNPV*4324A** | 0.99 | 0.96 | 59*N*A120V24**22 |
| CNPV*4824A** | 0.98 | 0.98 | 59*N*A120V24**22 |
| CSPH*4212A** | 0.98 | 0.99 | 59*N*A120V24**22 |
| CSPH*4812A** | 0.99 | 0.99 | 59*N*A120V24**22 |
| CAP**4221A** | 0.99 | 1.04 | 59*P5A060E17**14 |
| CAP**4817A** | 0.99 | 0.99 | 59*P5A060E17**14 |
| CAP**4821A** | 0.99 | 0.99 | 59*P5A060E17**14 |
| CNPH*4221A** | 0.99 | 1.04 | 59*P5A060E17**14 |
| CNPH*4321A** | 1.00 | 0.98 | 59*P5A060E17**14 |
| CNPH*4821A** | 1.00 | 1.01 | 59*P5A060E17**14 |
| CNPV*4217A** | 0.99 | 1.02 | 59*P5A060E17**14 |
| CNPV*4221A** | 0.99 | 1.04 | 59*P5A060E17**14 |
| CNPV*4821A** | 1.00 | 1.01 | 59*P5A060E17**14 |
| CSPH*4212A** | 1.00 | 1.01 | 59*P5A060E17**14 |
| CSPH*4812A** | 1.00 | 1.00 | 59*P5A060E17**14 |
| CAP**4221A** | 0.99 | 1.02 | 59*P5A080E17**16 |
| CAP**4817A** | 0.99 | 0.98 | 59*P5A080E17**16 |
| CAP**4821A** | 0.99 | 0.98 | 59*P5A080E17**16 |
| CNPH*4221A** | 0.99 | 1.03 | 59*P5A080E17**16 |

| HEATING INDOOR MODEL | CAPACITY | POWER | FURNACE MODEL |
|---|---|---|---|
| CNPH*4321A** | 1.00 | 0.97 | 59*P5A080E17**16 |
| CNPH*4821A** | 1.00 | 0.99 | 59*P5A080E17**16 |
| CNPV*4217A** | 0.99 | 1.01 | 59*P5A080E17**16 |
| CNPV*4221A** | 0.99 | 1.03 | 59*P5A080E17**16 |
| CNPV*4821A** | 1.00 | 0.99 | 59*P5A080E17**16 |
| CSPH*4212A** | 1.00 | 1.00 | 59*P5A080E17**16 |
| CSPH*4812A** | 1.00 | 0.99 | 59*P5A080E17**16 |
| CAP**4221A** | 0.98 | 1.02 | 59*P5A100E21**16 |
| CAP**4224A** | 0.98 | 1.02 | 59*P5A100E21**16 |
| CAP**4821A** | 0.99 | 0.99 | 59*P5A100E21**16 |
| CAP**4823A** | 0.99 | 0.99 | 59*P5A100E21**16 |
| CAP**4824A** | 0.99 | 0.99 | 59*P5A100E21**16 |
| CNPH*4221A** | 0.98 | 1.03 | 59*P5A100E21**16 |
| CNPH*4321A** | 1.00 | 0.97 | 59*P5A100E21**16 |
| CNPH*4821A** | 0.99 | 0.99 | 59*P5A100E21**16 |
| CNPV*4221A** | 0.98 | 1.03 | 59*P5A100E21**16 |
| CNPV*4324A** | 1.00 | 0.97 | 59*P5A100E21**16 |
| CNPV*4821A** | 0.99 | 0.99 | 59*P5A100E21**16 |
| CNPV*4824A** | 0.99 | 0.99 | 59*P5A100E21**16 |
| CSPH*4212A** | 0.99 | 1.00 | 59*P5A100E21**16 |
| CSPH*4812A** | 0.99 | 0.99 | 59*P5A100E21**16 |
| CAP**4224A** | 0.99 | 1.00 | 59*P5A120E24**22 |
| CAP**4823A** | 0.99 | 0.97 | 59*P5A120E24**22 |
| CAP**4824A** | 0.99 | 0.96 | 59*P5A120E24**22 |
| CNPH*4221A** | 0.99 | 1.01 | 59*P5A120E24**22 |
| CNPH*4321A** | 1.00 | 0.95 | 59*P5A120E24**22 |
| CNPH*4821A** | 1.00 | 0.97 | 59*P5A120E24**22 |
| CNPV*4324A** | 1.00 | 0.94 | 59*P5A120E24**22 |
| CNPV*4824A** | 1.00 | 0.97 | 59*P5A120E24**22 |
| CSPH*4212A** | 1.00 | 0.98 | 59*P5A120E24**22 |
| CSPH*4812A** | 1.00 | 0.97 | 59*P5A120E24**22 |

See note on pg. 65

# HEAT PUMP HEATING PERFORMANCE CONTINUED

| INDOOR AIR | | OUTDOOR COIL ENTERING AIR TEMPERATURES °F (°C) | | | | | | | | | | | | | | | | | | | | | | | |
|---|---|---|---|---|---|---|---|---|---|---|---|---|---|---|---|---|---|---|---|---|---|---|---|---|---|
| | | −3 (−19.4) | | | 7 (−13.9) | | | 17 (−8.3) | | | 27 (−2.8) | | | 37 (2.8) | | | 47 (8.3) | | | 57 (13.9) | | | 67 (19.4) | | |
| EDB °F (°C) | CFM | Capacity MBtuh | | Total Sys. KW† | Capacity MBtuh | | Total Sys. KW† | Capacity MBtuh | | Total Sys. KW† | Capacity MBtuh | | Total Sys. KW† | Capacity MBtuh | | Total Sys. KW† | Capacity MBtuh | | Total Sys. KW† | Capacity MBtuh | | Total Sys. KW† | Capacity MBtuh | | Total Sys. KW† |
| | | Total | Integ* | | Total | Integ* | | Total | Integ* | | Total | Integ* | | Total | Integ* | | Total | Integ* | | Total | Integ* | | Total | Integ* | |
| 25HCB348A30 Outdoor Section With FY4ANF048 Indoor Section | | | | | | | | | | | | | | | | | | | | | | | | | |
| 65 (18.3) | 1400 | 21.02 | 19.34 | 3.15 | 25.66 | 23.58 | 3.27 | 30.63 | 27.92 | 3.39 | 36.31 | 32.25 | 3.55 | 42.60 | 38.76 | 3.70 | 48.84 | 48.84 | 3.87 | 54.32 | 54.32 | 4.05 | 56.50 | 56.50 | 4.10 |
| | 1600 | 21.41 | 19.70 | 3.20 | 26.07 | 23.95 | 3.30 | 31.08 | 28.34 | 3.41 | 36.82 | 32.70 | 3.55 | 43.01 | 39.14 | 3.68 | 48.80 | 48.80 | 3.84 | 51.13 | 51.13 | 3.89 | 52.63 | 52.63 | 3.91 |
| | 1800 | 21.77 | 20.03 | 3.25 | 26.44 | 24.30 | 3.35 | 31.50 | 28.72 | 3.45 | 37.27 | 33.10 | 3.58 | 43.11 | 39.23 | 3.69 | 47.24 | 47.24 | 3.79 | 48.26 | 48.26 | 3.80 | 49.37 | 49.37 | 3.81 |
| 70 (21.1) | 1400 | 20.52 | 18.88 | 3.29 | 25.21 | 23.16 | 3.42 | 30.19 | 27.53 | 3.55 | 35.74 | 31.74 | 3.71 | 41.99 | 38.21 | 3.90 | 48.41 | 48.41 | 4.06 | 54.98 | 54.98 | 4.29 | 57.35 | 57.35 | 4.34 |
| | 1600 | 20.92 | 19.24 | 3.33 | 25.62 | 23.55 | 3.45 | 30.62 | 27.92 | 3.57 | 36.31 | 32.25 | 3.72 | 42.58 | 38.75 | 3.85 | 48.50 | 48.50 | 4.02 | 52.26 | 52.26 | 4.12 | 53.93 | 53.93 | 4.15 |
| | 1800 | 21.28 | 19.58 | 3.39 | 26.01 | 23.90 | 3.49 | 31.03 | 28.29 | 3.60 | 36.75 | 32.64 | 3.74 | 42.83 | 38.98 | 3.86 | 48.16 | 48.16 | 4.01 | 49.40 | 49.40 | 4.02 | 50.74 | 50.74 | 4.04 |
| 75 (23.9) | 1400 | 19.98 | 18.39 | 3.42 | 24.76 | 22.75 | 3.57 | 29.75 | 27.12 | 3.72 | 35.19 | 31.25 | 3.88 | 41.42 | 37.69 | 4.08 | 48.00 | 48.00 | 4.26 | 54.51 | 54.51 | 4.49 | 58.18 | 58.18 | 4.60 |
| | 1600 | 20.37 | 18.74 | 3.47 | 25.14 | 23.10 | 3.60 | 30.19 | 27.53 | 3.73 | 35.69 | 31.70 | 3.88 | 42.01 | 38.22 | 4.04 | 48.14 | 48.14 | 4.21 | 53.06 | 53.06 | 4.36 | 54.85 | 54.85 | 4.40 |
| | 1800 | 20.76 | 19.10 | 3.53 | 25.53 | 23.46 | 3.64 | 30.60 | 27.90 | 3.77 | 36.15 | 32.11 | 3.90 | 42.46 | 38.64 | 4.04 | 48.15 | 48.15 | 4.20 | 50.73 | 50.73 | 4.26 | 52.17 | 52.17 | 4.28 |

| HEATING INDOOR MODEL | CAPACITY | POWER | FURNACE MODEL |
|---|---|---|---|
| *FY5BNF048 | 1.00 | 1.00 | |
| FB4CNF048 | 0.99 | 1.01 | |
| FB4CNF048 | 1.00 | 1.03 | |
| FB4CNF060 | 0.99 | 0.97 | |
| FB4CNF060 | 1.00 | 0.99 | |
| FE4AN(B,F)005 | 0.98 | 0.97 | |
| FE4ANB006 | 0.95 | 0.91 | |
| FV4BN(B,F)005 | 0.98 | 0.97 | |
| FV4BNB006 | 0.95 | 0.91 | |
| FX4CN(B,F)048 | 0.98 | 0.96 | |
| FX4CN(B,F)060 | 0.91 | 0.88 | |
| FX4DN(B,F)049 | 0.99 | 0.96 | |
| FX4DN(B,F)061 | 0.91 | 0.88 | |
| FY4ANB060 | 0.93 | 0.95 | |
| FY4ANF048 | 1.00 | 1.03 | |
| FY5BNB060 | 0.96 | 0.99 | |
| FY5BNF048 | 0.99 | 0.98 | |
| CAP**4817A** | 0.99 | 1.01 | |
| CAP**4821A** | 1.01 | 1.02 | |
| CAP**4823A** | 1.01 | 1.02 | |
| CAP**4824A** | 1.01 | 1.02 | |
| CAP**6021A** | 0.92 | 0.94 | |
| CAP**6024A** | 0.93 | 0.95 | |
| CAP**6025A** | 0.93 | 0.95 | |
| CNPF*4818A** | 1.00 | 1.06 | |
| CNPH*4821A** | 1.01 | 1.02 | |
| CNPH*6024A** | 0.93 | 0.94 | |
| CNPV*4821A** | 1.01 | 1.02 | |
| CNPV*4824A** | 1.01 | 1.02 | |
| CNPV*6024A** | 0.93 | 0.94 | |
| CSPH*4812A** | 1.01 | 1.00 | |
| CSPH*6012A** | 0.93 | 0.92 | |
| CAP**4817A** | 0.98 | 0.99 | 58CV(A,X)090−16 |
| CNPH*4821A** | 0.99 | 1.02 | 58CV(A,X)090−16 |
| CNPH*6024A** | 0.97 | 0.97 | 58CV(A,X)090−16 |
| CNPV*4821A** | 0.99 | 1.02 | 58CV(A,X)090−16 |
| CSPH*4812A** | 0.99 | 1.01 | 58CV(A,X)090−16 |
| CSPH*6012A** | 0.97 | 0.96 | 58CV(A,X)090−16 |
| CAP**4821A** | 0.99 | 1.01 | 58CV(A,X)110−20 |
| CAP**6021A** | 0.96 | 0.96 | 58CV(A,X)110−20 |

| HEATING INDOOR MODEL | CAPACITY | POWER | FURNACE MODEL |
|---|---|---|---|
| CNPH*4821A** | 0.99 | 1.02 | 58CV(A,X)110−20 |
| CNPH*6024A** | 0.97 | 0.97 | 58CV(A,X)110−20 |
| CNPV*4821A** | 0.99 | 1.02 | 58CV(A,X)110−20 |
| CSPH*4812A** | 0.99 | 1.00 | 58CV(A,X)110−20 |
| CSPH*6012A** | 0.96 | 0.95 | 58CV(A,X)110−20 |
| CAP**4824A** | 0.99 | 1.00 | 58CV(A,X)135−22 |
| CAP**6024A** | 0.97 | 0.97 | 58CV(A,X)135−22 |
| CNPH*4821A** | 0.99 | 1.01 | 58CV(A,X)135−22 |
| CNPH*6024A** | 0.97 | 0.96 | 58CV(A,X)135−22 |
| CNPV*4824A** | 0.99 | 1.01 | 58CV(A,X)135−22 |
| CNPV*6024A** | 0.97 | 0.96 | 58CV(A,X)135−22 |
| CSPH*4812A** | 0.99 | 1.00 | 58CV(A,X)135−22 |
| CSPH*6012A** | 0.96 | 0.94 | 58CV(A,X)135−22 |
| CAP**4824A** | 0.99 | 0.99 | 58CV(A,X)155−22 |
| CAP**6024A** | 0.96 | 0.95 | 58CV(A,X)155−22 |
| CNPH*4821A** | 0.99 | 1.00 | 58CV(A,X)155−22 |
| CNPH*6024A** | 0.96 | 0.94 | 58CV(A,X)155−22 |
| CNPV*4824A** | 0.99 | 1.00 | 58CV(A,X)155−22 |
| CNPV*6024A** | 0.96 | 0.94 | 58CV(A,X)155−22 |
| CSPH*4812A** | 0.99 | 0.98 | 58CV(A,X)155−22 |
| CSPH*6012A** | 0.96 | 0.93 | 58CV(A,X)155−22 |
| CAP**4823A** | 0.99 | 1.00 | 58HDV080−−20 |
| CAP**6025A** | 0.98 | 0.98 | 58HDV080−−20 |
| CNPH*4821A** | 0.99 | 1.00 | 58HDV080−−20 |
| CNPH*6024A** | 0.99 | 0.99 | 58HDV080−−20 |
| CNPV*4821A** | 0.98 | 0.99 | 58HDV080−−20 |
| CNPV*4824A** | 0.98 | 0.99 | 58HDV080−−20 |
| CNPV*6024A** | 0.97 | 0.97 | 58HDV080−−20 |
| CNPV*6124A** | 0.96 | 0.94 | 58HDV080−−20 |
| CSPH*4812A** | 0.99 | 0.99 | 58HDV080−−20 |
| CSPH*6012A** | 0.99 | 0.97 | 58HDV080−−20 |
| CAP**4824A** | 0.99 | 1.00 | 58HDV100−−20 |
| CAP**6024A** | 0.99 | 1.00 | 58HDV100−−20 |
| CAP**6025A** | 0.99 | 1.00 | 58HDV100−−20 |
| CNPH*4821A** | 0.99 | 1.01 | 58HDV100−−20 |
| CNPH*6024A** | 0.99 | 0.99 | 58HDV100−−20 |
| CNPV*4824A** | 0.98 | 1.00 | 58HDV100−−20 |
| CNPV*4824A** | 0.99 | 1.01 | 58HDV100−−20 |
| CNPV*6024A** | 0.97 | 0.97 | 58HDV100−−20 |
| CNPV*6024A** | 0.99 | 0.99 | 58HDV100−−20 |

| HEATING INDOOR MODEL | CAPACITY | POWER | FURNACE MODEL |
|---|---|---|---|
| CNPV*6124A** | 0.96 | 0.94 | 58HDV100−−20 |
| CSPH*4812A** | 0.99 | 1.00 | 58HDV100−−20 |
| CSPH*6012A** | 0.99 | 0.97 | 58HDV100−−20 |
| CAP**4817A** | 0.99 | 1.00 | 58ME(B,C)080−16 |
| CNPH*4821A** | 0.99 | 1.01 | 58ME(B,C)080−16 |
| CNPH*6024A** | 0.99 | 0.99 | 58ME(B,C)080−16 |
| CSPH*4812A** | 0.99 | 1.00 | 58ME(B,C)080−16 |
| CSPH*6012A** | 0.99 | 0.98 | 58ME(B,C)080−16 |
| CAP**4821A** | 0.99 | 0.99 | 58ME(B,C)100−20 |
| CAP**6021A** | 0.96 | 0.95 | 58ME(B,C)100−20 |
| CNPH*4821A** | 0.99 | 1.00 | 58ME(B,C)100−20 |
| CNPH*6024A** | 0.99 | 0.97 | 58ME(B,C)100−20 |
| CNPV*4821A** | 0.99 | 1.00 | 58ME(B,C)100−20 |
| CSPH*4812A** | 0.99 | 0.99 | 58ME(B,C)100−20 |
| CSPH*6012A** | 0.99 | 0.96 | 58ME(B,C)100−20 |
| CAP**4824A** | 0.99 | 0.98 | 58ME(B,C)120−20 |
| CAP**6024A** | 0.97 | 0.96 | 58ME(B,C)120−20 |
| CNPH*4821A** | 0.99 | 0.99 | 58ME(B,C)120−20 |
| CNPH*6024A** | 0.99 | 0.97 | 58ME(B,C)120−20 |
| CNPV*4824A** | 0.99 | 0.99 | 58ME(B,C)120−20 |
| CNPV*6024A** | 0.99 | 0.97 | 58ME(B,C)120−20 |
| CSPH*4812A** | 0.99 | 0.98 | 58ME(B,C)120−20 |
| CSPH*6012A** | 0.99 | 0.96 | 58ME(B,C)120−20 |
| CAP**4821A** | 1.00 | 1.03 | 58MV(B,C)080−20 |
| CAP**6021A** | 0.97 | 0.98 | 58MV(B,C)080−20 |
| CNPH*4821A** | 1.00 | 1.04 | 58MV(B,C)080−20 |
| CNPH*6024A** | 0.97 | 0.98 | 58MV(B,C)080−20 |
| CNPV*4821A** | 1.00 | 1.04 | 58MV(B,C)080−20 |
| CSPH*4812A** | 1.00 | 1.02 | 58MV(B,C)080−20 |
| CSPH*6012A** | 0.97 | 0.97 | 58MV(B,C)080−20 |
| CAP**4821A** | 0.99 | 1.01 | 58MV(B,C)100−20 |
| CAP**6021A** | 0.97 | 0.98 | 58MV(B,C)100−20 |
| CNPH*4821A** | 0.99 | 1.02 | 58MV(B,C)100−20 |
| CNPH*6024A** | 0.97 | 0.97 | 58MV(B,C)100−20 |
| CNPV*4821A** | 0.99 | 1.02 | 58MV(B,C)100−20 |
| CSPH*4812A** | 0.99 | 1.01 | 58MV(B,C)100−20 |
| CSPH*6012A** | 0.97 | 0.96 | 58MV(B,C)100−20 |
| CAP**4824A** | 0.99 | 1.01 | 58MV(B,C)120−20 |
| CAP**6024A** | 0.97 | 0.98 | 58MV(B,C)120−20 |
| CNPH*4821A** | 0.99 | 1.03 | 58MV(B,C)120−20 |

# HEAT PUMP HEATING PERFORMANCE CONTINUED

**25HCB348A30 Outdoor Section With FY4ANF048 Indoor Section**

| HEATING INDOOR MODEL | CAPACITY | POWER | FURNACE MODEL |
|---|---|---|---|
| CNPH*6024A** | 0.97 | 0.98 | 58MV(B,C)120–20 |
| CNPV*4824A** | 0.99 | 1.03 | 58MV(B,C)120–20 |
| CNPV*6024A** | 0.97 | 0.98 | 58MV(B,C)120–20 |
| CSPH*4812A** | 0.99 | 1.01 | 58MV(B,C)120–20 |
| CSPH*6012A** | 0.97 | 0.96 | 58MV(B,C)120–20 |
| CAP**4821A** | 0.99 | 1.00 | 58PH*090–16 |
| CAP**6021A** | 0.96 | 0.95 | 58PH*090–16 |
| CNPH*4821A** | 0.99 | 1.01 | 58PH*090–16 |
| CNPH*6024A** | 0.99 | 0.98 | 58PH*090–16 |
| CNPV*4821A** | 0.99 | 1.01 | 58PH*090–16 |
| CSPH*4812A** | 0.99 | 1.00 | 58PH*090–16 |
| CSPH*6012A** | 0.99 | 0.97 | 58PH*090–16 |
| CAP**4821A** | 0.99 | 1.00 | 58PH*110–20 |
| CAP**6021A** | 0.97 | 0.96 | 58PH*110–20 |
| CNPH*4821A** | 0.99 | 1.00 | 58PH*110–20 |
| CNPH*6024A** | 0.99 | 0.97 | 58PH*110–20 |
| CNPV*4821A** | 0.99 | 1.00 | 58PH*110–20 |
| CSPH*4812A** | 0.99 | 1.00 | 58PH*110–20 |
| CSPH*6012A** | 0.99 | 0.96 | 58PH*110–20 |
| CAP**4824A** | 0.99 | 1.00 | 58PH*135–20 |
| CAP**6024A** | 0.97 | 0.97 | 58PH*135–20 |
| CNPH*4821A** | 0.99 | 1.00 | 58PH*135–20 |
| CNPH*6024A** | 0.99 | 0.98 | 58PH*135–20 |
| CNPV*4824A** | 0.99 | 1.00 | 58PH*135–20 |
| CNPV*6024A** | 0.99 | 0.98 | 58PH*135–20 |
| CSPH*4812A** | 0.99 | 1.00 | 58PH*135–20 |
| CSPH*6012A** | 0.99 | 0.97 | 58PH*135–20 |
| CAP**4821A** | 0.99 | 1.01 | 58VLR120–20 |
| CAP**6021A** | 0.99 | 1.00 | 58VLR120–20 |
| CNPH*4821A** | 0.99 | 1.02 | 58VLR120–20 |
| CNPH*6024A** | 0.99 | 0.99 | 58VLR120–20 |
| CNPH*6124A** | 0.98 | 0.97 | 58VLR120–20 |
| CNPV*4821A** | 0.99 | 1.02 | 58VLR120–20 |
| CSPH*4812A** | 0.99 | 1.00 | 58VLR120–20 |
| CSPH*6012A** | 0.99 | 0.98 | 58VLR120–20 |
| CAP**4821A** | 0.99 | 1.01 | 58VMR120–20 |
| CAP**6021A** | 0.99 | 1.00 | 58VMR120–20 |
| CNPH*4821A** | 0.99 | 1.02 | 58VMR120–20 |
| CNPH*6024A** | 0.99 | 1.00 | 58VMR120–20 |
| CNPH*6124A** | 0.98 | 0.98 | 58VMR120–20 |
| CNPV*4821A** | 0.99 | 1.02 | 58VMR120–20 |
| CSPH*4812A** | 0.99 | 1.01 | 58VMR120–20 |
| CSPH*6012A** | 0.99 | 0.98 | 58VMR120–20 |
| CAP**4821A** | 0.97 | 1.00 | OVLAAB048112 |
| CAP**6021A** | 0.96 | 0.99 | OVLAAB048112 |
| CNPH*4821A** | 0.98 | 1.01 | OVLAAB048112 |
| CNPH*6024A** | 0.98 | 1.00 | OVLAAB048112 |
| CNPV*4821A** | 0.98 | 1.01 | OVLAAB048112 |
| CSPH*4812A** | 0.98 | 1.00 | OVLAAB048112 |
| CSPH*6012A** | 0.97 | 0.97 | OVLAAB048112 |
| CNPH*4821A** | 0.98 | 0.97 | OVLAAB060154 |
| CNPH*6024A** | 0.97 | 0.96 | OVLAAB060154 |
| CSPH*4812A** | 0.98 | 0.96 | OVLAAB060154 |
| CSPH*6012A** | 0.96 | 0.93 | OVLAAB060154 |
| CAP**4821A** | 0.98 | 1.02 | 59*N*A100V21**20 |
| CAP**4823A** | 0.98 | 1.02 | 59*N*A100V21**20 |

| HEATING INDOOR MODEL | CAPACITY | POWER | FURNACE MODEL |
|---|---|---|---|
| CAP**4824A** | 0.98 | 1.01 | 59*N*A100V21**20 |
| CAP**6021A** | 0.96 | 0.99 | 59*N*A100V21**20 |
| CAP**6024A** | 0.96 | 0.98 | 59*N*A100V21**20 |
| CAP**6025A** | 0.96 | 0.98 | 59*N*A100V21**20 |
| CNPH*4821A** | 0.98 | 1.03 | 59*N*A100V21**20 |
| CNPH*6024A** | 0.98 | 1.00 | 59*N*A100V21**20 |
| CNPH*6124A** | 0.96 | 0.97 | 59*N*A100V21**20 |
| CNPV*4821A** | 0.98 | 1.03 | 59*N*A100V21**20 |
| CNPV*4824A** | 0.98 | 1.03 | 59*N*A100V21**20 |
| CNPV*6024A** | 0.98 | 1.00 | 59*N*A100V21**20 |
| CNPV*6124A** | 0.97 | 0.96 | 59*N*A100V21**20 |
| CSPH*4812A** | 0.98 | 1.01 | 59*N*A100V21**20 |
| CSPH*6012A** | 0.98 | 0.98 | 59*N*A100V21**20 |
| CAP**4823A** | 0.97 | 1.00 | 59*N*A120V24**22 |
| CAP**4824A** | 0.97 | 1.00 | 59*N*A120V24**22 |
| CAP**6024A** | 0.96 | 0.97 | 59*N*A120V24**22 |
| CAP**6025A** | 0.96 | 0.97 | 59*N*A120V24**22 |
| CNPH*4821A** | 0.97 | 1.01 | 59*N*A120V24**22 |
| CNPH*6024A** | 0.97 | 0.98 | 59*N*A120V24**22 |
| CNPH*6124A** | 0.96 | 0.96 | 59*N*A120V24**22 |
| CNPV*4824A** | 0.97 | 1.01 | 59*N*A120V24**22 |
| CNPV*6024A** | 0.97 | 0.98 | 59*N*A120V24**22 |
| CNPV*6124A** | 0.97 | 0.95 | 59*N*A120V24**22 |
| CSPH*4812A** | 0.98 | 1.01 | 59*N*A120V24**22 |
| CSPH*6012A** | 0.97 | 0.97 | 59*N*A120V24**22 |
| CNPH*4821A** | 0.99 | 1.04 | 59*P5A080E17**16 |
| CNPH*6024A** | 0.99 | 1.01 | 59*P5A080E17**16 |
| CNPV*4821A** | 0.99 | 1.04 | 59*P5A080E17**16 |
| CSPH*6012A** | 0.98 | 0.99 | 59*P5A080E17**16 |
| CAP**4821A** | 0.98 | 1.01 | 59*P5A100E21**16 |
| CAP**4823A** | 0.98 | 1.01 | 59*P5A100E21**16 |
| CAP**4824A** | 0.98 | 1.01 | 59*P5A100E21**16 |
| CAP**6021A** | 0.97 | 0.99 | 59*P5A100E21**16 |
| CAP**6024A** | 0.97 | 0.99 | 59*P5A100E21**16 |
| CAP**6025A** | 0.97 | 0.99 | 59*P5A100E21**16 |
| CNPH*4821A** | 0.99 | 1.03 | 59*P5A100E21**16 |
| CNPH*6024A** | 0.98 | 0.99 | 59*P5A100E21**16 |
| CNPH*6124A** | 0.96 | 0.97 | 59*P5A100E21**16 |
| CNPV*4821A** | 0.99 | 1.03 | 59*P5A100E21**16 |
| CNPV*4824A** | 0.99 | 1.03 | 59*P5A100E21**16 |
| CNPV*6024A** | 0.98 | 0.99 | 59*P5A100E21**16 |
| CNPV*6124A** | 0.97 | 0.96 | 59*P5A100E21**16 |
| CSPH*4812A** | 0.99 | 1.02 | 59*P5A100E21**16 |
| CSPH*6012A** | 0.98 | 0.98 | 59*P5A100E21**16 |
| CAP**4823A** | 0.98 | 1.00 | 59*P5A120E24**22 |
| CAP**4824A** | 0.98 | 0.98 | 59*P5A120E24**22 |
| CAP**6024A** | 0.96 | 0.96 | 59*P5A120E24**22 |
| CAP**6025A** | 0.96 | 0.96 | 59*P5A120E24**22 |
| CNPH*4821A** | 0.98 | 1.00 | 59*P5A120E24**22 |
| CNPH*6024A** | 0.98 | 0.97 | 59*P5A120E24**22 |
| CNPH*6124A** | 0.95 | 0.95 | 59*P5A120E24**22 |
| CNPV*4824A** | 0.98 | 1.00 | 59*P5A120E24**22 |
| CNPV*6024A** | 0.98 | 0.97 | 59*P5A120E24**22 |
| CNPV*6124A** | 0.97 | 0.94 | 59*P5A120E24**22 |

| HEATING INDOOR MODEL | CAPACITY | POWER | FURNACE MODEL |
|---|---|---|---|
| CSPH*4812A** | 0.98 | 0.99 | 59*P5A120E24**22 |
| CSPH*6012A** | 0.98 | 0.96 | 59*P5A120E24**22 |

See note on pg. 65

# HEAT PUMP HEATING PERFORMANCE CONTINUED

| INDOOR AIR | | OUTDOOR COIL ENTERING AIR TEMPERATURES °F (°C) | | | | | | | | | | | | | | | | | | | | | | | |
|---|---|---|---|---|---|---|---|---|---|---|---|---|---|---|---|---|---|---|---|---|---|---|---|---|---|
| | | −3 (−19.4) | | | 7 (−13.9) | | | 17 (−8.3) | | | 27 (−2.8) | | | 37 (2.8) | | | 47 (8.3) | | | 57 (13.9) | | | 67 (19.4) | | |
| EDB °F (°C) | CFM | Capacity MBtuh | | Total Sys. KW† | Capacity MBtuh | | Total Sys. KW† | Capacity MBtuh | | Total Sys. KW† | Capacity MBtuh | | Total Sys. KW† | Capacity MBtuh | | Total Sys. KW† | Capacity MBtuh | | Total Sys. KW† | Capacity MBtuh | | Total Sys. KW† | Capacity MBtuh | | Total Sys. KW† |
| | | Total | Integ* | | Total | Integ* | | Total | Integ* | | Total | Integ* | | Total | Integ* | | Total | Integ* | | Total | Integ* | | Total | Integ* | |
| 25HCB360A30 Outdoor Section With FY4ANF060 Indoor Section | | | | | | | | | | | | | | | | | | | | | | | | | |
| 65 (18.3) | 1750 | 25.07 | 23.07 | 3.86 | 30.90 | 28.40 | 4.00 | 37.17 | 33.89 | 4.16 | 43.81 | 38.91 | 4.34 | 51.11 | 46.51 | 4.54 | 59.85 | 59.85 | 4.79 | 68.95 | 68.95 | 5.02 | 78.00 | 78.00 | 5.31 |
| | 2000 | 25.62 | 23.57 | 3.93 | 31.49 | 28.94 | 4.06 | 37.79 | 34.45 | 4.20 | 44.47 | 39.50 | 4.36 | 51.96 | 47.28 | 4.54 | 60.88 | 60.88 | 4.74 | 69.47 | 69.47 | 4.95 | 78.33 | 78.33 | 5.20 |
| | 2250 | 26.13 | 24.04 | 4.01 | 32.03 | 29.44 | 4.13 | 38.34 | 34.96 | 4.26 | 45.07 | 40.03 | 4.40 | 52.72 | 47.97 | 4.57 | 61.49 | 61.49 | 4.73 | 69.75 | 69.75 | 4.92 | 77.76 | 77.76 | 5.13 |
| 70 (21.1) | 1750 | 24.34 | 22.40 | 4.03 | 30.22 | 27.77 | 4.19 | 36.54 | 33.32 | 4.36 | 43.21 | 38.37 | 4.55 | 50.41 | 45.87 | 4.76 | 58.98 | 58.98 | 5.03 | 68.13 | 68.13 | 5.26 | 77.06 | 77.06 | 5.56 |
| | 2000 | 24.89 | 22.90 | 4.10 | 30.80 | 28.30 | 4.24 | 37.17 | 33.89 | 4.40 | 43.87 | 38.96 | 4.57 | 51.17 | 46.57 | 4.75 | 60.00 | 60.00 | 4.97 | 68.71 | 68.71 | 5.18 | 77.50 | 77.50 | 5.44 |
| | 2250 | 25.40 | 23.37 | 4.18 | 31.34 | 28.80 | 4.31 | 37.72 | 34.39 | 4.45 | 44.46 | 39.49 | 4.60 | 51.85 | 47.19 | 4.77 | 60.72 | 60.72 | 4.95 | 69.06 | 69.06 | 5.15 | 77.77 | 77.77 | 5.39 |
| 75 (23.9) | 1750 | 23.57 | 21.68 | 4.21 | 29.50 | 27.11 | 4.38 | 35.86 | 32.70 | 4.57 | 42.56 | 37.80 | 4.77 | 49.72 | 45.25 | 4.99 | 57.81 | 57.81 | 5.26 | 67.28 | 67.28 | 5.51 | 76.15 | 76.15 | 5.82 |
| | 2000 | 24.12 | 22.19 | 4.29 | 30.09 | 27.65 | 4.44 | 36.50 | 33.28 | 4.60 | 43.24 | 38.40 | 4.78 | 50.48 | 45.93 | 4.98 | 58.94 | 58.94 | 5.21 | 67.93 | 67.93 | 5.43 | 76.69 | 76.69 | 5.70 |
| | 2250 | 24.63 | 22.66 | 4.37 | 30.63 | 28.15 | 4.51 | 37.07 | 33.80 | 4.66 | 43.83 | 38.93 | 4.82 | 51.15 | 46.54 | 5.00 | 59.80 | 59.80 | 5.19 | 68.35 | 68.35 | 5.40 | 76.95 | 76.95 | 5.64 |

| HEATING INDOOR MODEL | CAPACITY | POWER | FURNACE MODEL |
|---|---|---|---|
| *FY5BNB060 | 1.00 | 1.00 | |
| FB4CNF060 | 0.95 | 0.97 | |
| FB4CNF060 | 0.98 | 1.00 | |
| FE4ANB006 | 0.98 | 0.95 | |
| FV4BNB006 | 0.98 | 0.95 | |
| FX4CN(B,F)060 | 0.98 | 0.95 | |
| FX4DN(B,F)061 | 0.99 | 0.94 | |
| FY4ANB060 | 1.00 | 1.00 | |
| CAP**6021A** | 0.97 | 0.99 | |
| CAP**6024A** | 0.98 | 0.97 | |
| CAP**6025A** | 0.98 | 0.97 | |
| CNPH*6024A** | 0.98 | 0.98 | |
| CNPH*6124A** | 0.98 | 0.98 | |
| CNPV*6024A** | 0.98 | 0.98 | |
| CNPV*6124A** | 1.00 | 0.97 | |
| CSPH*6012A** | 0.98 | 0.97 | |
| CAP**6021A** | 0.94 | 0.96 | 58CV(A,X)110−20 |
| CNPH*6024A** | 0.96 | 0.99 | 58CV(A,X)110−20 |
| CNPH*6124A** | 0.98 | 0.99 | 58CV(A,X)110−20 |
| CSPH*6012A** | 0.96 | 0.97 | 58CV(A,X)110−20 |
| CAP**6024A** | 0.96 | 0.97 | 58CV(A,X)135−22 |
| CNPH*6024A** | 0.95 | 0.97 | 58CV(A,X)135−22 |
| CNPH*6124A** | 0.98 | 0.97 | 58CV(A,X)135−22 |
| CNPV*6024A** | 0.95 | 0.97 | 58CV(A,X)135−22 |
| CNPV*6124A** | 0.98 | 0.96 | 58CV(A,X)135−22 |
| CSPH*6012A** | 0.96 | 0.96 | 58CV(A,X)135−22 |
| CAP**6024A** | 0.96 | 0.96 | 58CV(A,X)155−22 |
| CNPH*6024A** | 0.95 | 0.96 | 58CV(A,X)155−22 |
| CNPH*6124A** | 0.98 | 0.96 | 58CV(A,X)155−22 |
| CNPV*6024A** | 0.95 | 0.96 | 58CV(A,X)155−22 |
| CNPV*6124A** | 0.98 | 0.95 | 58CV(A,X)155−22 |

| HEATING INDOOR MODEL | CAPACITY | POWER | FURNACE MODEL |
|---|---|---|---|
| CSPH*6012A** | 0.96 | 0.95 | 58CV(A,X)155−22 |
| CNPH*6024A** | 0.99 | 1.03 | 58HDV080−−20 |
| CNPH*6124A** | 1.00 | 1.01 | 58HDV080−−20 |
| CNPV*6024A** | 0.98 | 1.00 | 58HDV080−−20 |
| CNPV*6124A** | 1.00 | 1.00 | 58HDV080−−20 |
| CSPH*6012A** | 0.98 | 0.99 | 58HDV080−−20 |
| CAP**6025A** | 0.98 | 1.01 | 58HDV100−−20 |
| CNPH*6024A** | 0.98 | 1.01 | 58HDV100−−20 |
| CNPH*6124A** | 0.99 | 1.00 | 58HDV100−−20 |
| CNPV*6024A** | 0.98 | 1.01 | 58HDV100−−20 |
| CNPV*6024A** | 0.98 | 1.00 | 58HDV100−−20 |
| CNPV*6124A** | 0.98 | 0.98 | 58HDV100−−20 |
| CNPV*6124A** | 0.99 | 0.99 | 58HDV100−−20 |
| CSPH*6012A** | 0.98 | 0.99 | 58HDV100−−20 |
| CNPH*6024A** | 0.97 | 1.01 | 58ME(B,C)080−16 |
| CNPH*6124A** | 0.98 | 1.00 | 58ME(B,C)080−16 |
| CSPH*6012A** | 0.98 | 1.01 | 58ME(B,C)080−16 |
| CAP**6021A** | 0.97 | 0.99 | 58ME(B,C)100−20 |
| CNPH*6024A** | 0.97 | 0.99 | 58ME(B,C)100−20 |
| CNPH*6124A** | 0.97 | 0.97 | 58ME(B,C)100−20 |
| CSPH*6012A** | 0.97 | 0.98 | 58ME(B,C)100−20 |
| CAP**6024A** | 0.97 | 0.98 | 58ME(B,C)120−20 |
| CNPH*6024A** | 0.97 | 0.98 | 58ME(B,C)120−20 |
| CNPH*6124A** | 0.10 | 0.10 | 58ME(B,C)120−20 |
| CNPV*6024A** | 0.97 | 0.98 | 58ME(B,C)120−20 |
| CNPV*6124A** | 0.98 | 0.96 | 58ME(B,C)120−20 |
| CSPH*6012A** | 0.97 | 0.97 | 58ME(B,C)120−20 |
| CNPH*6124A** | 0.99 | 1.02 | 58MV(B,C)080−20 |
| CNPH*6124A** | 0.98 | 1.01 | 58MV(B,C)100−20 |
| CNPH*6124A** | 0.98 | 0.99 | 58MV(B,C)120−20 |

| HEATING INDOOR MODEL | CAPACITY | POWER | FURNACE MODEL |
|---|---|---|---|
| CNPV*6124A** | 0.98 | 0.99 | 58MV(B,C)120−20 |
| CAP**6021A** | 0.97 | 0.99 | 58PH*090−16 |
| CNPH*6024A** | 0.97 | 1.00 | 58PH*090−16 |
| CSPH*6012A** | 0.97 | 0.98 | 58PH*090−16 |
| CAP**6021A** | 0.98 | 0.99 | 58PH*110−20 |
| CNPH*6024A** | 0.97 | 0.98 | 58PH*110−20 |
| CNPH*6124A** | 0.98 | 0.97 | 58PH*110−20 |
| CSPH*6012A** | 0.97 | 0.97 | 58PH*110−20 |
| CAP**6024A** | 0.97 | 0.99 | 58PH*135−20 |
| CNPH*6024A** | 0.97 | 0.99 | 58PH*135−20 |
| CNPH*6124A** | 0.98 | 0.98 | 58PH*135−20 |
| CNPV*6024A** | 0.97 | 0.99 | 58PH*135−20 |
| CNPV*6124A** | 0.98 | 0.97 | 58PH*135−20 |
| CSPH*6012A** | 0.97 | 0.97 | 58PH*135−20 |
| CNPH*6024A** | 0.97 | 0.99 | 58VLR120−20 |
| CSPH*6012A** | 0.97 | 0.97 | 58VLR120−20 |
| CAP**6024A** | 0.97 | 0.99 | 59*N*A120V24**22 |
| CAP**6025A** | 0.97 | 0.99 | 59*N*A120V24**22 |
| CNPH*6024A** | 0.96 | 0.99 | 59*N*A120V24**22 |
| CNPH*6124A** | 0.97 | 0.98 | 59*N*A120V24**22 |
| CNPV*6024A** | 0.96 | 0.99 | 59*N*A120V24**22 |
| CNPV*6124A** | 0.97 | 0.97 | 59*N*A120V24**22 |
| CSPH*6012A** | 0.97 | 0.98 | 59*N*A120V24**22 |
| CAP**6024A** | 0.96 | 0.99 | 59*P5A120E24**22 |
| CAP**6025A** | 0.96 | 0.99 | 59*P5A120E24**22 |
| CNPH*6024A** | 0.96 | 0.99 | 59*P5A120E24**22 |
| CNPH*6124A** | 0.97 | 0.98 | 59*P5A120E24**22 |
| CNPV*6024A** | 0.96 | 0.99 | 59*P5A120E24**22 |
| CNPV*6124A** | 0.97 | 0.97 | 59*P5A120E24**22 |
| CSPH*6012A** | 0.97 | 0.98 | 59*P5A120E24**22 |

**NOTE**: When the required data falls between the published data, interpolation may be performed. Extrapolation is not an acceptable practice.
* The Btuh heating capacity values shown are net integrated values from which the defrost effect has been subtracted. The Btuh heating from supplement heaters should be added to those values to obtain total system capacity.
† The kW values include the compressor, outdoor fan motor, and indoor blower motor. The kW from supplement heaters should be added to these values to obtain total system kilowatts.
**EDB** — Entering Dry Bulb

# GUIDE SPECIFICATIONS
# GENERAL

## System Description

Outdoor-mounted, air-cooled, split-system heat pump unit suitable for ground or rooftop installation. Unit consists of a hermetic compressor, an air-cooled coil, propeller-type condenser fan, and a control box. Unit will discharge supply air upward as shown on contract drawings. Unit will be used in a refrigeration circuit to match up to a packaged fan coil or coil unit.

## Quality Assurance

— Unit will be rated in accordance with the latest edition of AHRI Standard 240.

— Unit will be certified for capacity and efficiency, and listed in the latest AHRI directory.

— Unit construction will comply with latest edition of ANSI/ ASHRAE and with NEC.

— Unit will be constructed in accordance with UL standards and will carry the UL label of approval. Unit will have C-UL approval.

— Unit cabinet will be capable of withstanding Federal Test Method Standard No. 141 (Method 6061) 500-hr salt spray test.

— Air-cooled condenser coils are pressure tested and the outdoor unit is leak tested.

— Unit constructed in ISO9001 approved facility.

## Delivery, Storage, and Handling

— Unit will be shipped as single package only and is stored and handled per unit manufacturer's recommendations.

## Warranty (for inclusion by specifying engineer)

— U.S. and Canada only.

# PRODUCTS

## Equipment

— Factory assembled, single piece, air-cooled heat pump unit. Contained within the unit enclosure is all factory wiring, piping, controls, compressor, refrigerant charge Puron® (R-410A), and special features required prior to field start-up.

## Unit Cabinet

— Unit cabinet will be constructed of galvanized steel, bonderized, and coated with a powder coat paint.

## Fans

— Condenser fan will be direct-drive propeller type, discharging air upward.

— Condenser fan motors will be totally enclosed, 1-phase type with class B insulation and permanently lubricated bearings.

— Shafts will be corrosion resistant.

— Fan blades will be statically and dynamically balanced.

— Condenser fan openings will be equipped with steel wire safety guards.

## Compressor

— Compressor will be hermetically sealed.

— Compressor will be mounted on rubber vibration isolators.

## Condenser Coil

— Condenser coil will be air cooled.

— Coil will be constructed of aluminum fins mechanically bonded to copper tubes which are then cleaned, dehydrated, and sealed.

## Refrigeration Components

— Refrigeration circuit components will include liquid-line shutoff valve with sweat connections, vapor-line shutoff valve with sweat connections, system charge of Puron® (R-410A) refrigerant, POE compressor oil, accumulator, and reversing valve.

## Operating Characteristics

— The capacity of the unit will meet or exceed _____ Btuh at a suction temperature of _____ °F/°C. The power consumption at full load will not exceed _____ kW.

— Combination of the unit and the evaporator or fan coil unit will have a total net cooling capacity of _____ Btuh or greater at conditions of _____ CFM entering air temperature at the evaporator at _____ °F wet bulb and _____ °F/°C dry bulb, and air entering the unit at _____ °F/°C.

— The system will have a SEER of _____ Btuh/watt or greater at DOE conditions.

## Electrical Requirements

— Nominal unit electrical characteristics will be _____ v, single phase, 60 hz. The unit will be capable of satisfactory operation within voltage limits of _____ v to _____ v.

— Nominal unit electrical characteristics will be _____ v, three phase, 60 hz. The unit will be capable of satisfactory operation within voltage limits of _____ v to _____ v.

— Unit electrical power will be single point connection.

— Control circuit will be 24v.

## Special Features

— Refer to section of this literature identifying accessories and descriptions for specific features and available enhancements.

Copyright 2011 Carrier Corp. • 7310 W. Morris St. • Indianapolis, IN 46231
Printed in U.S.A. Edition Date: 09/11 Catalog No. 25HCB3-5PD
Manufacturer reserves the right to discontinue, or change at any time, specifications or designs without notice and without incurring obligations.
Replaces: 25HCB3-4PD