25HCC5
Comfort™ 15 Heat Pump
with Puron® Refrigerant
1–1/2 To 5 Nominal Tons

Carrier
turn to the experts

Product Data

Puron™
the environmentally sound refrigerant

Comfort™ SERIES

Carrier's heat pumps with Puron® refrigerant provide a collection of features unmatched by any other family of equipment. The 25HCC5 has been designed utilizing Carrier's Puron refrigerant. The environmentally sound refrigerant allows consumers to make a responsible decision in the protection of the earth's ozone layer.

As an Energy Star® Partner, Carrier Corporation has determined that this product meets the Energy Star® guidelines for energy efficiency. Refer to the combination ratings in the Product Data for system combinations that meet Energy Star® guidelines.

NOTE: Ratings contained in this document are subject to change at any time. Always refer to the AHRI directory (www.ahridirectory.org) for the most up-to-date ratings information.

INDUSTRY LEADING FEATURES / BENEFITS

Efficiency

- 15.3 SEER/ 11.0 - 13.0 EER/ 7.7 - 9.0 HSPF (Nominal)
- Microtube Technology™ refrigeration system
- Indoor air quality accessories available

Sound

- Sound level as low as 68 dBA

Comfort

- System supports Thermidistat™ or standard thermostat controls

Reliability

- Puron® refrigerant - environmentally sound, won't deplete the ozone layer and low lifetime service cost.
- Front-seating service valves
- Scroll compressor
- Internal pressure relief valve
- Internal thermal overload
- High pressure switch
- Loss of charge switch
- Filter drier
- Balanced refrigeration system for maximum reliability

Durability

WeatherArmor™ protection package:

- Solid, durable sheet metal construction
- Steel louver coil guard
- Baked-on, complete coverage, powder paint

Applications

- Long-line - up to 250 feet (76.20 m) total equivalent length, up to 200 feet (60.96 m) condenser above evaporator, or up to 80 ft. (24.38 m) evaporator above condenser (See Longline Guide for more information.)
- Low ambient (down to -20°F/-28.9°C) with accessory kit

MODEL NUMBER NOMENCLATURE

1	2	3	4	5	6	7	8	9	10	11	12	13
N	N	A	A	A/N	N	N	N	A/N	A/N	A/N	N	N
2	**5**	**H**	**C**	**C**	**5**	**3**	**6**	**A**	**0**	**0**	**3**	1
Product Series		Product Family	Tier	Major Series	SEER	Cooling Capacity		Variations	Open	Open	Voltage	Minor Series
25 = HP		H = RES HP	C=Comfort	C = Puron	5=15 SEER			A = Standard	0=Not Defined	0=Not Defined	3=208/230–1	0, 1, 2...

Puron™ the environmentally sound refrigerant

AHRI CERTIFIED™ www.ahridirectory.org

Use of the AHRI Certified TM Mark indicates a manufacturer's participation in the program For verification of certification for individual products, go to www.ahridirectory.org.

ISO 9001:2000 QMI REGISTERED

c UL US

ENERGY STAR

This product has been designed and manufactured to meet Energy Star® criteria for energy efficiency when matched with appropriate coil components. However, proper refrigerant charge and proper air flow are critical to achieve rated capacity and efficiency. Installation of this product should follow all manufacturing refrigerant charging and air flow instructions. **Failure to confirm proper charge and air flow may reduce energy efficiency and shorten equipment life.**

STANDARD FEATURES

Feature	**18**	**24**	**30**	**36**	**42**	**48**	**60**
Puron Refrigerant	X	X	X	X	X	X	X
Maximum SEER Rating*	14.5	15.3	15.0	15.0	15.3	15.0	15.0
Scroll Compressor	X	X	X	X	X	X	X
Louvered Coil Guard	X	X	X	X	X	X	X
Field Installed Filter Drier	X	X	X	X	X	X	X
Front Seating Service Valves	X	X	X	X	X	X	X
Internal Pressure Relief Valve	X	X	X	X	X	X	X
Internal Thermal Overload	X	X	X	X	X	X	X
Long Line capability	X	X	X	X	X	X	X
Low Ambient capability with Kit	X	X	X	X	X	X	X
Suction Line Accumulator	X	X	X	X	X	X	X
High Pressure Switch	X	X	X	X	X	X	X
Loss of Charge Switch	X	X	X	X	X	X	X

* Based on tested combination ratings
X = Standard

PHYSICAL DATA

UNIT SIZE SERIES	18	24	30	36	42	48	60
Operating Weight lb (kg)	169	200	196	215	245	260	294
Shipping Weight lb (kg)	207	233	242	257	290	303	345
Compressor Type	Scroll						
REFRIGERANT	R−410A						
Control	TXV (R−410A Hard Shutoff)						
Charge (lb)	5.6	7.6	7.0	7.4	8.9	9.6	12.5
COND FAN	Propeller Type, Direct Drive						
Air Discharge	Vertical						
Air Qty (CFM)	2233	3223	3223	3810	3810	4046	4046
Motor HP	1/12	1/12	1/12	1/5	1/5	1/4	1/4
Motor RPM	800	800	800	800	800	800	800
COND COIL							
Face Area (Sq ft)	15.09	20.12	20.12	22.63	17.60	20.12	25.15
Fins per In.	20	20	20	20	20	20	20
Rows	1	1	1	1	2	2	2
Circuits	4	5	5	6	7	7	9
VALVE CONNECT. (In. ID)							
Vapor	5/8	5/8	3/4	3/4	7/8	7/8	7/8
Liquid	3/8						
REFRIGERANT TUBES (In. OD)							
Rated Vapor*	5/8	5/8	3/4	3/4	7/8	7/8	1−1/8
Max Liquid Line	3/8”						

*Units are rated with 25 ft (7.6 m) of lineset length. See *Vapor Line Sizing and Cooling Capacity Loss* table when using other sizes and lengths of lineset.

Note: See unit Installation Instruction for proper installation.

VAPOR LINE SIZING AND COOLING CAPACITY LOSS

Acceptable vapor line diameters provide adequate oil return to the compressor while avoiding excessive capacity loss. The suction line diameters shown in the chart below are acceptable for HP systems with Puron refrigerant:

VAPOR LINE SIZING AND COOLING CAPACITY LOSSES - PURON® REFRIGERANT
1- STAGE HEAT PUMP APPLICATIONS

Unit Nominal Size (Btuh)	Maximum Liquid Line Diameters (In. OD)	Vapor Line Diameters (In.) OD	Cooling Capacity Loss (%) Total Equivalent Line Length ft. (m)								
			Standard Application		Long Line Application Requires Accessories						
			26−50 (7.9−15.2)	51−80 (15.5−24.4)	81−100 (24.7−30.5)	101−125 (30.8−38.1)	126−150 (38.4−45.7)	151−175 (46.0−50.3)	176−200 (53.6−60.0)	201−225 (61.3−68.6)	226−250 (68.9−76.2)
18,000 1−Stage HP with Puron	3/8	1/2	1	2	3	4	6	7	8	9	10
		5/8	0	0	1	1	1	2	2	3	3
24,000 1−Stage HP with Puron	3/8	5/8	0	1	1	2	3	3	4	4	5
		3/4	0	0	0	0	1	1	1	1	1
30,000 1−Stage HP with Puron	3/8	5/8	1	2	3	3	4	5	6	7	8
		3/4	0	0	1	1	1	2	2	2	3
		7/8	0	0	0	0	1	1	1	1	1
36,000 1−Stage HP with Puron	3/8	5/8	1	2	4	5	6	7	9	10	11
		3/4	0	0	1	1	2	2	3	3	4
		7/8	0	0	0	0	1	1	1	1	2
42,000 1−Stage HP with Puron	3/8	3/4	0	1	2	2	3	4	4	5	6
		7/8	0	0	1	1	1	2	2	2	3
48,000 1−Stage HP with Puron	3/8	3/4	0	1	2	3	4	5	5	6	7
		7/8	0	0	1	1	2	2	2	3	3
60,000+ 1−Stage HP with Puron	3/8	3/4	1	2	4	5	6	7	9	10	11
		7/8	0	1	2	2	3	4	4	5	5
		1−1/8	0	0	0	1	1	1	1	1	1

Standard Length = 80 ft. (24.4 m) or less total equivalent length

Applications in this area are long line. Accessories are required as shown recommended on Long Line Application Guidelines

Applications in this area may have height restrictions that limit allowable total equivalent length, when outdoor unit is below indoor unit See Long Line Application Guidelines

REFRIGERANT PIPING LENGTH LIMITATIONS

Maximum Line Lengths:

The maximum allowable total equivalent length for heat pumps varies depending on the vertical separation. See the tables below for allowable lengths depending on whether the outdoor unit is on the same level, above or below the outdoor unit.

MAXIMUM LINE LENGTHS FOR HEAT PUMP APPLICATIONS

	MAXIMUM ACTUAL LENGTH ft (m)	MAXIMUM EQUIVALENT LENGTH† ft (m)	MAXIMUM VERTICAL SEPARATION ft (m)
Units on equal level	200 (61)	250 (76.2)	N/A
Outdoor unit ABOVE indoor unit	200 (61)	250 (76.2)	200 (61)
Outdoor unit BELOW indoor unit	See Table *'Maximum Total Equivalent Length: Outdoor Unit BELOW Indoor Unit'*		

† Total equivalent length accounts for losses due to elbows or fitting. See the Long Line Guideline for details.

25HCC5

MAXIMUM TOTAL EQUIVALENT LENGTH† - OUTDOOR UNIT BELOW INDOOR UNIT

Size	Liquid Line Diameter w/ TXV	HP with Puron® Refrigerant – Maximum Total Equivalent Length† Vertical Separation ft (m) Outdoor unit BELOW indoor unit;						
		0 – 20 (0 – 6.1)	21 – 30 (6.4 – 9.1)	31 – 40 (9.4 – 12.2)	41 – 50 (12.5 – 15.2)	51 – 60 (15.5 – 18.3)	61 – 70 (18.6 – 21.3)	71 – 80 (21.6 – 24.4)
18000 HP with Puron	3/8	250*	250*	250*	250*	250*	250*	250*
24000 HP with Puron	3/8	250*	250*	250*	250*	250*	250*	250*
30000 HP with Puron	3/8	250*	250*	250*	250*	250*	250*	250*
36000 HP with Puron	3/8	250*	250*	250*	250*	250*	250*	250*
42000 HP with Puron	3/8	250*	250*	250*	250*	250*	250*	150
48000 HP with Puron	3/8	250*	250*	250*	250*	230	160	– –
60000 HP with Puron	3/8	250*	225*	190	150	110	– –	– –

*** Maximum actual length not to exceed 200 ft (61 m)**

† Total equivalent length accounts for losses due to elbows or fitting. See the Long Line Guideline for details.

– – = outside acceptable range

LONG LINE APPLICATIONS

An application is considered Long Line when the refrigerant level in the system requires the use of accessories to maintain acceptable refrigerant management for systems reliability. Defining a system as long line depends on the liquid line diameter, actual length of the tubing, and vertical separation between the indoor and outdoor units.

For Heat Pump systems, the chart below shows when an application is considered Long Line. Beyond these lengths, long line accessories are required:

HP WITH PURON® REFRIGERANT LONG LINE DESCRIPTION FT (M)
BEYOND THESE LENGTHS, LONG LINE ACCESSORIES ARE REQUIRED

Liquid Line Size	Units On Same Level	Outdoor Below Indoor	Outdoor Above Indoor
3/8	80 (24.4)	20 (6.1) vertical or 80 (24.4) total	80 (24.4)

Note: See Long Line Guideline for details

ACCESSORIES

ORDER NUMBER	DESCRIPTION	18–30	24–30	30–30	36–30	42–30	48–30	60–30
KAACH1701AAA	CRANKCASE HTR	X	X	X				
KAACH1401AAA	CRANKCASE HTR				X			
KAACH1601AAA	CRANKCASE HTR					X		
KAACH1201AAA	CRANKCASE HTR						X	
Standard	CRANKCASE HTR							S
KSACY0101AAA	CYCLE PROTECTOR	X	X	X	X	X	X	X
KAAFT0101AAA	FREEZE THERMOSTAT	X	X	X	X	X	X	X
KSAHS1701AAA	HARD START (CAP/RELAY)	X	X	X	X	X	X	X
KHAIR0101AAA	ISOLATION RELAY	X	X	X	X	X	X	X
KSALA0301410	LOW AMBIENT PSW	X	X	X	X	X	X	X
HC32GE229	MOTOR FAN BALL BEARING	X	X	X				
HC38GE228	MOTOR FAN BALL BEARING				X	X		
HC40GE228	MOTOR FAN BALL BEARING						X	X
KSALA0601AAA	MOTORMASTER 230V	X	X	X	X	X	X	X
KHAOT0201SEC	OUTDOOR THERMOSTAT	X	X	X	X	X	X	X
KHAOT0301FST	OUTDOOR THERMOSTAT	X	X	X	X	X	X	X
KHASS0606MPK*	HEAT PUMP SNOW RACK	X	X	X	X	X	X	X
KHALS0401LLS	SOLENOID VALVE	X	X	X	X	X	X	X
KAACS0201PTC	START ASSIST PTC	X	X	X	X	X	X	X
KSASF0101AAA	SUPPORT FEET	X	X	X	X	X	X	X
KAATD0101TDR	TIME DELAY	X	X	X	X	X	X	X
KSATX0201PUR	TXV PURON HSO	X	X	X				
KSATX0301PUR	TXV PURON HSO				X	X		
KSATX0401PUR	TXV PURON HSO						X	
KSATX0501PUR	TXV PURON HSO							X

x = Accessory S = Standard

* Order through RCD–Totaline, part number KHASS0606MPK (qty 6).

ACCESSORY THERMOSTATS

THERMOSTAT / SUBBASE PKG.	DESCRIPTION
TP–PRH01–A	Programmable Thermidistat
TP–NRH01–A	Non–programmable Thermidistat
TP–PHP01	Performance Series Programmable HP Stat
TP–NHP01	Performance Series Non–programmable HP Stat
TC–PHP01	Comfort Series Programmable HP Stat
TC–NHP01	Comfort Series Non–programmable HP Stat
TB–PHP01	Base Series Programmable HP Stat
TB–NHP01	Base Series Non–programmable HP Stat
TSTATXXSEN01–B*	Outdoor Air Temperature Sensor
TSTATXXNBP01	Backplate for Non–Programmable Thermostat
TSTATXXPBP01	Backplate for Programmable Thermostat and Thermidistat™ Control
TSTATXXSBP01	Backplate for Standard Programmable Thermostat
TSTATXXBBP01	Backplate for Builder's Thermostat
TSTATXXCNV10**	Thermostat Conversion Kit (4 to 5 Wire) — 10 Pack

* Outdoor temperature sensor is an accessory for all Carrier electronic thermostats, except the non–programmable air conditioner version and builder;s thermostats. It allows the temperature at a remote location (outdoors) to be displayed on the thermostat. The outdoor air temperature sensor must be used with the HybridHeat™ (dual fuel) thermostat. The outdoor air temperature sensor is included with the Thermidistat Control and HybridHeat™ (dual fuel) thermostat.

88 Thermostat conversion kit is a 24–vac accessory that can turn a 4–wire thermostat application into a 5–wire application. This kit can also be used to replace a broken thermostat wire, or add an extra wire when needed.

ACCESSORY USAGE GUIDELINE

Accessory	REQUIRED FOR LOW–AMBIENT COOLING APPLICATIONS (Below 55°F / 12.8°C)	REQUIRED FOR LONG LINE APPLICATIONS*	REQUIRED FOR SEA COAST APPLICATIONS (Within 2 miles / 3.22 km)
Accumulator	Standard	Standard	Standard
Ball Bearing Fan Motor	Yes†	No	No
Compressor Start Assist Capacitor and Relay	Yes	Yes	No
Crankcase Heater	Yes	Yes	No
Evaporator Freeze Thermostat	Yes	No	No
Hard Shutoff TXV	Yes	Yes	Yes
Isolation Relay	Yes	No	No
Liquid Line Solenoid Valve	No	See Long–Line Application Guideline	No
Motor Master® Control or Low Ambient Switch	Yes	No	No
Support Feet	Recommended	No	Recommended

* For tubing line sets between 80 and 200 ft. (24.38 and 60.96 m) and/or 20 ft. (6.09 m) vertical differential, refer to Residential Piping and Longline Guideline.
† Additional requirement for Low–Ambient Controller (full modulation feature) MotorMaster® Control.

Accessory Description and Usage (Listed Alphabetically)

1. Ball-Bearing Fan Motor

A fan motor with ball bearings which permits speed reduction while maintaining bearing lubrication.

Usage Guideline:

Required on all units when using MotorMaster®

2. Compressor Start Assist - Capacitor and Relay

Start capacitor and relay gives a ”hard” boost to compressor motor at each start up.

Usage Guideline:

Required for reciprocating compressors in the following applications:

Long line

Low ambient cooling

Hard shut off expansion valve on indoor coil

Liquid line solenoid on indoor coil

Required for single-phase scroll compressors in the following applications:

Long line

Low ambient cooling

Suggested for all compressors in areas with a history of low voltage problems.

3. Compressor Start Assist — PTC Type

Solid state electrical device which gives a ”soft” boost to the compressor at each start-up.

Usage Guideline:

Suggested in installations with marginal power supply.

4. Crankcase Heater

An electric resistance heater which mounts to the base of the compressor to keep the lubricant warm during off cycles. Improves compressor lubrication on restart and minimizes the chance of liquid slugging.

Usage Guideline:

Required in low ambient cooling applications.

Required in long line applications.

Suggested in all commercial applications.

5. Evaporator Freeze Thermostat

An SPST temperature-actuated switch that stops unit operation when evaporator reaches freeze-up conditions.

Usage Guideline:

Required when low ambient kit has been added.

6. Isolation Relay

An SPDT relay which switches the low-ambient controller out of the outdoor fan motor circuit when the heat pump switches to heating mode.

Usage Guideline:

Required in all heat pumps where low ambient kit has been added.

7. Liquid-Line Solenoid Valve (LLS)

An electrically operated shutoff valve which stops and starts refrigerant liquid flow in response to compressor operation. It is to be installed at the outdoor unit to control refrigerant off cycle migration in the heating mode.

Usage Guideline:

An LLS is required in all long line heat pump applications to control refrigerant off cycle migration in the heating mode. See Long Line Guideline.

8. Low-Ambient Pressure Switch Kit

A long life pressure switch which is mounted to outdoor unit service valve. It is designed to cycle the outdoor fan motor in order to maintain head pressure within normal operating limits. The control will maintain working head pressure at low-ambient temperatures down to 0°F (-17.8°C)when properly installed.

Usage Guideline:

A Low-Ambient Pressure Switch or MotorMaster® Low-Ambient Controller must be used when cooling operation is used at outdoor temperatures below 55°F (12.8°C).

9. MotorMaster® Low-Ambient Controller

A fan-speed control device activated by a temperature sensor, designed to control condenser fan motor speed in response to the saturated, condensing temperature during operation in cooling mode only. For outdoor temperatures down to -20°F (-28.9°C), it maintains condensing temperature at 100°F ±10°F (37.8°C ± 6.5°C).

Usage Guideline:

A MotorMaster® Low Ambient Controller or Low-Ambient Pressure Switch must be used when cooling operation is used at outdoor temperatures below 55°F (12.8°C).

Suggested for all commercial applications.

10. Outdoor Air Temperature Sensor

Designed for use with Carrier Thermostats listed in this publication. This device enables the thermostat to display the outdoor temperature. This device also is required to enable special thermostat features such as auxiliary heat lock out.

Usage Guideline:

Suggested for all Carrier thermostats listed in this publication.

11. Outdoor Thermostat

An SPDT temperature-actuated switch which turns on supplemental electric heaters when outdoor air temperature drops below a user-selected set point.

Usage Guideline:

Electric supplemental heat applications in non-variable speed indoor units when electric heat staging is desired.

12. Secondary Outdoor Thermostat

An SPDT temperature-actuated switch which turns on third-stage of supplemental electric heaters when outdoor air temperature drops below the second-stage set point.

Usage Guideline:

Outdoor thermostat applications where electric heater is capable of three-stage operation.

13. Snow Stand

Coated wire rack which supports unit 18 in. (457.2 mm) above mounting pad to allow for drainage from unit base.

Usage Guideline:

Suggested in the following applications:

Heat pump installations in heavy snowfall areas.

Heat pump installations in snow drift locations.

Heat pump installations in areas of prolonged subfreezing temperatures.

All commercial installations.

14. Thermostatic Expansion Valve (TXV) Bi-Flow

A modulating flow-control valve which meters refrigerant liquid flow rate into the evaporator in response to the superheat of the refrigerant gas leaving the evaporator.

Usage Guideline:

Accessory required to meet AHRI rating and system reliability, where indoor not equipped.

Required in all heat pump applications designed with Puron refrigerant.

15. Time-Delay Relay

An SPST delay relay which briefly continues operation of indoor blower motor to provide additional cooling after the compressor cycles off.

Note: Most indoor unit controls include this feature. For those that do not, use the guideline below.

Usage Guideline:

Accessory required to meet AHRI rating, where indoor not equipped.

ELECTRICAL DATA

UNIT SIZE	V/PH	OPER VOLTS*		COMPR		FAN	MCA	MIN WIRE SIZE†	MIN WIRE SIZE†	MAX LENGTH ft (m)††	MAX LENGTH ft (m)††	MAX FUSE** or CKT BRK AMPS
		MAX	MIN	LRA	RLA	FLA		60° C	75° C	60° C	75° C	
18–30	208/230/1	253	197	48.0	9.00	0.5	11.8	14	14	67 (20.4)	63 (19.2)	20
24–30				58.3	12.80	0.5	16.5	14	14	48 (14.6)	45 (13.7)	25
30–30				73.0	14.10	0.5	18.1	14	14	44 (13.4	41 (12.5)	30
36–30				79.0	16.70	1.2	22.1	12	12	57 (17.4)	54 (16.5)	35
42–30				109.0	21.10	1.2	27.6	10	10	72 (21.9)	69 (21.0)	40
48–30				117.0	21.80	1.2	28.5	10	10	70 (21.3)	67 (20.4)	40
60–30				134.0	26.40	1.2	34.2	8	10	91 (27.7)	56 (17.1)	50

* Permissible limits of the voltage range at which the unit will operate satisfactorily

† If wire is applied at ambient greater than 30°C, consult table 310–16 of the NEC (ANSI/NFPA 70). The ampacity of non–metallic–sheathed cable (NM), trade name ROMEX, shall be that of 60°C conditions, per the NEC (ANSI/NFPA 70) Article 336–26. If other than uncoated (no–plated), 60 or 75°C insulation, copper wire (solid wire for 10 AWG or smaller, stranded wire for larger than 10 AWG) is used, consult applicable tables of the NEC (ANSI/NFPA 70).

‡ Length shown is as measured 1 way along wire path between unit and service panel for voltage drop not to exceed 2%.

** Time–Delay fuse.

FLA – Full Load Amps

LRA – Locked Rotor Amps

MCA – Minimum Circuit Amps

RLA – Rated Load Amps

NOTE: Control circuit is 24–V on all units and requires external power source. Copper wire must be used from service disconnect to unit.

All motors/compressors contain internal overload protection.

Complies with 2007 requirements of ASHRAE Standards 90.1

25HCC5

A-WEIGHTED SOUND POWER

UNIT SIZE– VOLTAGE, SERIES	STANDARD RATING (dBA)	TYPICAL OCTAVE BAND SPECTRUM (dBA, without tone adjustment)						
		125	250	500	1000	2000	4000	8000
18–30	72	50.5	60.0	65.0	67.5	64.5	61.5	53.5
24–30	68	49.5	58.5	61.5	62.0	61.0	58.5	51.5
30–30	69	50.5	58.5	61.5	64.0	61.5	58.5	51.5
36–30	70	54.5	57.5	63.0	66.0	64.0	61.0	54.0
42–30	72	56.5	64.5	66.5	66.5	64.5	61.0	54.5
48–30	72	58.5	63.0	65.5	67.0	63.5	60.0	52.0
60–30	73	58.5	62.5	65.0	67.0	64.0	61.0	56.5

NOTE: Tested in accordance with AHRI Standard 270–08 (not listed in AHRI).

CHARGING SUBCOOLING (TXV-TYPE EXPANSION DEVICE)

UNIT SIZE– VOLTAGE, SERIES	REQUIRED SUBCOOLING °F (°C)
18–30	12 (6.7)
24–30	14 (7.8)
30–30	10 (5.6)
36–30	8 (4.4)
42–30	10 (5.6)
48–30	11 (6.1)
60–30	10 (5.6)

DIMENSIONS - ENGLISH

UNIT	SERIES	ELECTRICAL CHARACTERISTICS				A	B	C	D	E	F	G	K	L	M	N	P	OPERATING WEIGHT (lbs)	SHIPPING WEIGHT (lbs)	SHIPPING DIMENSIONS (L x W x H)
25HCC518	0	X	O	O	O	31 3/16"	28 15/16"	3 3/4"	5/8"	6 9/16"	24 11/16"	9 1/8"	2 13/16"	1/2"	16"	15"	14"	169	207	32 5/16" X 35 1/2" X 32 9/16"
25HCC524	0	X	O	O	O	35"	32 5/16"	3 3/4"	5/8"	6 9/16"	28 7/16"	9 1/8"	2 13/16"	1/2"	15 3/4"	16 3/4"	16 1/2"	200	233	36 1/8" X 39 1/4" X 35 15/16"
25HCC530	0	X	O	O	O	35"	32 5/16"	3 3/4"	3/4"	6 9/16"	28 7/16"	9 1/8"	2 13/16"	1/2"	16 1/4"	16"	15 1/2"	196	242	36 1/8" X 39 1/4" X 35 15/16"
25HCC536	0	X	O	O	O	35"	35 3/4"	3 3/4"	3/4"	6 9/16"	28 7/16"	9 1/8"	2 13/16"	1/2"	15 3/4"	16 3/4"	17"	215	257	36 1/8" X 39 1/4" X 39 3/8"
25HCC542	0	X	O	O	O	35"	28 15/16"	3 7/8"	7/8"	6 9/16"	28 7/16"	9 1/8"	2 15/16"	5/8"	17"	16 3/4"	14 3/4"	245	290	36 1/8" X 39 1/4" X 32 9/16"
25HCC548	0	X	O	O	O	35"	28 15/16"	3 7/8"	7/8"	6 9/16"	28 7/16"	9 1/8"	2 15/16"	5/8"	16 3/4"	16 1/4"	14"	260	303	36 1/8" X 39 1/4" X 32 9/16"
25HCC560	0	X	O	O	O	35"	39 1/8"	3 7/8"	7/8"	6 9/16"	28 7/16"	9 1/8"	2 15/16"	5/8"	17 1/4"	16 1/4"	18 1/4"	294	345	36 1/8" X 39 1/4" X 42 3/4"
		208-230-1-60	230-1-60	208/230-3-60	460-3-60															

X = YES
O = NO

NOTES:

1. ALLOW 30" CLEARANCE TO SERVICE SIDE OF UNIT, 48" ABOVE UNIT, 6" ON ONE SIDE, 12" ON REMAINING SIDE, AND 24" BETWEEN UNITS FOR PROPER AIRFLOW.
2. MINIMUM OUTDOOR OPERATING AMBIENT IN COOLING MODE IS 55°F, MAX. 125°F.
3. SERIES DESIGNATION IS THE 13TH POSITION OF THE UNIT MODEL NUMBER.
4. CENTER OF GRAVITY ⊕.
5. ALL DIMENSIONS ARE IN "INCHES" UNLESS NOTED.

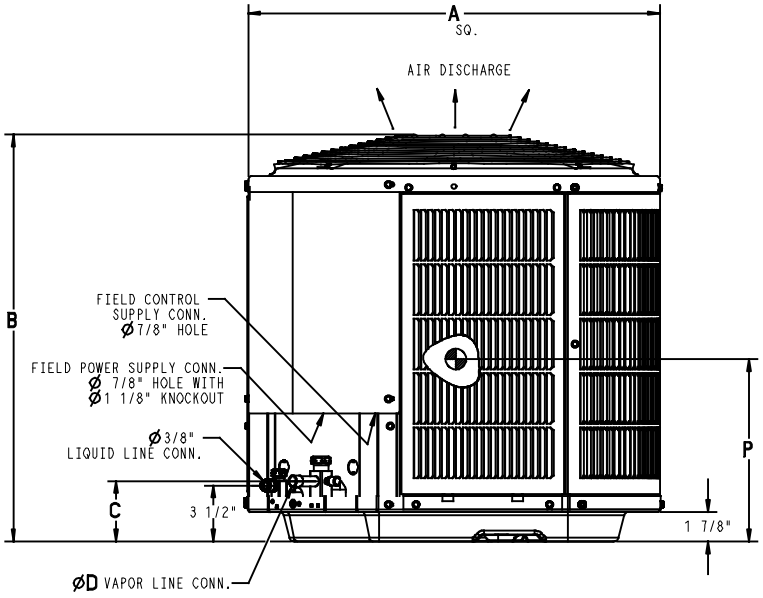

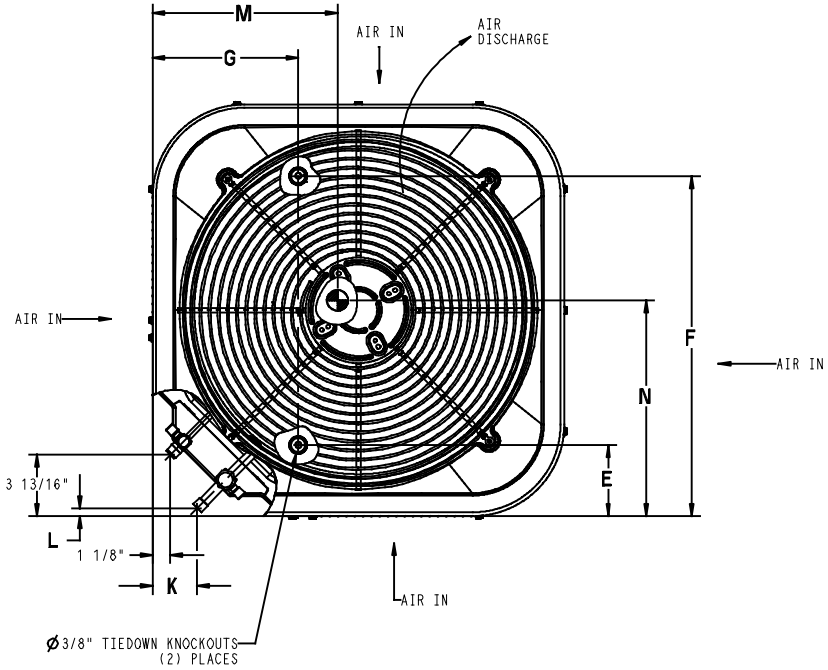

UNIT SIZE	MINIMUM MOUNTING PAD DIMENSIONS
-	26" X 26"
18	31 1/2" X 31 1/2"
24,30,36,42,48,60	35" X 35"

DIMENSIONS - SI

UNIT	SERIES	ELECTRICAL CHARACTERISTICS				A	B	C	D	E	F	G	K	L	M	N	P	OPERATING WEIGHT (Kgs)	SHIPPING WEIGHT (Kgs)	SHIPPING DIMENSIONS (L x W x H)
25HCC518	0	X	O	O	O	792.5	734.8	95.6	15.9	166.1	626.3	231.3	70.9	12.8	406.4	381.0	355.6	76.7	93.9	821.2 X 901.2 X 826.8
25HCC524	0	X	O	O	O	889.0	821.2	95.6	15.9	166.1	722.8	231.3	70.9	12.8	400.1	425.5	419.1	90.8	105.7	917.7 X 997.7 X 913.2
25HCC530	0	X	O	O	O	889.0	821.2	95.6	19.1	166.1	722.8	231.3	70.9	12.8	412.8	406.4	393.7	88.9	109.8	917.7 X 997.7 X 913.2
25HCC536	0	X	O	O	O	889.0	907.5	95.6	19.1	166.1	722.8	231.3	70.9	12.8	400.1	425.5	431.8	97.5	116.6	917.7 X 997.7 X 999.5
25HCC542	0	X	O	O	O	889.0	734.8	97.9	22.2	166.1	722.8	231.3	74.5	16.3	431.8	425.5	374.7	111.1	131.5	917.7 X 997.7 X 826.8
25HCC548	0	X	O	O	O	889.0	734.8	97.9	22.2	166.1	722.8	231.3	74.5	16.3	425.5	412.8	355.6	117.9	137.4	917.7 X 997.7 X 826.8
25HCC560	0	X	O	O	O	889.0	993.9	97.9	22.2	166.1	722.8	231.3	74.5	16.3	438.2	412.8	463.6	113.4	156.5	917.7 X 997.7 X 1085.9

208-230-1-60	230-1-60	208/230-3-60	460-3-60

X = YES
O = NO

NOTES:

1. ALLOW 762.0 CLEARANCE TO SERVICE SIDE OF UNIT, 1219.2 ABOVE UNIT, 152.4 ON ONE SIDE, 304.8 ON REMAINING SIDE, AND 609.6 BETWEEN UNITS FOR PROPER AIRFLOW.
2. MINIMUM OUTDOOR OPERATING AMBIENT IN COOLING MODE IS 13°C, MAX. 52°C.
3. SERIES DESIGNATION IS THE 13TH POSITION OF THE UNIT MODEL NUMBER.
4. CENTER OF GRAVITY ⊕.
5. ALL DIMENSIONS ARE IN "MM" UNLESS NOTED.

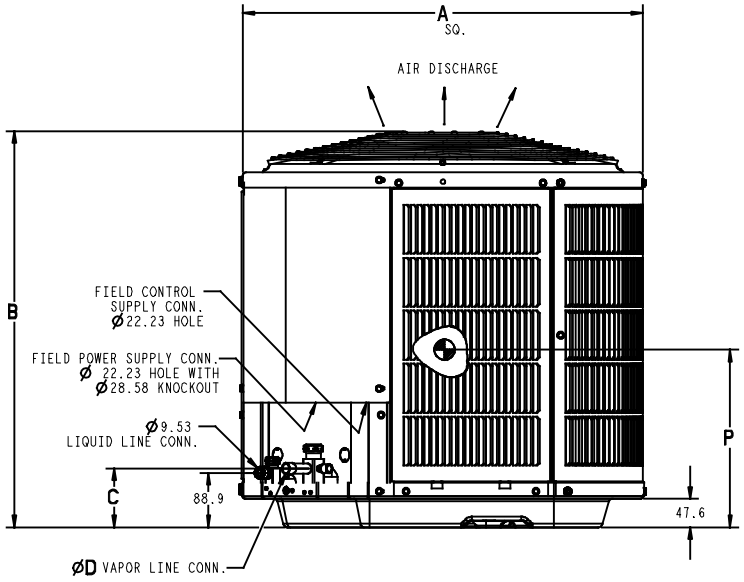

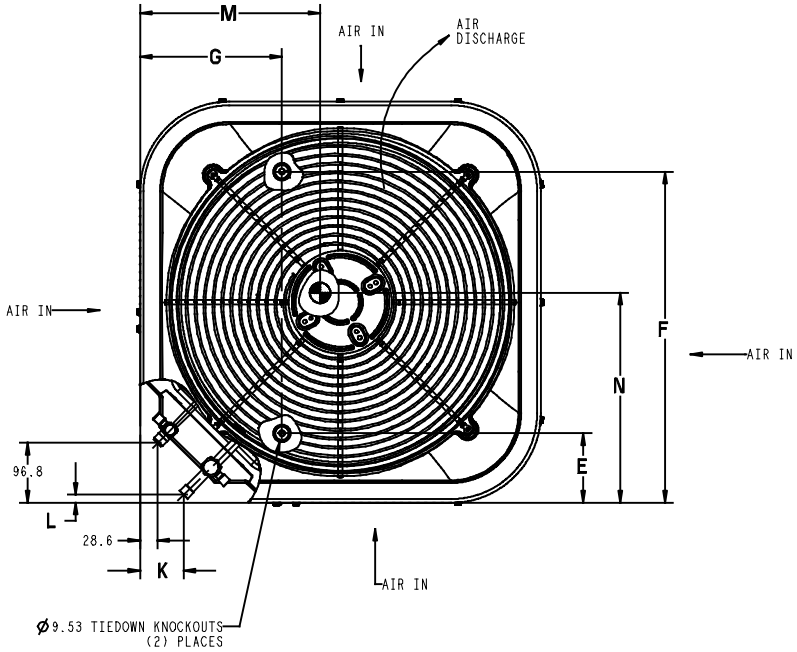

UNIT SIZE	MINIMUM MOUNTING PAD DIMENSIONS
-	660.4 X 660.4
18	800.1 X 800.1
24,30,36,42,48,60	889.0 X 889.0

25HCC5 BALANCE POINT WORKSHEET

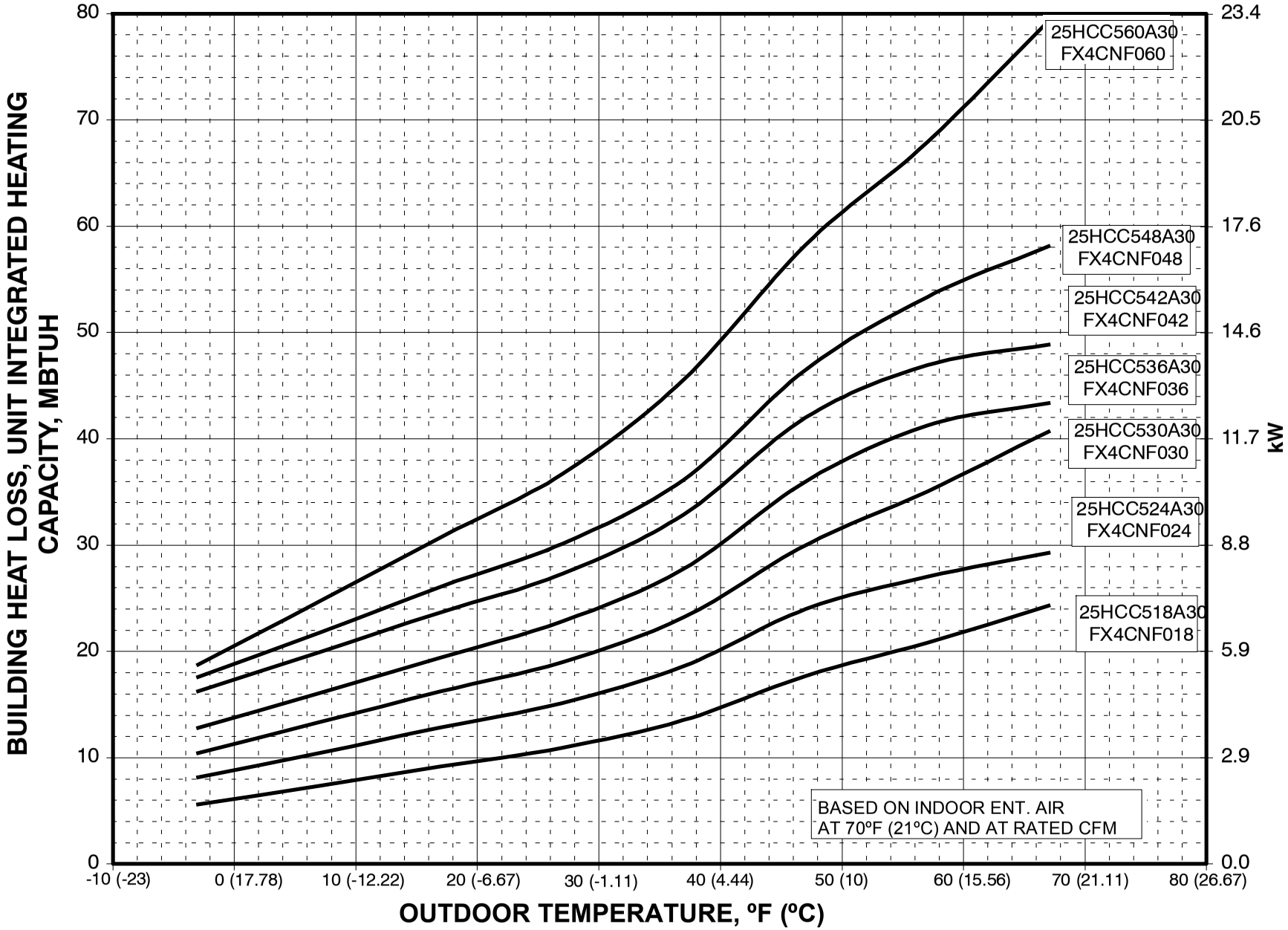

CLEARANCES

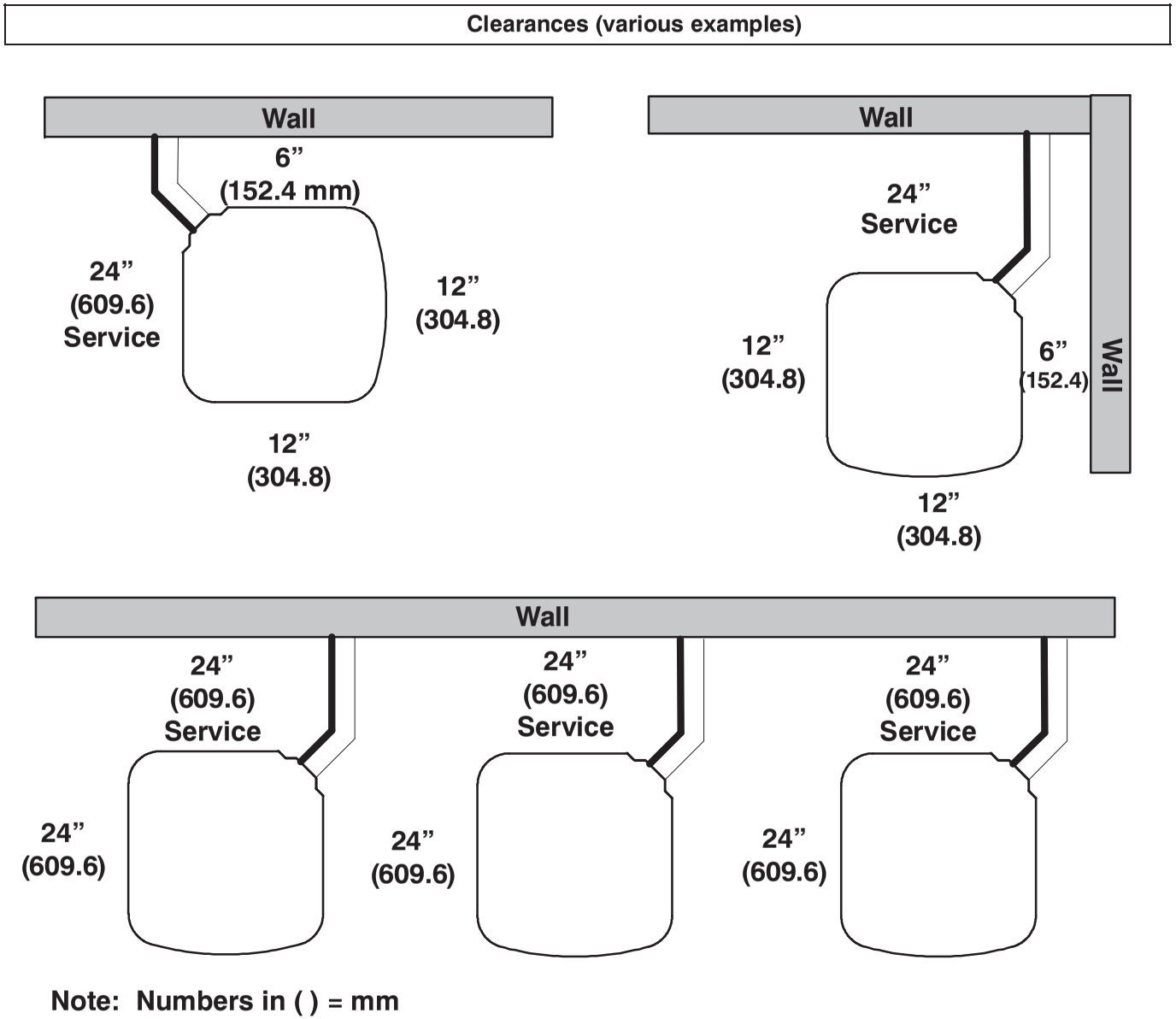

IMPORTANT: When installing multiple units in an alcove, roof well, or partially enclosed area, ensure there is adequate ventilation to prevent re-circulation of discharge air.

A07833

COMBINATION RATINGS

AHRI Ref. No.	Model Number	Coil Model Number	Furnace Model Number	Cooling Capacity	EER	SEER	High Temp		HSPF	Low Temp	
							E Capacity	E COP		H Capacity	H COP
3676275	25HCC518A**30	†FX4DNF019		17,800	12.6	15.3	17,400	3.88	8.6	10,600	2.56
3676201	25HCC518A**30	FE4ANF002+UI		17,700	12.5	15.5	17,400	3.82	8.2	10,400	2.54
3676205	25HCC518A**30	FF1ENP018		17,200	11.2	13.0	18,000	3.50	7.7	11,100	2.34
3676206	25HCC518A**30	FF1ENP019		17,500	12.0	14.5	17,600	3.74	8.0	10,700	2.48
3676207	25HCC518A**30	FF1ENP024		17,400	11.2	13.0	18,000	3.56	7.7	11,100	2.38
3676209	25HCC518A**30	FF1ENP025		17,800	12.5	15.0	17,600	3.84	8.2	10,600	2.54
3676232	25HCC518A**30	FV4BNF002		17,700	13.0	15.5	17,400	3.82	8.2	10,400	2.54
3676248	25HCC518A**30	FV4CNF002		17,700	13.0	15.5	17,400	3.82	8.2	10,400	2.54
3676260	25HCC518A**30	FX4CNF018		17,500	12.2	14.5	17,600	3.74	8.1	10,600	2.50
3676261	25HCC518A**30	FX4CNF024		17,700	12.5	15.0	17,600	3.80	8.2	10,600	2.54
3676276	25HCC518A**30	FX4DNF025		18,000	12.6	15.0	17,400	3.88	8.3	10,600	2.56
3676280	25HCC518A**30	FY4ANF018		17,200	11.2	13.0	18,000	3.52	7.7	11,100	2.36
3676281	25HCC518A**30	FY4ANF024		17,200	11.0	13.0	18,000	3.50	7.7	11,200	2.34
3675123	25HCC518A**30	CAP**1814A**	58CV(A,X)070–12	17,200	12.0	14.5	17,100	3.56	7.7	10,300	2.44
3675124	25HCC518A**30	CAP**1814A**	58PH*045–08	17,400	12.0	14.5	17,400	3.66	7.9	10,500	2.48
3675125	25HCC518A**30	CAP**1814A**+TDR		17,200	11.0	13.0	18,000	3.50	7.7	11,100	2.36
3675126	25HCC518A**30	CAP**2414A**	58CV(A,X)070–12	17,400	12.5	15.0	17,300	3.68	7.9	10,400	2.48
3675127	25HCC518A**30	CAP**2414A**	58PH*045–08	17,600	12.5	15.0	17,600	3.82	8.2	10,600	2.54
3675130	25HCC518A**30	CAP**2414A**+TDR		17,400	11.2	13.5	18,000	3.60	7.8	11,200	2.40
3675133	25HCC518A**30	CAP**2417A**	58CV(A,X)090–16	17,400	12.5	15.0	17,300	3.70	8.0	10,400	2.50
3675135	25HCC518A**30	CAP**2417A**	58ME(B,C)060–12	17,800	12.5	15.5	17,600	3.90	8.3	10,600	2.58
3675134	25HCC518A**30	CAP**2417A**	58MEB040–12	18,000	13.0	15.5	17,600	3.98	8.5	10,700	2.62
3675132	25HCC518A**30	CAP**2417A**	58MV(B,C)060–14	17,400	12.5	15.0	17,300	3.70	8.0	10,400	2.48
3675141	25HCC518A**30	CAP**2417A**	58UVB060–14	17,400	12.5	15.0	17,300	3.70	8.0	10,400	2.48
3675143	25HCC518A**30	CAP**2417A**+TDR		17,400	11.2	13.5	18,000	3.60	7.8	11,200	2.40
3675335	25HCC518A**30	CNPF*2418A**+TDR		17,400	11.2	13.5	18,000	3.64	7.8	11,200	2.40
3675344	25HCC518A**30	CNPH*2417A**	58CV(A,X)070–12	17,300	12.5	15.0	17,300	3.70	7.9	10,400	2.48
3675345	25HCC518A**30	CNPH*2417A**	58CV(A,X)090–16	17,400	12.5	15.0	17,300	3.74	8.0	10,400	2.50
3675349	25HCC518A**30	CNPH*2417A**	58HDV040––12	18,000	12.2	14.5	18,000	3.92	8.3	11,000	2.54
3675350	25HCC518A**30	CNPH*2417A**	58HDV060––12	18,000	12.2	14.5	18,000	3.94	8.4	10,900	2.56
3675348	25HCC518A**30	CNPH*2417A**	58ME(B,C)060–12	17,600	12.5	15.0	17,500	3.84	8.2	10,500	2.54
3675347	25HCC518A**30	CNPH*2417A**	58MEB040–12	17,800	12.5	15.5	17,600	3.94	8.4	10,600	2.58
3675342	25HCC518A**30	CNPH*2417A**	58MV(B,C)060–14	17,400	12.5	15.0	17,300	3.72	8.0	10,400	2.50
3675343	25HCC518A**30	CNPH*2417A**	58MV(B,C)080–14	17,300	12.5	15.0	17,300	3.70	8.0	10,400	2.48
3675341	25HCC518A**30	CNPH*2417A**	58MVB040–14	17,400	12.5	15.0	17,300	3.72	8.0	10,400	2.50
3675346	25HCC518A**30	CNPH*2417A**	58PH*045–08	17,600	12.5	15.0	17,600	3.82	8.2	10,600	2.52
3675368	25HCC518A**30	CNPH*2417A**	58UVB060–14	17,400	12.5	15.0	17,300	3.72	8.0	10,400	2.50
3675369	25HCC518A**30	CNPH*2417A**	58UVB080–14	17,300	12.5	15.0	17,300	3.70	8.0	10,400	2.48
3675375	25HCC518A**30	CNPH*2417A**+TDR		17,400	11.2	13.5	18,000	3.64	7.8	11,200	2.40
3675657	25HCC518A**30	CNPV*1814A**	58CV(A,X)070–12	17,200	12.0	14.5	17,100	3.66	7.7	10,400	2.46
3675658	25HCC518A**30	CNPV*1814A**	58PH*045–08	17,400	12.0	14.5	17,400	3.72	7.9	10,500	2.48
3675659	25HCC518A**30	CNPV*1814A**+TDR		17,200	11.2	13.0	18,000	3.60	7.7	11,100	2.38
3675661	25HCC518A**30	CNPV*1917A**	58CV(A,X)090–16	17,600	12.5	15.0	17,400	3.78	8.1	10,400	2.52
3675663	25HCC518A**30	CNPV*1917A**	58ME(B,C)060–12	18,000	13.0	15.5	17,600	3.96	8.5	10,600	2.60
3675662	25HCC518A**30	CNPV*1917A**	58MEB040–12	18,000	13.0	15.5	17,600	4.06	8.6	10,700	2.64
3675660	25HCC518A**30	CNPV*1917A**	58MV(B,C)060–14	17,500	12.5	15.0	17,400	3.76	8.5	10,400	2.52
3675664	25HCC518A**30	CNPV*1917A**	58UVB060–14	17,500	12.5	15.0	17,400	3.76	8.5	10,400	2.52
3675665	25HCC518A**30	CNPV*1917A**+TDR		17,600	11.2	13.0	18,000	3.66	7.9	11,200	2.40
3675666	25HCC518A**30	CNPV*2414A**	58CV(A,X)070–12	17,400	12.5	15.0	17,300	3.70	7.9	10,400	2.48
3675667	25HCC518A**30	CNPV*2414A**	58PH*045–08	17,600	12.5	15.0	17,600	3.82	8.2	10,600	2.52
3675670	25HCC518A**30	CNPV*2414A**+TDR		17,400	11.2	13.5	18,000	3.64	7.8	11,200	2.40
3675673	25HCC518A**30	CNPV*2417A**	58CV(A,X)090–16	17,400	12.5	15.0	17,300	3.74	8.0	10,400	2.50
3675675	25HCC518A**30	CNPV*2417A**	58ME(B,C)060–12	17,600	12.5	15.0	17,500	3.84	8.2	10,500	2.54
3675674	25HCC518A**30	CNPV*2417A**	58MEB040–12	17,800	12.5	15.5	17,600	3.94	8.4	10,600	2.58
3675672	25HCC518A**30	CNPV*2417A**	58MV(B,C)060–14	17,400	12.5	15.0	17,300	3.72	8.0	10,400	2.50
3675681	25HCC518A**30	CNPV*2417A**	58UVB060–14	17,400	12.5	15.0	17,300	3.72	8.0	10,400	2.50
3675683	25HCC518A**30	CNPV*2417A**+TDR		17,400	11.2	13.5	18,000	3.64	7.8	11,200	2.40
3675914	25HCC518A**30	CSPH*2412A**	58CV(A,X)070–12	17,400	12.5	15.0	17,300	3.70	7.9	10,400	2.48
3675915	25HCC518A**30	CSPH*2412A**	58CV(A,X)090–16	17,400	12.5	15.0	17,300	3.72	8.0	10,500	2.50
3675919	25HCC518A**30	CSPH*2412A**	58HDV040––12	18,000	12.2	14.5	18,000	3.92	8.3	11,000	2.54
3675920	25HCC518A**30	CSPH*2412A**	58HDV060––12	18,000	12.2	14.5	18,000	3.92	8.4	10,900	2.54
3675918	25HCC518A**30	CSPH*2412A**	58ME(B,C)060–12	17,600	12.5	15.0	17,300	3.76	8.1	10,400	2.52
3675917	25HCC518A**30	CSPH*2412A**	58MEB040–12	17,800	12.5	15.5	17,600	3.88	8.3	10,600	2.56
3675912	25HCC518A**30	CSPH*2412A**	58MV(B,C)060–14	17,400	12.5	15.0	17,300	3.72	8.0	10,500	2.50
3675913	25HCC518A**30	CSPH*2412A**	58MV(B,C)080–14	17,500	12.5	15.0	17,300	3.70	8.0	10,400	2.48
3675911	25HCC518A**30	CSPH*2412A**	58MVB040–14	17,500	12.5	15.0	17,300	3.72	8.0	10,500	2.50
3675916	25HCC518A**30	CSPH*2412A**	58PH*045–08	17,600	12.5	15.0	17,600	3.80	8.1	10,600	2.52
3675938	25HCC518A**30	CSPH*2412A**	58UVB060–14	17,400	12.5	15.0	17,300	3.72	8.0	10,500	2.50
3675939	25HCC518A**30	CSPH*2412A**	58UVB080–14	17,500	12.5	15.0	17,300	3.70	8.0	10,400	2.48
3675945	25HCC518A**30	CSPH*2412A**+TDR		17,400	11.2	13.5	18,000	3.64	7.8	11,200	2.40
3676277	25HCC524A**30	†FX4DNF025		24,000	12.5	15.3	24,000	3.94	8.7	14,800	2.70
3676189	25HCC524A**30	FE4AN(B,F)003+UI		23,800	12.5	15.5	24,000	3.92	9.0	14,400	2.72
3676202	25HCC524A**30	FE4ANF002+UI		23,800	12.5	15.5	24,000	3.92	9.0	14,500	2.70
3676208	25HCC524A**30	FF1ENP024		23,400	11.0	13.0	24,000	3.64	8.1	15,300	2.52
3676210	25HCC524A**30	FF1ENP025		23,800	12.0	14.5	24,000	3.84	8.5	14,800	2.64
3676211	25HCC524A**30	FF1ENP030		23,400	11.0	13.5	24,000	3.64	8.2	15,200	2.52
3676213	25HCC524A**30	FF1ENP031		23,800	12.0	14.5	24,000	3.84	8.5	14,900	2.64
3676217	25HCC524A**30	FF1ENP037		23,800	12.0	15.0	24,000	3.92	8.7	14,900	2.68
3676220	25HCC524A**30	FV4BN(B,F)003		23,800	12.5	15.5	24,000	3.92	9.0	14,400	2.72
3676233	25HCC524A**30	FV4BNF002		23,800	12.5	15.5	24,000	3.92	9.0	14,500	2.70
3676236	25HCC524A**30	FV4CN(B,F)003		23,800	12.5	15.5	24,000	3.92	9.0	14,400	2.72
3676249	25HCC524A**30	FV4CNF002		23,800	12.5	15.5	24,000	3.92	9.0	14,500	2.70
3676262	25HCC524A**30	FX4CNF024		23,800	12.0	15.0	24,000	3.82	8.5	14,700	2.64
3676263	25HCC524A**30	FX4CNF030		23,800	12.5	15.5	24,000	3.94	8.7	14,700	2.70
3676265	25HCC524A**30	FX4DN(B,F)031		24,000	12.2	15.0	24,000	3.94	8.7	14,900	2.70
3676282	25HCC524A**30	FY4ANF024		23,400	11.0	13.5	24,000	3.62	8.1	15,200	2.52

See notes on pg. 26

COMBINATION RATINGS CONTINUED

AHRI Ref. No.	Model Number	Coil Model Number	Furnace Model Number	Cooling Capacity	EER	SEER	High Temp		HSPF	Low Temp	
							E Capacity	E COP		H Capacity	H COP
3676283	25HCC524A**30	FY4ANF030		23,800	11.5	13.5	24,000	3.72	8.3	15,200	2.56
3675128	25HCC524A**30	CAP**2414A**	58CV(A,X)070–12	23,400	12.5	15.0	24,000	3.76	8.3	14,200	2.60
3675129	25HCC524A**30	CAP**2414A**	58PH*045–08	23,400	12.2	15.0	24,000	3.82	8.5	14,600	2.64
3675131	25HCC524A**30	CAP**2414A**+TDR		23,400	11.2	13.5	24,000	3.70	8.3	15,300	2.54
3675137	25HCC524A**30	CAP**2417A**	58CV(A,X)090–16	23,400	12.5	15.5	24,000	3.80	8.4	14,400	2.66
3675139	25HCC524A**30	CAP**2417A**	58ME(B,C)060–12	23,400	12.5	15.5	24,000	3.98	8.8	14,600	2.72
3675140	25HCC524A**30	CAP**2417A**	58ME(B,C)080–12	23,400	12.5	15.5	24,000	3.94	8.7	14,600	2.70
3675138	25HCC524A**30	CAP**2417A**	58MEB040–12	23,400	12.5	15.5	24,000	3.96	8.7	14,600	2.72
3675136	25HCC524A**30	CAP**2417A**	58MV(B,C)060–14	23,400	12.5	15.5	24,000	3.88	8.6	14,600	2.68
3675142	25HCC524A**30	CAP**2417A**	58UVB060–14	23,400	12.5	15.5	24,000	3.88	8.6	14,600	2.68
3675144	25HCC524A**30	CAP**2417A**+TDR		23,400	11.2	13.5	24,000	3.70	8.3	15,300	2.54
3675145	25HCC524A**30	CAP**3014A**	58CV(A,X)070–12	23,400	12.5	15.0	24,000	3.78	8.4	14,500	2.64
3675146	25HCC524A**30	CAP**3014A**	58PH*045–08	23,400	12.5	15.0	24,000	3.86	8.6	14,700	2.68
3675148	25HCC524A**30	CAP**3014A**+TDR		23,400	11.2	13.5	24,000	3.72	8.3	15,300	2.56
3675151	25HCC524A**30	CAP**3017A**	58CV(A,X)090–16	23,400	12.5	15.5	24,000	3.84	8.5	14,400	2.68
3675153	25HCC524A**30	CAP**3017A**	58ME(B,C)060–12	23,400	12.5	15.5	24,000	4.02	9.0	14,700	2.76
3675154	25HCC524A**30	CAP**3017A**	58ME(B,C)080–12	23,400	12.5	15.5	24,000	3.98	9.0	14,600	2.74
3675152	25HCC524A**30	CAP**3017A**	58MEB040–12	23,400	12.5	15.5	24,000	4.02	9.0	14,700	2.76
3675150	25HCC524A**30	CAP**3017A**	58MV(B,C)060–14	23,400	12.5	15.5	24,000	3.92	9.0	14,600	2.72
3675162	25HCC524A**30	CAP**3017A**	58UVB060–14	23,400	12.5	15.5	24,000	3.92	9.0	14,600	2.72
3675164	25HCC524A**30	CAP**3017A**+TDR		23,400	11.2	13.5	24,000	3.72	8.3	15,300	2.56
3675189	25HCC524A**30	CAP**3619A**	58HDV040––12	24,000	12.5	15.0	24,000	3.92	8.7	14,800	2.68
3675190	25HCC524A**30	CAP**3619A**	58HDV060––12	24,000	12.5	15.0	24,000	3.98	8.8	14,900	2.72
3675336	25HCC524A**30	CNPF*2418A**+TDR		23,400	11.2	13.5	24,000	3.78	8.3	15,300	2.56
3675357	25HCC524A**30	CNPH*2417A**	58CV(A,X)070–12	23,400	12.5	15.0	24,000	3.82	8.3	14,500	2.64
3675358	25HCC524A**30	CNPH*2417A**	58CV(A,X)090–16	23,400	12.5	15.0	24,000	3.86	8.4	14,500	2.66
3675359	25HCC524A**30	CNPH*2417A**	58CV(A,X)110–20	23,400	12.5	15.0	24,000	3.86	8.5	14,500	2.64
3675360	25HCC524A**30	CNPH*2417A**	58CV(A,X)135–22	23,400	12.5	15.0	24,000	3.86	8.5	14,500	2.66
3675361	25HCC524A**30	CNPH*2417A**	58CV(A,X)155–22	23,400	12.5	15.0	24,000	3.86	8.5	14,500	2.66
3675366	25HCC524A**30	CNPH*2417A**	58HDV040––12	23,400	12.2	14.5	24,000	3.86	8.5	14,800	2.62
3675367	25HCC524A**30	CNPH*2417A**	58HDV060––12	23,400	12.2	14.5	24,000	3.90	8.5	14,800	2.64
3675364	25HCC524A**30	CNPH*2417A**	58ME(B,C)060–12	23,400	12.5	15.0	24,000	3.98	8.7	14,600	2.70
3675365	25HCC524A**30	CNPH*2417A**	58ME(B,C)080–12	23,400	12.5	15.0	24,000	3.94	8.7	14,600	2.68
3675363	25HCC524A**30	CNPH*2417A**	58MEB040–12	23,400	12.5	15.0	24,000	3.96	8.7	14,600	2.70
3675352	25HCC524A**30	CNPH*2417A**	58MV(B,C)060–14	23,400	12.5	15.0	24,000	3.94	8.6	14,600	2.68
3675353	25HCC524A**30	CNPH*2417A**	58MV(B,C)080–14	23,400	12.5	15.0	24,000	3.84	8.5	14,500	2.64
3675354	25HCC524A**30	CNPH*2417A**	58MV(B,C)080–20	23,200	12.5	15.0	24,000	3.78	8.3	14,100	2.58
3675355	25HCC524A**30	CNPH*2417A**	58MV(B,C)100–20	23,400	12.5	15.0	24,000	3.86	8.5	14,500	2.66
3675356	25HCC524A**30	CNPH*2417A**	58MV(B,C)120–20	23,400	12.5	15.0	24,000	3.90	8.6	14,500	2.68
3675351	25HCC524A**30	CNPH*2417A**	58MVB040–14	23,400	12.2	15.0	24,000	3.84	8.5	14,600	2.64
3675362	25HCC524A**30	CNPH*2417A**	58PH*045–08	23,400	12.0	15.0	24,000	3.86	8.5	14,600	2.64
3675370	25HCC524A**30	CNPH*2417A**	58UVB060–14	23,400	12.5	15.0	24,000	3.94	8.6	14,600	2.68
3675371	25HCC524A**30	CNPH*2417A**	58UVB080–14	23,400	12.5	15.0	24,000	3.84	8.5	14,500	2.64
3675372	25HCC524A**30	CNPH*2417A**	58UVB080–20	23,200	12.5	15.0	24,000	3.78	8.3	14,100	2.58
3675373	25HCC524A**30	CNPH*2417A**	58UVB100–20	23,400	12.5	15.0	24,000	3.86	8.5	14,500	2.66
3675374	25HCC524A**30	CNPH*2417A**	58UVB120–20	23,400	12.5	15.0	24,000	3.90	8.6	14,500	2.68
3675376	25HCC524A**30	CNPH*2417A**+TDR		23,400	11.2	13.5	24,000	3.78	8.3	15,300	2.56
3675383	25HCC524A**30	CNPH*3017A**	58CV(A,X)070–12	23,400	12.5	15.0	24,000	3.80	8.4	14,500	2.66
3675384	25HCC524A**30	CNPH*3017A**	58CV(A,X)090–16	23,400	12.5	15.5	24,000	3.84	8.5	14,400	2.68
3675385	25HCC524A**30	CNPH*3017A**	58CV(A,X)110–20	23,400	12.5	15.5	24,000	3.84	8.5	14,500	2.68
3675386	25HCC524A**30	CNPH*3017A**	58CV(A,X)135–22	23,400	12.5	15.5	24,000	3.84	8.5	14,500	2.68
3675387	25HCC524A**30	CNPH*3017A**	58CV(A,X)155–22	23,400	12.5	15.5	24,000	3.86	8.5	14,500	2.68
3675392	25HCC524A**30	CNPH*3017A**	58HDV040––12	23,600	12.2	14.5	24,000	3.88	8.5	14,800	2.68
3675393	25HCC524A**30	CNPH*3017A**	58HDV060––12	23,600	12.2	14.5	24,000	3.94	8.5	14,900	2.70
3675390	25HCC524A**30	CNPH*3017A**	58ME(B,C)060–12	23,400	12.5	15.5	24,000	4.02	9.0	14,700	2.76
3675391	25HCC524A**30	CNPH*3017A**	58ME(B,C)080–12	23,400	12.5	15.5	24,000	3.98	9.0	14,600	2.74
3675389	25HCC524A**30	CNPH*3017A**	58MEB040–12	23,400	12.5	15.5	24,000	4.02	9.0	14,700	2.76
3675378	25HCC524A**30	CNPH*3017A**	58MV(B,C)060–14	23,400	12.5	15.5	24,000	3.92	9.0	14,600	2.72
3675379	25HCC524A**30	CNPH*3017A**	58MV(B,C)080–14	23,400	12.5	15.5	24,000	3.82	8.5	14,400	2.66
3675380	25HCC524A**30	CNPH*3017A**	58MV(B,C)080–20	23,400	12.5	15.0	24,000	3.76	8.3	14,100	2.60
3675381	25HCC524A**30	CNPH*3017A**	58MV(B,C)100–20	23,400	12.5	15.5	24,000	3.84	8.5	14,400	2.68
3675382	25HCC524A**30	CNPH*3017A**	58MV(B,C)120–20	23,400	12.5	15.5	24,000	3.88	8.6	14,500	2.70
3675377	25HCC524A**30	CNPH*3017A**	58MVB040–14	23,400	12.5	15.0	24,000	3.82	8.5	14,500	2.66
3675388	25HCC524A**30	CNPH*3017A**	58PH*045–08	23,400	12.5	15.0	24,000	3.90	8.5	14,700	2.68
3675413	25HCC524A**30	CNPH*3017A**	58UVB060–14	23,400	12.5	15.5	24,000	3.92	9.0	14,600	2.72
3675414	25HCC524A**30	CNPH*3017A**	58UVB080–14	23,400	12.5	15.5	24,000	3.82	8.5	14,400	2.66
3675415	25HCC524A**30	CNPH*3017A**	58UVB080–20	23,400	12.5	15.0	24,000	3.76	8.3	14,100	2.60
3675416	25HCC524A**30	CNPH*3017A**	58UVB100–20	23,400	12.5	15.5	24,000	3.84	8.5	14,400	2.68
3675417	25HCC524A**30	CNPH*3017A**	58UVB120–20	23,400	12.5	15.5	24,000	3.88	8.6	14,500	2.70
3675423	25HCC524A**30	CNPH*3017A**+TDR		23,400	11.2	13.5	24,000	3.74	8.3	15,300	2.56
3675425	25HCC524A**30	CNPH*3117A**	58HDV040––12	24,000	12.5	15.0	24,000	4.06	8.8	14,900	2.74
3675426	25HCC524A**30	CNPH*3117A**	58HDV060––12	24,000	12.5	15.0	24,000	4.16	8.8	15,000	2.76
3675668	25HCC524A**30	CNPV*2414A**	58CV(A,X)070–12	23,400	12.5	15.0	24,000	3.82	8.3	14,500	2.64
3675669	25HCC524A**30	CNPV*2414A**	58PH*045–08	23,400	12.2	15.0	24,000	3.86	8.5	14,600	2.64
3675671	25HCC524A**30	CNPV*2414A**+TDR		23,400	11.2	13.5	24,000	3.78	8.3	15,300	2.56
3675677	25HCC524A**30	CNPV*2417A**	58CV(A,X)090–16	23,400	12.5	15.0	24,000	3.86	8.4	14,500	2.66
3675679	25HCC524A**30	CNPV*2417A**	58ME(B,C)060–12	23,400	12.5	15.0	24,000	3.98	8.7	14,600	2.70
3675680	25HCC524A**30	CNPV*2417A**	58ME(B,C)080–12	23,400	12.5	15.0	24,000	3.94	8.7	14,600	2.68
3675678	25HCC524A**30	CNPV*2417A**	58MEB040–12	23,400	12.5	15.0	24,000	3.96	8.7	14,600	2.70
3675676	25HCC524A**30	CNPV*2417A**	58MV(B,C)060–14	23,400	12.5	15.0	24,000	3.94	8.6	14,600	2.68
3675682	25HCC524A**30	CNPV*2417A**	58UVB060–14	23,400	12.5	15.0	24,000	3.94	8.6	14,600	2.68
3675684	25HCC524A**30	CNPV*2417A**+TDR		23,400	11.2	13.5	24,000	3.78	8.3	15,300	2.56
3675685	25HCC524A**30	CNPV*3014A**	58CV(A,X)070–12	23,400	12.5	15.0	24,000	3.80	8.4	14,500	2.66
3675686	25HCC524A**30	CNPV*3014A**	58PH*045–08	23,400	12.5	15.0	24,000	3.84	8.5	14,700	2.66
3675688	25HCC524A**30	CNPV*3014A**+TDR		23,400	11.2	13.5	24,000	3.74	8.3	15,300	2.56
3675691	25HCC524A**30	CNPV*3017A**	58CV(A,X)090–16	23,400	12.5	15.5	24,000	3.84	8.5	14,400	2.68
3675693	25HCC524A**30	CNPV*3017A**	58ME(B,C)060–12	23,400	12.5	15.5	24,000	4.02	9.0	14,700	2.76

See notes on pg. 26

COMBINATION RATINGS CONTINUED

AHRI Ref. No.	Model Number	Coil Model Number	Furnace Model Number	Cooling Capacity	EER	SEER	High Temp		HSPF	Low Temp	
							E Capacity	E COP		H Capacity	H COP
3675694	25HCC524A**30	CNPV*3017A**	58ME(B,C)080–12	23,400	12.5	15.5	24,000	3.98	9.0	14,600	2.74
3675692	25HCC524A**30	CNPV*3017A**	58MEB040–12	23,400	12.5	15.5	24,000	4.02	9.0	14,700	2.76
3675690	25HCC524A**30	CNPV*3017A**	58MV(B,C)060–14	23,400	12.5	15.5	24,000	3.92	9.0	14,600	2.72
3675702	25HCC524A**30	CNPV*3017A**	58UVB060–14	23,400	12.5	15.5	24,000	3.92	9.0	14,600	2.72
3675704	25HCC524A**30	CNPV*3017A**+TDR		23,400	11.2	13.5	24,000	3.74	8.3	15,300	2.56
3675708	25HCC524A**30	CNPV*3117A**	58CV(A,X)090–16	23,400	12.5	15.5	24,000	4.02	8.8	14,500	2.74
3675710	25HCC524A**30	CNPV*3117A**	58ME(B,C)060–12	23,400	13.0	15.5	24,000	4.24	9.0	14,800	2.82
3675711	25HCC524A**30	CNPV*3117A**	58ME(B,C)080–12	23,400	13.0	15.5	24,000	4.18	9.0	14,700	2.80
3675709	25HCC524A**30	CNPV*3117A**	58MEB040–12	23,400	13.0	15.5	24,000	4.22	9.0	14,800	2.82
3675707	25HCC524A**30	CNPV*3117A**	58MV(B,C)060–14	23,400	13.0	16.0	24,000	4.10	9.0	14,700	2.78
3675719	25HCC524A**30	CNPV*3117A**	58UVB060–14	23,400	13.0	16.0	24,000	4.10	9.0	14,700	2.78
3675706	25HCC524A**30	CNPV*3117A**		23,400	11.5	14.0	24,000	3.90	8.6	15,400	2.62
3675927	25HCC524A**30	CSPH*2412A**	58CV(A,X)070–12	23,400	12.5	15.0	24,000	3.82	8.4	14,500	2.64
3675928	25HCC524A**30	CSPH*2412A**	58CV(A,X)090–16	23,400	12.5	15.5	24,000	3.86	8.4	14,500	2.66
3675929	25HCC524A**30	CSPH*2412A**	58CV(A,X)110–20	23,400	12.5	15.0	24,000	3.84	8.5	14,600	2.66
3675930	25HCC524A**30	CSPH*2412A**	58CV(A,X)135–22	23,400	12.5	15.0	24,000	3.84	8.5	14,600	2.66
3675931	25HCC524A**30	CSPH*2412A**	58CV(A,X)155–22	23,400	12.5	15.0	24,000	3.86	8.5	14,600	2.66
3675936	25HCC524A**30	CSPH*2412A**	58HDV040––12	23,400	12.2	14.5	24,000	3.84	8.5	14,800	2.64
3675937	25HCC524A**30	CSPH*2412A**	58HDV060––12	23,400	12.2	14.5	24,000	3.88	8.5	14,900	2.66
3675934	25HCC524A**30	CSPH*2412A**	58ME(B,C)060–12	23,400	12.5	15.5	24,000	3.96	8.7	14,700	2.70
3675935	25HCC524A**30	CSPH*2412A**	58ME(B,C)080–12	23,400	12.5	15.5	24,000	3.92	8.6	14,600	2.70
3675933	25HCC524A**30	CSPH*2412A**	58MEB040–12	23,400	12.5	15.5	24,000	3.94	8.7	14,600	2.70
3675922	25HCC524A**30	CSPH*2412A**	58MV(B,C)060–14	23,400	12.5	15.0	24,000	3.94	8.6	14,700	2.70
3675923	25HCC524A**30	CSPH*2412A**	58MV(B,C)080–14	23,400	12.5	15.0	24,000	3.82	8.5	14,500	2.64
3675924	25HCC524A**30	CSPH*2412A**	58MV(B,C)080–20	23,400	12.5	15.0	24,000	3.76	8.3	14,200	2.60
3675925	25HCC524A**30	CSPH*2412A**	58MV(B,C)100–20	23,400	12.5	15.0	24,000	3.84	8.5	14,500	2.66
3675926	25HCC524A**30	CSPH*2412A**	58MV(B,C)120–20	23,400	12.5	15.0	24,000	3.90	8.6	14,600	2.68
3675921	25HCC524A**30	CSPH*2412A**	58MVB040–14	23,400	12.5	15.0	24,000	3.84	8.5	14,600	2.66
3675932	25HCC524A**30	CSPH*2412A**	58PH*045–08	23,400	12.2	15.0	24,000	3.84	8.5	14,600	2.66
3675940	25HCC524A**30	CSPH*2412A**	58UVB060–14	23,400	12.5	15.0	24,000	3.94	8.6	14,700	2.70
3675941	25HCC524A**30	CSPH*2412A**	58UVB080–14	23,400	12.5	15.0	24,000	3.82	8.5	14,500	2.64
3675942	25HCC524A**30	CSPH*2412A**	58UVB080–20	23,400	12.5	15.0	24,000	3.76	8.3	14,200	2.60
3675943	25HCC524A**30	CSPH*2412A**	58UVB100–20	23,400	12.5	15.0	24,000	3.84	8.5	14,500	2.66
3675944	25HCC524A**30	CSPH*2412A**	58UVB120–20	23,400	12.5	15.0	24,000	3.90	8.6	14,600	2.68
3675946	25HCC524A**30	CSPH*2412A**+TDR		23,400	11.2	13.5	24,000	3.78	8.3	15,300	2.58
3675953	25HCC524A**30	CSPH*3012A**	58CV(A,X)070–12	23,400	12.5	15.0	24,000	3.80	8.4	14,500	2.66
3675954	25HCC524A**30	CSPH*3012A**	58CV(A,X)090–16	23,400	12.5	15.5	24,000	3.84	8.5	14,500	2.68
3675955	25HCC524A**30	CSPH*3012A**	58CV(A,X)110–20	23,400	12.5	15.5	24,000	3.84	8.5	14,500	2.66
3675956	25HCC524A**30	CSPH*3012A**	58CV(A,X)135–22	23,400	12.5	15.5	24,000	3.84	8.5	14,500	2.68
3675957	25HCC524A**30	CSPH*3012A**	58CV(A,X)155–22	23,400	12.5	15.5	24,000	3.84	8.5	14,500	2.68
3675962	25HCC524A**30	CSPH*3012A**	58HDV040––12	23,600	12.2	14.5	24,000	3.86	8.5	14,800	2.66
3675963	25HCC524A**30	CSPH*3012A**	58HDV060––12	23,600	12.2	14.5	24,000	3.92	8.5	14,900	2.68
3675960	25HCC524A**30	CSPH*3012A**	58ME(B,C)060–12	23,400	12.5	15.5	24,000	4.00	9.0	14,700	2.74
3675961	25HCC524A**30	CSPH*3012A**	58ME(B,C)080–12	23,400	12.5	15.5	24,000	3.96	9.0	14,600	2.72
3675959	25HCC524A**30	CSPH*3012A**	58MEB040–12	23,400	12.5	15.5	24,000	3.98	9.0	14,700	2.74
3675948	25HCC524A**30	CSPH*3012A**	58MV(B,C)060–14	23,400	12.5	15.5	24,000	3.92	9.0	14,600	2.70
3675949	25HCC524A**30	CSPH*3012A**	58MV(B,C)080–14	23,400	12.5	15.5	24,000	3.80	8.4	14,500	2.66
3675950	25HCC524A**30	CSPH*3012A**	58MV(B,C)080–20	23,400	12.5	15.0	24,000	3.74	8.3	14,100	2.60
3675951	25HCC524A**30	CSPH*3012A**	58MV(B,C)100–20	23,400	12.5	15.5	24,000	3.82	8.5	14,500	2.66
3675952	25HCC524A**30	CSPH*3012A**	58MV(B,C)120–20	23,400	12.5	15.5	24,000	3.88	8.6	14,500	2.70
3675947	25HCC524A**30	CSPH*3012A**	58MVB040–14	23,400	12.5	15.0	24,000	3.82	8.5	14,500	2.66
3675958	25HCC524A**30	CSPH*3012A**	58PH*045–08	23,400	12.5	15.0	24,000	3.88	8.5	14,700	2.68
3675983	25HCC524A**30	CSPH*3012A**	58UVB060–14	23,400	12.5	15.5	24,000	3.92	9.0	14,600	2.70
3675984	25HCC524A**30	CSPH*3012A**	58UVB080–14	23,400	12.5	15.5	24,000	3.80	8.4	14,500	2.66
3675985	25HCC524A**30	CSPH*3012A**	58UVB080–20	23,400	12.5	15.0	24,000	3.74	8.3	14,100	2.60
3675986	25HCC524A**30	CSPH*3012A**	58UVB100–20	23,400	12.5	15.5	24,000	3.82	8.5	14,500	2.66
3675987	25HCC524A**30	CSPH*3012A**	58UVB120–20	23,400	12.5	15.5	24,000	3.88	8.6	14,500	2.70
3675993	25HCC524A**30	CSPH*3012A**+TDR		23,400	11.2	13.5	24,000	3.76	8.3	15,300	2.58
3676266	25HCC530A**30	†FX4DN(B,F)031		28,400	12.5	15.3	28,400	3.98	8.7	17,000	2.66
3676190	25HCC530A**30	FE4AN(B,F)003+UI		28,200	12.5	15.5	28,000	3.92	8.3	16,600	2.66
3676193	25HCC530A**30	FE4AN(B,F)005+UI		28,800	13.0	15.5	28,000	4.14	8.7	16,700	2.74
3676203	25HCC530A**30	FE4ANF002+UI		28,000	12.5	15.0	28,200	3.90	8.3	16,700	2.62
3676212	25HCC530A**30	FF1ENP030		27,400	11.2	13.0	29,000	3.68	7.9	17,400	2.48
3676214	25HCC530A**30	FF1ENP031		28,000	12.0	14.5	28,600	3.86	8.2	17,000	2.60
3676215	25HCC530A**30	FF1ENP036		28,000	11.2	13.5	29,000	3.72	8.0	17,500	2.50
3676218	25HCC530A**30	FF1ENP037		28,200	12.0	14.0	28,800	3.86	8.2	17,200	2.58
3676221	25HCC530A**30	FV4BN(B,F)003		28,200	12.5	15.5	28,000	3.92	8.3	16,600	2.66
3676224	25HCC530A**30	FV4BN(B,F)005		28,800	13.0	15.5	28,000	4.14	8.7	16,700	2.74
3676234	25HCC530A**30	FV4BNF002		28,000	12.5	15.0	28,200	3.90	8.3	16,700	2.62
3676237	25HCC530A**30	FV4CN(B,F)003		28,200	12.5	15.5	28,000	3.92	8.3	16,600	2.64
3676240	25HCC530A**30	FV4CN(B,F)005		28,800	13.0	15.5	28,000	4.14	8.7	16,700	2.74
3676250	25HCC530A**30	FV4CNF002		28,000	12.5	15.0	28,200	3.90	8.3	16,700	2.62
3676252	25HCC530A**30	FX4CN(B,F)036		28,200	12.0	14.0	28,800	3.88	8.3	17,200	2.58
3676264	25HCC530A**30	FX4CNF030		28,000	12.0	14.5	28,600	3.90	8.3	17,000	2.60
3676267	25HCC530A**30	FX4DN(B,F)037		29,000	12.5	15.0	28,800	4.12	8.7	17,100	2.70
3676284	25HCC530A**30	FY4ANF030		27,600	11.2	13.0	29,000	3.72	8.0	17,500	2.48
3676285	25HCC530A**30	FY4ANF036		27,800	11.2	13.0	29,200	3.70	8.0	17,700	2.48
3675147	25HCC530A**30	CAP**3014A**	58CV(A,X)070–12	27,600	12.0	14.5	28,200	3.78	8.1	16,700	2.58
3675149	25HCC530A**30	CAP**3014A**+TDR		27,800	11.2	13.0	29,200	3.72	8.0	17,600	2.50
3675156	25HCC530A**30	CAP**3017A**	58CV(A,X)090–16	27,800	12.5	15.0	28,000	3.82	8.2	16,600	2.60
3675159	25HCC530A**30	CAP**3017A**	58ME(B,C)060–12	28,000	12.5	15.0	28,400	3.92	8.3	16,800	2.64
3675160	25HCC530A**30	CAP**3017A**	58ME(B,C)080–12	28,000	12.5	15.0	28,200	3.90	8.3	16,800	2.64
3675161	25HCC530A**30	CAP**3017A**	58ME(B,C)080–16	28,000	12.5	15.0	28,400	3.94	8.4	17,000	2.64
3675158	25HCC530A**30	CAP**3017A**	58MEB040–12	28,000	12.5	15.0	28,200	3.92	8.3	16,800	2.64
3675155	25HCC530A**30	CAP**3017A**	58MV(B,C)060–14	27,800	12.5	15.0	28,200	3.86	8.2	16,700	2.62
3675157	25HCC530A**30	CAP**3017A**	58PH*070–16	27,800	12.0	14.5	28,400	3.82	8.2	16,900	2.60

See notes on pg. 26

COMBINATION RATINGS CONTINUED

AHRI Ref. No.	Model Number	Coil Model Number	Furnace Model Number	Cooling Capacity	EER	SEER	High Temp		HSPF	Low Temp	
							E Capacity	E COP		H Capacity	H COP
3675163	25HCC530A**30	CAP**3017A**	58UVB060−14	27,800	12.5	15.0	28,200	3.86	8.2	16,700	2.62
3675165	25HCC530A**30	CAP**3017A**+TDR		27,800	11.2	13.0	29,200	3.72	8.0	17,600	2.50
3675166	25HCC530A**30	CAP**3614A**	58CV(A,X)070−12	27,800	12.0	14.5	28,200	3.80	8.1	16,700	2.58
3675169	25HCC530A**30	CAP**3614A**+TDR		27,800	11.2	13.0	29,200	3.74	8.0	17,600	2.50
3675172	25HCC530A**30	CAP**3617A**	58CV(A,X)090−16	27,800	12.5	15.0	28,000	3.86	8.2	16,600	2.62
3675175	25HCC530A**30	CAP**3617A**	58ME(B,C)060−12	28,000	12.5	15.0	28,400	3.96	8.5	16,900	2.66
3675176	25HCC530A**30	CAP**3617A**	58ME(B,C)080−12	28,000	12.5	15.0	28,400	3.94	8.5	16,800	2.64
3675177	25HCC530A**30	CAP**3617A**	58ME(B,C)080−16	28,000	12.5	15.0	28,600	3.96	8.5	17,000	2.66
3675174	25HCC530A**30	CAP**3617A**	58MEB040−12	28,000	12.5	15.0	28,400	3.96	8.5	16,800	2.66
3675171	25HCC530A**30	CAP**3617A**	58MV(B,C)060−14	27,800	12.5	15.0	28,200	3.88	8.5	16,700	2.62
3675173	25HCC530A**30	CAP**3617A**	58PH*070−16	28,000	12.0	14.5	28,400	3.86	8.2	16,900	2.60
3675185	25HCC530A**30	CAP**3617A**	58UVB060−14	27,800	12.5	15.0	28,200	3.88	8.5	16,700	2.62
3675187	25HCC530A**30	CAP**3617A**+TDR		27,800	11.2	13.0	29,200	3.74	8.0	17,600	2.50
3675191	25HCC530A**30	CAP**3619A**	58HDV040−−12	27,800	12.0	14.0	28,600	3.80	8.1	17,100	2.56
3675192	25HCC530A**30	CAP**3619A**	58HDV060−−12	27,800	12.0	14.5	28,600	3.86	8.2	17,100	2.60
3675195	25HCC530A**30	CAP**3619A**+TDR		27,800	11.2	13.0	29,200	3.74	8.0	17,600	2.50
3675200	25HCC530A**30	CAP**3621A**	58CV(A,X)110−20	27,800	12.5	15.0	28,000	3.88	8.3	16,600	2.64
3675197	25HCC530A**30	CAP**3621A**	58MV(B,C)080−14	27,800	12.5	15.0	28,000	3.82	8.1	16,600	2.60
3675198	25HCC530A**30	CAP**3621A**	58MV(B,C)080−20	27,800	12.5	15.0	28,000	3.84	8.2	16,600	2.62
3675199	25HCC530A**30	CAP**3621A**	58MV(B,C)100−20	27,600	12.5	15.0	28,000	3.80	8.1	16,500	2.60
3675201	25HCC530A**30	CAP**3621A**	58PH*090−16	28,000	12.5	15.0	28,400	3.94	8.4	16,900	2.66
3675209	25HCC530A**30	CAP**3621A**	58UVB080−14	27,800	12.5	15.0	28,000	3.82	8.1	16,600	2.60
3675210	25HCC530A**30	CAP**3621A**	58UVB080−20	27,800	12.5	15.0	28,000	3.84	8.2	16,600	2.62
3675211	25HCC530A**30	CAP**3621A**	58UVB100−20	27,600	12.5	15.0	28,000	3.80	8.1	16,500	2.60
3675215	25HCC530A**30	CAP**3621A**+TDR		27,800	11.2	13.0	29,200	3.74	8.0	17,600	2.50
3675337	25HCC530A**30	CNPF*3618A**+TDR		27,800	11.2	13.0	29,200	3.72	8.0	17,600	2.50
3675400	25HCC530A**30	CNPH*3017A**	58CV(A,X)070−12	27,800	12.0	14.5	28,200	3.80	8.1	16,700	2.58
3675401	25HCC530A**30	CNPH*3017A**	58CV(A,X)090−16	27,800	12.5	15.0	28,000	3.84	8.2	16,600	2.60
3675402	25HCC530A**30	CNPH*3017A**	58CV(A,X)110−20	27,800	12.5	15.0	28,200	3.84	8.2	16,700	2.62
3675403	25HCC530A**30	CNPH*3017A**	58CV(A,X)135−22	27,800	12.5	15.0	28,000	3.84	8.2	16,600	2.62
3675404	25HCC530A**30	CNPH*3017A**	58CV(A,X)155−22	27,800	12.5	15.0	28,000	3.86	8.2	16,600	2.62
3675411	25HCC530A**30	CNPH*3017A**	58HDV040−−12	27,800	11.5	14.0	28,600	3.76	8.1	17,000	2.54
3675412	25HCC530A**30	CNPH*3017A**	58HDV060−−12	28,000	12.0	14.5	28,600	3.82	8.2	17,100	2.58
3675408	25HCC530A**30	CNPH*3017A**	58ME(B,C)060−12	28,000	12.5	15.0	28,400	3.92	8.3	16,800	2.64
3675409	25HCC530A**30	CNPH*3017A**	58ME(B,C)080−12	28,000	12.5	15.0	28,200	3.90	8.3	16,800	2.64
3675410	25HCC530A**30	CNPH*3017A**	58ME(B,C)080−16	28,000	12.2	15.0	28,400	3.92	8.4	17,000	2.64
3675407	25HCC530A**30	CNPH*3017A**	58MEB040−12	28,000	12.5	15.0	28,200	3.90	8.3	16,800	2.64
3675395	25HCC530A**30	CNPH*3017A**	58MV(B,C)060−14	27,800	12.5	15.0	28,200	3.86	8.2	16,700	2.62
3675396	25HCC530A**30	CNPH*3017A**	58MV(B,C)080−14	27,600	12.0	14.5	28,000	3.78	8.1	16,600	2.58
3675397	25HCC530A**30	CNPH*3017A**	58MV(B,C)080−20	27,800	12.0	14.5	28,200	3.82	8.1	16,700	2.60
3675398	25HCC530A**30	CNPH*3017A**	58MV(B,C)100−20	27,600	12.0	14.5	28,000	3.76	8.0	16,600	2.58
3675399	25HCC530A**30	CNPH*3017A**	58MV(B,C)120−20	27,800	12.5	15.0	28,000	3.84	8.2	16,600	2.62
3675394	25HCC530A**30	CNPH*3017A**	58MVB040−14	27,600	12.0	14.5	28,200	3.80	8.1	16,700	2.58
3675405	25HCC530A**30	CNPH*3017A**	58PH*070−16	27,800	12.0	14.5	28,400	3.82	8.2	16,900	2.58
3675406	25HCC530A**30	CNPH*3017A**	58PH*090−16	27,800	12.0	14.5	28,400	3.86	8.2	16,800	2.62
3675418	25HCC530A**30	CNPH*3017A**	58UVB060−14	27,800	12.5	15.0	28,200	3.86	8.2	16,700	2.62
3675419	25HCC530A**30	CNPH*3017A**	58UVB080−14	27,600	12.0	14.5	28,000	3.78	8.1	16,600	2.58
3675420	25HCC530A**30	CNPH*3017A**	58UVB080−20	27,800	12.0	14.5	28,200	3.82	8.1	16,700	2.60
3675421	25HCC530A**30	CNPH*3017A**	58UVB100−20	27,600	12.0	14.5	28,000	3.76	8.0	16,600	2.58
3675422	25HCC530A**30	CNPH*3017A**	58UVB120−20	27,800	12.5	15.0	28,000	3.84	8.2	16,600	2.62
3675424	25HCC530A**30	CNPH*3017A**+TDR		27,800	11.2	13.0	29,200	3.72	8.0	17,600	2.50
3675427	25HCC530A**30	CNPH*3117A**	58HDV040−−12	28,400	12.2	14.5	28,800	3.94	8.4	17,200	2.62
3675428	25HCC530A**30	CNPH*3117A**	58HDV060−−12	28,600	12.2	14.5	29,000	4.00	8.5	17,200	2.64
3675435	25HCC530A**30	CNPH*3617A**	58CV(A,X)070−12	27,800	12.0	14.5	28,200	3.80	8.1	16,700	2.58
3675436	25HCC530A**30	CNPH*3617A**	58CV(A,X)090−16	27,800	12.5	15.0	28,000	3.84	8.2	16,600	2.60
3675437	25HCC530A**30	CNPH*3617A**	58CV(A,X)110−20	27,800	12.5	15.0	28,000	3.84	8.2	16,700	2.62
3675438	25HCC530A**30	CNPH*3617A**	58CV(A,X)135−22	27,800	12.5	15.0	28,000	3.84	8.2	16,600	2.62
3675439	25HCC530A**30	CNPH*3617A**	58CV(A,X)155−22	27,800	12.5	15.0	28,000	3.86	8.2	16,600	2.62
3675446	25HCC530A**30	CNPH*3617A**	58HDV040−−12	27,800	11.5	14.0	28,600	3.76	8.1	17,000	2.54
3675447	25HCC530A**30	CNPH*3617A**	58HDV060−−12	28,000	12.0	14.5	28,600	3.82	8.2	17,100	2.58
3675443	25HCC530A**30	CNPH*3617A**	58ME(B,C)060−12	28,000	12.5	15.0	28,400	3.92	8.5	16,800	2.64
3675444	25HCC530A**30	CNPH*3617A**	58ME(B,C)080−12	28,000	12.5	15.0	28,200	3.90	8.5	16,800	2.64
3675445	25HCC530A**30	CNPH*3617A**	58ME(B,C)080−16	28,000	12.2	15.0	28,600	3.92	8.5	17,000	2.64
3675442	25HCC530A**30	CNPH*3617A**	58MEB040−12	28,000	12.5	15.0	28,200	3.90	8.5	16,800	2.64
3675430	25HCC530A**30	CNPH*3617A**	58MV(B,C)060−14	27,800	12.5	15.0	28,200	3.86	8.5	16,700	2.62
3675431	25HCC530A**30	CNPH*3617A**	58MV(B,C)080−14	27,600	12.0	14.5	28,000	3.78	8.1	16,600	2.58
3675432	25HCC530A**30	CNPH*3617A**	58MV(B,C)080−20	27,800	12.0	14.5	28,000	3.82	8.1	16,700	2.60
3675433	25HCC530A**30	CNPH*3617A**	58MV(B,C)100−20	27,600	12.0	14.5	28,000	3.76	8.0	16,600	2.58
3675434	25HCC530A**30	CNPH*3617A**	58MV(B,C)120−20	27,800	12.5	15.0	28,000	3.84	8.2	16,600	2.62
3675429	25HCC530A**30	CNPH*3617A**	58MVB040−14	27,600	12.0	14.5	28,200	3.80	8.1	16,700	2.58
3675440	25HCC530A**30	CNPH*3617A**	58PH*070−16	27,800	12.0	14.5	28,400	3.82	8.2	16,900	2.58
3675441	25HCC530A**30	CNPH*3617A**	58PH*090−16	28,000	12.0	14.5	28,400	3.86	8.2	16,800	2.62
3675472	25HCC530A**30	CNPH*3617A**	58UVB060−14	27,800	12.5	15.0	28,200	3.86	8.5	16,700	2.62
3675473	25HCC530A**30	CNPH*3617A**	58UVB080−14	27,600	12.0	14.5	28,000	3.78	8.1	16,600	2.58
3675474	25HCC530A**30	CNPH*3617A**	58UVB080−20	27,800	12.0	14.5	28,000	3.82	8.1	16,700	2.60
3675475	25HCC530A**30	CNPH*3617A**	58UVB100−20	27,600	12.0	14.5	28,000	3.76	8.0	16,600	2.58
3675476	25HCC530A**30	CNPH*3617A**	58UVB120−20	27,800	12.5	15.0	28,000	3.84	8.2	16,600	2.62
3675482	25HCC530A**30	CNPH*3617A**+TDR		27,800	11.2	13.0	29,200	3.72	8.0	17,600	2.50
3675687	25HCC530A**30	CNPV*3014A**	58CV(A,X)070−12	27,600	12.0	14.5	28,200	3.78	8.1	16,800	2.58
3675689	25HCC530A**30	CNPV*3014A**+TDR		27,800	11.2	13.0	29,200	3.72	8.0	17,600	2.50
3675696	25HCC530A**30	CNPV*3017A**	58CV(A,X)090−16	27,800	12.5	15.0	28,000	3.84	8.2	16,600	2.60
3675699	25HCC530A**30	CNPV*3017A**	58ME(B,C)060−12	28,000	12.5	15.0	28,400	3.92	8.3	16,800	2.64
3675700	25HCC530A**30	CNPV*3017A**	58ME(B,C)080−12	28,000	12.5	15.0	28,200	3.90	8.3	16,800	2.64
3675701	25HCC530A**30	CNPV*3017A**	58ME(B,C)080−16	28,000	12.2	15.0	28,400	3.92	8.4	17,000	2.64
3675698	25HCC530A**30	CNPV*3017A**	58MEB040−12	28,000	12.5	15.0	28,200	3.90	8.3	16,800	2.64
3675695	25HCC530A**30	CNPV*3017A**	58MV(B,C)060−14	27,800	12.5	15.0	28,200	3.86	8.2	16,700	2.62
3675697	25HCC530A**30	CNPV*3017A**	58PH*070−16	27,800	12.0	14.5	28,400	3.82	8.2	16,900	2.58

See notes on pg. 26

COMBINATION RATINGS CONTINUED

AHRI Ref. No.	Model Number	Coil Model Number	Furnace Model Number	Cooling Capacity	EER	SEER	High Temp		HSPF	Low Temp	
							E Capacity	E COP		H Capacity	H COP
3675703	25HCC530A**30	CNPV*3017A**	58UVB060−14	27,800	12.5	15.0	28,200	3.86	8.2	16,700	2.62
3675705	25HCC530A**30	CNPV*3017A**+TDR		27,800	11.2	13.0	29,200	3.72	8.0	17,600	2.50
3675713	25HCC530A**30	CNPV*3117A**	58CV(A,X)090−16	28,400	12.5	15.5	28,400	4.00	8.5	16,700	2.68
3675716	25HCC530A**30	CNPV*3117A**	58ME(B,C)060−12	28,800	12.5	15.0	28,800	4.12	8.7	17,000	2.70
3675717	25HCC530A**30	CNPV*3117A**	58ME(B,C)080−12	28,800	12.5	15.5	28,600	4.08	8.6	16,900	2.70
3675718	25HCC530A**30	CNPV*3117A**	58ME(B,C)080−16	29,000	12.5	15.0	28,800	4.14	8.7	17,100	2.70
3675715	25HCC530A**30	CNPV*3117A**	58MEB040−12	28,800	12.5	15.5	28,600	4.12	8.7	16,900	2.72
3675712	25HCC530A**30	CNPV*3117A**	58MV(B,C)060−14	28,600	12.5	15.0	28,400	4.04	8.5	16,800	2.68
3675714	25HCC530A**30	CNPV*3117A**	58PH*070−16	28,600	12.5	15.0	28,800	4.00	8.5	17,100	2.66
3675720	25HCC530A**30	CNPV*3117A**	58UVB060−14	28,600	12.5	15.0	28,400	4.04	8.5	16,800	2.68
3675721	25HCC530A**30	CNPV*3117A**+TDR		28,600	11.5	13.5	29,400	3.90	8.3	17,800	2.56
3675723	25HCC530A**30	CNPV*3617A**	58CV(A,X)090−16	27,800	12.5	15.0	28,000	3.84	8.2	16,600	2.60
3675726	25HCC530A**30	CNPV*3617A**	58ME(B,C)060−12	28,000	12.5	15.0	28,400	3.92	8.5	16,800	2.64
3675727	25HCC530A**30	CNPV*3617A**	58ME(B,C)080−12	28,000	12.5	15.0	28,200	3.90	8.5	16,800	2.64
3675728	25HCC530A**30	CNPV*3617A**	58ME(B,C)080−16	28,000	12.2	15.0	28,600	3.92	8.5	17,000	2.64
3675725	25HCC530A**30	CNPV*3617A**	58MEB040−12	28,000	12.5	15.0	28,200	3.90	8.5	16,800	2.64
3675722	25HCC530A**30	CNPV*3617A**	58MV(B,C)060−14	27,800	12.5	15.0	28,200	3.86	8.5	16,700	2.62
3675724	25HCC530A**30	CNPV*3617A**	58PH*070−16	27,800	12.0	14.5	28,400	3.82	8.2	16,900	2.58
3675736	25HCC530A**30	CNPV*3617A**	58UVB060−14	27,800	12.5	15.0	28,200	3.86	8.5	16,700	2.62
3675738	25HCC530A**30	CNPV*3617A**+TDR		27,800	11.2	13.0	29,200	3.72	8.0	17,600	2.50
3675743	25HCC530A**30	CNPV*3621A**	58CV(A,X)110−20	27,800	12.5	15.0	28,000	3.84	8.2	16,700	2.62
3675740	25HCC530A**30	CNPV*3621A**	58MV(B,C)080−14	27,600	12.0	14.5	28,000	3.78	8.1	16,600	2.58
3675741	25HCC530A**30	CNPV*3621A**	58MV(B,C)080−20	27,800	12.2	15.0	28,000	3.82	8.1	16,700	2.60
3675742	25HCC530A**30	CNPV*3621A**	58MV(B,C)100−20	27,600	12.0	14.5	28,000	3.76	8.0	16,600	2.58
3675744	25HCC530A**30	CNPV*3621A**	58PH*090−16	28,000	12.0	14.5	28,400	3.86	8.2	16,800	2.62
3675752	25HCC530A**30	CNPV*3621A**	58UVB080−14	27,600	12.0	14.5	28,000	3.78	8.1	16,600	2.58
3675753	25HCC530A**30	CNPV*3621A**	58UVB080−20	27,800	12.2	15.0	28,000	3.82	8.1	16,700	2.60
3675754	25HCC530A**30	CNPV*3621A**	58UVB100−20	27,600	12.0	14.5	28,000	3.76	8.0	16,600	2.58
3675758	25HCC530A**30	CNPV*3621A**+TDR		27,800	11.2	13.0	29,200	3.72	8.0	17,600	2.50
3675761	25HCC530A**30	CNPV*3717A**	58CV(A,X)090−16	28,800	12.5	15.5	28,400	4.12	8.6	16,800	2.70
3675764	25HCC530A**30	CNPV*3717A**	58ME(B,C)060−12	28,800	12.5	15.5	28,600	4.24	8.9	17,100	2.74
3675765	25HCC530A**30	CNPV*3717A**	58ME(B,C)080−12	29,200	12.5	15.5	28,600	4.20	8.8	17,000	2.74
3675766	25HCC530A**30	CNPV*3717A**	58ME(B,C)080−16	29,400	12.5	15.5	28,800	4.24	8.9	17,200	2.74
3675763	25HCC530A**30	CNPV*3717A**	58MEB040−12	28,800	13.0	15.5	28,600	4.22	8.9	17,000	2.74
3675760	25HCC530A**30	CNPV*3717A**	58MV(B,C)060−14	28,800	12.5	15.5	28,600	4.16	8.7	16,900	2.72
3675762	25HCC530A**30	CNPV*3717A**	58PH*070−16	29,000	12.5	15.0	28,800	4.12	8.7	17,200	2.68
3675774	25HCC530A**30	CNPV*3717A**	58UVB060−14	28,800	12.5	15.5	28,600	4.16	8.7	16,900	2.72
3675776	25HCC530A**30	CNPV*3717A**+TDR		28,800	11.5	13.5	29,400	3.96	8.4	17,900	2.58
3675970	25HCC530A**30	CSPH*3012A**	58CV(A,X)070−12	27,800	12.0	14.5	28,200	3.82	8.1	16,800	2.58
3675971	25HCC530A**30	CSPH*3012A**	58CV(A,X)090−16	27,800	12.5	15.0	28,200	3.84	8.2	16,700	2.60
3675972	25HCC530A**30	CSPH*3012A**	58CV(A,X)110−20	27,800	12.5	15.0	28,200	3.84	8.2	16,700	2.60
3675973	25HCC530A**30	CSPH*3012A**	58CV(A,X)135−22	27,800	12.5	15.0	28,000	3.86	8.2	16,700	2.62
3675974	25HCC530A**30	CSPH*3012A**	58CV(A,X)155−22	27,800	12.5	15.0	28,200	3.86	8.2	16,700	2.62
3675981	25HCC530A**30	CSPH*3012A**	58HDV040−−12	27,800	11.5	14.0	28,600	3.76	8.1	17,000	2.54
3675982	25HCC530A**30	CSPH*3012A**	58HDV060−−12	28,000	12.0	14.5	28,600	3.80	8.1	17,100	2.56
3675978	25HCC530A**30	CSPH*3012A**	58ME(B,C)060−12	28,000	12.5	15.0	28,400	3.90	8.3	16,900	2.64
3675979	25HCC530A**30	CSPH*3012A**	58ME(B,C)080−12	28,000	12.5	15.0	28,200	3.88	8.3	16,800	2.62
3675980	25HCC530A**30	CSPH*3012A**	58ME(B,C)080−16	28,000	12.0	14.5	28,400	3.92	8.3	17,000	2.64
3675977	25HCC530A**30	CSPH*3012A**	58MEB040−12	28,000	12.5	15.0	28,200	3.90	8.3	16,800	2.64
3675965	25HCC530A**30	CSPH*3012A**	58MV(B,C)060−14	27,800	12.5	15.0	28,200	3.88	8.2	16,800	2.62
3675966	25HCC530A**30	CSPH*3012A**	58MV(B,C)080−14	27,600	12.0	14.5	28,200	3.78	8.1	16,700	2.58
3675967	25HCC530A**30	CSPH*3012A**	58MV(B,C)080−20	27,800	12.0	14.5	28,200	3.82	8.1	16,700	2.60
3675968	25HCC530A**30	CSPH*3012A**	58MV(B,C)100−20	27,600	12.0	14.5	28,000	3.76	8.0	16,600	2.58
3675969	25HCC530A**30	CSPH*3012A**	58MV(B,C)120−20	27,800	12.5	15.0	28,000	3.86	8.2	16,700	2.62
3675964	25HCC530A**30	CSPH*3012A**	58MVB040−14	27,600	12.0	14.5	28,200	3.80	8.1	16,800	2.58
3675975	25HCC530A**30	CSPH*3012A**	58PH*070−16	27,800	12.0	14.5	28,400	3.82	8.1	16,900	2.58
3675976	25HCC530A**30	CSPH*3012A**	58PH*090−16	27,800	12.0	14.5	28,200	3.84	8.2	16,800	2.60
3675988	25HCC530A**30	CSPH*3012A**	58UVB060−14	27,800	12.5	15.0	28,200	3.88	8.2	16,800	2.62
3675989	25HCC530A**30	CSPH*3012A**	58UVB080−14	27,600	12.0	14.5	28,200	3.78	8.1	16,700	2.58
3675990	25HCC530A**30	CSPH*3012A**	58UVB080−20	27,800	12.0	14.5	28,200	3.82	8.1	16,700	2.60
3675991	25HCC530A**30	CSPH*3012A**	58UVB100−20	27,600	12.0	14.5	28,000	3.76	8.0	16,600	2.58
3675992	25HCC530A**30	CSPH*3012A**	58UVB120−20	27,800	12.5	15.0	28,000	3.86	8.2	16,700	2.62
3675994	25HCC530A**30	CSPH*3012A**+TDR		27,800	11.2	13.0	29,200	3.74	8.0	17,700	2.52
3676001	25HCC530A**30	CSPH*3612A**	58CV(A,X)070−12	27,800	12.0	14.5	28,400	3.92	8.2	16,800	2.64
3676002	25HCC530A**30	CSPH*3612A**	58CV(A,X)090−16	27,800	12.5	15.0	28,200	3.96	8.3	16,700	2.66
3676003	25HCC530A**30	CSPH*3612A**	58CV(A,X)110−20	27,800	12.5	15.0	28,000	3.98	8.3	16,800	2.66
3676004	25HCC530A**30	CSPH*3612A**	58CV(A,X)135−22	27,800	12.5	15.0	28,200	3.98	8.3	16,700	2.66
3676005	25HCC530A**30	CSPH*3612A**	58CV(A,X)155−22	27,800	12.5	15.0	28,200	3.98	8.3	16,700	2.68
3676012	25HCC530A**30	CSPH*3612A**	58HDV040−−12	27,800	12.0	14.5	28,600	3.90	8.1	17,100	2.60
3676013	25HCC530A**30	CSPH*3612A**	58HDV060−−12	28,000	12.0	14.5	28,600	3.96	8.2	17,200	2.62
3676009	25HCC530A**30	CSPH*3612A**	58ME(B,C)060−12	28,000	12.5	15.0	28,600	4.06	8.5	17,000	2.70
3676010	25HCC530A**30	CSPH*3612A**	58ME(B,C)080−12	28,000	12.5	15.0	28,600	4.04	8.5	16,900	2.68
3676011	25HCC530A**30	CSPH*3612A**	58ME(B,C)080−16	28,000	12.5	15.0	28,800	4.08	8.5	17,100	2.70
3676008	25HCC530A**30	CSPH*3612A**	58MEB040−12	28,000	12.5	15.0	28,600	4.06	8.5	16,900	2.70
3675996	25HCC530A**30	CSPH*3612A**	58MV(B,C)060−14	27,800	12.5	15.0	28,400	4.00	8.5	16,800	2.68
3675997	25HCC530A**30	CSPH*3612A**	58MV(B,C)080−14	27,800	12.5	15.0	28,200	3.90	8.2	16,700	2.62
3675998	25HCC530A**30	CSPH*3612A**	58MV(B,C)080−20	27,800	12.5	15.0	28,000	3.94	8.3	16,800	2.64
3675999	25HCC530A**30	CSPH*3612A**	58MV(B,C)100−20	27,800	12.5	15.0	28,200	3.88	8.2	16,700	2.62
3676000	25HCC530A**30	CSPH*3612A**	58MV(B,C)120−20	27,800	12.5	15.0	28,200	3.98	8.3	16,700	2.66
3675995	25HCC530A**30	CSPH*3612A**	58MVB040−14	27,800	12.0	14.5	28,400	3.92	8.2	16,800	2.64
3676006	25HCC530A**30	CSPH*3612A**	58PH*070−16	28,000	12.0	14.5	28,600	3.96	8.3	17,000	2.64
3676007	25HCC530A**30	CSPH*3612A**	58PH*090−16	28,000	12.5	15.0	28,600	4.02	8.3	17,000	2.68
3676038	25HCC530A**30	CSPH*3612A**	58UVB060−14	27,800	12.5	15.0	28,400	4.00	8.5	16,800	2.68
3676039	25HCC530A**30	CSPH*3612A**	58UVB080−14	27,800	12.5	15.0	28,200	3.90	8.2	16,700	2.62
3676040	25HCC530A**30	CSPH*3612A**	58UVB080−20	27,800	12.5	15.0	28,000	3.94	8.3	16,800	2.64
3676041	25HCC530A**30	CSPH*3612A**	58UVB100−20	27,800	12.5	15.0	28,200	3.88	8.2	16,700	2.62
3676042	25HCC530A**30	CSPH*3612A**	58UVB120−20	27,800	12.5	15.0	28,200	3.98	8.3	16,700	2.66

See notes on pg. 26

COMBINATION RATINGS CONTINUED

AHRI Ref. No.	Model Number	Coil Model Number	Furnace Model Number	Cooling Capacity	EER	SEER	High Temp		HSPF	Low Temp	
							E Capacity	E COP		H Capacity	H COP
3676048	25HCC530A**30	CSPH*3612A**+TDR		27,800	11.2	13.0	29,200	3.86	8.0	17,800	2.54
3676268	25HCC536A**30	†FX4DN(B,F)037		34,800	12.5	15.0	35,200	3.88	8.7	22,000	2.64
3676191	25HCC536A**30	FE4AN(B,F)003+UI		33,800	12.0	14.5	34,200	3.70	8.2	21,200	2.56
3676194	25HCC536A**30	FE4AN(B,F)005+UI		35,000	12.5	15.0	34,600	3.92	8.6	21,600	2.66
3676197	25HCC536A**30	FE4ANB006+UI		35,400	13.0	15.5	34,400	4.02	8.7	21,600	2.72
3676204	25HCC536A**30	FE4ANF002+UI		33,600	12.0	14.0	34,600	3.68	8.1	21,600	2.52
3676216	25HCC536A**30	FF1ENP036		33,600	11.0	13.0	35,600	3.52	7.8	22,600	2.44
3676219	25HCC536A**30	FF1ENP037		33,600	11.2	13.0	35,400	3.58	7.9	22,400	2.48
3676222	25HCC536A**30	FV4BN(B,F)003		33,800	12.0	14.5	34,200	3.70	8.2	21,200	2.56
3676225	25HCC536A**30	FV4BN(B,F)005		35,000	12.5	15.0	34,600	3.92	8.6	21,600	2.66
3676228	25HCC536A**30	FV4BNB006		35,400	13.0	15.5	34,400	4.02	8.8	21,600	2.72
3676235	25HCC536A**30	FV4BNF002		33,600	12.0	14.0	34,600	3.68	8.1	21,600	2.52
3676238	25HCC536A**30	FV4CN(B,F)003		33,800	12.0	14.5	34,200	3.70	8.2	21,200	2.56
3676241	25HCC536A**30	FV4CN(B,F)005		35,000	12.5	15.0	34,600	3.92	8.6	21,600	2.66
3676244	25HCC536A**30	FV4CNB006		35,400	13.0	15.5	34,400	4.02	8.8	21,600	2.72
3676251	25HCC536A**30	FV4CNF002		33,600	12.0	14.0	34,600	3.68	8.1	21,600	2.52
3676253	25HCC536A**30	FX4CN(B,F)036		34,000	12.0	14.0	35,000	3.72	8.2	22,000	2.56
3676254	25HCC536A**30	FX4CN(B,F)042		34,600	12.0	14.0	35,400	3.78	8.3	22,200	2.58
3676269	25HCC536A**30	FX4DN(B,F)043		34,800	12.5	15.0	34,000	3.88	8.5	22,000	2.64
3676286	25HCC536A**30	FY4ANF036		33,600	11.0	13.0	35,600	3.54	7.8	22,600	2.44
3676287	25HCC536A**30	FY4ANF042		34,200	11.0	13.0	35,800	3.62	8.0	22,800	2.48
3675167	25HCC536A**30	CAP**3614A**	58CV(A,X)070–12	33,200	11.5	14.0	34,400	3.56	7.9	21,600	2.50
3675168	25HCC536A**30	CAP**3614A**	58PH*045–08	33,200	11.0	13.5	34,800	3.52	7.8	22,000	2.46
3675170	25HCC536A**30	CAP**3614A**+TDR		33,200	11.0	13.0	35,200	3.52	7.8	22,400	2.44
3675179	25HCC536A**30	CAP**3617A**	58CV(A,X)090–16	33,400	12.0	14.5	34,200	3.62	8.0	21,400	2.54
3675182	25HCC536A**30	CAP**3617A**	58ME(B,C)060–12	33,600	12.0	14.0	34,600	3.68	8.1	21,600	2.56
3675183	25HCC536A**30	CAP**3617A**	58ME(B,C)080–12	33,600	12.0	14.5	34,400	3.66	8.1	21,600	2.54
3675184	25HCC536A**30	CAP**3617A**	58ME(B,C)080–16	33,600	12.0	14.0	34,600	3.68	8.1	21,600	2.56
3675181	25HCC536A**30	CAP**3617A**	58MEB040–12	33,600	12.0	14.5	34,400	3.68	8.1	21,600	2.56
3675178	25HCC536A**30	CAP**3617A**	58MV(B,C)060–14	33,600	12.0	14.0	34,400	3.64	8.0	21,600	2.54
3675180	25HCC536A**30	CAP**3617A**	58PH*070–16	33,400	11.5	14.0	34,600	3.60	7.9	21,800	2.50
3675186	25HCC536A**30	CAP**3617A**	58UVB060–14	33,600	12.0	14.0	34,400	3.64	8.0	21,600	2.54
3675188	25HCC536A**30	CAP**3617A**+TDR		33,600	11.0	13.0	35,600	3.58	7.9	22,600	2.46
3675193	25HCC536A**30	CAP**3619A**	58HDV040––12	33,200	11.0	13.5	35,000	3.52	7.8	22,000	2.46
3675194	25HCC536A**30	CAP**3619A**	58HDV060––12	33,400	11.5	13.5	35,000	3.60	7.9	22,000	2.50
3675196	25HCC536A**30	CAP**3619A**+TDR		33,600	11.0	13.0	35,600	3.58	7.9	22,600	2.46
3675205	25HCC536A**30	CAP**3621A**	58CV(A,X)110–20	33,600	12.0	14.5	34,200	3.66	8.0	21,400	2.54
3675208	25HCC536A**30	CAP**3621A**	58ME(B,C)100–20	33,600	12.0	14.5	34,200	3.70	8.1	21,400	2.58
3675202	25HCC536A**30	CAP**3621A**	58MV(B,C)080–14	33,400	12.0	14.0	34,400	3.62	8.0	21,600	2.52
3675203	25HCC536A**30	CAP**3621A**	58MV(B,C)080–20	33,400	12.0	14.5	34,200	3.62	8.0	21,400	2.52
3675204	25HCC536A**30	CAP**3621A**	58MV(B,C)100–20	33,600	12.0	14.5	34,400	3.66	8.0	21,400	2.54
3675206	25HCC536A**30	CAP**3621A**	58PH*090–16	33,800	12.0	14.5	34,400	3.72	8.2	21,600	2.58
3675207	25HCC536A**30	CAP**3621A**	58PH*110–20	34,000	12.0	14.5	34,600	3.74	8.2	21,600	2.60
3675212	25HCC536A**30	CAP**3621A**	58UVB080–14	33,400	12.0	14.0	34,400	3.62	8.0	21,600	2.52
3675213	25HCC536A**30	CAP**3621A**	58UVB080–20	33,400	12.0	14.5	34,200	3.62	8.0	21,400	2.52
3675214	25HCC536A**30	CAP**3621A**	58UVB100–20	33,600	12.0	14.5	34,400	3.66	8.0	21,400	2.54
3675216	25HCC536A**30	CAP**3621A**+TDR		33,600	11.0	13.0	35,600	3.58	7.9	22,600	2.46
3675220	25HCC536A**30	CAP**4221A**	58CV(A,X)110–20	33,800	12.0	14.5	34,400	3.70	8.1	21,400	2.56
3675223	25HCC536A**30	CAP**4221A**	58ME(B,C)100–20	34,000	12.0	14.5	34,400	3.74	8.2	21,400	2.60
3675217	25HCC536A**30	CAP**4221A**	58MV(B,C)080–14	33,600	12.0	14.0	34,600	3.66	8.1	21,600	2.54
3675218	25HCC536A**30	CAP**4221A**	58MV(B,C)080–20	33,600	12.0	14.5	34,400	3.66	8.1	21,400	2.54
3675219	25HCC536A**30	CAP**4221A**	58MV(B,C)100–20	33,800	12.0	14.5	34,400	3.70	8.1	21,600	2.56
3675221	25HCC536A**30	CAP**4221A**	58PH*090–16	34,000	12.0	14.5	34,600	3.76	8.2	21,600	2.60
3675222	25HCC536A**30	CAP**4221A**	58PH*110–20	34,200	12.0	14.5	34,600	3.78	8.3	21,600	2.62
3675231	25HCC536A**30	CAP**4221A**	58UVB080–14	33,600	12.0	14.0	34,600	3.66	8.1	21,600	2.54
3675232	25HCC536A**30	CAP**4221A**	58UVB080–20	33,600	12.0	14.5	34,400	3.66	8.1	21,400	2.54
3675233	25HCC536A**30	CAP**4221A**	58UVB100–20	33,800	12.0	14.5	34,400	3.70	8.1	21,600	2.56
3675237	25HCC536A**30	CAP**4221A**+TDR		33,800	11.0	13.0	35,600	3.62	8.0	22,600	2.48
3675241	25HCC536A**30	CAP**4224A**	58CV(A,X)135–22	33,800	12.0	14.5	34,200	3.70	8.2	21,400	2.58
3675242	25HCC536A**30	CAP**4224A**	58CV(A,X)155–22	33,800	12.5	15.0	34,200	3.74	8.2	21,200	2.60
3675243	25HCC536A**30	CAP**4224A**	58HDV100––20	34,200	12.0	14.5	34,800	3.78	8.3	21,800	2.60
3675240	25HCC536A**30	CAP**4224A**	58MV(B,C)120–20	33,800	12.0	14.5	34,200	3.70	8.1	21,400	2.58
3675239	25HCC536A**30	CAP**4224A**	58MVB040–14	33,600	12.0	14.0	34,400	3.64	8.0	21,600	2.52
3675251	25HCC536A**30	CAP**4224A**	58UVB120–20	33,800	12.0	14.5	34,200	3.70	8.1	21,400	2.58
3675253	25HCC536A**30	CAP**4224A**+TDR		33,800	11.0	13.0	35,600	3.62	8.0	22,600	2.48
3675338	25HCC536A**30	CNPF*3618A**+TDR		33,600	11.0	13.0	35,600	3.56	7.9	22,600	2.46
3675454	25HCC536A**30	CNPH*3617A**	58CV(A,X)070–12	33,200	11.5	14.0	34,400	3.56	7.9	21,600	2.50
3675455	25HCC536A**30	CNPH*3617A**	58CV(A,X)090–16	33,400	12.0	14.0	34,200	3.60	7.9	21,400	2.52
3675456	25HCC536A**30	CNPH*3617A**	58CV(A,X)110–20	33,400	12.0	14.0	34,200	3.62	8.0	21,400	2.52
3675457	25HCC536A**30	CNPH*3617A**	58CV(A,X)135–22	33,400	12.0	14.5	34,200	3.62	8.0	21,400	2.52
3675458	25HCC536A**30	CNPH*3617A**	58CV(A,X)155–22	33,400	12.0	14.5	34,200	3.64	8.0	21,400	2.54
3675468	25HCC536A**30	CNPH*3617A**	58HDV040––12	33,200	11.0	13.5	34,800	3.50	7.7	22,000	2.44
3675469	25HCC536A**30	CNPH*3617A**	58HDV060––12	33,400	11.5	13.5	34,800	3.56	7.9	22,000	2.48
3675470	25HCC536A**30	CNPH*3617A**	58HDV080––20	33,800	11.5	14.0	35,000	3.66	8.1	22,000	2.54
3675471	25HCC536A**30	CNPH*3617A**	58HDV100––20	33,800	12.0	14.0	34,600	3.64	8.0	21,600	2.54
3675464	25HCC536A**30	CNPH*3617A**	58ME(B,C)060–12	33,600	12.0	14.0	34,400	3.64	8.0	21,600	2.54
3675465	25HCC536A**30	CNPH*3617A**	58ME(B,C)080–12	33,400	12.0	14.0	34,400	3.62	8.0	21,400	2.52
3675466	25HCC536A**30	CNPH*3617A**	58ME(B,C)080–16	33,400	12.0	14.0	34,400	3.64	8.0	21,600	2.54
3675467	25HCC536A**30	CNPH*3617A**	58ME(B,C)100–20	33,400	12.0	14.5	34,200	3.62	8.0	21,200	2.54
3675463	25HCC536A**30	CNPH*3617A**	58MEB040–12	33,400	12.0	14.0	34,400	3.64	8.0	21,400	2.54
3675449	25HCC536A**30	CNPH*3617A**	58MV(B,C)060–14	33,400	12.0	14.0	34,400	3.62	8.0	21,600	2.52
3675450	25HCC536A**30	CNPH*3617A**	58MV(B,C)080–14	33,200	11.5	14.0	34,400	3.58	7.9	21,600	2.50
3675451	25HCC536A**30	CNPH*3617A**	58MV(B,C)080–20	33,200	11.5	14.0	34,200	3.58	7.9	21,400	2.50
3675452	25HCC536A**30	CNPH*3617A**	58MV(B,C)100–20	33,400	12.0	14.0	34,400	3.62	8.0	21,600	2.52
3675453	25HCC536A**30	CNPH*3617A**	58MV(B,C)120–20	33,400	12.0	14.0	34,200	3.60	7.9	21,400	2.52
3675448	25HCC536A**30	CNPH*3617A**	58MVB040–14	33,200	11.5	14.0	34,400	3.54	7.8	21,600	2.48

See notes on pg. 26

COMBINATION RATINGS CONTINUED

AHRI Ref. No.	Model Number	Coil Model Number	Furnace Model Number	Cooling Capacity	EER	SEER	High Temp		HSPF	Low Temp	
							E Capacity	E COP		H Capacity	H COP
3675459	25HCC536A**30	CNPH*3617A**	58PH*045−08	33,200	11.2	13.5	34,800	3.52	7.8	22,000	2.46
3675460	25HCC536A**30	CNPH*3617A**	58PH*070−16	33,200	11.5	13.5	34,600	3.56	7.8	21,600	2.48
3675461	25HCC536A**30	CNPH*3617A**	58PH*090−16	33,400	12.0	14.5	34,400	3.64	8.0	21,400	2.54
3675462	25HCC536A**30	CNPH*3617A**	58PH*110−20	33,600	12.0	14.5	34,400	3.66	8.1	21,400	2.56
3675477	25HCC536A**30	CNPH*3617A**	58UVB060−14	33,400	12.0	14.0	34,400	3.62	8.0	21,600	2.52
3675478	25HCC536A**30	CNPH*3617A**	58UVB080−14	33,200	11.5	14.0	34,400	3.58	7.9	21,600	2.50
3675479	25HCC536A**30	CNPH*3617A**	58UVB080−20	33,200	11.5	14.0	34,200	3.58	7.9	21,400	2.50
3675480	25HCC536A**30	CNPH*3617A**	58UVB100−20	33,400	12.0	14.0	34,400	3.62	8.0	21,600	2.52
3675481	25HCC536A**30	CNPH*3617A**	58UVB120−20	33,400	12.0	14.0	34,200	3.60	7.9	21,400	2.52
3675483	25HCC536A**30	CNPH*3617A**+TDR		33,600	11.0	13.0	35,600	3.56	7.9	22,600	2.46
3675490	25HCC536A**30	CNPH*4221A**	58CV(A,X)070−12	33,600	12.0	14.0	34,600	3.64	8.0	21,600	2.52
3675491	25HCC536A**30	CNPH*4221A**	58CV(A,X)090−16	33,600	12.0	14.5	34,400	3.68	8.1	21,400	2.56
3675492	25HCC536A**30	CNPH*4221A**	58CV(A,X)110−20	33,800	12.0	14.5	34,400	3.70	8.1	21,600	2.56
3675493	25HCC536A**30	CNPH*4221A**	58CV(A,X)135−22	33,800	12.0	14.5	34,200	3.70	8.1	21,400	2.56
3675494	25HCC536A**30	CNPH*4221A**	58CV(A,X)155−22	33,800	12.0	14.5	34,200	3.72	8.2	21,400	2.58
3675504	25HCC536A**30	CNPH*4221A**	58HDV040−−12	33,800	11.5	13.5	35,000	3.58	7.9	22,200	2.48
3675505	25HCC536A**30	CNPH*4221A**	58HDV060−−12	33,800	11.5	14.0	35,000	3.64	8.0	22,000	2.52
3675506	25HCC536A**30	CNPH*4221A**	58HDV080−−20	34,200	12.0	14.0	35,000	3.76	8.2	22,200	2.58
3675507	25HCC536A**30	CNPH*4221A**	58HDV100−−20	34,200	12.2	14.5	34,800	3.74	8.2	21,800	2.58
3675500	25HCC536A**30	CNPH*4221A**	58ME(B,C)060−12	34,000	12.0	14.5	34,600	3.74	8.2	21,800	2.58
3675501	25HCC536A**30	CNPH*4221A**	58ME(B,C)080−12	34,000	12.0	14.5	34,600	3.72	8.2	21,600	2.58
3675502	25HCC536A**30	CNPH*4221A**	58ME(B,C)080−16	34,000	12.0	14.5	34,600	3.72	8.2	21,800	2.58
3675503	25HCC536A**30	CNPH*4221A**	58ME(B,C)100−20	33,800	12.0	14.5	34,400	3.72	8.2	21,400	2.58
3675499	25HCC536A**30	CNPH*4221A**	58MEB040−12	34,000	12.0	14.5	34,600	3.74	8.2	21,600	2.58
3675485	25HCC536A**30	CNPH*4221A**	58MV(B,C)060−14	33,800	12.0	14.5	34,600	3.70	8.1	21,600	2.56
3675486	25HCC536A**30	CNPH*4221A**	58MV(B,C)080−14	33,600	12.0	14.0	34,600	3.66	8.0	21,600	2.54
3675487	25HCC536A**30	CNPH*4221A**	58MV(B,C)080−20	33,600	12.0	14.0	34,400	3.66	8.0	21,600	2.54
3675488	25HCC536A**30	CNPH*4221A**	58MV(B,C)100−20	33,800	12.0	14.5	34,400	3.70	8.1	21,600	2.56
3675489	25HCC536A**30	CNPH*4221A**	58MV(B,C)120−20	33,800	12.0	14.5	34,200	3.68	8.1	21,400	2.56
3675484	25HCC536A**30	CNPH*4221A**	58MVB040−14	33,600	11.5	14.0	34,400	3.62	8.0	21,600	2.52
3675495	25HCC536A**30	CNPH*4221A**	58PH*045−08	33,600	11.2	13.5	35,000	3.60	7.9	22,200	2.50
3675496	25HCC536A**30	CNPH*4221A**	58PH*070−16	33,600	11.5	14.0	34,800	3.64	8.0	21,800	2.52
3675497	25HCC536A**30	CNPH*4221A**	58PH*090−16	34,000	12.0	14.5	34,600	3.74	8.2	21,600	2.58
3675498	25HCC536A**30	CNPH*4221A**	58PH*110−20	34,000	12.0	14.5	34,600	3.76	8.3	21,600	2.60
3675531	25HCC536A**30	CNPH*4221A**	58UVB060−14	33,800	12.0	14.5	34,600	3.70	8.1	21,600	2.56
3675532	25HCC536A**30	CNPH*4221A**	58UVB080−14	33,600	12.0	14.0	34,600	3.66	8.0	21,600	2.54
3675533	25HCC536A**30	CNPH*4221A**	58UVB080−20	33,600	12.0	14.0	34,400	3.66	8.0	21,600	2.54
3675534	25HCC536A**30	CNPH*4221A**	58UVB100−20	33,800	12.0	14.5	34,400	3.70	8.1	21,600	2.56
3675535	25HCC536A**30	CNPH*4221A**	58UVB120−20	33,800	12.0	14.5	34,200	3.68	8.1	21,400	2.56
3675541	25HCC536A**30	CNPH*4221A**+TDR		33,800	11.0	13.0	35,600	3.62	8.0	22,800	2.48
3675543	25HCC536A**30	CNPH*4321A**	58HDV040−−12	34,200	11.5	14.0	35,400	3.76	8.2	22,400	2.56
3675544	25HCC536A**30	CNPH*4321A**	58HDV060−−12	34,200	12.0	14.5	35,400	3.86	8.4	22,400	2.60
3675545	25HCC536A**30	CNPH*4321A**	58HDV080−−20	34,200	12.2	14.5	35,400	3.98	8.6	22,400	2.68
3675546	25HCC536A**30	CNPH*4321A**	58HDV100−−20	34,200	12.5	15.0	35,200	3.96	8.6	22,200	2.68
3675730	25HCC536A**30	CNPV*3617A**	58CV(A,X)090−16	33,400	12.0	14.0	34,200	3.60	7.9	21,400	2.52
3675733	25HCC536A**30	CNPV*3617A**	58ME(B,C)060−12	33,600	12.0	14.0	34,400	3.64	8.0	21,600	2.54
3675734	25HCC536A**30	CNPV*3617A**	58ME(B,C)080−12	33,400	12.0	14.0	34,400	3.62	8.0	21,400	2.52
3675735	25HCC536A**30	CNPV*3617A**	58ME(B,C)080−16	33,400	12.0	14.0	34,400	3.64	8.0	21,600	2.54
3675732	25HCC536A**30	CNPV*3617A**	58MEB040−12	33,400	12.0	14.0	34,400	3.64	8.0	21,400	2.54
3675729	25HCC536A**30	CNPV*3617A**	58MV(B,C)060−14	33,400	12.0	14.0	34,400	3.62	8.0	21,600	2.52
3675731	25HCC536A**30	CNPV*3617A**	58PH*070−16	33,200	11.5	13.5	34,600	3.56	7.8	21,600	2.48
3675737	25HCC536A**30	CNPV*3617A**	58UVB060−14	33,400	12.0	14.0	34,400	3.62	8.0	21,600	2.52
3675739	25HCC536A**30	CNPV*3617A**+TDR		33,600	11.0	13.0	35,600	3.56	7.9	22,600	2.46
3675748	25HCC536A**30	CNPV*3621A**	58CV(A,X)110−20	33,400	12.0	14.0	34,200	3.62	8.0	21,400	2.52
3675751	25HCC536A**30	CNPV*3621A**	58ME(B,C)100−20	33,400	12.0	14.5	34,200	3.62	8.0	21,200	2.54
3675745	25HCC536A**30	CNPV*3621A**	58MV(B,C)080−14	33,200	11.5	14.0	34,400	3.58	7.9	21,600	2.50
3675746	25HCC536A**30	CNPV*3621A**	58MV(B,C)080−20	33,200	12.0	14.0	34,200	3.58	7.9	21,400	2.50
3675747	25HCC536A**30	CNPV*3621A**	58MV(B,C)100−20	33,400	12.0	14.0	34,400	3.62	8.0	21,600	2.52
3675749	25HCC536A**30	CNPV*3621A**	58PH*090−16	33,600	12.0	14.5	34,400	3.64	8.0	21,400	2.54
3675750	25HCC536A**30	CNPV*3621A**	58PH*110−20	33,600	12.0	14.5	34,400	3.68	8.1	21,400	2.56
3675755	25HCC536A**30	CNPV*3621A**	58UVB080−14	33,200	11.5	14.0	34,400	3.58	7.9	21,600	2.50
3675756	25HCC536A**30	CNPV*3621A**	58UVB080−20	33,200	12.0	14.0	34,200	3.58	7.9	21,400	2.50
3675757	25HCC536A**30	CNPV*3621A**	58UVB100−20	33,400	12.0	14.0	34,400	3.62	8.0	21,600	2.52
3675759	25HCC536A**30	CNPV*3621A**+TDR		33,600	11.0	13.0	35,600	3.56	7.9	22,600	2.46
3675768	25HCC536A**30	CNPV*3717A**	58CV(A,X)090−16	34,600	12.5	15.0	34,800	3.86	8.4	21,600	2.64
3675771	25HCC536A**30	CNPV*3717A**	58ME(B,C)060−12	35,000	12.5	15.0	35,200	3.92	8.6	22,000	2.66
3675772	25HCC536A**30	CNPV*3717A**	58ME(B,C)080−12	34,800	12.5	15.0	35,000	3.90	8.5	21,800	2.66
3675773	25HCC536A**30	CNPV*3717A**	58ME(B,C)080−16	35,000	12.5	15.0	35,200	3.92	8.5	22,000	2.66
3675770	25HCC536A**30	CNPV*3717A**	58MEB040−12	35,000	12.5	15.0	35,000	3.92	8.5	22,000	2.66
3675767	25HCC536A**30	CNPV*3717A**	58MV(B,C)060−14	34,800	12.5	15.0	35,000	3.88	8.5	22,000	2.64
3675769	25HCC536A**30	CNPV*3717A**	58PH*070−16	34,600	12.0	14.5	35,200	3.82	8.4	22,200	2.60
3675775	25HCC536A**30	CNPV*3717A**	58UVB060−14	34,800	12.5	15.0	35,000	3.88	8.5	22,000	2.64
3675777	25HCC536A**30	CNPV*3717A**+TDR		35,000	11.5	13.5	36,000	3.78	8.3	23,000	2.56
3675779	25HCC536A**30	CNPV*4217A**	58CV(A,X)090−16	34,000	12.0	14.5	34,600	3.74	8.2	21,600	2.58
3675782	25HCC536A**30	CNPV*4217A**	58ME(B,C)060−12	34,200	12.0	14.5	34,800	3.78	8.3	21,800	2.60
3675783	25HCC536A**30	CNPV*4217A**	58ME(B,C)080−12	34,200	12.0	14.5	34,800	3.76	8.3	21,800	2.60
3675784	25HCC536A**30	CNPV*4217A**	58ME(B,C)080−16	34,200	12.0	14.5	34,800	3.78	8.3	21,800	2.60
3675781	25HCC536A**30	CNPV*4217A**	58MEB040−12	34,200	12.0	14.5	34,800	3.78	8.3	21,800	2.60
3675778	25HCC536A**30	CNPV*4217A**	58MV(B,C)060−14	34,200	12.0	14.5	34,800	3.76	8.2	21,800	2.58
3675780	25HCC536A**30	CNPV*4217A**	58PH*070−16	34,000	12.0	14.0	35,000	3.70	8.1	22,000	2.54
3675792	25HCC536A**30	CNPV*4217A**	58UVB060−14	34,200	12.0	14.5	34,800	3.76	8.2	21,800	2.58
3675794	25HCC536A**30	CNPV*4217A**+TDR		34,000	11.0	13.0	35,800	3.68	8.1	22,800	2.50
3675799	25HCC536A**30	CNPV*4221A**	58CV(A,X)110−20	33,800	12.0	14.5	34,400	3.70	8.1	21,600	2.56
3675802	25HCC536A**30	CNPV*4221A**	58ME(B,C)100−20	33,800	12.0	14.5	34,400	3.72	8.2	21,400	2.58
3675796	25HCC536A**30	CNPV*4221A**	58MV(B,C)080−14	33,600	12.0	14.0	34,600	3.66	8.0	21,600	2.54
3675797	25HCC536A**30	CNPV*4221A**	58MV(B,C)080−20	33,600	12.0	14.0	34,400	3.66	8.0	21,600	2.54
3675798	25HCC536A**30	CNPV*4221A**	58MV(B,C)100−20	33,800	12.0	14.5	34,400	3.70	8.1	21,600	2.56

See notes on pg. 26

COMBINATION RATINGS CONTINUED

AHRI Ref. No.	Model Number	Coil Model Number	Furnace Model Number	Cooling Capacity	EER	SEER	High Temp		HSPF	Low Temp	
							E Capacity	E COP		H Capacity	H COP
3675800	25HCC536A**30	CNPV*4221A**	58PH*090−16	34,000	12.0	14.5	34,600	3.74	8.2	21,600	2.58
3675801	25HCC536A**30	CNPV*4221A**	58PH*110−20	34,000	12.0	14.5	34,600	3.76	8.3	21,600	2.60
3675810	25HCC536A**30	CNPV*4221A**	58UVB080−14	33,600	12.0	14.0	34,600	3.66	8.0	21,600	2.54
3675811	25HCC536A**30	CNPV*4221A**	58UVB080−20	33,600	12.0	14.0	34,400	3.66	8.0	21,600	2.54
3675812	25HCC536A**30	CNPV*4221A**	58UVB100−20	33,800	12.0	14.5	34,400	3.70	8.1	21,600	2.56
3675816	25HCC536A**30	CNPV*4221A**+TDR		33,800	11.0	13.0	35,600	3.62	8.0	22,800	2.48
3675821	25HCC536A**30	CNPV*4324A**	58CV(A,X)135−22	34,800	12.5	15.0	34,600	3.92	8.5	21,600	2.68
3675822	25HCC536A**30	CNPV*4324A**	58CV(A,X)155−22	34,800	12.5	15.5	34,600	3.94	8.6	21,400	2.68
3676314	25HCC536A**30	CNPV*4324A**	58HDV100−−20(D NFLWONLY)	35,400	12.5	15.0	35,400	3.98	8.7	22,200	2.68
3675823	25HCC536A**30	CNPV*4324A**	58MV(B,C)080−14	35,000	12.5	15.0	35,000	3.86	8.5	21,800	2.64
3675824	25HCC536A**30	CNPV*4324A**	58MV(B,C)080−20	35,000	12.5	15.0	34,800	3.86	8.5	21,800	2.64
3675820	25HCC536A**30	CNPV*4324A**	58MV(B,C)120−20	34,800	12.5	15.0	34,800	3.90	8.5	21,600	2.66
3675819	25HCC536A**30	CNPV*4324A**	58MVB040−14	34,600	12.2	14.5	34,800	3.84	8.4	21,800	2.62
3675838	25HCC536A**30	CNPV*4324A**	58UVB080−14	35,000	12.5	15.0	35,000	3.86	8.5	21,800	2.64
3675839	25HCC536A**30	CNPV*4324A**	58UVB080−20	35,000	12.5	15.0	34,800	3.86	8.5	21,800	2.64
3675837	25HCC536A**30	CNPV*4324A**	58UVB120−20	34,800	12.5	15.0	34,800	3.90	8.5	21,600	2.66
3675818	25HCC536A**30	CNPV*4324A**		35,000	11.5	13.5	36,000	3.78	8.3	23,000	2.56
3675843	25HCC536A**30	CNPV*4821A**	58MV(B,C)080−14	34,200	12.0	14.5	34,800	3.78	8.3	21,800	2.60
3675857	25HCC536A**30	CNPV*4821A**	58UVB080−14	34,200	12.0	14.5	34,800	3.78	8.3	21,800	2.60
3675880	25HCC536A**30	CNPV*6024A**	58MV(B,C)080−14	34,600	12.0	14.5	34,800	3.84	8.4	21,800	2.62
3675890	25HCC536A**30	CNPV*6024A**	58UVB080−14	34,600	12.0	14.5	34,800	3.84	8.4	21,800	2.62
3676020	25HCC536A**30	CSPH*3612A**	58CV(A,X)070−12	33,400	12.0	14.0	34,600	3.70	7.9	21,800	2.56
3676021	25HCC536A**30	CSPH*3612A**	58CV(A,X)090−16	33,600	12.0	14.5	34,600	3.74	8.0	21,600	2.58
3676022	25HCC536A**30	CSPH*3612A**	58CV(A,X)110−20	33,600	12.0	14.5	34,600	3.76	8.0	21,600	2.60
3676023	25HCC536A**30	CSPH*3612A**	58CV(A,X)135−22	33,600	12.0	14.5	34,600	3.76	8.0	21,600	2.60
3676024	25HCC536A**30	CSPH*3612A**	58CV(A,X)155−22	33,600	12.0	14.5	34,400	3.80	8.1	21,400	2.62
3676034	25HCC536A**30	CSPH*3612A**	58HDV040−−12	33,200	11.0	13.5	34,800	3.64	7.8	22,200	2.50
3676035	25HCC536A**30	CSPH*3612A**	58HDV060−−12	33,400	11.5	13.5	34,800	3.72	7.9	22,200	2.54
3676036	25HCC536A**30	CSPH*3612A**	58HDV080−−20	33,800	11.5	14.0	35,000	3.84	8.1	22,200	2.60
3676037	25HCC536A**30	CSPH*3612A**	58HDV100−−20	33,800	12.0	14.0	34,600	3.80	8.0	22,000	2.60
3676030	25HCC536A**30	CSPH*3612A**	58ME(B,C)060−12	33,800	12.0	14.0	34,800	3.80	8.1	21,800	2.60
3676031	25HCC536A**30	CSPH*3612A**	58ME(B,C)080−12	33,600	12.0	14.5	34,800	3.78	8.1	21,800	2.60
3676032	25HCC536A**30	CSPH*3612A**	58ME(B,C)080−16	33,600	12.0	14.0	34,800	3.80	8.1	21,800	2.60
3676033	25HCC536A**30	CSPH*3612A**	58ME(B,C)100−20	33,600	12.0	14.5	34,600	3.78	8.1	21,400	2.62
3676029	25HCC536A**30	CSPH*3612A**	58MEB040−12	33,600	12.0	14.5	34,800	3.80	8.1	21,800	2.60
3676015	25HCC536A**30	CSPH*3612A**	58MV(B,C)060−14	33,600	12.0	14.0	34,800	3.78	8.1	21,800	2.60
3676016	25HCC536A**30	CSPH*3612A**	58MV(B,C)080−14	33,400	12.0	14.0	34,800	3.72	8.0	21,800	2.56
3676017	25HCC536A**30	CSPH*3612A**	58MV(B,C)080−20	33,400	12.0	14.0	34,600	3.72	8.0	21,600	2.58
3676018	25HCC536A**30	CSPH*3612A**	58MV(B,C)100−20	33,600	12.0	14.0	34,800	3.76	8.0	21,800	2.58
3676019	25HCC536A**30	CSPH*3612A**	58MV(B,C)120−20	33,600	12.0	14.5	34,600	3.76	8.0	21,600	2.60
3676014	25HCC536A**30	CSPH*3612A**	58MVB040−14	33,400	11.5	14.0	34,800	3.70	7.9	21,800	2.54
3676025	25HCC536A**30	CSPH*3612A**	58PH*045−08	33,400	11.5	13.5	35,200	3.66	7.9	22,200	2.52
3676026	25HCC536A**30	CSPH*3612A**	58PH*070−16	33,400	12.0	14.0	35,000	3.72	7.9	22,000	2.56
3676027	25HCC536A**30	CSPH*3612A**	58PH*090−16	33,600	12.0	14.5	34,800	3.80	8.1	21,600	2.62
3676028	25HCC536A**30	CSPH*3612A**	58PH*110−20	33,800	12.0	14.5	34,800	3.84	8.2	21,800	2.62
3676043	25HCC536A**30	CSPH*3612A**	58UVB060−14	33,600	12.0	14.0	34,800	3.78	8.1	21,800	2.60
3676044	25HCC536A**30	CSPH*3612A**	58UVB080−14	33,400	12.0	14.0	34,800	3.72	8.0	21,800	2.56
3676045	25HCC536A**30	CSPH*3612A**	58UVB080−20	33,400	12.0	14.0	34,600	3.72	8.0	21,600	2.58
3676046	25HCC536A**30	CSPH*3612A**	58UVB100−20	33,600	12.0	14.0	34,800	3.76	8.0	21,800	2.58
3676047	25HCC536A**30	CSPH*3612A**	58UVB120−20	33,600	12.0	14.5	34,600	3.76	8.0	21,600	2.60
3676049	25HCC536A**30	CSPH*3612A**+TDR		33,600	11.0	13.0	35,600	3.68	7.9	22,800	2.52
3676056	25HCC536A**30	CSPH*4212A**	58CV(A,X)070−12	33,800	12.0	14.0	34,800	3.74	8.1	21,800	2.58
3676057	25HCC536A**30	CSPH*4212A**	58CV(A,X)090−16	33,800	12.0	14.5	34,600	3.78	8.2	21,600	2.60
3676058	25HCC536A**30	CSPH*4212A**	58CV(A,X)110−20	34,000	12.0	14.5	34,600	3.80	8.2	21,600	2.62
3676059	25HCC536A**30	CSPH*4212A**	58CV(A,X)135−22	34,000	12.0	14.5	34,600	3.80	8.2	21,600	2.62
3676060	25HCC536A**30	CSPH*4212A**	58CV(A,X)155−22	34,000	12.5	15.0	34,600	3.84	8.3	21,400	2.64
3676070	25HCC536A**30	CSPH*4212A**	58HDV040−−12	33,800	11.5	13.5	35,000	3.68	7.9	22,400	2.52
3676071	25HCC536A**30	CSPH*4212A**	58HDV060−−12	33,800	11.5	14.0	35,000	3.76	8.0	22,200	2.58
3676072	25HCC536A**30	CSPH*4212A**	58HDV080−−20	34,200	12.0	14.0	35,000	3.88	8.2	22,200	2.64
3676073	25HCC536A**30	CSPH*4212A**	58HDV100−−20	34,200	12.2	14.5	34,800	3.86	8.2	22,000	2.64
3676066	25HCC536A**30	CSPH*4212A**	58ME(B,C)060−12	34,200	12.0	14.5	35,000	3.86	8.3	21,800	2.64
3676067	25HCC536A**30	CSPH*4212A**	58ME(B,C)080−12	34,200	12.0	14.5	34,800	3.84	8.3	21,800	2.62
3676068	25HCC536A**30	CSPH*4212A**	58ME(B,C)080−16	34,200	12.0	14.5	35,000	3.84	8.3	21,800	2.62
3676069	25HCC536A**30	CSPH*4212A**	58ME(B,C)100−20	34,000	12.5	15.0	34,600	3.84	8.3	21,600	2.64
3676065	25HCC536A**30	CSPH*4212A**	58MEB040−12	34,200	12.0	14.5	34,800	3.86	8.3	21,800	2.64
3676051	25HCC536A**30	CSPH*4212A**	58MV(B,C)060−14	34,000	12.0	14.5	34,800	3.82	8.2	21,800	2.62
3676052	25HCC536A**30	CSPH*4212A**	58MV(B,C)080−14	33,800	12.0	14.0	34,800	3.76	8.1	21,800	2.58
3676053	25HCC536A**30	CSPH*4212A**	58MV(B,C)080−20	33,800	12.0	14.5	34,800	3.76	8.1	21,600	2.60
3676054	25HCC536A**30	CSPH*4212A**	58MV(B,C)100−20	34,000	12.0	14.5	34,800	3.80	8.2	21,800	2.60
3676055	25HCC536A**30	CSPH*4212A**	58MV(B,C)120−20	34,000	12.0	14.5	34,600	3.80	8.2	21,600	2.62
3676050	25HCC536A**30	CSPH*4212A**	58MVB040−14	33,800	12.0	14.0	34,800	3.72	8.1	21,800	2.56
3676061	25HCC536A**30	CSPH*4212A**	58PH*045−08	33,800	11.2	13.5	35,400	3.70	8.0	22,400	2.54
3676062	25HCC536A**30	CSPH*4212A**	58PH*070−16	33,800	12.0	14.0	35,000	3.76	8.1	22,000	2.58
3676063	25HCC536A**30	CSPH*4212A**	58PH*090−16	34,200	12.0	14.5	34,800	3.86	8.3	21,800	2.64
3676064	25HCC536A**30	CSPH*4212A**	58PH*110−20	34,200	12.0	14.5	34,800	3.90	8.3	21,800	2.66
3676097	25HCC536A**30	CSPH*4212A**	58UVB060−14	34,000	12.0	14.5	34,800	3.82	8.2	21,800	2.62
3676098	25HCC536A**30	CSPH*4212A**	58UVB080−14	33,800	12.0	14.0	34,800	3.76	8.1	21,800	2.58
3676099	25HCC536A**30	CSPH*4212A**	58UVB080−20	33,800	12.0	14.5	34,800	3.76	8.1	21,600	2.60
3676100	25HCC536A**30	CSPH*4212A**	58UVB100−20	34,000	12.0	14.5	34,800	3.80	8.2	21,800	2.60
3676101	25HCC536A**30	CSPH*4212A**	58UVB120−20	34,000	12.0	14.5	34,600	3.80	8.2	21,600	2.62
3676107	25HCC536A**30	CSPH*4212A**+TDR		33,800	11.0	13.0	35,600	3.72	8.1	22,800	2.52
3676270	25HCC542A**30	†FX4DN(B,F)043		41,500	12.5	15.0	41,500	3.80	8.7	26,800	2.60
3676192	25HCC542A**30	FE4AN(B,F)003+UI		40,500	12.0	14.5	41,500	3.68	8.2	25,800	2.54
3676195	25HCC542A**30	FE4AN(B,F)005+UI		42,000	13.0	15.5	42,000	3.88	8.6	26,200	2.66
3676198	25HCC542A**30	FE4ANB006+UI		42,000	13.0	16.0	42,000	4.00	9.0	26,200	2.70

See notes on pg. 26

COMBINATION RATINGS CONTINUED

AHRI Ref. No.	Model Number	Coil Model Number	Furnace Model Number	Cooling Capacity	EER	SEER	High Temp		HSPF	Low Temp	
							E Capacity	E COP		H Capacity	H COP
3676223	25HCC542A**30	FV4BN(B,F)003		40,500	12.0	14.5	41,500	3.68	8.2	25,800	2.54
3676226	25HCC542A**30	FV4BN(B,F)005		42,000	13.0	15.5	42,000	3.88	8.6	26,200	2.66
3676229	25HCC542A**30	FV4BNB006		42,000	13.0	16.0	42,000	4.00	9.0	26,200	2.70
3676239	25HCC542A**30	FV4CN(B,F)003		40,500	12.0	14.5	41,500	3.68	8.2	25,800	2.54
3676242	25HCC542A**30	FV4CN(B,F)005		42,000	13.0	15.5	42,000	3.88	8.6	26,200	2.66
3676245	25HCC542A**30	FV4CNB006		42,000	13.0	16.0	42,000	4.00	9.0	26,200	2.70
3676255	25HCC542A**30	FX4CN(B,F)042		42,000	12.0	14.5	42,000	3.78	8.3	26,800	2.58
3676256	25HCC542A**30	FX4CN(B,F)048		42,000	12.5	15.0	42,000	3.90	8.5	26,800	2.64
3676271	25HCC542A**30	FX4DN(B,F)049		42,000	13.0	15.5	42,000	3.96	8.6	26,800	2.68
3676288	25HCC542A**30	FY4ANF042		41,500	11.5	13.5	42,000	3.62	8.0	27,400	2.48
3676289	25HCC542A**30	FY4ANF048		42,000	11.5	14.0	42,000	3.72	8.2	27,600	2.52
3675227	25HCC542A**30	CAP**4221A**	58CV(A,X)110−20	40,500	12.0	14.5	42,000	3.66	8.2	26,000	2.54
3675230	25HCC542A**30	CAP**4221A**	58ME(B,C)100−20	41,000	12.5	14.5	42,000	3.72	8.3	26,000	2.56
3675224	25HCC542A**30	CAP**4221A**	58MV(B,C)080−14	40,500	12.0	14.0	42,000	3.60	8.0	26,200	2.50
3675225	25HCC542A**30	CAP**4221A**	58MV(B,C)080−20	40,500	12.0	14.0	42,000	3.62	8.1	26,200	2.50
3675226	25HCC542A**30	CAP**4221A**	58MV(B,C)100−20	40,500	12.0	14.0	41,500	3.60	8.0	26,000	2.50
3675228	25HCC542A**30	CAP**4221A**	58PH*090−16	41,000	12.0	14.5	42,000	3.68	8.2	26,000	2.54
3675229	25HCC542A**30	CAP**4221A**	58PH*110−20	41,000	12.5	14.5	42,000	3.70	8.2	26,000	2.56
3675234	25HCC542A**30	CAP**4221A**	58UVB080−14	40,500	12.0	14.0	42,000	3.60	8.0	26,200	2.50
3675235	25HCC542A**30	CAP**4221A**	58UVB080−20	40,500	12.0	14.0	42,000	3.62	8.1	26,200	2.50
3675236	25HCC542A**30	CAP**4221A**	58UVB100−20	40,500	12.0	14.0	41,500	3.60	8.0	26,000	2.50
3675238	25HCC542A**30	CAP**4221A**+TDR		41,000	11.5	13.5	42,000	3.62	8.0	27,200	2.48
3675246	25HCC542A**30	CAP**4224A**	58CV(A,X)135−22	41,000	12.5	14.5	41,500	3.70	8.2	25,800	2.56
3675247	25HCC542A**30	CAP**4224A**	58CV(A,X)155−22	41,000	12.5	14.5	41,500	3.70	8.2	25,800	2.56
3675250	25HCC542A**30	CAP**4224A**	58HDV100−−20	41,000	12.0	14.5	42,000	3.68	8.2	26,200	2.54
3675249	25HCC542A**30	CAP**4224A**	58ME(B,C)120−20	41,000	12.5	15.0	42,000	3.76	8.3	26,000	2.58
3675245	25HCC542A**30	CAP**4224A**	58MV(B,C)120−20	40,500	12.0	14.5	41,500	3.66	8.1	26,000	2.54
3675244	25HCC542A**30	CAP**4224A**	58MVB040−14	40,500	12.0	14.0	42,000	3.60	8.0	26,200	2.50
3675248	25HCC542A**30	CAP**4224A**	58PH*135−20	41,000	12.0	14.5	42,000	3.70	8.2	26,200	2.56
3675252	25HCC542A**30	CAP**4224A**	58UVB120−20	40,500	12.0	14.5	41,500	3.66	8.1	26,000	2.54
3675254	25HCC542A**30	CAP**4224A**+TDR		41,000	11.5	13.5	42,000	3.62	8.0	27,200	2.48
3675256	25HCC542A**30	CAP**4817A**	58CV(A,X)090−16	41,500	12.5	14.5	42,000	3.80	8.3	26,400	2.60
3675259	25HCC542A**30	CAP**4817A**	58ME(B,C)060−12	42,000	12.5	14.5	42,000	3.84	8.4	26,800	2.60
3675260	25HCC542A**30	CAP**4817A**	58ME(B,C)080−12	42,000	12.5	14.5	42,000	3.84	8.4	26,600	2.60
3675261	25HCC542A**30	CAP**4817A**	58ME(B,C)080−16	41,500	12.5	14.5	42,000	3.82	8.4	26,400	2.60
3675258	25HCC542A**30	CAP**4817A**	58MEB040−12	42,000	12.5	14.5	42,000	3.84	8.4	26,600	2.60
3675255	25HCC542A**30	CAP**4817A**	58MV(B,C)060−14	42,000	12.5	14.5	42,000	3.82	8.4	26,600	2.60
3675257	25HCC542A**30	CAP**4817A**	58PH*070−16	41,500	12.0	14.0	42,000	3.74	8.2	27,000	2.54
3675264	25HCC542A**30	CAP**4817A**	58UVB060−14	42,000	12.5	14.5	42,000	3.82	8.4	26,600	2.60
3675265	25HCC542A**30	CAP**4817A**+TDR		42,000	11.5	13.5	42,000	3.78	8.2	27,600	2.54
3675270	25HCC542A**30	CAP**4821A**	58CV(A,X)110−20	41,500	12.5	14.5	42,000	3.78	8.5	26,200	2.58
3675273	25HCC542A**30	CAP**4821A**	58ME(B,C)100−20	41,500	12.5	15.0	42,000	3.82	8.4	26,200	2.60
3675267	25HCC542A**30	CAP**4821A**	58MV(B,C)080−14	41,000	12.0	14.0	42,000	3.70	8.2	26,600	2.54
3675268	25HCC542A**30	CAP**4821A**	58MV(B,C)080−20	41,500	12.0	14.5	42,000	3.74	8.2	26,400	2.56
3675269	25HCC542A**30	CAP**4821A**	58MV(B,C)100−20	41,000	12.0	14.5	42,000	3.70	8.2	26,200	2.54
3675271	25HCC542A**30	CAP**4821A**	58PH*090−16	41,500	12.5	14.5	42,000	3.80	8.4	26,200	2.60
3675272	25HCC542A**30	CAP**4821A**	58PH*110−20	41,500	12.5	15.0	42,000	3.82	8.4	26,200	2.60
3675280	25HCC542A**30	CAP**4821A**	58UVB080−14	41,000	12.0	14.0	42,000	3.70	8.2	26,600	2.54
3675281	25HCC542A**30	CAP**4821A**	58UVB080−20	41,500	12.0	14.5	42,000	3.74	8.2	26,400	2.56
3675282	25HCC542A**30	CAP**4821A**	58UVB100−20	41,000	12.0	14.5	42,000	3.70	8.2	26,200	2.54
3675285	25HCC542A**30	CAP**4821A**+TDR		41,500	11.5	13.5	42,000	3.74	8.2	27,400	2.52
3675287	25HCC542A**30	CAP**4823A**	58HDV080−−20	42,000	12.2	14.5	42,000	3.80	8.4	26,800	2.58
3675289	25HCC542A**30	CAP**4823A**+TDR		41,500	11.5	13.5	42,000	3.74	8.2	27,400	2.52
3675293	25HCC542A**30	CAP**4824A**	58CV(A,X)135−22	41,500	12.5	15.0	42,000	3.82	8.4	26,000	2.62
3675294	25HCC542A**30	CAP**4824A**	58CV(A,X)155−22	41,500	12.5	15.0	42,000	3.80	8.4	26,000	2.62
3675296	25HCC542A**30	CAP**4824A**	58ME(B,C)120−20	42,000	12.5	15.0	42,000	3.86	8.6	26,200	2.64
3675292	25HCC542A**30	CAP**4824A**	58MV(B,C)120−20	41,500	12.5	14.5	42,000	3.78	8.4	26,200	2.58
3675291	25HCC542A**30	CAP**4824A**	58MVB040−14	41,000	12.0	14.5	42,000	3.70	8.2	26,400	2.54
3675295	25HCC542A**30	CAP**4824A**	58PH*135−20	41,500	12.5	15.0	42,000	3.82	8.5	26,400	2.62
3675302	25HCC542A**30	CAP**4824A**	58UVB120−20	41,500	12.5	14.5	42,000	3.78	8.4	26,200	2.58
3675304	25HCC542A**30	CAP**4824A**+TDR		41,500	11.5	13.5	42,000	3.74	8.2	27,400	2.52
3675339	25HCC542A**30	CNPF*4818A**+TDR		41,500	11.5	13.5	42,000	3.68	8.1	27,400	2.50
3675514	25HCC542A**30	CNPH*4221A**	58CV(A,X)070−12	40,500	11.8	14.0	42,000	3.60	8.0	26,400	2.48
3675515	25HCC542A**30	CNPH*4221A**	58CV(A,X)090−16	40,500	12.0	14.5	42,000	3.64	8.1	26,000	2.52
3675516	25HCC542A**30	CNPH*4221A**	58CV(A,X)110−20	40,500	12.0	14.5	42,000	3.66	8.1	26,200	2.52
3675517	25HCC542A**30	CNPH*4221A**	58CV(A,X)135−22	41,000	12.0	14.5	42,000	3.68	8.2	26,000	2.54
3675518	25HCC542A**30	CNPH*4221A**	58CV(A,X)155−22	41,000	12.0	14.5	41,500	3.68	8.2	26,000	2.54
3675529	25HCC542A**30	CNPH*4221A**	58HDV080−−20	41,000	12.0	14.0	42,000	3.68	8.2	26,600	2.54
3675530	25HCC542A**30	CNPH*4221A**	58HDV100−−20	41,000	12.0	14.0	42,000	3.66	8.2	26,200	2.52
3675524	25HCC542A**30	CNPH*4221A**	58ME(B,C)060−12	41,000	12.0	14.0	42,000	3.66	8.2	26,400	2.52
3675525	25HCC542A**30	CNPH*4221A**	58ME(B,C)080−12	41,000	12.0	14.5	42,000	3.68	8.2	26,400	2.54
3675526	25HCC542A**30	CNPH*4221A**	58ME(B,C)080−16	41,000	12.0	14.0	42,000	3.64	8.2	26,200	2.52
3675527	25HCC542A**30	CNPH*4221A**	58ME(B,C)100−20	41,000	12.0	14.5	42,000	3.70	8.2	26,000	2.56
3675528	25HCC542A**30	CNPH*4221A**	58ME(B,C)120−20	41,000	12.5	14.5	42,000	3.72	8.3	26,000	2.56
3675523	25HCC542A**30	CNPH*4221A**	58MEB040−12	41,000	12.0	14.0	42,000	3.68	8.2	26,400	2.54
3675509	25HCC542A**30	CNPH*4221A**	58MV(B,C)060−14	41,000	12.0	14.0	42,000	3.66	8.1	26,400	2.52
3675510	25HCC542A**30	CNPH*4221A**	58MV(B,C)080−14	40,500	11.8	14.0	42,000	3.60	8.0	26,400	2.48
3675511	25HCC542A**30	CNPH*4221A**	58MV(B,C)080−20	40,500	12.0	14.0	42,000	3.62	8.1	26,400	2.50
3675512	25HCC542A**30	CNPH*4221A**	58MV(B,C)100−20	40,500	12.0	14.0	41,500	3.60	8.0	26,200	2.50
3675513	25HCC542A**30	CNPH*4221A**	58MV(B,C)120−20	40,500	12.0	14.5	41,500	3.64	8.1	26,000	2.52
3675508	25HCC542A**30	CNPH*4221A**	58MVB040−14	40,500	12.0	14.0	42,000	3.58	8.0	26,200	2.48
3675519	25HCC542A**30	CNPH*4221A**	58PH*070−16	40,500	11.5	13.5	42,000	3.58	8.0	26,800	2.48
3675520	25HCC542A**30	CNPH*4221A**	58PH*090−16	41,000	12.0	14.5	42,000	3.68	8.2	26,000	2.54
3675521	25HCC542A**30	CNPH*4221A**	58PH*110−20	41,000	12.0	14.5	42,000	3.68	8.2	26,000	2.54
3675522	25HCC542A**30	CNPH*4221A**	58PH*135−20	41,000	12.0	14.5	42,000	3.66	8.2	26,000	2.54
3675536	25HCC542A**30	CNPH*4221A**	58UVB060−14	41,000	12.0	14.0	42,000	3.66	8.1	26,400	2.52
3675537	25HCC542A**30	CNPH*4221A**	58UVB080−14	40,500	11.8	14.0	42,000	3.60	8.0	26,400	2.48

See notes on pg. 26

COMBINATION RATINGS CONTINUED

AHRI Ref. No.	Model Number	Coil Model Number	Furnace Model Number	Cooling Capacity	EER	SEER	High Temp		HSPF	Low Temp	
							E Capacity	E COP		H Capacity	H COP
3675538	25HCC542A**30	CNPH*4221A**	58UVB080−20	40,500	12.0	14.0	42,000	3.62	8.1	26,400	2.50
3675539	25HCC542A**30	CNPH*4221A**	58UVB100−20	40,500	12.0	14.0	41,500	3.60	8.0	26,200	2.50
3675540	25HCC542A**30	CNPH*4221A**	58UVB120−20	40,500	12.0	14.5	41,500	3.64	8.1	26,000	2.52
3675542	25HCC542A**30	CNPH*4221A**+TDR		41,000	11.5	13.5	42,000	3.62	8.0	27,200	2.48
3675547	25HCC542A**30	CNPH*4321A**	58HDV080−−20	42,000	12.5	15.0	42,000	3.92	8.5	27,000	2.64
3675548	25HCC542A**30	CNPH*4321A**	58HDV100−−20	42,000	12.5	15.0	42,000	3.90	8.6	26,600	2.64
3675555	25HCC542A**30	CNPH*4821A**	58CV(A,X)070−12	41,000	12.0	14.5	42,000	3.72	8.2	26,400	2.54
3675556	25HCC542A**30	CNPH*4821A**	58CV(A,X)090−16	41,500	12.0	14.5	42,000	3.78	8.4	26,200	2.58
3675557	25HCC542A**30	CNPH*4821A**	58CV(A,X)110−20	41,500	12.5	15.0	42,000	3.80	8.5	26,200	2.60
3675558	25HCC542A**30	CNPH*4821A**	58CV(A,X)135−22	41,500	12.5	15.0	42,000	3.82	8.4	26,000	2.62
3675559	25HCC542A**30	CNPH*4821A**	58CV(A,X)155−22	41,500	12.5	15.0	42,000	3.82	8.4	26,000	2.62
3675570	25HCC542A**30	CNPH*4821A**	58HDV080−−20	42,000	12.2	14.5	42,000	3.82	8.4	26,800	2.60
3675571	25HCC542A**30	CNPH*4821A**	58HDV100−−20	42,000	12.5	15.0	42,000	3.82	8.4	26,400	2.60
3675565	25HCC542A**30	CNPH*4821A**	58ME(B,C)060−12	42,000	12.0	14.5	42,000	3.82	8.3	26,600	2.60
3675566	25HCC542A**30	CNPH*4821A**	58ME(B,C)080−12	42,000	12.0	14.5	42,000	3.82	8.4	26,600	2.60
3675567	25HCC542A**30	CNPH*4821A**	58ME(B,C)080−16	41,500	12.0	14.5	42,000	3.80	8.3	26,400	2.60
3675568	25HCC542A**30	CNPH*4821A**	58ME(B,C)100−20	42,000	12.5	15.0	42,000	3.84	8.4	26,400	2.62
3675569	25HCC542A**30	CNPH*4821A**	58ME(B,C)120−20	42,000	12.5	15.0	42,000	3.88	8.6	26,200	2.64
3675564	25HCC542A**30	CNPH*4821A**	58MEB040−12	42,000	12.0	14.5	42,000	3.82	8.4	26,600	2.60
3675550	25HCC542A**30	CNPH*4821A**	58MV(B,C)060−14	41,500	12.5	14.5	42,000	3.80	8.3	26,400	2.60
3675551	25HCC542A**30	CNPH*4821A**	58MV(B,C)080−14	41,000	12.0	14.5	42,000	3.74	8.2	26,400	2.56
3675552	25HCC542A**30	CNPH*4821A**	58MV(B,C)080−20	41,500	12.0	14.5	42,000	3.76	8.2	26,400	2.56
3675553	25HCC542A**30	CNPH*4821A**	58MV(B,C)100−20	41,000	12.0	14.5	42,000	3.72	8.2	26,200	2.56
3675554	25HCC542A**30	CNPH*4821A**	58MV(B,C)120−20	41,500	12.5	14.5	42,000	3.78	8.4	26,200	2.60
3675549	25HCC542A**30	CNPH*4821A**	58MVB040−14	41,000	12.0	14.5	42,000	3.72	8.2	26,400	2.54
3675560	25HCC542A**30	CNPH*4821A**	58PH*070−16	41,500	12.0	14.0	42,000	3.72	8.1	27,000	2.54
3675561	25HCC542A**30	CNPH*4821A**	58PH*090−16	42,000	12.5	15.0	42,000	3.82	8.5	26,400	2.62
3675562	25HCC542A**30	CNPH*4821A**	58PH*110−20	42,000	12.5	15.0	42,000	3.84	8.4	26,200	2.62
3675563	25HCC542A**30	CNPH*4821A**	58PH*135−20	41,500	12.5	15.0	42,000	3.84	8.4	26,400	2.62
3675587	25HCC542A**30	CNPH*4821A**	58UVB060−14	41,500	12.5	14.5	42,000	3.80	8.3	26,400	2.60
3675588	25HCC542A**30	CNPH*4821A**	58UVB080−14	41,000	12.0	14.5	42,000	3.74	8.2	26,400	2.56
3675589	25HCC542A**30	CNPH*4821A**	58UVB080−20	41,500	12.0	14.5	42,000	3.76	8.2	26,400	2.56
3675590	25HCC542A**30	CNPH*4821A**	58UVB100−20	41,000	12.0	14.5	42,000	3.72	8.2	26,200	2.56
3675591	25HCC542A**30	CNPH*4821A**	58UVB120−20	41,500	12.5	14.5	42,000	3.78	8.4	26,200	2.60
3675595	25HCC542A**30	CNPH*4821A**+TDR		41,500	11.5	13.5	42,000	3.72	8.2	27,400	2.52
3675786	25HCC542A**30	CNPV*4217A**	58CV(A,X)090−16	41,000	12.0	14.5	42,000	3.70	8.2	26,200	2.56
3675789	25HCC542A**30	CNPV*4217A**	58ME(B,C)060−12	41,500	12.0	14.5	42,000	3.72	8.2	26,600	2.56
3675790	25HCC542A**30	CNPV*4217A**	58ME(B,C)080−12	41,500	12.0	14.5	42,000	3.72	8.3	26,400	2.56
3675791	25HCC542A**30	CNPV*4217A**	58ME(B,C)080−16	41,000	12.0	14.5	42,000	3.70	8.2	26,400	2.54
3675788	25HCC542A**30	CNPV*4217A**	58MEB040−12	41,500	12.0	14.5	42,000	3.72	8.2	26,400	2.56
3675785	25HCC542A**30	CNPV*4217A**	58MV(B,C)060−14	41,500	12.0	14.5	42,000	3.72	8.2	26,600	2.54
3675787	25HCC542A**30	CNPV*4217A**	58PH*070−16	41,000	11.5	13.5	42,000	3.64	8.0	26,800	2.50
3675793	25HCC542A**30	CNPV*4217A**	58UVB060−14	41,500	12.0	14.5	42,000	3.72	8.2	26,600	2.54
3675795	25HCC542A**30	CNPV*4217A**+TDR		41,500	11.5	13.5	42,000	3.68	8.1	27,400	2.50
3675806	25HCC542A**30	CNPV*4221A**	58CV(A,X)110−20	40,500	12.0	14.5	42,000	3.66	8.1	26,200	2.52
3675809	25HCC542A**30	CNPV*4221A**	58ME(B,C)100−20	41,000	12.0	14.5	42,000	3.70	8.2	26,000	2.56
3675803	25HCC542A**30	CNPV*4221A**	58MV(B,C)080−14	40,500	11.8	14.0	42,000	3.60	8.0	26,400	2.48
3675804	25HCC542A**30	CNPV*4221A**	58MV(B,C)080−20	40,500	12.0	14.0	42,000	3.62	8.1	26,400	2.50
3675805	25HCC542A**30	CNPV*4221A**	58MV(B,C)100−20	40,500	12.0	14.0	41,500	3.60	8.0	26,200	2.50
3675807	25HCC542A**30	CNPV*4221A**	58PH*090−16	41,000	12.0	14.5	42,000	3.68	8.2	26,000	2.54
3675808	25HCC542A**30	CNPV*4221A**	58PH*110−20	41,000	12.0	14.5	42,000	3.68	8.2	26,000	2.54
3675813	25HCC542A**30	CNPV*4221A**	58UVB080−14	40,500	11.8	14.0	42,000	3.60	8.0	26,400	2.48
3675814	25HCC542A**30	CNPV*4221A**	58UVB080−20	40,500	12.0	14.0	42,000	3.62	8.1	26,400	2.50
3675815	25HCC542A**30	CNPV*4221A**	58UVB100−20	40,500	12.0	14.0	41,500	3.60	8.0	26,200	2.50
3675817	25HCC542A**30	CNPV*4221A**+TDR		41,000	11.5	13.5	42,000	3.62	8.0	27,200	2.48
3675835	25HCC542A**30	CNPV*4324A**	58CV(A,X)110−20	42,000	12.5	15.0	42,000	3.90	8.6	26,200	2.64
3675828	25HCC542A**30	CNPV*4324A**	58CV(A,X)135−22	42,000	13.0	15.5	42,000	3.92	8.7	26,200	2.66
3675829	25HCC542A**30	CNPV*4324A**	58CV(A,X)155−22	42,000	13.0	15.5	42,000	3.92	8.7	26,200	2.66
3676315	25HCC542A**30	CNPV*4324A**	58HDV100−−20 (DNFLWONLY)	42,000	12.5	15.0	42,000	3.92	8.6	26,600	2.64
3675834	25HCC542A**30	CNPV*4324A**	58ME(B,C)100−20	42,000	12.5	15.0	42,000	3.96	8.7	26,400	2.68
3675831	25HCC542A**30	CNPV*4324A**	58ME(B,C)120−20	42,000	13.0	15.5	42,000	3.98	8.7	26,600	2.70
3675832	25HCC542A**30	CNPV*4324A**	58MV(B,C)080−20	42,000	12.5	15.0	42,000	3.86	8.5	26,600	2.62
3675833	25HCC542A**30	CNPV*4324A**	58MV(B,C)100−20	42,000	12.5	15.0	42,000	3.82	8.5	26,400	2.60
3675827	25HCC542A**30	CNPV*4324A**	58MV(B,C)120−20	42,000	12.5	15.0	42,000	3.88	8.5	26,400	2.64
3675826	25HCC542A**30	CNPV*4324A**	58MVB040−14	42,000	12.5	15.0	42,000	3.82	8.5	26,400	2.60
3675836	25HCC542A**30	CNPV*4324A**	58PH*110−20	42,000	13.0	15.5	42,000	3.96	8.7	26,400	2.68
3675830	25HCC542A**30	CNPV*4324A**	58PH*135−20	42,000	13.0	15.5	42,000	3.94	8.6	26,600	2.66
3675841	25HCC542A**30	CNPV*4324A**	58UVB080−20	42,000	12.5	15.0	42,000	3.86	8.5	26,600	2.62
3675842	25HCC542A**30	CNPV*4324A**	58UVB100−20	42,000	12.5	15.0	42,000	3.82	8.5	26,400	2.60
3675840	25HCC542A**30	CNPV*4324A**	58UVB120−20	42,000	12.5	15.0	42,000	3.88	8.5	26,400	2.64
3675825	25HCC542A**30	CNPV*4324A**		42,000	12.0	14.0	42,000	3.82	8.3	27,600	2.56
3675847	25HCC542A**30	CNPV*4821A**	58CV(A,X)110−20	41,500	12.5	15.0	42,000	3.80	8.5	26,200	2.60
3675850	25HCC542A**30	CNPV*4821A**	58ME(B,C)100−20	42,000	12.5	15.0	42,000	3.84	8.4	26,400	2.62
3675844	25HCC542A**30	CNPV*4821A**	58MV(B,C)080−14	41,000	12.0	14.5	42,000	3.74	8.2	26,400	2.56
3675845	25HCC542A**30	CNPV*4821A**	58MV(B,C)080−20	41,500	12.0	14.5	42,000	3.76	8.2	26,400	2.56
3675846	25HCC542A**30	CNPV*4821A**	58MV(B,C)100−20	41,000	12.0	14.5	42,000	3.72	8.2	26,200	2.56
3675848	25HCC542A**30	CNPV*4821A**	58PH*090−16	42,000	12.5	15.0	42,000	3.82	8.4	26,400	2.62
3675849	25HCC542A**30	CNPV*4821A**	58PH*110−20	42,000	12.5	15.0	42,000	3.84	8.4	26,200	2.62
3675858	25HCC542A**30	CNPV*4821A**	58UVB080−14	41,000	12.0	14.5	42,000	3.74	8.2	26,400	2.56
3675859	25HCC542A**30	CNPV*4821A**	58UVB080−20	41,500	12.0	14.5	42,000	3.76	8.2	26,400	2.56
3675860	25HCC542A**30	CNPV*4821A**	58UVB100−20	41,000	12.0	14.5	42,000	3.72	8.2	26,200	2.56
3675863	25HCC542A**30	CNPV*4821A**+TDR		41,500	11.5	13.5	42,000	3.72	8.2	27,400	2.52
3675867	25HCC542A**30	CNPV*4824A**	58CV(A,X)135−22	41,500	12.5	15.0	42,000	3.82	8.4	26,000	2.62
3675868	25HCC542A**30	CNPV*4824A**	58CV(A,X)155−22	41,500	12.5	15.0	42,000	3.82	8.4	26,000	2.62
3676316	25HCC542A**30	CNPV*4824A**	58HDV100−−20 (DNFLWONLY)	42,000	12.5	15.0	42,000	3.82	8.4	26,400	2.60

See notes on pg. 26

COMBINATION RATINGS CONTINUED

AHRI Ref. No.	Model Number	Coil Model Number	Furnace Model Number	Cooling Capacity	EER	SEER	High Temp		HSPF	Low Temp	
							E Capacity	E COP		H Capacity	H COP
3675870	25HCC542A**30	CNPV*4824A**	58ME(B,C)120−20	42,000	12.5	15.0	42,000	3.88	8.6	26,200	2.64
3675866	25HCC542A**30	CNPV*4824A**	58MV(B,C)120−20	41,500	12.5	14.5	42,000	3.78	8.4	26,200	2.60
3675865	25HCC542A**30	CNPV*4824A**	58MVB040−14	41,000	12.0	14.5	42,000	3.72	8.2	26,400	2.54
3675869	25HCC542A**30	CNPV*4824A**	58PH*135−20	41,500	12.5	15.0	42,000	3.84	8.5	26,400	2.62
3675876	25HCC542A**30	CNPV*4824A**	58UVB120−20	41,500	12.5	14.5	42,000	3.78	8.4	26,200	2.60
3675878	25HCC542A**30	CNPV*4824A**+TDR		41,500	11.5	13.5	42,000	3.72	8.2	27,400	2.52
3676080	25HCC542A**30	CSPH*4212A**	58CV(A,X)070−12	41,000	12.0	14.0	42,000	3.72	8.1	26,600	2.54
3676081	25HCC542A**30	CSPH*4212A**	58CV(A,X)090−16	41,500	12.0	14.5	42,000	3.78	8.2	26,200	2.58
3676082	25HCC542A**30	CSPH*4212A**	58CV(A,X)110−20	40,500	12.0	14.5	42,000	3.78	8.2	26,400	2.58
3676083	25HCC542A**30	CSPH*4212A**	58CV(A,X)135−22	41,500	12.0	14.5	42,000	3.82	8.2	26,200	2.62
3676084	25HCC542A**30	CSPH*4212A**	58CV(A,X)155−22	41,500	12.0	14.5	41,500	3.80	8.2	26,200	2.62
3676095	25HCC542A**30	CSPH*4212A**	58HDV080−−20	41,000	12.0	14.0	42,000	3.82	8.2	26,800	2.58
3676096	25HCC542A**30	CSPH*4212A**	58HDV100−−20	41,000	12.0	14.0	42,000	3.80	8.2	26,400	2.60
3676090	25HCC542A**30	CSPH*4212A**	58ME(B,C)060−12	41,500	12.0	14.5	42,000	3.80	8.2	26,600	2.58
3676091	25HCC542A**30	CSPH*4212A**	58ME(B,C)080−12	41,500	12.0	14.5	42,000	3.80	8.3	26,600	2.60
3676092	25HCC542A**30	CSPH*4212A**	58ME(B,C)080−16	41,500	12.0	14.5	42,000	3.78	8.2	26,400	2.58
3676093	25HCC542A**30	CSPH*4212A**	58ME(B,C)100−20	41,500	12.0	14.5	42,000	3.82	8.3	26,400	2.62
3676094	25HCC542A**30	CSPH*4212A**	58ME(B,C)120−20	41,000	12.5	15.0	42,000	3.86	8.3	26,200	2.64
3676089	25HCC542A**30	CSPH*4212A**	58MEB040−12	41,500	12.0	14.5	42,000	3.80	8.3	26,600	2.60
3676075	25HCC542A**30	CSPH*4212A**	58MV(B,C)060−14	41,500	12.0	14.5	42,000	3.78	8.2	26,600	2.58
3676076	25HCC542A**30	CSPH*4212A**	58MV(B,C)080−14	41,000	12.0	14.0	42,000	3.72	8.0	26,600	2.54
3676077	25HCC542A**30	CSPH*4212A**	58MV(B,C)080−20	41,500	12.0	14.0	42,000	3.74	8.1	26,600	2.56
3676078	25HCC542A**30	CSPH*4212A**	58MV(B,C)100−20	41,000	12.0	14.0	41,500	3.72	8.0	26,200	2.56
3676079	25HCC542A**30	CSPH*4212A**	58MV(B,C)120−20	40,500	12.0	14.5	41,500	3.78	8.1	26,200	2.58
3676074	25HCC542A**30	CSPH*4212A**	58MVB040−14	41,000	12.0	14.0	42,000	3.70	8.0	26,400	2.54
3676085	25HCC542A**30	CSPH*4212A**	58PH*070−16	41,000	11.5	13.5	42,000	3.72	8.1	27,000	2.52
3676086	25HCC542A**30	CSPH*4212A**	58PH*090−16	41,500	12.0	14.5	42,000	3.80	8.3	26,400	2.60
3676087	25HCC542A**30	CSPH*4212A**	58PH*110−20	41,500	12.0	14.5	42,000	3.82	8.2	26,200	2.62
3676088	25HCC542A**30	CSPH*4212A**	58PH*135−20	41,500	12.0	14.5	42,000	3.80	8.2	26,400	2.60
3676102	25HCC542A**30	CSPH*4212A**	58UVB060−14	41,500	12.0	14.5	42,000	3.78	8.2	26,600	2.58
3676103	25HCC542A**30	CSPH*4212A**	58UVB080−14	41,000	12.0	14.0	42,000	3.72	8.0	26,600	2.54
3676104	25HCC542A**30	CSPH*4212A**	58UVB080−20	41,500	12.0	14.0	42,000	3.74	8.1	26,600	2.56
3676105	25HCC542A**30	CSPH*4212A**	58UVB100−20	41,000	12.0	14.0	41,500	3.72	8.0	26,200	2.56
3676106	25HCC542A**30	CSPH*4212A**	58UVB120−20	40,500	12.0	14.5	41,500	3.78	8.1	26,200	2.58
3676108	25HCC542A**30	CSPH*4212A**+TDR		41,000	11.5	13.5	42,000	3.74	8.0	27,400	2.54
3676115	25HCC542A**30	CSPH*4812A**	58CV(A,X)070−12	41,500	12.0	14.5	42,000	3.74	8.2	26,600	2.56
3676116	25HCC542A**30	CSPH*4812A**	58CV(A,X)090−16	41,500	12.5	15.0	42,000	3.80	8.4	26,400	2.60
3676117	25HCC542A**30	CSPH*4812A**	58CV(A,X)110−20	41,500	12.5	15.0	42,000	3.82	8.5	26,400	2.60
3676118	25HCC542A**30	CSPH*4812A**	58CV(A,X)135−22	42,000	12.5	15.0	42,000	3.84	8.4	26,200	2.62
3676119	25HCC542A**30	CSPH*4812A**	58CV(A,X)155−22	42,000	12.5	15.0	42,000	3.84	8.4	26,200	2.62
3676130	25HCC542A**30	CSPH*4812A**	58HDV080−−20	42,000	12.2	14.5	42,000	3.84	8.4	26,800	2.60
3676131	25HCC542A**30	CSPH*4812A**	58HDV100−−20	42,000	12.5	15.0	42,000	3.82	8.4	26,600	2.60
3676125	25HCC542A**30	CSPH*4812A**	58ME(B,C)060−12	42,000	12.5	14.5	42,000	3.82	8.3	26,600	2.60
3676126	25HCC542A**30	CSPH*4812A**	58ME(B,C)080−12	42,000	12.5	15.0	42,000	3.84	8.4	26,600	2.60
3676127	25HCC542A**30	CSPH*4812A**	58ME(B,C)080−16	41,500	12.5	14.5	42,000	3.82	8.3	26,400	2.60
3676128	25HCC542A**30	CSPH*4812A**	58ME(B,C)100−20	42,000	12.5	15.0	42,000	3.86	8.4	26,400	2.62
3676129	25HCC542A**30	CSPH*4812A**	58ME(B,C)120−20	42,000	12.5	15.0	42,000	3.88	8.5	26,400	2.64
3676124	25HCC542A**30	CSPH*4812A**	58MEB040−12	42,000	12.5	14.5	42,000	3.84	8.4	26,600	2.60
3676110	25HCC542A**30	CSPH*4812A**	58MV(B,C)060−14	42,000	12.5	14.5	42,000	3.82	8.3	26,600	2.60
3676111	25HCC542A**30	CSPH*4812A**	58MV(B,C)080−14	41,000	12.0	14.5	42,000	3.74	8.2	26,600	2.56
3676112	25HCC542A**30	CSPH*4812A**	58MV(B,C)080−20	41,500	12.5	14.5	42,000	3.78	8.2	26,600	2.58
3676113	25HCC542A**30	CSPH*4812A**	58MV(B,C)100−20	41,500	12.0	14.5	42,000	3.74	8.2	26,400	2.56
3676114	25HCC542A**30	CSPH*4812A**	58MV(B,C)120−20	41,500	12.5	15.0	42,000	3.80	8.4	26,400	2.60
3676109	25HCC542A**30	CSPH*4812A**	58MVB040−14	41,000	12.0	14.5	42,000	3.74	8.2	26,400	2.56
3676120	25HCC542A**30	CSPH*4812A**	58PH*070−16	41,500	12.0	14.0	42,000	3.74	8.1	27,000	2.54
3676121	25HCC542A**30	CSPH*4812A**	58PH*090−16	42,000	12.5	15.0	42,000	3.84	8.4	26,400	2.62
3676122	25HCC542A**30	CSPH*4812A**	58PH*110−20	42,000	12.5	15.0	42,000	3.84	8.4	26,200	2.62
3676123	25HCC542A**30	CSPH*4812A**	58PH*135−20	41,500	12.5	15.0	42,000	3.84	8.4	26,400	2.62
3676147	25HCC542A**30	CSPH*4812A**	58UVB060−14	42,000	12.5	14.5	42,000	3.82	8.3	26,600	2.60
3676148	25HCC542A**30	CSPH*4812A**	58UVB080−14	41,000	12.0	14.5	42,000	3.74	8.2	26,600	2.56
3676149	25HCC542A**30	CSPH*4812A**	58UVB080−20	41,500	12.5	14.5	42,000	3.78	8.2	26,600	2.58
3676150	25HCC542A**30	CSPH*4812A**	58UVB100−20	41,500	12.0	14.5	42,000	3.74	8.2	26,400	2.56
3676151	25HCC542A**30	CSPH*4812A**	58UVB120−20	41,500	12.5	15.0	42,000	3.80	8.4	26,400	2.60
3676155	25HCC542A**30	CSPH*4812A**+TDR		41,500	11.5	13.5	42,000	3.78	8.2	27,600	2.54
3676272	25HCC548A**30	†FX4DN(B,F)049		47,500	12.5	15.0	46,500	3.84	8.7	28,000	2.66
3676196	25HCC548A**30	FE4AN(B,F)005+UI		46,500	12.5	15.0	45,000	3.78	8.5	27,400	2.64
3676199	25HCC548A**30	FE4ANB006+UI		47,000	12.5	15.5	45,500	3.90	9.0	27,400	2.70
3676227	25HCC548A**30	FV4BN(B,F)005		46,500	12.5	15.0	45,000	3.78	8.5	27,400	2.64
3676230	25HCC548A**30	FV4BNB006		47,000	12.5	15.5	45,500	3.90	9.0	27,400	2.70
3676243	25HCC548A**30	FV4CN(B,F)005		46,500	12.5	15.0	45,000	3.78	8.5	27,400	2.64
3676246	25HCC548A**30	FV4CNB006		47,000	12.5	15.5	45,500	3.90	9.0	27,400	2.70
3676257	25HCC548A**30	FX4CN(B,F)048		47,000	12.0	14.5	46,000	3.80	8.5	28,200	2.62
3676258	25HCC548A**30	FX4CN(B,F)060		47,500	12.5	15.0	46,500	3.92	8.8	28,200	2.68
3676273	25HCC548A**30	FX4DN(B,F)061		48,000	12.5	15.0	46,000	3.96	9.0	28,000	2.70
3676278	25HCC548A**30	FY4ANB060		47,000	11.5	13.5	47,000	3.72	8.3	29,000	2.56
3676290	25HCC548A**30	FY4ANF048		46,000	11.2	13.5	46,500	3.64	8.3	28,800	2.52
3676291	25HCC548A**30	FY5BNB060		47,500	11.5	13.5	48,000	3.72	8.4	29,000	2.56
3675262	25HCC548A**30	CAP**4817A**	58CV(A,X)090−16	45,500	11.5	14.0	45,500	3.68	8.3	27,800	2.56
3675263	25HCC548A**30	CAP**4817A**	58ME(B,C)080−16	45,500	11.5	14.0	46,000	3.70	8.3	28,000	2.56
3675266	25HCC548A**30	CAP**4817A**+TDR		45,000	11.5	13.5	46,000	3.66	8.3	28,200	2.54
3675276	25HCC548A**30	CAP**4821A**	58CV(A,X)110−20	45,000	11.5	14.0	45,000	3.66	8.3	27,600	2.56
3675279	25HCC548A**30	CAP**4821A**	58ME(B,C)100−20	45,500	12.0	14.0	45,000	3.70	8.3	27,600	2.58
3675274	25HCC548A**30	CAP**4821A**	58MV(B,C)080−20	44,500	11.5	14.0	45,000	3.60	8.3	27,600	2.54
3675275	25HCC548A**30	CAP**4821A**	58MV(B,C)100−20	45,000	11.5	13.5	45,500	3.64	8.3	27,800	2.54
3675277	25HCC548A**30	CAP**4821A**	58PH*090−16	45,500	12.0	14.0	45,500	3.68	8.3	27,600	2.58
3675278	25HCC548A**30	CAP**4821A**	58PH*110−20	45,000	12.0	14.5	45,000	3.70	8.3	27,400	2.60

See notes on pg. 26

COMBINATION RATINGS CONTINUED

AHRI Ref. No.	Model Number	Coil Model Number	Furnace Model Number	Cooling Capacity	EER	SEER	High Temp		HSPF	Low Temp	
							E Capacity	E COP		H Capacity	H COP
3675283	25HCC548A**30	CAP**4821A**	58UVB080−20	44,500	11.5	14.0	45,000	3.60	8.3	27,600	2.54
3675284	25HCC548A**30	CAP**4821A**	58UVB100−20	45,000	11.5	13.5	45,500	3.64	8.3	27,800	2.54
3675286	25HCC548A**30	CAP**4821A**+TDR		45,500	11.5	13.5	46,500	3.68	8.3	28,600	2.54
3675288	25HCC548A**30	CAP**4823A**	58HDV080−−20	45,500	11.5	13.5	46,000	3.66	8.3	28,200	2.54
3675290	25HCC548A**30	CAP**4823A**+TDR		45,500	11.5	13.5	46,500	3.68	8.3	28,600	2.54
3675298	25HCC548A**30	CAP**4824A**	58CV(A,X)135−22	45,500	12.0	14.5	45,000	3.70	8.3	27,400	2.60
3675299	25HCC548A**30	CAP**4824A**	58CV(A,X)155−22	45,500	12.0	14.5	45,000	3.74	8.3	27,200	2.62
3675301	25HCC548A**30	CAP**4824A**	58ME(B,C)120−20	45,500	12.0	14.5	45,000	3.76	8.5	27,600	2.62
3675297	25HCC548A**30	CAP**4824A**	58MV(B,C)120−20	45,000	12.0	14.0	45,000	3.68	8.3	27,600	2.56
3675300	25HCC548A**30	CAP**4824A**	58PH*135−20	45,500	12.0	14.0	45,500	3.72	8.5	27,600	2.60
3675303	25HCC548A**30	CAP**4824A**	58UVB120−20	45,000	12.0	14.0	45,000	3.68	8.3	27,600	2.56
3675305	25HCC548A**30	CAP**4824A**+TDR		45,500	11.5	13.5	46,500	3.68	8.3	28,600	2.54
3675308	25HCC548A**30	CAP**6021A**	58CV(A,X)110−20	46,000	12.0	14.5	45,500	3.72	8.5	27,600	2.60
3675311	25HCC548A**30	CAP**6021A**	58ME(B,C)100−20	46,500	12.0	14.5	45,500	3.78	8.5	27,600	2.64
3675306	25HCC548A**30	CAP**6021A**	58MV(B,C)080−20	45,500	12.0	14.0	45,500	3.66	8.3	27,600	2.58
3675307	25HCC548A**30	CAP**6021A**	58MV(B,C)100−20	46,000	12.0	14.0	45,500	3.70	8.5	28,000	2.58
3675309	25HCC548A**30	CAP**6021A**	58PH*090−16	46,500	12.0	14.5	45,500	3.76	8.5	27,800	2.62
3675310	25HCC548A**30	CAP**6021A**	58PH*110−20	46,500	12.5	14.5	45,000	3.78	8.5	27,600	2.64
3675315	25HCC548A**30	CAP**6021A**	58UVB080−20	45,500	12.0	14.0	45,500	3.66	8.3	27,600	2.58
3675316	25HCC548A**30	CAP**6021A**	58UVB100−20	46,000	12.0	14.0	45,500	3.70	8.5	28,000	2.58
3675317	25HCC548A**30	CAP**6021A**+TDR		46,500	11.5	13.5	46,500	3.74	8.3	28,800	2.58
3675320	25HCC548A**30	CAP**6024A**	58CV(A,X)135−22	46,000	12.0	14.5	45,000	3.76	8.5	27,600	2.64
3675321	25HCC548A**30	CAP**6024A**	58CV(A,X)155−22	46,500	12.5	15.0	45,000	3.80	8.5	27,400	2.66
3675323	25HCC548A**30	CAP**6024A**	58ME(B,C)120−20	46,500	12.0	14.5	45,500	3.82	8.5	27,600	2.66
3675319	25HCC548A**30	CAP**6024A**	58MV(B,C)120−20	46,000	12.0	14.5	45,500	3.72	8.5	27,800	2.60
3675322	25HCC548A**30	CAP**6024A**	58PH*135−20	46,500	12.0	14.5	45,500	3.76	8.5	27,800	2.62
3675328	25HCC548A**30	CAP**6024A**	58UVB120−20	46,000	12.0	14.5	45,500	3.72	8.5	27,800	2.60
3675329	25HCC548A**30	CAP**6024A**+TDR		46,500	11.5	13.5	46,500	3.74	8.3	28,800	2.58
3675331	25HCC548A**30	CAP**6025A**	58HDV100−−20	46,500	12.0	14.0	45,500	3.74	8.5	28,000	2.60
3675333	25HCC548A**30	CAP**6025A**+TDR		46,500	11.5	13.5	46,500	3.74	8.3	28,800	2.58
3675340	25HCC548A**30	CNPF*4818A**+TDR		44,500	11.5	13.5	45,500	3.56	8.2	28,000	2.50
3675575	25HCC548A**30	CNPH*4821A**	58CV(A,X)090−16	45,000	12.0	14.0	45,000	3.66	8.3	27,600	2.56
3675576	25HCC548A**30	CNPH*4821A**	58CV(A,X)110−20	45,500	12.0	14.0	45,000	3.68	8.3	27,400	2.58
3675577	25HCC548A**30	CNPH*4821A**	58CV(A,X)135−22	45,500	12.0	14.5	45,000	3.72	8.3	27,400	2.60
3675578	25HCC548A**30	CNPH*4821A**	58CV(A,X)155−22	45,500	12.0	14.5	45,000	3.74	8.3	27,200	2.62
3675585	25HCC548A**30	CNPH*4821A**	58HDV080−−20	45,500	11.5	13.5	46,000	3.70	8.3	28,200	2.56
3675586	25HCC548A**30	CNPH*4821A**	58HDV100−−20	46,000	12.0	14.0	46,000	3.68	8.3	27,800	2.58
3675582	25HCC548A**30	CNPH*4821A**	58ME(B,C)080−16	45,500	11.5	14.0	45,500	3.68	8.3	28,000	2.56
3675583	25HCC548A**30	CNPH*4821A**	58ME(B,C)100−20	45,500	12.0	14.5	45,000	3.74	8.3	27,600	2.60
3675584	25HCC548A**30	CNPH*4821A**	58ME(B,C)120−20	46,000	12.0	14.5	45,000	3.76	8.5	27,600	2.62
3675572	25HCC548A**30	CNPH*4821A**	58MV(B,C)080−20	45,000	11.5	14.0	45,000	3.62	8.3	27,600	2.54
3675573	25HCC548A**30	CNPH*4821A**	58MV(B,C)100−20	45,500	11.5	13.5	45,500	3.66	8.3	27,800	2.56
3675574	25HCC548A**30	CNPH*4821A**	58MV(B,C)120−20	45,500	12.0	14.0	45,000	3.68	8.3	27,600	2.58
3675579	25HCC548A**30	CNPH*4821A**	58PH*090−16	45,500	12.0	14.0	45,500	3.72	8.3	27,800	2.58
3675580	25HCC548A**30	CNPH*4821A**	58PH*110−20	45,500	12.0	14.5	45,000	3.74	8.3	27,400	2.62
3675581	25HCC548A**30	CNPH*4821A**	58PH*135−20	45,500	12.0	14.0	45,000	3.72	8.5	27,600	2.60
3675592	25HCC548A**30	CNPH*4821A**	58UVB080−20	45,000	11.5	14.0	45,000	3.62	8.3	27,600	2.54
3675593	25HCC548A**30	CNPH*4821A**	58UVB100−20	45,500	11.5	13.5	45,500	3.66	8.3	27,800	2.56
3675594	25HCC548A**30	CNPH*4821A**	58UVB120−20	45,500	12.0	14.0	45,000	3.68	8.3	27,600	2.58
3675596	25HCC548A**30	CNPH*4821A**+TDR		45,500	11.5	13.5	46,500	3.68	8.3	28,600	2.54
3675600	25HCC548A**30	CNPH*6024A**	58CV(A,X)090−16	46,000	12.0	14.5	45,000	3.72	8.5	27,600	2.60
3675601	25HCC548A**30	CNPH*6024A**	58CV(A,X)110−20	46,000	12.0	14.5	45,000	3.74	8.5	27,600	2.62
3675602	25HCC548A**30	CNPH*6024A**	58CV(A,X)135−22	46,000	12.5	14.5	45,000	3.76	8.5	27,400	2.64
3675603	25HCC548A**30	CNPH*6024A**	58CV(A,X)155−22	46,500	12.5	15.0	45,000	3.80	8.5	27,400	2.66
3675610	25HCC548A**30	CNPH*6024A**	58HDV080−−20	47,000	12.0	14.0	46,500	3.74	8.4	28,200	2.60
3675611	25HCC548A**30	CNPH*6024A**	58HDV100−−20	46,500	12.0	14.0	45,500	3.74	8.4	28,000	2.60
3675607	25HCC548A**30	CNPH*6024A**	58ME(B,C)080−16	46,500	12.0	14.0	46,000	3.72	8.5	28,000	2.60
3675608	25HCC548A**30	CNPH*6024A**	58ME(B,C)100−20	46,500	12.0	14.5	45,500	3.78	8.5	27,600	2.64
3675609	25HCC548A**30	CNPH*6024A**	58ME(B,C)120−20	46,500	12.0	14.5	45,500	3.82	8.5	27,600	2.66
3675597	25HCC548A**30	CNPH*6024A**	58MV(B,C)080−20	45,500	12.0	14.0	45,000	3.68	8.3	27,600	2.58
3675598	25HCC548A**30	CNPH*6024A**	58MV(B,C)100−20	46,000	12.0	14.0	45,500	3.70	8.5	28,000	2.58
3675599	25HCC548A**30	CNPH*6024A**	58MV(B,C)120−20	46,000	12.0	14.5	45,500	3.72	8.5	27,600	2.60
3675604	25HCC548A**30	CNPH*6024A**	58PH*090−16	46,500	12.0	14.5	45,500	3.76	8.5	27,800	2.62
3675605	25HCC548A**30	CNPH*6024A**	58PH*110−20	46,500	12.5	15.0	45,000	3.80	8.5	27,600	2.64
3675606	25HCC548A**30	CNPH*6024A**	58PH*135−20	46,500	12.0	14.5	45,500	3.78	8.5	27,800	2.64
3675622	25HCC548A**30	CNPH*6024A**	58UVB080−20	45,500	12.0	14.0	45,000	3.68	8.3	27,600	2.58
3675623	25HCC548A**30	CNPH*6024A**	58UVB100−20	46,000	12.0	14.0	45,500	3.70	8.5	28,000	2.58
3675624	25HCC548A**30	CNPH*6024A**	58UVB120−20	46,000	12.0	14.5	45,500	3.72	8.5	27,600	2.60
3675625	25HCC548A**30	CNPH*6024A**+TDR		46,500	11.5	13.5	46,500	3.72	8.3	28,600	2.56
3675630	25HCC548A**30	CNPH*6124A**	58CV(A,X)090−16	46,000	12.0	14.5	45,500	3.74	8.5	27,800	2.60
3675631	25HCC548A**30	CNPH*6124A**	58CV(A,X)110−20	46,500	12.0	14.5	45,500	3.76	8.5	27,800	2.62
3675632	25HCC548A**30	CNPH*6124A**	58CV(A,X)135−22	46,500	12.5	14.5	45,500	3.80	8.5	27,600	2.64
3675633	25HCC548A**30	CNPH*6124A**	58CV(A,X)155−22	46,500	12.5	15.0	45,500	3.82	8.7	27,600	2.66
3675640	25HCC548A**30	CNPH*6124A**	58HDV080−−20	47,000	12.0	14.0	46,500	3.78	8.5	28,400	2.60
3675641	25HCC548A**30	CNPH*6124A**	58HDV100−−20	47,000	12.2	14.5	46,500	3.76	8.5	28,000	2.60
3675637	25HCC548A**30	CNPH*6124A**	58ME(B,C)080−16	46,500	12.0	14.0	46,000	3.76	8.5	28,200	2.60
3675638	25HCC548A**30	CNPH*6124A**	58ME(B,C)100−20	46,500	12.0	14.5	45,500	3.82	8.7	27,800	2.64
3675639	25HCC548A**30	CNPH*6124A**	58ME(B,C)120−20	47,000	12.5	15.0	45,500	3.84	8.7	27,800	2.66
3675627	25HCC548A**30	CNPH*6124A**	58MV(B,C)080−20	46,000	12.0	14.0	45,500	3.70	8.3	27,800	2.58
3675628	25HCC548A**30	CNPH*6124A**	58MV(B,C)100−20	46,500	12.0	14.0	46,000	3.74	8.5	28,000	2.60
3675629	25HCC548A**30	CNPH*6124A**	58MV(B,C)120−20	46,500	12.0	14.5	45,500	3.76	8.5	27,800	2.62
3675634	25HCC548A**30	CNPH*6124A**	58PH*090−16	46,500	12.0	14.5	46,000	3.80	8.5	27,800	2.62
3675635	25HCC548A**30	CNPH*6124A**	58PH*110−20	46,500	12.5	14.5	45,500	3.82	8.7	27,600	2.66
3675636	25HCC548A**30	CNPH*6124A**	58PH*135−20	46,500	12.0	14.5	45,500	3.80	8.5	27,800	2.64
3675652	25HCC548A**30	CNPH*6124A**	58UVB080−20	46,000	12.0	14.0	45,500	3.70	8.3	27,800	2.58
3675653	25HCC548A**30	CNPH*6124A**	58UVB100−20	46,500	12.0	14.0	46,000	3.74	8.5	28,000	2.60
3675654	25HCC548A**30	CNPH*6124A**	58UVB120−20	46,500	12.0	14.5	45,500	3.76	8.5	27,800	2.62

See notes on pg. 26

COMBINATION RATINGS CONTINUED

AHRI Ref. No.	Model Number	Coil Model Number	Furnace Model Number	Cooling Capacity	EER	SEER	High Temp		HSPF	Low Temp	
							E Capacity	E COP		H Capacity	H COP
3675655	25HCC548A**30	CNPH*6124A**+TDR		47,000	11.5	14.0	47,000	3.76	8.5	28,800	2.58
3675853	25HCC548A**30	CNPV*4821A**	58CV(A,X)110−20	45,500	12.0	14.0	45,000	3.68	8.3	27,400	2.58
3675856	25HCC548A**30	CNPV*4821A**	58ME(B,C)100−20	45,500	12.0	14.5	45,000	3.74	8.3	27,600	2.60
3675851	25HCC548A**30	CNPV*4821A**	58MV(B,C)080−20	45,000	11.5	14.0	45,000	3.62	8.3	27,600	2.54
3675852	25HCC548A**30	CNPV*4821A**	58MV(B,C)100−20	45,500	11.5	13.5	45,500	3.66	8.3	27,800	2.56
3675854	25HCC548A**30	CNPV*4821A**	58PH*090−16	45,500	12.0	14.0	45,500	3.72	8.3	27,800	2.58
3675855	25HCC548A**30	CNPV*4821A**	58PH*110−20	45,500	12.0	14.5	45,000	3.74	8.3	27,400	2.62
3675861	25HCC548A**30	CNPV*4821A**	58UVB080−20	45,000	11.5	14.0	45,000	3.62	8.3	27,600	2.54
3675862	25HCC548A**30	CNPV*4821A**	58UVB100−20	45,500	11.5	13.5	45,500	3.66	8.3	27,800	2.56
3675864	25HCC548A**30	CNPV*4821A**+TDR		45,500	11.5	13.5	46,500	3.68	8.3	28,600	2.54
3675872	25HCC548A**30	CNPV*4824A**	58CV(A,X)135−22	45,500	12.0	14.5	45,000	3.72	8.3	27,400	2.60
3675873	25HCC548A**30	CNPV*4824A**	58CV(A,X)155−22	45,500	12.0	14.5	45,000	3.74	8.3	27,200	2.62
3676317	25HCC548A**30	CNPV*4824A**	58HDV100−−20 (DNFLWONLY)	46,000	12.0	14.0	46,000	3.68	8.3	27,800	2.58
3675875	25HCC548A**30	CNPV*4824A**	58ME(B,C)120−20	46,000	12.0	14.5	45,000	3.76	8.5	27,600	2.62
3675871	25HCC548A**30	CNPV*4824A**	58MV(B,C)120−20	45,500	12.0	14.0	45,000	3.68	8.3	27,600	2.58
3675874	25HCC548A**30	CNPV*4824A**	58PH*135−20	45,500	12.0	14.0	45,000	3.72	8.5	27,600	2.60
3675877	25HCC548A**30	CNPV*4824A**	58UVB120−20	45,500	12.0	14.0	45,000	3.68	8.3	27,600	2.58
3675879	25HCC548A**30	CNPV*4824A**+TDR		45,500	11.5	13.5	46,500	3.68	8.3	28,600	2.54
3675882	25HCC548A**30	CNPV*6024A**	58CV(A,X)135−22	46,000	12.5	14.5	45,000	3.76	8.5	27,400	2.64
3675883	25HCC548A**30	CNPV*6024A**	58CV(A,X)155−22	46,500	12.5	15.0	45,000	3.80	8.5	27,400	2.66
3676318	25HCC548A**30	CNPV*6024A**	58HDV100−−20 (DNFLWONLY)	46,500	12.0	14.0	45,500	3.74	8.4	28,000	2.60
3675885	25HCC548A**30	CNPV*6024A**	58ME(B,C)120−20	46,500	12.0	14.5	45,500	3.82	8.5	27,600	2.66
3675881	25HCC548A**30	CNPV*6024A**	58MV(B,C)120−20	46,000	12.0	14.5	45,500	3.72	8.5	27,600	2.60
3675884	25HCC548A**30	CNPV*6024A**	58PH*135−20	46,500	12.0	14.5	45,500	3.78	8.5	27,800	2.64
3675891	25HCC548A**30	CNPV*6024A**	58UVB120−20	46,000	12.0	14.5	45,500	3.72	8.5	27,600	2.60
3675892	25HCC548A**30	CNPV*6024A**+TDR		46,500	11.5	13.5	46,500	3.72	8.3	28,600	2.56
3675900	25HCC548A**30	CNPV*6124A**	58CV(A,X)110−20	47,000	12.5	15.0	46,000	3.82	8.6	27,600	2.64
3675895	25HCC548A**30	CNPV*6124A**	58CV(A,X)135−22	47,000	12.5	15.0	45,500	3.86	8.7	27,600	2.68
3675896	25HCC548A**30	CNPV*6124A**	58CV(A,X)155−22	47,000	12.5	15.0	45,500	3.88	8.7	27,600	2.70
3676320	25HCC548A**30	CNPV*6124A**	58HDV100−−20 (DNFLWONLY)	47,500	12.2	14.5	46,500	3.82	8.5	28,000	2.64
3675898	25HCC548A**30	CNPV*6124A**	58ME(B,C)120−20	47,000	12.5	15.0	45,500	3.90	8.7	27,800	2.68
3675899	25HCC548A**30	CNPV*6124A**	58MV(B,C)100−20	46,500	12.0	14.5	46,000	3.78	8.5	28,000	2.62
3675894	25HCC548A**30	CNPV*6124A**	58MV(B,C)120−20	46,500	12.5	15.0	45,500	3.82	8.7	27,800	2.64
3675897	25HCC548A**30	CNPV*6124A**	58PH*135−20	47,000	12.5	15.0	45,500	3.86	8.7	27,800	2.66
3675907	25HCC548A**30	CNPV*6124A**	58UVB100−20	46,500	12.0	14.5	46,000	3.78	8.5	28,000	2.62
3675906	25HCC548A**30	CNPV*6124A**	58UVB120−20	46,500	12.5	15.0	45,500	3.82	8.7	27,800	2.64
3675909	25HCC548A**30	CNPV*6124A**+TDR		47,000	11.5	14.0	47,000	3.80	8.5	28,800	2.60
3676135	25HCC548A**30	CSPH*4812A**	58CV(A,X)090−16	45,500	12.0	14.0	45,500	3.68	8.3	27,600	2.58
3676136	25HCC548A**30	CSPH*4812A**	58CV(A,X)110−20	45,500	12.0	14.0	45,500	3.70	8.3	27,600	2.58
3676137	25HCC548A**30	CSPH*4812A**	58CV(A,X)135−22	46,000	12.0	14.5	45,000	3.74	8.3	27,600	2.60
3676138	25HCC548A**30	CSPH*4812A**	58CV(A,X)155−22	46,000	12.0	14.5	45,000	3.76	8.3	27,400	2.62
3676145	25HCC548A**30	CSPH*4812A**	58HDV080−−20	45,500	11.5	13.5	46,000	3.70	8.3	28,200	2.56
3676146	25HCC548A**30	CSPH*4812A**	58HDV100−−20	46,000	12.0	14.0	46,000	3.70	8.3	28,000	2.58
3676142	25HCC548A**30	CSPH*4812A**	58ME(B,C)080−16	46,000	11.5	14.0	46,000	3.70	8.5	28,000	2.58
3676143	25HCC548A**30	CSPH*4812A**	58ME(B,C)100−20	46,000	12.0	14.5	45,500	3.74	8.3	27,600	2.60
3676144	25HCC548A**30	CSPH*4812A**	58ME(B,C)120−20	46,000	12.0	14.5	45,500	3.78	8.5	27,600	2.62
3676132	25HCC548A**30	CSPH*4812A**	58MV(B,C)080−20	45,500	11.5	14.0	45,500	3.64	8.3	27,800	2.54
3676133	25HCC548A**30	CSPH*4812A**	58MV(B,C)100−20	45,500	11.5	13.5	45,500	3.68	8.3	28,000	2.56
3676134	25HCC548A**30	CSPH*4812A**	58MV(B,C)120−20	45,500	12.0	14.0	45,500	3.70	8.3	27,800	2.58
3676139	25HCC548A**30	CSPH*4812A**	58PH*090−16	46,000	12.0	14.0	45,500	3.72	8.3	27,800	2.60
3676140	25HCC548A**30	CSPH*4812A**	58PH*110−20	46,000	12.0	14.5	45,000	3.74	8.3	27,400	2.60
3676141	25HCC548A**30	CSPH*4812A**	58PH*135−20	45,500	12.0	14.0	45,500	3.72	8.5	27,600	2.60
3676152	25HCC548A**30	CSPH*4812A**	58UVB080−20	45,500	11.5	14.0	45,500	3.64	8.3	27,800	2.54
3676153	25HCC548A**30	CSPH*4812A**	58UVB100−20	45,500	11.5	13.5	45,500	3.68	8.3	28,000	2.56
3676154	25HCC548A**30	CSPH*4812A**	58UVB120−20	45,500	12.0	14.0	45,500	3.70	8.3	27,800	2.58
3676156	25HCC548A**30	CSPH*4812A**+TDR		45,500	11.5	13.5	46,500	3.72	8.3	28,600	2.56
3676160	25HCC548A**30	CSPH*6012A**	58CV(A,X)090−16	46,500	12.0	14.5	45,500	3.74	8.5	27,600	2.62
3676161	25HCC548A**30	CSPH*6012A**	58CV(A,X)110−20	46,500	12.0	14.5	45,500	3.76	8.5	27,600	2.62
3676162	25HCC548A**30	CSPH*6012A**	58CV(A,X)135−22	46,500	12.5	14.5	45,000	3.80	8.5	27,600	2.64
3676163	25HCC548A**30	CSPH*6012A**	58CV(A,X)155−22	46,500	12.5	15.0	45,000	3.82	8.5	27,400	2.66
3676170	25HCC548A**30	CSPH*6012A**	58HDV080−−20	46,500	12.0	14.0	46,500	3.78	8.5	28,400	2.60
3676171	25HCC548A**30	CSPH*6012A**	58HDV100−−20	46,000	12.0	14.5	45,500	3.78	8.5	28,000	2.62
3676167	25HCC548A**30	CSPH*6012A**	58ME(B,C)080−16	46,500	12.0	14.0	46,000	3.78	8.5	28,200	2.60
3676168	25HCC548A**30	CSPH*6012A**	58ME(B,C)100−20	47,000	12.0	14.5	45,500	3.82	8.5	27,800	2.66
3676169	25HCC548A**30	CSPH*6012A**	58ME(B,C)120−20	47,000	12.5	15.0	45,500	3.86	8.5	27,800	2.66
3676157	25HCC548A**30	CSPH*6012A**	58MV(B,C)080−20	46,000	12.0	14.5	45,500	3.70	8.3	27,600	2.58
3676158	25HCC548A**30	CSPH*6012A**	58MV(B,C)100−20	46,500	12.0	14.0	45,500	3.74	8.5	28,000	2.60
3676159	25HCC548A**30	CSPH*6012A**	58MV(B,C)120−20	46,500	12.0	14.5	45,500	3.76	8.5	27,800	2.62
3676164	25HCC548A**30	CSPH*6012A**	58PH*090−16	46,500	12.0	14.5	45,500	3.80	8.5	27,800	2.64
3676165	25HCC548A**30	CSPH*6012A**	58PH*110−20	46,500	12.5	15.0	45,500	3.84	8.5	27,600	2.66
3676166	25HCC548A**30	CSPH*6012A**	58PH*135−20	46,500	12.0	14.5	45,500	3.82	8.5	27,800	2.64
3676183	25HCC548A**30	CSPH*6012A**	58UVB080−20	46,000	12.0	14.5	45,500	3.70	8.3	27,600	2.58
3676184	25HCC548A**30	CSPH*6012A**	58UVB100−20	46,500	12.0	14.0	45,500	3.74	8.5	28,000	2.60
3676185	25HCC548A**30	CSPH*6012A**	58UVB120−20	46,500	12.0	14.5	45,500	3.76	8.5	27,800	2.62
3676187	25HCC548A**30	CSPH*6012A**+TDR		46,500	11.5	13.5	46,500	3.76	8.3	28,800	2.58
3676274	25HCC560A**30	†FX4DN(B,F)061		57,000	12.5	15.0	57,000	3.84	8.5	35,400	2.68
3676200	25HCC560A**30	FE4ANB006+UI		56,500	12.5	15.0	56,000	3.84	8.5	35,600	2.68
3676231	25HCC560A**30	FV4BNB006		56,500	12.5	15.0	56,000	3.84	8.5	35,600	2.68
3676247	25HCC560A**30	FV4CNB006		56,500	12.5	15.0	56,000	3.84	8.5	35,600	2.68
3676259	25HCC560A**30	FX4CN(B,F)060		56,500	12.0	14.5	56,000	3.82	8.4	35,600	2.66
3676279	25HCC560A**30	FY4ANB060		56,000	11.5	13.5	57,000	3.66	8.1	36,400	2.56
3676292	25HCC560A**30	FY5BNB060		56,000	11.5	13.5	57,000	3.66	8.1	36,400	2.56
3675312	25HCC560A**30	CAP**6021A**	58CV(A,X)110−20	55,500	11.5	13.5	56,500	3.66	8.1	36,000	2.58

See notes on pg. 26

COMBINATION RATINGS CONTINUED

AHRI Ref. No.	Model Number	Coil Model Number	Furnace Model Number	Cooling Capacity	EER	SEER	High Temp		HSPF	Low Temp	
							E Capacity	E COP		H Capacity	H COP
3675314	25HCC560A**30	CAP**6021A**	58ME(B,C)100−20	55,500	12.0	14.0	56,500	3.66	8.1	35,400	2.60
3675313	25HCC560A**30	CAP**6021A**	58PH*110−20	55,500	12.0	14.0	56,500	3.70	8.2	35,600	2.62
3675318	25HCC560A**30	CAP**6021A**+TDR		55,500	11.5	13.5	56,500	3.68	8.1	36,200	2.58
3675324	25HCC560A**30	CAP**6024A**	58CV(A,X)135−22	55,500	12.0	14.0	56,500	3.70	8.2	35,600	2.62
3675325	25HCC560A**30	CAP**6024A**	58CV(A,X)155−22	56,000	12.0	14.5	56,500	3.74	8.2	35,600	2.64
3675327	25HCC560A**30	CAP**6024A**	58ME(B,C)120−20	55,500	12.0	14.0	56,500	3.70	8.2	35,400	2.62
3675326	25HCC560A**30	CAP**6024A**	58PH*135−20	55,500	12.0	14.0	56,500	3.68	8.1	35,600	2.60
3675330	25HCC560A**30	CAP**6024A**+TDR		55,500	11.5	13.5	56,500	3.68	8.1	36,200	2.58
3675332	25HCC560A**30	CAP**6025A**	58HDV100−−20	55,500	11.5	13.5	58,000	3.64	8.1	36,400	2.56
3675334	25HCC560A**30	CAP**6025A**+TDR		55,500	11.5	13.5	56,500	3.68	8.1	36,200	2.58
3675612	25HCC560A**30	CNPH*6024A**	58CV(A,X)110−20	55,500	11.5	14.0	56,500	3.66	8.1	35,800	2.58
3675613	25HCC560A**30	CNPH*6024A**	58CV(A,X)135−22	55,500	12.0	14.0	56,500	3.70	8.2	35,600	2.62
3675614	25HCC560A**30	CNPH*6024A**	58CV(A,X)155−22	56,000	12.0	14.5	56,500	3.74	8.2	35,400	2.64
3675620	25HCC560A**30	CNPH*6024A**	58HDV080−−20	56,000	11.5	13.0	58,000	3.62	8.0	36,800	2.54
3675621	25HCC560A**30	CNPH*6024A**	58HDV100−−20	55,500	11.5	13.5	58,000	3.62	8.1	36,400	2.56
3675617	25HCC560A**30	CNPH*6024A**	58ME(B,C)080−16	55,000	11.5	13.5	56,500	3.60	8.0	35,600	2.56
3675618	25HCC560A**30	CNPH*6024A**	58ME(B,C)100−20	55,500	12.0	14.0	56,500	3.68	8.1	35,400	2.60
3675619	25HCC560A**30	CNPH*6024A**	58ME(B,C)120−20	55,500	12.0	14.5	56,500	3.70	8.2	35,400	2.62
3675615	25HCC560A**30	CNPH*6024A**	58PH*110−20	55,500	12.0	14.0	56,500	3.70	8.2	35,600	2.62
3675616	25HCC560A**30	CNPH*6024A**	58PH*135−20	55,500	12.0	14.0	56,500	3.68	8.1	35,600	2.60
3675626	25HCC560A**30	CNPH*6024A**+TDR		55,500	11.5	13.5	56,500	3.66	8.1	36,200	2.58
3675643	25HCC560A**30	CNPH*6124A**	58CV(A,X)110−20	56,000	11.5	14.0	56,500	3.70	8.2	36,000	2.60
3675644	25HCC560A**30	CNPH*6124A**	58CV(A,X)135−22	56,000	12.0	14.0	56,500	3.74	8.2	35,800	2.62
3675645	25HCC560A**30	CNPH*6124A**	58CV(A,X)155−22	56,000	12.0	14.5	56,500	3.78	8.3	35,600	2.64
3675650	25HCC560A**30	CNPH*6124A**	58HDV080−−20	57,000	11.5	13.5	59,000	3.66	8.1	37,000	2.54
3675651	25HCC560A**30	CNPH*6124A**	58HDV100−−20	57,000	11.5	13.5	58,500	3.68	8.1	36,600	2.56
3675648	25HCC560A**30	CNPH*6124A**	58ME(B,C)100−20	55,500	12.0	14.0	56,500	3.72	8.2	35,600	2.62
3675649	25HCC560A**30	CNPH*6124A**	58ME(B,C)120−20	56,000	12.0	14.5	56,500	3.74	8.2	35,400	2.64
3675646	25HCC560A**30	CNPH*6124A**	58PH*110−20	56,000	12.0	14.0	56,500	3.74	8.2	35,600	2.62
3675647	25HCC560A**30	CNPH*6124A**	58PH*135−20	55,500	12.0	14.0	56,500	3.70	8.2	35,600	2.60
3675642	25HCC560A**30	CNPH*6124A**		56,000	11.5	14.0	56,500	3.72	8.2	36,200	2.60
3675656	25HCC560A**30	CNPH*6124A**+TDR		56,000	11.5	13.5	56,500	3.72	8.2	36,200	2.60
3675886	25HCC560A**30	CNPV*6024A**	58CV(A,X)135−22	55,500	12.0	14.0	56,500	3.70	8.2	35,600	2.62
3675887	25HCC560A**30	CNPV*6024A**	58CV(A,X)155−22	56,000	12.0	14.5	56,500	3.74	8.2	35,400	2.64
3676319	25HCC560A**30	CNPV*6024A**	58HDV100−−20 (DNFLWONLY)	55,500	11.5	13.5	58,000	3.62	8.1	36,400	2.56
3675889	25HCC560A**30	CNPV*6024A**	58ME(B,C)120−20	55,500	12.0	14.5	56,500	3.70	8.2	35,400	2.62
3675888	25HCC560A**30	CNPV*6024A**	58PH*135−20	55,500	12.0	14.0	56,500	3.68	8.1	35,600	2.60
3675893	25HCC560A**30	CNPV*6024A**+TDR		55,500	11.5	13.5	56,500	3.66	8.1	36,200	2.58
3675902	25HCC560A**30	CNPV*6124A**	58CV(A,X)135−22	56,500	12.0	14.5	56,500	3.80	8.3	35,600	2.66
3675903	25HCC560A**30	CNPV*6124A**	58CV(A,X)155−22	56,500	12.0	14.5	56,500	3.84	8.4	35,600	2.68
3676321	25HCC560A**30	CNPV*6124A**	58HDV100−−20 (DNFLWONLY)	57,500	11.5	13.5	58,500	3.72	8.2	36,600	2.60
3675905	25HCC560A**30	CNPV*6124A**	58ME(B,C)120−20	56,500	12.0	14.5	56,500	3.80	8.3	35,600	2.66
3675901	25HCC560A**30	CNPV*6124A**	58MV(B,C)120−20	56,000	11.8	14.0	56,500	3.72	8.2	36,000	2.60
3675904	25HCC560A**30	CNPV*6124A**	58PH*135−20	56,500	12.0	14.0	56,500	3.78	8.3	35,800	2.64
3675908	25HCC560A**30	CNPV*6124A**	58UVB120−20	56,000	11.8	14.0	56,500	3.72	8.2	36,000	2.60
3675910	25HCC560A**30	CNPV*6124A**+TDR		56,500	11.5	14.0	56,500	3.74	8.3	36,200	2.62
3676173	25HCC560A**30	CSPH*6012A**	58CV(A,X)110−20	56,000	11.5	14.0	56,500	3.72	8.1	35,800	2.62
3676174	25HCC560A**30	CSPH*6012A**	58CV(A,X)135−22	56,000	12.0	14.5	56,500	3.76	8.2	35,600	2.64
3676175	25HCC560A**30	CSPH*6012A**	58CV(A,X)155−22	56,000	12.0	14.5	56,500	3.78	8.3	35,600	2.66
3676181	25HCC560A**30	CSPH*6012A**	58HDV080−−20	56,000	11.5	13.0	58,000	3.66	8.0	37,000	2.56
3676182	25HCC560A**30	CSPH*6012A**	58HDV100−−20	55,500	11.5	13.5	58,000	3.68	8.1	36,600	2.58
3676178	25HCC560A**30	CSPH*6012A**	58ME(B,C)080−16	55,500	11.5	14.0	56,500	3.64	8.0	35,800	2.58
3676179	25HCC560A**30	CSPH*6012A**	58ME(B,C)100−20	56,000	12.0	14.0	56,500	3.72	8.2	35,600	2.62
3676180	25HCC560A**30	CSPH*6012A**	58ME(B,C)120−20	56,000	12.0	14.5	56,500	3.76	8.2	35,400	2.64
3676172	25HCC560A**30	CSPH*6012A**	58MV(B,C)120−20	55,500	11.5	14.0	56,500	3.68	8.1	36,000	2.58
3676176	25HCC560A**30	CSPH*6012A**	58PH*110−20	56,000	12.0	14.5	56,500	3.76	8.2	35,600	2.64
3676177	25HCC560A**30	CSPH*6012A**	58PH*135−20	56,000	12.0	14.0	56,500	3.74	8.2	35,600	2.62
3676186	25HCC560A**30	CSPH*6012A**	58UVB120−20	55,500	11.5	14.0	56,500	3.68	8.1	36,000	2.58
3676188	25HCC560A**30	CSPH*6012A**+TDR		55,500	11.5	13.5	56,500	3.70	8.1	36,200	2.60

† − Tested Combination

Ratings are net values reflecting the effects of circulating fan heat. Supplemental electric heat is not included. Ratings are based on:

Cooling Standard: 80°F (27°C) db 67°F (19°C) wb indoor entering air temperature and 95°F (35°C) db air entering outdoor unit.

High−Temp Heating Standard: 70°F (21°C) db indoor entering air temperature and 47°F (8°C) db 43°F (6°C) wb air entering outdoor unit.

Low−Temp Heating Standard: 70°F (21°C) db indoor entering air temperature and 17°F (−8°C) db 15°F (−9°C) wb air entering outdoor unit.

COP — Coefficient of Performance

EER — Energy Efficiency Ratio

HSPF — Heating Seasonal Performance Factor

SEER — Seasonal Energy Efficiency Ratio

TDR — Time−Delay Relay

UI — User Interface

DETAILED COOLING CAPACITIES#

EVAPORATOR AIR		CONDENSER ENTERING AIR TEMPERATURES °F (°C)																	
		75 (23.9)			85 (29.4)			95 (35)			105 (40.6)			115 (46.1)			125 (51.7)		
CFM	EWB °F (°C)	Capacity MBtuh†		Total System KW**	Capacity MBtuh†		Total System KW**	Capacity MBtuh†		Total System KW**	Capacity MBtuh†		Total System KW**	Capacity MBtuh†		Total System KW**	Capacity MBtuh†		Total System KW**
		Total	Sens‡		Total	Sens‡		Total	Sens‡		Total	Sens‡		Total	Sens‡		Total	Sens‡	
25HCC518A30 Outdoor Section With FX4DNF019 Indoor Section																			
525	72 (22.2)	21.38	11.10	1.10	20.34	10.70	1.25	19.25	10.28	1.42	18.10	9.85	1.60	16.88	9.40	1.80	15.59	8.93	2.03
	67 (19.4)	19.37	13.52	1.10	18.43	13.12	1.25	17.43	12.70	1.41	16.38	12.26	1.59	15.26	11.81	1.79	14.08	11.33	2.02
	63 (17.2)††	17.92	13.00	1.10	17.05	12.60	1.25	16.12	12.18	1.41	15.14	11.74	1.59	14.10	11.28	1.79	12.99	10.80	2.01
	62 (16.7)	17.54	15.88	1.10	16.69	15.47	1.25	15.79	15.04	1.41	14.85	14.58	1.59	13.91	13.91	1.78	13.03	13.03	2.01
	57 (13.9)	16.80	16.80	1.10	16.15	16.15	1.25	15.45	15.45	1.41	14.70	14.70	1.59	13.89	13.89	1.78	13.01	13.01	2.01
600	72 (22.2)	21.87	11.69	1.11	20.79	11.28	1.26	19.64	10.85	1.43	18.44	10.41	1.61	17.17	9.95	1.81	15.83	9.47	2.04
	67 (19.4)	19.84	14.44	1.11	18.85	14.03	1.26	17.80	13.60	1.42	16.70	13.15	1.60	15.54	12.69	1.80	14.31	12.20	2.03
	63 (17.2)††	18.37	13.86	1.11	17.45	13.45	1.26	16.48	13.02	1.42	15.45	12.57	1.60	14.37	12.10	1.80	13.22	11.61	2.02
	62 (16.7)	18.01	17.11	1.11	17.13	16.68	1.26	16.21	16.12	1.42	15.36	15.36	1.60	14.49	14.49	1.80	13.56	13.56	2.02
	57 (13.9)	17.61	17.61	1.11	16.90	16.90	1.26	16.15	16.15	1.42	15.34	15.34	1.60	14.47	14.47	1.80	13.54	13.54	2.02
675	72 (22.2)	22.26	12.24	1.12	21.13	11.82	1.27	19.94	11.39	1.44	18.70	10.94	1.62	17.39	10.48	1.82	16.02	10.00	2.05
	67 (19.4)	20.21	15.33	1.12	19.17	14.90	1.27	18.08	14.47	1.43	16.95	14.01	1.61	15.75	13.53	1.81	14.49	13.03	2.04
	63 (17.2)††	18.73	14.69	1.12	17.76	14.27	1.27	16.76	13.83	1.43	15.70	13.37	1.61	14.58	12.89	1.81	13.40	12.38	2.03
	62 (16.7)	18.42	18.24	1.12	17.56	17.56	1.27	16.76	16.76	1.43	15.90	15.90	1.61	14.98	14.98	1.81	14.00	14.00	2.04
	57 (13.9)	18.29	18.29	1.12	17.54	17.54	1.27	16.74	16.74	1.43	15.88	15.88	1.61	14.96	14.96	1.81	13.98	13.98	2.04

COOLING INDOOR MODEL	CAPACITY	POWER	FURNACE MODEL
*FX4DNF019	1.00	1.00	
FB4CNF018	0.99	1.00	
FB4CNF024	0.98	0.99	
FE4ANF002	0.99	1.00	
FF1ENP018	0.97	1.09	
FF1ENP019	0.98	1.03	
FF1ENP024	0.98	1.10	
FF1ENP025	1.00	1.01	
FV4BNF002	0.99	0.96	
FV4CNF002	0.99	0.96	
FX4CNF018	0.98	1.02	
FX4CNF024	0.99	1.00	
FX4DNF025	1.01	1.01	
FY4ANF018	0.97	1.09	
FY4ANF024	0.97	1.11	
FY5BNF018	0.98	1.07	
FY5BNF024	0.98	1.07	
CAP**1814A**	0.97	1.11	
CAP**2414A**	0.98	1.10	
CAP**2417A**	0.98	1.10	
CNPF*2418A**	0.98	1.10	
CNPH*2417A**	0.98	1.10	
CNPV*1814A**	0.97	1.09	
CNPV*1917A**	0.99	1.11	
CNPV*2414A**	0.98	1.10	
CNPV*2417A**	0.98	1.10	
CSPH*2412A**	0.98	1.10	
CAP**1814A**	0.97	1.01	58CV(A,X)070–12
CAP**2414A**	0.98	0.99	58CV(A,X)070–12
CNPH*2417A**	0.97	0.98	58CV(A,X)070–12
CNPV*1814A**	0.97	1.01	58CV(A,X)070–12
CNPV*2414A**	0.98	0.99	58CV(A,X)070–12
CSPH*2412A**	0.98	0.99	58CV(A,X)070–12
CAP**2417A**	0.98	0.99	58CV(A,X)090–16
CNPH*2417A**	0.98	0.99	58CV(A,X)090–16
CNPV*1917A**	0.99	1.00	58CV(A,X)090–16
CNPV*2417A**	0.98	0.99	58CV(A,X)090–16
CSPH*2412A**	0.98	0.99	58CV(A,X)090–16

COOLING INDOOR MODEL	CAPACITY	POWER	FURNACE MODEL
CNPH*2417A**	1.01	1.04	58HDV040––12
CSPH*2412A**	1.01	1.04	58HDV040––12
CNPH*2417A**	1.01	1.04	58HDV060––12
CSPH*2412A**	1.01	1.04	58HDV060––12
CAP**2417A**	1.00	1.01	58ME(B,C)060–12
CNPH*2417A**	0.99	1.00	58ME(B,C)060–12
CNPV*1917A**	1.01	0.98	58ME(B,C)060–12
CNPV*2417A**	0.99	1.00	58ME(B,C)060–12
CSPH*2412A**	0.99	1.00	58ME(B,C)060–12
CAP**2417A**	1.01	0.98	58MEB040–12
CNPH*2417A**	1.00	1.01	58MEB040–12
CNPV*1917A**	1.01	0.98	58MEB040–12
CNPV*2417A**	1.00	1.01	58MEB040–12
CSPH*2412A**	1.00	1.01	58MEB040–12
CAP**2417A**	0.98	0.99	58MV(B,C)060–14
CNPH*2417A**	0.98	0.99	58MV(B,C)060–14
CNPV*1917A**	0.98	0.99	58MV(B,C)060–14
CNPV*2417A**	0.98	0.99	58MV(B,C)060–14
CSPH*2412A**	0.98	0.99	58MV(B,C)060–14
CNPH*2417A**	0.97	0.98	58MV(B,C)080–14
CSPH*2412A**	0.98	0.99	58MV(B,C)080–14
CNPH*2417A**	0.98	0.99	58MVB040–14
CSPH*2412A**	0.98	0.99	58MVB040–14
CAP**1814A**	0.98	1.03	58PH*045–08
CAP**2414A**	0.99	1.00	58PH*045–08
CNPH*2417A**	0.99	1.00	58PH*045–08
CNPV*1814A**	0.98	1.03	58PH*045–08
CNPV*2414A**	0.99	1.00	58PH*045–08
CSPH*2412A**	0.99	1.00	58PH*045–08

See note on pg. 38

DETAILED COOLING CAPACITIES# CONTINUED

EVAPORATOR AIR		CONDENSER ENTERING AIR TEMPERATURES °F (°C)																	
		75 (23.9)			85 (29.4)			95 (35)			105 (40.6)			115 (46.1)			125 (51.7)		
CFM	EWB °F (°C)	Capacity MBtuh†		Total System KW**	Capacity MBtuh†		Total System KW**	Capacity MBtuh†		Total System KW**	Capacity MBtuh†		Total System KW**	Capacity MBtuh†		Total System KW**	Capacity MBtuh†		Total System KW**
		Total	Sens‡		Total	Sens‡		Total	Sens‡		Total	Sens‡		Total	Sens‡		Total	Sens‡	
25HCC524A30 Outdoor Section With FX4DNF025 Indoor Section																			
700	72 (22.2)	28.25	14.67	1.50	27.04	14.21	1.70	25.76	13.71	1.91	24.38	13.19	2.15	22.88	12.63	2.41	21.23	12.03	2.71
	67 (19.4)	25.63	17.92	1.48	24.52	17.44	1.67	23.33	16.94	1.88	22.05	16.40	2.12	20.66	15.83	2.38	19.12	15.20	2.68
	63 (17.2)††	23.76	17.24	1.46	22.71	16.76	1.66	21.59	16.25	1.87	20.38	15.71	2.10	19.07	15.13	2.37	17.61	14.49	2.68
	62 (16.7)	23.28	21.08	1.46	22.25	20.58	1.65	21.17	20.06	1.87	20.00	19.48	2.10	18.77	18.68	2.37	17.59	17.59	2.68
	57 (13.9)	22.30	22.30	1.46	21.50	21.50	1.65	20.65	20.65	1.86	19.72	19.72	2.10	18.70	18.70	2.37	17.56	17.56	2.68
800	72 (22.2)	28.87	15.41	1.53	27.60	14.93	1.73	26.26	14.44	1.94	24.83	13.91	2.17	23.27	13.34	2.44	21.57	12.73	2.73
	67 (19.4)	26.21	19.09	1.50	25.04	18.60	1.69	23.80	18.09	1.90	22.47	17.55	2.14	21.02	16.96	2.40	19.44	16.32	2.71
	63 (17.2)††	24.31	18.34	1.48	23.21	17.84	1.68	22.04	17.33	1.89	20.78	16.77	2.12	19.42	16.18	2.39	17.92	15.53	2.70
	62 (16.7)	23.85	22.64	1.48	22.80	22.10	1.68	21.69	21.51	1.89	20.58	20.58	2.12	19.49	19.49	2.39	18.28	18.28	2.70
	57 (13.9)	23.30	23.30	1.48	22.45	22.45	1.67	21.53	21.53	1.89	20.55	20.55	2.12	19.46	19.46	2.39	18.26	18.26	2.70
900	72 (22.2)	29.34	16.11	1.56	28.03	15.63	1.75	26.65	15.12	1.96	25.17	14.59	2.20	23.56	14.01	2.46	21.82	13.39	2.76
	67 (19.4)	26.65	20.21	1.52	25.44	19.71	1.72	24.16	19.19	1.93	22.79	18.63	2.16	21.30	18.03	2.43	19.68	17.38	2.73
	63 (17.2)††	24.73	19.38	1.50	23.59	18.88	1.70	22.39	18.35	1.91	21.09	17.78	2.14	19.69	17.17	2.41	18.16	16.50	2.71
	62 (16.7)	24.35	24.04	1.50	23.29	23.29	1.70	22.31	22.31	1.91	21.27	21.27	2.15	20.12	20.12	2.41	18.86	18.86	2.72
	57 (13.9)	24.14	24.14	1.50	23.24	23.24	1.70	22.28	22.28	1.91	21.24	21.24	2.15	20.10	20.10	2.41	18.84	18.84	2.72

COOLING INDOOR MODEL	CAPACITY	POWER	FURNACE MODEL
*FX4DNF025	1.00	1.00	
FB4CNF024	0.98	1.02	
FB4CNF030	0.98	0.98	
FE4AN(B,F)003	0.99	0.99	
FE4ANF002	0.99	0.99	
FF1ENP024	0.98	1.11	
FF1ENP025	0.99	1.03	
FF1ENP030	0.98	1.11	
FF1ENP031	0.99	1.03	
FF1ENP037	0.99	1.03	
FV4BN(B,F)003	0.99	0.99	
FV4BNF002	0.99	0.99	
FV4CN(B,F)003	0.99	0.99	
FV4CNF002	0.99	0.99	
FX4CNF024	0.99	1.03	
FX4CNF030	0.99	0.99	
FX4DN(B,F)031	1.00	1.02	
FY4ANF024	0.98	1.11	
FY4ANF030	0.99	1.08	
FY5BNF024	0.98	1.06	
FY5BNF030	0.98	1.09	
CAP**2414A**	0.98	1.09	
CAP**2417A**	0.98	1.09	
CAP**3014A**	0.98	1.09	
CAP**3017A**	0.98	1.09	
CNPF*2418A**	0.98	1.09	
CNPH*2417A**	0.98	1.09	
CNPH*3017A**	0.98	1.09	
CNPV*2414A**	0.98	1.09	
CNPV*2417A**	0.98	1.09	
CNPV*3014A**	0.98	1.09	
CNPV*3017A**	0.98	1.09	
CNPV*3117A**	0.98	1.06	
CSPH*2412A**	0.98	1.09	
CSPH*3012A**	0.98	1.09	
CAP**2414A**	0.98	0.98	58CV(A,X)070–12
CAP**3014A**	0.98	0.98	58CV(A,X)070–12

COOLING INDOOR MODEL	CAPACITY	POWER	FURNACE MODEL
CNPH*2417A**	0.98	0.98	58CV(A,X)070–12
CNPH*3017A**	0.98	0.98	58CV(A,X)070–12
CNPV*2414A**	0.98	0.98	58CV(A,X)070–12
CNPV*3014A**	0.98	0.98	58CV(A,X)070–12
CSPH*2412A**	0.98	0.98	58CV(A,X)070–12
CSPH*3012A**	0.98	0.98	58CV(A,X)070–12
CAP**2417A**	0.98	0.98	58CV(A,X)090–16
CAP**3017A**	0.98	0.98	58CV(A,X)090–16
CNPH*2417A**	0.98	0.98	58CV(A,X)090–16
CNPH*3017A**	0.98	0.98	58CV(A,X)090–16
CNPV*2417A**	0.98	0.98	58CV(A,X)090–16
CNPV*3017A**	0.98	0.98	58CV(A,X)090–16
CNPV*3117A**	0.98	0.98	58CV(A,X)090–16
CSPH*2412A**	0.98	0.98	58CV(A,X)090–16
CSPH*3012A**	0.98	0.98	58CV(A,X)090–16
CNPH*2417A**	0.98	0.98	58CV(A,X)110–20
CNPH*3017A**	0.98	0.98	58CV(A,X)110–20
CSPH*2412A**	0.98	0.98	58CV(A,X)110–20
CSPH*3012A**	0.98	0.98	58CV(A,X)110–20
CNPH*2417A**	0.98	0.98	58CV(A,X)135–22
CNPH*3017A**	0.98	0.98	58CV(A,X)135–22
CSPH*2412A**	0.98	0.98	58CV(A,X)135–22
CSPH*3012A**	0.98	0.98	58CV(A,X)135–22
CNPH*2417A**	0.98	0.98	58CV(A,X)155–22
CNPH*3017A**	0.98	0.98	58CV(A,X)155–22
CSPH*2412A**	0.98	0.98	58CV(A,X)155–22
CSPH*3012A**	0.98	0.98	58CV(A,X)155–22
CAP**3619A**	1.00	1.00	58HDV040––12
CNPH*2417A**	0.98	1.00	58HDV040––12
CNPH*3017A**	0.98	1.01	58HDV040––12
CNPH*3117A**	1.00	1.00	58HDV040––12
CSPH*2412A**	0.98	1.00	58HDV040––12
CSPH*3012A**	0.98	1.01	58HDV040––12
CAP**3619A**	1.00	1.00	58HDV060––12
CNPH*2417A**	0.98	1.00	58HDV060––12
CNPH*3017A**	0.98	1.01	58HDV060––12
CNPH*3117A**	1.00	1.00	58HDV060––12

COOLING INDOOR MODEL	CAPACITY	POWER	FURNACE MODEL
CSPH*2412A**	0.98	1.00	58HDV060––12
CSPH*3012A**	0.98	1.01	58HDV060––12
CAP**2417A**	0.98	0.98	58ME(B,C)060–12
CAP**3017A**	0.98	0.98	58ME(B,C)060–12
CNPH*2417A**	0.98	0.98	58ME(B,C)060–12
CNPH*3017A**	0.98	0.98	58ME(B,C)060–12
CNPV*2417A**	0.98	0.98	58ME(B,C)060–12
CNPV*3017A**	0.98	0.98	58ME(B,C)060–12
CNPV*3117A**	0.98	0.94	58ME(B,C)060–12
CSPH*2412A**	0.98	0.98	58ME(B,C)060–12
CSPH*3012A**	0.98	0.98	58ME(B,C)060–12
CAP**2417A**	0.98	0.98	58ME(B,C)080–12
CAP**3017A**	0.98	0.98	58ME(B,C)080–12
CNPH*2417A**	0.98	0.98	58ME(B,C)080–12
CNPH*3017A**	0.98	0.98	58ME(B,C)080–12
CNPV*2417A**	0.98	0.98	58ME(B,C)080–12
CNPV*3017A**	0.98	0.98	58ME(B,C)080–12
CNPV*3117A**	0.98	0.94	58ME(B,C)080–12
CSPH*2412A**	0.98	0.98	58ME(B,C)080–12
CSPH*3012A**	0.98	0.98	58ME(B,C)080–12
CAP**2417A**	0.98	0.98	58MEB040–12
CAP**3017A**	0.98	0.98	58MEB040–12
CNPH*2417A**	0.98	0.98	58MEB040–12
CNPH*3017A**	0.98	0.98	58MEB040–12
CNPV*2417A**	0.98	0.98	58MEB040–12
CNPV*3017A**	0.98	0.98	58MEB040–12
CNPV*3117A**	0.98	0.94	58MEB040–12
CSPH*2412A**	0.98	0.98	58MEB040–12
CSPH*3012A**	0.98	0.98	58MEB040–12
CAP**2417A**	0.98	0.98	58MV(B,C)060–14
CAP**3017A**	0.98	0.98	58MV(B,C)060–14
CNPH*2417A**	0.98	0.98	58MV(B,C)060–14
CNPH*3017A**	0.98	0.98	58MV(B,C)060–14
CNPV*2417A**	0.98	0.98	58MV(B,C)060–14
CNPV*3017A**	0.98	0.98	58MV(B,C)060–14
CNPV*3117A**	0.98	0.94	58MV(B,C)060–14
CSPH*2412A**	0.98	0.98	58MV(B,C)060–14

DETAILED COOLING CAPACITIES# CONTINUED

25HCC524A30 Outdoor Section With FX4DNF025 Indoor Section

COOLING INDOOR MODEL	CAPACITY	POWER	FURNACE MODEL
CSPH*3012A**	0.98	0.98	58MV(B,C)060–14
CNPH*2417A**	0.98	0.98	58MV(B,C)080–14
CNPH*3017A**	0.98	0.98	58MV(B,C)080–14
CSPH*2412A**	0.98	0.98	58MV(B,C)080–14
CSPH*3012A**	0.98	0.98	58MV(B,C)080–14
CNPH*2417A**	0.97	0.97	58MV(B,C)080–20
CNPH*3017A**	0.98	0.98	58MV(B,C)080–20
CSPH*2412A**	0.98	0.98	58MV(B,C)080–20
CSPH*3012A**	0.98	0.98	58MV(B,C)080–20
CNPH*2417A**	0.98	0.98	58MV(B,C)100–20
CNPH*3017A**	0.98	0.98	58MV(B,C)100–20
CSPH*2412A**	0.98	0.98	58MV(B,C)100–20
CSPH*3012A**	0.98	0.98	58MV(B,C)100–20
CNPH*2417A**	0.98	0.98	58MV(B,C)120–20
CNPH*3017A**	0.98	0.98	58MV(B,C)120–20
CSPH*2412A**	0.98	0.98	58MV(B,C)120–20
CSPH*3012A**	0.98	0.98	58MV(B,C)120–20
CNPH*2417A**	0.98	1.00	58MVB040–14
CNPH*3017A**	0.98	0.98	58MVB040–14
CSPH*2412A**	0.98	0.98	58MVB040–14
CSPH*3012A**	0.98	0.98	58MVB040–14
CAP**2414A**	0.98	1.00	58PH*045–08
CAP**3014A**	0.98	0.98	58PH*045–08
CNPH*2417A**	0.98	1.02	58PH*045–08
CNPH*3017A**	0.98	0.98	58PH*045–08
CNPV*2414A**	0.98	1.00	58PH*045–08
CNPV*3014A**	0.98	0.98	58PH*045–08
CSPH*2412A**	0.98	1.00	58PH*045–08
CSPH*3012A**	0.98	0.98	58PH*045–08

See note on pg. 38

DETAILED COOLING CAPACITIES# CONTINUED

EVAPORATOR AIR		CONDENSER ENTERING AIR TEMPERATURES °F (°C)																	
		75 (23.9)			85 (29.4)			95 (35)			105 (40.6)			115 (46.1)			125 (51.7)		
CFM	EWB °F (°C)	Capacity MBtuh†		Total System KW**	Capacity MBtuh†		Total System KW**	Capacity MBtuh†		Total System KW**	Capacity MBtuh†		Total System KW**	Capacity MBtuh†		Total System KW**	Capacity MBtuh†		Total System KW**
		Total	Sens‡		Total	Sens‡		Total	Sens‡		Total	Sens‡		Total	Sens‡		Total	Sens‡	
25HCC530A30 Outdoor Section With FX4DNF031 Indoor Section																			
875	72 (22.2)	34.40	17.74	1.83	32.81	17.14	2.05	31.16	16.52	2.29	29.42	15.88	2.56	27.55	15.20	2.87	25.53	14.48	3.23
	67 (19.4)	31.23	21.80	1.82	29.80	21.20	2.04	28.29	20.57	2.28	26.69	19.93	2.55	24.96	19.24	2.86	23.10	18.49	3.22
	63 (17.2)††	28.95	20.97	1.81	27.62	20.37	2.03	26.22	19.74	2.27	24.73	19.09	2.54	23.11	18.39	2.86	21.35	17.64	3.22
	62 (16.7)	28.38	25.74	1.81	27.09	25.12	2.03	25.75	24.46	2.26	24.33	23.73	2.54	22.91	22.91	2.86	21.51	21.51	3.22
	57 (13.9)	27.40	27.40	1.81	26.39	26.39	2.02	25.32	25.32	2.26	24.15	24.15	2.54	22.88	22.88	2.86	21.48	21.48	3.22
1000	72 (22.2)	35.08	18.63	1.86	33.43	18.02	2.08	31.71	17.39	2.32	29.89	16.74	2.59	27.95	16.05	2.90	25.86	15.32	3.25
	67 (19.4)	31.88	23.23	1.85	30.37	22.61	2.06	28.80	21.98	2.30	27.13	21.31	2.58	25.35	20.60	2.89	23.43	19.84	3.24
	63 (17.2)††	29.57	22.30	1.84	28.18	21.68	2.05	26.71	21.05	2.29	25.16	20.38	2.57	23.49	19.66	2.88	21.67	18.88	3.24
	62 (16.7)	29.06	27.61	1.84	27.73	26.92	2.05	26.39	26.39	2.29	25.13	25.13	2.57	23.77	23.77	2.88	22.28	22.28	3.24
	57 (13.9)	28.58	28.58	1.84	27.49	27.49	2.05	26.34	26.34	2.29	25.10	25.10	2.57	23.74	23.74	2.88	22.26	22.26	3.24
1125	72 (22.2)	35.61	19.48	1.89	33.89	18.86	2.11	32.11	18.22	2.35	30.24	17.56	2.62	28.25	16.86	2.93	26.10	16.12	3.28
	67 (19.4)	32.37	24.59	1.87	30.81	23.96	2.09	29.18	23.31	2.33	27.47	22.63	2.60	25.64	21.90	2.91	23.68	21.10	3.27
	63 (17.2)††	30.05	23.56	1.86	28.60	22.94	2.08	27.09	22.29	2.32	25.49	21.60	2.59	23.78	20.86	2.91	21.93	20.05	3.27
	62 (16.7)	29.68	29.51	1.86	28.45	28.45	2.08	27.22	27.22	2.32	25.91	25.91	2.60	24.49	24.49	2.91	22.92	22.92	3.27
	57 (13.9)	29.56	29.56	1.86	28.41	28.41	2.08	27.19	27.19	2.32	25.88	25.88	2.59	24.46	24.46	2.91	22.89	22.89	3.27

COOLING INDOOR MODEL	CAPACITY	POWER	FURNACE MODEL
*FX4DN(B,F)031	1.00	1.00	
FB4CNF030	0.99	1.03	
FB4CNF036	0.99	1.03	
FE4AN(B,F)003	0.99	0.99	
FE4AN(B,F)005	1.01	0.98	
FE4ANF002	0.99	0.99	
FF1ENP030	0.96	1.08	
FF1ENP031	0.99	1.03	
FF1ENP036	0.99	1.10	
FF1ENP037	0.99	1.03	
FV4BN(B,F)003	0.99	0.99	
FV4BN(B,F)005	1.01	0.98	
FV4BNF002	0.99	0.99	
FV4CN(B,F)003	0.99	0.99	
FV4CN(B,F)005	1.01	0.98	
FV4CNF002	0.99	0.99	
FX4CN(B,F)036	0.99	1.03	
FX4CNF030	0.99	1.03	
FX4DN(B,F)037	1.02	1.02	
FY4ANF030	0.97	1.08	
FY4ANF036	0.98	1.09	
FY5BNF030	0.99	1.03	
FY5BNF036	0.99	1.07	
CAP**3014A**	0.98	1.09	
CAP**3017A**	0.98	1.09	
CAP**3614A**	0.98	1.09	
CAP**3617A**	0.98	1.09	
CAP**3619A**	0.98	1.09	
CAP**3621A**	0.98	1.09	
CNPF*3618A**	0.98	1.09	
CNPH*3017A**	0.98	1.09	
CNPH*3617A**	0.98	1.09	
CNPV*3014A**	0.98	1.09	
CNPV*3017A**	0.98	1.09	
CNPV*3117A**	1.01	1.09	
CNPV*3617A**	0.98	1.09	
CNPV*3621A**	0.98	1.09	

COOLING INDOOR MODEL	CAPACITY	POWER	FURNACE MODEL
CNPV*3717A**	1.01	1.10	
CSPH*3012A**	0.98	1.09	
CSPH*3612A**	0.98	1.09	
CAP**3014A**	0.97	1.01	58CV(A,X)070–12
CAP**3614A**	0.98	1.02	58CV(A,X)070–12
CNPH*3017A**	0.98	1.02	58CV(A,X)070–12
CNPH*3617A**	0.98	1.02	58CV(A,X)070–12
CNPV*3014A**	0.97	1.01	58CV(A,X)070–12
CSPH*3012A**	0.98	1.02	58CV(A,X)070–12
CSPH*3612A**	0.98	1.02	58CV(A,X)070–12
CAP**3017A**	0.98	0.98	58CV(A,X)090–16
CAP**3617A**	0.98	0.98	58CV(A,X)090–16
CNPH*3017A**	0.98	0.98	58CV(A,X)090–16
CNPH*3617A**	0.98	0.98	58CV(A,X)090–16
CNPV*3017A**	0.98	0.98	58CV(A,X)090–16
CNPV*3117A**	1.00	1.00	58CV(A,X)090–16
CNPV*3617A**	0.98	0.98	58CV(A,X)090–16
CNPV*3717A**	1.01	1.01	58CV(A,X)090–16
CSPH*3012A**	0.98	0.98	58CV(A,X)090–16
CSPH*3612A**	0.98	0.98	58CV(A,X)090–16
CAP**3621A**	0.98	0.98	58CV(A,X)110–20
CNPH*3017A**	0.98	0.98	58CV(A,X)110–20
CNPH*3617A**	0.98	0.98	58CV(A,X)110–20
CNPV*3621A**	0.98	0.98	58CV(A,X)110–20
CSPH*3012A**	0.98	0.98	58CV(A,X)110–20
CSPH*3612A**	0.98	0.98	58CV(A,X)110–20
CNPH*3017A**	0.98	0.98	58CV(A,X)135–22
CNPH*3617A**	0.98	0.98	58CV(A,X)135–22
CSPH*3012A**	0.98	0.98	58CV(A,X)135–22
CSPH*3612A**	0.98	0.98	58CV(A,X)135–22
CNPH*3017A**	0.98	0.98	58CV(A,X)155–22
CNPH*3617A**	0.98	0.98	58CV(A,X)155–22
CSPH*3012A**	0.98	0.98	58CV(A,X)155–22
CSPH*3612A**	0.98	0.98	58CV(A,X)155–22
CAP**3619A**	0.98	1.02	58HDV040––12
CAP**3619A**	0.98	1.02	58HDV040––12
CNPH*3017A**	0.98	1.06	58HDV040––12

COOLING INDOOR MODEL	CAPACITY	POWER	FURNACE MODEL
CNPH*3117A**	1.00	1.02	58HDV040––12
CNPH*3617A**	0.98	1.06	58HDV040––12
CSPH*3012A**	0.98	1.06	58HDV040––12
CSPH*3612A**	0.98	1.02	58HDV040––12
CAP**3619A**	0.98	1.02	58HDV060––12
CAP**3619A**	0.98	1.02	58HDV060––12
CNPH*3017A**	0.99	1.03	58HDV060––12
CNPH*3117A**	1.01	1.03	58HDV060––12
CNPH*3617A**	0.99	1.03	58HDV060––12
CSPH*3012A**	0.99	1.03	58HDV060––12
CSPH*3612A**	0.99	1.03	58HDV060––12
CAP**3017A**	0.99	0.99	58ME(B,C)060–12
CAP**3617A**	0.99	0.99	58ME(B,C)060–12
CNPH*3017A**	0.99	0.99	58ME(B,C)060–12
CNPH*3617A**	0.99	0.99	58ME(B,C)060–12
CNPV*3017A**	0.99	0.99	58ME(B,C)060–12
CNPV*3117A**	1.01	1.01	58ME(B,C)060–12
CNPV*3617A**	0.99	0.99	58ME(B,C)060–12
CNPV*3717A**	1.01	1.01	58ME(B,C)060–12
CSPH*3012A**	0.99	0.99	58ME(B,C)060–12
CSPH*3612A**	0.99	0.99	58ME(B,C)060–12
CAP**3017A**	0.99	0.99	58ME(B,C)080–12
CAP**3617A**	0.99	0.99	58ME(B,C)080–12
CNPH*3017A**	0.99	0.99	58ME(B,C)080–12
CNPH*3617A**	0.99	0.99	58ME(B,C)080–12
CNPV*3017A**	0.99	0.99	58ME(B,C)080–12
CNPV*3117A**	1.01	1.01	58ME(B,C)080–12
CNPV*3617A**	0.99	0.99	58ME(B,C)080–12
CNPV*3717A**	1.03	1.03	58ME(B,C)080–12
CSPH*3012A**	0.99	0.99	58ME(B,C)080–12
CSPH*3612A**	0.99	0.99	58ME(B,C)080–12
CAP**3017A**	0.99	0.99	58ME(B,C)080–16
CAP**3617A**	0.99	0.99	58ME(B,C)080–16
CNPH*3017A**	0.99	1.01	58ME(B,C)080–16
CNPH*3617A**	0.99	1.01	58ME(B,C)080–16
CNPV*3017A**	0.99	1.01	58ME(B,C)080–16
CNPV*3117A**	1.02	1.02	58ME(B,C)080–16

DETAILED COOLING CAPACITIES# CONTINUED

25HCC530A30 Outdoor Section With FX4DNF031 Indoor Section

COOLING INDOOR MODEL	CAPACITY	POWER	FURNACE MODEL
CNPV*3617A**	0.99	1.01	58ME(B,C)080–16
CNPV*3717A**	1.04	1.04	58ME(B,C)080–16
CSPH*3012A**	0.99	1.03	58ME(B,C)080–16
CSPH*3612A**	0.99	0.99	58ME(B,C)080–16
CAP**3017A**	0.99	0.99	58MEB040–12
CAP**3617A**	0.99	0.99	58MEB040–12
CNPH*3017A**	0.99	0.99	58MEB040–12
CNPH*3617A**	0.99	0.99	58MEB040–12
CNPV*3017A**	0.99	0.99	58MEB040–12
CNPV*3117A**	1.01	1.01	58MEB040–12
CNPV*3617A**	0.99	0.99	58MEB040–12
CNPV*3717A**	1.01	0.98	58MEB040–12
CSPH*3012A**	0.99	0.99	58MEB040–12
CSPH*3612A**	0.99	0.99	58MEB040–12
CAP**3017A**	0.98	0.98	58MV(B,C)060–14
CAP**3617A**	0.98	0.98	58MV(B,C)060–14
CNPH*3017A**	0.98	0.98	58MV(B,C)060–14
CNPH*3617A**	0.98	0.98	58MV(B,C)060–14
CNPV*3017A**	0.98	0.98	58MV(B,C)060–14
CNPV*3117A**	1.01	1.01	58MV(B,C)060–14
CNPV*3617A**	0.98	0.98	58MV(B,C)060–14
CNPV*3717A**	1.01	1.01	58MV(B,C)060–14
CSPH*3012A**	0.98	0.98	58MV(B,C)060–14
CSPH*3612A**	0.98	0.98	58MV(B,C)060–14
CAP**3621A**	0.98	0.98	58MV(B,C)080–14
CNPH*3017A**	0.97	1.01	58MV(B,C)080–14
CNPH*3617A**	0.97	1.01	58MV(B,C)080–14
CNPV*3621A**	0.97	1.01	58MV(B,C)080–14
CSPH*3012A**	0.97	1.01	58MV(B,C)080–14
CSPH*3612A**	0.98	0.98	58MV(B,C)080–14
CAP**3621A**	0.98	0.98	58MV(B,C)080–20
CNPH*3017A**	0.98	1.02	58MV(B,C)080–20
CNPH*3617A**	0.98	1.02	58MV(B,C)080–20
CNPV*3621A**	0.98	1.00	58MV(B,C)080–20
CSPH*3012A**	0.98	1.02	58MV(B,C)080–20
CSPH*3612A**	0.98	0.98	58MV(B,C)080–20
CAP**3621A**	0.97	0.97	58MV(B,C)100–20
CNPH*3017A**	0.97	1.01	58MV(B,C)100–20
CNPH*3617A**	0.97	1.01	58MV(B,C)100–20
CNPV*3621A**	0.97	1.01	58MV(B,C)100–20
CSPH*3012A**	0.97	1.01	58MV(B,C)100–20
CSPH*3612A**	0.98	0.98	58MV(B,C)100–20
CNPH*3017A**	0.98	0.98	58MV(B,C)120–20
CNPH*3617A**	0.98	0.98	58MV(B,C)120–20
CSPH*3012A**	0.98	0.98	58MV(B,C)120–20
CSPH*3612A**	0.98	0.98	58MV(B,C)120–20
CNPH*3017A**	0.97	1.01	58MVB040–14
CNPH*3617A**	0.97	1.01	58MVB040–14
CSPH*3012A**	0.97	1.01	58MVB040–14
CSPH*3612A**	0.98	1.02	58MVB040–14
CAP**3017A**	0.98	1.02	58PH*070–16
CAP**3617A**	0.99	1.03	58PH*070–16
CNPH*3017A**	0.98	1.02	58PH*070–16
CNPH*3617A**	0.98	1.02	58PH*070–16
CNPV*3017A**	0.98	1.02	58PH*070–16
CNPV*3117A**	1.01	1.01	58PH*070–16
CNPV*3617A**	0.98	1.02	58PH*070–16
CNPV*3717A**	1.02	1.02	58PH*070–16
CSPH*3012A**	0.98	1.02	58PH*070–16

COOLING INDOOR MODEL	CAPACITY	POWER	FURNACE MODEL
CSPH*3612A**	0.99	1.03	58PH*070–16
CAP**3621A**	0.99	0.99	58PH*090–16
CNPH*3017A**	0.98	1.02	58PH*090–16
CNPH*3617A**	0.99	1.03	58PH*090–16
CNPV*3621A**	0.99	1.03	58PH*090–16
CSPH*3012A**	0.98	1.02	58PH*090–16
CSPH*3612A**	0.99	0.99	58PH*090–16

See note on pg. 38

DETAILED COOLING CAPACITIES# CONTINUED

EVAPORATOR AIR		CONDENSER ENTERING AIR TEMPERATURES °F (°C)																	
		75 (23.9)			85 (29.4)			95 (35)			105 (40.6)			115 (46.1)			125 (51.7)		
CFM	EWB °F (°C)	Capacity MBtuh†		Total System KW**	Capacity MBtuh†		Total System KW**	Capacity MBtuh†		Total System KW**	Capacity MBtuh†		Total System KW**	Capacity MBtuh†		Total System KW**	Capacity MBtuh†		Total System KW**
		Total	Sens‡		Total	Sens‡		Total	Sens‡		Total	Sens‡		Total	Sens‡		Total	Sens‡	
25HCC536A30 Outdoor Section With FX4DNF037 Indoor Section																			
1050	72 (22.2)	41.59	22.07	2.25	39.75	21.35	2.51	37.77	20.58	2.79	35.67	19.78	3.11	33.40	18.93	3.48	30.96	18.02	3.90
	67 (19.4)	37.90	27.12	2.23	36.20	26.38	2.48	34.37	25.60	2.77	32.42	24.78	3.09	30.32	23.91	3.45	28.05	22.97	3.88
	63 (17.2)††	35.22	26.13	2.22	33.62	25.39	2.47	31.90	24.60	2.75	30.07	23.77	3.07	28.09	22.88	3.44	25.96	21.93	3.87
	62 (16.7)	34.53	32.04	2.21	32.97	31.27	2.47	31.31	30.44	2.75	29.55	29.53	3.07	27.74	27.74	3.44	26.04	26.04	3.87
	57 (13.9)	33.22	33.22	2.21	32.01	32.01	2.46	30.68	30.68	2.74	29.25	29.25	3.06	27.70	27.70	3.44	26.00	26.00	3.86
1200	72 (22.2)	42.40	23.16	2.28	40.49	22.43	2.54	38.44	21.66	2.83	36.24	20.84	3.15	33.91	19.98	3.51	31.38	19.05	3.93
	67 (19.4)	38.68	28.89	2.26	36.90	28.13	2.52	35.00	27.34	2.80	32.97	26.50	3.12	30.79	25.60	3.49	28.46	24.65	3.91
	63 (17.2)††	35.97	27.78	2.25	34.30	27.02	2.50	32.52	26.22	2.78	30.61	25.37	3.10	28.56	24.46	3.47	26.36	23.49	3.90
	62 (16.7)	35.34	34.38	2.24	33.74	33.54	2.50	32.07	31.86	2.78	30.45	30.45	3.10	28.80	28.80	3.47	26.99	26.99	3.90
	57 (13.9)	34.65	34.65	2.24	33.35	33.35	2.50	31.93	31.93	2.78	30.41	30.41	3.10	28.76	28.76	3.47	26.96	26.96	3.90
1350	72 (22.2)	43.03	24.20	2.31	41.06	23.46	2.58	38.93	22.68	2.86	36.68	21.85	3.18	34.27	20.98	3.55	31.68	20.04	3.96
	67 (19.4)	39.27	30.57	2.29	37.43	29.81	2.55	35.47	29.00	2.83	33.38	28.14	3.15	31.16	27.22	3.52	28.76	26.23	3.94
	63 (17.2)††	36.55	29.35	2.28	34.82	28.58	2.53	32.98	27.76	2.81	31.02	26.89	3.13	28.92	25.95	3.50	26.67	24.94	3.93
	62 (16.7)	36.05	36.44	2.28	34.51	34.51	2.53	33.01	33.01	2.81	31.41	31.41	3.14	29.67	29.67	3.51	27.77	27.77	3.93
	57 (13.9)	35.84	35.84	2.28	34.46	34.46	2.53	32.97	32.97	2.81	31.37	31.37	3.14	29.63	29.63	3.51	27.74	27.74	3.93

COOLING INDOOR MODEL	CAPACITY	POWER	FURNACE MODEL
*FX4DN(B,F)037	1.00	1.00	
FB4CNF036	0.97	1.05	
FB4CNF042	1.00	1.04	
FE4AN(B,F)003	0.97	1.01	
FE4AN(B,F)005	1.01	1.01	
FE4ANB006	1.02	0.98	
FE4ANF002	0.97	1.01	
FF1ENP036	0.97	1.10	
FF1ENP037	0.97	1.08	
FV4BN(B,F)003	0.97	1.01	
FV4BN(B,F)005	1.01	1.01	
FV4BNB006	1.02	0.98	
FV4BNF002	0.97	1.01	
FV4CN(B,F)003	0.97	1.01	
FV4CN(B,F)005	1.01	1.01	
FV4CNB006	1.02	0.98	
FV4CNF002	0.97	1.01	
FX4CN(B,F)036	0.98	1.02	
FX4CN(B,F)042	0.99	1.04	
FX4DN(B,F)043	1.00	1.00	
FY4ANF036	0.97	1.10	
FY4ANF042	0.98	1.12	
FY5BNF036	0.97	1.06	
FY5BNF042	0.99	1.07	
CAP**3614A**	0.95	1.08	
CAP**3617A**	0.97	1.10	
CAP**3619A**	0.97	1.10	
CAP**3621A**	0.97	1.10	
CAP**4221A**	0.97	1.10	
CAP**4224A**	0.97	1.10	
CNPF*3618A**	0.97	1.10	
CNPH*3617A**	0.97	1.10	
CNPH*4221A**	0.97	1.10	
CNPV*3617A**	0.97	1.10	
CNPV*3621A**	0.97	1.10	
CNPV*3717A**	1.01	1.09	
CNPV*4217A**	0.98	1.11	

COOLING INDOOR MODEL	CAPACITY	POWER	FURNACE MODEL
CNPV*4221A**	0.97	1.10	
CNPV*4324A**	1.01	1.09	
CSPH*3612A**	0.97	1.10	
CSPH*4212A**	0.97	1.10	
CAP**3614A**	0.95	1.04	58CV(A,X)070–12
CNPH*3617A**	0.95	1.04	58CV(A,X)070–12
CNPH*4221A**	0.97	1.01	58CV(A,X)070–12
CSPH*3612A**	0.96	1.00	58CV(A,X)070–12
CSPH*4212A**	0.97	1.01	58CV(A,X)070–12
CAP**3617A**	0.96	1.00	58CV(A,X)090–16
CNPH*3617A**	0.96	1.00	58CV(A,X)090–16
CNPH*4221A**	0.97	1.01	58CV(A,X)090–16
CNPV*3617A**	0.96	1.00	58CV(A,X)090–16
CNPV*3717A**	0.99	0.99	58CV(A,X)090–16
CNPV*4217A**	0.98	1.02	58CV(A,X)090–16
CSPH*3612A**	0.97	1.01	58CV(A,X)090–16
CSPH*4212A**	0.97	1.01	58CV(A,X)090–16
CAP**3621A**	0.97	1.01	58CV(A,X)110–20
CAP**4221A**	0.97	1.01	58CV(A,X)110–20
CNPH*3617A**	0.96	1.00	58CV(A,X)110–20
CNPH*4221A**	0.97	1.01	58CV(A,X)110–20
CNPV*3621A**	0.96	1.00	58CV(A,X)110–20
CNPV*4221A**	0.97	1.01	58CV(A,X)110–20
CSPH*3612A**	0.97	1.01	58CV(A,X)110–20
CSPH*4212A**	0.98	1.02	58CV(A,X)110–20
CAP**4224A**	0.97	1.01	58CV(A,X)135–22
CNPH*3617A**	0.96	1.00	58CV(A,X)135–22
CNPH*4221A**	0.97	1.01	58CV(A,X)135–22
CNPV*4324A**	1.00	1.00	58CV(A,X)135–22
CSPH*3612A**	0.97	1.01	58CV(A,X)135–22
CSPH*4212A**	0.98	1.02	58CV(A,X)135–22
CAP**4224A**	0.97	0.97	58CV(A,X)155–22
CNPH*3617A**	0.96	1.00	58CV(A,X)155–22
CNPH*4221A**	0.97	1.01	58CV(A,X)155–22
CNPV*4324A**	1.00	1.00	58CV(A,X)155–22
CSPH*3612A**	0.97	1.01	58CV(A,X)155–22
CSPH*4212A**	0.98	0.98	58CV(A,X)155–22

COOLING INDOOR MODEL	CAPACITY	POWER	FURNACE MODEL
CAP**3619A**	0.95	1.08	58HDV040––12
CNPH*3617A**	0.95	1.08	58HDV040––12
CNPH*4221A**	0.97	1.06	58HDV040––12
CNPH*4321A**	0.98	1.07	58HDV040––12
CSPH*3612A**	0.95	1.08	58HDV040––12
CSPH*4212A**	0.97	1.06	58HDV040––12
CAP**3619A**	0.96	1.04	58HDV060––12
CNPH*3617A**	0.96	1.04	58HDV060––12
CNPH*4221A**	0.97	1.06	58HDV060––12
CNPH*4321A**	0.98	1.02	58HDV060––12
CSPH*3612A**	0.96	1.04	58HDV060––12
CSPH*4212A**	0.97	1.06	58HDV060––12
CNPH*3617A**	0.97	1.06	58HDV080––20
CNPH*4221A**	0.98	1.02	58HDV080––20
CNPH*4321A**	0.98	1.01	58HDV080––20
CSPH*3612A**	0.97	1.06	58HDV080––20
CSPH*4212A**	0.98	1.02	58HDV080––20
CAP**4224A**	0.98	1.02	58HDV100––20
CNPH*3617A**	0.97	1.01	58HDV100––20
CNPH*4221A**	0.98	1.01	58HDV100––20
CNPH*4321A**	0.98	0.98	58HDV100––20
CNPV*4324A**	1.02	1.02	58HDV100––20
CSPH*3612A**	0.97	1.01	58HDV100––20
CSPH*4212A**	0.98	1.01	58HDV100––20
CAP**3617A**	0.97	1.01	58ME(B,C)060–12
CNPH*3617A**	0.97	1.01	58ME(B,C)060–12
CNPH*4221A**	0.98	1.02	58ME(B,C)060–12
CNPV*3617A**	0.97	1.01	58ME(B,C)060–12
CNPV*3717A**	1.01	1.01	58ME(B,C)060–12
CNPV*4217A**	0.98	1.02	58ME(B,C)060–12
CSPH*3612A**	0.97	1.01	58ME(B,C)060–12
CSPH*4212A**	0.98	1.02	58ME(B,C)060–12
CAP**3617A**	0.97	1.01	58ME(B,C)080–12
CNPH*3617A**	0.96	1.00	58ME(B,C)080–12
CNPH*4221A**	0.98	1.02	58ME(B,C)080–12
CNPV*3617A**	0.96	1.00	58ME(B,C)080–12
CNPV*3717A**	1.00	1.00	58ME(B,C)080–12

DETAILED COOLING CAPACITIES# CONTINUED

25HCC536A30 Outdoor Section With FX4DNF037 Indoor Section

COOLING INDOOR MODEL	CAPACITY	POWER	FURNACE MODEL
CNPV*4217A**	0.98	1.02	58ME(B,C)080–12
CSPH*3612A**	0.97	1.01	58ME(B,C)080–12
CSPH*4212A**	0.98	1.02	58ME(B,C)080–12
CAP**3617A**	0.97	1.01	58ME(B,C)080–16
CNPH*3617A**	0.96	1.00	58ME(B,C)080–16
CNPH*4221A**	0.98	1.02	58ME(B,C)080–16
CNPV*3617A**	0.96	1.00	58ME(B,C)080–16
CNPV*3717A**	1.01	1.01	58ME(B,C)080–16
CNPV*4217A**	0.98	1.02	58ME(B,C)080–16
CSPH*3612A**	0.97	1.01	58ME(B,C)080–16
CSPH*4212A**	0.98	1.02	58ME(B,C)080–16
CAP**3621A**	0.97	1.01	58ME(B,C)100–20
CAP**4221A**	0.98	1.02	58ME(B,C)100–20
CNPH*3617A**	0.96	1.00	58ME(B,C)100–20
CNPH*4221A**	0.97	1.01	58ME(B,C)100–20
CNPV*3621A**	0.96	1.00	58ME(B,C)100–20
CNPV*4221A**	0.97	1.01	58ME(B,C)100–20
CSPH*3612A**	0.97	1.01	58ME(B,C)100–20
CSPH*4212A**	0.98	0.98	58ME(B,C)100–20
CAP**3617A**	0.97	1.01	58MEB040–12
CNPH*3617A**	0.96	1.00	58MEB040–12
CNPH*4221A**	0.98	1.02	58MEB040–12
CNPV*3617A**	0.96	1.00	58MEB040–12
CNPV*3717A**	1.01	1.01	58MEB040–12
CNPV*4217A**	0.98	1.02	58MEB040–12
CSPH*3612A**	0.97	1.01	58MEB040–12
CSPH*4212A**	0.98	1.02	58MEB040–12
CAP**3617A**	0.97	1.01	58MV(B,C)060–14
CNPH*3617A**	0.96	1.00	58MV(B,C)060–14
CNPH*4221A**	0.97	1.01	58MV(B,C)060–14
CNPV*3617A**	0.96	1.00	58MV(B,C)060–14
CNPV*3717A**	1.00	1.00	58MV(B,C)060–14
CNPV*4217A**	0.98	1.02	58MV(B,C)060–14
CSPH*3612A**	0.97	1.01	58MV(B,C)060–14
CSPH*4212A**	0.98	1.02	58MV(B,C)060–14
CAP**3621A**	0.96	1.00	58MV(B,C)080–14
CAP**4221A**	0.97	1.01	58MV(B,C)080–14
CNPH*3617A**	0.95	1.04	58MV(B,C)080–14
CNPH*4221A**	0.97	1.01	58MV(B,C)080–14
CNPV*3621A**	0.95	1.04	58MV(B,C)080–14
CNPV*4221A**	0.97	1.01	58MV(B,C)080–14
CNPV*4324A**	1.01	1.01	58MV(B,C)080–14
CNPV*4821A**	0.98	1.02	58MV(B,C)080–14
CNPV*6024A**	0.99	1.04	58MV(B,C)080–14
CSPH*3612A**	0.96	1.00	58MV(B,C)080–14
CSPH*4212A**	0.97	1.01	58MV(B,C)080–14
CAP**3621A**	0.96	1.00	58MV(B,C)080–20
CAP**4221A**	0.97	1.01	58MV(B,C)080–20
CNPH*3617A**	0.95	1.04	58MV(B,C)080–20
CNPH*4221A**	0.97	1.01	58MV(B,C)080–20
CNPV*3621A**	0.95	0.99	58MV(B,C)080–20
CNPV*4221A**	0.97	1.01	58MV(B,C)080–20
CNPV*4324A**	1.01	1.01	58MV(B,C)080–20
CSPH*3612A**	0.96	1.00	58MV(B,C)080–20
CSPH*4212A**	0.97	1.01	58MV(B,C)080–20
CAP**3621A**	0.97	1.01	58MV(B,C)100–20
CAP**4221A**	0.97	1.01	58MV(B,C)100–20
CNPH*3617A**	0.96	1.00	58MV(B,C)100–20
CNPH*4221A**	0.97	1.01	58MV(B,C)100–20

COOLING INDOOR MODEL	CAPACITY	POWER	FURNACE MODEL
CNPV*3621A**	0.96	1.00	58MV(B,C)100–20
CNPV*4221A**	0.97	1.01	58MV(B,C)100–20
CSPH*3612A**	0.97	1.01	58MV(B,C)100–20
CSPH*4212A**	0.98	1.02	58MV(B,C)100–20
CAP**4224A**	0.97	1.01	58MV(B,C)120–20
CNPH*3617A**	0.96	1.00	58MV(B,C)120–20
CNPH*4221A**	0.97	1.01	58MV(B,C)120–20
CNPV*4324A**	1.00	1.00	58MV(B,C)120–20
CSPH*3612A**	0.97	1.01	58MV(B,C)120–20
CSPH*4212A**	0.98	1.02	58MV(B,C)120–20
CAP**4224A**	0.97	1.01	58MVB040–14
CNPH*3617A**	0.95	1.04	58MVB040–14
CNPH*4221A**	0.97	1.05	58MVB040–14
CNPV*4324A**	0.99	1.02	58MVB040–14
CSPH*3612A**	0.96	1.04	58MVB040–14
CSPH*4212A**	0.97	1.01	58MVB040–14
CAP**3614A**	0.95	1.08	58PH*045–08
CNPH*3617A**	0.95	1.06	58PH*045–08
CNPH*4221A**	0.97	1.08	58PH*045–08
CSPH*3612A**	0.96	1.04	58PH*045–08
CSPH*4212A**	0.97	1.08	58PH*045–08
CAP**3617A**	0.96	1.04	58PH*070–16
CNPH*3617A**	0.95	1.04	58PH*070–16
CNPH*4221A**	0.97	1.05	58PH*070–16
CNPV*3617A**	0.95	1.04	58PH*070–16
CNPV*3717A**	0.99	1.04	58PH*070–16
CNPV*4217A**	0.98	1.02	58PH*070–16
CSPH*3612A**	0.96	1.00	58PH*070–16
CSPH*4212A**	0.97	1.01	58PH*070–16
CAP**3621A**	0.97	1.01	58PH*090–16
CAP**4221A**	0.98	1.02	58PH*090–16
CNPH*3617A**	0.96	1.00	58PH*090–16
CNPH*4221A**	0.98	1.02	58PH*090–16
CNPV*3621A**	0.97	1.01	58PH*090–16
CNPV*4221A**	0.98	1.02	58PH*090–16
CSPH*3612A**	0.97	1.01	58PH*090–16
CSPH*4212A**	0.98	1.02	58PH*090–16
CAP**3621A**	0.98	1.02	58PH*110–20
CAP**4221A**	0.98	1.02	58PH*110–20
CNPH*3617A**	0.97	1.01	58PH*110–20
CNPH*4221A**	0.98	1.02	58PH*110–20
CNPV*3621A**	0.97	1.01	58PH*110–20
CNPV*4221A**	0.98	1.02	58PH*110–20
CSPH*3612A**	0.97	1.01	58PH*110–20
CSPH*4212A**	0.98	1.02	58PH*110–20

See note on pg. 38

DETAILED COOLING CAPACITIES# CONTINUED

EVAPORATOR AIR		CONDENSER ENTERING AIR TEMPERATURES °F (°C)																	
		75 (23.9)			85 (29.4)			95 (35)			105 (40.6)			115 (46.1)			125 (51.7)		
CFM	EWB °F (°C)	Capacity MBtuh†		Total System KW**	Capacity MBtuh†		Total System KW**	Capacity MBtuh†		Total System KW**	Capacity MBtuh†		Total System KW**	Capacity MBtuh†		Total System KW**	Capacity MBtuh†		Total System KW**
		Total	Sens‡		Total	Sens‡		Total	Sens‡		Total	Sens‡		Total	Sens‡		Total	Sens‡	
25HCC542A30 Outdoor Section With FX4DNF043 Indoor Section																			
1225	72 (22.2)	50.43	25.70	2.47	48.01	24.76	2.86	45.51	23.81	3.26	42.89	22.83	3.69	40.16	21.82	4.13	37.25	20.76	4.61
	67 (19.4)	45.65	31.32	2.59	43.47	30.39	2.96	41.22	29.44	3.33	38.86	28.47	3.73	36.38	27.46	4.15	33.74	26.40	4.62
	63 (17.2)††	42.23	30.12	2.67	40.23	29.20	3.01	38.16	28.26	3.36	35.97	27.30	3.74	33.68	26.29	4.16	31.23	25.22	4.61
	62 (16.7)	41.36	36.82	2.68	39.42	35.88	3.02	37.42	34.91	3.37	35.33	33.87	3.75	33.17	32.70	4.16	31.09	31.09	4.61
	57 (13.9)	39.50	39.50	2.72	38.01	38.01	3.04	36.44	36.44	3.38	34.77	34.77	3.75	32.98	32.98	4.16	31.05	31.05	4.61
1400	72 (22.2)	51.53	26.95	2.47	48.98	25.98	2.88	46.35	25.01	3.29	43.62	24.01	3.72	40.76	22.98	4.17	37.75	21.90	4.65
	67 (19.4)	46.66	33.31	2.60	44.38	32.35	2.98	42.00	31.37	3.36	39.54	30.39	3.76	36.95	29.35	4.19	34.21	28.25	4.66
	63 (17.2)††	43.19	31.97	2.69	41.08	31.02	3.04	38.90	30.06	3.40	36.62	29.07	3.78	34.22	28.03	4.20	31.69	26.94	4.66
	62 (16.7)	42.36	39.45	2.70	40.35	38.44	3.05	38.28	37.36	3.40	36.20	36.20	3.78	34.27	34.27	4.20	32.20	32.20	4.66
	57 (13.9)	41.23	41.23	2.72	39.62	39.62	3.06	37.93	37.93	3.41	36.14	36.14	3.78	34.22	34.22	4.20	32.16	32.16	4.66
1575	72 (22.2)	52.37	28.11	2.48	49.72	27.13	2.90	47.00	26.14	3.31	44.15	25.12	3.75	41.21	24.07	4.20	38.11	22.98	4.69
	67 (19.4)	47.45	35.19	2.62	45.05	34.20	3.00	42.59	33.23	3.39	40.05	32.20	3.80	37.37	31.13	4.23	34.58	30.00	4.70
	63 (17.2)††	43.93	33.72	2.71	41.73	32.75	3.07	39.46	31.77	3.43	37.10	30.75	3.82	34.64	29.68	4.24	32.04	28.54	4.70
	62 (16.7)	43.23	41.84	2.72	41.18	40.82	3.07	39.23	39.23	3.43	37.32	37.32	3.82	35.29	35.29	4.24	33.12	33.12	4.70
	57 (13.9)	42.69	42.69	2.73	40.98	40.98	3.08	39.18	39.18	3.44	37.28	37.28	3.82	35.25	35.25	4.24	33.08	33.08	4.70

COOLING INDOOR MODEL	CAPACITY	POWER	FURNACE MODEL
*FX4DN(B,F)043	1.00	1.00	
FB4CNF042	1.01	1.05	
FB4CNF048	1.01	1.01	
FE4AN(B,F)003	0.98	1.02	
FE4AN(B,F)005	1.01	0.97	
FE4ANB006	1.01	0.97	
FV4BN(B,F)003	0.98	1.02	
FV4BN(B,F)005	1.01	0.97	
FV4BNB006	1.01	0.97	
FV4CN(B,F)003	0.98	1.02	
FV4CN(B,F)005	1.01	0.97	
FV4CNB006	1.01	0.97	
FX4CN(B,F)042	1.01	1.05	
FX4CN(B,F)048	1.01	1.01	
FX4DN(B,F)049	1.01	0.97	
FY4ANF042	1.00	1.09	
FY4ANF048	1.01	1.10	
FY5BNF042	1.01	1.05	
FY5BNF048	1.01	1.05	
CAP**4221A**	0.99	1.07	
CAP**4224A**	0.99	1.07	
CAP**4817A**	1.01	1.10	
CAP**4821A**	1.00	1.09	
CAP**4823A**	1.00	1.09	
CAP**4824A**	1.00	1.09	
CNPF*4818A**	1.00	1.09	
CNPH*4221A**	0.99	1.07	
CNPH*4821A**	1.00	1.09	
CNPV*4217A**	1.00	1.09	
CNPV*4221A**	0.99	1.07	
CNPV*4324A**	1.01	1.05	
CNPV*4821A**	1.00	1.09	
CNPV*4824A**	1.00	1.09	
CSPH*4212A**	0.99	1.07	
CSPH*4812A**	1.00	1.09	
CAP**4817A**	1.01	1.01	58ME(B,C)080–12
CNPH*4221A**	0.99	1.03	58ME(B,C)080–12

COOLING INDOOR MODEL	CAPACITY	POWER	FURNACE MODEL
CNPH*4821A**	1.01	1.05	58ME(B,C)080–12
CNPV*4217A**	1.00	1.04	58ME(B,C)080–12
CSPH*4212A**	1.00	1.04	58ME(B,C)080–12
CSPH*4812A**	1.01	1.01	58ME(B,C)080–12
CAP**4817A**	1.00	1.00	58ME(B,C)080–16
CNPH*4221A**	0.99	1.03	58ME(B,C)080–16
CNPH*4821A**	1.00	1.04	58ME(B,C)080–16
CNPV*4217A**	0.99	1.03	58ME(B,C)080–16
CSPH*4212A**	1.00	1.04	58ME(B,C)080–16
CSPH*4812A**	1.00	1.00	58ME(B,C)080–16
CAP**4817A**	1.00	1.04	58PH*070–16
CNPH*4221A**	0.98	1.06	58PH*070–16
CNPH*4821A**	1.00	1.04	58PH*070–16
CNPV*4217A**	0.99	1.07	58PH*070–16
CSPH*4212A**	0.99	1.07	58PH*070–16
CSPH*4812A**	1.00	1.04	58PH*070–16
CAP**4221A**	0.99	1.03	58PH*090–16
CAP**4821A**	1.00	1.00	58PH*090–16
CNPH*4221A**	0.99	1.03	58PH*090–16
CNPH*4821A**	1.01	1.01	58PH*090–16
CNPV*4221A**	0.99	1.03	58PH*090–16
CNPV*4821A**	1.01	1.01	58PH*090–16
CSPH*4212A**	1.00	1.04	58PH*090–16
CSPH*4812A**	1.01	1.01	58PH*090–16
CAP**4221A**	0.99	0.99	58PH*110–20
CAP**4821A**	1.00	1.00	58PH*110–20
CNPH*4221A**	0.99	1.03	58PH*110–20
CNPH*4821A**	1.01	1.01	58PH*110–20
CNPV*4221A**	0.99	1.03	58PH*110–20
CNPV*4324A**	1.01	0.97	58PH*110–20
CNPV*4821A**	1.01	1.01	58PH*110–20
CSPH*4212A**	1.00	1.04	58PH*110–20
CSPH*4812A**	1.01	1.01	58PH*110–20
CAP**4224A**	0.99	1.03	58PH*135–20
CAP**4824A**	1.00	1.00	58PH*135–20
CNPH*4221A**	0.99	1.03	58PH*135–20
CNPH*4821A**	1.00	1.00	58PH*135–20

COOLING INDOOR MODEL	CAPACITY	POWER	FURNACE MODEL
CNPV*4324A**	1.01	0.97	58PH*135–20
CNPV*4824A**	1.00	1.00	58PH*135–20
CSPH*4212A**	1.00	1.04	58PH*135–20
CSPH*4812A**	1.00	1.00	58PH*135–20
CNPH*4221A**	0.98	1.03	58CV(A,X)070–12
CNPH*4821A**	0.99	1.03	58CV(A,X)070–12
CSPH*4212A**	0.99	1.03	58CV(A,X)070–12
CSPH*4812A**	1.00	1.04	58CV(A,X)070–12
CAP**4817A**	1.00	1.00	58CV(A,X)090–16
CNPH*4221A**	0.98	1.02	58CV(A,X)090–16
CNPH*4821A**	1.00	1.04	58CV(A,X)090–16
CNPV*4217A**	0.99	1.03	58CV(A,X)090–16
CSPH*4212A**	1.00	1.04	58CV(A,X)090–16
CSPH*4812A**	1.00	1.00	58CV(A,X)090–16
CAP**4221A**	0.98	1.02	58CV(A,X)110–20
CAP**4821A**	1.00	1.00	58CV(A,X)110–20
CNPH*4221A**	0.98	1.02	58CV(A,X)110–20
CNPH*4821A**	1.00	1.00	58CV(A,X)110–20
CNPV*4221A**	0.98	1.02	58CV(A,X)110–20
CNPV*4324A**	1.01	1.01	58CV(A,X)110–20
CNPV*4821A**	1.00	1.00	58CV(A,X)110–20
CSPH*4212A**	0.98	1.02	58CV(A,X)110–20
CSPH*4812A**	1.00	1.00	58CV(A,X)110–20
CAP**4224A**	0.99	0.99	58CV(A,X)135–22
CAP**4824A**	1.00	1.00	58CV(A,X)135–22
CNPH*4221A**	0.99	1.03	58CV(A,X)135–22
CNPH*4821A**	1.00	1.00	58CV(A,X)135–22
CNPV*4324A**	1.01	0.97	58CV(A,X)135–22
CNPV*4824A**	1.00	1.00	58CV(A,X)135–22
CSPH*4212A**	1.00	1.04	58CV(A,X)135–22
CSPH*4812A**	1.01	1.01	58CV(A,X)135–22
CAP**4224A**	0.99	0.99	58CV(A,X)155–22
CAP**4824A**	1.00	1.00	58CV(A,X)155–22
CNPH*4221A**	0.99	1.03	58CV(A,X)155–22
CNPH*4821A**	1.00	1.00	58CV(A,X)155–22
CNPV*4324A**	1.01	0.97	58CV(A,X)155–22
CNPV*4824A**	1.00	1.00	58CV(A,X)155–22

DETAILED COOLING CAPACITIES# CONTINUED

25HCC542A30 Outdoor Section With FX4DNF043 Indoor Section

COOLING INDOOR MODEL	CAPACITY	POWER	FURNACE MODEL
CSPH*4212A**	1.00	1.04	58CV(A,X)155–22
CSPH*4812A**	1.01	1.01	58CV(A,X)155–22
CAP**4817A**	1.01	1.01	58ME(B,C)060–12
CNPH*4221A**	0.99	1.03	58ME(B,C)060–12
CNPH*4821A**	1.01	1.05	58ME(B,C)060–12
CNPV*4217A**	1.00	1.04	58ME(B,C)060–12
CSPH*4212A**	1.00	1.04	58ME(B,C)060–12
CSPH*4812A**	1.01	1.01	58ME(B,C)060–12
CAP**4221A**	0.99	0.99	58ME(B,C)100–20
CAP**4821A**	1.00	1.00	58ME(B,C)100–20
CNPH*4221A**	0.99	1.03	58ME(B,C)100–20
CNPH*4821A**	1.01	1.01	58ME(B,C)100–20
CNPV*4221A**	0.99	1.03	58ME(B,C)100–20
CNPV*4324A**	1.01	1.01	58ME(B,C)100–20
CNPV*4821A**	1.01	1.01	58ME(B,C)100–20
CSPH*4212A**	1.00	1.04	58ME(B,C)100–20
CSPH*4812A**	1.01	1.01	58ME(B,C)100–20
CAP**4224A**	0.99	0.99	58ME(B,C)120–20
CAP**4824A**	1.01	1.01	58ME(B,C)120–20
CNPH*4221A**	0.99	0.99	58ME(B,C)120–20
CNPH*4821A**	1.01	1.01	58ME(B,C)120–20
CNPV*4324A**	1.01	0.97	58ME(B,C)120–20
CNPV*4824A**	1.01	1.01	58ME(B,C)120–20
CSPH*4212A**	0.99	0.99	58ME(B,C)120–20
CSPH*4812A**	1.01	1.01	58ME(B,C)120–20
CAP**4817A**	1.01	1.01	58MEB040–12
CNPH*4221A**	0.99	1.03	58MEB040–12
CNPH*4821A**	1.01	1.05	58MEB040–12
CNPV*4217A**	1.00	1.04	58MEB040–12
CSPH*4212A**	1.00	1.04	58MEB040–12
CSPH*4812A**	1.01	1.01	58MEB040–12
CAP**4817A**	1.01	1.01	58MV(B,C)060–14
CNPH*4221A**	0.99	1.03	58MV(B,C)060–14
CNPH*4821A**	1.00	1.00	58MV(B,C)060–14
CNPV*4217A**	1.00	1.04	58MV(B,C)060–14
CSPH*4212A**	1.00	1.04	58MV(B,C)060–14
CSPH*4812A**	1.01	1.01	58MV(B,C)060–14
CAP**4221A**	0.98	1.02	58MV(B,C)080–14
CAP**4821A**	0.99	1.03	58MV(B,C)080–14
CNPH*4221A**	0.98	1.03	58MV(B,C)080–14
CNPH*4821A**	0.99	1.03	58MV(B,C)080–14
CNPV*4221A**	0.98	1.03	58MV(B,C)080–14
CNPV*4821A**	0.99	1.03	58MV(B,C)080–14
CSPH*4212A**	0.99	1.03	58MV(B,C)080–14
CSPH*4812A**	0.99	1.03	58MV(B,C)080–14
CAP**4221A**	0.98	1.02	58MV(B,C)080–20
CAP**4821A**	1.00	1.04	58MV(B,C)080–20
CNPH*4221A**	0.98	1.02	58MV(B,C)080–20
CNPH*4821A**	1.00	1.04	58MV(B,C)080–20
CNPV*4221A**	0.98	1.02	58MV(B,C)080–20
CNPV*4324A**	1.01	1.01	58MV(B,C)080–20
CNPV*4821A**	1.00	1.04	58MV(B,C)080–20
CSPH*4212A**	1.00	1.04	58MV(B,C)080–20
CSPH*4812A**	1.00	1.00	58MV(B,C)080–20
CAP**4221A**	0.98	1.02	58MV(B,C)100–20
CAP**4821A**	0.99	1.03	58MV(B,C)100–20
CNPH*4221A**	0.98	1.02	58MV(B,C)100–20
CNPH*4821A**	0.99	1.03	58MV(B,C)100–20
CNPV*4221A**	0.98	1.02	58MV(B,C)100–20

COOLING INDOOR MODEL	CAPACITY	POWER	FURNACE MODEL
CNPV*4324A**	1.01	1.01	58MV(B,C)100–20
CNPV*4821A**	0.99	1.03	58MV(B,C)100–20
CSPH*4212A**	0.99	1.03	58MV(B,C)100–20
CSPH*4812A**	1.00	1.04	58MV(B,C)100–20
CAP**4224A**	0.98	1.02	58MV(B,C)120–20
CAP**4824A**	1.00	1.00	58MV(B,C)120–20
CNPH*4221A**	0.98	1.02	58MV(B,C)120–20
CNPH*4821A**	1.00	1.00	58MV(B,C)120–20
CNPV*4324A**	1.01	1.01	58MV(B,C)120–20
CNPV*4824A**	1.00	1.00	58MV(B,C)120–20
CSPH*4212A**	0.98	1.02	58MV(B,C)120–20
CSPH*4812A**	1.00	1.00	58MV(B,C)120–20
CAP**4224A**	0.98	1.02	58MVB040–14
CAP**4824A**	0.99	1.03	58MVB040–14
CNPH*4221A**	0.98	1.02	58MVB040–14
CNPH*4821A**	0.99	1.03	58MVB040–14
CNPV*4324A**	1.01	1.01	58MVB040–14
CNPV*4824A**	0.99	1.03	58MVB040–14
CSPH*4212A**	0.99	1.03	58MVB040–14
CSPH*4812A**	0.99	1.03	58MVB040–14
CAP**4823A**	1.01	1.04	58HDV080––20
CNPH*4221A**	0.99	1.03	58HDV080––20
CNPH*4321A**	1.01	1.01	58HDV080––20
CNPH*4821A**	1.01	1.04	58HDV080––20
CSPH*4212A**	0.99	1.03	58HDV080––20
CSPH*4812A**	1.01	1.04	58HDV080––20
CAP**4224A**	0.99	1.03	58HDV100––20
CNPH*4221A**	0.99	1.03	58HDV100––20
CNPH*4321A**	1.01	1.01	58HDV100––20
CNPH*4821A**	1.01	1.01	58HDV100––20
CNPV*4324A**	1.01	1.01	58HDV100––20
CNPV*4824A**	1.01	1.01	58HDV100––20
CSPH*4212A**	0.99	1.03	58HDV100––20
CSPH*4812A**	1.01	1.01	58HDV100––20

See note on pg. 38

DETAILED COOLING CAPACITIES# CONTINUED

EVAPORATOR AIR		CONDENSER ENTERING AIR TEMPERATURES °F (°C)																	
		75 (23.9)			85 (29.4)			95 (35)			105 (40.6)			115 (46.1)			125 (51.7)		
CFM	EWB °F (°C)	Capacity MBtuh†		Total System KW**	Capacity MBtuh†		Total System KW**	Capacity MBtuh†		Total System KW**	Capacity MBtuh†		Total System KW**	Capacity MBtuh†		Total System KW**	Capacity MBtuh†		Total System KW**
		Total	Sens‡		Total	Sens‡		Total	Sens‡		Total	Sens‡		Total	Sens‡		Total	Sens‡	
25HCC548A30 Outdoor Section With FX4DNF049 Indoor Section																			
1400	72 (22.2)	57.26	29.51	2.88	54.23	28.34	3.32	51.16	27.19	3.75	48.02	26.02	4.19	44.73	24.81	4.65	41.29	23.57	5.16
	67 (19.4)	52.18	36.28	2.92	49.48	35.14	3.33	46.73	33.99	3.74	43.90	32.83	4.17	40.93	31.62	4.62	37.80	30.36	5.14
	63 (17.2)††	48.48	34.97	2.94	46.01	33.84	3.34	43.48	32.71	3.73	40.88	31.55	4.15	38.14	30.36	4.60	35.25	29.10	5.11
	62 (16.7)	47.52	42.88	2.95	45.12	41.72	3.34	42.69	40.54	3.73	40.19	39.27	4.14	37.70	37.70	4.60	35.35	35.35	5.12
	57 (13.9)	45.66	45.66	2.96	43.79	43.79	3.34	41.86	41.86	3.72	39.82	39.82	4.14	37.65	37.65	4.60	35.30	35.30	5.12
1600	72 (22.2)	58.35	30.94	2.92	55.18	29.75	3.36	51.96	28.57	3.80	48.68	27.37	4.24	45.27	26.15	4.71	41.70	24.88	5.22
	67 (19.4)	53.25	38.62	2.96	50.38	37.44	3.38	47.50	36.26	3.79	44.54	35.07	4.22	41.45	33.83	4.68	38.22	32.53	5.19
	63 (17.2)††	49.51	37.15	2.98	46.89	35.98	3.38	44.25	34.83	3.78	41.52	33.64	4.20	38.69	32.41	4.66	35.70	31.12	5.17
	62 (16.7)	48.61	45.99	2.99	46.11	44.72	3.38	43.64	43.39	3.78	41.34	41.34	4.20	39.01	39.01	4.66	36.50	36.50	5.18
	57 (13.9)	47.59	47.59	2.99	45.57	45.57	3.38	43.48	43.48	3.78	41.28	41.28	4.20	38.96	38.96	4.66	36.46	36.46	5.18
1800	72 (22.2)	59.17	32.29	2.96	55.88	31.08	3.41	52.54	29.88	3.84	49.16	28.67	4.29	45.65	27.43	4.76	41.98	26.15	5.27
	67 (19.4)	54.02	40.84	3.00	51.05	39.64	3.42	48.06	38.43	3.84	45.00	37.20	4.27	41.84	35.93	4.73	38.52	34.58	5.24
	63 (17.2)††	50.28	39.22	3.03	47.57	38.03	3.43	44.82	36.83	3.83	42.01	35.62	4.25	39.10	34.35	4.71	36.04	33.00	5.22
	62 (16.7)	49.55	48.76	3.03	47.11	47.11	3.43	44.87	44.87	3.83	42.54	42.54	4.26	40.07	40.07	4.72	37.40	37.40	5.23
	57 (13.9)	49.21	49.21	3.03	47.04	47.04	3.43	44.81	44.81	3.83	42.49	42.49	4.26	40.03	40.03	4.72	37.36	37.36	5.23

COOLING INDOOR MODEL	CAPACITY	POWER	FURNACE MODEL
*FX4DN(B,F)049	1.00	1.00	
FB4CNF048	0.97	1.05	
FB4CNF060	0.99	1.03	
FE4AN(B,F)005	0.98	0.98	
FE4ANB006	0.99	0.99	
FV4BN(B,F)005	0.98	0.98	
FV4BNB006	0.99	0.99	
FV4CN(B,F)005	0.98	0.98	
FV4CNB006	0.99	0.99	
FX4CN(B,F)048	0.99	1.03	
FX4CN(B,F)060	1.00	1.00	
FX4DN(B,F)061	1.01	1.01	
FY4ANB060	0.99	1.08	
FY4ANF048	0.97	1.08	
FY5BNB060	1.00	1.09	
FY5BNF048	0.98	1.02	
CAP**4817A**	0.95	1.03	
CAP**4821A**	0.96	1.04	
CAP**4823A**	0.96	1.04	
CAP**4824A**	0.96	1.04	
CAP**6021A**	0.98	1.06	
CAP**6024A**	0.98	1.06	
CAP**6025A**	0.98	1.06	
CNPF*4818A**	0.94	1.02	
CNPH*4821A**	0.96	1.04	
CNPH*6024A**	0.98	1.06	
CNPH*6124A**	0.99	1.08	
CNPV*4821A**	0.96	1.04	
CNPV*4824A**	0.96	1.04	
CNPV*6024A**	0.98	1.06	
CNPV*6124A**	0.99	1.08	
CSPH*4812A**	0.96	1.04	
CSPH*6012A**	0.98	1.06	
CAP**4817A**	0.96	1.04	58CV(A,X)090–16
CNPH*4821A**	0.95	0.99	58CV(A,X)090–16
CNPH*6024A**	0.97	1.01	58CV(A,X)090–16
CNPH*6124A**	0.97	1.01	58CV(A,X)090–16

COOLING INDOOR MODEL	CAPACITY	POWER	FURNACE MODEL
CSPH*4812A**	0.96	1.00	58CV(A,X)090–16
CSPH*6012A**	0.98	1.02	58CV(A,X)090–16
CAP**4821A**	0.95	1.03	58CV(A,X)110–20
CAP**6021A**	0.97	1.01	58CV(A,X)110–20
CNPH*4821A**	0.96	1.00	58CV(A,X)110–20
CNPH*6024A**	0.97	1.01	58CV(A,X)110–20
CNPH*6124A**	0.98	1.02	58CV(A,X)110–20
CNPV*4821A**	0.96	1.00	58CV(A,X)110–20
CNPV*6124A**	0.99	0.99	58CV(A,X)110–20
CSPH*4812A**	0.96	1.00	58CV(A,X)110–20
CSPH*6012A**	0.98	1.02	58CV(A,X)110–20
CAP**4824A**	0.96	1.00	58CV(A,X)135–22
CAP**6024A**	0.97	1.01	58CV(A,X)135–22
CNPH*4821A**	0.96	1.00	58CV(A,X)135–22
CNPH*6024A**	0.97	0.97	58CV(A,X)135–22
CNPH*6124A**	0.98	0.98	58CV(A,X)135–22
CNPV*4824A**	0.96	1.00	58CV(A,X)135–22
CNPV*6024A**	0.97	0.97	58CV(A,X)135–22
CNPV*6124A**	0.99	0.99	58CV(A,X)135–22
CSPH*4812A**	0.97	1.01	58CV(A,X)135–22
CSPH*6012A**	0.98	0.98	58CV(A,X)135–22
CAP**4824A**	0.96	1.00	58CV(A,X)155–22
CAP**6024A**	0.98	0.98	58CV(A,X)155–22
CNPH*4821A**	0.96	1.00	58CV(A,X)155–22
CNPH*6024A**	0.98	0.98	58CV(A,X)155–22
CNPH*6124A**	0.98	0.98	58CV(A,X)155–22
CNPV*4824A**	0.96	1.00	58CV(A,X)155–22
CNPV*6024A**	0.98	0.98	58CV(A,X)155–22
CNPV*6124A**	0.99	0.99	58CV(A,X)155–22
CSPH*4812A**	0.97	1.01	58CV(A,X)155–22
CSPH*6012A**	0.98	0.98	58CV(A,X)155–22
CAP**4823A**	0.96	1.04	58HDV080––20
CNPH*4821A**	0.96	1.04	58HDV080––20
CNPH*6024A**	0.99	1.03	58HDV080––20
CNPH*6124A**	0.99	1.03	58HDV080––20
CSPH*4812A**	0.96	1.04	58HDV080––20
CSPH*6012A**	0.98	1.02	58HDV080––20

COOLING INDOOR MODEL	CAPACITY	POWER	FURNACE MODEL
CAP**6025A**	0.98	1.02	58HDV100––20
CNPH*4821A**	0.97	1.01	58HDV100––20
CNPH*6024A**	0.98	1.02	58HDV100––20
CNPH*6124A**	0.99	1.01	58HDV100––20
CNPV*4824A**	0.97	1.01	58HDV100––20
CNPV*6024A**	0.98	1.02	58HDV100––20
CNPV*6124A**	1.00	1.02	58HDV100––20
CSPH*4812A**	0.97	1.01	58HDV100––20
CSPH*6012A**	0.97	1.01	58HDV100––20
CAP**4817A**	0.96	1.04	58ME(B,C)080–16
CNPH*4821A**	0.96	1.04	58ME(B,C)080–16
CNPH*6024A**	0.98	1.02	58ME(B,C)080–16
CNPH*6124A**	0.98	1.02	58ME(B,C)080–16
CSPH*4812A**	0.97	1.05	58ME(B,C)080–16
CSPH*6012A**	0.98	1.02	58ME(B,C)080–16
CAP**4821A**	0.96	1.00	58ME(B,C)100–20
CAP**6021A**	0.98	1.02	58ME(B,C)100–20
CNPH*4821A**	0.96	1.00	58ME(B,C)100–20
CNPH*6024A**	0.98	1.02	58ME(B,C)100–20
CNPH*6124A**	0.98	1.02	58ME(B,C)100–20
CNPV*4821A**	0.96	1.00	58ME(B,C)100–20
CSPH*4812A**	0.97	1.01	58ME(B,C)100–20
CSPH*6012A**	0.99	1.03	58ME(B,C)100–20
CAP**4824A**	0.96	1.00	58ME(B,C)120–20
CAP**6024A**	0.98	1.02	58ME(B,C)120–20
CNPH*4821A**	0.97	1.01	58ME(B,C)120–20
CNPH*6024A**	0.98	1.02	58ME(B,C)120–20
CNPH*6124A**	0.99	0.99	58ME(B,C)120–20
CNPV*4824A**	0.97	1.01	58ME(B,C)120–20
CNPV*6024A**	0.98	1.02	58ME(B,C)120–20
CNPV*6124A**	0.99	0.99	58ME(B,C)120–20
CNPV*6124A**	1.01	1.01	58ME(B,C)120–20
CSPH*4812A**	0.97	1.01	58ME(B,C)120–20
CSPH*6012A**	0.99	0.99	58ME(B,C)120–20
CAP**4821A**	0.94	1.02	58MV(B,C)080–20
CAP**6021A**	0.96	1.00	58MV(B,C)080–20
CNPH*4821A**	0.95	1.03	58MV(B,C)080–20

DETAILED COOLING CAPACITIES# CONTINUED

25HCC548A30 Outdoor Section With FX4DNF049 Indoor Section

COOLING INDOOR MODEL	CAPACITY	POWER	FURNACE MODEL
CNPH*6024A**	0.96	1.00	58MV(B,C)080–20
CNPH*6124A**	0.97	1.01	58MV(B,C)080–20
CNPV*4821A**	0.95	1.03	58MV(B,C)080–20
CSPH*4812A**	0.96	1.04	58MV(B,C)080–20
CSPH*6012A**	0.97	1.01	58MV(B,C)080–20
CAP**4821A**	0.95	1.03	58MV(B,C)100–20
CAP**6021A**	0.97	1.01	58MV(B,C)100–20
CNPH*4821A**	0.96	1.04	58MV(B,C)100–20
CNPH*6024A**	0.97	1.01	58MV(B,C)100–20
CNPH*6124A**	0.98	1.02	58MV(B,C)100–20
CNPV*4821A**	0.96	1.04	58MV(B,C)100–20
CNPV*6124A**	0.98	1.02	58MV(B,C)100–20
CNPV*6124A**	1.00	1.04	58MV(B,C)100–20
CSPH*4812A**	0.96	1.04	58MV(B,C)100–20
CSPH*6012A**	0.98	1.02	58MV(B,C)100–20
CAP**4824A**	0.95	0.99	58MV(B,C)120–20
CAP**6024A**	0.97	1.01	58MV(B,C)120–20
CNPH*4821A**	0.96	1.00	58MV(B,C)120–20
CNPH*6024A**	0.97	1.01	58MV(B,C)120–20
CNPH*6124A**	0.98	1.02	58MV(B,C)120–20
CNPV*4824A**	0.96	1.00	58MV(B,C)120–20
CNPV*6024A**	0.97	1.01	58MV(B,C)120–20
CNPV*6124A**	0.98	0.98	58MV(B,C)120–20
CNPV*6124A**	0.99	1.01	58MV(B,C)120–20
CSPH*4812A**	0.96	1.00	58MV(B,C)120–20
CSPH*6012A**	0.98	1.02	58MV(B,C)120–20
CAP**4821A**	0.96	1.00	58PH*090–16
CAP**6021A**	0.98	1.02	58PH*090–16
CNPH*4821A**	0.96	1.00	58PH*090–16
CNPH*6024A**	0.98	1.02	58PH*090–16
CNPH*6124A**	0.98	1.02	58PH*090–16
CNPV*4821A**	0.96	1.00	58PH*090–16
CSPH*4812A**	0.97	1.01	58PH*090–16
CSPH*6012A**	0.98	1.02	58PH*090–16
CAP**4821A**	0.95	0.99	58PH*110–20
CAP**6021A**	0.98	0.98	58PH*110–20
CNPH*4821A**	0.96	1.00	58PH*110–20
CNPH*6024A**	0.98	0.98	58PH*110–20
CNPH*6124A**	0.98	0.98	58PH*110–20
CNPV*4821A**	0.96	1.00	58PH*110–20
CSPH*4812A**	0.97	1.01	58PH*110–20
CSPH*6012A**	0.98	0.98	58PH*110–20
CAP**4824A**	0.96	1.00	58PH*135–20
CAP**6024A**	0.98	1.02	58PH*135–20
CNPH*4821A**	0.96	1.00	58PH*135–20
CNPH*6024A**	0.98	1.02	58PH*135–20
CNPH*6124A**	0.98	1.02	58PH*135–20
CNPV*4824A**	0.96	1.00	58PH*135–20
CNPV*6024A**	0.98	1.02	58PH*135–20
CNPV*6124A**	0.99	0.99	58PH*135–20
CSPH*4812A**	0.96	1.00	58PH*135–20
CSPH*6012A**	0.98	1.02	58PH*135–20

See note on pg. 38

DETAILED COOLING CAPACITIES# CONTINUED

EVAPORATOR AIR		CONDENSER ENTERING AIR TEMPERATURES °F (°C)																	
		75 (23.9)			85 (29.4)			95 (35)			105 (40.6)			115 (46.1)			125 (51.7)		
CFM	EWB °F (°C)	Capacity MBtuh†		Total System KW**	Capacity MBtuh†		Total System KW**	Capacity MBtuh†		Total System KW**	Capacity MBtuh†		Total System KW**	Capacity MBtuh†		Total System KW**	Capacity MBtuh†		Total System KW**
		Total	Sens‡		Total	Sens‡		Total	Sens‡		Total	Sens‡		Total	Sens‡		Total	Sens‡	
25HCC560A30 Outdoor Section With FX4DNF061 Indoor Section																			
1750	72 (22.2)	69.17	35.96	3.81	65.83	34.68	4.20	62.32	33.37	4.63	58.60	31.99	5.12	54.63	30.54	5.68	50.41	29.02	6.30
	67 (19.4)	63.19	44.51	3.74	60.19	43.24	4.13	57.00	41.92	4.56	53.63	40.55	5.05	50.02	39.09	5.61	46.18	37.54	6.25
	63 (17.2)††	58.86	42.93	3.69	56.08	41.67	4.08	53.14	40.35	4.51	50.02	38.98	5.00	46.68	37.53	5.56	43.12	35.99	6.21
	62 (16.7)	57.71	52.83	3.68	55.03	51.53	4.07	52.20	50.14	4.50	49.23	48.59	4.99	46.32	46.32	5.56	43.40	43.40	6.21
	57 (13.9)	55.78	55.78	3.66	53.67	53.67	4.05	51.40	51.40	4.49	48.93	48.93	4.99	46.26	46.26	5.56	43.34	43.34	6.21
2000	72 (22.2)	70.36	37.71	3.89	66.90	36.42	4.28	63.21	35.07	4.71	59.35	33.67	5.20	55.24	32.20	5.75	50.87	30.66	6.38
	67 (19.4)	64.35	47.38	3.82	61.20	46.09	4.21	57.88	44.75	4.64	54.36	43.33	5.13	50.63	41.84	5.69	46.66	40.25	6.32
	63 (17.2)††	59.99	45.61	3.77	57.09	44.32	4.15	54.01	42.98	4.59	50.76	41.57	5.08	47.31	40.08	5.64	43.61	38.48	6.28
	62 (16.7)	58.97	56.64	3.76	56.19	55.19	4.15	53.39	53.39	4.58	50.73	50.73	5.08	47.86	47.86	5.65	44.74	44.74	6.30
	57 (13.9)	58.06	58.06	3.75	55.76	55.76	4.14	53.31	53.31	4.58	50.67	50.67	5.08	47.80	47.80	5.65	44.69	44.69	6.29
2250	72 (22.2)	71.26	39.37	3.97	67.65	38.06	4.36	63.86	36.70	4.79	59.89	35.28	5.27	55.65	33.79	5.82	51.19	32.24	6.45
	67 (19.4)	65.22	50.14	3.89	61.95	48.81	4.28	58.50	47.43	4.71	54.89	45.99	5.20	51.06	44.45	5.76	47.00	42.79	6.39
	63 (17.2)††	60.84	48.17	3.84	57.83	46.84	4.23	54.65	45.48	4.66	51.31	44.03	5.15	47.75	42.48	5.71	43.99	40.82	6.35
	62 (16.7)	60.05	60.05	3.84	57.56	57.56	4.23	54.95	54.95	4.67	52.14	52.14	5.16	49.11	49.11	5.73	45.81	45.81	6.38
	57 (13.9)	59.92	59.92	3.84	57.48	57.48	4.23	54.88	54.88	4.67	52.08	52.08	5.16	49.05	49.05	5.73	45.76	45.76	6.38

COOLING INDOOR MODEL	CAPACITY	POWER	FURNACE MODEL
*FX4DN(B,F)061	1.00	1.00	
FB4CNF060	0.97	1.06	
FE4ANB006	0.99	0.99	
FV4BNB006	0.99	0.99	
FV4CNB006	0.99	0.99	
FX4CN(B,F)060	0.99	1.03	
FY4ANB060	0.98	1.07	
FY5BNB060	0.98	1.07	
CAP**6021A**	0.97	1.06	
CAP**6024A**	0.97	1.06	
CAP**6025A**	0.97	1.06	
CNPH*6024A**	0.97	1.06	
CNPH*6124A**	0.98	1.07	
CNPV*6024A**	0.97	1.06	
CNPV*6124A**	0.99	1.08	
CSPH*6012A**	0.97	1.06	
CAP**6021A**	0.97	1.06	58CV(A,X)110–20
CNPH*6024A**	0.97	1.06	58CV(A,X)110–20
CNPH*6124A**	0.98	1.07	58CV(A,X)110–20
CSPH*6012A**	0.98	1.07	58CV(A,X)110–20
CAP**6024A**	0.97	1.01	58CV(A,X)135–22
CNPH*6024A**	0.97	1.01	58CV(A,X)135–22

COOLING INDOOR MODEL	CAPACITY	POWER	FURNACE MODEL
CNPH*6124A**	0.98	1.02	58CV(A,X)135–22
CNPV*6024A**	0.97	1.01	58CV(A,X)135–22
CNPV*6124A**	0.99	1.03	58CV(A,X)135–22
CSPH*6012A**	0.98	1.02	58CV(A,X)135–22
CAP**6024A**	0.98	1.02	58CV(A,X)155–22
CNPH*6024A**	0.98	1.02	58CV(A,X)155–22
CNPH*6124A**	0.98	1.02	58CV(A,X)155–22
CNPV*6024A**	0.98	1.02	58CV(A,X)155–22
CNPV*6124A**	0.99	1.03	58CV(A,X)155–22
CSPH*6012A**	0.98	1.02	58CV(A,X)155–22
CNPH*6024A**	0.98	1.07	58HDV080––20
CNPH*6124A**	1.00	1.09	58HDV080––20
CSPH*6012A**	0.98	1.07	58HDV080––20
CAP**6025A**	0.97	1.06	58HDV100––20
CNPH*6024A**	0.97	1.06	58HDV100––20
CNPH*6124A**	1.00	1.09	58HDV100––20
CNPV*6024A**	0.97	1.06	58HDV100––20
CNPV*6124A**	1.01	1.10	58HDV100––20
CSPH*6012A**	0.97	1.06	58HDV100––20
CNPH*6024A**	0.96	1.05	58ME(B,C)080–16
CSPH*6012A**	0.97	1.06	58ME(B,C)080–16
CAP**6021A**	0.97	1.01	58ME(B,C)100–20

COOLING INDOOR MODEL	CAPACITY	POWER	FURNACE MODEL
CNPH*6024A**	0.97	1.01	58ME(B,C)100–20
CNPH*6124A**	0.97	1.01	58ME(B,C)100–20
CSPH*6012A**	0.98	1.02	58ME(B,C)100–20
CAP**6024A**	0.97	1.01	58ME(B,C)120–20
CNPH*6024A**	0.97	1.01	58ME(B,C)120–20
CNPH*6124A**	0.98	1.02	58ME(B,C)120–20
CNPV*6024A**	0.97	1.01	58ME(B,C)120–20
CNPV*6124A**	0.99	1.03	58ME(B,C)120–20
CSPH*6012A**	0.98	1.02	58ME(B,C)120–20
CNPV*6124A**	0.98	1.04	58MV(B,C)120–20
CSPH*6012A**	0.97	1.06	58MV(B,C)120–20
CAP**6021A**	0.97	1.01	58PH*110–20
CNPH*6024A**	0.97	1.01	58PH*110–20
CNPH*6124A**	0.98	1.02	58PH*110–20
CSPH*6012A**	0.98	1.02	58PH*110–20
CAP**6024A**	0.97	1.01	58PH*135–20
CNPH*6024A**	0.97	1.01	58PH*135–20
CNPH*6124A**	0.97	1.01	58PH*135–20
CNPV*6024A**	0.97	1.01	58PH*135–20
CNPV*6124A**	0.99	1.03	58PH*135–20
CSPH*6012A**	0.98	1.02	58PH*135–20

† Total and sensible capacities are net capacities. Blower motor heat has been subtracted.

‡ Sensible capacities shown are based on 80°F (27°C) entering air at the indoor coil. For sensible capacities at other than 80°F (27°C), deduct 835 Btuh (245 kW) per 1000 CFM (480 L/S) of indoor coil air for each degree below 80°F (27°C), or add 835 Btuh (245 kW) per 1000 CFM (480 L/S) of indoor coil air per degree above 80°F (27°C).

Detailed cooling capacities are based on indoor and outdoor unit at the same elevation per AHRI standard 210/240–2008. If additional tubing length and/or indoor unit is located above outdoor unit, a slight variation in capacity may occur.

HEAT PUMP HEATING PERFORMANCE

INDOOR AIR		OUTDOOR COIL ENTERING AIR TEMPERATURES °F (°C)																							
		−3 (−19.4)			7 (−13.9)			17 (−8.3)			27 (−2.8)			37 (2.8)			47 (8.3)			57 (13.9)			67 (19.4)		
EDB °F (°C)	CFM	Capacity MBtuh		Total Sys. KW†	Capacity MBtuh		Total Sys. KW†	Capacity MBtuh		Total Sys. KW†	Capacity MBtuh		Total Sys. KW†	Capacity MBtuh		Total Sys. KW†	Capacity MBtuh		Total Sys. KW†	Capacity MBtuh		Total Sys. KW†	Capacity MBtuh		Total Sys. KW†
		Total	Integ*		Total	Integ*		Total	Integ*		Total	Integ*		Total	Integ*		Total	Integ*		Total	Integ*		Total	Integ*	
25HCC518A30 Outdoor Section With FX4DNF019 Indoor Section																									
65 (18.3)	525	5.13	4.72	1.02	7.34	6.75	1.07	9.76	8.90	1.12	12.54	11.13	1.18	15.15	13.78	1.24	18.08	18.08	1.32	21.28	21.28	1.41	24.15	24.15	1.48
	600	5.22	4.80	1.02	7.46	6.85	1.07	9.91	9.03	1.11	12.68	11.27	1.17	15.35	13.97	1.22	18.35	18.35	1.29	21.43	21.43	1.35	24.11	24.11	1.42
	675	5.30	4.87	1.02	7.55	6.94	1.07	10.04	9.15	1.11	12.80	11.37	1.16	15.51	14.12	1.20	18.56	18.56	1.27	21.37	21.37	1.31	23.93	23.93	1.37
70 (21.1)	525	4.84	4.45	1.07	7.04	6.47	1.12	9.43	8.60	1.18	12.28	10.90	1.24	14.86	13.52	1.31	17.74	17.74	1.38	20.89	20.89	1.48	23.84	23.84	1.55
	600	4.92	4.53	1.07	7.15	6.57	1.12	9.58	8.74	1.17	12.44	11.04	1.23	15.05	13.70	1.28	18.00	18.00	1.35	21.15	21.15	1.42	23.87	23.87	1.49
	675	4.99	4.59	1.07	7.25	6.66	1.12	9.71	8.85	1.16	12.56	11.16	1.21	15.21	13.84	1.26	18.21	18.21	1.33	21.20	21.20	1.39	23.75	23.75	1.45
75 (23.9)	525	4.50	4.14	1.11	6.70	6.16	1.17	9.09	8.29	1.23	11.98	10.64	1.30	14.56	13.25	1.37	17.39	17.39	1.45	20.50	20.50	1.55	23.52	23.52	1.63
	600	4.59	4.22	1.12	6.82	6.27	1.17	9.24	8.42	1.22	12.15	10.79	1.29	14.75	13.43	1.34	17.65	17.65	1.42	20.82	20.82	1.50	23.58	23.58	1.57
	675	4.66	4.29	1.12	6.92	6.36	1.17	9.36	8.54	1.22	12.29	10.91	1.27	14.91	13.57	1.33	17.86	17.86	1.39	20.95	20.95	1.46	23.53	23.53	1.52

HEATING INDOOR MODEL	CAPACITY	POWER	FURNACE MODEL
*FX4DNF019	1.00	1.00	
FB4CNF018	1.01	1.05	
FB4CNF024	1.01	1.05	
FE4ANF002	1.00	1.02	
FF1ENP018	1.03	1.15	
FF1ENP019	1.01	1.05	
FF1ENP024	1.03	1.13	
FF1ENP025	1.01	1.02	
FV4BNF002	1.00	1.02	
FV4CNF002	1.00	1.02	
FX4CNF018	1.01	1.05	
FX4CNF024	1.01	1.03	
FX4DNF025	1.00	1.00	
FY4ANF018	1.03	1.14	
FY4ANF024	1.03	1.15	
FY5BNF018	1.03	1.10	
FY5BNF024	1.03	1.09	
CAP**1814A**	1.03	1.15	
CAP**2414A**	1.03	1.12	
CAP**2417A**	1.03	1.12	
CNPF*2418A**	1.03	1.10	
CNPH*2417A**	1.03	1.10	
CNPV*1814A**	1.03	1.12	
CNPV*1917A**	1.03	1.10	
CNPV*2414A**	1.03	1.10	
CNPV*2417A**	1.03	1.10	
CSPH*2412A**	1.03	1.10	
CAP**1814A**	0.98	1.07	58CV(A,X)070−12
CAP**2414A**	0.99	1.05	58CV(A,X)070−12
CNPH*2417A**	0.99	1.04	58CV(A,X)070−12
CNPV*1814A**	0.98	1.04	58CV(A,X)070−12
CNPV*2414A**	0.99	1.04	58CV(A,X)070−12
CSPH*2412A**	0.99	1.04	58CV(A,X)070−12
CAP**2417A**	0.99	1.04	58CV(A,X)090−16
CNPH*2417A**	0.99	1.03	58CV(A,X)090−16
CNPV*1917A**	1.00	1.03	58CV(A,X)090−16
CNPV*2417A**	0.99	1.03	58CV(A,X)090−16
CSPH*2412A**	0.99	1.04	58CV(A,X)090−16
CNPH*2417A**	1.03	1.02	58HDV040−−12
CSPH*2412A**	1.03	1.03	58HDV040−−12
CNPH*2417A**	1.03	1.02	58HDV060−−12
CSPH*2412A**	1.03	1.03	58HDV060−−12
CAP**2417A**	1.01	1.01	58ME(B,C)060−12
CNPH*2417A**	1.01	1.02	58ME(B,C)060−12

HEATING INDOOR MODEL	CAPACITY	POWER	FURNACE MODEL
CNPV*1917A**	1.01	0.99	58ME(B,C)060−12
CNPV*2417A**	1.01	1.02	58ME(B,C)060−12
CSPH*2412A**	0.99	1.03	58ME(B,C)060−12
CAP**2417A**	1.01	0.99	58MEB040−12
CNPH*2417A**	1.01	1.00	58MEB040−12
CNPV*1917A**	1.01	0.97	58MEB040−12
CNPV*2417A**	1.01	1.00	58MEB040−12
CSPH*2412A**	1.01	1.01	58MEB040−12
CAP**2417A**	0.99	1.05	58MV(B,C)060−14
CNPH*2417A**	0.99	1.04	58MV(B,C)060−14
CNPV*1917A**	1.00	1.03	58MV(B,C)060−14
CNPV*2417A**	0.99	1.04	58MV(B,C)060−14
CSPH*2412A**	0.99	1.04	58MV(B,C)060−14
CNPH*2417A**	0.99	1.04	58MV(B,C)080−14
CSPH*2412A**	0.99	1.04	58MV(B,C)080−14
CNPH*2417A**	0.99	1.04	58MVB040−14
CSPH*2412A**	0.99	1.04	58MVB040−14
CAP**1814A**	1.00	1.06	58PH*045−08
CAP**2414A**	1.01	1.03	58PH*045−08
CNPH*2417A**	1.01	1.03	58PH*045−08
CNPV*1814A**	1.00	1.04	58PH*045−08
CNPV*2414A**	1.01	1.03	58PH*045−08
CSPH*2412A**	1.01	1.04	58PH*045−08

See note on pg. 50

HEAT PUMP HEATING PERFORMANCE

INDOOR AIR		OUTDOOR COIL ENTERING AIR TEMPERATURES °F (°C)																							
		−3 (−19.4)			7 (−13.9)			17 (−8.3)			27 (−2.8)			37 (2.8)			47 (8.3)			57 (13.9)			67 (19.4)		
EDB °F (°C)	CFM	Capacity MBtuh		Total Sys. KW†	Capacity MBtuh		Total Sys. KW†	Capacity MBtuh		Total Sys. KW†	Capacity MBtuh		Total Sys. KW†	Capacity MBtuh		Total Sys. KW†	Capacity MBtuh		Total Sys. KW†	Capacity MBtuh		Total Sys. KW†	Capacity MBtuh		Total Sys. KW†
		Total	Integ*		Total	Integ*		Total	Integ*		Total	Integ*		Total	Integ*		Total	Integ*		Total	Integ*		Total	Integ*	
25HCC524A30 Outdoor Section With FX4DNF025 Indoor Section																									
65 (18.3)	700	8.38	7.71	1.36	11.07	10.18	1.44	14.28	13.02	1.52	17.14	15.23	1.57	20.39	18.56	1.63	24.08	24.08	1.72	28.29	28.29	1.86	32.83	32.83	2.02
	800	8.52	7.83	1.36	11.24	10.33	1.44	14.45	13.17	1.50	17.34	15.40	1.54	20.64	18.79	1.60	24.41	24.41	1.68	28.68	28.68	1.81	32.90	32.90	1.94
	900	8.64	7.95	1.37	11.39	10.47	1.44	14.59	13.30	1.49	17.50	15.54	1.53	20.85	18.98	1.58	24.67	24.67	1.66	28.96	28.96	1.77	32.79	32.79	1.88
70 (21.1)	700	7.98	7.35	1.42	10.69	9.83	1.51	13.97	12.74	1.59	16.84	14.96	1.65	20.05	18.24	1.71	23.68	23.68	1.81	27.81	27.81	1.95	32.46	32.46	2.13
	800	8.12	7.47	1.43	10.86	9.98	1.51	14.15	12.90	1.58	17.04	15.13	1.63	20.30	18.47	1.68	24.00	24.00	1.77	28.21	28.21	1.90	32.56	32.56	2.04
	900	8.24	7.58	1.43	11.00	10.11	1.51	14.30	13.04	1.57	17.21	15.28	1.61	20.50	18.66	1.66	24.26	24.26	1.74	28.53	28.53	1.87	32.53	32.53	1.98
75 (23.9)	700	7.57	6.97	1.49	10.29	9.46	1.59	13.23	12.06	1.66	16.55	14.70	1.73	19.70	17.93	1.80	23.28	23.28	1.90	27.36	27.36	2.04	31.99	31.99	2.24
	800	7.71	7.09	1.50	10.46	9.61	1.58	13.44	12.26	1.65	16.74	14.87	1.71	19.94	18.15	1.77	23.59	23.59	1.86	27.76	27.76	1.99	32.27	32.27	2.15
	900	7.82	7.19	1.50	10.60	9.74	1.58	13.66	12.45	1.64	16.91	15.02	1.70	20.15	18.33	1.75	23.85	23.85	1.83	28.05	28.05	1.96	32.25	32.25	2.08

HEATING INDOOR MODEL	CAPACITY	POWER	FURNACE MODEL
*FX4DNF025	1.00	1.00	
FB4CNF024	1.00	1.04	
FB4CNF030	1.00	1.00	
FE4AN(B,F)003	1.00	1.00	
FE4ANF002	1.00	1.00	
FF1ENP024	1.00	1.08	
FF1ENP025	1.00	1.02	
FF1ENP030	1.00	1.08	
FF1ENP031	1.00	1.03	
FF1ENP037	1.00	1.01	
FV4BN(B,F)003	1.00	1.00	
FV4BNF002	1.00	1.00	
FV4CN(B,F)003	1.00	1.00	
FV4CNF002	1.00	1.00	
FX4CNF024	1.00	1.03	
FX4CNF030	1.00	1.00	
FX4DN(B,F)031	1.00	1.00	
FY4ANF024	1.00	1.09	
FY4ANF030	1.00	1.06	
FY5BNF024	1.00	1.04	
FY5BNF030	1.00	1.04	
CAP**2414A**	1.00	1.06	
CAP**2417A**	1.00	1.06	
CAP**3014A**	1.00	1.06	
CAP**3017A**	1.00	1.06	
CNPF*2418A**	1.00	1.04	
CNPH*2417A**	1.00	1.04	
CNPH*3017A**	1.00	1.05	
CNPV*2414A**	1.00	1.04	
CNPV*2417A**	1.00	1.04	
CNPV*3014A**	1.00	1.05	
CNPV*3017A**	1.00	1.05	
CNPV*3117A**	1.00	1.01	
CSPH*2412A**	1.00	1.04	
CSPH*3012A**	1.00	1.05	
CAP**2417A**	1.00	1.00	58ME(B,C)080−12
CAP**3017A**	1.00	0.99	58ME(B,C)080−12
CNPH*2417A**	1.00	1.00	58ME(B,C)080−12
CNPH*3017A**	1.00	0.99	58ME(B,C)080−12
CNPV*2417A**	1.00	1.00	58ME(B,C)080−12
CNPV*3017A**	1.00	0.99	58ME(B,C)080−12
CNPV*3117A**	1.00	0.94	58ME(B,C)080−12
CSPH*2412A**	1.00	1.01	58ME(B,C)080−12
CSPH*3012A**	1.00	1.00	58ME(B,C)080−12

HEATING INDOOR MODEL	CAPACITY	POWER	FURNACE MODEL
CAP**2414A**	1.00	1.03	58PH*045−08
CAP**3014A**	1.00	1.02	58PH*045−08
CNPH*2417A**	1.00	1.02	58PH*045−08
CNPH*3017A**	1.00	1.01	58PH*045−08
CNPV*2414A**	1.00	1.02	58PH*045−08
CNPV*3014A**	1.00	1.03	58PH*045−08
CSPH*2412A**	1.00	1.02	58PH*045−08
CSPH*3012A**	1.00	1.02	58PH*045−08
CAP**2414A**	1.00	1.05	58CV(A,X)070−12
CAP**3014A**	1.00	1.04	58CV(A,X)070−12
CNPH*2417A**	1.00	1.03	58CV(A,X)070−12
CNPH*3017A**	1.00	1.03	58CV(A,X)070−12
CNPV*2414A**	1.00	1.03	58CV(A,X)070−12
CNPV*3014A**	1.00	1.04	58CV(A,X)070−12
CSPH*2412A**	1.00	1.03	58CV(A,X)070−12
CSPH*3012A**	1.00	1.04	58CV(A,X)070−12
CAP**2417A**	1.00	1.04	58CV(A,X)090−16
CAP**3017A**	1.00	1.03	58CV(A,X)090−16
CNPH*2417A**	1.00	1.02	58CV(A,X)090−16
CNPH*3017A**	1.00	1.02	58CV(A,X)090−16
CNPV*2417A**	1.00	1.02	58CV(A,X)090−16
CNPV*3017A**	1.00	1.02	58CV(A,X)090−16
CNPV*3117A**	1.00	0.98	58CV(A,X)090−16
CSPH*2412A**	1.00	1.02	58CV(A,X)090−16
CSPH*3012A**	1.00	1.03	58CV(A,X)090−16
CNPH*2417A**	1.00	1.02	58CV(A,X)110−20
CNPH*3017A**	1.00	1.03	58CV(A,X)110−20
CSPH*2412A**	1.00	1.03	58CV(A,X)110−20
CSPH*3012A**	1.00	1.03	58CV(A,X)110−20
CNPH*2417A**	1.00	1.02	58CV(A,X)135−22
CNPH*3017A**	1.00	1.02	58CV(A,X)135−22
CSPH*2412A**	1.00	1.02	58CV(A,X)135−22
CSPH*3012A**	1.00	1.03	58CV(A,X)135−22
CNPH*2417A**	1.00	1.02	58CV(A,X)155−22
CNPH*3017A**	1.00	1.02	58CV(A,X)155−22
CSPH*2412A**	1.00	1.02	58CV(A,X)155−22
CSPH*3012A**	1.00	1.02	58CV(A,X)155−22
CAP**2417A**	1.00	0.99	58ME(B,C)060−12
CAP**3017A**	1.00	0.98	58ME(B,C)060−12
CNPH*2417A**	1.00	0.99	58ME(B,C)060−12
CNPH*3017A**	1.00	0.98	58ME(B,C)060−12
CNPV*2417A**	1.00	0.99	58ME(B,C)060−12
CNPV*3017A**	1.00	0.98	58ME(B,C)060−12
CNPV*3117A**	1.00	0.93	58ME(B,C)060−12

HEATING INDOOR MODEL	CAPACITY	POWER	FURNACE MODEL
CSPH*2412A**	1.00	1.00	58ME(B,C)060−12
CSPH*3012A**	1.00	0.98	58ME(B,C)060−12
CAP**2417A**	1.00	1.00	58MEB040−12
CAP**3017A**	1.00	0.98	58MEB040−12
CNPH*2417A**	1.00	0.99	58MEB040−12
CNPH*3017A**	1.00	0.98	58MEB040−12
CNPV*2417A**	1.00	0.99	58MEB040−12
CNPV*3017A**	1.00	0.98	58MEB040−12
CNPV*3117A**	1.00	0.93	58MEB040−12
CSPH*2412A**	1.00	1.00	58MEB040−12
CSPH*3012A**	1.00	0.99	58MEB040−12
CAP**2417A**	1.00	1.01	58MV(B,C)060−14
CAP**3017A**	1.00	1.00	58MV(B,C)060−14
CNPH*2417A**	1.00	1.00	58MV(B,C)060−14
CNPH*3017A**	1.00	1.00	58MV(B,C)060−14
CNPV*2417A**	1.00	1.00	58MV(B,C)060−14
CNPV*3017A**	1.00	1.00	58MV(B,C)060−14
CNPV*3117A**	1.00	0.96	58MV(B,C)060−14
CSPH*2412A**	1.00	1.00	58MV(B,C)060−14
CSPH*3012A**	1.00	1.00	58MV(B,C)060−14
CNPH*2417A**	1.00	1.03	58MV(B,C)080−14
CNPH*3017A**	1.00	1.03	58MV(B,C)080−14
CSPH*2412A**	1.00	1.03	58MV(B,C)080−14
CSPH*3012A**	1.00	1.03	58MV(B,C)080−14
CNPH*2417A**	1.00	1.04	58MV(B,C)080−20
CNPH*3017A**	1.00	1.05	58MV(B,C)080−20
CSPH*2412A**	1.00	1.05	58MV(B,C)080−20
CSPH*3012A**	1.00	1.05	58MV(B,C)080−20
CNPH*2417A**	1.00	1.02	58MV(B,C)100−20
CNPH*3017A**	1.00	1.03	58MV(B,C)100−20
CSPH*2412A**	1.00	1.03	58MV(B,C)100−20
CSPH*3012A**	1.00	1.03	58MV(B,C)100−20
CNPH*2417A**	1.00	1.01	58MV(B,C)120−20
CNPH*3017A**	1.00	1.02	58MV(B,C)120−20
CSPH*2412A**	1.00	1.01	58MV(B,C)120−20
CSPH*3012A**	1.00	1.02	58MV(B,C)120−20
CNPH*2417A**	1.00	1.02	58MVB040−14
CNPH*3017A**	1.00	1.03	58MVB040−14
CSPH*2412A**	1.00	1.03	58MVB040−14
CSPH*3012A**	1.00	1.03	58MVB040−14
CAP**3619A**	1.00	1.01	58HDV040− −12
CNPH*2417A**	1.00	1.02	58HDV040− −12
CNPH*3017A**	1.00	1.02	58HDV040− −12
CNPH*3117A**	1.00	0.97	58HDV040− −12

HEAT PUMP HEATING PERFORMANCE

25HCC524A30 Outdoor Section With FX4DNF025 Indoor Section

HEATING INDOOR MODEL	CAPACITY	POWER	FURNACE MODEL
CSPH*2412A**	1.00	1.03	58HDV040– –12
CSPH*3012A**	1.00	1.02	58HDV040– –12
CAP**3619A**	1.00	0.99	58HDV060– –12
CNPH*2417A**	1.00	1.01	58HDV060– –12
CNPH*3017A**	1.00	1.00	58HDV060– –12
CNPH*3117A**	1.00	0.95	58HDV060– –12
CSPH*2412A**	1.00	1.02	58HDV060– –12
CSPH*3012A**	1.00	1.00	58HDV060– –12

See note on pg. 50

HEAT PUMP HEATING PERFORMANCE

INDOOR AIR		OUTDOOR COIL ENTERING AIR TEMPERATURES °F (°C)																							
		−3 (−19.4)			7 (−13.9)			17 (−8.3)			27 (−2.8)			37 (2.8)			47 (8.3)			57 (13.9)			67 (19.4)		
EDB °F (°C)	CFM	Capacity MBtuh		Total Sys. KW†	Capacity MBtuh		Total Sys. KW†	Capacity MBtuh		Total Sys. KW†	Capacity MBtuh		Total Sys. KW†	Capacity MBtuh		Total Sys. KW†	Capacity MBtuh		Total Sys. KW†	Capacity MBtuh		Total Sys. KW†	Capacity MBtuh		Total Sys. KW†
		Total	Integ*		Total	Integ*		Total	Integ*		Total	Integ*		Total	Integ*		Total	Integ*		Total	Integ*		Total	Integ*	
25HCC530A30 Outdoor Section With FX4DNF031 Indoor Section																									
65 (18.3)	875	9.76	8.98	1.59	13.14	12.08	1.66	16.80	15.32	1.73	21.11	18.75	1.83	25.07	22.82	1.91	29.50	29.50	2.02	34.45	34.45	2.14	39.00	39.00	2.24
	1000	9.94	9.15	1.60	13.35	12.27	1.66	17.06	15.56	1.73	21.33	18.94	1.81	25.37	23.08	1.89	29.87	29.87	1.98	34.61	34.61	2.07	38.97	38.97	2.17
	1125	10.10	9.29	1.61	13.53	12.44	1.67	17.28	15.75	1.73	21.54	19.13	1.80	25.61	23.31	1.87	30.18	30.18	1.96	34.65	34.65	2.03	38.83	38.83	2.13
70 (21.1)	875	9.22	8.49	1.66	12.63	11.61	1.74	16.30	14.86	1.82	20.75	18.43	1.92	24.68	22.46	2.01	29.04	29.04	2.12	33.93	33.93	2.25	38.55	38.55	2.35
	1000	9.40	8.65	1.67	12.84	11.80	1.74	16.55	15.09	1.81	20.99	18.64	1.90	24.96	22.71	1.98	29.40	29.40	2.08	34.27	34.27	2.18	38.59	38.59	2.28
	1125	9.56	8.80	1.69	13.03	11.97	1.75	16.77	15.29	1.81	21.18	18.81	1.89	25.20	22.93	1.97	29.70	29.70	2.06	34.31	34.31	2.14	38.50	38.50	2.23
75 (23.9)	875	8.65	7.96	1.74	12.09	11.11	1.82	15.76	14.37	1.90	20.33	18.05	2.01	24.28	22.09	2.11	28.57	28.57	2.22	33.39	33.39	2.36	38.09	38.09	2.46
	1000	8.83	8.12	1.75	12.30	11.30	1.82	16.02	14.60	1.90	20.59	18.29	2.00	24.56	22.35	2.08	28.93	28.93	2.18	33.82	33.82	2.29	38.19	38.19	2.39
	1125	8.98	8.26	1.76	12.48	11.47	1.83	16.23	14.80	1.90	20.81	18.48	1.99	24.80	22.56	2.06	29.22	29.22	2.16	33.98	33.98	2.25	38.16	38.16	2.34

HEATING INDOOR MODEL	CAPACITY	POWER	FURNACE MODEL
*FX4DN(B,F)031	1.00	1.00	
FB4CNF030	1.01	1.03	
FB4CNF036	1.01	1.03	
FE4AN(B,F)003	0.99	1.00	
FE4AN(B,F)005	0.99	0.95	
FE4ANF002	0.99	1.01	
FF1ENP030	1.02	1.11	
FF1ENP031	1.01	1.04	
FF1ENP036	1.02	1.09	
FF1ENP037	1.01	1.05	
FV4BN(B,F)003	0.99	1.00	
FV4BN(B,F)005	0.99	0.95	
FV4BNF002	0.99	1.01	
FV4CN(B,F)003	0.99	1.00	
FV4CN(B,F)005	0.99	0.95	
FV4CNF002	0.99	1.01	
FX4CN(B,F)036	1.01	1.04	
FX4CNF030	1.01	1.03	
FX4DN(B,F)037	1.01	0.98	
FY4ANF030	1.02	1.09	
FY4ANF036	1.03	1.10	
FY5BNF030	1.01	1.04	
FY5BNF036	1.02	1.07	
CAP**3014A**	1.03	1.10	
CAP**3017A**	1.03	1.10	
CAP**3614A**	1.03	1.09	
CAP**3617A**	1.03	1.09	
CAP**3619A**	1.03	1.09	
CAP**3621A**	1.03	1.09	
CNPF*3618A**	1.03	1.10	
CNPH*3017A**	1.03	1.10	
CNPH*3617A**	1.03	1.10	
CNPV*3014A**	1.03	1.10	
CNPV*3017A**	1.03	1.10	
CNPV*3117A**	1.04	1.06	
CNPV*3617A**	1.03	1.10	
CNPV*3621A**	1.03	1.10	
CNPV*3717A**	1.04	1.04	
CSPH*3012A**	1.03	1.09	
CSPH*3612A**	1.03	1.06	
CAP**3014A**	0.99	1.04	58CV(A,X)070−12
CAP**3614A**	0.99	1.04	58CV(A,X)070−12
CNPH*3017A**	0.99	1.04	58CV(A,X)070−12
CNPH*3617A**	0.99	1.04	58CV(A,X)070−12

HEATING INDOOR MODEL	CAPACITY	POWER	FURNACE MODEL
CNPV*3014A**	0.99	1.04	58CV(A,X)070−12
CSPH*3012A**	0.99	1.04	58CV(A,X)070−12
CSPH*3612A**	1.00	1.01	58CV(A,X)070−12
CAP**3017A**	0.99	1.02	58CV(A,X)090−16
CAP**3617A**	0.99	1.02	58CV(A,X)090−16
CNPH*3017A**	0.99	1.02	58CV(A,X)090−16
CNPH*3617A**	0.99	1.02	58CV(A,X)090−16
CNPV*3017A**	0.99	1.02	58CV(A,X)090−16
CNPV*3117A**	1.00	0.99	58CV(A,X)090−16
CNPV*3617A**	0.99	1.02	58CV(A,X)090−16
CNPV*3717A**	1.00	0.97	58CV(A,X)090−16
CSPH*3012A**	0.99	1.03	58CV(A,X)090−16
CSPH*3612A**	0.99	1.00	58CV(A,X)090−16
CAP**3621A**	0.99	1.01	58CV(A,X)110−20
CNPH*3017A**	0.99	1.03	58CV(A,X)110−20
CNPH*3617A**	0.99	1.02	58CV(A,X)110−20
CNPV*3621A**	0.99	1.02	58CV(A,X)110−20
CSPH*3012A**	0.99	1.03	58CV(A,X)110−20
CSPH*3612A**	0.99	0.99	58CV(A,X)110−20
CNPH*3017A**	0.99	1.02	58CV(A,X)135−22
CNPH*3617A**	0.99	1.02	58CV(A,X)135−22
CSPH*3012A**	0.99	1.02	58CV(A,X)135−22
CSPH*3612A**	0.99	0.99	58CV(A,X)135−22
CNPH*3017A**	0.99	1.02	58CV(A,X)155−22
CNPH*3617A**	0.99	1.02	58CV(A,X)155−22
CSPH*3012A**	0.99	1.02	58CV(A,X)155−22
CSPH*3612A**	0.99	0.99	58CV(A,X)155−22
CAP**3619A**	1.01	1.05	58HDV040−−12
CAP**3619A**	1.01	1.05	58HDV040−−12
CNPH*3017A**	1.01	1.06	58HDV040−−12
CNPH*3117A**	1.01	1.02	58HDV040−−12
CNPH*3617A**	1.01	1.06	58HDV040−−12
CSPH*3012A**	1.01	1.07	58HDV040−−12
CSPH*3612A**	1.01	1.03	58HDV040−−12
CAP**3619A**	1.01	1.04	58HDV060−−12
CAP**3619A**	1.00	1.03	58HDV060−−12
CNPH*3017A**	1.01	1.05	58HDV060−−12
CNPH*3117A**	1.02	1.01	58HDV060−−12
CNPH*3617A**	1.01	1.05	58HDV060−−12
CSPH*3012A**	1.01	1.05	58HDV060−−12
CSPH*3612A**	1.01	1.01	58HDV060−−12
CAP**3017A**	1.00	1.01	58ME(B,C)060−12
CAP**3617A**	1.00	1.01	58ME(B,C)060−12
CNPH*3017A**	1.00	1.02	58ME(B,C)060−12

HEATING INDOOR MODEL	CAPACITY	POWER	FURNACE MODEL
CNPH*3617A**	1.00	1.02	58ME(B,C)060−12
CNPV*3017A**	1.00	1.02	58ME(B,C)060−12
CNPV*3117A**	1.01	0.98	58ME(B,C)060−12
CNPV*3617A**	1.00	1.02	58ME(B,C)060−12
CNPV*3717A**	1.01	0.95	58ME(B,C)060−12
CSPH*3012A**	1.00	1.02	58ME(B,C)060−12
CSPH*3612A**	1.01	0.98	58ME(B,C)060−12
CAP**3017A**	0.99	1.01	58ME(B,C)080−12
CAP**3617A**	1.00	1.01	58ME(B,C)080−12
CNPH*3017A**	0.99	1.01	58ME(B,C)080−12
CNPH*3617A**	0.99	1.01	58ME(B,C)080−12
CNPV*3017A**	0.99	1.01	58ME(B,C)080−12
CNPV*3117A**	1.01	0.98	58ME(B,C)080−12
CNPV*3617A**	0.99	1.01	58ME(B,C)080−12
CNPV*3717A**	1.01	0.95	58ME(B,C)080−12
CSPH*3012A**	0.99	1.02	58ME(B,C)080−12
CSPH*3612A**	1.01	0.99	58ME(B,C)080−12
CAP**3017A**	1.00	1.01	58ME(B,C)080−16
CAP**3617A**	1.01	1.01	58ME(B,C)080−16
CNPH*3017A**	1.00	1.01	58ME(B,C)080−16
CNPH*3617A**	1.01	1.02	58ME(B,C)080−16
CNPV*3017A**	1.00	1.01	58ME(B,C)080−16
CNPV*3117A**	1.01	0.97	58ME(B,C)080−16
CNPV*3617A**	1.01	1.02	58ME(B,C)080−16
CNPV*3717A**	1.01	0.95	58ME(B,C)080−16
CSPH*3012A**	1.00	1.02	58ME(B,C)080−16
CSPH*3612A**	1.01	0.99	58ME(B,C)080−16
CAP**3017A**	0.99	1.01	58MEB040−12
CAP**3617A**	1.00	1.01	58MEB040−12
CNPH*3017A**	0.99	1.01	58MEB040−12
CNPH*3617A**	0.99	1.01	58MEB040−12
CNPV*3017A**	0.99	1.01	58MEB040−12
CNPV*3117A**	1.01	0.97	58MEB040−12
CNPV*3617A**	0.99	1.01	58MEB040−12
CNPV*3717A**	1.01	0.95	58MEB040−12
CSPH*3012A**	0.99	1.01	58MEB040−12
CSPH*3612A**	1.01	0.99	58MEB040−12
CAP**3017A**	0.99	1.02	58MV(B,C)060−14
CAP**3617A**	0.99	1.02	58MV(B,C)060−14
CNPH*3017A**	0.99	1.02	58MV(B,C)060−14
CNPH*3617A**	0.99	1.02	58MV(B,C)060−14
CNPV*3017A**	0.99	1.02	58MV(B,C)060−14
CNPV*3117A**	1.00	0.99	58MV(B,C)060−14
CNPV*3617A**	0.99	1.02	58MV(B,C)060−14

HEAT PUMP HEATING PERFORMANCE

25HCC530A30 Outdoor Section With FX4DNF031 Indoor Section

HEATING INDOOR MODEL	CAPACITY	POWER	FURNACE MODEL
CNPV*3717A**	1.01	0.96	58MV(B,C)060–14
CSPH*3012A**	0.99	1.02	58MV(B,C)060–14
CSPH*3612A**	1.00	0.99	58MV(B,C)060–14
CAP**3621A**	0.99	1.03	58MV(B,C)080–14
CNPH*3017A**	0.99	1.04	58MV(B,C)080–14
CNPH*3617A**	0.99	1.04	58MV(B,C)080–14
CNPV*3621A**	0.99	1.04	58MV(B,C)080–14
CSPH*3012A**	0.99	1.04	58MV(B,C)080–14
CSPH*3612A**	0.99	1.01	58MV(B,C)080–14
CAP**3621A**	0.99	1.02	58MV(B,C)080–20
CNPH*3017A**	0.99	1.03	58MV(B,C)080–20
CNPH*3617A**	0.99	1.03	58MV(B,C)080–20
CNPV*3621A**	0.99	1.03	58MV(B,C)080–20
CSPH*3012A**	0.99	1.03	58MV(B,C)080–20
CSPH*3612A**	0.99	0.99	58MV(B,C)080–20
CAP**3621A**	0.99	1.03	58MV(B,C)100–20
CNPH*3017A**	0.99	1.04	58MV(B,C)100–20
CNPH*3617A**	0.99	1.04	58MV(B,C)100–20
CNPV*3621A**	0.99	1.04	58MV(B,C)100–20
CSPH*3012A**	0.99	1.04	58MV(B,C)100–20
CSPH*3612A**	0.99	1.02	58MV(B,C)100–20
CNPH*3017A**	0.99	1.02	58MV(B,C)120–20
CNPH*3617A**	0.99	1.02	58MV(B,C)120–20
CSPH*3012A**	0.99	1.02	58MV(B,C)120–20
CSPH*3612A**	0.99	0.99	58MV(B,C)120–20
CNPH*3017A**	0.99	1.04	58MVB040–14
CNPH*3617A**	0.99	1.04	58MVB040–14
CSPH*3012A**	0.99	1.04	58MVB040–14
CSPH*3612A**	1.00	1.01	58MVB040–14
CAP**3017A**	1.00	1.04	58PH*070–16
CAP**3617A**	1.00	1.03	58PH*070–16
CNPH*3017A**	1.00	1.04	58PH*070–16
CNPH*3617A**	1.00	1.04	58PH*070–16
CNPV*3017A**	1.00	1.04	58PH*070–16
CNPV*3117A**	1.01	1.01	58PH*070–16
CNPV*3617A**	1.00	1.04	58PH*070–16
CNPV*3717A**	1.01	0.98	58PH*070–16
CSPH*3012A**	1.00	1.04	58PH*070–16
CSPH*3612A**	1.01	1.01	58PH*070–16
CAP**3621A**	1.00	1.01	58PH*090–16
CNPH*3017A**	1.00	1.03	58PH*090–16
CNPH*3617A**	1.00	1.03	58PH*090–16
CNPV*3621A**	1.00	1.03	58PH*090–16
CSPH*3012A**	0.99	1.03	58PH*090–16
CSPH*3612A**	1.01	1.00	58PH*090–16

See note on pg. 50

HEAT PUMP HEATING PERFORMANCE

INDOOR AIR		OUTDOOR COIL ENTERING AIR TEMPERATURES °F (°C)																							
		−3 (−19.4)			7 (−13.9)			17 (−8.3)			27 (−2.8)			37 (2.8)			47 (8.3)			57 (13.9)			67 (19.4)		
EDB °F (°C)	CFM	Capacity MBtuh		Total Sys. KW†	Capacity MBtuh		Total Sys. KW†	Capacity MBtuh		Total Sys. KW†	Capacity MBtuh		Total Sys. KW†	Capacity MBtuh		Total Sys. KW†	Capacity MBtuh		Total Sys. KW†	Capacity MBtuh		Total Sys. KW†	Capacity MBtuh		Total Sys. KW†
		Total	Integ*		Total	Integ*		Total	Integ*		Total	Integ*		Total	Integ*		Total	Integ*		Total	Integ*		Total	Integ*	
25HCC536A30 Outdoor Section With FX4DNF037 Indoor Section																									
65 (18.3)	1050	11.44	10.52	1.97	15.33	14.09	2.06	19.61	17.88	2.15	24.41	21.68	2.26	29.99	27.29	2.39	35.11	35.11	2.52	40.74	40.74	2.65	46.35	46.35	2.78
	1200	11.66	10.73	1.98	15.60	14.34	2.06	19.93	18.17	2.15	24.85	22.07	2.24	30.35	27.62	2.36	35.57	35.57	2.47	41.14	41.14	2.57	46.50	46.50	2.69
	1350	11.86	10.91	2.00	15.83	14.55	2.07	20.21	18.42	2.15	25.78	22.90	2.25	30.66	27.90	2.34	35.94	35.94	2.44	41.32	41.32	2.53	46.51	46.51	2.63
70 (21.1)	1050	10.73	9.87	2.07	14.64	13.45	2.16	18.94	17.26	2.25	23.71	21.05	2.36	29.52	26.86	2.51	34.56	34.56	2.63	40.20	40.20	2.78	45.76	45.76	2.91
	1200	10.95	10.08	2.08	14.91	13.70	2.16	19.26	17.56	2.25	24.10	21.41	2.35	29.87	27.19	2.47	35.00	35.00	2.59	40.60	40.60	2.70	45.95	45.95	2.82
	1350	11.15	10.26	2.09	15.15	13.92	2.17	19.53	17.81	2.25	24.44	21.70	2.34	30.17	27.46	2.45	35.37	35.37	2.56	40.83	40.83	2.65	46.01	46.01	2.76
75 (23.9)	1050	9.98	9.19	2.17	13.92	12.79	2.26	18.23	16.62	2.36	22.97	20.40	2.47	28.97	26.36	2.63	34.00	34.00	2.76	39.58	39.58	2.92	45.14	45.14	3.04
	1200	10.20	9.38	2.18	14.18	13.03	2.26	18.55	16.92	2.35	23.37	20.76	2.45	29.35	26.71	2.59	34.43	34.43	2.71	40.10	40.10	2.84	45.39	45.39	2.95
	1350	10.39	9.55	2.19	14.41	13.25	2.27	18.82	17.16	2.35	23.70	21.05	2.45	29.66	26.99	2.57	34.80	34.80	2.68	40.32	40.32	2.78	45.49	45.49	2.89

HEATING INDOOR MODEL	CAPACITY	POWER	FURNACE MODEL
*FX4DN(B,F)037	1.00	1.00	
FB4CNF036	0.99	1.06	
FB4CNF042	1.00	1.01	
FE4AN(B,F)003	0.97	1.02	
FE4AN(B,F)005	0.98	0.97	
FE4ANB006	0.98	0.94	
FE4ANF002	0.98	1.04	
FF1ENP036	1.01	1.11	
FF1ENP037	1.01	1.09	
FV4BN(B,F)003	0.97	1.02	
FV4BN(B,F)005	0.98	0.97	
FV4BNB006	0.98	0.94	
FV4BNF002	0.98	1.04	
FV4CN(B,F)003	0.97	1.02	
FV4CN(B,F)005	0.98	0.97	
FV4CNB006	0.98	0.94	
FV4CNF002	0.98	1.04	
FX4CN(B,F)036	0.99	1.04	
FX4CN(B,F)042	1.01	1.03	
FX4DN(B,F)043	0.97	0.97	
FY4ANF036	1.01	1.11	
FY4ANF042	1.02	1.09	
FY5BNF036	1.00	1.06	
FY5BNF042	1.01	1.04	
CAP**3614A**	1.00	1.10	
CAP**3617A**	1.01	1.10	
CAP**3619A**	1.01	1.10	
CAP**3621A**	1.01	1.10	
CAP**4221A**	1.01	1.09	
CAP**4224A**	1.01	1.09	
CNPF*3618A**	1.01	1.10	
CNPH*3617A**	1.01	1.10	
CNPH*4221A**	1.01	1.08	
CNPV*3617A**	1.01	1.10	
CNPV*3621A**	1.01	1.10	
CNPV*3717A**	1.02	1.05	
CNPV*4217A**	1.02	1.07	
CNPV*4221A**	1.01	1.08	
CNPV*4324A**	1.02	1.05	
CSPH*3612A**	1.01	1.06	
CSPH*4212A**	1.01	1.05	
CAP**3614A**	0.98	1.06	58CV(A,X)070−12
CNPH*3617A**	0.98	1.06	58CV(A,X)070−12
CNPH*4221A**	0.98	1.05	58CV(A,X)070−12

HEATING INDOOR MODEL	CAPACITY	POWER	FURNACE MODEL
CSPH*3612A**	0.98	1.03	58CV(A,X)070−12
CSPH*4212A**	0.99	1.02	58CV(A,X)070−12
CAP**3617A**	0.97	1.04	58CV(A,X)090−16
CNPH*3617A**	0.97	1.05	58CV(A,X)090−16
CNPH*4221A**	0.98	1.03	58CV(A,X)090−16
CNPV*3617A**	0.97	1.05	58CV(A,X)090−16
CNPV*3717A**	0.99	0.99	58CV(A,X)090−16
CNPV*4217A**	0.98	1.02	58CV(A,X)090−16
CSPH*3612A**	0.98	1.02	58CV(A,X)090−16
CSPH*4212A**	0.98	1.01	58CV(A,X)090−16
CAP**3621A**	0.97	1.03	58CV(A,X)110−20
CAP**4221A**	0.98	1.03	58CV(A,X)110−20
CNPH*3617A**	0.97	1.04	58CV(A,X)110−20
CNPH*4221A**	0.98	1.03	58CV(A,X)110−20
CNPV*3621A**	0.97	1.04	58CV(A,X)110−20
CNPV*4221A**	0.98	1.03	58CV(A,X)110−20
CSPH*3612A**	0.98	1.01	58CV(A,X)110−20
CSPH*4212A**	0.98	1.00	58CV(A,X)110−20
CAP**4224A**	0.97	1.02	58CV(A,X)135−22
CNPH*3617A**	0.97	1.04	58CV(A,X)135−22
CNPH*4221A**	0.97	1.02	58CV(A,X)135−22
CNPV*4324A**	0.98	0.97	58CV(A,X)135−22
CSPH*3612A**	0.98	1.01	58CV(A,X)135−22
CSPH*4212A**	0.98	1.00	58CV(A,X)135−22
CAP**4224A**	0.97	1.01	58CV(A,X)155−22
CNPH*3617A**	0.97	1.04	58CV(A,X)155−22
CNPH*4221A**	0.97	1.01	58CV(A,X)155−22
CNPV*4324A**	0.98	0.97	58CV(A,X)155−22
CSPH*3612A**	0.98	1.00	58CV(A,X)155−22
CSPH*4212A**	0.98	0.99	58CV(A,X)155−22
CAP**3619A**	0.99	1.10	58HDV040−−12
CNPH*3617A**	0.99	1.10	58HDV040−−12
CNPH*4221A**	0.99	1.08	58HDV040−−12
CNPH*4321A**	1.01	1.04	58HDV040−−12
CSPH*3612A**	0.99	1.06	58HDV040−−12
CSPH*4212A**	0.99	1.05	58HDV040−−12
CAP**3619A**	0.99	1.07	58HDV060−−12
CNPH*3617A**	0.99	1.08	58HDV060−−12
CNPH*4221A**	0.99	1.06	58HDV060−−12
CNPH*4321A**	1.01	1.01	58HDV060−−12
CSPH*3612A**	0.99	1.03	58HDV060−−12
CSPH*4212A**	0.99	1.02	58HDV060−−12
CNPH*3617A**	0.99	1.05	58HDV080−−20
CNPH*4221A**	0.99	1.03	58HDV080−−20

HEATING INDOOR MODEL	CAPACITY	POWER	FURNACE MODEL
CNPH*4321A**	1.01	0.98	58HDV080−−20
CSPH*3612A**	0.99	1.01	58HDV080−−20
CSPH*4212A**	0.99	0.99	58HDV080−−20
CAP**4224A**	0.99	1.02	58HDV100−−20
CNPH*3617A**	0.98	1.05	58HDV100−−20
CNPH*4221A**	0.99	1.03	58HDV100−−20
CNPH*4321A**	1.00	0.98	58HDV100−−20
CNPV*4324A**	1.01	0.98	58HDV100−−20
CSPH*3612A**	0.98	1.00	58HDV100−−20
CSPH*4212A**	0.99	0.99	58HDV100−−20
CAP**3617A**	0.98	1.04	58ME(B,C)060−12
CNPH*3617A**	0.98	1.04	58ME(B,C)060−12
CNPH*4221A**	0.98	1.02	58ME(B,C)060−12
CNPV*3617A**	0.98	1.04	58ME(B,C)060−12
CNPV*3717A**	1.00	0.99	58ME(B,C)060−12
CNPV*4217A**	0.99	1.01	58ME(B,C)060−12
CSPH*3612A**	0.99	1.01	58ME(B,C)060−12
CSPH*4212A**	0.99	1.00	58ME(B,C)060−12
CAP**3617A**	0.98	1.04	58ME(B,C)080−12
CNPH*3617A**	0.98	1.05	58ME(B,C)080−12
CNPH*4221A**	0.98	1.03	58ME(B,C)080−12
CNPV*3617A**	0.98	1.05	58ME(B,C)080−12
CNPV*3717A**	0.99	0.99	58ME(B,C)080−12
CNPV*4217A**	0.99	1.02	58ME(B,C)080−12
CSPH*3612A**	0.99	1.01	58ME(B,C)080−12
CSPH*4212A**	0.99	1.00	58ME(B,C)080−12
CAP**3617A**	0.98	1.04	58ME(B,C)080−16
CNPH*3617A**	0.98	1.04	58ME(B,C)080−16
CNPH*4221A**	0.98	1.02	58ME(B,C)080−16
CNPV*3617A**	0.98	1.04	58ME(B,C)080−16
CNPV*3717A**	1.00	0.99	58ME(B,C)080−16
CNPV*4217A**	0.99	1.01	58ME(B,C)080−16
CSPH*3612A**	0.99	1.01	58ME(B,C)080−16
CSPH*4212A**	0.99	1.00	58ME(B,C)080−16
CAP**3621A**	0.97	1.02	58ME(B,C)100−20
CAP**4221A**	0.98	1.01	58ME(B,C)100−20
CNPH*3617A**	0.97	1.04	58ME(B,C)100−20
CNPH*4221A**	0.98	1.02	58ME(B,C)100−20
CNPV*3621A**	0.97	1.04	58ME(B,C)100−20
CNPV*4221A**	0.98	1.02	58ME(B,C)100−20
CSPH*3612A**	0.98	1.01	58ME(B,C)100−20
CSPH*4212A**	0.98	0.99	58ME(B,C)100−20
CAP**3617A**	0.98	1.03	58MEB040−12
CNPH*3617A**	0.98	1.04	58MEB040−12

HEAT PUMP HEATING PERFORMANCE

25HCC536A30 Outdoor Section With FX4DNF037 Indoor Section

HEATING INDOOR MODEL	CAPACITY	POWER	FURNACE MODEL
CNPH*4221A**	0.98	1.02	58MEB040–12
CNPV*3617A**	0.98	1.04	58MEB040–12
CNPV*3717A**	0.99	0.98	58MEB040–12
CNPV*4217A**	0.99	1.01	58MEB040–12
CSPH*3612A**	0.99	1.01	58MEB040–12
CSPH*4212A**	0.99	1.00	58MEB040–12
CAP**3617A**	0.98	1.04	58MV(B,C)060–14
CNPH*3617A**	0.98	1.05	58MV(B,C)060–14
CNPH*4221A**	0.98	1.03	58MV(B,C)060–14
CNPV*3617A**	0.98	1.05	58MV(B,C)060–14
CNPV*3717A**	0.99	0.99	58MV(B,C)060–14
CNPV*4217A**	0.99	1.02	58MV(B,C)060–14
CSPH*3612A**	0.99	1.02	58MV(B,C)060–14
CSPH*4212A**	0.99	1.00	58MV(B,C)060–14
CAP**3621A**	0.98	1.05	58MV(B,C)080–14
CAP**4221A**	0.98	1.04	58MV(B,C)080–14
CNPH*3617A**	0.98	1.06	58MV(B,C)080–14
CNPH*4221A**	0.98	1.04	58MV(B,C)080–14
CNPV*3621A**	0.98	1.06	58MV(B,C)080–14
CNPV*4221A**	0.98	1.04	58MV(B,C)080–14
CNPV*4324A**	0.99	1.00	58MV(B,C)080–14
CNPV*4821A**	0.99	1.02	58MV(B,C)080–14
CNPV*6024A**	0.99	1.00	58MV(B,C)080–14
CSPH*3612A**	0.99	1.03	58MV(B,C)080–14
CSPH*4212A**	0.99	1.02	58MV(B,C)080–14
CAP**3621A**	0.97	1.04	58MV(B,C)080–20
CAP**4221A**	0.98	1.04	58MV(B,C)080–20
CNPH*3617A**	0.97	1.05	58MV(B,C)080–20
CNPH*4221A**	0.98	1.04	58MV(B,C)080–20
CNPV*3621A**	0.97	1.05	58MV(B,C)080–20
CNPV*4221A**	0.98	1.04	58MV(B,C)080–20
CNPV*4324A**	0.99	0.99	58MV(B,C)080–20
CSPH*3612A**	0.98	1.02	58MV(B,C)080–20
CSPH*4212A**	0.99	1.02	58MV(B,C)080–20
CAP**3621A**	0.98	1.04	58MV(B,C)100–20
CAP**4221A**	0.98	1.03	58MV(B,C)100–20
CNPH*3617A**	0.98	1.05	58MV(B,C)100–20
CNPH*4221A**	0.98	1.03	58MV(B,C)100–20
CNPV*3621A**	0.98	1.05	58MV(B,C)100–20
CNPV*4221A**	0.98	1.03	58MV(B,C)100–20
CSPH*3612A**	0.99	1.02	58MV(B,C)100–20
CSPH*4212A**	0.99	1.01	58MV(B,C)100–20
CAP**4224A**	0.97	1.02	58MV(B,C)120–20
CNPH*3617A**	0.97	1.05	58MV(B,C)120–20
CNPH*4221A**	0.97	1.02	58MV(B,C)120–20
CNPV*4324A**	0.99	0.98	58MV(B,C)120–20
CSPH*3612A**	0.98	1.02	58MV(B,C)120–20
CSPH*4212A**	0.98	1.00	58MV(B,C)120–20
CAP**4224A**	0.98	1.04	58MVB040–14
CNPH*3617A**	0.98	1.07	58MVB040–14
CNPH*4221A**	0.98	1.05	58MVB040–14
CNPV*4324A**	0.99	1.00	58MVB040–14
CSPH*3612A**	0.99	1.04	58MVB040–14
CSPH*4212A**	0.99	1.03	58MVB040–14
CAP**3614A**	0.99	1.09	58PH*045–08
CNPH*3617A**	0.99	1.09	58PH*045–08
CNPH*4221A**	0.99	1.07	58PH*045–08
CSPH*3612A**	1.00	1.06	58PH*045–08
CSPH*4212A**	1.01	1.05	58PH*045–08

HEATING INDOOR MODEL	CAPACITY	POWER	FURNACE MODEL
CAP**3617A**	0.98	1.06	58PH*070–16
CNPH*3617A**	0.98	1.07	58PH*070–16
CNPH*4221A**	0.99	1.05	58PH*070–16
CNPV*3617A**	0.98	1.07	58PH*070–16
CNPV*3717A**	1.00	1.01	58PH*070–16
CNPV*4217A**	0.99	1.04	58PH*070–16
CSPH*3612A**	0.99	1.04	58PH*070–16
CSPH*4212A**	0.99	1.03	58PH*070–16
CAP**3621A**	0.98	1.02	58PH*090–16
CAP**4221A**	0.98	1.01	58PH*090–16
CNPH*3617A**	0.98	1.04	58PH*090–16
CNPH*4221A**	0.98	1.02	58PH*090–16
CNPV*3621A**	0.98	1.04	58PH*090–16
CNPV*4221A**	0.98	1.02	58PH*090–16
CSPH*3612A**	0.99	1.01	58PH*090–16
CSPH*4212A**	0.99	0.99	58PH*090–16
CAP**3621A**	0.98	1.02	58PH*110–20
CAP**4221A**	0.98	1.01	58PH*110–20
CNPH*3617A**	0.98	1.03	58PH*110–20
CNPH*4221A**	0.98	1.01	58PH*110–20
CNPV*3621A**	0.98	1.03	58PH*110–20
CNPV*4221A**	0.98	1.01	58PH*110–20
CSPH*3612A**	0.99	1.00	58PH*110–20
CSPH*4212A**	0.99	0.98	58PH*110–20

See note on pg. 50

HEAT PUMP HEATING PERFORMANCE

INDOOR AIR		OUTDOOR COIL ENTERING AIR TEMPERATURES °F (°C)																							
		−3 (−19.4)			7 (−13.9)			17 (−8.3)			27 (−2.8)			37 (2.8)			47 (8.3)			57 (13.9)			67 (19.4)		
EDB °F (°C)	CFM	Capacity MBtuh		Total Sys. KW†	Capacity MBtuh		Total Sys. KW†	Capacity MBtuh		Total Sys. KW†	Capacity MBtuh		Total Sys. KW†	Capacity MBtuh		Total Sys. KW†	Capacity MBtuh		Total Sys. KW†	Capacity MBtuh		Total Sys. KW†	Capacity MBtuh		Total Sys. KW†
		Total	Integ*		Total	Integ*		Total	Integ*		Total	Integ*		Total	Integ*		Total	Integ*		Total	Integ*		Total	Integ*	
25HCC542A30 Outdoor Section With FX4DNF043 Indoor Section																									
65 (18.3)	1225	15.59	14.35	2.29	20.20	18.56	2.45	25.92	23.63	2.65	30.84	27.39	2.83	36.17	32.92	3.00	42.10	42.10	3.16	48.79	48.79	3.32	56.67	56.67	3.45
	1400	15.85	14.58	2.30	20.53	18.87	2.46	26.26	23.95	2.65	31.19	27.70	2.82	36.63	33.33	2.97	42.66	42.66	3.12	49.49	49.49	3.26	57.34	57.34	3.36
	1575	16.10	14.81	2.31	20.82	19.13	2.47	26.55	24.21	2.66	31.50	27.98	2.82	37.01	33.68	2.96	43.12	43.12	3.10	50.13	50.13	3.21	57.72	57.72	3.30
70 (21.1)	1225	14.91	13.71	2.42	19.56	17.97	2.58	24.56	22.39	2.75	30.36	26.97	2.95	35.61	32.40	3.12	41.46	41.46	3.29	48.00	48.00	3.46	55.78	55.78	3.61
	1400	15.19	13.98	2.43	19.88	18.27	2.58	24.93	22.73	2.74	30.71	27.27	2.94	36.05	32.81	3.09	42.00	42.00	3.25	48.69	48.69	3.40	56.54	56.54	3.51
	1575	15.44	14.20	2.45	20.17	18.54	2.59	25.36	23.13	2.75	31.04	27.56	2.93	36.43	33.15	3.08	42.45	42.45	3.22	49.27	49.27	3.37	56.99	56.99	3.45
75 (23.9)	1225	14.21	13.08	2.57	18.88	17.35	2.71	23.85	21.74	2.87	29.87	26.53	3.08	35.07	31.91	3.25	40.82	40.82	3.43	47.26	47.26	3.61	54.86	54.86	3.79
	1400	14.48	13.32	2.58	19.21	17.65	2.71	24.24	22.10	2.87	30.24	26.86	3.06	35.49	32.30	3.22	41.35	41.35	3.38	47.91	47.91	3.55	55.73	55.73	3.68
	1575	14.73	13.55	2.59	19.49	17.91	2.72	24.58	22.41	2.87	30.53	27.11	3.06	35.86	32.63	3.21	41.79	41.79	3.36	48.46	48.46	3.51	56.22	56.22	3.62

HEATING INDOOR MODEL	CAPACITY	POWER	FURNACE MODEL
*FX4DN(B,F)043	1.00	1.00	
FB4CNF042	1.01	1.02	
FB4CNF048	1.01	1.01	
FE4AN(B,F)003	1.00	1.03	
FE4AN(B,F)005	1.01	0.99	
FE4ANB006	1.01	0.96	
FV4BN(B,F)003	1.00	1.03	
FV4BN(B,F)005	1.01	0.99	
FV4BNB006	1.01	0.96	
FV4CN(B,F)003	1.00	1.03	
FV4CN(B,F)005	1.01	0.99	
FV4CNB006	1.01	0.96	
FX4CN(B,F)042	1.01	1.02	
FX4CN(B,F)048	1.01	0.99	
FX4DN(B,F)049	1.01	0.98	
FY4ANF042	1.01	1.06	
FY4ANF048	1.01	1.04	
FY5BNF042	1.01	1.03	
FY5BNF048	1.01	1.01	
CAP**4221A**	1.01	1.07	
CAP**4224A**	1.01	1.07	
CAP**4817A**	1.01	1.02	
CAP**4821A**	1.01	1.03	
CAP**4823A**	1.01	1.03	
CAP**4824A**	1.01	1.03	
CNPF*4818A**	1.01	1.05	
CNPH*4221A**	1.01	1.06	
CNPH*4821A**	1.01	1.03	
CNPV*4217A**	1.01	1.05	
CNPV*4221A**	1.01	1.06	
CNPV*4324A**	1.01	1.01	
CNPV*4821A**	1.01	1.03	
CNPV*4824A**	1.01	1.03	
CSPH*4212A**	1.01	1.03	
CSPH*4812A**	1.01	1.02	
CNPH*4221A**	1.01	1.07	58CV(A,X)070−12
CNPH*4821A**	1.01	1.04	58CV(A,X)070−12
CSPH*4212A**	1.01	1.04	58CV(A,X)070−12
CSPH*4812A**	1.01	1.03	58CV(A,X)070−12
CAP**4817A**	1.01	1.01	58CV(A,X)090−16
CNPH*4221A**	1.01	1.06	58CV(A,X)090−16
CNPH*4821A**	1.01	1.02	58CV(A,X)090−16
CNPV*4217A**	1.01	1.04	58CV(A,X)090−16
CSPH*4212A**	1.01	1.02	58CV(A,X)090−16

HEATING INDOOR MODEL	CAPACITY	POWER	FURNACE MODEL
CSPH*4812A**	1.01	1.01	58CV(A,X)090−16
CAP**4221A**	1.01	1.05	58CV(A,X)110−20
CAP**4821A**	1.01	1.02	58CV(A,X)110−20
CNPH*4221A**	1.01	1.05	58CV(A,X)110−20
CNPH*4821A**	1.01	1.02	58CV(A,X)110−20
CNPV*4221A**	1.01	1.05	58CV(A,X)110−20
CNPV*4324A**	1.01	0.99	58CV(A,X)110−20
CNPV*4821A**	1.01	1.02	58CV(A,X)110−20
CSPH*4212A**	1.01	1.02	58CV(A,X)110−20
CSPH*4812A**	1.01	1.01	58CV(A,X)110−20
CAP**4224A**	1.00	1.03	58CV(A,X)135−22
CAP**4824A**	1.01	1.01	58CV(A,X)135−22
CNPH*4221A**	1.01	1.05	58CV(A,X)135−22
CNPH*4821A**	1.01	1.01	58CV(A,X)135−22
CNPV*4324A**	1.01	0.98	58CV(A,X)135−22
CNPV*4824A**	1.01	1.01	58CV(A,X)135−22
CSPH*4212A**	1.01	1.01	58CV(A,X)135−22
CSPH*4812A**	1.01	1.00	58CV(A,X)135−22
CAP**4224A**	1.00	1.03	58CV(A,X)155−22
CAP**4824A**	1.01	1.01	58CV(A,X)155−22
CNPH*4221A**	1.00	1.03	58CV(A,X)155−22
CNPH*4821A**	1.01	1.01	58CV(A,X)155−22
CNPV*4324A**	1.01	0.98	58CV(A,X)155−22
CNPV*4824A**	1.01	1.01	58CV(A,X)155−22
CSPH*4212A**	1.00	1.00	58CV(A,X)155−22
CSPH*4812A**	1.01	1.00	58CV(A,X)155−22
CAP**4823A**	1.01	1.01	58HDV080−−20
CNPH*4221A**	1.01	1.05	58HDV080−−20
CNPH*4321A**	1.01	0.98	58HDV080−−20
CNPH*4821A**	1.01	1.01	58HDV080−−20
CSPH*4212A**	1.01	1.01	58HDV080−−20
CSPH*4812A**	1.01	1.00	58HDV080−−20
CAP**4224A**	1.01	1.04	58HDV100−−20
CNPH*4221A**	1.01	1.05	58HDV100−−20
CNPH*4321A**	1.01	0.99	58HDV100−−20
CNPH*4821A**	1.01	1.01	58HDV100−−20
CNPV*4324A**	1.01	0.98	58HDV100−−20
CNPV*4824A**	1.01	1.01	58HDV100−−20
CSPH*4212A**	1.01	1.02	58HDV100−−20
CSPH*4812A**	1.01	1.01	58HDV100−−20
CAP**4817A**	1.01	1.01	58ME(B,C)060−12
CNPH*4221A**	1.01	1.05	58ME(B,C)060−12
CNPH*4821A**	1.01	1.01	58ME(B,C)060−12
CNPV*4217A**	1.01	1.04	58ME(B,C)060−12

HEATING INDOOR MODEL	CAPACITY	POWER	FURNACE MODEL
CSPH*4212A**	1.01	1.01	58ME(B,C)060−12
CSPH*4812A**	1.01	1.01	58ME(B,C)060−12
CAP**4817A**	1.01	1.00	58ME(B,C)080−12
CNPH*4221A**	1.01	1.05	58ME(B,C)080−12
CNPH*4821A**	1.01	1.01	58ME(B,C)080−12
CNPV*4217A**	1.01	1.03	58ME(B,C)080−12
CSPH*4212A**	1.01	1.01	58ME(B,C)080−12
CSPH*4812A**	1.01	1.00	58ME(B,C)080−12
CAP**4817A**	1.01	1.01	58ME(B,C)080−16
CNPH*4221A**	1.01	1.06	58ME(B,C)080−16
CNPH*4821A**	1.01	1.02	58ME(B,C)080−16
CNPV*4217A**	1.01	1.04	58ME(B,C)080−16
CSPH*4212A**	1.01	1.02	58ME(B,C)080−16
CSPH*4812A**	1.01	1.01	58ME(B,C)080−16
CAP**4221A**	1.01	1.04	58ME(B,C)100−20
CAP**4821A**	1.01	1.01	58ME(B,C)100−20
CNPH*4221A**	1.01	1.04	58ME(B,C)100−20
CNPH*4821A**	1.01	1.00	58ME(B,C)100−20
CNPV*4221A**	1.01	1.04	58ME(B,C)100−20
CNPV*4324A**	1.01	0.97	58ME(B,C)100−20
CNPV*4821A**	1.01	1.00	58ME(B,C)100−20
CSPH*4212A**	1.01	1.01	58ME(B,C)100−20
CSPH*4812A**	1.01	1.00	58ME(B,C)100−20
CAP**4224A**	1.01	1.03	58ME(B,C)120−20
CAP**4824A**	1.01	1.00	58ME(B,C)120−20
CNPH*4221A**	1.01	1.04	58ME(B,C)120−20
CNPH*4821A**	1.01	0.99	58ME(B,C)120−20
CNPV*4324A**	1.01	0.97	58ME(B,C)120−20
CNPV*4824A**	1.01	0.99	58ME(B,C)120−20
CSPH*4212A**	1.01	1.00	58ME(B,C)120−20
CSPH*4812A**	1.01	0.99	58ME(B,C)120−20
CAP**4817A**	1.01	1.00	58MEB040−12
CNPH*4221A**	1.01	1.05	58MEB040−12
CNPH*4821A**	1.01	1.01	58MEB040−12
CNPV*4217A**	1.01	1.03	58MEB040−12
CSPH*4212A**	1.01	1.01	58MEB040−12
CSPH*4812A**	1.01	1.00	58MEB040−12
CAP**4817A**	1.01	1.01	58MV(B,C)060−14
CNPH*4221A**	1.01	1.05	58MV(B,C)060−14
CNPH*4821A**	1.01	1.02	58MV(B,C)060−14
CNPV*4217A**	1.01	1.04	58MV(B,C)060−14
CSPH*4212A**	1.01	1.02	58MV(B,C)060−14
CSPH*4812A**	1.01	1.01	58MV(B,C)060−14
CAP**4221A**	1.01	1.07	58MV(B,C)080−14

HEAT PUMP HEATING PERFORMANCE

25HCC542A30 Outdoor Section With FX4DNF043 Indoor Section

HEATING INDOOR MODEL	CAPACITY	POWER	FURNACE MODEL
CAP**4821A**	1.01	1.04	58MV(B,C)080–14
CNPH*4221A**	1.01	1.07	58MV(B,C)080–14
CNPH*4821A**	1.01	1.03	58MV(B,C)080–14
CNPV*4221A**	1.01	1.07	58MV(B,C)080–14
CNPV*4821A**	1.01	1.03	58MV(B,C)080–14
CSPH*4212A**	1.01	1.04	58MV(B,C)080–14
CSPH*4812A**	1.01	1.03	58MV(B,C)080–14
CAP**4221A**	1.01	1.06	58MV(B,C)080–20
CAP**4821A**	1.01	1.03	58MV(B,C)080–20
CNPH*4221A**	1.01	1.06	58MV(B,C)080–20
CNPH*4821A**	1.01	1.03	58MV(B,C)080–20
CNPV*4221A**	1.01	1.06	58MV(B,C)080–20
CNPV*4324A**	1.01	1.00	58MV(B,C)080–20
CNPV*4821A**	1.01	1.03	58MV(B,C)080–20
CSPH*4212A**	1.01	1.03	58MV(B,C)080–20
CSPH*4812A**	1.01	1.02	58MV(B,C)080–20
CAP**4221A**	1.00	1.06	58MV(B,C)100–20
CAP**4821A**	1.01	1.04	58MV(B,C)100–20
CNPH*4221A**	1.00	1.06	58MV(B,C)100–20
CNPH*4821A**	1.01	1.03	58MV(B,C)100–20
CNPV*4221A**	1.00	1.06	58MV(B,C)100–20
CNPV*4324A**	1.01	1.01	58MV(B,C)100–20
CNPV*4821A**	1.01	1.03	58MV(B,C)100–20
CSPH*4212A**	1.00	1.02	58MV(B,C)100–20
CSPH*4812A**	1.01	1.03	58MV(B,C)100–20
CAP**4224A**	1.00	1.04	58MV(B,C)120–20
CAP**4824A**	1.01	1.02	58MV(B,C)120–20
CNPH*4221A**	1.00	1.04	58MV(B,C)120–20
CNPH*4821A**	1.01	1.02	58MV(B,C)120–20
CNPV*4324A**	1.01	0.99	58MV(B,C)120–20
CNPV*4824A**	1.01	1.02	58MV(B,C)120–20
CSPH*4212A**	1.00	1.01	58MV(B,C)120–20
CSPH*4812A**	1.01	1.01	58MV(B,C)120–20
CAP**4224A**	1.01	1.07	58MVB040–14
CAP**4824A**	1.01	1.04	58MVB040–14
CNPH*4221A**	1.01	1.07	58MVB040–14
CNPH*4821A**	1.01	1.04	58MVB040–14
CNPV*4324A**	1.01	1.01	58MVB040–14
CNPV*4824A**	1.01	1.04	58MVB040–14
CSPH*4212A**	1.01	1.04	58MVB040–14
CSPH*4812A**	1.01	1.03	58MVB040–14
CAP**4817A**	1.01	1.03	58PH*070–16
CNPH*4221A**	1.01	1.07	58PH*070–16
CNPH*4821A**	1.01	1.04	58PH*070–16
CNPV*4217A**	1.01	1.06	58PH*070–16
CSPH*4212A**	1.01	1.04	58PH*070–16
CSPH*4812A**	1.01	1.03	58PH*070–16
CAP**4221A**	1.01	1.05	58PH*090–16
CAP**4821A**	1.01	1.02	58PH*090–16
CNPH*4221A**	1.01	1.05	58PH*090–16
CNPH*4821A**	1.01	1.01	58PH*090–16
CNPV*4221A**	1.01	1.05	58PH*090–16
CNPV*4821A**	1.01	1.01	58PH*090–16
CSPH*4212A**	1.01	1.01	58PH*090–16
CSPH*4812A**	1.01	1.01	58PH*090–16
CAP**4221A**	1.01	1.04	58PH*110–20
CAP**4821A**	1.01	1.01	58PH*110–20
CNPH*4221A**	1.01	1.05	58PH*110–20
CNPH*4821A**	1.01	1.00	58PH*110–20

HEATING INDOOR MODEL	CAPACITY	POWER	FURNACE MODEL
CNPV*4221A**	1.01	1.05	58PH*110–20
CNPV*4324A**	1.01	0.97	58PH*110–20
CNPV*4821A**	1.01	1.00	58PH*110–20
CSPH*4212A**	1.01	1.01	58PH*110–20
CSPH*4812A**	1.01	1.00	58PH*110–20
CAP**4224A**	1.01	1.04	58PH*135–20
CAP**4824A**	1.01	1.01	58PH*135–20
CNPH*4221A**	1.01	1.05	58PH*135–20
CNPH*4821A**	1.01	1.01	58PH*135–20
CNPV*4324A**	1.01	0.98	58PH*135–20
CNPV*4824A**	1.01	1.01	58PH*135–20
CSPH*4212A**	1.01	1.01	58PH*135–20
CSPH*4812A**	1.01	1.01	58PH*135–20

See note on pg. 50

HEAT PUMP HEATING PERFORMANCE

INDOOR AIR		OUTDOOR COIL ENTERING AIR TEMPERATURES °F (°C)																							
		−3 (−19.4)			7 (−13.9)			17 (−8.3)			27 (−2.8)			37 (2.8)			47 (8.3)			57 (13.9)			67 (19.4)		
EDB °F (°C)	CFM	Capacity MBtuh		Total Sys. KW†	Capacity MBtuh		Total Sys. KW†	Capacity MBtuh		Total Sys. KW†	Capacity MBtuh		Total Sys. KW†	Capacity MBtuh		Total Sys. KW†	Capacity MBtuh		Total Sys. KW†	Capacity MBtuh		Total Sys. KW†	Capacity MBtuh		Total Sys. KW†
		Total	Integ*		Total	Integ*		Total	Integ*		Total	Integ*		Total	Integ*		Total	Integ*		Total	Integ*		Total	Integ*	
25HCC548A30 Outdoor Section With FX4DNF049 Indoor Section																									
65 (18.3)	1400	16.37	15.06	2.69	21.66	19.90	2.81	27.28	24.87	2.94	34.22	30.39	3.11	40.09	36.48	3.25	46.59	46.59	3.41	54.10	54.10	3.55	61.91	61.91	3.75
	1600	16.66	15.33	2.71	22.01	20.22	2.82	27.68	25.24	2.94	34.60	30.73	3.10	40.55	36.90	3.23	47.23	47.23	3.35	54.62	54.62	3.48	62.33	62.33	3.65
	1800	16.89	15.54	2.74	22.28	20.47	2.85	28.02	25.54	2.95	34.92	31.02	3.10	40.94	37.26	3.22	47.82	47.82	3.32	54.95	54.95	3.44	62.50	62.50	3.59
70 (21.1)	1400	15.67	14.42	2.80	20.94	19.24	2.92	26.53	24.19	3.05	33.62	29.86	3.24	39.50	35.94	3.40	45.90	45.90	3.57	53.35	53.35	3.71	61.09	61.09	3.92
	1600	15.92	14.64	2.82	21.26	19.54	2.93	26.91	24.54	3.06	34.06	30.25	3.23	39.96	36.36	3.37	46.50	46.50	3.52	53.89	53.89	3.64	61.56	61.56	3.83
	1800	16.18	14.89	2.85	21.57	19.82	2.96	27.28	24.87	3.07	34.42	30.57	3.23	40.35	36.72	3.36	47.13	47.13	3.48	54.27	54.27	3.60	61.81	61.81	3.77
75 (23.9)	1400	14.90	13.71	2.92	20.17	18.54	3.04	25.75	23.47	3.18	31.86	28.30	3.34	38.94	35.44	3.55	45.22	45.22	3.72	52.61	52.61	3.88	60.27	60.27	4.10
	1600	15.14	13.93	2.94	20.49	18.83	3.06	26.14	23.83	3.18	32.35	28.73	3.33	39.38	35.84	3.52	45.78	45.78	3.68	53.18	53.18	3.81	60.77	60.77	4.00
	1800	15.40	14.17	2.97	20.80	19.12	3.08	26.50	24.16	3.20	32.86	29.18	3.34	39.76	36.18	3.50	46.33	46.33	3.64	53.56	53.56	3.77	61.07	61.07	3.94

HEATING INDOOR MODEL	CAPACITY	POWER	FURNACE MODEL
*FX4DN(B,F)049	1.00	1.00	
FB4CNF048	0.99	1.03	
FB4CNF060	0.99	1.00	
FE4AN(B,F)005	0.97	0.99	
FE4ANB006	0.98	0.97	
FV4BN(B,F)005	0.97	0.99	
FV4BNB006	0.98	0.97	
FV4CN(B,F)005	0.97	0.99	
FV4CNB006	0.98	0.97	
FX4CN(B,F)048	0.99	1.00	
FX4CN(B,F)060	1.00	0.98	
FX4DN(B,F)061	0.99	0.96	
FY4ANB060	1.01	1.04	
FY4ANF048	1.00	1.06	
FY5BNB060	1.03	1.07	
FY5BNF048	0.99	1.01	
CAP**4817A**	0.99	1.04	
CAP**4821A**	1.00	1.05	
CAP**4823A**	1.00	1.05	
CAP**4824A**	1.00	1.05	
CAP**6021A**	1.00	1.03	
CAP**6024A**	1.00	1.03	
CAP**6025A**	1.00	1.03	
CNPF*4818A**	0.98	1.06	
CNPH*4821A**	1.00	1.05	
CNPH*6024A**	1.00	1.04	
CNPH*6124A**	1.01	1.03	
CNPV*4821A**	1.00	1.05	
CNPV*4824A**	1.00	1.05	
CNPV*6024A**	1.00	1.04	
CNPV*6124A**	1.01	1.02	
CSPH*4812A**	1.00	1.03	
CSPH*6012A**	1.00	1.02	
CAP**4817A**	0.98	1.02	58CV(A,X)090−16
CNPH*4821A**	0.97	1.02	58CV(A,X)090−16
CNPH*6024A**	0.97	1.00	58CV(A,X)090−16
CNPH*6124A**	0.98	1.01	58CV(A,X)090−16
CSPH*4812A**	0.98	1.02	58CV(A,X)090−16
CSPH*6012A**	0.98	1.01	58CV(A,X)090−16
CAP**4821A**	0.97	1.02	58CV(A,X)110−20
CAP**6021A**	0.98	1.01	58CV(A,X)110−20
CNPH*4821A**	0.97	1.01	58CV(A,X)110−20
CNPH*6024A**	0.97	1.00	58CV(A,X)110−20
CNPH*6124A**	0.98	1.00	58CV(A,X)110−20

HEATING INDOOR MODEL	CAPACITY	POWER	FURNACE MODEL
CNPV*4821A**	0.97	1.01	58CV(A,X)110−20
CNPV*6124A**	0.99	1.00	58CV(A,X)110−20
CSPH*4812A**	0.98	1.02	58CV(A,X)110−20
CSPH*6012A**	0.98	1.00	58CV(A,X)110−20
CAP**4824A**	0.97	1.00	58CV(A,X)135−22
CAP**6024A**	0.97	0.99	58CV(A,X)135−22
CNPH*4821A**	0.97	1.00	58CV(A,X)135−22
CNPH*6024A**	0.97	0.99	58CV(A,X)135−22
CNPH*6124A**	0.98	0.99	58CV(A,X)135−22
CNPV*4824A**	0.97	1.00	58CV(A,X)135−22
CNPV*6024A**	0.97	0.99	58CV(A,X)135−22
CNPV*6124A**	0.98	0.98	58CV(A,X)135−22
CSPH*4812A**	0.97	1.00	58CV(A,X)135−22
CSPH*6012A**	0.97	0.98	58CV(A,X)135−22
CAP**4824A**	0.97	1.00	58CV(A,X)155−22
CAP**6024A**	0.97	0.98	58CV(A,X)155−22
CNPH*4821A**	0.97	0.99	58CV(A,X)155−22
CNPH*6024A**	0.97	0.98	58CV(A,X)155−22
CNPH*6124A**	0.98	0.98	58CV(A,X)155−22
CNPV*4824A**	0.97	0.99	58CV(A,X)155−22
CNPV*6024A**	0.97	0.98	58CV(A,X)155−22
CNPV*6124A**	0.98	0.97	58CV(A,X)155−22
CSPH*4812A**	0.97	0.99	58CV(A,X)155−22
CSPH*6012A**	0.97	0.97	58CV(A,X)155−22
CAP**4823A**	0.99	1.04	58HDV080−−20
CNPH*4821A**	0.99	1.03	58HDV080−−20
CNPH*6024A**	1.00	1.03	58HDV080−−20
CNPH*6124A**	1.00	1.02	58HDV080−−20
CSPH*4812A**	0.99	1.03	58HDV080−−20
CSPH*6012A**	1.00	1.02	58HDV080−−20
CAP**6025A**	0.98	1.01	58HDV100−−20
CNPH*4821A**	0.99	1.03	58HDV100−−20
CNPH*6024A**	0.98	1.01	58HDV100−−20
CNPH*6124A**	1.00	1.02	58HDV100−−20
CNPV*4824A**	0.99	1.03	58HDV100−−20
CNPV*6024A**	0.98	1.01	58HDV100−−20
CNPV*6124A**	1.00	1.01	58HDV100−−20
CSPH*4812A**	0.99	1.03	58HDV100−−20
CSPH*6012A**	0.98	1.00	58HDV100−−20
CAP**4817A**	0.99	1.03	58ME(B,C)080−16
CNPH*4821A**	0.98	1.02	58ME(B,C)080−16
CNPH*6024A**	0.99	1.02	58ME(B,C)080−16
CNPH*6124A**	0.99	1.01	58ME(B,C)080−16
CSPH*4812A**	0.99	1.03	58ME(B,C)080−16

HEATING INDOOR MODEL	CAPACITY	POWER	FURNACE MODEL
CSPH*6012A**	0.99	1.01	58ME(B,C)080−16
CAP**4821A**	0.97	1.01	58ME(B,C)100−20
CAP**6021A**	0.98	1.00	58ME(B,C)100−20
CNPH*4821A**	0.97	1.00	58ME(B,C)100−20
CNPH*6024A**	0.98	0.99	58ME(B,C)100−20
CNPH*6124A**	0.98	0.99	58ME(B,C)100−20
CNPV*4821A**	0.97	1.00	58ME(B,C)100−20
CSPH*4812A**	0.98	1.00	58ME(B,C)100−20
CSPH*6012A**	0.98	0.98	58ME(B,C)100−20
CAP**4824A**	0.97	0.99	58ME(B,C)120−20
CAP**6024A**	0.98	0.99	58ME(B,C)120−20
CNPH*4821A**	0.97	0.99	58ME(B,C)120−20
CNPH*6024A**	0.98	0.99	58ME(B,C)120−20
CNPH*6124A**	0.98	0.98	58ME(B,C)120−20
CNPV*4824A**	0.97	0.99	58ME(B,C)120−20
CNPV*6024A**	0.98	0.99	58ME(B,C)120−20
CNPV*6124A**	0.98	0.96	58ME(B,C)120−20
CNPV*6124A**	1.00	0.99	58ME(B,C)120−20
CSPH*4812A**	0.98	1.00	58ME(B,C)120−20
CSPH*6012A**	0.98	0.98	58ME(B,C)120−20
CAP**4821A**	0.97	1.03	58MV(B,C)080−20
CAP**6021A**	0.98	1.03	58MV(B,C)080−20
CNPH*4821A**	0.97	1.03	58MV(B,C)080−20
CNPH*6024A**	0.97	1.01	58MV(B,C)080−20
CNPH*6124A**	0.98	1.02	58MV(B,C)080−20
CNPV*4821A**	0.97	1.03	58MV(B,C)080−20
CSPH*4812A**	0.98	1.03	58MV(B,C)080−20
CSPH*6012A**	0.98	1.02	58MV(B,C)080−20
CAP**4821A**	0.98	1.04	58MV(B,C)100−20
CAP**6021A**	0.98	1.02	58MV(B,C)100−20
CNPH*4821A**	0.98	1.03	58MV(B,C)100−20
CNPH*6024A**	0.98	1.02	58MV(B,C)100−20
CNPH*6124A**	0.99	1.02	58MV(B,C)100−20
CNPV*4821A**	0.98	1.03	58MV(B,C)100−20
CNPV*6124A**	0.99	1.00	58MV(B,C)100−20
CNPV*6124A**	1.01	1.03	58MV(B,C)100−20
CSPH*4812A**	0.98	1.02	58MV(B,C)100−20
CSPH*6012A**	0.98	1.01	58MV(B,C)100−20
CAP**4824A**	0.97	1.01	58MV(B,C)120−20
CAP**6024A**	0.98	1.01	58MV(B,C)120−20
CNPH*4821A**	0.97	1.01	58MV(B,C)120−20
CNPH*6024A**	0.98	1.01	58MV(B,C)120−20
CNPH*6124A**	0.98	1.00	58MV(B,C)120−20
CNPV*4824A**	0.97	1.01	58MV(B,C)120−20

HEAT PUMP HEATING PERFORMANCE

25HCC548A30 Outdoor Section With FX4DNF049 Indoor Section

HEATING INDOOR MODEL	CAPACITY	POWER	FURNACE MODEL
CNPV*6024A**	0.98	1.01	58MV(B,C)120–20
CNPV*6124A**	0.98	0.99	58MV(B,C)120–20
CNPV*6124A**	1.00	1.01	58MV(B,C)120–20
CSPH*4812A**	0.98	1.02	58MV(B,C)120–20
CSPH*6012A**	0.98	1.00	58MV(B,C)120–20
CAP**4821A**	0.98	1.02	58PH*090–16
CAP**6021A**	0.98	1.00	58PH*090–16
CNPH*4821A**	0.98	1.01	58PH*090–16
CNPH*6024A**	0.98	1.00	58PH*090–16
CNPH*6124A**	0.99	1.00	58PH*090–16
CNPV*4821A**	0.98	1.01	58PH*090–16
CSPH*4812A**	0.98	1.01	58PH*090–16
CSPH*6012A**	0.98	0.99	58PH*090–16
CAP**4821A**	0.97	1.01	58PH*110–20
CAP**6021A**	0.97	0.99	58PH*110–20
CNPH*4821A**	0.97	1.00	58PH*110–20
CNPH*6024A**	0.97	0.98	58PH*110–20
CNPH*6124A**	0.98	0.99	58PH*110–20
CNPV*4821A**	0.97	1.00	58PH*110–20
CSPH*4812A**	0.97	1.00	58PH*110–20
CSPH*6012A**	0.98	0.98	58PH*110–20
CAP**4824A**	0.98	1.01	58PH*135–20
CAP**6024A**	0.98	1.00	58PH*135–20
CNPH*4821A**	0.97	1.00	58PH*135–20
CNPH*6024A**	0.98	1.00	58PH*135–20
CNPH*6124A**	0.98	0.99	58PH*135–20
CNPV*4824A**	0.97	1.00	58PH*135–20
CNPV*6024A**	0.98	1.00	58PH*135–20
CNPV*6124A**	0.98	0.97	58PH*135–20
CSPH*4812A**	0.98	1.01	58PH*135–20
CSPH*6012A**	0.98	0.99	58PH*135–20

See note on pg. 50

HEAT PUMP HEATING PERFORMANCE CONTINUED

INDOOR AIR		OUTDOOR COIL ENTERING AIR TEMPERATURES °F (°C)																							
		−3 (−19.4)			7 (−13.9)			17 (−8.3)			27 (−2.8)			37 (2.8)			47 (8.3)			57 (13.9)			67 (19.4)		
EDB °F (°C)	CFM	Capacity MBtuh		Total Sys. KW†	Capacity MBtuh		Total Sys. KW†	Capacity MBtuh		Total Sys. KW†	Capacity MBtuh		Total Sys. KW†	Capacity MBtuh		Total Sys. KW†	Capacity MBtuh		Total Sys. KW†	Capacity MBtuh		Total Sys. KW†	Capacity MBtuh		Total Sys. KW†
		Total	Integ*		Total	Integ*		Total	Integ*		Total	Integ*		Total	Integ*		Total	Integ*		Total	Integ*		Total	Integ*	
25HCC560A30 Outdoor Section With FX4DNF061 Indoor Section																									
65 (18.3)	1750	20.70	19.04	3.28	27.02	24.83	3.42	33.72	30.75	3.56	41.23	36.62	3.72	49.82	45.33	3.93	57.86	57.86	4.12	67.41	67.41	4.34	78.26	78.26	4.58
	2000	21.11	19.43	3.32	27.50	25.28	3.45	34.30	31.27	3.58	42.09	37.39	3.72	50.38	45.85	3.90	58.60	58.60	4.07	68.57	68.57	4.25	79.11	79.11	4.49
	2250	21.49	19.77	3.37	27.92	25.66	3.49	34.77	31.71	3.60	43.47	38.61	3.77	50.91	46.33	3.90	59.23	59.23	4.06	69.29	69.29	4.21	79.67	79.67	4.43
70 (21.1)	1750	19.65	18.07	3.42	26.01	23.91	3.57	32.79	29.90	3.72	40.18	35.69	3.88	49.10	44.68	4.11	57.00	57.00	4.30	66.31	66.31	4.55	77.15	77.15	4.78
	2000	20.06	18.45	3.46	26.49	24.34	3.59	33.34	30.39	3.73	40.83	36.26	3.88	49.67	45.20	4.08	57.72	57.72	4.26	67.32	67.32	4.46	78.01	78.01	4.68
	2250	20.43	18.80	3.50	26.91	24.73	3.63	33.81	30.82	3.76	41.39	36.76	3.89	50.19	45.68	4.08	58.34	58.34	4.24	68.30	68.30	4.40	78.62	78.62	4.63
75 (23.9)	1750	18.54	17.06	3.56	24.96	22.94	3.72	31.79	28.98	3.88	39.14	34.76	4.06	48.41	44.05	4.30	56.16	56.16	4.50	65.21	65.21	4.76	76.04	76.04	4.99
	2000	18.95	17.44	3.60	25.43	23.37	3.75	32.33	29.47	3.90	39.76	35.31	4.05	49.00	44.59	4.27	56.88	56.88	4.45	66.27	66.27	4.66	76.93	76.93	4.89
	2250	19.32	17.77	3.65	25.85	23.76	3.79	32.79	29.90	3.92	40.31	35.80	4.06	49.45	45.00	4.26	57.47	57.47	4.43	67.20	67.20	4.61	77.54	77.54	4.83

HEATING INDOOR MODEL	CAPACITY	POWER	FURNACE MODEL
*FX4DN(B,F)061	1.00	1.00	
FB4CNF060	0.98	1.03	
FE4ANB006	0.98	0.98	
FV4BNB006	0.98	0.98	
FV4CNB006	0.98	0.98	
FX4CN(B,F)060	0.98	0.99	
FY4ANB060	1.00	1.05	
FY5BNB060	1.00	1.05	
CAP**6021A**	0.99	1.04	
CAP**6024A**	0.99	1.04	
CAP**6025A**	0.99	1.04	
CNPH*6024A**	0.99	1.04	
CNPH*6124A**	0.99	1.03	
CNPV*6024A**	0.99	1.04	
CNPV*6124A**	0.99	1.02	
CSPH*6012A**	0.99	1.03	
CAP**6021A**	0.99	1.04	58CV(A,X)110−20
CNPH*6024A**	0.99	1.04	58CV(A,X)110−20
CNPH*6124A**	0.99	1.03	58CV(A,X)110−20
CSPH*6012A**	0.99	1.03	58CV(A,X)110−20
CAP**6024A**	0.99	1.03	58CV(A,X)135−22
CNPH*6024A**	0.99	1.03	58CV(A,X)135−22

HEATING INDOOR MODEL	CAPACITY	POWER	FURNACE MODEL
CNPH*6124A**	0.99	1.02	58CV(A,X)135−22
CNPV*6024A**	0.99	1.03	58CV(A,X)135−22
CNPV*6124A**	0.99	1.00	58CV(A,X)135−22
CSPH*6012A**	0.99	1.02	58CV(A,X)135−22
CAP**6024A**	0.99	1.02	58CV(A,X)155−22
CNPH*6024A**	0.99	1.02	58CV(A,X)155−22
CNPH*6124A**	0.99	1.01	58CV(A,X)155−22
CNPV*6024A**	0.99	1.02	58CV(A,X)155−22
CNPV*6124A**	0.99	1.00	58CV(A,X)155−22
CSPH*6012A**	0.99	1.01	58CV(A,X)155−22
CNPH*6024A**	1.02	1.08	58HDV080−−20
CNPH*6124A**	1.04	1.09	58HDV080−−20
CSPH*6012A**	1.02	1.07	58HDV080−−20
CAP**6025A**	1.02	1.08	58HDV100−−20
CNPH*6024A**	1.02	1.08	58HDV100−−20
CNPH*6124A**	1.03	1.08	58HDV100−−20
CNPV*6024A**	1.02	1.08	58HDV100−−20
CNPV*6124A**	1.03	1.06	58HDV100−−20
CSPH*6012A**	1.02	1.06	58HDV100−−20
CNPH*6024A**	0.99	1.06	58ME(B,C)080−16
CSPH*6012A**	0.99	1.05	58ME(B,C)080−16
CAP**6021A**	0.99	1.04	58ME(B,C)100−20

HEATING INDOOR MODEL	CAPACITY	POWER	FURNACE MODEL
CNPH*6024A**	0.99	1.04	58ME(B,C)100−20
CNPH*6124A**	0.99	1.03	58ME(B,C)100−20
CSPH*6012A**	0.99	1.02	58ME(B,C)100−20
CAP**6024A**	0.99	1.03	58ME(B,C)120−20
CNPH*6024A**	0.99	1.03	58ME(B,C)120−20
CNPH*6124A**	0.99	1.02	58ME(B,C)120−20
CNPV*6024A**	0.99	1.03	58ME(B,C)120−20
CNPV*6124A**	0.99	1.00	58ME(B,C)120−20
CSPH*6012A**	0.99	1.02	58ME(B,C)120−20
CNPV*6124A**	0.99	1.02	58MV(B,C)120−20
CSPH*6012A**	0.99	1.04	58MV(B,C)120−20
CAP**6021A**	0.99	1.03	58PH*110−20
CNPH*6024A**	0.99	1.03	58PH*110−20
CNPH*6124A**	0.99	1.02	58PH*110−20
CSPH*6012A**	0.99	1.01	58PH*110−20
CAP**6024A**	0.99	1.04	58PH*135−20
CNPH*6024A**	0.99	1.04	58PH*135−20
CNPH*6124A**	0.99	1.03	58PH*135−20
CNPV*6024A**	0.99	1.04	58PH*135−20
CNPV*6124A**	0.99	1.01	58PH*135−20
CSPH*6012A**	0.99	1.02	58PH*135−20

NOTE: When the required data falls between the published data, interpolation may be performed. Extrapolation is not an acceptable practice.

* The Btuh heating capacity values shown are net integrated values from which the defrost effect has been subtracted. The Btuh heating from supplement heaters should be added to those values to obtain total system capacity.

† The kW values include the compressor, outdoor fan motor, and indoor blower motor. The kW from supplement heaters should be added to these values to obtain total system kilowatts.

EDB — Entering Dry Bulb

GUIDE SPECIFICATIONS
GENERAL

System Description

Outdoor-mounted, air-cooled, split-system heat pump unit suitable for ground or rooftop installation. Unit consists of a hermetic compressor, an air-cooled coil, propeller-type condenser fan, and a control box. Unit will discharge supply air upward as shown on contract drawings. Unit will be used in a refrigeration circuit to match up to a packaged fan coil or coil unit.

Quality Assurance

— Unit will be rated in accordance with the latest edition of AHRI Standard 240.

— Unit will be certified for capacity and efficiency, and listed in the latest AHRI directory.

— Unit construction will comply with latest edition of ANSI/ ASHRAE and with NEC.

— Unit will be constructed in accordance with UL standards and will carry the UL label of approval. Unit will have C-UL approval.

— Unit cabinet will be capable of withstanding Federal Test Method Standard No. 141 (Method 6061) 500-hr salt spray test.

— Air-cooled condenser coils are pressure tested and the outdoor unit is leak tested.

— Unit constructed in ISO9001 approved facility.

Delivery, Storage, and Handling

— Unit will be shipped as single package only and is stored and handled per unit manufacturer's recommendations.

Warranty (for inclusion by specifying engineer)

— U.S. and Canada only.

PRODUCTS

Equipment

— Factory assembled, single piece, air-cooled heat pump unit. Contained within the unit enclosure is all factory wiring, piping, controls, compressor, refrigerant charge Puron® (R-410A), and special features required prior to field start-up.

Unit Cabinet

— Unit cabinet will be constructed of galvanized steel, bonderized, and coated with a powder coat paint.

Fans

— Condenser fan will be direct-drive propeller type, discharging air upward.

— Condenser fan motors will be totally enclosed, 1-phase type with class B insulation and permanently lubricated bearings.

— Shafts will be corrosion resistant.

— Fan blades will be statically and dynamically balanced.

— Condenser fan openings will be equipped with steel wire safety guards.

Compressor

— Compressor will be hermetically sealed.

— Compressor will be mounted on rubber vibration isolators.

Condenser Coil

— Condenser coil will be air cooled.

— Coil will be constructed of aluminum fins mechanically bonded to copper tubes which are then cleaned, dehydrated, and sealed.

Refrigeration Components

— Refrigeration circuit components will include liquid-line shutoff valve with sweat connections, vapor-line shutoff valve with sweat connections, system charge of Puron® (R-410A) refrigerant, POE compressor oil, accumulator, and reversing valve.

Operating Characteristics

— The capacity of the unit will meet or exceed _____ Btuh at a suction temperature of _____ °F/°C. The power consumption at full load will not exceed _____ kW.

— Combination of the unit and the evaporator or fan coil unit will have a total net cooling capacity of _____ Btuh or greater at conditions of _____ CFM entering air temperature at the evaporator at _____ °F wet bulb and _____ °F/°C dry bulb, and air entering the unit at _____ °F/°C.

— The system will have a SEER of _____ Btuh/watt or greater at DOE conditions.

Electrical Requirements

— Nominal unit electrical characteristics will be _____ v, single phase, 60 hz. The unit will be capable of satisfactory operation within voltage limits of _____ v to _____ v.

— Nominal unit electrical characteristics will be _____ v, three phase, 60 hz. The unit will be capable of satisfactory operation within voltage limits of _____ v to _____ v.

— Unit electrical power will be single point connection.

— Control circuit will be 24v.

Special Features

— Refer to section of this literature identifying accessories and descriptions for specific features and available enhancements.

SYSTEM DESIGN SUMMARY

1. Intended for outdoor installation with free air inlet and outlet. Outdoor fan external static pressure available is less than 0.01-in. wc.
2. Minimum outdoor operating air temperature without low-ambient operation accessory is 55°F (12.8°C).
3. Maximum outdoor operating air temperature for cooling mode is 125°F (51.7°C).
4. Minimum outdoor operating air temperature for heating mode is –30°F (–34.4°C).
5. Maximum outdoor operating air temperature for heating mode is 66°F (18.9°C).
6. For reliable operation, unit should be level in all horizontal planes.
7. For interconnecting refrigerant tube lengths greater than 80 ft (23.4 m) and/or elevation differences between indoor and outdoor units greater than 20 ft (6.1 m), consult Residential Piping and Longline Guideline and Service Manual available from equipment distributor.
8. If any refrigerant tubing is buried, provide a 6 in. (152.4 mm) vertical rise to the valve connections at the unit. Refrigerant tubing lengths up to 36 in. (914.4 mm) may be buried without further consideration. Do not bury refrigerant lines longer than 36 in. (914.4 mm).
9. Use only copper wire for electric connection at unit. Aluminum and clad aluminum are not acceptable for the type of connector provided.
10. Do not apply capillary tube indoor coils to these units.
11. Factory-supplied filter drier must be installed.

Copyright 2010 Carrier Corp. • 7310 W. Morris St. • Indianapolis, IN 46231 Printed in U.S.A. Edition Date: 01/10 **Catalog No. 25HCC5–1PD**

Manufacturer reserves the right to discontinue, or change at any time, specifications or designs without notice and without incurring obligations. Replaces: New