38GVM / 40GVM
Multi–Split High–Wall Ductless Split System
38GVM – Size 18k, 24k, 30k, 36k and 42k
40GVM – Size 9k, 12k, and 18k

Carrier
turn to the experts

Product Data

INDUSTRY LEADING FEATURES / BENEFITS

AN INEXPENSIVE AND CREATIVE SOLUTION TO DESIGN PROBLEMS.

The 38GVM/40GVM ductless inverter driven multi-split system provides individual comfort control for up to 5 separate zones. Two, three, four or five space-saving High Wall ductless fan coils are matched with one outdoor heat pump. The indoor fan coils are connected to the outdoor unit by refrigerant tubing and wires.

The fan coils are mounted on the wall, near the ceiling. This selection of fan coils permits inexpensive and creative solutions to design problems such as:

- When adding air conditioning to spaces that are heated by hydronic or electric heat and have no ductwork.
- Historical renovations or any application where preserving the look of the original structure is essential.
- Commercial add-on jobs where the existing air conditioning system cannot be stretched.

These compact indoor fan coil units take up very little space in the room and do not obstruct windows. The fan coils are attractively styled to blend with most room decors.

Advanced system components incorporate innovative technology to provide reliable cooling and heating performance at low sound levels.

INVERTER TECHNOLOGY - COMFORT

The inverter driven compressor is designed to run at various input power frequencies (Hz) which controls the motor speed of the compressor.

Even Temperature – The control package, including the inverter, monitors outdoor and indoor temperatures as they relate to the selected indoor set point and adjusts the speed of the compressor to match the load and keep the system operating continuously rather than cycling and creating temperature swings. This translates to higher comfort levels for the occupants.

Rapid Pull Down/Warm-Up – Comfort is increased by the ability to the inverter system to ramp up the compressor speed enabling the system to reach the user selected room temperature set point quicker.

Humidity Control – Running the system for longer periods and continuously varying the compressor speed will enhance the humidity control.

INDIVIDUAL ROOM COMFORT

Maximum comfort is provided because each space can be controlled individually based on the usage pattern. The air sweep feature provided permits optimal room mixing to eliminate hot and cold spots for the occupant comfort.

LOW SOUND LEVELS

When noise is a concern, ductless split systems are the answer. The indoor units are whisper quiet. There are no compressors indoors, either in the conditioned space or directly over it, and there is none of the noise usually generated by air being forced through ductwork.

When sound ordinances and proximity to neighbors demand quiet operation, the 38GVM unit is the right choice. With the inverter technology, these units run at lower speeds most of the time resulting in reduced sound levels.

INVERTER TECHNOLOGY – ENHANCED ECONOMICAL OPERATION

Ductless systems are inherently economical to operate. Individual rooms are heated or cooled only when required, and since the air is delivered directly to the space, there is no need to use additional energy to move the air in the ductwork. This economical operation is enhanced further when the inverter system output matches the load resulting in a more efficient system.

EASY-TO-USE CONTROLS

The high-wall systems have microprocessor-based controls to provide the ultimate in comfort and efficiency. The user friendly wireless remote control provides the interface between the user and the unit.

SECURE OPERATION

If security is an issue, outdoor and indoor units are connected only by refrigerant piping and wiring to prevent intruders from crawling through ductwork or wall openings. In addition, since the 38GVM can be installed close to an outside wall, coils are protected from vandals and severe weather.

FAST INSTALLATION

This compact ductless split system is simple to install. A mounting bracket is included with the indoor units and only wires and piping need to be run between the indoor and outdoor units. These units are fast and easy to install ensuring minimal disruption to customers in homes or workplace. This makes the 38/40GVM systems the equipment of choice for retrofit applications.

SIMPLE SERVICING AND MAINTENANCE

Removing the top panel of the outdoor unit provides immediate access to the control compartment, providing the service technician access to the diagnostic LEDs to facilitate the troubleshooting process. In addition, the draw-thru design of the outdoor unit means that dirt accumulates on the outside surface of the coil. Coils can be cleaned quickly from the inside using a pressure hose and detergent.

On the indoor units, service and maintenance expense is reduced due to the permanent easy to clean filters. Also, error codes are displayed on the front panel to alert the user to certain system malfunctions

BUILT-IN RELIABILITY

Ductless split system indoor and outdoor units are designed to provide years of trouble-free operation.

Both the indoor and outdoor units are well protected. Whenever the microprocessor detects abnormal conditions, the unit will stop and an error code is displayed.

Inverter systems provide additional reliability due to soft start. This refers to the ability of the inverter to start the compressor motor using reduced voltage and reduced current. This feature is beneficial from an electrical standpoint (eliminates current spikes) as well as an overall reliability standpoint due to reduced stress on all associated system components.

ACCESSORIES

A condensate pump accessory is available to provide installation flexibility for those applications where gravity cannot be used to dispose of the condensate.

AGENCY LISTINGS

All systems are listed with AHRI (Air conditioning, Heating, and Refrigeration Institute) and are ETL certified per UL 1995 standard.

MODEL NUMBER NOMENCLATURE

INDOOR UNIT

40 — Fan Coil Unit

GVM — **Unit Type**
GVM – Multi High Wall

009 — **Nominal Capacity**
009 – 3/4 Ton
012 – 1 Ton
018 – 1–1/2 Ton

– – –

3 — **Voltage**
3 – 208/230–1–60

OUTDOOR UNIT

38 — Outdoor Unit

GVM — **Unit Type**
GVM – Heat Pump

2 — **Number of Ports**
2 – Ports
3 – Ports
4 – Ports
5 – Ports

18 — **Nominal Capacity**
18 – 1–1/2 Tons
24 – 2 Tons
30 – 2–1/2 Tons
36 – 3 Tons
42 – 3–1/2 Tons

– – –

3 — **Voltage**
3 – 208/230–1–60

AHRI CERTIFIED™ www.ahridirectory.org

Use of the AHRI Certified TM Mark indicates a manufacturer's participation in the program For verification of certification for individual products, go to www.ahridirectory.org.

INTERTEK ETL LISTED C US

STANDARD FEATURES AND ACCESSORIES

Ease of Installation	
Mounting Bracket	S
Low Voltage Controls	S
Comfort Features	
Microprocessor Control	S
Wireless Remote Control	S
Rapid Cooling and Heating	S
Automatic Air Sweep	S
Cold Blow Prevention	S
Continuous Fan	S
Auto Restart Function	S
Auto Changeover	S
Energy Saving Features	
Inverter Driven Compressor	S
Sleep Mode	S
24 Hour Stop/Start Timer	S
Safety And Reliability	
Indoor Unit Freeze Protection	S
3 Minute Compressor Time Delay	S
High Compressor Discharge Temperature	S
Low Voltage Protection	S
Compressor Overload Protection	S
Compressor Over Current Protection	S
IPM Module Protection	S
Ease of Service	
Cleanable Filters	S
Diagnostic LED's On Outdoor Board	S
Error Messages Displayed On Front Panel	S
Application Flexibility	
Condensate Pumps	A
Standard Warranty*	
7 Years Compressor limited Warranty	S
5 year Parts Limited Warranty	S

Legend
S Standard
A Accessory
***** For Residential applications. For Commercial applications, warranty is 1 year for parts and 5 years for compressor.

INDOOR UNITS

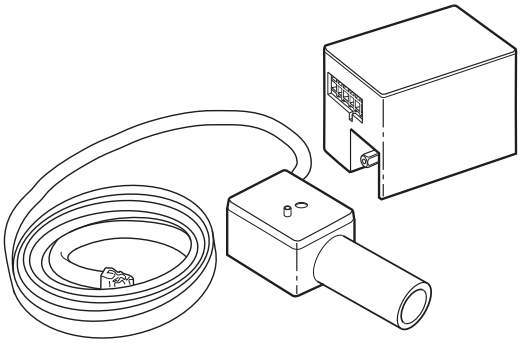

Fig. 1 – Condensate Pump Accessory

On high wall fan coils, the condensate pump accessory is recommended when adequate drain line pitch cannot be provided, or when the condensate must move up to exit.

The pump has a lift capability of 12 ft (3.6 m) on the discharge side if the pump is mounted in the fan coil or 6 ft (1.8 m) on the suction side if the pump is remote mounted.

AHRI* CAPACITY RATINGS

Model Numbers		Cooling			High Heating 47° F (8.33° C)		Low Heating 17° F (–8.33° C)
Outdoor Unit	Indoor Unit	Capacity (Btuh)	EER	SEER	Capacity (Btuh)	HSPF	Capacity (Btuh)
38GVM218–––3	2 x 40GVM009–––3	18,000	10.2	16.0	19,000	8.2	9,600
	40GVM009–––3 + 40GVM012–––3	18,000	10.2	16.0	19,000	8.2	9,600
38GVM224–––3	2 x 40GVM009–––3 + 40GVM012–––3	26,000	8.2	16.0	29,000	8.2	17,000
	3 x 40GVM009–––3	26,000	8.2	16.0	29,000	8.2	17,000
	40GVM009–––3 + 2 x 40GVM012–––3	26,000	8.2	16.0	29,000	8.2	17,000
38GVM430–––3	4 x 40GVM009–––3	29,000	7.3	16.0	30,400	8.2	16,500
	40GVM009–––3 + 2 x 40GVM012–––3 + 40GVM018–––3	29,000	7.3	16.0	30,400	8.2	16,500
38GVM436–––3	Non–Ducted FCU's	34,400	8.0	16.0	37,200	8.2	22,000
38GVM542–––3	Non–Ducted FCU's	40,000	9.3	16.0	43,000	8.0	24,800

*Air Conditioning, Heating & Refrigeration Institute
–– = N/A
Legend
EER – Energy Efficiency Ratio
HSPF – Heating Seasonal Performance Factor
SEER – Seasonal Energy Efficiency Ratio
NOTES:
1. Ratings are net values reflecting the effects of circulating fan heat. Ratings are based on: Cooling Standard: 80°F (26.67°C) db, 67°F (19.44°C) wb air entering indoor unit and 95°F (35°C) db air entering outdoor unit. High Temperature Heating Standard: 70°F (21.11°C) db air entering indoor unit and 47°F (8.33°C) db, 43°F (6.11°C) wb air entering outdoor unit.
2. Ratings are based on 25 ft. (7.62 m) of interconnecting refrigerant lines.
3. All system ratings are based on fan coil units operating at high fan speed. Consult Physical Data tables for air flows at all available fan speeds.

DIMENSIONS - INDOOR

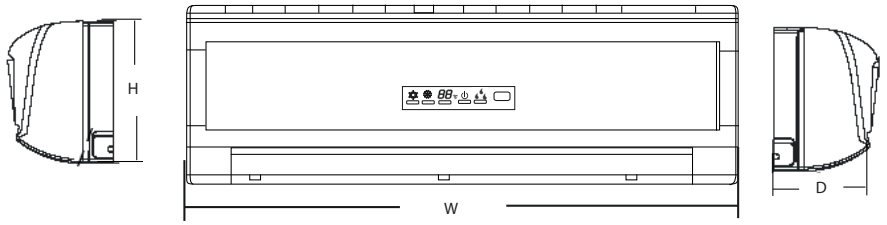

A08289

Unit Size	W In. (mm)	H In. (mm)	D In. (mm)	Net Operating Weight Lbs. (Kg)
9k	33.3 (846)	10.7 (272)	7.1 (180)	22.0 (10)
12k	33.3 (846)	10.7 (272)	7.1 (180)	22.0 (10)
18k	37.0 (940)	11.7 (297)	7.9 (201)	29.0 (13)

Fig. 2 – Indoor Unit Dimensions

DIMENSIONS - OUTDOOR

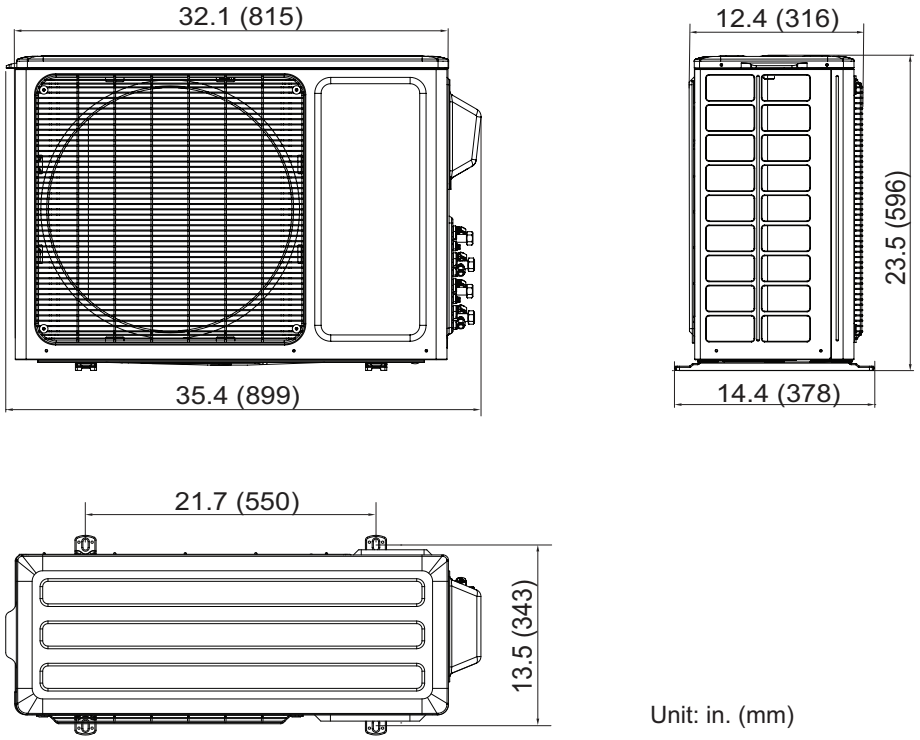

A12552

Fig. 3 – 38GVM018
Weight, lb (kg): Gross - 106 (48) / Net - 95 (43)

DIMENSIONS - OUTDOOR (CONTINUED)

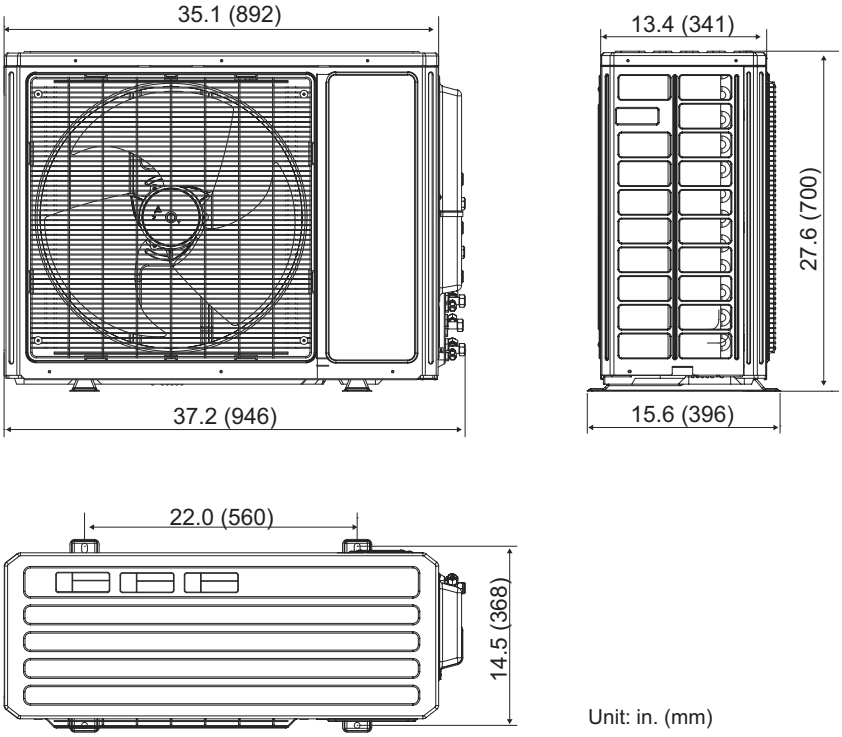

A12553

Fig. 4 – 38GVM024/030
024 Weight, lb (kg): Gross - 146 (66.2) / Net - 135 (61.2)
030 Weight, lb (kg): Gross - 148 (67.1) / Net - 137 (62.1)

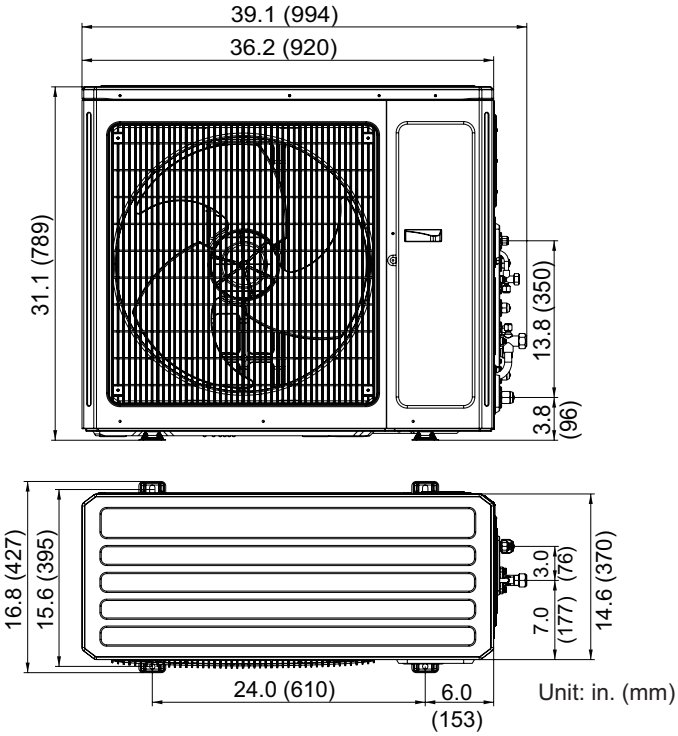

A12554

Fig. 5 – 38GVM036
Weight, lb (kg): Gross - 172 (78) / Net - 161 (73)

DIMENSIONS - OUTDOOR (CONTINUED)

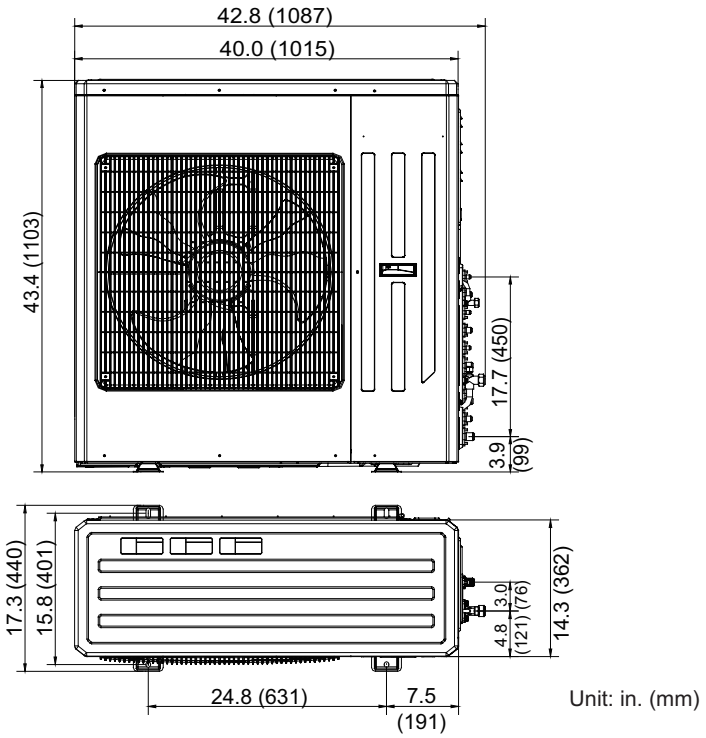

A12555

Fig. 6 – 38GVM042
Weight, lb (kg): Gross - 247 (112.3) / Net - 225 (102.3)

38/40GVM

CLEARANCES - INDOOR

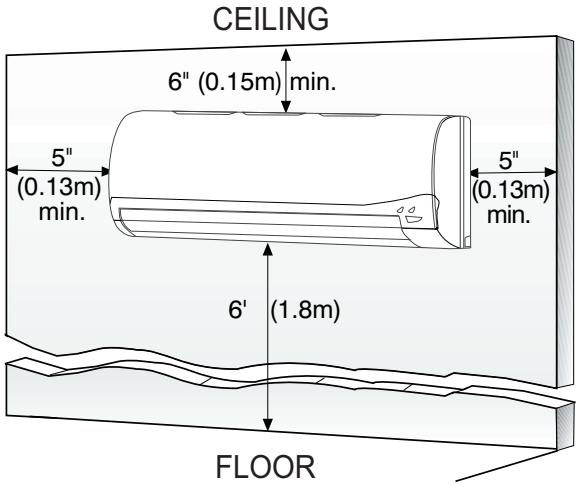

A07891

Fig. 7 – Indoor unit clearance

CLEARANCES - OUTDOOR

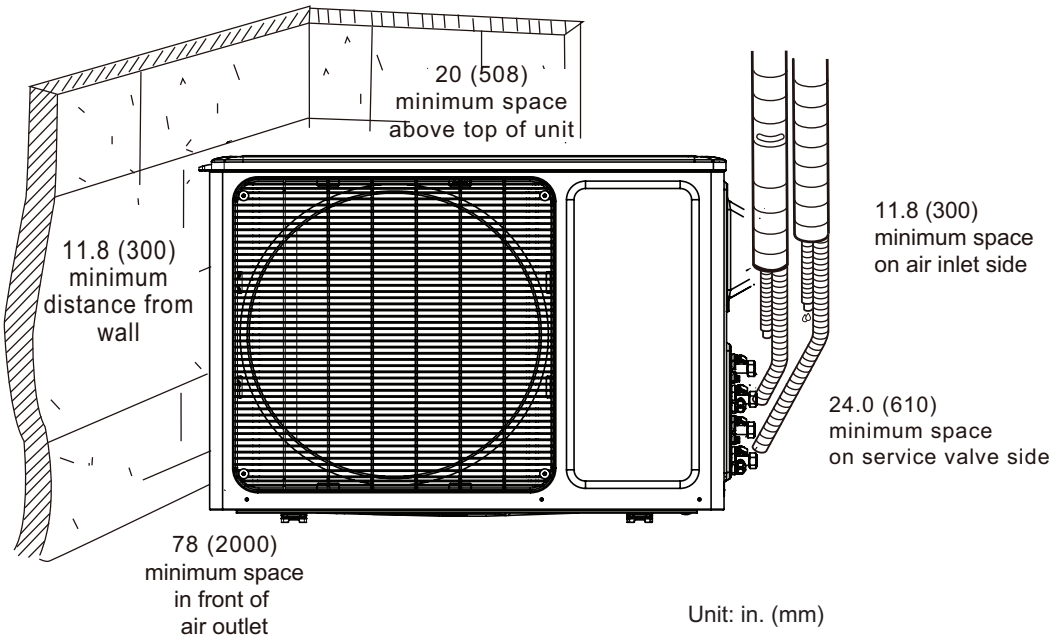

A112556

Fig. 8 – 38GVM018, 024, 030

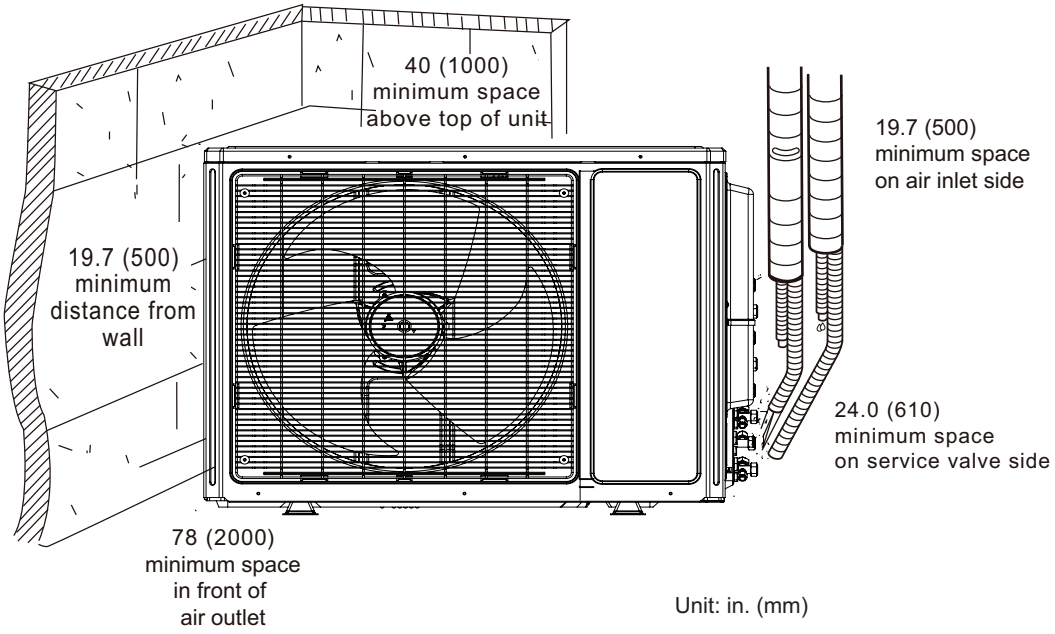

A112557

Fig. 9 – 38GVM036, 042

PHYSICAL DATA - 38GVM

Outdoor Unit 38GVM	218	324	430	436	542
System Voltage	208/230–1–60				
Control Voltage	Low Voltage Pulse DC				
Rated Cooling Capacity (Btuh)	18,000	26,000	29,000	34,400	40,000
Cooling Cap. Range Min – Max Btuh	7,000 – 21,000	7,500 – 33,000	7,500 – 33,000	8,530 – 34,000	8,500 – 46,400
Rated Heating Capacity (Btuh)	19,000	29,000	30,400	37,200	43,000
Heating Cap. Range Min – Max Btuh	2,500 – 22,600	7,500 – 35,000	7,500 – 35,000	10,600 – 40,900	10,600 – 47,760
Operating Weight lb (kg)	95 (43)	135 (61.2)	137 (62.1)	161 (73)	225 (102.3)
Refrigerant Type	R–410A				
Metering Device (At Outdoor Unit)	EXV				
Charge lb (kg)	3.0 (1.4)	4.9 (2.2)	4.9 (2.2)	6.4 (2.9)	10.6 (4.8)
Compressor					
Type	Inverter Driven Rotary				
Model	SNB130FGYMC	TNB220FLHMC			TNB306FPGMC
Outdoor Fan					
CFM hi/med/lo	1530 / 1354 / 942	1942 / 1707 / 1413		2177 (high)	3237 (high)
RPM hi/med/lo	830 / 670 / 500	690 / 600 / 500		820 / 640 / 560	860 / 650 / 550
Diameter (in)	17.5	20.5		21.7	22.4
Watts watts	60			120	140
Outdoor Coil					
Face Area (sq. ft)	4.6	6.3		7.3	11.6
No. Rows	2				
Fins per inch	18				
Refrigerant Lines					
Connection Type	Flare				
Liquid (Mix Phase) in OD (QTY)	1/4” (2)	1/4” (3)	1/4” (4)	1/4” (3), 3/8” (1)	1/4” (4), 3/8” (1)
Vapor Line in OD (QTY)	3/8” (2)	3/8” (3)	3/8” (4)	3/8” (2), 1/2” (1), 5/8”(1)	3/8” (2), 1/2” (2), 5/8”(1)
Total Piping ft. (m.)*	66 (20)	230 (70)			262 (80)
Max Piping to Any FCU ft. (m.)	33 (10)	66 (20)			82 (25)
Max Elevation (Between Indoors)	16.4 (5)	33 (10)		25 (7.5)	
Max Lift (Fan Coil Above) ft	16.4 (5)	33 (10)		50 (15)	
Max Drop (Fan Coil Below) ft	16.4 (5)	33 (10)		50 (15)	
External Finish	White				

*Refer to Long Line Application section

PHYSICAL DATA - 40GVM

Indoor Unit 40GVM	009	012	018
System Voltage	208/230–1–60		
Control Voltage	Low Voltage Pulse DC		
Electrical Connections	Indoor Unit Powered From Outdoor Unit		
Nominal Cooling Capacity (Btuh)	9,000	12,000	18,000
Nominal Heating Capacity (Btuh)	9,800	13,000	19,800
Operating Weight lb (kg)	22.0 (10)		29.0 (13)
Refrigerant Type	R–410A		
Metering Device (At Outdoor Unit)	EXV		
Moisture Removal Rate (pints/hr)	1.7	2.9	3.8
Indoor Fan			
RPM/CFM (Super High) – Cooling	1260 / 330	1280 / 341	1350 / 500
RPM/CFM (High) – Cooling	1100 / 294	1100 / 277	1200 / 459
RPM/CFM (Medium) – Cooling	950 / 253	950 / 253	1050 / 383
RPM/CFM (Low) – Cooling	750 / 218	750 / 217	900 / 324
RPM/CFM (Super High) – Heating	1320 / 330	1300 / 341	1420 / 500
RPM/CFM (High) – Heating	1200 / 294	1170 / 277	1250 / 459
RPM/CFM (Medium) – Heating	1100 / 253	1050 / 253	1150 / 383
RPM/CFM (Low) – Heating	750 / 218	950 / 217	1050 / 324
Motor Watts	20		
Blower Quantity … Size in	1 … 3.6 x 25.4		1 … 3.9 x 27.9
Indoor Coil			
Face Area (sq. ft)	1.85		2.3
No. Of Rows	2		
Fins Per Inch	18	18	16
Filters			
Quantity	2		
Controls	Integrated Microprocessor		
Wireless Remote	Standard		
Modes	Cool/Heat/Dry/Auto		
Fan Mode	High/Medium/Low/Auto		
Emergency Mode	Yes		
Defrost Method	Demand Defrost		
Diagnostics	Yes		
Air Sweep	Yes		
Soft Start	Yes		
Rapid Cooling/Heating	Yes		
Cold Blow Prevention	Yes		
Sleep Mode	Yes		
24 Hour Timer	Yes		
Auto Restart	Yes		
Freeze Protection On Indoor Unit	Yes		
Refrigerant Lines			
Connection Type	Flare		
Liquid (Mix Phase) in OD	1/4”		
Vapor Line in OD	3/8”	1/2”	
Condensate Drain			
Size in	ID = 1/2” OD = 5/8”		
External Finish	White		

APPLICATION DATA

UNIT SELECTION

When selecting a variable speed system match the system capacity range to the anticipated load range. Since a variable speed system can accommodate a wide range of loads it is important to understand the percentage of time that the system will be required to run at the both the maximum and the minimum load points. This differential is most evident when a residential application is compared with a commercial application.

Generally there will be more load diversification in the residential application (shifting from low load to high load).

The commercial application will tend to be more steady during the normal day time hours, and will go to low load levels after normal business hours. If it is anticipated that the system will be required to run at the maximum load point for the majority of the time, the next larger system capacity should be selected.

The tables below are guidelines for selecting the proper size for the application.

Outdoor Unit Model		Cooling Capacity (Btu/h)					Heating Capacity (Btu/h)				
38GVM218	**Type**	**Zone 1**	**Zone 2**	**Zone 3**	**Zone 4**	**Zone 5**	**Zone 1**	**Zone 2**	**Zone 3**	**Zone 4**	**Zone 5**
9K + 9K	Dual	9,000	9,000				9,500	9,500			
9K + 12K	Zone	9,000	12,000				9,500	13,000			
38MVM324		**Zone 1**	**Zone 2**	**Zone 3**	**Zone 4**	**Zone 5**	**Zone 1**	**Zone 2**	**Zone 3**	**Zone 4**	**Zone 5**
9K + 9K		9,000	9,000				9,500	9,500			
9K + 12K		9,000	12,000				9,500	13,000			
9K + 18K	Dual	8,400	16,600				9,000	18,000			
12K + 12K	Zone	12,000	12,000				13,000	13,000			
12K + 18K		10,000	15,000				11,200	16,800			
18K + 18K		12,750	12,750				14,250	14,250			
9K + 9K + 9K		8,667	8,667	8,667			9,667	9,667	9,667		
9K + 9K + 12K		8,000	8,000	10,000			9,000	9,000	11,000		
9K + 9K + 18K	Tri Zone	7,000	7,000	12,000			6,000	6,000	17,000		
9K + 12K + 12K		6,000	10,000	10,000			6,000	11,500	11,500		
12K + 12K + 12K		8,667	8,667	8,667			9,667	9,667	9,667		
38GVM430		**Zone 1**	**Zone 2**	**Zone 3**	**Zone 4**	**Zone 5**	**Zone 1**	**Zone 2**	**Zone 3**	**Zone 4**	**Zone 5**
9K + 9K		9,000	9,000				9,500	9,500			
9K + 12K		9,000	12,000				9,500	13,000			
9K + 18K	Dual	8,400	16,600				9,000	18,000			
12K + 12K	Zone	12,000	12,000				13,000	13,000			
12K + 18K		10,000	15,000				11,200	16,800			
18K + 18K		12,750	12,750				14,250	14,250			
9K + 9K + 9K		8,667	8,667	8,667			9,667	9,667	9,667		
9K + 9K + 12K		8,000	8,000	10,000			9,000	9,000	11,000		
9K + 9K + 18K		7,000	7,000	12,000			6,000	6,000	17,000		
9K + 12K + 12K	Tri Zone	6,000	10,000	10,000			6,000	11,500	11,500		
9K + 12K + 18K		6,800	7,200	13,000			7,050	9,350	14,100		
12K + 12K + 12K		8,667	8,667	8,667			9,667	9,667	9,667		
12K + 12K + 18K		6,500	6,500	15,000			8,700	8,700	13,100		
9K + 9K + 9K + 9K		7,250	7,250	7,250	7,250		7,625	7,625	7,625	7,625	
9K + 9K + 9K + 12K	Quad Zone	7,000	7,000	7,000	7,000		7,100	7,100	7,100	9,200	
9K + 9K + 12K + 12K		6,800	6,800	7,700	7,700		6,500	6,500	9,000	9,000	

APPLICATION DATA CONTINUED

Outdoor Unit Model		Cooling Capacity (Btu/h)					Heating Capacity (Btu/h)				
38GVM436		**Zone 1**	**Zone 2**	**Zone 3**	**Zone 4**	**Zone 5**	**Zone 1**	**Zone 2**	**Zone 3**	**Zone 4**	**Zone 5**
9K + 9K	Dual Zone	8,530	8,530				11,089	11,089			
9K + 12K		8,530	12,283				11,089	11,089			
9K + 18K		7,506	16,719				9,758	21,734			
12K + 12K		10,236	10,236				13,307	13,307			
12K + 18K		10,577	13,648				12,693	16,378			
18K + 18K		13,648	13,648				16,378	16,378			
9K + 9K + 9K	Tri Zone	8,189	8,189	8,189			9,008	9,008	9,008		
9K + 9K + 12K		6,995	7,336	10,236			7,694	8,069	11,260		
9K + 9K + 18K		7,165	7,165	15,354			8,598	8,598	18,425		
9K + 12K + 12K		7,506	11,089	11,089			9,008	13,307	13,307		
9K + 12K + 18K		6,142	10,065	13,477			7,370	12,078	16,173		
9K + 18K + 18K		5,971	11,771	11,771			7,165	14,126	14,126		
12K + 12K + 12K		9,895	9,895	9,895			11,874	11,874	11,874		
12K + 12K + 18K		8,530	8,530	12,624			10,236	10,236	15,149		
12K + 18K + 18K		9,212	12,283	12,283			11,055	14,740	14,740		
18K + 18K + 18K		9,895	9,895	9,895			11,874	11,874	11,874		
9K + 9K + 9K + 9K	Quad Zone	8,359	8,359	8,359	8,359		10,031	10,031	10,031	10,031	
9K + 9K + 9K + 12K		7,506	7,506	7,506	10,918		9,008	9,008	9,008	13,102	
9K + 9K + 9K + 18K		6,824	6,824	6,824	12,283		8,189	8,189	8,189	14,740	
9K + 9K + 12K + 12K		6,824	6,824	9,895	9,895		8,189	8,189	11,874	11,874	
9K + 9K + 12K + 18K		6,312	6,312	8,871	12,283		7,575	7,575	10,645	14,740	
9K + 9K + 18K + 18K		5,459	5,459	11,260	11,260		6,551	6,551	13,512	13,512	
9K + 12K + 12K + 12K		7,848	8,530	8,530	8,530		9,417	10,236	10,236	10,236	
9K + 12K + 12K + 18K		6,142	7,506	7,506	12,283		7,370	9,008	9,008	14,740	
12K + 12K + 12K + 12K		8,359	8,359	8,359	8,359		10,031	10,031	10,031	10,031	
38GVM542		**Zone 1**	**Zone 2**	**Zone 3**	**Zone 4**	**Zone 5**	**Zone 1**	**Zone 2**	**Zone 3**	**Zone 4**	**Zone 5**
9K + 12K	Dual Zone	8,530	11,942				10,663	14,928			
9K + 18K		7,506	16,719				9,383	20,899			
12K + 12K		10,236	10,236				12,795	12,795			
12K + 18K		10,577	16,719				13,222	20,899			
18K + 18K		16,207	16,207				20,260	20,260			
9K + 9K + 9K	Tri Zone	8,189	8,189	8,189			10,236	10,236	10,236		
9K + 9K + 12K		6,995	7,336	10,236			8,745	9,171	12,795		
9K + 9K + 18K		8,018	8,018	16,378			10,024	10,024	20,472		
9K + 12K + 12K		8,530	10,577	10,577			10,663	13,222	13,222		
9K + 12K + 18K		8,530	10,918	16,036			10,663	13,648	20,046		
9K + 18K + 18K		7,165	15,013	15,013			8,155	17,084	17,084		
12K + 12K + 12K		11,771	11,771	11,942			14,716	14,716	14,928		
12K + 12K + 18K		10,918	10,918	13,648			13,648	13,648	17,060		
12K + 18K + 18K		9,554	15,013	15,013			10,871	17,084	17,084		
18K + 18K + 18K		13,136	13,136	13,307			14,948	14,948	15,142		
9K + 9K + 9K + 9K	Quad Zone	8,871	8,871	8,871	8,871		11,089	11,089	11,089	11,089	
9K + 9K + 9K + 12K		8,189	8,189	8,189	10,918		10,236	10,236	10,236	13,648	
9K + 9K + 9K + 18K		7,848	7,848	7,848	16,036		8,929	8,929	8,929	18,247	
9K + 9K + 12K + 12K		7,165	7,165	10,577	10,577		8,957	8,957	13,222	13,222	
9K + 9K + 12K + 18K		6,824	6,824	10,577	15,354		7,766	7,766	12,038	17,473	
9K + 9K + 18K + 18K		6,483	6,483	13,307	13,307		7,377	7,377	15,142	15,142	
9K + 12K + 12K + 12K		7,848	10,577	10,577	10,577		8,929	12,038	12,038	12,038	
9K + 12K + 12K + 18K		7,165	8,701	8,701	15,013		8,155	9,902	9,902	17,084	
12K + 12K + 12K + 12K		9,895	9,895	9,895	9,895		11,260	11,260	11,260	11,260	
12K + 12K + 12K + 18K		8,359	8,359	8,359	14,501		9,513	9,513	9,513	16,500	
12K + 12K + 18K + 18K		7,848	7,848	11,942	11,942		8,929	8,929	13,590	13,590	
9K + 9K + 9K + 9K + 9K	Five Zone	7,916	7,916	7,916	7,916	7,916	9,008	9,008	9,008	9,008	9,008
9K + 9K + 9K + 9K + 12K		7,421	7,421	7,421	7,421	9,895	8,445	8,445	8,445	8,445	11,260
9K + 9K + 9K + 9K + 18K		6,824	6,824	6,824	6,824	12,283	7,766	7,766	7,766	7,766	13,979
9K + 9K + 9K + 12K + 12K		7,165	7,165	7,165	9,042	9,042	8,155	8,155	8,155	10,291	10,291
9K + 9K + 9K + 12K + 18K		6,483	6,483	6,483	8,274	11,857	7,377	7,377	7,377	9,414	13,491
9K + 9K + 9K + 18K + 18K		6,483	6,483	6,483	10,065	10,065	7,377	7,377	7,377	11,454	11,454
9K + 9K + 12K + 12K + 12K		6,483	6,483	8,871	8,871	8,871	7,377	7,377	10,096	10,096	10,096
9K + 9K + 12K + 12K + 18K		5,971	5,971	8,018	8,018	11,601	6,793	6,793	9,124	9,124	13,201
9K + 12K + 12K + 12K + 12K		6,483	8,274	8,274	8,274	8,274	7,377	9,414	9,414	9,414	9,414
12K + 12K + 12K + 12K + 12K		7,916	7,916	7,916	7,916	7,916	9,008	9,008	9,008	9,008	9,008

UNIT MOUNTING (INDOOR)

Mounting Bracket – The fan coil units are furnished with mounting bracket to hang the unit.

Support – Adequate support must be provided to handle the weight of all fan coils. Refer to the Physical Data section for weights, and the base unit dimensional drawings.

Unit Leveling – For reliable operation, units should be level in all planes.

Clearances – Minimum clearance as shown in Fig. 7.

Unit location – Select a location which will provide the best air circulation for the room. These units should be positioned as high as possible on the wall for the best air circulation. The unit return and discharge should not be obstructed by furniture, curtains, or anything which may cause the unit to short cycle or air to recycle. Place the unit in the middle of the selected wall (if possible). Use an outside wall, if available, to make piping easier, and place the unit so it faces the normal location of room occupants.

UNIT MOUNTING (OUTDOOR)

Support – A location which can bear the weight of outdoor unit. Refer to the Physical Data section for weights, and base dimensional drawings.

Unit Leveling – For reliable operation, units should be level in all planes.

Clearances – Minimum clearances, as shown in Fig. 8 and 9, must be provided for airflow. The outdoor units are designed for free-blow applications. Air inlets and outlets should not be restricted.

Unit location – A location which is convenient to installation and not exposed to strong wind.

SYSTEM OPERATING CONDITIONS

Cooling operating range:

	Maximum		Minimum	
	DB °F (°C)	WB °F (°C)	DB °F (°C)	WB °F (°C)
Outdoor Unit	118 (47.8)	–	23 (–5)	–

Heating operating range:

	Maximum		Minimum	
	DB °F (°C)	WB °F (°C)	DB °F (°C)	WB °F (°C)
Outdoor Unit	80 (26.7)	–	5 (–15)	–

METERING DEVICES

The outdoor unit has multiple electronic expansion valves to manage the refrigerant flow to the different indoor fan coils connected to that unit.

REFRIGERANT LINES

Routing – Refrigerant lines can be routed in any of the four directions shown in Fig. 10.

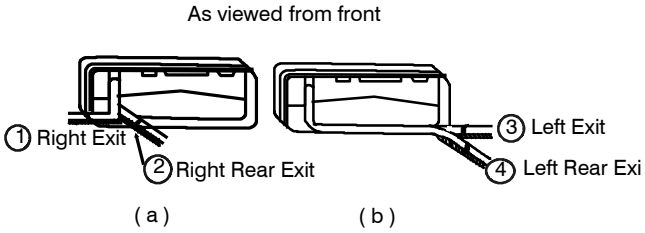

Fig. 10 – Refrigerant Line Routing

A08281

General Guidelines:

1. The 38GVM units are shipped with full charge of R-410A refrigerant. All charges, line sizing, and capacities are based on runs of 25 ft (7.6 m). For runs over these limits, consult the Installation Instructions for charge adjustments.
2. Refrigerant lines should not be buried in the ground. If it is necessary to bury the lines, not more than 36 inches (914 mm) should be buried. Provide a minimum of 6 inch (152 mm) vertical rise to service valves to prevent refrigerant migration.
3. Both lines must be insulated. Use a minimum of ½-inch (12.7 mm) thick insulation. Closed-cell insulation is recommended in all long-line applications.
4. Special consideration should be given to isolating interconnecting tubing from the building structure. Isolate the tubing so that vibration or noise is not transmitted into the structure.

Long Line Applications:

1. No change in line sizing is required.
2. Additional charge is required for line lengths above those mentioned in the General Guidelines section. Refer to the Installation Instructions for further detail.

DRAIN CONNECTIONS

Install drains to meet the local sanitation codes. If adequate gravity drainage cannot be provided, a field installed condensate pump accessory should be used. Refer to the Installation Instructions of the condensate pump for detailed specifications.

NOTE: The high wall fan coils have internal condensate trap. An external trap is not required.

Drain connections may be routed through alternate locations as shown in Fig. 11.

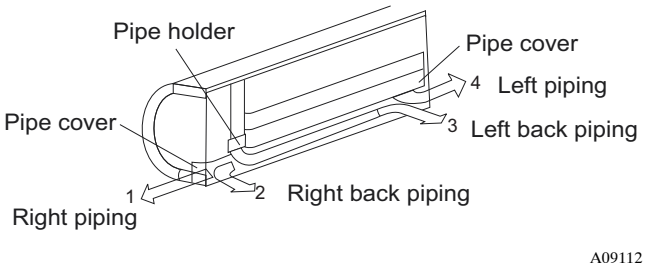

Fig. 11 – Piping Locations

WIRING

The main power is supplied to the outdoor unit. Four field supplied connecting cables from the outdoor unit to each of the indoor units are: L1, L2, Ground, and S for communication between the outdoor unit and each indoor unit.

CONTROL SYSTEM

The 38/40GVM unit is equipped with a microprocessor control to operate the system and give optimum levels of comfort and operating efficiency.

There are microprocessor boards and thermistors located in both the indoor and outdoor units. The thermistors monitor the system operation and control the operating mode. The change in the settings or the modes of operation, use the factory supplied wireless remote control.

The 38/40GVM unit has the following operating modes:

- Fan Only
- Auto
- Heating (on Heat Pumps only)
- Cooling
- Dehumidification (Dry)

FAN ONLY - In Fan Only mode, the system filters and circulates the room air without changing the room air temperature.

AUTO - In Auto mode, the system will automatically select one of the following operating modes: cooling, heating or fan only based on the difference between the room temperature and the set point temperature.

HEATING - In the Heating mode, the system heats and filters room air.

COOLING - When in Cooling mode, the fan runs all the time and the system cools, dries and filters room air.

DEHUMIDIFICATION (DRY) - in Dehumidification (Dry) mode, the system dries, filters and slightly cools room temperature. This mode does not take place of a dehumidifier.

In addition to the above modes that are selected by using the remote control, the unit can run in emergency mode by using a manual button. This mode is used when the remote is misplaced or the batteries in the remote have died. In this mode, the unit will run in AUTO mode with a predetermined set point (76°F/24.4°C)

WIRELESS REMOTE CONTROL

1. A wireless remote control is supplied for system operation.
2. Each battery-operated wireless remote control may be used to control more than one unit.
3. The wireless remote control has a range of 25 ft. (7.6 m).

SEQUENCE OF OPERATION

Simultaneous heating and cooling is not allowed. At start-up, the first indoor unit to call for operation (heating or cooling) will control from the preset position, the mode of operation for the rest of the indoor units connected to the same outdoor unit. If the other units conflict in mode with the first unit an error message will be displayed on those units.

When a unit is set to COOL, HEAT or DRY mode, the electronic expansion valve is first initialized (closed) and then is opened to a preset position.

Superheat heat for each fan coil (the ones that are energized) is monitored and the position of the electronic expansion valve is adjusted to ensure that each fan coil gets the appropriate amount of refrigerant to maintain the required superheat. After the set point is satisfied and the fan coil shuts off, the electronic expansion valve stays open for a specified time to ensure that system pressures equalize.

When the system is set for COOL, HEAT or DRY mode, the compressor speed is varied by comparing the indoor air temperature with the set point and continuously adjusting the compressor speed (to keep the compressor running as long as possible) in an effort to maintain the greatest comfort possible.

The indoor fan can be running in MANUAL or AUTO mode. When the fan is running in AUTO mode, the speed is determined by comparing the room temperature to the set point.

In COOLING mode, when the set point is satisfied, the fan will continue running. In HEATING mode, when the set point is satisfied, the fan speed will be reduced and then will run continuously until the coil temperature drops to a point cold air is blown on the occupants in the space, at which time the indoor fan is de-energized.

When the unit goes through the defrost cycle, the indoor fans are de-energized and the refrigerant is circulated through all the fan coils (even if they were off or on standby before the defrost cycle) to maximize the heat transfer surface area available for defrost operation.

AIR THROW DATA

Model Number	Approximate Air Throw ft. (m)			
	Low	Medium	High	Turbo
40GVM009– – –3	18 (5.5)	21 (6.4)	24 (7.3)	27 (8.2)
40GVM012– – –3	19 (5.8)	21 (6.4)	24 (7.3)	27 (8.2)
40GVM018– – –3	25 (7.6)	29 (8.8)	32 (9.8)	35 (10.7)

SOUND RATINGS

Outdoor Units

Model Number	Sound Power dBA	Sound Pressure dBA
38GVM218– – –3 (cool/heat)	66/66	56/56
38GVM324– – –3 (cool/heat)	66/66	56/56
38GVM430– – –3 (cool/heat)	66/66	56/56
38GVM436– – –3 (cool/heat)	69/69	59/59
38GVM542– – –3 (cool/heat)	68/68	58/58

Indoor Units

Model Number	Low		Medium		High		Turbo	
	Sound Power dBA	Sound Pressure dBA	Sound Power dBA	Sound Pressure dBA	Sound Power dBA	Sound Pressure dBA	Sound Power dBA	Sound Pressure dBA
40GVM009– – –3	36.0	26.0	45.0	35.0	47.0	37.0	51.0	41.0
40GVM012– – –3	38.0	28.0	46.0	36.0	48.0	38.0	52.0	42.0
40GVM018– – –3	45.0	35.0	50.0	40.0	54.0	44.0	56.0	46.0

NOTES:
1. Sound power ratings are per AHRI 270 and AHRI 350
2. Sound pressure ratings are estimated sound pressure, 3 feet (.91 m) from the unit, based on sound power data.

ELECTRICAL DATA

Outdoor Units

Unit Size	System Voltage	Operating Voltage*	Compressor		Outdoor Fan			MCA	MAX FUSE/CB Amp
	VOLT–PH–HZ	MAX/MIN	RLA	LRA	FLA	HP	W		
18 K	208/230–1–60	253/187	9.6	27	0.54	1/12	60	13	20
24 K			14.7	45	0.59			20	30
30 K			19.6	45				26	45
36 K			21.0	45	0.67	1/8	120	28	45
42 K			21.5	67	1.10	1/6	140	29	50

Indoor Units

Unit Size	System Voltage	Operating Voltage	Indoor Fan†	
	VOLT–PH–HZ	MAX/MIN	FLA	W
9 K	208/230–1–60	253/187	0.20	20
12 K				
18 K			0.32	

* Permissible limits of the voltage range at which the unit will operate satisfactorily

† Indoor fan powered from outdoor unit.

LEGEND

FLA – Full Load Amps

LRA – Locked Rotor Amps

MCA – Minimum Circuit Amps

RLA – Rated Load Amps

PART 1 – GENERAL

1.01 System Description

A. Outdoor air-cooled split system compressor sections suitable for on-the-ground, rooftop, wall hung or balcony mounting. Units shall consist of a variable speed rotary compressor, an air-cooled coil, propeller-type draw-through outdoor fan, reversing valve, accumulator, electronic expansion valves, multiple service valves, and controls that allows multiple indoor units to be connected to the outdoor unit. Units shall discharge horizontally as shown on the contract drawings. Units shall function as the outdoor component of an air-to-air heat pump system.

B. Units shall be used in a refrigeration circuit matched to one, two, three or four High Wall duct-free heat pump fan coil units.

1.02 Agency Listings

A. Unit construction shall comply with ANSI/ASHRAE 15, latest revision, and with NEC.\

B. Units shall be evaluated in accordance with UL standard 1995.

C. Units shall be listed in CEC directory.

D. Unit cabinet shall be capable of withstanding 500-hour salt spray test per Federal Test Standard no. 141 (method 6061).

E. Air-cooled condenser coils shall be leak tested at 573 psig.

1.03 Delivery, Storage, And Handling

Units shall be shipped in one piece and shall be stored and handled per manufacturer's recommendations.

1.04 Warranty (For Inclusion By Specifying Engineer)

PART 2 – PRODUCTS

2.01 Equipment

A. General:

Factory assembled, single piece, air-cooled outdoor unit. Contained within the enclosure shall be all factory wiring, piping, controls, and compressor.

B. Unit Cabinet:

1. Unit cabinet shall be constructed of galvanized steel, bonderized and coated with baked-enamel finish on inside and outside.
2. Unit access panel should be removable with minimal screws and shall provide full access to the compressor, fan, and control components.
3. Outdoor compartment shall be isolated and have an acoustic lining to assure quiet operation.

C. Fans:

1. Outdoor fans shall be direct-drive propeller type, and shall discharge air horizontally. Fan shall draw air through the outdoor coil.
2. Outdoor fan motors shall be multi-speed, totally-enclosed, single phase motors with permanently lubricated ball bearings. Motor shall be protected by internal thermal overload protection.
3. Shaft shall have inherent corrosion resistance.
4. Outdoor fan openings shall be equipped with metal/mesh PVC coated protection grille over fan.

D. Compressor

1. Compressor shall be fully hermetic variable speed rotary type.
2. Compressor shall be three phase, inverter driven.
3. Compressor shall be equipped with oil system, operating oil charge, and motor.
4. Motor shall be suitable for operation in refrigerant and oil atmosphere.
5. Compressor assembly shall be installed on rubber vibration isolators.
6. The inverter and compressor shall be protected against over temperature and over current.

E. Outdoor Coil:

Coil shall be constructed of Aluminum fins mechanically bonded to seamless copper tubes, which are cleaned, dehydrated and sealed.

F. Refrigerant Components:

Refrigerant circuit components shall include multiple brass external liquid line service valves with service gauge connection port, multiple suction line service valves with service gage connection port, accumulator, reversing valve, electronic expansion valves.

G. Safeties:

Operating safeties shall be factory selected, assembled, and tested. The minimum functions shall include the following:

1. Compressor discharge over temperature protection.
2. System low voltage protection.
3. Compressor overload protection.
4. Compressor over current protection.
5. IPM module protection.

H. Electrical Requirements:

1. Units shall operate on single-phase, 60 Hz power at 208/230 v.
2. Unit electrical power shall be a single point connection.
3. All power and control wiring must be installed per NEC and all local electrical codes.
4. Units shall have multiple terminal blocks to connect to multiple indoor units.

INDOOR WALL-MOUNTED DUCT-FREE UNITS

Size Range: 3/4, 1 and 1-1/2 Ton Nominal Cooling and Heating Capacity

Carrier Model Number: **40GVM**

PART 1 – GENERAL

1.01 System Description

Indoor, wall-mounted, direct expansion fan coils are matched with heat pump outdoor units.

1.02 Agency Listings

Unit shall be rated per AHRI Standards 210/240 and listed in the AHRI directory as a matched system.

1.03 Delivery, Storage, And Handling

Units shall be shipped in one piece and shall be stored and handled per manufacturer's recommendations.

1.04 Warranty (For Inclusion By Specifying Engineer)

PART 2 – PRODUCTS

2.01 Equipment

A. General:

Indoor, direct-expansion, wall-mounted fan coil. Unit shall be complete with cooling/heating coil, fan, fan motor, piping connectors, electrical controls, microprocessor control system, and integral temperature sensing. Unit shall be furnished with integral wall mounting bracket and mounting hardware.

B. Unit Cabinet:

Cabinet discharge and inlet grilles shall be attractively styled, high-impact polystyrene. Cabinet shall be fully insulated for improved thermal / acoustic performance.

C. Fans:

1. Fan shall be tangential direct-drive blower type with air intake at the top of the unit and discharge at the bottom front. Automatic, motor-driven vertical air sweep shall be provided standard.
2. Air sweep operation shall be useable selectable. The vertical sweep may be adjusted (using the remote control) and the horizontal air direction maybe be set manually.

D. Coil:

Coil shall be copper tube with aluminum fins and galvanized steel tube sheets. Fins shall be bonded to the tubes by mechanical expansion. A drip pan under the coil shall have a drain connection for hose attachment to remove condensate. Condensate pan shall have internal trap.

E. Motors:

Motors shall be totally enclosed, permanently lubricated ball bearing with inherent overload protection. Fan motors shall be 4-speed.

F. Controls:

Controls shall consist of a microprocessor-based control system which shall control space temperature, determine optimum fan speed, and run self diagnostics. The temperature control range shall be from 62°F to 84°F (16.7°C to 28.9°C).

The unit shall have the following functions as a minimum:

1. Automatic restart after power failure at the same operating conditions as at failure.
2. A timer function to provide a minimum 24-hour timer cycle for system Auto Start/Stop.
3. Wireless infrared remote control to enter set points and operating conditions.
4. Automatic air sweep control to provide on or off activation of air sweep louvers.
5. Dehumidification mode shall provide increased latent removal capability by modulating system operation and set point temperature.
6. Fan-only operation to provide room air circulation when no heating / cooling is required.
7. Diagnostics shall provide continuous checks of unit operation and warn of possible malfunctions. Error messages shall be displayed at the unit.
8. Fan speed control shall be user-selectable: high, medium, low or microprocessor controlled automatic operation during all operating modes.
9. Cold blow prevention control to ensure that cold air is not blown into the occupied space after the compressor is de-energized in the heating cycle.

The unit shall be protected against the following:

1. Indoor coil freeze up
2. Indoor coil high temperature protection shall be provided to detect excessive indoor discharge temperature when unit is in heat pump mode.

G. Filters:

Units shall have filter track with factory-supplied cleanable filters.

H. Electrical Requirements:

Indoor fan motor to operate at 208/230 volts. Power is supplied from the indoor unit.

I. Operating Characteristics:

The 40GVM system shall have a minimum listed SEER (seasonal energy efficiency ratio) of up to 16.0 SEER at AHRI conditions, and HSPF of up to 8.2.

J. Refrigerant Lines:

All units should have refrigerant line connections that can be oriented to connect from the left, right, or back of unit. Both refrigerant lines need to be insulated (on all systems).

K. Special Features (Field Installed):

1. Condensate Pump: The condensate pump shall remove condensate from the drain pan when gravity drainage cannot be used. Pump shall be designed for quiet operation. Pump shall consist of two parts: an internal reservoir/sensor assembly, and a remote sound-shielded pump assembly. A liquid level sensor in the reservoir shall stop cooling operation if the liquid level in the reservoir is unacceptable.

Copyright 2013 Carrier Corp. • 7310 W. Morris St. • Indianapolis, IN 46231

Edition Date: 01/13

Catalog No. 38–40GVM–1PD

Manufacturer reserves the right to change, at any time, specifications and designs without notice and without obligations.

Replaces: New