38AU
Air Cooled Condensing Units
60 Hz
With Puron® (R−410A) Refrigerant
Sizes 07−14

Carrier
turn to the experts

Installation, Start−Up and Service Instructions

TABLE OF CONTENTS

SAFETY CONSIDERATIONS 2

INSTALLATION GUIDELINES 2

Replacement/Retrofit — R-22 to Puron 2

Rated Indoor Airflow (cfm) 3

Matching 38AU Model to Evaporator Coil 10

INSTALLATION . . . . . 10 - 26

Jobsite Survey 10

Step 1 - Plan for Unit Location 10

Step 2 - Complete Pre-Installation Checks 10

Step 3 - Prepare Unit Mounting Support 11

Step 4 - Rig and Mount the Unit 11

Step 5 - Determine Refrigerant Line Sizes 11

Step 6 - Complete Refrigerant Piping Connections . . . 16

Step 7 - Install Accessories 19

Step 8 - Complete Electrical Connections 19

Step 9 - Wind Baffles for Low Ambient Controls . . . 26

PRE-START-UP 26

System Check 26

Turn On Crankcase Heater 26

Preliminary Charge 26

START-UP . . . . . 26 - 33

Preliminary Checks 26

Start Unit 27

OPERATING SEQUENCE 34

Base Unit Controls 34

Indoor (Supply) Fan 34

Cooling, Unit Without Economizer 34

38AUDC12, Unit with Hot Gas Bypass (HGBP) 34

Cooling, Unit with Economizer 36

Heating 36

ROUTINE SYSTEM MAINTENANCE 36

Quarterly Inspection (and 30 days after initial start) . . . 36

Seasonal Maintenance 36

SERVICE . . . . . 36 - 44

Refrigeration System 36

Compressor Oil 36

Servicing Systems on Roofs with Synthetic Materials 36

Liquid Line Filter Drier 37

Filed Refrigerant Access Ports 37

Factory High-Flow Access Ports 37

Hot Gas Bypass Valve Adjustments 37

Comfort Alert Diagnostic Module 38

Compressor Protection 40

Crankcase Heater 40

Low-Pressure Switch 40

High-Pressure Switch 40

Outdoor Fans 40

Lubrication 40

Routine Cleaning of Round-Tube Plate Fin (RTPF) Coils 43

Fastener Torque Values 44

TROUBLESHOOTING . . . . . 45 - 46

APPENDIX A
Air Conditioner & Heat Pump with Puron® — Quick Reference Guide 47

APPENDIX B
Wiring Diagram List 47

APPENDIX C
Low Ambient Option — Factory Installed 48

START-UP CHECKLIST . . . . . 55 - 56

SAFETY CONSIDERATIONS

Improper installation, adjustment, alteration, service, maintenance, or use can cause explosion, fire, electrical shock or other conditions which may cause personal injury or property damage. Consult a qualified installer, service agency, or your distributor or branch for information or assistance. The qualified installer or agency must use factory-authorized kits or accessories when modifying this product. Refer to the individual instructions package

Follow all safety codes. Wear safety glasses and work gloves. Use quenching cloths for brazing operations and have a fire extinguisher available. Read these instructions thoroughly and follow all warnings or cautions attached to the unit. Consult local building codes and appropriate national electrical codes (in USA, ANSI/NFPA70, National Electrical Code (NEC); in Canada, CSA C22.1) for special requirements.

It is important to recognize safety information. This is the safety-alert symbol ⚠. When you see this symbol on the unit and in instructions or manuals, be alert to the potential for personal injury.

Understand the signal words DANGER, WARNING, CAUTION, and NOTE. These words are used with the safety-alert symbol. DANGER identifies the most serious hazards which **will** result in severe personal injury or death. WARNING signifies hazards which **could** result in personal injury or death. CAUTION is used to identify unsafe practices, which **may** result in minor personal injury or product and property damage. NOTE is used to highlight suggestions which **will** result in enhanced installation, reliability, or operation.

⚠ WARNING

ELECTRICAL SHOCK HAZARD

Failure to follow this warning could cause in personal injury or death.

Before performing service or maintenance operations on unit, always turn off main power switch to unit and install lockout tag. Unit may have more than one power switch.

⚠ WARNING

UNIT OPERATION AND SAFETY HAZARD

Failure to follow this warning could cause in personal injury,death and/or equipment damage.

Puron® (R-410A) refrigerant systems operate at higher pressures than standard R-22 systems. Do not use R-22 service equipment or components on Puron refrigerant equipment.

⚠ WARNING

PERSONAL INJURY AND ENVIRONMENTAL HAZARD

Failure to follow this warning could cause in personal injury or death.

Relieve pressure and recover all refrigerant before system repair or final unit disposal.

Wear safety glasses and gloves when handling refrigerants. Keep torches and other ignition sources away from refrigerants and oils.

⚠ CAUTION

CUT HAZARD

Failure to follow this caution may result in personal injury.

Sheet metal parts may have sharp edges or burrs. Use care and wear appropriate protective clothing, safety glasses and gloves when handling parts and servicing 38AU units.

INSTALLATION GUIDELINE

Replacement/Retrofit — R-22 to Puron®

Replacement/retrofit installations require change-out of outdoor unit, metering device, and filter driers. Change-out of indoor coil (evaporator) and interconnecting tubing is recommended.

Existing evaporator coil – If the existing evaporator coil may be re-used, check with the coil manufacturer to verify the coil construction is suitable for operation with the higher pressures of Puron® (R-410A). Also determine if the existing TXV valve is compatible with R-410A, replace if necessary. The minimum factory test pressure rating must be 250 psig (1725 kPa). Existing coil will need to be purged with Nitrogen to remove as much mineral oil as possible to eliminate cross contamination of oils.

Acid test – If the existing system is being replaced because of a compressor electrical failure, assume acid is in system. If system is being replaced for any other reason, use an approved acid test kit to determine acid level. If even low levels of acid are detected, install a 100 percent activated alumina suction-line filter drier in addition to the replacement liquid-line filter drier. Remove the suction line filter drier as soon as possible, with a maximum of 72 hr of operation. Recommendation: Install a ball valve in the liquid line at the filter drier location when installing a suction filter in the suction line.

Existing refrigeration piping – Reuse of existing refrigerant piping involves three issues: quality (strength) of existing tubing, cleanliness and tube size. Inspect all tube segments and joints for signs of damage, corrosion or poor brazing. Flush the interconnecting piping system with dry Nitrogen to eliminate as much trace of mineral oil as possible.

Same tube sizes are capable of handling higher flowrates (expressed as tons of cooling capacity) with Puron refrigerant compared to R-22 at constant pressure drops. For example, a $^1/_2$-inch OD liquid line is rated at 33% higher tons with Puron® than with R-22 (at 5°F pressure drop). A 1 $^1/_8$-inch OD suction line is rated at 53% higher tons with Puron than with R-22 (at 2°F pressure drop). Refrigeration lines selected for R-22 use are typically oversized for Puron applications. Carefully check the existing suction line size against the table for maximum size (see Table 8); replace vertical riser segments if necessary. Check existing liquid line size against sizing data in Table 5 or 6; replace with smaller lines when feasible.

Installation –

1. Remove the existing evaporator coil or fan coil and install the replacement coil when appropriate.
2. Drain oil from low points and traps in suction line tubing (and hot gas bypass tubing if appropriate) and evaporator if they were not replaced. Removing oil from evaporator coil may require purging of the tubing with dry nitrogen.
3. Unless indoor unit is equipped with a Puron® approved metering device, change the metering device to a thermal expansion valve (TXV) designed for Puron® (R-410A).
4. Remove the existing outdoor unit. Install the new outdoor unit according to these installation instructions.
5. Install a new field-supplied liquid-line filter drier at the indoor coil just upstream of the TXV or fix orifice metering device.
6. If a suction line filter drier is also to be installed, install suction line drier downstream of suction line service valve at condensing unit.

⚠ CAUTION

UNIT DAMAGE HAZARD

Failure to follow this caution may result in equipment damage or improper operation.

Never install suction-line filter drier in the liquid-line of a Puron® system.

7. If required, install a 100% activated alumina suction line filter drier at the outdoor unit.
8. Evacuate and charge the system according to the instructions in this installation manual.
9. Operate the system for 10 hr. Monitor the pressure drop across the suction line filter drier. If pressure drop exceeds 3 psig (21kPa), replace suction-line and liquid-line filter driers. Be sure to purge system with dry nitrogen and evacuate when replacing filter driers. Continue to monitor the pressure drop across suction-line filter drier. Repeat filter changes if necessary. Never leave suction-line filter drier in system longer than 72 hr (actual time).

Rated Indoor Airflow (cfm)

The table below lists the rated indoor airflow used for the AHRI efficiency rating for the units covered in this document.

38AUZ with 40RUA

Model Numbers	Full Load Airflow (cfm)
38AUZ*07 – 40RUA*07	2400
38AUZ*08 – 40RUA*08	3000
38AUZ*12 – 40RUA*12	4000
38AUZ*14 – 40RUA*14	4375

38AUD with 40RUA

Model Numbers	Full Load Airflow (cfm)
38AUD*12 – 40RUA*12	4000
38AUD*14 – 40RUA*14	4400

Identify Factory Options —

Factory options will affect 38AU unit pipe sizing selections. Coil type impacts liquid lift limits; Hot Gas Bypass impacts the selection of suction tube size in vertical riser segments. Check this unit's Model Number against the Model Number Nomenclature, Fig. 1. Determine the significance of this unit's values in Position 9 (Coil type) and Position 6 (Hot Gas Bypass, 38AUDC12 only). Copy the unit's Model Number from the unit's dataplate into the open line in the header above Fig. 1 to facilitate this step.

Enter this unit's Model Number																		
Position	1	2	3	4	5	6	7	8	9	10	11	12	13	14	15	16	17	18
Example	**3**	**8**	**A**	**U**	**D**	**C**	**1**	**2**	**A**	**0**	**A**	**6**	**A**	**0**	**A**	**0**	**A**	**0**

Model Type
38AU= Carrier Condensing Unit
Puron® R−410A Refrigerant

Type of Coil
Z = Single Circuit, A/C Scroll Compressor
D = Dual Circuit, A/C Scroll Compressor

Refrigerant Options
A = None
B = Low Ambient
C = Hot Gas Bypass (38AUD size 12 only)

Nominal Tonnage
07 = 6 Tons
08 = 7.5 Tons
12 = 10 Tons
14 = 12.5 Tons

Not Used
A = Not Used

Not Used
0 = Not Used

Coil Options
RTPF
A= Cu/Al
B = Precoat (Cu/Al)
C = E-Coat (Cu/Al)
E = Cu/Cu
M= Cu/Al with Louvered Hail Guard
N = Precoat (Cu/Al) with Louvered Hail Guard
P = E-Coat (Cu/Al) with Louvered Hail Guard
R = Cu/Cu with Louvered Hail Guard

Voltage
1 = 575/3/60
5 = 208/230/3/60
6 = 460/3/60

Design Rev
A = Initial Release

Base Unit Controls
0 = Electro-Mechanical Controls

Not Used
A = Place Holder

Service Options
0 = None
1 = Un-powered Convenience Outlet
2 = Powered Convenience Outlet

Electrical Options
A = None
C = Non-Fused Disconnect

Packaging
0 = Standard
1 = LTL

C150027

Fig. 1 - Model Number Nomenclature

POSITION NUMBER	1	2	3	4	5	6	7	8	9	10
TYPICAL	0	5	1	2	C	1	2	3	4	5

POSITION	DESIGNATES
1−2	Week of manufacture (fiscal calander)
3−4	Year of manufacture (”12” = 2012)
5	Manufacturing location
6−10	Sequence number

C12439

Fig. 2 - Serial Number Nomenclature

NOTES:

1. MINIMUM CLEARANCE (LOCAL CODES OR JURISDICTION MAY PREVAIL):
   A. BOTTOM TO COMBUSTIBLE SURFACES: 0 INCHES.
   B. OUTDOOR COIL, FOR PROPER AIR FLOW: 36 INCHES ONE SIDE, 12 INCHES THE OTHER. THE SIDE GETTING THE GREATER CLEARANCE IS OPTIONAL.
   C. OVERHEAD: 60 INCHES, TO ASSURE PROPER OUTDOOR FAN OPERATION.
   D. BETWEEN UNITS: CONTROL BOX SIDE, 42 INCHES PER NEC.
   E. BETWEEN UNIT AND UNGROUNDED SURFACES: CONTROL BOX SIDE, 36 INCHES PER NEC.
   F. BETWEEN UNIT AND BLOCK OR CONCRETE WALLS AND OTHER GROUNDED SURFACES: CONTROL BOX SIDE, 42 INCHES PER NEC.
2. WITH EXCEPTION OF THE CLEARANCE FOR THE OUTDOOR COIL AS STATED IN NOTE 1B, A REMOVABLE FENCE OR BARRICADE REQUIRES NO CLEARANCE.
3. UNITS MAY BE INSTALLED ON COMBUSTIBLE FLOORS MADE FROM WOOD OR CLASS A, B OR C ROOF COVERING MATERIAL.

CG — CENTER OF GRAVITY

DIRECTION OF AIR FLOW

DIMENSIONS IN [ ] ARE IN MILLIMETERS.

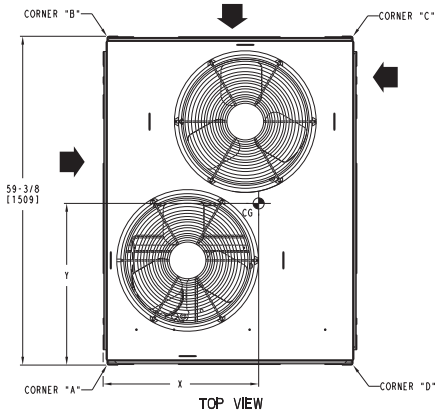

SERVICE VALVE CONNECTIONS			QTY
UNIT	SUCTION	LIQUID	
38AUZ07	1-1/8 [28.6]	3/8 [9.5]	1
38AUZ08	1-1/8 [28.6]	1/2 [12.7]	1
38AUZ12	1-3/8 [34.9]	1/2 [12.7]	1
38AUZ14	1-3/8 [34.9]	5/8 [15.9]	1
38AUD12	1-1/8 [28.6]	3/8 [9.5]	2
38AUD14	1-3/8 [34.9]	1/2 [12.7]	2

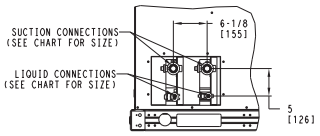

RIGHT SIDE VIEW
(FOR 38AUD SYSTEMS)

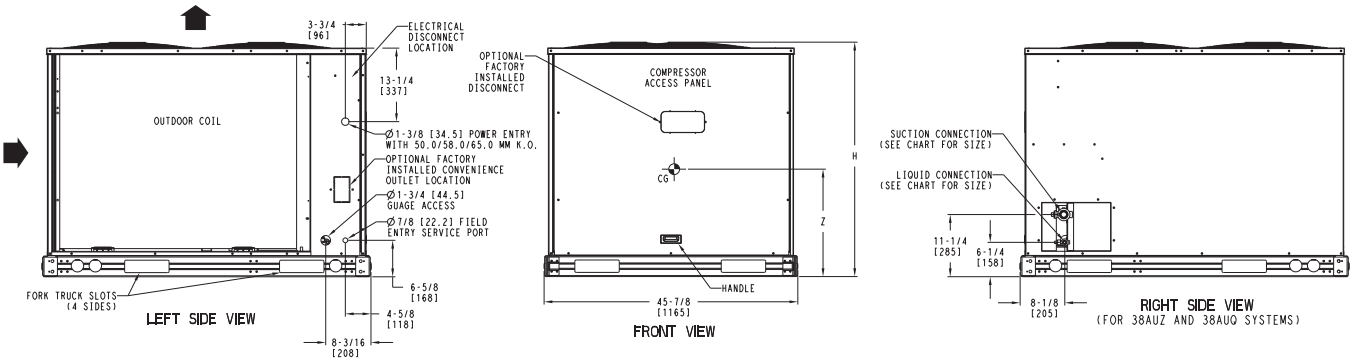

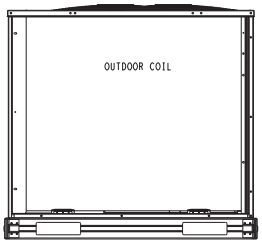

REAR VIEW

C11092

UNIT	STD. UNIT WT.		CORNER A		CORNER B		CORNER C		CORNER D		CENTER OF GRAVITY			UNIT HEIGHT
	lbs.	kg.	lbs.	kg.	lbs.	kg.	lbs.	kg.	lbs.	kg.	X	Y	Z	H
38AUZ*07 (RTPF)	389	176	141	64	96	44	62	28	91	41	18 [457.2]	24 [609.6]	21 [533.4]	42 3/8 [1076.0]
38AUZ*08 (RTPF)	391	177	142	64	96	44	62	28	91	41	18 [457.2]	24 [609.6]	21 [533.4]	42 3/8 [1076.0]
38AUZ*12 (RTPF)	490	222	177	80	120	54	78	35	114	52	18 [457.2]	24 [609.6]	24 [609.6]	50 3/8 [1279.2]
38AUZ*14 (RTPF)	598	271	195	88	142	64	110	50	151	68	20 [508.0]	25 [635.0]	24 [609.6]	50 3/8 [1279.2]
38AUD*12 (RTPF)	516	234	185	84	117	53	83	38	131	59	19 [482.6]	23 [584.2]	24 [609.6]	50 3/8 [1279.2]
38AUD*14 (RTPF)	654	297	214	97	155	70	120	54	165	75	20 [508.0]	25 [635.0]	24 [609.6]	50 3/8 [1279.2]

LEGEND: RTPF = Round Tube/Plate Fin coil

Fig. 3 - 38AU Unit Dimensions

Table 1A — Physical Data — 38AUZ*07-14 Units — 60 Hz English

UNIT SIZE 38AU	Z*07	Z*08	Z*12	Z*14
NOMINAL CAPACITY (tons)	6	7.5	10	12.5
OPERATING WEIGHTS (lb)				
Round Tube/Plate Fin Coil (Cu/Al)	389	391	490	598
REFRIGERANT TYPE‡	R-410A			
RTPF Operating Charge, Typical (lb)†	14.0	17.0	20.0	46.0
RTPF Shipping Charge (lb)	11.0	13.0	16.0	35.0
COMPRESSOR				
Qty...Type	1...Scroll	1...Scroll	1...Scroll	1...Scroll
Oil Charge (oz)	56	60	110	110
CONDENSER FANS				
Qty...Rpm	2...1100			
Motor Hp	$^1/_4$			
Diameter	22			
Nominal Airflow (Cfm Total)	6000			
Watts (Total)	610			
RTPF CONDENSER COIL				
Material (Tube/Fin)	Cu / Al			
Coil Type	$^3/_8$–in RTPF			
Rows/Fins per inch (FPI)	2 / 17			3 / 17
Face Area (sq ft total)	17.5	17.5	25.1	31.8
CONTROLS				
Pressurestat Settings (psig)				
High Cutout	630 ± 10			
Cut-in	505 ± 20			
Low Cutout	54 ± 3			
Cut-in	117 ± 5			
PIPING CONNECTIONS (in. ODS)				
Qty...Suction	1...1 $^1/_8$	1...1 $^1/_8$	1...1 $^3/_8$	1...1 $^3/_8$
Qty...Liquid	1...$^3/_8$	1...$^1/_2$	1...$^1/_2$	1...$^5/_8$

LEGEND
RTPF — Round Tube/Plate Fin
ODS — Outside Diameter Sweat (socket)

‡ Unit is factory-supplied with partial charge only.
† Typical operating charge with 25 ft of interconnecting piping.

38AU

Table 1B — Physical Data — 38AUZ*07-14 Units — 60 Hz SI

UNIT SIZE 38AU	Z*07	Z*08	Z*12	Z*14
NOMINAL CAPACITY (kW)	21.1	26.4	35.1	44
OPERATING WEIGHTS (lb)				
Round Tube/Plate Fin Coil (Cu/Al)	176	177	222	271
REFRIGERANT TYPE‡	R-410A			
RTPF Operating Charge, Typical (kg)†	6.4	7.7	9.1	20.9
RTPF Shipping Charge (kg)	5.0	5.9	7.3	15.9
COMPRESSOR				
Qty...Type	1...Scroll	1...Scroll	1...Scroll	1...Scroll
Oil Charge (oz)	1.7	1.8	3.3	3.3
CONDENSER FANS				
Qty...r/s	2...18			
Motor Hp NEMA	$^1/_4$			
Diameter (mm)	560			
Nominal Airflow (L/s)	2832			
Watts (Total)	610			
RTPF CONDENSER COIL				
Material (Tube/Fin)	Cu / Al			
Coil Type	$^3/_8$–in RTPF			
Rows/Fins per Meter (Fins/m)	2 / 670			3 / 670
Face Area (sq m total)	1.6	1.6	2.3	3.0
CONTROLS				
Pressurestat Settings (kPa)				
High Cutout	4347 ± 70			
Cut-in	3482 ± 138			
Low Cutout	372 ± 21			
Cut-in	807± 34			
PIPING CONNECTIONS (in. ODS)				
Qty...Suction	1...1 $^1/_8$	1...1 $^1/_8$	1...1 $^3/_8$	1...1 $^3/_8$
Qty...Liquid	1...$^3/_8$	1...$^1/_2$	1...$^1/_2$	1...$^5/_8$

LEGEND
RTPF — Round Tube/Plate Fin
NEMA — National Electrical Manufacturers Association
ODS — Outside Diameter Sweat (socket)

‡ Unit is factory-supplied with partial charge only.
† Typical operating charge with 25 ft of interconnecting piping.

38AU

Table 2A — Physical Data — 38AUD*12-14 Units — 60 Hz English

UNIT SIZE 38AU	D*12	D*14
NOMINAL CAPACITY (tons)	10	12.5
OPERATING WEIGHTS (lb)		
Round Tube/Plate Fin Coil (Cu/Al)	516	654
REFRIGERANT TYPE‡	R-410A	
RTPF Operating Charge 1/2, Typical (lb)†	11.0 / 11.0	23.0/23.0
RTPF Shipping Charge 1/2 (lb)	8.0 / 8.0	17.0/17.0
COMPRESSOR		
Qty...Type	2...Scroll	2...Scroll
Oil Charge 1/2 (oz)	42	60
CONDENSER FANS		
Qty...Rpm	2...1100	
Motor Hp	$^1/_4$	
Diameter	22	
Nominal Airflow (Cfm Total)	6000	
Watts (Total)	610	
RTPF CONDENSER COIL		
Material (Tube/Fin)	Cu / Al	
Coil Type	$^3/_8$–in RTPF	
Rows/Fins per inch (FPI)	2 / 17	3 / 17
Face Area (sq ft total)	25.1	31.8
CONTROLS		
Pressurestat Settings (psig)		
High Cutout	630 ± 10	
Cut-in	505 ± 20	
Low Cutout	54 ± 3	
Cut-in	117 ± 5	
PIPING CONNECTIONS (in. ODS)		
Qty...Suction 1/2	1...1 $^1/_8$ / 1...1 $^1/_8$	1...1 $^3/_8$ / 1...1 $^3/_8$
Qty...Liquid 1/2	1...$^3/_8$ / 1...$^3/_8$	1...$^1/_2$ / 1...$^1/_2$

LEGEND
RTPF — Round Tube/Plate Fin
ODS — Outside Diameter Sweat (socket)

‡ Unit is factory-supplied with partial charge only.
† Typical operating charge with 25 ft of interconnecting piping.

38AU

Table 2B — Physical Data — 38AUD*12-14 Units — 60 Hz SI

UNIT SIZE 38AU	D*12	D*14
NOMINAL CAPACITY (kW)	35.1	44
OPERATING WEIGHTS (kg)		
Round Tube/Plate Fin Coil (Cu/Al)	234	297
REFRIGERANT TYPE‡	R-410A	
RTPF Operating Operating 1/2 (kg)	5.0 / 5.0	10.4 / 10.4
RTPF Shipping Charge 1/2 (kg)	3.6 / 3.6	7.7 / 7.7
COMPRESSOR		
Qty...Type	2...Scroll	2...Scroll
Oil Charge 1/2 (L)	1.2	1.7
CONDENSER FANS		
Qty...r/s	2...1100	
Motor Hp NEMA	$^1/_4$	
Diameter (mm)	560	
Nominal Airflow (Cfm Total)	6000	
Watts (Total)	610	
RTPF CONDENSER COIL		
Material (Tube/Fin)	Cu / Al	
Coil Type	$^3/_8$–in RTPF	
Rows/Fins per Meter (Fins/m)	2 / 670	3 / 670
Face Area (sq m total)	2.3	3.0
CONTROLS		
Pressurestat Settings (kPa)		
High Cutout	4347 ± 70	
Cut-in	3482 ± 138	
Low Cutout	372 ± 21	
Cut-in	807 ± 34	
PIPING CONNECTIONS (in. ODS)		
Qty...Suction 1/2	1...1 $^1/_8$ / 1...1 $^1/_8$	1...1 $^3/_8$ / 1...1 $^3/_8$
Qty...Liquid 1/2	1...$^3/_8$ / 1...$^3/_8$	1...$^1/_2$ / 1...$^1/_2$

LEGEND
RTPF — Round Tube/Plate Fin
NEMA — National Electrical Manufacturers Association
ODS — Outside Diameter Sweat (socket)

‡ Unit is factory-supplied with partial charge only.
† Typical operating charge with 7.62 m of interconnecting piping.

38AU

Matching 38AU Model to Evaporator Coil

The Model 38AUZ is a single-circuit unit design, requiring one set of refrigeration piping. This model can be connected to an evaporator coil with one circuit or with two circuits (by manifolding the evaporator connections into a single piping system).

The Model 38AUD is a dual-circuit unit design that requires two sets of refrigeration piping between the outdoor unit and the evaporator coil (or coils). This model can only be connected to an evaporator coil that has two refrigeration circuits (or to two separate evaporator coils). The Model 38AUD CANNOT be connected to a single-circuit evaporator coil. The Model 38AUD CANNOT be field-converted to a single-circuit design.

38AU

Table 3 – Evaporator Coil Connections

Evaporator Coil has	Connect to Model	Notes
Single Circuit	38AUZ ONLY	
Two Circuits	38AUZ Or 38AUD	Manifold evaporator circuits into single piping system Use two separate piping systems

Before unpacking this new 38AU model, compare the evaporator coil design to the 38AU model.

INSTALLATION

Jobsite Survey

Complete the following checks before installation.

1. Consult local building codes and the NEC (National Electrical Code) ANSI/NFPA 70 for special installation requirements.
2. Determine unit location (from project plans) or select unit location.
3. Check for possible overhead obstructions which may interfere with unit lifting or rigging.

Step 1 — Plan for Unit Location

The 38AU units are designed and approved for outdoor installation only. Do not locate these units indoors. Do not add ducting to unit fan system.

Select a location for the unit and its support system (pad, rails or other) that provides for the minimum clearances required for safety. This includes the clearance to combustible surfaces, unit performance and service access below, around and above unit as specified in unit drawings. See Fig. 4.

NOTE: Local codes may require different clearances than specified in Fig. 4. It is the responsibility of installers to be knowledgeable in local codes and to modify the recommended clearances to satisfy local codes.

NOTE: Consider also the effect of adjacent units on airflow performance and control box safety clearance.

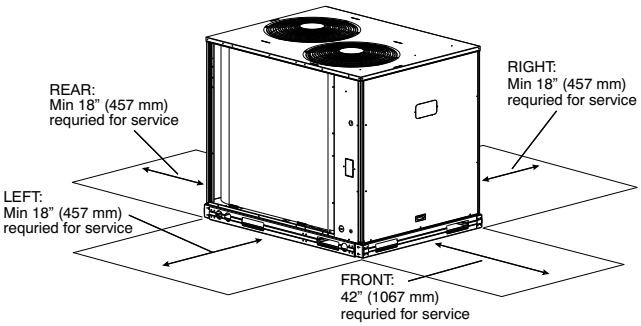

Note: Observe requirements for 39" (914 mm) operating clearance on either Left or Rear coil opening.

C110201

Fig. 4 - Service Clearance Dimensional Drawing

Do not install the outdoor unit in an area where fresh air supply to the outdoor coil may be restricted or when recirculation from the condenser fan discharge is possible. Do not locate the unit in a well or next to high walls.

Evaluate the path and required line length for interconnecting refrigeration piping, including suction riser requirements (outdoor unit above indoor unit), liquid line lift (outdoor unit below indoor unit) and hot gas bypass line. Relocate sections to minimize the length of interconnecting tubing.

DO NOT BURY REFRIGERATION LINES.

Although unit is weatherproof, avoid locations that permit water from higher level runoff and overhangs to fall onto the unit.

Step 2 — Complete Pre-Installation Checks

Check Unit Electrical Characteristics: Confirm before installation of unit that voltage, amperage and circuit protection requirements listed on unit data plate agree with power supply provided.

Un-crate Unit: Remove unit packaging except for the top skid assembly, which should be left in place until after the unit is rigged into its final location.

Inspect Shipment: File a claim with shipping company if the shipment is damaged or incomplete.

Consider System Requirements:

- Consult local building codes and National Electrical Code (NEC, U.S.A.) for special installation requirements.
- Allow sufficient space for airflow clearance, wiring, refrigerant piping, and servicing unit. See Fig. 3 for unit dimensions and weight distribution data.
- Locate the unit so that the outdoor coil (condenser) airflow is unrestricted on all sides and above.
- The unit may be mounted on a level pad directly on the base channels or mounted on raised pads at support points. See Tables 1A through 2B for unit operating weights. See Fig. 3 for weight distribution based on recommended support points.

NOTE: If vibration isolators are required for a particular installation, use the data in Fig. 3 to make the proper selection.

Step 3 — Prepare Unit Mounting Support

Slab Mount —

Provide a level concrete slab that extends a minimum of 6 in. (150 mm) beyond unit cabinet. Install a gravel apron in front of condenser coil air inlet to prevent grass and foliage from obstructing airflow.

Step 4 — Rig and Mount the Unit

⚠ CAUTION

UNIT DAMAGE HAZARD

Failure to follow this caution may result in equipment damage.

All panels must be in place when rigging. Unit is not designed for handling by fork truck.

Rigging: These units are designed for overhead rigging. Refer to the rigging label for preferred rigging method. Spreader bars are not required if top crating is left on the unit. All panels must be in place when rigging. As further protection for coil faces, plywood sheets may be placed against the sides of the unit, behind cables. Run cables to a central suspension point so that the angle from the horizontal is not less than 45 degrees. Raise and set the unit down carefully.

If it is necessary to roll the unit into position, mount the unit on longitudinal rails, using a minimum of 3 rollers. Apply force to the rails, not the unit. If the unit is to be skidded into position, place it on a large pad and drag it by the pad. Do not apply any force to the unit.

Raise from above to lift the unit from the rails or pad when unit is in its final position.

After the unit is in position, remove all shipping materials and top crating.

Step 5 — Determine Refrigerant Line Sizes

Select the recommended line sizes for 38AUZ and 38AUD unit from the appropriate tables.

Determine the linear length of interconnecting piping required between the outdoor unit and indoor unit (evaporator). Consider and identify also the arrangement of the tubing path (quantity and type of elbows in both lines), liquid line solenoid size, filter drier and any other refrigeration specialties located in the liquid line. Refer to the indoor unit installation instructions for additional details on refrigeration specialties devices.

Determine equivalent line length adjustments for path and components and add to linear line lengths. See Table 4, Equivalent Lengths for Common Fittings, for usual fitting types. Also identify adjustments for refrigeration specialties. Refer to Part 3 of the Carrier System Design Manual for additional data and information on equivalent lengths.

Table 4 – Equivalent Lengths for Common Fittings (ft)

Nominal Tube OD	Elbows				
	90° Std	90° Lrad	90° Street	45° Std	45° Street
3/8	1.3	0.8	2.2	0.6	1
1/2	1.4	0.9	2.3	0.7	1.1
5/8	1.6	1	2.5	0.8	1.3
3/4	1.8	1.2	2.9	0.9	1.5
7/8	2	1.4	3.2	0.9	1.6
1 1/8	2.6	1.7	4.1	1.3	2.1
1 3/8	3.3	2.3	5.6	1.7	3
1 5/8	4	2.6	6.3	2.1	3.4
2 1/8	5	3.3	8.2	2.6	4.5

Nominal Tube OD	Tees			
	Branch Flow	Straight-Thru		
		No Reduct	Reduce 25%	Reduce 50%
3/8	2.6	0.8	1.1	1.3
1/2	2.7	0.9	1.2	1.4
5/8	3	1	1.4	1.6
3/4	3.5	1.2	1.7	1.8
7/8	4	1.4	1.9	2
1 1/8	5	1.7	2.3	2.6
1 3/8	7	2.3	3.1	3.3
1 5/8	8	2.6	3.7	4
2 1/8	10	3.3	4.7	5

NOTE: Equivalent line lengths will vary based on tube diameter. Calculate equivalent line length for each pipe by adding equivalent length adjustments to linear lengths for each pipe.

Enter the appropriate table to select the recommended line sizes.

Model/ Position #6	Table	Quantity of Line Sets
38AUZ / all	5	1
38AUD / A,B	6	2
38AUD / C	7	2

Liquid Lift —

A liquid lift condition exists when the outdoor unit is located below the indoor (evaporator) unit and liquid flows vertically up in a portion of the liquid line. The vertical column of liquid reduces the available state point subcooling at the evaporator coil's thermal expansion valve. This effect reduces the length of liquid lift (feet of elevation) that a liquid line size can accommodate. Longer linear tube lengths will also reduce the amount of liquid lift possible.

Check Tables 5 (38AUZ), 6 (38AUD) and 7 (38AUDC12) for maximum liquid lift capabilities for line sizes. Reselect the liquid line tube size if necessary. If maximum available tube size cannot provide the required lift distance on this installation, relocate the outdoor unit to reduce the equivalent line length or the lift requirement.

Table 5 – 38AUZA/B 07-14 Piping Recommendations (Single-Circuit Unit)

R–410A						
Linear Length	Ft	0–25	25–50	50–75	75–100	100–125
	m	0–8	8–15	15–23	23–30	30–38
Equivalent Length	Ft	0–38	38–75	75–113	113–150	150–188
	m	0–12	12–23	23–34	34–46	46–57
Model						
38AUZA/B07	Liquid Line	3/8	3/8 or 1/2	1/2	1/2 or 5/8	1/2 or 5/8
	Max Lift (ft)					
	RTPF	25	50 or 50	75	100 or 100	125 or 125
	Suction Line	7/8 or 1-1/8	7/8 or 1-1/8	1-1/8	1-1/8	1-1/8
	Suction PD (°F)	1.0 or 0.3	2.1 or 0.6	0.9	1.2	1.5
	Charge (lbs)					
	RTPF	14.0	15.2 or 16.7	18.6	20.6 or 24.4	22.5 or 28.2
38AUZA/B08	Liquid Line	1/2	1/2	1/2	1/2	1/2
	Max Lift (ft)					
	RTPF	25	50	75	100	93
	Suction Line	7/8 or 1-1/8	1-1/8	1-1/8	1-1/8	1-1/8
	Suction PD (°F)	1.8 or 0.5	1.0	1.4	1.9	2.4
	Charge (lbs)					
	RTPF	18.6	19.7	21.7	23.8	25.5
38AUZA/B12	Liquid Line	1/2	1/2	1/2 or 5/8	1/2 or 5/8	1/2 or 5/8
	Max Lift (ft)					
	RTPF	25	50	57 or 75	61 or 100	47 or 99
	Suction Line	1-1/8	1-1/8	1-1/8	1-1/8 or 1-3/8	1-1/8 or 1-3/8
	Suction PD (°F) (Cap Red)	0.7	1.4	2.1	2.8 or 1.0 (-1.4%)	3.5 or 1.2 (-2.6%)
	Charge (lbs)					
	RTPF	19.8	21.8	23.5 or 26.2	26.2 or 29.9	DNU or 33.0
38AUZA/B14	Liquid Line	1/2	1/2 or 5/8	1/2 or 5/8	1/2 or 3/4	1/2 or 3/4
	Max Lift (ft)					
	RTPF	25	50 or NR	75 or NR	100 or NR	125 or NR
	Suction Line	1-1/8	1-1/8	1-3/8	1-3/8	1-3/8
	Suction PD (°F)	1.2	2.4	1.3	1.7	2.2
	Charge (lbs)					
	RTPF	46.0	47.9 or NR	50.4 or NR	56.3 or NR	59.3 or NR

Legend:	
Linear Length	Linear tubing length, feet
Equivalent Length	Equivalent tubing length, including effects of refrigeration specialties devices
Liquid Line	Tubing size, inches OD.
Max Lift	Maximum liquid lift (indoor unit ABOVE outdoor unit only), at maximum permitted liquid line pressure drop • Linear Length Less than 75 ft (23 m): Minimum 2.0° F subcooling entering TXV • Linear Length Greater than 75 ft (23m): Minimum 0.5° F subcooling entering TXV
Suction Line	Tube size, inches OD
Suction PD (°F)	Suction Line Pressure Drop, saturated temperature, °F
(Cap Red)	Capacity Reduction caused by suction line PD greater than 2°F
Charge	Charge Quantity, lbs. Calculated for both liquid line sizes (where applicable), but only with larger suction line size (where applicable)
DNU	Do Not Use (pressure drop exceeds available subcooling in this model)
NR	Not Recommended (use smaller liquid tube size)
NOTE:	For applications with equivalent length greater than 188 ft (57 m) and/or linear length greater than 125 ft (38 m), contact your local Carrier representative.

Table 6 – 38AUDA/B 12-14 Piping Recommendations (Two-Circuit Unit)

NOTE: 38AUDA/B requires TWO sets of refrigeration piping						
R–410A						
Linear Length	Ft	0–25	25–50	50–75	75–100	100–125
	m	0–8	8–15	15–23	23–30	30–38
Equivalent Length	Ft	0–38	38–75	75–113	113–150	150–188
	m	0–12	12–23	23–34	34–46	46–57
Model						
38AUDA/B12	Liquid Line	$^{3}/_{8}$	$^{3}/_{8}$	$^{3}/_{8}$ or $^{1}/_{2}$	$^{3}/_{8}$ or $^{1}/_{2}$	$^{3}/_{8}$ or $^{1}/_{2}$
	Max Lift (ft)					
	RTPF	25	50	75 or NR	83 or 100	62 or 125
	Suction Line	$^{7}/_{8}$	$^{7}/_{8}$	1-$^{1}/_{8}$	1-$^{1}/_{8}$	1-$^{1}/_{8}$
	Suction PD (°F)	1.1	2.1	0.9	1.2	1.5
	Charge (lbs) (ea circuit)					
	RTPF	13.3	14.3	15.8 or NR	16.9 or 20.0	18.1 or 22.0
38AUDA/B14	Liquid Line	$^{3}/_{8}$	$^{3}/_{8}$	$^{3}/_{8}$ or $^{1}/_{2}$	$^{3}/_{8}$ or $^{1}/_{2}$	$^{3}/_{8}$ or $^{1}/_{2}$
	Max Lift (ft)					
	RTPF	25	50	75 or NR	54 or 100	45 or 125
	Suction Line	$^{7}/_{8}$	$^{7}/_{8}$	1-$^{1}/_{8}$	1-$^{1}/_{8}$	1-/$_{8}$
	Suction PD (°F)	1.1	2.2	1.0	1.3	1.6
	Charge (lbs) (ea circuit)					
	RTPF	23.0	24.0	27.8 or NR	26.6 or 29.7	27.8 or 31.7
Legend:						
Linear Length	Linear tubing length, feet					
Equivalent Length	Equivalent tubing length, including effects of refrigeration specialties devices					
Liquid Line	Tubing size, inches OD.					
Max Lift	Maximum liquid lift (indoor unit ABOVE outdoor unit only), at maximum permitted liquid line pressure drop • Linear Length Less than 75 ft (23 m): Minimum 2.0° F subcooling entering TXV • Linear Length Greater than 75 ft (23m): Minimum 0.5° F subcooling entering TXV					
Suction Line	Tube size, inches OD					
Suction PD (°F)	Suction Line Pressure Drop, saturated temperature, °F					
(Cap Red)	Capacity Reduction caused by suction line PD greater than 2°F					
Charge	Charge Quantity, lbs. Calculated for both liquid line sizes (where applicable), but only with larger suction line size (where applicable)					
DNU	Do Not Use (pressure drop exceeds available subcooling in this model)					
NR	Not Recommended (use smaller liquid tube size)					
NOTE:	For applications with equivalent length greater than 188 ft (57 m) and/or linear length greater than 125 ft (38 m), contact your local Carrier representative.					

Table 7 – 38AUDC12 HGBP Piping Recommendations (Two-Circuit Unit)

NOTE: 38AUDC units require TWO sets of refrigeration piping								
R-410A								
Linear Length	Ft	0-25	25-50	50-75	75-100		100-125	
	m	0-8	8-15	15-23	23-30		30-38	
Equivalent Length	Ft	0-38	38-75	75-113	113-150		150-188	
	m	0-12	12-23	23-34	34-46		46-57	
Model								
38AUDC12	Liquid Line	3/8	3/8	3/8	3/8	1/2	3/8	1/2
	Pressure Drop	1.8	3.5	5.2	8.7	1.2	8.7	1.5
	Max Lift	25	50	75	65	100	62	125
	Pressure Drop	3.8	7.5	11.3	12.2	9.4	13.7	11.7
	Suction Line							
	Circuit 1:	VAPOR RISER REQUIRED, NOT GREATER THAN 20 FT (6.1 M) – See Fig. 5)						
	Tube S	5/8	1-1/8	1-3/8	1-3/8		1-3/8	
	Tube A	5/8	5/8	5/8	5/8		5/8	
	Pressure Drop	2.0	2.0	1.9	2.0		2.0	
	Circuit 1:	VAPOR RISER GREATER THAN 20 FT (6.1 M) – See Fig. 6)						
	Tube S	5/8	7/8	7/8	1-1/8		1-1/8	
	Tube A	5/8	5/8	5/8	5/8		5/8	
	Tube B	NR	1/2	5/8	5/8		5/8	
	Pressure Drop	2.0	1.6	1.7	1.7		2.1	
	Circuit 1:	NO VAPOR RISER REQUIRED						
		7/8	7/8	1-1/8	1-1/8		1-1/8	
	Circuit 2:	7/8	7/8	1-1/8	1-1/8		1-1/8	
	Pressure Drop	1.1	2.1	0.9	1.2		1.5	
	Charge (lbs) 1/2	13.3	14.3	15.8	16.9	20.0	18.1	22.0

Legend:	
Equivalent Length	Equivalent tubing length, including effects of refrigeration specialties devices
Linear Length	Typical linear tubing length (50% added to linear to define Equivalent Length for this table)
Liquid Line	Tubing size, inches OD.
Max Lift	Maximum liquid lift (indoor unit ABOVE outdoor unit only), at maximum permitted liquid line pressure drop — • Linear Length Less than 75 ft (23 m): Minimum 2.0° F subcooling entering TXV • Linear Length Greater than 75 ft (23m): Minimum 0.5° F subcooling entering TXV
Suction Line	Tube size, inches OD
Charge	Charge Quantity, lbs. Calculated for both liquid line sizes (where applicable), but only with larger suction line size (where applicable)
NOTE:	For applications with equivalent length greater than 188 ft (57 m) and/or linear length greater than 125 ft (38 m), contact your local Carrier representative.

Suction Riser —

A suction riser condition exists when the outdoor unit is located above the indoor (evaporator) unit and suction vapor must flow vertically up to return to the compressor. Oil return is a concern when the suction tube size is too large to produce the minimum refrigerant velocity to ensure oil return at minimum load conditions.

38AUZ (All) and 38AUD (A,B) WITHOUT HGBP
Check Table 8 for maximum suction tube size for 38AU units at minimum load conditions. Consider suction speed riser (reduced tube size for vertical segment only) or double suction riser arrangement if the planned suction tube size does not provide necessary minimum flowrates for this riser.

Table 8 – 38AU Maximum Suction Pipe Size

Model:	Unit Size	Maximum Tube Size
38AUZA,B	07	1 3/8
	08	1 5/8
	12	1 5/8
	14	2 1/8
38AUDA,B	12	1 3/8
	14	1 5/8
38AUDC	12	See Table 7

38AUDC12 WITH OPTIONAL HOT GAS BYPASS
Special consideration for suction riser requirements must be considered when applying this factory-installed hot gas bypass. It is extremely important to consider the lowest possible refrigerant tons of refrigerant flow when hot gas bypass is functioning to assure proper oil return up suction risers.

Table 7 provides recommended tube sizes for model 38AUDC12 unit which includes the factory-installed hot gas bypass system on Circuit 1. The selections in this table are based on evaluations of system minimum load operating conditions for comfort cooling applications, with compressor saturated suction pressure to 28°F (-2.2°C) minimum.

Table 7 includes liquid line size selections based on use of RTPF coil option only.

Table 7 includes three different suction line size selections for Circuit 1 based on the elevation difference conditions between the 38AUD unit and the evaporator coil location.

Outdoor unit ABOVE evaporator coil: This installation will have at least one suction riser segment. If the vertical elevation difference is less than 20-ft (6.1 m) linear feet and requires only one or two segments, consider a speed riser selection for Circuit 1; use the line marked VAPOR RISER REQUIRED; NOT GREATER THAN 20 FT (6.1 M). See Fig. 5. Tube S is the horizontal line size; tube A is the reduced diameter riser size.

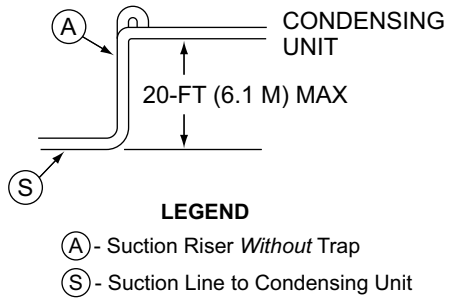

Fig. 5 - Suction Line Piping - Speed Riser

If the vertical elevation difference is greater than 20-ft (6.1-m) linear feet or requires more than two short lift segments, select the Circuit 1 suction line size from Double Suction Riser lines data under VAPOR RISER GREATER THAN 20 FT (6.1 M). See Fig. 6. Tube S is the horizontal line size. Tube A is the reduced diameter riser size without bottom trap; Tube B is the parallel riser size with bottom oil trap.

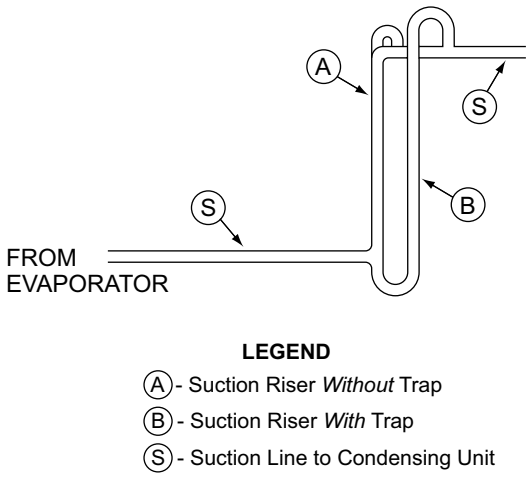

Fig. 6 - Suction Line Piping - Double Riser

Outdoor unit BELOW evaporator coil and no vertical riser segments: Select Circuit 1 suction line size from NO VAPOR RISER line.

Circuit 2 suction line: Because there is no hot gas bypass system in Circuit 2, no special riser selections are necessary. Select Circuit 2 suction line from bottom line for all 38AUDC installations.

Vertical Separation (outdoor unit above indoor unit) –

Vertical elevation difference of 200 ft (60 m) is permitted when the outdoor unit (38AUZ or 38AUD) is located above the indoor unit.

Step 6 — Complete Refrigerant Piping Connections

IMPORTANT: Do not bury refrigerant piping underground.

IMPORTANT: A refrigerant receiver is not provided with the unit. Do not install a receiver.

Provide Safety Relief —

If local codes dictate an additional safety relief device, purchase locally and install locally. Installation will require the recovery of the factory shipping charge before the factory tubing can be cut and the supplemental relief device is installed.

Model 38AUD has two separate refrigeration systems. If required, each circuit will require a field-supplied/installed supplemental relief device.

Check 38AU Model with Evaporator Coil Connections —

Confirm before installation of unit that the evaporator coil connections are consistent with this 38AU model. See Table 3 on page 10.

Insulate Suction Lines —

Apply closed-cell tubular insulation to all suction lines between evaporator coil connection and 38AU unit's suction service valve.

38AUD Piping Connections —

The 38AUD's two circuits are designated Circuit 1 and Circuit 2. Circuit 1 is controlled by the thermostat's Y1 (or TC1) contact and will be the first circuit on and last circuit off. Circuit 2 is controlled by the thermostat's Y2 (or TC2) contact and this circuit is always the "lag" circuit.

See Fig. 7 for location of Circuit 1 and Circuit 2 service valves and field piping connections. Circuit 1 is on the right-hand side of the service valve compartment; Circuit 2 is on the left.

When a single piece evaporator coil with two separate circuits is connected to a 38AUD, the lower coil circuit should be connected to the 38AUD's Circuit 1 so that the evaporator's lower coil segment is first-on/last-off (to avoid re-evaporation of condensate on dry lower coil segments).

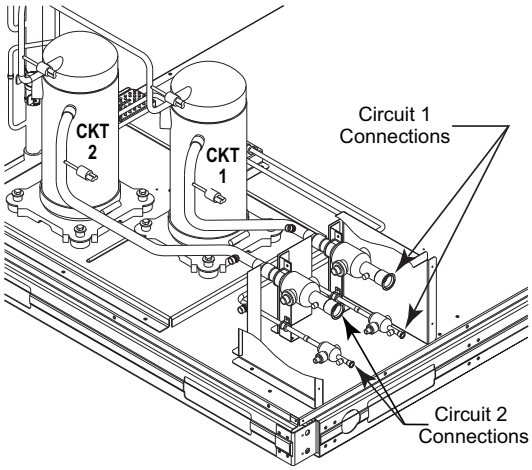

Fig. 7 - 38AUD Service Valve Locations

Plan the Circuit 1 and Circuit 2 tubing segments carefully, mark each segment and check constantly as piping systems are assembled to avoid piping errors.

38AUD unit cannot be field-piped as a single-circuit/tandem system.

Final Tubing Check. 38AUD —

Before completing the field piping connections to the 38AUD unit service valves, confirm that the suction line to the indoor coil's first-on/last-off circuit (and its companion liquid line) are correctly identified as Circuit 1 use for the 38AUD unit. If a suction riser is required, it must be in Circuit 1.

Connecting 40RU to 38AUD: The 40RU fan coil in sizes 12, 14 and 16 is a face-split coil design that also has its circuits designated as 1 and 2. See Fig. 8. Note that the lower coil segment changes as the arrangement of the 40RU changes. In a vertical arrangement, the 40RU's lower coil segment is segment 2; this segment should be connected to the 38AUD's Circuit 1. In a horizontal arrangement, the 40RU's lower segment is now segment 1; this segment should be connected to the 38AUD's Circuit 1.

Note that refrigerant suction piping should be insulated.

40RU Arrangement	Cooling Stage	40RU Coil Segment	Connect to 38AUD
Vertical	Y1 Y2	2 1	Circuit 1 Circuit 2
Horizontal	Y1 Y2	1 2	Circuit 1 Circuit 2

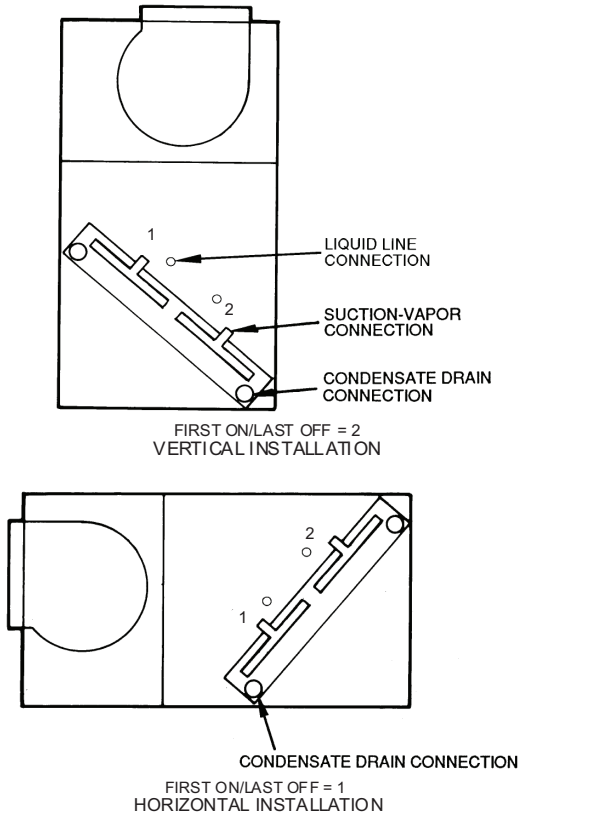

Fig. 8 - Typical Evaporator Coil Connections (40RU)

Install Filter Drier(s) and Moisture Indicator(s) —

Every unit MUST have a filter drier in the liquid line. 38AUD models require two filter driers (one in each liquid line). Locate the filter drier(s) at the indoor unit, close to the evaporator coil's thermal expansion valve (TXV) inlets.

38AU units include one (38AUZ) or two (38AUD) Puron-duty filter drier(s), shipped in cartons attached to the unit basepan. Remove the filter drier(s) and prepare to install in the liquid line(s) at the evaporator coil. Do not remove connection fitting plugs until ready to connect and braze the filter drier into the liquid line position.

Table 9 – Puron-duty Filter Drier(s)

Model-Size	Qty	Liquid Line OD	Desiccant Volume	Part Number Ref
38AUZ*07	1	3/8-in	8 cu. in.	KH43LG091
38AUZ*08	1	1/2-in	16 cu. in.	KH43LG085
38AUZ*12	1	1/2-in	16 cu. in.	KH43LG085
38AUZ*14	1	5/8-in	16 cu. in.	KH43LG086
38AUD*12	2	3/8-in	8 cu. in.	KH43LG091
38AUD*14	2	1/2-in	16 cu. in.	KH43LG085

Installation of liquid line moisture indicating sightglass in each circuit is recommended. Locate the sightglass(es) between the outlet of the filter drier and the TXV inlet.

Refer to Table 10 for recommendations on refrigeration specialties.

In some applications, depending on space and convenience requirements, it may be desirable to install 2 filter driers and sight glasses in a single circuit application. One filter drier and sight glass may be installed at A locations (see Fig. 9) or 2 filter driers and sight glasses may be installed at B locations (see Figs. 9 and 10).

Select the filter drier for maximum unit capacity and minimum pressure drop. Complete the refrigerant piping from the indoor unit to the outdoor unit before opening the liquid and suction lines at the outdoor unit.

Install Liquid Line Solenoid Valve —

It is recommended that a solenoid valve be placed in the main liquid line (see Figs. 9 and 10) between the condensing unit and the evaporator coil. Locate the solenoid valve at the outlet end of the liquid line, near the evaporator coil connections, with flow direction arrow pointed at the evaporator coil. Refer to Table 10. (A liquid line solenoid valve is required when the liquid line length exceeds 75 ft [23 m].) This valve prevents refrigerant migration (which causes oil dilution) to the compressor during the off cycle, at low outdoor ambient temperatures. Wire the solenoid in parallel with the compressor contactor coil (see Figs. 9 and 10). This means of electrical control is referred to as solenoid *drop* control.

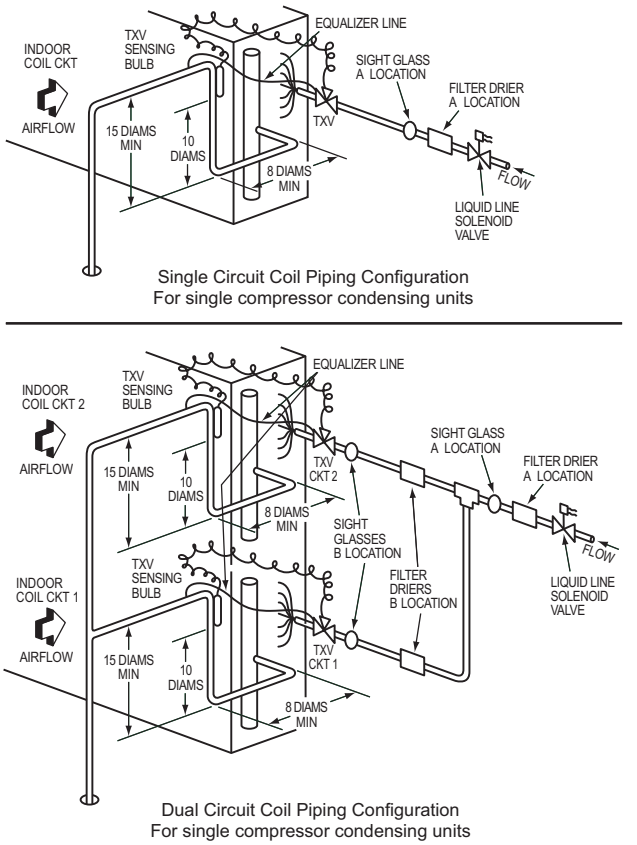

Fig. 9 - Location of Sight Glass(es) and Filter Driers Typical 38AUZ Systems

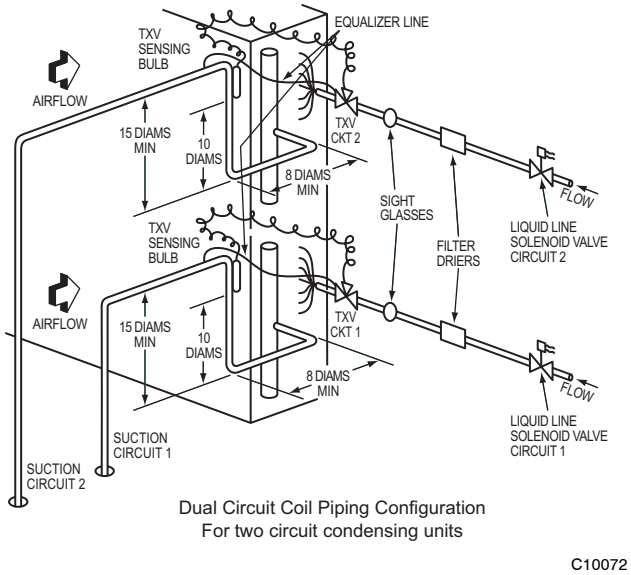

Fig. 10 - Location of Sight Glasses and Filter Driers Typical 38AUD Systems

Table 10 – Refrigerant Specialties Part Numbers

LIQUID LINE SIZE (in.)	LIQUID LINE SOLENOID VALVE (LLSV)	LLSV COIL	SIGHT GLASS	FILTER DRIER
3/8	EF680033	EF680037	KM680008	provided with unit see Table 9
1/2	EF680035	EF680037	KM680004	
5/8	EF680028	EF680032	KM680005	

38AUD units require TWO sets of parts.

Solenoid drop control wiring: Control the power to the liquid line solenoid through a Solenoid Valve Relay (SVR) in all units. Use part number HN61PC005 (field-supplied, installed). 38AUZ unit requires one SVR; 38AUD unit requires two relays.

A unit with two liquid line solenoid valves also requires a separate control power transformer for the liquid solenoid valve loads. Select TRAN3 transformer part number according to unit power supply.

Model	Qty LSV	Relay SVR Qty–Part Nbr	TRAN3 Primary V:Part Nbr
38AUZ	1	1 – HN61PC005	N/R
	2	2 – HN61PC005	208/230V: HT01BD202 460V: HT01BD702 575V: HT01BD902
38AUDA,B	2	2 – HN61PC005	
38AUDC	2	1 – HN61PC005*	N/R #

LSV: Liquid Solenoid Valve
SVR: Solenoid Valve Relay
N/R: Not Required
N/R #: Not Required / Factory Installed
*: Install as SVR–2 (SVR–1 is factory–installed)

Mount the SVR (and transformer TRAN3 when used) in unit control box. Connect per wiring schematic label on unit or per Fig. 28 (38AUZ) or Fig. 29 (38AUD).

NOTE: TRAN3 is provided with the HGBP factory installed option for 38AUDC12 units.

Evaporator Capacity Control Liquid Line Solenoid Valve: Many older unit designs included automatic capacity controls that sensed changes in suction pressure and could increase or decrease compressor capacity automatically as the evaporator load changed. Control systems were used on these units that had the thermostat's second stage contacts control a capacity control liquid line solenoid valve to open or shutoff a portion of the evaporator surface without any direct connection to the compressor circuit.

This form of system capacity staging control is not possible with 38AU models. If this installation is a retrofit for a unit that included automatic pressure-operated unloading, check the existing thermostat and liquid solenoid valve. When found, convert the evaporator second stage solenoid control into a drop-solenoid control. Use the two SVR relays and transformer as required on 38AUD models (above); wire the SVRs and transformer per two solenoid valve systems as shown in Figs. 18 and 29.

Selecting an Accumulator –

Because all 38AU models use scroll compressors, an accumulator is not required. If an accumulator is to be added, check the accumulator manufacturer's literature carefully for indication of its suitability for use with R-410A; look for minimum working pressure of 200 psig (1380 kPa). Select the accumulator first on the basis of its cataloged minimum capacity (tons) to ensure oil return from the accumulator, then on tube size or holding capacity.

Make Piping Connections —

Piping connections at the 38AU unit are ball valves with stub tube extensions. Do not open the unit service valves until all interconnecting tube brazing has been completed.

The stub tube connections include $^1/_4$-in SAE service fittings with Schrader valve cores (see Fig. 11). Before making any brazed connections to the unit service valves, remove both Schrader valve caps and cores and save for re-installation. Connect a source for nitrogen to one of these service fittings during tube brazing to prevent the formation of copper oxides inside the tubes at brazed joints.

When connecting the field tubing to the 38AU service valves, wrap the valves in wet rags to prevent overheating.

Pressure-test all joints from outdoor unit connections over to the evaporator coil, using nitrogen as pressure and with soap-and-bubbles.

When pressure-testing is completed, remove the nitrogen source at the outdoor unit service valves and re-install the two Schrader valve cores. Torque the cores to 2-3 in-lbs (23-34 N-cm).

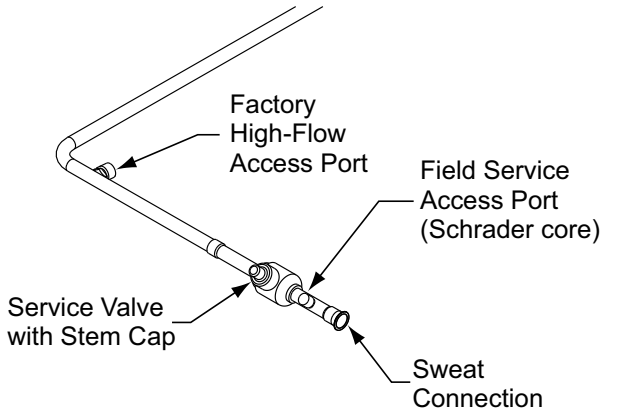

Fig. 11 - Typical Piping Connection Assembly

Evacuation/Dehydration —

Evacuate and dehydrate the connected refrigeration system(s) (excluding the 38AU unit) to 500 microns using a two-stage vacuum pump attached to the service ports outside the 38AU service valves, following description in GTAC II, Module 4, System Dehydration.

⚠ WARNING

UNIT OPERATION AND SAFETY HAZARD

Failure to follow this warning could cause personal injury, death and/or equipment damage.

Puron® (R-410A) refrigerant systems operate at higher pressure than standard R-22 systems. Do not use R-22 service equipment or components on Puron refrigerant equipment.

This unit is designed for use with Puron (R-410A) refrigerant. Do not use any other refrigerant in this system.

Puron (R-410A) refrigerant is provided in pink (rose) colored cylinders. These cylinders are available with and without dip tubes; cylinders with dip tubes will have a label indicating this feature. For a cylinder with a dip tube, place the cylinder in the upright position (access valve at the top) when removing liquid refrigerant for charging. For a cylinder without a dip tube, invert the cylinder (access valve on the bottom) when removing liquid refrigerant.

Because Puron (R-410A) refrigerant is a blend, it is strongly recommended that refrigerant always be removed from the cylinder as a liquid. Admit liquid refrigerant into the system in the discharge line. If adding refrigerant into the suction line, use a commercial metering/expansion device at the gauge manifold; remove liquid from the cylinder, pass it through the metering device at the gauge set and then pass it into the suction line as a vapor. Do not remove Puron (R-410A) refrigerant from the cylinder as a vapor.

Preliminary Charge —

Before starting the unit, charge R-410A liquid refrigerant into the high side of each 38AU circuit through the liquid service valve(s). The amount of refrigerant added must be at least 80% of the operating charge listed in Tables 5 or 6 for LINEAR line length LESS the factory charge quantity (if factory shipping charge has not been removed). See example below.

Allow high and low side pressures to equalize. If pressures do not equalize readily, charge R-410A vapor (using special service manifold with expansion device) into the suction line service port for the low side of system to assure charge in the evaporator. Refer to GTAC II, Module 5, Charging, Recover, Recycling, and Reclamation for liquid charging procedures.

Example:

38AUZ*12

60-ft (18.3 m) linear line length

Equivalent line length 90-ft (27.4 m)

Liquid Lift: 20-ft (6.1 m)

Select line sizes from Table 5 (38AUZ):

Liquid $^1/_2$ in

Suction 1 $^1/_8$ in.

Charge 23.5 lbs (at 75-ft linear length)

80% of Operating Charge:

0.80 x 23.5 = 18.8 lbs

Factory Shipping Charge: 16 lbs

Field-Charge quantity: 18.8 - 16.0 = 2.8 lbs

For linear line lengths longer than 125 ft (38 m), contact your local Carrier representative for system charge value.

Step 7 — Install Accessories

Accessories requiring modifications to unit wiring should be completed now. These accessories may include Winter Start controls and Low Ambient controls. Refer to the instructions shipped with the accessory.

Step 8 — Complete Electrical Connections

⚠ WARNING

ELECTRICAL SHOCK HAZARD

Failure to follow this warning could result in personal injury or death.

Do not use gas piping as an electrical ground. Unit cabinet must have an uninterrupted, unbroken electrical ground to minimize the possibility of personal injury if an electrical fault should occur. This ground may consist of electrical wire connected to unit ground lug in control compartment, or conduit approved for electrical ground when installed in accordance with NEC (National Electrical Code); ANSI/NFPA 70, latest edition (in Canada, Canadian Electrical Code CSA [Canadian Standards Association] C22.1), and local electrical codes.

NOTE: Check all factory and field electrical connections for tightness. Field-supplied wiring shall conform with the limitations of 63°F (33°C) rise.

Field Power Supply —

If equipped with optional Powered Convenience Outlet: The power source leads to the convenience outlet's transformer primary are not factory connected. Installer must connect these leads according to required operation of the convenience outlet. If an always-energized convenience outlet operation is desired, connect the source leads to the line side of the unit-mounted disconnect. (Check with local codes to ensure this method is acceptable in your area.) If a de-energize via unit disconnect switch operation of the convenience outlet is desired, connect the source leads to the load side of the unit disconnect. On a unit without a unit-mounted disconnect, connect the source leads to compressor contactor C and indoor fan contactor IFC pressure lugs with unit field power leads..

Field power wires are connected to the unit at line-side pressure lugs on compressor contactor C and TB1 (see wiring diagram label for control box component arrangement) or at factory-installed option non-fused disconnect switch. Max wire size is #4 AWG (copper only).

NOTE: TEST LEADS - Unit may be equipped with short leads (pigtails) on the field line connection points on contactor C or optional disconnect switch. These leads are for factory run-test purposes only; remove and discard before connecting field power wires to unit connection points. Make field power connections directly to line connection pressure lugs only.

⚠ WARNING

FIRE HAZARD

Failure to follow this warning could cause in personal injury, death and/or equipment damage.

Do not connect aluminum wire between disconnect switch and condensing unit. Use only copper wire. (See Fig. 12.)

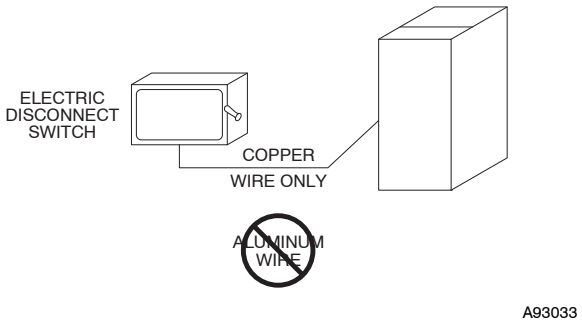

Fig. 12 - Disconnect Switch and Unit

Units with Factory-Installed Non-Fused Disconnect —

The factory-installed option disconnect switch is located in a weatherproof enclosure located under the main control box. The manual switch handle is accessible through an opening in the access panel.

Units Without Factory-Installed Non-Fused Disconnect —

When installing units, provide a disconnect switch per NEC (National Electrical Code) of adequate size. Disconnect sizing data is provided on the unit informative plate. Locate on unit cabinet or within sight of the unit per national or local codes. Do not cover unit informative plate if mounting the disconnect on the unit cabinet.

All Units —

All field wiring must comply with NEC and all local codes. Size wire based on MCA (Minimum Circuit Amps) on the unit informative plate. See Fig. 13 for power wiring connections to the unit contactor and terminal block and equipment ground.

Provide a ground-fault and short-circuit over-current protection device (fuse or breaker) per NEC Article 440 (or local codes). Refer to unit informative data plate for MOCP (Maximum Over-current Protection) device size.

All units except 208/230-v units are factory wired for the voltage shown on the nameplate. *If the 208/230-v unit is to be connected to a 208-v power supply, the control transformer must be rewired by moving the black wire with the 1/4-in. female spade connector from the 230-v connection and moving it to the 208-v 1/4-in. male terminal on the primary side of the transformer.* Refer to unit label diagram for line-side information.

Affix the crankcase heater warning sticker to the unit disconnect switch.

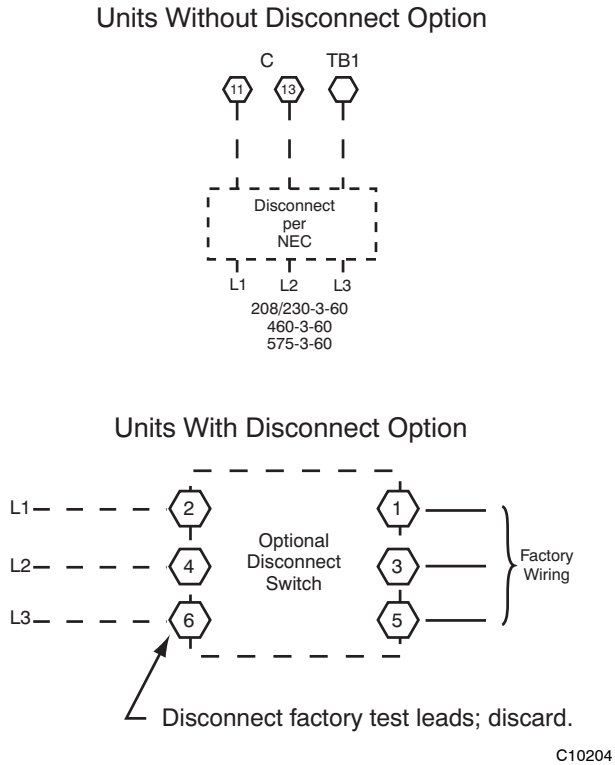

Fig. 13 - Power Wiring Connections

Convenience Outlets —

⚠ WARNING

ELECTRICAL OPERATION HAZARD

Failure to follow this warning could result in personal injury or death.

Units with convenience outlet circuits may use multiple disconnects. Check convenience outlet for power status before opening unit for service. Locate its disconnect switch, if appropriate, and open it. Tag-out this switch, if necessary.

Two types of convenience outlets are offered on 38AU models: Non-powered and unit-powered. Both types provide a 125-volt GFCI (ground-fault circuit-interrupter) duplex receptacle rated at 15-A behind a hinged waterproof access cover, located on the end panel of the unit. See Fig. 14.

Non-powered type: This type requires the field installation of a general-purpose 125-volt 15-A circuit powered from a source elsewhere in the building. Observe national and local codes when selecting wire size, fuse or breaker requirements and disconnect switch size and location. Route 125-v power supply conductors into the bottom of the utility box containing the duplex receptacle.

Maximum continuous current for this type of convenience outlet (non-unit powered) must not exceed 8 Amps.

Unit-powered type: A unit-mounted transformer is factory-installed to stepdown the main power supply voltage to the unit to 115-v at the duplex receptacle. This option also includes a manual switch with fuse, located in a utility box and mounted on a bracket behind the convenience outlet; access is through the unit's control box access panel. See Fig. 14.

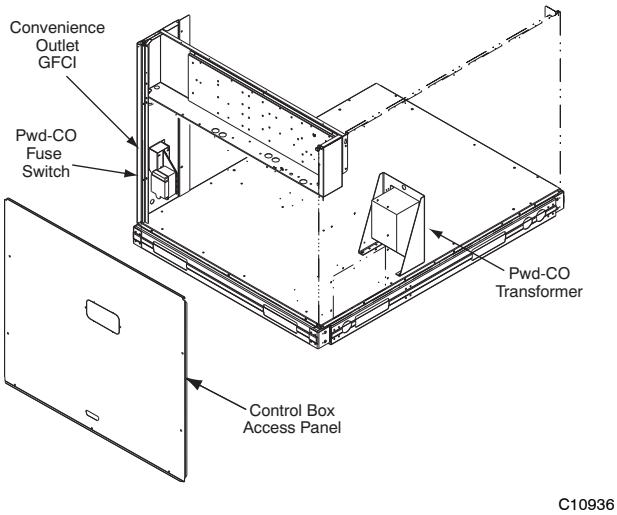

Fig. 14 - Convenience Outlet Location

The primary leads to the convenience outlet transformer are not factory-connected. Selection of primary power source is a customer-option. If local codes permit, the transformer primary leads can be connected at the line-side terminals on the unit-mounted non-fused disconnect or HACR breaker switch; this will provide service power to the unit when the unit disconnect switch or HACR switch is open. Other connection methods will result in the convenience outlet circuit being de-energized when the unit disconnect or HACR switch is open. See Fig. 15.

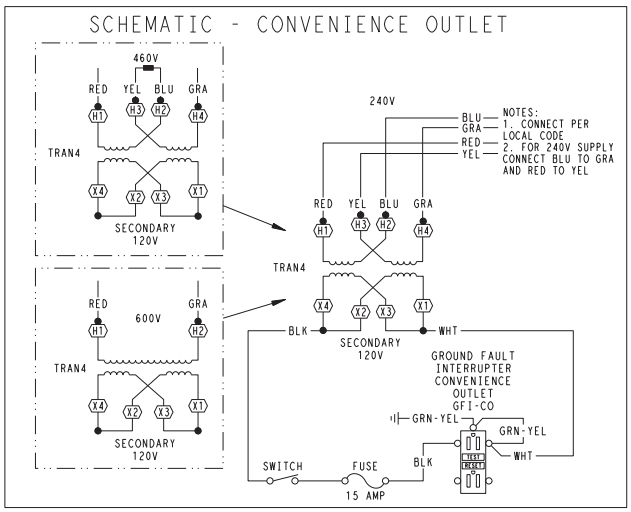

UNIT VOLTAGE	CONNECT AS	PRIMARY CONNECTIONS	TRANSFORMER TERMINALS
208, 230	240	L1: RED + YEL L2: BLU + GRA	H1 + H3 H2 + H4
460	480	L1: RED Splice BLU + YEL L2: GRA	H1 H2 + H3 H4
575	600	L1: RED L2: GRA	H1 H2

Fig. 15 - Powered Convenience Outlet Wiring

The unit-powered convenience outlet has a 1000 VA rated transformer. Maximum continuous current must not exceed 8 Amps.

Test the GFCI receptacle by pressing the TEST button on the face of the receptacle to trip and open the receptacle. Check for proper grounding wires and power line phasing if the GFCI receptacle does not trip as required. Press the RESET button to clear the tripped condition.

Fuse on power type: The factory fuse is a Bussman "Fusetron" T-15, non-renewable screw-in (Edison base) type plug fuse.

⚠ WARNING

ELECTRICAL OPERATION HAZARD

Failure to follow this warning could result in personal injury or death.

Using unit-mounted convenience outlets: Units with unit-mounded convenience outlet circuits will often require that two disconnects be opened to de-energize all power to the unit. Treat all units as electrically energized until the convenience outlet power is also checked and de-energization is confirmed. Observe National Electrical Code Article 210, Branch Circuits, for use of convenience outlets.

Installing Weatherproof Cover: A weatherproof while in use cover for the factory installed convenience outlets is now required by UL standards. This cover cannot be factory mounted due its depth; it must be installed at unit installation. For shipment, the convenience outlet is covered with a blank cover plate.

The weatherproof cover kit is shipped in the unit's control box. The kit includes the hinged cover, a backing plate and gasket.

DISCONNECT ALL POWER TO UNIT AND CONVENIENCE OUTLET.

Remove the blank cover plate at the convenience outlet; discard the blank cover.

Loosen the two screws at the GFCI duplex outlet, until approximately $^1/_2$-in (13 mm) under screw heads are exposed. Press the gasket over the screw heads. Slip the backing plate over the screw heads at the keyhole slots and align with the gasket; tighten the two screws until snug (do not overtighten).

Mount the weatherproof cover to the backing plate as shown in Fig. 16. Remove two slot fillers in the bottom of the cover to permit service tool cords to exit the cover. Check for full closing and latching.

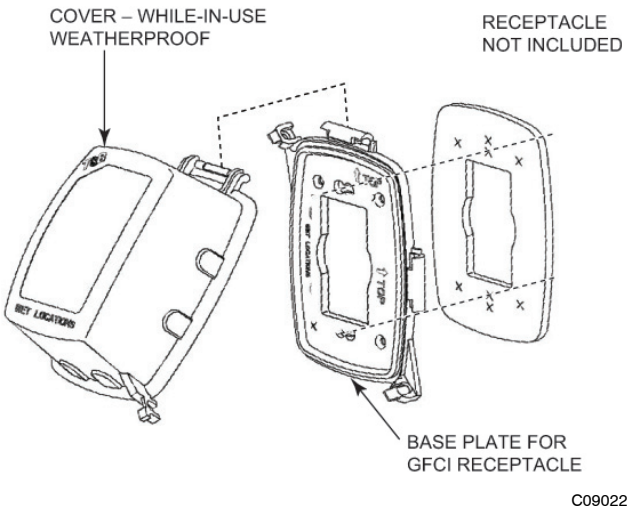

Fig. 16 - Weatherproof Cover Installation

All Units —

Voltage to compressor terminals during operation must be within voltage range indicated on unit nameplate. See Tables 11 and 12. On 3-phase units, voltages between phases must be balanced within 2% and the current within 10%. Use the formula shown in the legend for Tables 11 and 12, Note 4 (see page 25) to determine the percent of voltage imbalance. Operation on improper line voltage or excessive phase imbalance constitutes abuse and may cause damage to electrical components. Such operation would invalidate any applicable Carrier warranty.

Field Control Wiring —

38AU unit control voltage is 24 v. See Fig. 28 (38AUZ) and Fig. 29 (38AUD) for typical field control connections and the unit's label diagram for field-supplied wiring details. Route control wires to the 38AU unit through the opening in unit's end panel to the connections terminal board in the unit's control box.

Remainder of the system controls connection will vary according to the specific construction details of the indoor section (air handler or packaged fan coil). Fig. 17 (38AUZ) and Fig. 18 (38AUD) depict typical connections to a Carrier 40RU fan coil unit. Plan for field connections carefully and install control wiring correctly per the project plan. Additional components and supplemental transformer accessory may be required.

The 38AU unit requires an external temperature control device. This device can be a thermostat (field-supplied) or a PremierLink controller (available as a field-installed accessory, for use on a Carrier Comfort Network or as a stand alone control).

Thermostat —

Install a Carrier-approved accessory thermostat according to installation instructions included with the accessory. Locate the thermostat accessory on a solid wall in the conditioned space to sense average temperature in accordance with the thermostat installation instructions.

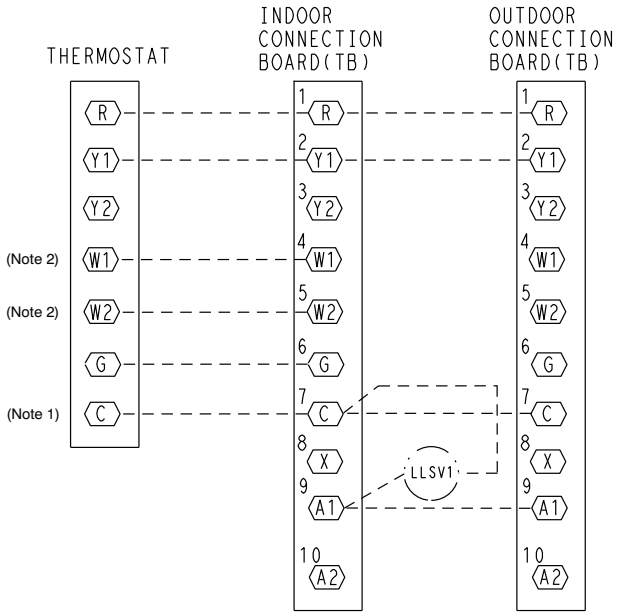

Fig. 17 - Typical Remote Thermostat Connections — 38AUZ

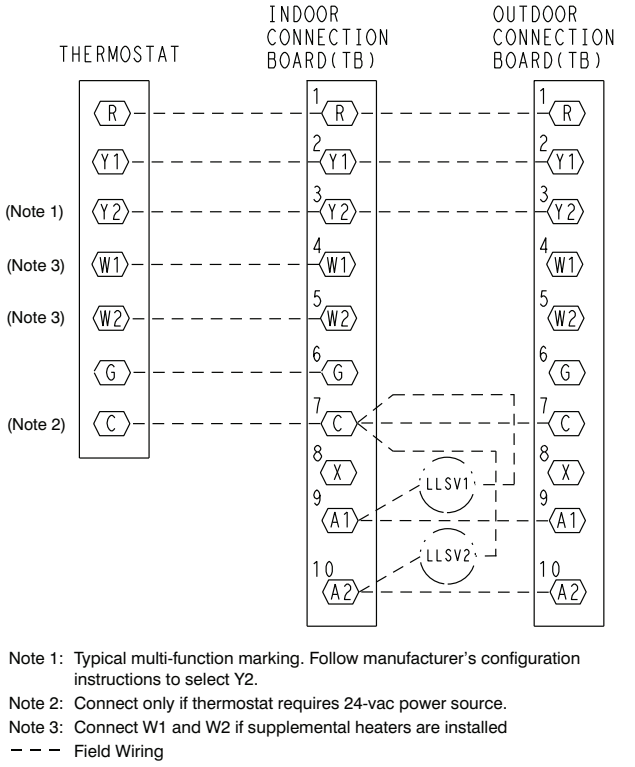

Fig. 18 - Typical Remote Thermostat Connections — 38AUD

38AUZ Unit - 38AUZ unit is a single-stage cooling unit. If no economizer function is required, select a single-stage cooling thermostat. If an integrated economizer function is required, select a two-stage cooling thermostat.

The 38AUD is a dual-circuit, two-stage cooling unit. Select a two—stage cooling thermostat.

Select a thermostat cable or equivalent single leads of different colors with minimum of four leads for 38AUZ or five leads for 38AUD unit. Check the thermostat installation instructions for additional features which might require additional conductors in the cable.

For wire runs up to 50 ft. (15 m), use no. 18 AWG (American Wire Gage) insulated wire (35°C minimum). For 50 to 75 ft. (15 to 23 m), use no. 16 AWG insulated wire (35°C minimum). For over 75 ft. (23 m), use no. 14 AWG insulated wire (35°C minimum). All wire sizes larger than no. 18 AWG cannot be directly connected to the thermostat and will require a junction box and splice at the thermostat.

PremierLink (accessory installation) – Refer to Form 33CS-58SI for details on connecting the PremierLink controller and its various sensors.

If the unit will be operating at 208-3-60 power, remove the black wire (BLK) from the transformer primary connection labelled “230” and move it to the connection labelled “208”. See Fig. 19.

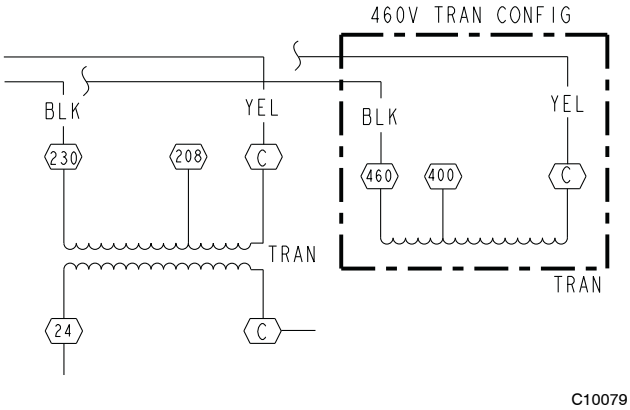

Fig. 19 - Control Transformer Wiring

External Devices —

The 38AU control transformers provide 24-v NEC Class 2 power sources to energize external control devices. These devices will include the indoor fan motor contactor (or control relay). These devices may also include liquid line solenoid valve (two on 38AUD model), economizer control relay, supplemental electric heater contactors or control relays and other devices selected by system designer.

Control transformer TRAN1 provides control power through terminal R to C on the field connection terminal strip TB for supply fan motor interlock. This source may also be used to energize economizer control relay and electric heater contactors or relays. Maximum available power is 20 va. Check concurrent loadings by external control devices. If the maximum concurrent loading exceeds 20 va, purchase and install the accessory Transformer-Relay package (available for 208/230 and 460-v units).

38AUD Only: Control transformer TRAN3 provides control power through terminals A1 (9) and A2 (10) to C for liquid line solenoids. Maximum available power is 75 va. These outputs are switched ON/OFF by the Solenoid Valve Relays.

Table 11 – Electrical Data — 38AUZ*07-14 60 Hz Units

WITHOUT POWERED CONVENIENCE OUTLET											
UNIT	V–Ph–Hz	VOLTAGE RANGE‡		COMPRESSOR 1		OFM (ea)		POWER SUPPLY		DISCONNECT SIZE	
		MIN	MAX	RLA	LRA	QTY	FLA	MCA	Fuse or HACR Brkr	FLA	LRA
38AUZ*07 Units produced on or after 02/09/2015	208/230–3–60	187	253	19.6	136	2	1.5	28/28	45/45	26/26	142/142
	460–3–60	414	506	8.2	66	2	0.8	12	20	11	70
	575–3–60	518	633	6.6	55	2	0.7	10	15	9	59
38AUZ*07 Units produced on or prior to 02/08/2015	208/230–3–60	187	253	19.0	123	2	1.5	26.8/26.8	45/45	25/25	129/129
	460–3–60	414	506	9.7	62	2	0.8	13.7	20	13	66
	575–3–60	518	633	7.4	50	2	0.7	10.4	15	10	54
38AUZ*08	208/230–3–60	187	253	25.0	164	2	1.5	35/35	50/50	32/32	170/170
	460–3–60	414	506	12.2	100	2	0.8	17	25	16	104
	575–3–60	518	633	9.0	78	2	0.7	13	20	12	82
38AUZ*12	208/230–3–60	187	253	30.1	225	2	1.5	41/41	60/60	38/38	231/231
	460–3–60	414	506	16.7	114	2	0.8	23	30	21	118
	575–3–60	518	633	12.2	80	2	0.7	17	25	16	84
38AUZ*14	208/230–3–60	187	253	48.1	245	2	1.5	64/64	80/80	59/59	251/251
	460–3–60	414	506	18.6	125	2	0.8	25	30	23	129
	575–3–60	518	633	14.7	100	2	0.7	20	30	19	104

WITH POWERED CONVENIENCE OUTLET											
UNIT	V–Ph–Hz	VOLTAGE RANGE‡		COMPRESSOR 1		OFM (ea)		POWER SUPPLY		DISCONNECT SIZE	
		MIN	MAX	RLA	LRA	QTY	FLA	MCA	Fuse or HACR Brkr	FLA	LRA
38AUZ*07 Units produced on or after 02/09/2015	208/230–3–60	187	253	19.6	136	2	1.5	33/33	50/50	32/32	147/147
	460–3–60	414	506	8.2	66	2	0.8	15	20	14	72
	575–3–60	518	633	6.6	55	2	0.7	12	15	11	61
38AUZ*07 Units produced on or prior to 02/08/2015	208/230–3–60	187	253	19.0	123	2	1.5	31.6/31.6	50/50	31/31	134/134
	460–3–60	414	506	9.7	62	2	0.8	15.9	25	16	68
	575–3–60	518	633	7.4	50	2	0.7	12.1	15	12	56
38AUZ*08	208/230–3–60	187	253	25.0	164	2	1.5	40/40	60/60	38/38	175/175
	460–3–60	414	506	12.2	100	2	0.8	20	30	18	106
	575–3–60	518	633	9.0	78	2	0.7	15	20	14	84
38AUZ*12	208/230–3–60	187	253	30.1	225	2	1.5	46/46	60/60	44/44	236/236
	460–3–60	414	506	16.7	114	2	0.8	25	30	24	120
	575–3–60	518	633	12.2	80	2	0.7	19	30	18	86
38AUZ*14	208/230–3–60	187	253	48.1	245	2	1.5	68/68	80/80	64/64	256/256
	460–3–60	414	506	18.6	125	2	0.8	28	45	26	131
	575–3–60	518	633	14.7	100	2	0.7	22	30	20	106

NOTE: See “Legend and Notes for Tables 11 and 12” on page 25.

Table 12 – Electrical Data — 38AUD*12-14 60 Hz Units

WITHOUT POWERED CONVENIENCE OUTLET													
UNIT	V–Ph–Hz	VOLTAGE RANGE‡		COMPRESSOR 1		COMPRESSOR 2		OFM (ea)		POWER SUPPLY		DISCONNECT SIZE	
		MIN	MAX	RLA	LRA	RLA	LRA	QTY	FLA	MCA	Fuse or HACR Brkr	LRA	RLA
38AUD*12	208/230–3–60	187	253	15.9	110	15.9	110	2	1.5	39/39	50/50	40/40	226/226
	460–3–60	414	506	7.7	52	77	52	2	0.8	19	25	20	108
	575–3–60	518	633	5.7	39	5.7	39	2	0.7	15	20	15	82
38AUD*14	208/230–3–60	187	253	22.4	149	22.4	149	2	1.5	54/54	60/60	55/55	304/304
	460–3–60	414	506	10.6	75	10.6	75	2	0.8	26	30	26	154
	575–3–60	518	633	7.7	54	7.7	54	2	0.7	19	25	19	112

WITH POWERED CONVENIENCE OUTLET													
UNIT	V–Ph–Hz	VOLTAGE RANGE‡		COMPRESSOR 1		COMPRESSOR 2		OFM (ea)		POWER SUPPLY		DISCONNECT SIZE	
		MIN	MAX	RLA	LRA	RLA	LRA	QTY	FLA	MCA	Fuse or HACR Brkr	LRA	RLA
38AUD*12	208/230–3–60	187	253	15.9	110	15.9	110	2	1.5	44/44	50/50	46/46	231/231
	460–3–60	414	506	7.7	52	7.7	52	2	0.8	22	25	22	110
	575–3–60	518	633	5.7	39	5.7	39	2	0.7	16	20	17	84
38AUD*14	208/230–3–60	187	253	22.4	149	22.4	149	2	1.5	59/59	80/80	60/60	309/309
	460–3–60	414	506	10.6	75	10.6	75	2	0.8	28	35	29	156
	575–3–60	518	633	7.7	54	7.7	54	2	0.7	21	25	21	114

NOTE: See "Legend and Notes for Tables 11 and 12" below

Legend and Notes for Tables 11 and 12

LEGEND:

FLA – Full Load Amps
LRA – Locked Rotor Amps
MOCP – Maximum Over Current Protection
NEC – National Electrical Code
RLA – Rated Load Amps

‡ Units are suitable for use on electrical systems where voltage supplied to the unit terminals is not below or above the listed limits.

NOTES:

1. The MCA and Fuse values are calculated in accordance with The NEC. Article 440.
2. Motor RLA and LRA values are established in accordance with Underwriters' Laboratories (UL). Standard 1995.
3. The 575–v units are UL, Canada–listed only.
4. **Unbalanced 3-Phase Supply Voltage**
   Never operate a motor where a phase imbalance in supply voltage is greater than 2%. Use the following formula to determine the percentage of voltage imbalance.

Example: Supply voltage is 230-3-60

$$\text{\% Voltage Imbalance} = 100 \times \frac{\text{max voltage deviation from average voltage}}{\text{average voltage}}$$

AB = 224 v
BC = 231 v
AC = 226 v

$$\text{Average Voltage} = \frac{(224 + 231 + 226)}{3} = \frac{681}{3}$$

$$= 227$$

Determine maximum deviation from average voltage.
(AB) 227 – 224 = 3 v
(BC) 231 – 227 = 4 v
(AC) 227 – 226 = 1 v
Maximum deviation is 4 v.
Determine percent of voltage imbalance.

$$\text{\% Voltage Imbalance} = 100 \times \frac{4}{227}$$

$$= 1.76\%$$

This amount of phase imbalance is satisfactory as it is below the maximum allowable 2%.

IMPORTANT: If the supply voltage phase imbalance is more than 2%, contact your local electric utility company immediately.

Step 9 — Wind Baffles for Low Ambient Control

Models 38AZB and 38AUDB include the factory installed 32LT Motormaster Low Ambient Control. Model 38AUDC (with hot gas bypass option) also includes the 32LT Motormaster Low Ambient Control as a standard feature.

Units with 32LT Motormaster control require the addition of wind baffles to ensure full range low ambient operation. Material data and dimensions for wind baffles are included in the Appendix C section, Low Ambient Control, starting on page 48. Fabricate the wind baffles and mount per instructions.

PRE-START-UP

IMPORTANT: Before beginning Pre-Start-Up or Start-Up, review Start-Up Checklist at the back of this book. The Checklist assures proper start-up of a unit and provides a record of unit condition, application requirements, system information, and operation at initial start-up.

⚠ CAUTION

UNIT DAMAGE HAZARD

Failure to follow this caution may result in equipment damage.

Do not attempt to start the condensing unit, even momentarily, until the following steps have been completed. Compressor damage may result.

System Check

1. The electrical power source must agree with the unit's nameplate rating.
2. Check all air handler(s) and other equipment auxiliary components. Consult the manufacturer's instructions regarding any other equipment connected to the condensing unit. If the unit has field-installed accessories, be sure all are properly installed and correctly wired. If used, the airflow switch must be properly installed.
3. Check tightness of all electrical connections.
4. Be sure liquid line and low side of the system are properly leak checked and dehydrated.
5. Be sure the unit is properly charged. See "Preliminary Charge", below.
6. Open the liquid line and suction line service valves.
7. The crankcase heater must be firmly attached to the compressor crankcase. Be sure the crankcase is warm (heater must be on for 24 hours before starting compressor).

Turn On Crankcase Heater —

Turn on the crankcase heater for 24 hours before starting the unit to be sure all the refrigerant is out of the oil. To energize the crankcase heater, proceed as follows:

1. Set the space thermostat set point above the space temperature so there is no demand for cooling.
2. Close the field disconnect.

Preliminary Charge —

Before starting the unit, charge liquid refrigerant into the high side of the system through the liquid service valve. The amount of refrigerant added must be at least 80% of the operating charge listed in the Physical Data table (Tables 1A through 2B, pages 6 through 9). Allow high and low side pressures to equalize before starting compressor. If pressures do not equalize readily, charge vapor on low side of system to assure charge in the evaporator. Refer to GTAC II, Module 5, Charging, Recover, Recycling, and Reclamation for liquid charging procedures.

⚠ CAUTION

UNIT DAMAGE HAZARD

Failure to follow this caution may result in equipment damage.

Prior to starting compressor, a preliminary charge of refrigerant must be added to avoid possible compressor damage.

START-UP

38AU Units: The compressor crankcase heater must be on for 24 hours before start-up. After the heater has been on for 24 hours, the unit can be started. If no time elapsed since the preliminary charge step was completed, it is unnecessary to wait the 24-hour period.

Preliminary Checks

1. Check that electric power supply agrees with unit nameplate data.
2. Verify that the compressor crankcase heater is securely in place.
3. Check that the compressor crankcase heater has been on at least 24 hours.
4. Recheck for leaks using the procedure outlined in the Pre-Start-Up section, Leak Test and Dehydration. If any leaks are detected, repair as required. Evacuate and dehydrate as described in the Leak Test and Dehydration section.
5. Ensure that the preliminary charge has been added as described in the Pre-Start-Up section, Preliminary Charge.
6. All internal wiring connections must be tight, and all barriers and covers must be in place.

NOTE: The 38AU units are factory charged with the required amount of oil. If recharging in required, use Emkarate RL 32-3MAF for the 38AU units.

Compressor Rotation —

On 3-phase units with scroll compressors, it is important to be certain that the compressor is rotating in the proper direction. 38AU units are equipped with a Comfort Alert Diagnostic Module (CADM). Alert Code 7 indicates reverse power phasing.

To correct phase order:

1. Turn off power to the unit, tag disconnect.
2. Reverse any two of the unit power leads.
3. Reapply power to the compressor, verify correct pressures.

To verify the compressor is rotating in the proper direction:

1. Connect service gages to the suction and liquid pressure fittings.
2. Energize the compressor.
3. The suction pressure should drop and the liquid pressure should rise, as is normal on any start-up.

Compressor Overload —

This overload interrupts power to the compressor when either the current or internal motor winding temperature becomes excessive, and automatically resets when the internal temperature drops to a safe level. This overload may require up to 60 minutes (or longer) to reset. If the internal overload is suspected of being open, disconnect the electrical power to the unit and check the circuit through the overload with an ohmmeter or continuity tester.

Advanced Scroll Temperature Protection (ASTP) —

A label located above the terminal box identifies Copeland Scroll compressor models that contain this technology. See Fig. 20. Advanced Scroll Temperature Protection (ASTP) is a form of internal discharge temperature protection, that unloads the scroll compressor when the internal temperature reaches approximately 149°C (300°F). At this temperature, an internal bi-metal disk valve opens and causes the scroll elements to separate, which stops compression. Suction and discharge pressures balance while the motor continues to run. The longer the compressor runs unloaded, the longer it must cool before the bi-metal disk resets. See Fig. 21.

To manually reset ASTP, the compressor should be stopped and allowed to cool. If the compressor is not stopped, the motor will run until the motor protector trips, which occurs up to 90 minutes later. Advanced Scroll Temperature Protection will reset automatically before the motor protector resets, which may take up to 2 hours.

C10080

Fig. 20 - Advanced Scroll Temperature Protection Label

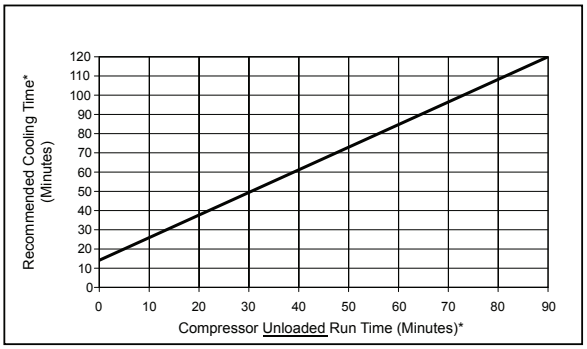

*Times are approximate.
NOTE: Various factors, including high humidity, high ambient temperature, and the presence of a sound blanket will increase cool-down times.

C10081

Fig. 21 - Recommended Minimum Cool-Down Time After Compressor is Stopped

Start Unit

Set the space thermostat to a set point above space temperature so that there is no demand for cooling. Close the 38AU disconnect switch. Only the crankcase heater will be energized.

Reset the space thermostat below ambient so that a call for cooling is ensured.

⚠ CAUTION

UNIT DAMAGE HAZARD

Failure to follow this caution may result in equipment damage.

Never charge liquid into the low-pressure side of system. Do not overcharge. During charging or removal of refrigerant, be sure indoor-fan system is operating. Ensure both outdoor fan motors are running; bypass any Motormaster function.

Adjust Refrigerant Charge —

Refer to Cooling Charging Charts, Fig. 22 through Fig. 27. For applications with line lengths greater than 125 ft (38 m), contact Carrier representative. Vary refrigerant until the conditions of the chart are met. Note that the charging charts are different from the type normally used. The charts are based on charging the units to the correct subcooling for the various operating conditions. Accurate pressure gage and temperature sensing device are required. Connect the pressure gage to the service port on the liquid line service valve. Mount the temperature sensing device on the liquid line close to the liquid line service valve, and insulate it so that outdoor ambient temperature does not affect the reading. Indoor airflow must be within the unit's normal operating range. Operate the unit for a minimum of 15 minutes. Ensure that pressure and temperature readings have stabilized. Plot the liquid pressure and temperature on chart and add or reduce the charge to meet the curve. Adjust the charge to conform with the charging chart, using the liquid pressure and temperature to read the chart.

Using plotted operating point:

If plotted operating condition is -	Adjust charge by -
BELOW the curve	REDUCE charge
ABOVE the curve	ADD charge

Final Checks —

Ensure that all safety controls are operating, control panel covers are on, and the service panels are in place.

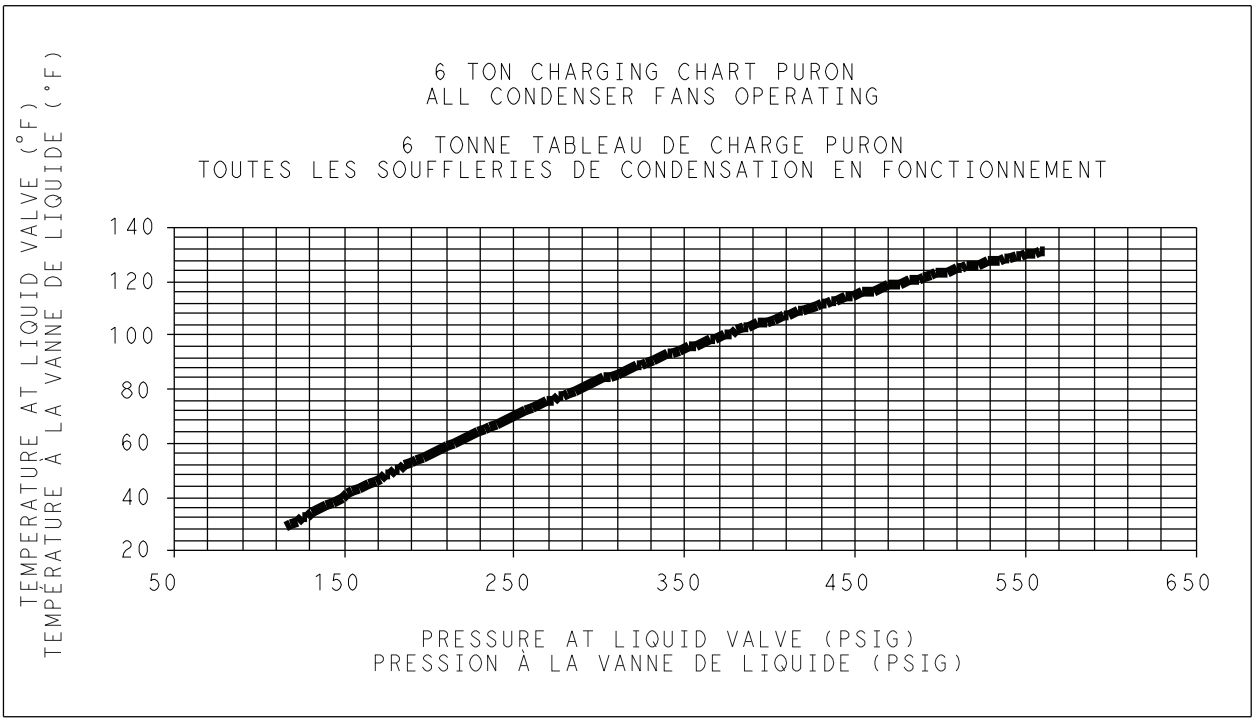

C10919

Fig. 22 - 38AUZ*07 Charging Chart (RTPF)

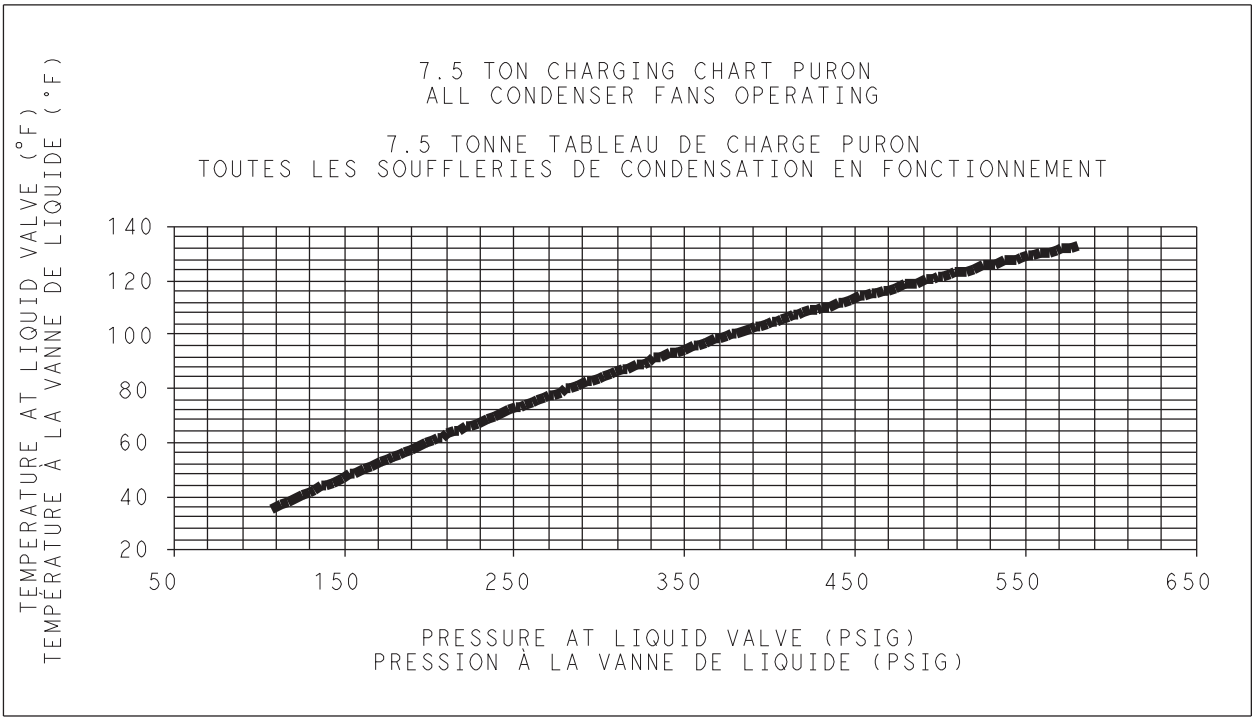

C10920

Fig. 23 - 38AUZ*08 Charging Chart (RTPF)

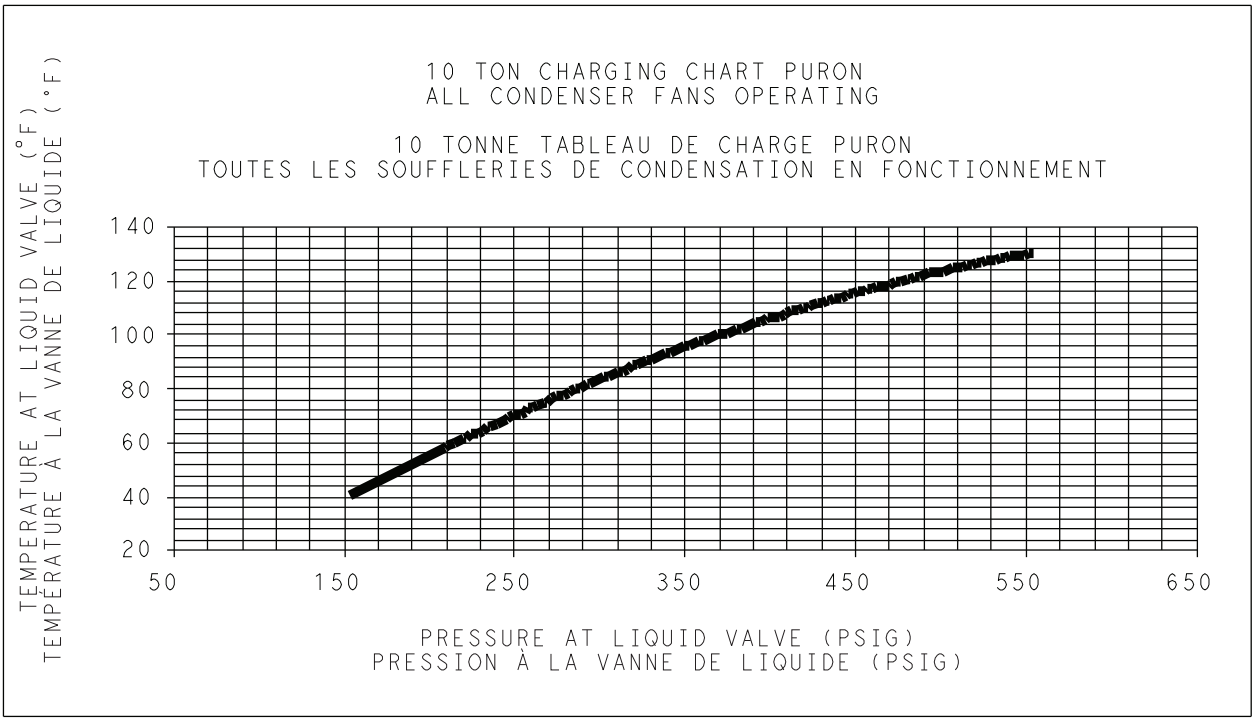

C10921

Fig. 24 - 38AUZ*12 Charging Chart (RTPF)

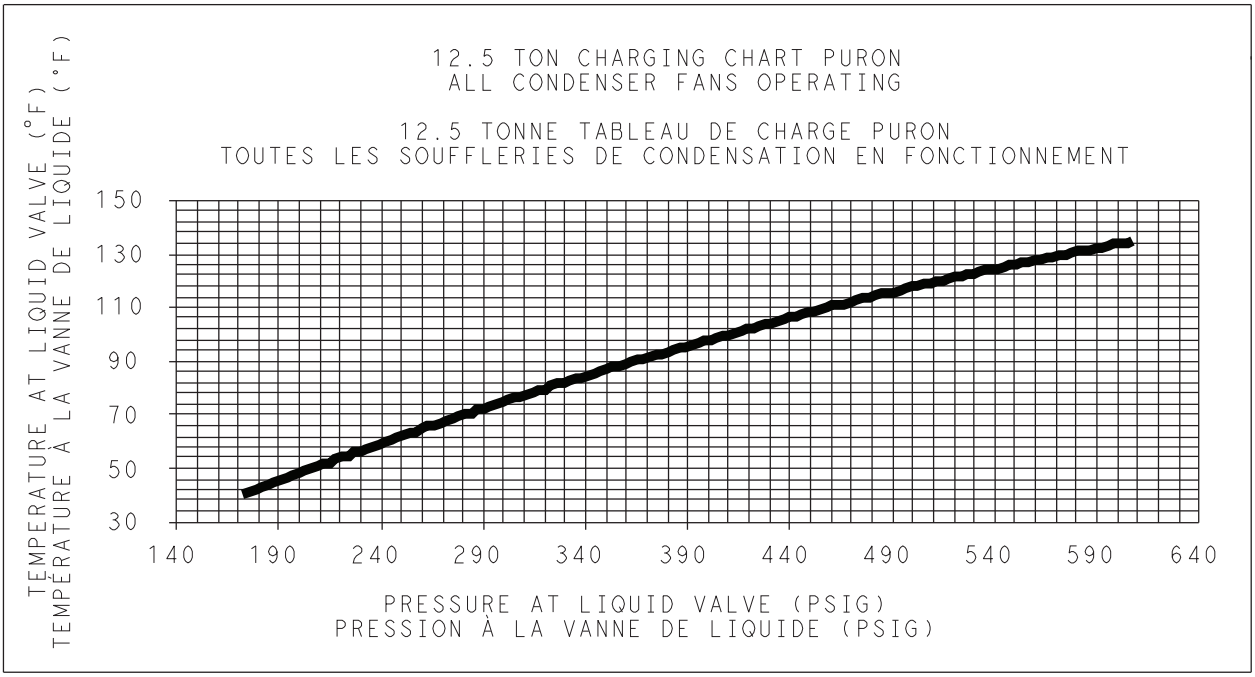

C11093

Fig. 25 - 38AUZ*14 Charging Chart (RTPF)

38AU

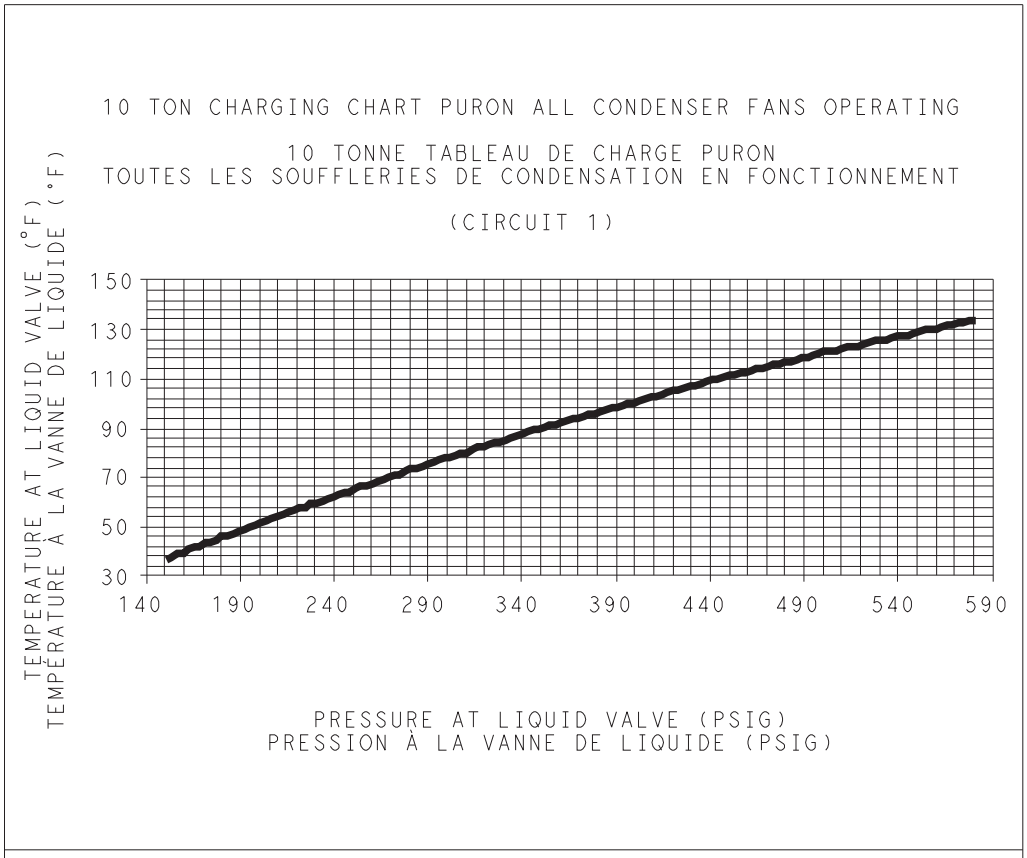

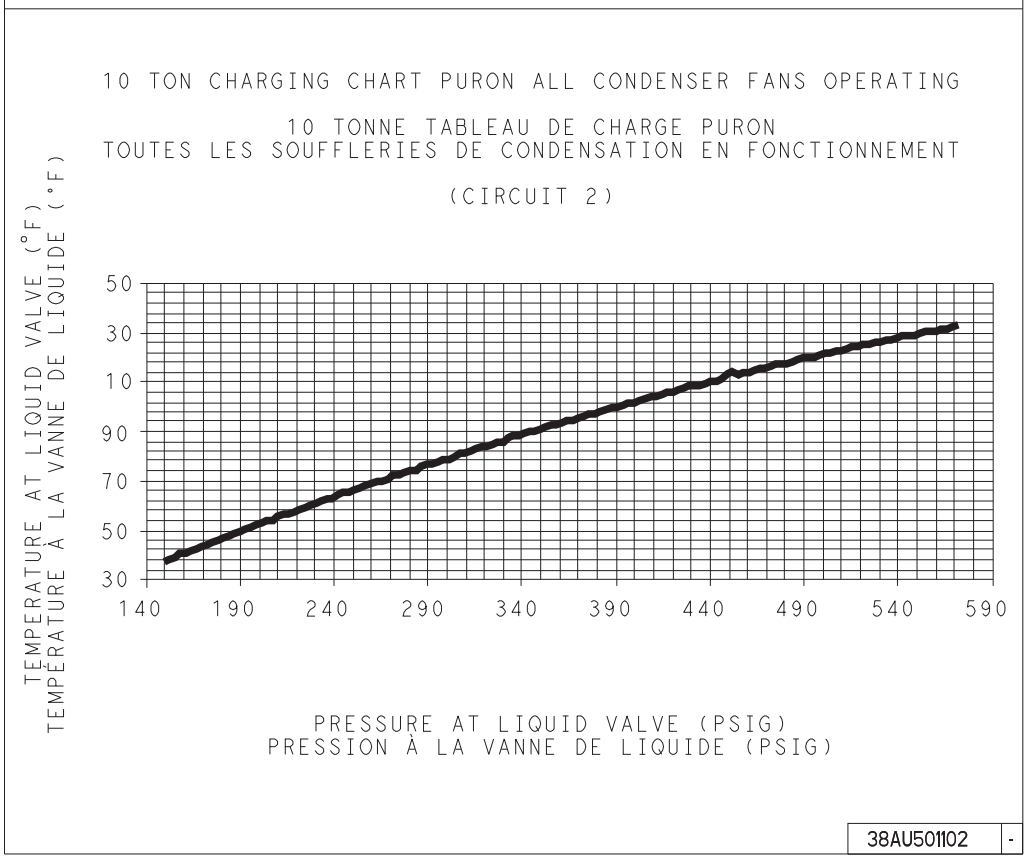

C10923

Fig. 26 - 38AUD*12 Charging Chart (RTPF)

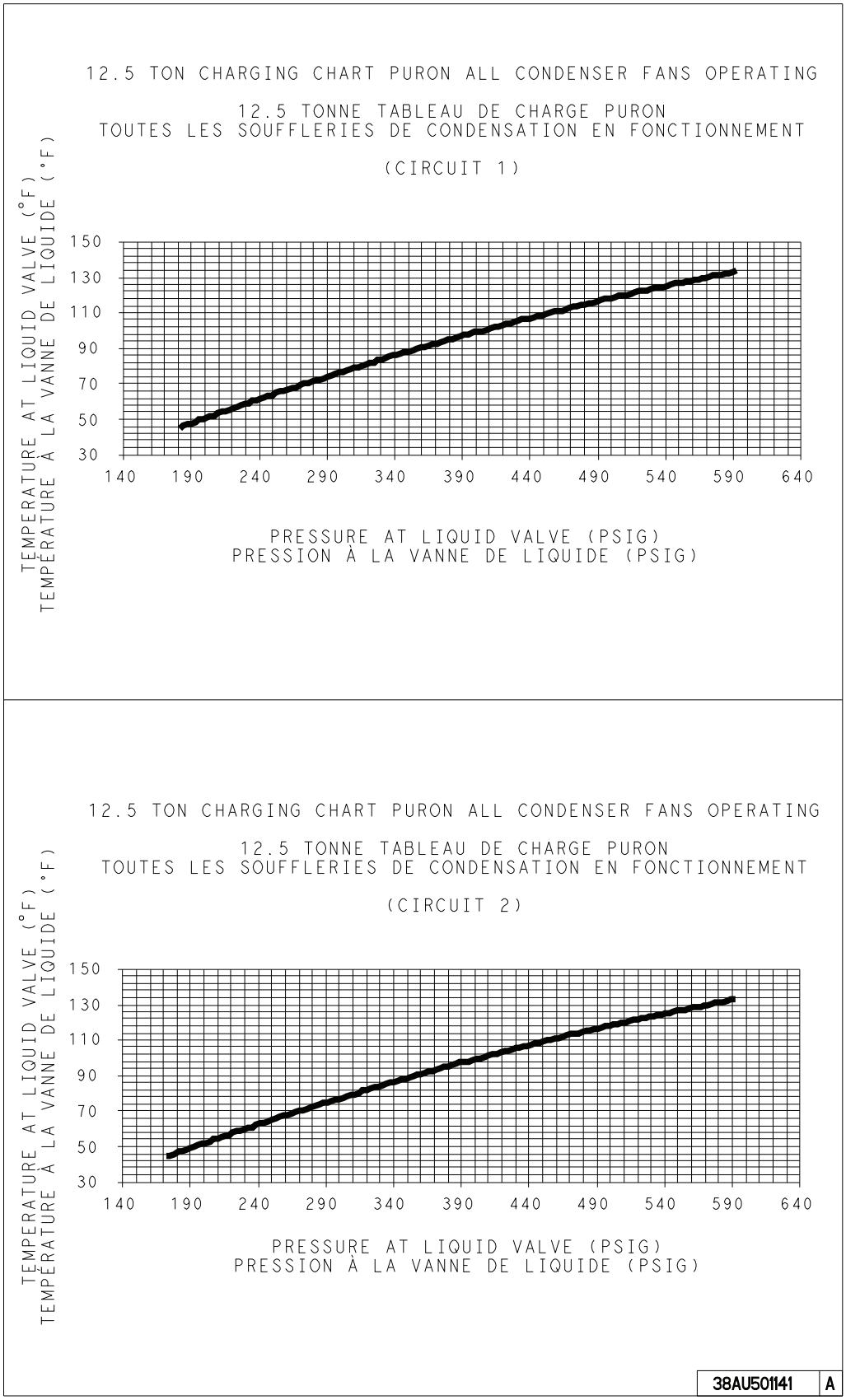

C11094

Fig. 27 - 38AUD*14 Charging Chart (RTPF)

38AU

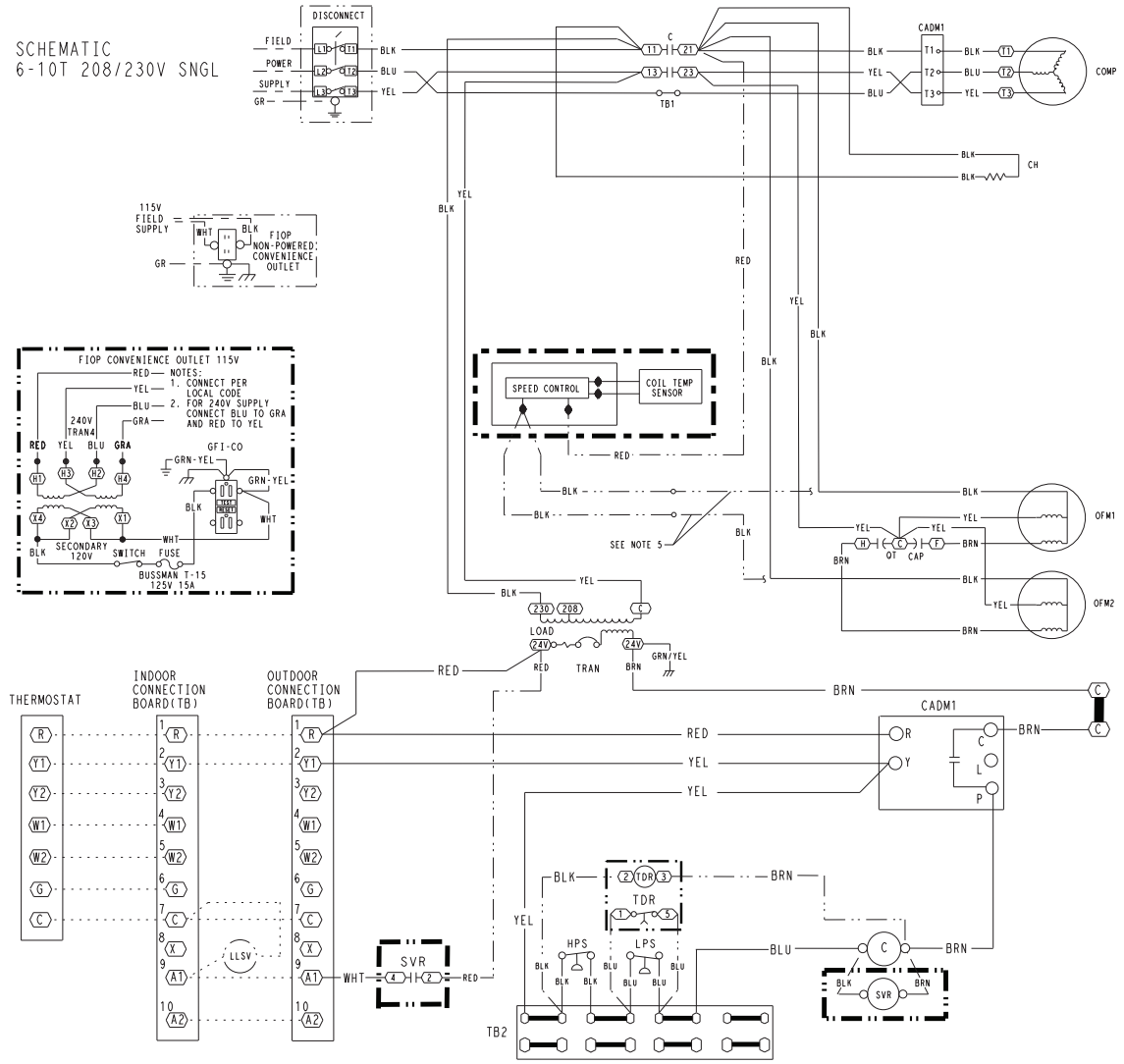

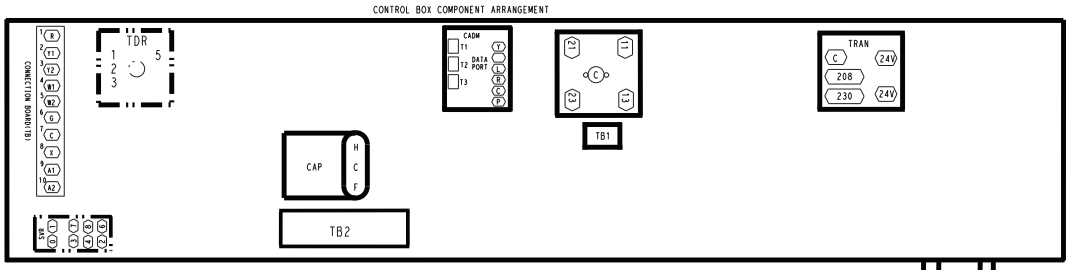

FIELD CONTROL WIRING

- FIELD SPLICE
- MARKED WIRE
- TERMINAL(MARKED)
- TERMINAL(UNMARKED)
- TERMINAL BLOCK
- SPLICE
- FACTORY WIRING
- FIELD CONTROL WIRING
- FIELD POWER WIRING
- ACCESSORY OR OPTIONAL WIRING
- TO INDICATE COMMON POTENTIAL ONLY, NOT TO REPRESENT WIRING

LEGEND

C	CONTACTOR, COMPRESSOR
CAP	CAPACITOR
CADM	COMFORT ALERT - DIAGNOSTICS MODULE
CH	CRANKCASE HEATER
COMP	COMPRESSOR MOTOR
EQUIP	EQUIPMENT
FU	FUSE
GR	GROUND
HPS	HIGH PRESSURE SWITCH
LLSV	LIQUID LINE SOLENOID VALVE
LPS	LOW PRESSURE SWITCH
OFM	OUTDOOR FAN MOTOR
OFR	OUTDOOR FAN RELAY
QT	QUADRUPLE TERMINAL
SVR	SOLENOID VALVE RELAY
TB	TERMINAL BLOCK
TDR	TIME DELAY RELAY
TRAN	TRANSFORMER

FIELD WIRING

DISCONNECT PER NEC

NOTES:

1. IF ANY OF THE ORIGINAL WIRE FURNISHED MUST BE REPLACED, IT MUST BE REPLACED WITH TYPE 90 C WIRE OR ITS EQUIVALENT.
2. USE COPPER CONDUCTORS ONLY.
3. COMPRESSORS AND FAN MOTORS ARE THERMALLY PROTECTED. THREE PHASE MOTORS ARE PROTECTED AGAINST PRIMARY SINGLE PHASING CONDITIONS.
4. TRANSFORMER IS WIRED FOR 230V UNIT. IF UNIT IS TO BE RUN WITH 208V POWER SUPPLY, DISCONNECT BLACK WIRE FROM 230V TAP AND CONNECT TO 208V TAP.
5. ON UNITS WITH SPEED CONTROL, REMOVE OFM1 AND OFM2 BLK WIRES FROM COMPRESSOR CONTACTOR TERMINAL 21 AND CONNECT TO BLK WIRES FROM SPEED CONTROL.

C10925

Fig. 28 - Typical 38AUZ Wiring Diagram

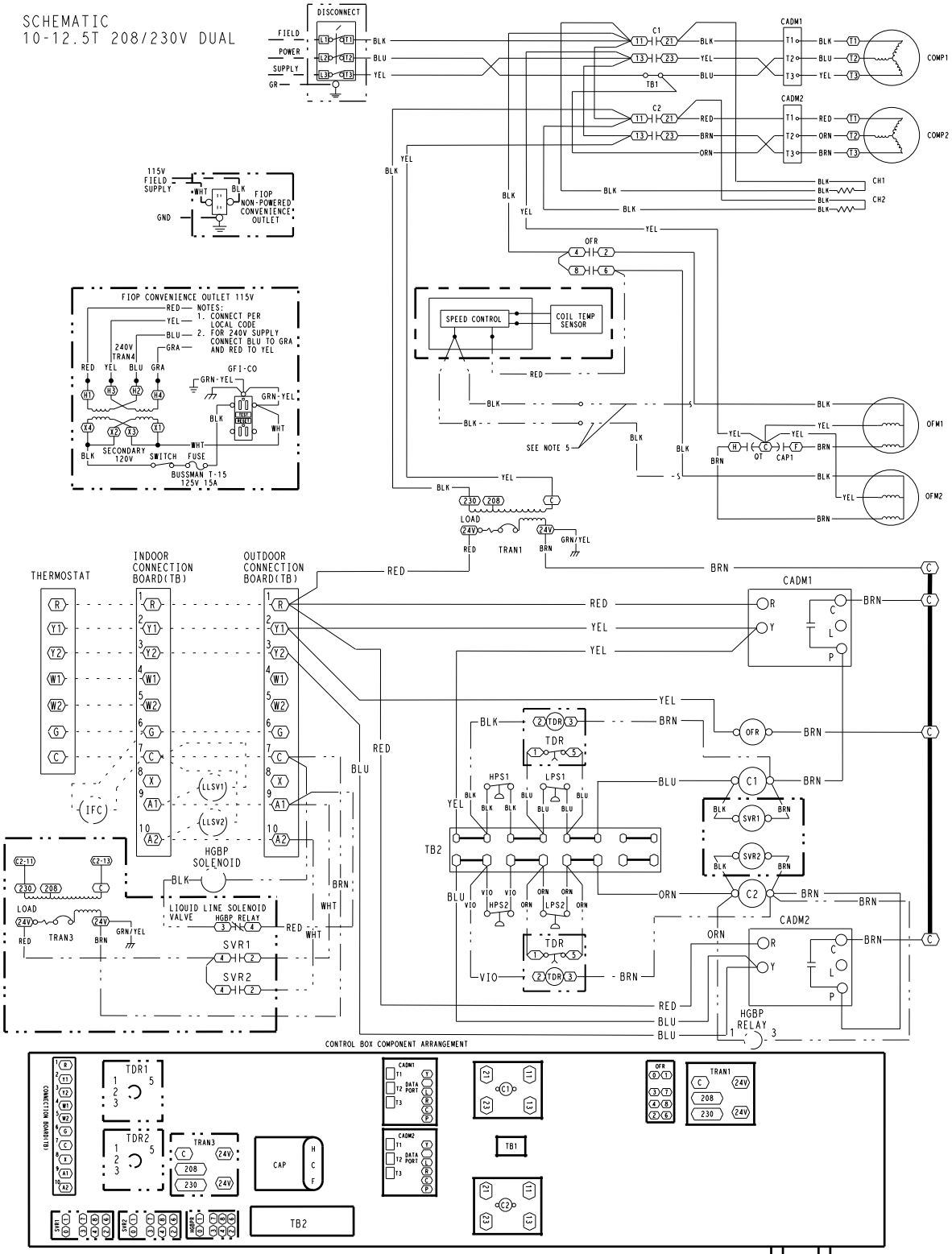

FIELD CONTROL WIRING
- FIELD SPLICE
- MARKED WIRE
- TERMINAL(MARKED)
- TERMINAL(UNMARKED)
- TERMINAL BLOCK
- SPLICE
- FACTORY WIRING
- FIELD CONTROL WIRING
- FIELD POWER WIRING
- ACCESSORY OR OPTIONAL WIRING
- TO INDICATE COMMON POTENTIAL ONLY, NOT TO REPRESENT WIRING

LEGEND

C	CONTACTOR, COMPRESSOR
CAP	CAPACITOR
CADM	COMFORT ALERT - DIAGNOSTICS MODULE
CH	CRANKCASE HEATER
COFS	CONDENSATE OVERFLOW SWITCH
COMP	COMPRESSOR MOTOR
EQUIP	EQUIPMENT
FU	FUSE
GR	GROUND
HPS	HIGH PRESSURE SWITCH
HGBP	HOT GAS BYPASS
HGBPR	HOT GAS BYPASS RELAY
IFC	INDOOR FAN CONTACTOR
LAR	LOW AMBIENT RELAY
LAS	LOW AMBIENT TEMP SWITCH
LLSV	LIQUID LINE SOLENOID VALVE
LPS	LOW PRESSURE SWITCH
OFM	OUTDOOR FAN MOTOR
OFR	OUTDOOR FAN RELAY
QT	QUADRUPLE TERMINAL
SVR	SOLENOID VALVE RELAY
TB	TERMINAL BLOCK

LEGEND

TDR	TIME DELAY RELAY
TRAN	TRANSFORMER

NOTES:

1. IF ANY OF THE ORIGINAL WIRE FURNISHED MUST BE REPLACED, IT MUST BE REPLACED WITH TYPE 90 C WIRE OR ITS EQUIVALENT.
2. USE COPPER CONDUCTORS ONLY.
3. COMPRESSORS AND FAN MOTORS ARE THERMALLY PROTECTED. THREE PHASE MOTORS ARE PROTECTED AGAINST PRIMARY SINGLE PHASING CONDITIONS.
4. TRANSFORMER IS WIRED FOR 230V UNIT. IF UNIT IS TO BE RUN WITH 208V POWER SUPPLY, DISCONNECT BLACK WIRE FROM 230V TAP AND CONNECT TO 208V TAP.
5. ON UNITS WITH SPEED CONTROL, REMOVE OFM1 AND OFM2 BLK WIRES FROM OFR AND CONNECT TO BLK WIRES FROM SPEED CONTROL.

38AU500562 | H

C12547

Fig. 29 - Typical 38AUD Wiring Diagram

OPERATING SEQUENCE

Base Unit Controls

Indoor (Supply) Fan —

The indoor fan contactor (IFC) is remotely located at the fan coil or fan section. If the thermostat fan operation is selected as Continuous, the IFC is energized and the indoor (supply) fan motor runs continuously. If the thermostat fan operation is selected as Automatic, the IFC will be energized on a call for Cooling; indoor (supply) fan motor runs. When thermostat call for Cooling is satisfied, the IFC is de-energized and indoor (supply) fan motor stops.

Cooling, Unit Without Economizer —

38AUZ (Single Circuit)

On a thermostat call for Cooling, IFC will be energized and indoor (supply) fan motor runs. Thermostat output Y1 is energized; terminal Y1 at 38AUZ unit receives 24-v. 24-v received at CADM1 terminal Y. If anti-recycle time delay period has not expired, CADM1 relay will remain open, de-energizing Solenoid Valve Relay (SVR) and preventing compressor start. When safety pressure switches are closed and CADM1 time delay expires, CADM1 relay closes, SVR and compressor contactor C1 are energized; liquid line solenoid valve LLSV opens, all outdoor fan motors start and Compressor 1 starts.

On a thermostat calling for Stage 2 Cooling, thermostat output Y2 is energized; terminal Y2 at 38AUZ unit receives 24-v. 24-v received at CADM2 terminal Y. If anti-recycle time delay period has not expired, CADM2 relay will remain open, preventing Compressor 2 start. When safety pressure switches are closed and CADM2 time delay expires, CADM2 relay closes, compressor contactor C2 is energized; Compressor 2 starts.

As space cooling load is satisfied, thermostat outputs Y2 and Y1 are sequentially de-energized, removing 24-v at 38AUZ terminals Y2 and Y1. Compressor 2 stops on Y2 opening. CADM2 begins its three-minute anti-recycle time delay. On Y1 opening, Compressor 1 stops, all outdoor fan motors stop and SVR relay is de-energized. Liquid line solenoid valve is de-energized and valve closes. CADM1 begins its three-minute anti-recycle time delay.

38AUD (Two Circuit)

On a thermostat call for Cooling, IFC will be energized and indoor (supply) fan motor runs. Thermostat output Y1 is energized; terminal Y1 at 38AUD unit receives 24-v. 24-v received at CADM1 terminal Y. If anti-recycle time delay period has not expired, CADM1 relay will remain open, de-energizing Solenoid Valve Relay 1 (SVR1) and preventing compressor start. When safety pressure switches are closed and CADM1 time delay expires, CADM1 relay closes, SVR1 and compressor contactor C1 are energized; liquid line solenoid valve LLSV1 opens, all outdoor fan motors start and Circuit 1 compressor starts.

On a thermostat calling for Stage 2 Cooling, thermostat output Y2 is energized; terminal Y2 at 38AUD unit receives 24-v. 24-v received at CADM2 terminal Y. If anti-recycle time delay period has not expired, CADM2 relay will remain open, de-energizing Solenoid Valve Relay 2 (SVR2) and preventing compressor start. When safety pressure switches are closed and CADM2 time delay expires, CADM2 relay closes, SVR2 and compressor contactor C2 are energized; liquid line solenoid valve LLSV2 opens and Circuit 2 compressor starts.

As space cooling load is satisfied, thermostat outputs Y2 and Y1 are de-energized, removing 24-v at 38AUD terminals Y2 and Y1. Circuit 2 compressor stops on Y2 opening; SVR2 is de-energized and LLSV2 closes. CADM2 begins its three-minute anti-recycle time delay. On Y1 opening, Circuit 1 compressor stops, all outdoor fan motors stop and SVR1 relay is de-energized. Liquid line solenoid valve LLSV1 is de-energized and valve closes. CADM1 begins its three-minute anti-recycle time delay.

38AUDC12, Unit with Hot Gas Bypass (HGBP) —

Fig. 30 (on page 35) illustrates the factory-installed hot gas bypass (HGBP) option for 38AUD units. The HGBP is set at about 109 psig (752 kPa) (about 36°F (2°C) saturation temperature), to maintain the evaporator coil temperatures above 36°F (2°C). The liquid injection valve (TXV) is set at approximately 17°F (9°C) superheat. The valves on the HGBP option are preset at the factory, but may be adjusted in the field.

As the load on the indoor evaporator decreases, the suction pressure will decrease which is detected by the HGBP valve (constant pressure valve). When the suction pressure approaches 109 psig (752 kPa), the HGBP valve begins to open to allow hot gas from the compressor to bypass to the suction pipe in a controlled manner to attempt to maintain a constant suction pressure. Since hot gas is too hot for entering the compressor, the device includes a liquid injector (or TXV) which feeds a little refrigerant from the liquid line through the TXV to de-superheat the hot gas and maintain an acceptable refrigerant quality to not damage the compressor. When hot gas bypasses, it reduces the mass flow of refrigerant to the evaporator which reduces its capacity, and attempts to maintain the suction saturation temperature above 32°F (0°C) which minimizes the potential for freeze-up in the evaporator coil.

The HGBP solenoid valve, as indicated in the lower left of Fig. 30, allows HGBP control during first stage cooling operation.

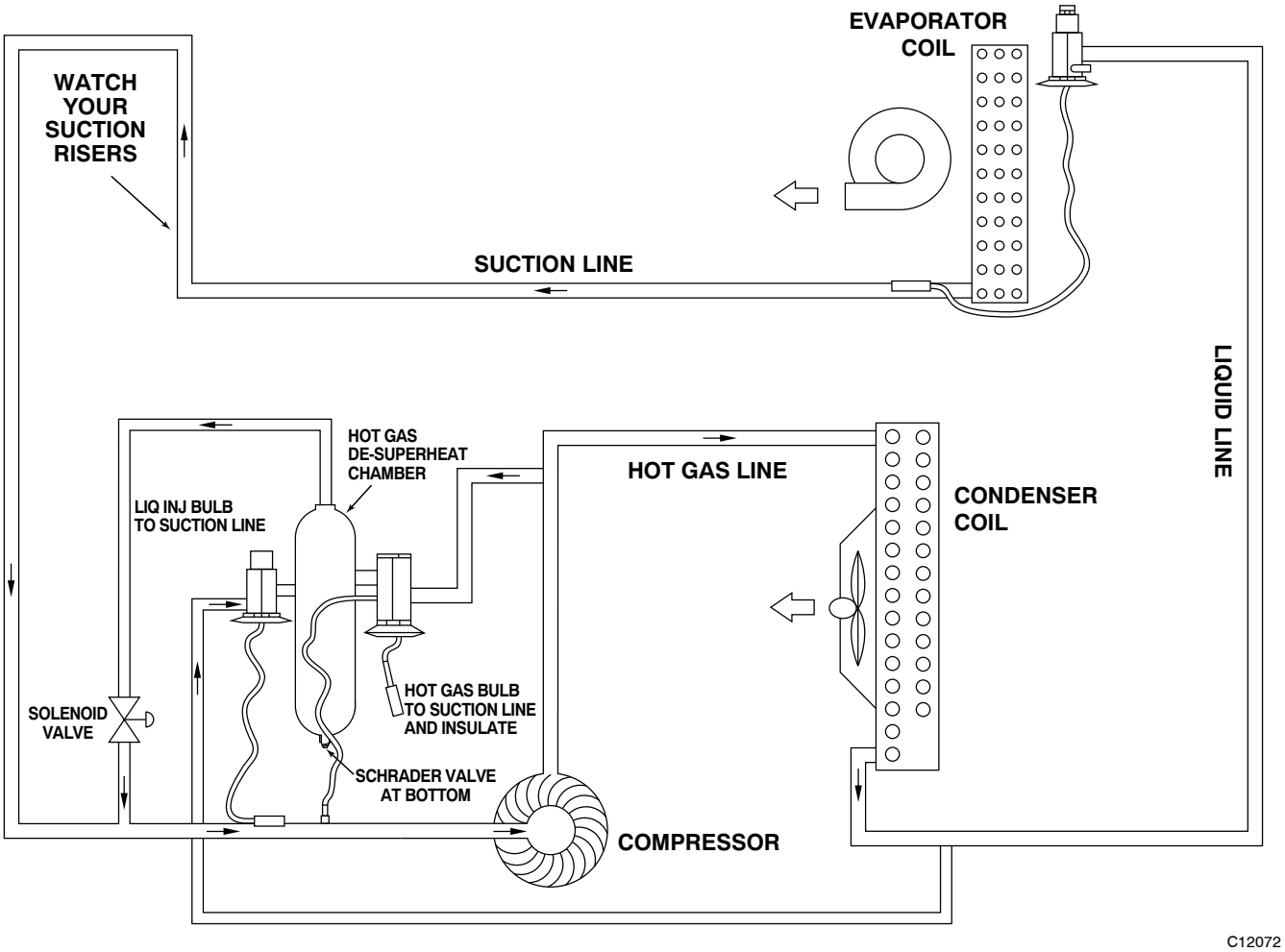

Fig. 30 - Hot Gas Bypass Option

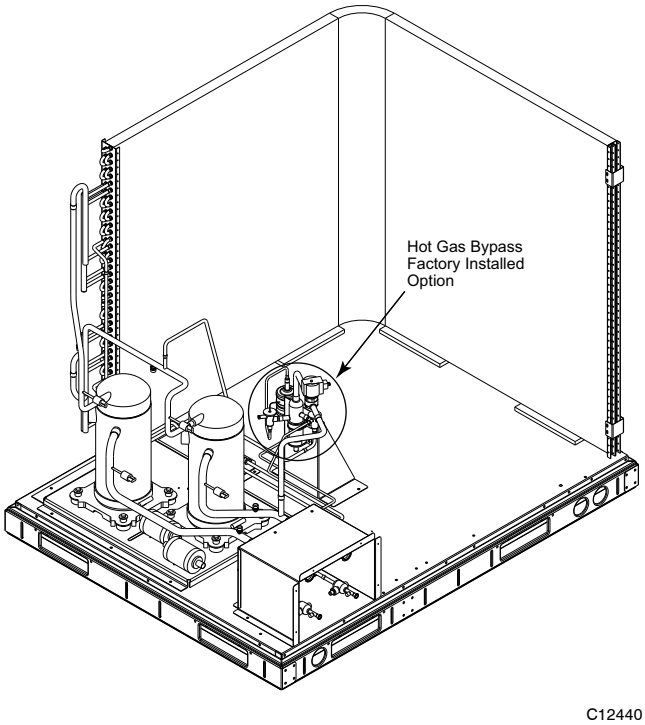

Fig. 31 - Location of Hot Gas Bypass in 38AUDC12

38AUDC with SVR Relays

With no thermostat demand, there will be no voltage at LVTB-A1; HGBP SOLENOID is de-energized and solenoid valve remains closed, preventing bypass vapor from the desuperheating tank to enter the suction line at the compressor.

On a thermostat call for first-stage cooling, LVTB terminal Y1 is powered; when CADM1 is satisfied, compressor contactor C1 and Solenoid Valve Relay SVR1 are energized. SVR1 contacts close, providing 24-v to LVTB terminal A1, then through HGBP RELAY NC contacts to HGBP SOLENOID. HGBP solenoid valve opens, allowing bypass vapor from the desuperheating tank to enter the compressor suction port.

If thermostat calls for second stage cooling, LVTB terminal Y2 is powered; when CADM2 is satisfied, compressor contactor C2, Solenoid Valve Relay SVR2 and HGBP RELAY are energized. HGBP RELAY NC contacts open, de-energizing the HGBP SOLENOID; solenoid valve closes, blocking bypass vapor from the desuperheating tank and unit runs at full cooling capacity.

The model 38AUDC also includes the 32LT Motormaster low ambient control as a standard feature. Refer to Appendix C for information on the Motormaster control.

All Units

If either the Low Pressure Switch or High Pressure Switch opens while thermostat output Y1 or Y2 remain energized, the compressor contactor is de-energized, the compressor stops and liquid line solenoid is de-energized (valve closes). CADM initiates a TRIP event (cooling demand sensed at CADM terminal Y but no current is measured at T1, T2, T3 motor sensors); CADM relay opens and RED LED is illuminated. TRIP condition maintains lockout of compressor operation until CADM is manually reset. Reset CADM by cycling unit main power.

Complete system shutdown may be caused by loss of main power, open compressor internal overload, open low-pressure or high-pressure switch, or a fault detected by the CADM logic. Compressor operation without cooling may indicate the compressor's ASTP feature is active; disconnect unit power and allow compressor to cool. See Service section for further details.

Cooling, Unit With Economizer —

Refer to fan coil unit installation instructions and economizer accessory installation instructions for operating sequences when system is equipped with accessory economizer.

Heating —

Refer to fan coil unit installation instructions and accessory heating device installation instructions for operating sequences in heating mode.

ROUTINE SYSTEM MAINTENANCE

These items should be part of a routine maintenance program, to be checked every month or two, until a specific schedule for each can be identified for this installation:

Quarterly Inspection (and 30 days after initial start) —

Indoor section

- Condenser coil cleanliness checked.
- Return air filter replacement
- Outdoor hood inlet filters cleaned
- Belt tension checked
- Belt condition checked
- Pulley alignment checked
- Fan shaft bearing locking collar tightness checked
- Condensate drain checked

Seasonal Maintenance —

These items should be checked at the beginning of each season (or more often if local conditions and usage patterns dictate):

Air Conditioning

- Condenser fan motor mounting bolts tightness
- Compressor mounting bolts
- Condenser fan blade positioning
- Control box cleanliness and wiring condition
- Wire terminal tightness
- Refrigerant charge level
- Evaporator coil cleaning
- Evaporator blower motor amperage

Heating

- Power wire connections
- Fuses ready
- Manual-reset limit switch is closed

Economizer or Outside Air Damper

- Inlet filters condition
- Check damper travel (economizer)
- Check gear and dampers for debris and dirt

SERVICE

Refrigeration System

⚠ CAUTION

EQUIPMENT DAMAGE HAZARD

Failure to follow this caution may result in damage to equipment.

This system uses Puron® refrigerant which has higher pressures than R-22 and other refrigerants. No other refrigerant may be used in this system. Gage set, hoses, and recovery system must be designed to handle Puron. If you are unsure consult the equipment manufacturer.

Compressor Oil —

⚠ CAUTION

EQUIPMENT DAMAGE HAZARD

Failure to follow this caution may result in damage to equipment.

The compressor in a Puron system uses a polyolester (POE) oil. This oil is extremely hygroscopic, meaning it absorbs water readily. POE oils can absorb 15 times as much water as other oils designed for HCFC and CFC refrigerants. Take all necessary precautions to avoid exposure of the oil to the atmosphere.

Servicing Systems on Roofs With Synthetic Materials —

POE (polyolester) compressor lubricants are known to cause long term damage to some synthetic roofing materials. Exposure, even if immediately cleaned up, may cause embrittlement (leading to cracking) to occur in one year or more. When performing any service which may risk exposure of compressor oil to the roof, take appropriate

precautions to protect roofing. Procedures which risk oil leakage include but are not limited to compressor replacement, repairing refrigerants leaks, replacing refrigerant components such as filter drier, pressure switch, metering device, coil, accumulator, or reversing valve.

Synthetic Roof Precautionary Procedure:

1. Cover extended roof working area with an impermeable polyethylene (plastic) drop cloth or tarp. Cover an approximate 10 x 10 ft (3.3 x 3.3 m) area.
2. Cover area in front of the unit service panel with a terry cloth shop towel to absorb lubricant spills and prevent run-offs, and protect drop cloth from tears caused by tools or components.
3. Place terry cloth shop towel inside unit immediately under component(s) to be serviced and prevent lubricant run-offs through the louvered openings in the base pan.
4. Perform required service.
5. Remove and dispose of any oil contaminated material per local codes.

Liquid Line Filter Drier —

The factory-provided filter drier is specifically designed to operate with Puron®. Replace the filter drier with factory-authorized components only with a filter drier with desiccant made from 100% molecular sieve grade XH-11. Filter drier must be replaced whenever the refrigerant system is opened.

When removing a filter drier, use a tubing cutter to cut the drier from the system. **Do not unsweat a filter drier** from the system. Heat from unsweating will release moisture and contaminants from drier into system.

Field Refrigerant Access Ports —

Field service access to refrigerant pressures is through the access ports located at the service valves (see Figs 35 and 37). These ports are $^1/_4$-in SAE Flare couplings with Schrader check valves and service caps. Use these ports to admit nitrogen to the field tubing during brazing, to evacuate the tubing and evaporator coil, to admit initial refrigerant charge into the low-side of the system and when checking and adjusting the system refrigerant charge. When service activities are completed, ensure the service caps are in place and secure; check for leaks. If the Schrader check valve must be removed and re-installed, tighten to 2-3 in-lbs (23-34 N-cm).

Factory High-Flow Access Ports —

There are two additional access ports in the system - on the suction tube between the compressor and the suction service valve and on the liquid tube near the liquid service valve (see Figs 36 and 38). These are brass fittings with black plastic caps. The hose connection fittings are standard $^1/_4$-in SAE Male Flare couplings.

The brass fittings are two-piece High Flow valves, with a receptacle base brazed to the tubing and an integral spring-closed check valve core screwed into the base. (See Fig. 32) This check valve is permanently assembled into this core body and cannot be serviced separately; replace the entire core body if necessary. Service tools are available from RCD that allow the replacement of the check valve core without having to recover the entire system refrigerant charge. Apply compressor refrigerant oil to the check valve core's bottom o-ring. Install the fitting body with 96 ±-10 in-lbs (1085 ±23 N-cm) of torque; do not overtighten.

Hot Gas Bypass Valve Adjustments —

Refer to Fig. 30 for a unit piping schematic with factory option Hot Gas Bypass control.

The suction pressure regulating valve is located between the unit's compressor discharge line and the desuperheating tank. A suction pressure tube is connected between the regulating valves and the unit suction line. This valve is factory set to begin to open as suction pressure drops below 109 psig (752 kPa). This valve can be adjusted by removing the cover bolt on the valve to expose the Allen key socket. One turn of this stem provides a 5 psig (34 kPa) change in valve opening setting. CW turn reduces the opening setting. CCW turn increases the opening setting. MAXIMUM CCW adjustment is one turn.

The factory setting is designed to provide a longer run time during first stage cooling operation by beginning to open at approximately 36°F (2°C) evaporator saturated suction temperature as space load approaches satisfaction. This extended run time will provide additional dehumidification effect.

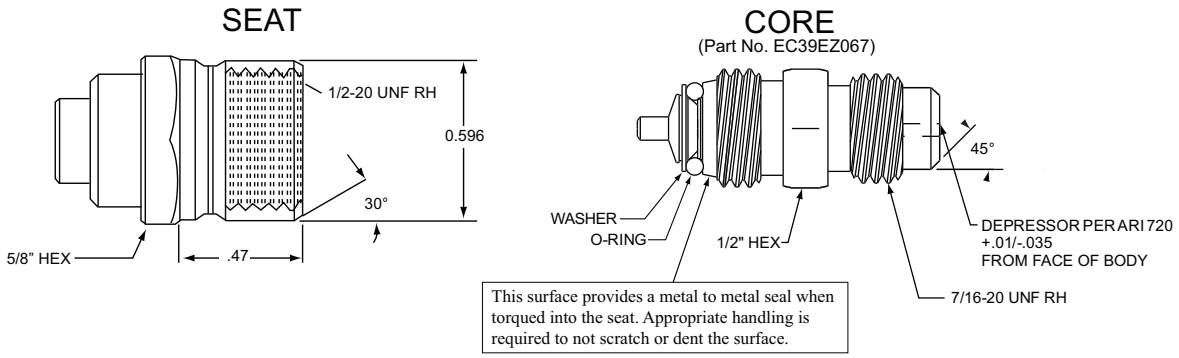

Fig. 32 - CoreMax Access Port Assembly

Comfort Alert Diagnostic Module

The Comfort Alert Diagnostic Module (CADM) monitors and analyzes data from the Copeland Scroll® three-phase compressor and the thermostat demand. The CADM also provides a 3-minute anti-recycle time delay to compressor cycling. Each compressor has a separate CADM module.

The CADM detects causes for electrical and system related failures without any sensors. Flashing LEDs communicate the Alert codes to guide service technicians in accurately and quickly troubleshooting the system and determining root cause for the failure.

Inputs to the CADM include 24-vac power, thermostat Y1 or Y2, compressor contactor coil (common side) and compressor power leads (from the compressor contactor).

Input	Terminal	Voltage
Control Power	R	24-V
Control Common	C	24-V
Cooling	Y	24-V
Contactor Coil	P	24-V
Line A	T1	Line
Line B	T2	Line
Line C	T3	Line

Control of the compressor contactor coil is through a normally-closed (power on the module) contact between terminals P and C.

Communications of status and alert conditions is through three LEDs located on the top edge of the module housing (see Fig. 33): POWER (green), ALERT (yellow), and TRIP (red).

The POWER LED indicates the presence of control power to the CADM.

The ALERT LED indicates an abnormal condition exists in the system through a flash code. The ALERT LED will blink a number of times consecutively, pause and the repeat the process. The number of blinks, defined in Table 13, correlates to a particular abnormal condition; troubleshooting tips are provided for each Alert code. Reset of the ALERT may be automatic or manual. If the fault condition causing the Alert is self-corrected, the Alert code will be removed and the CADM will automatically reset and allow the system to restart normally. Manual reset requires that main power to the 38AU unit be recycled after the cause for the Alert condition has been detected and corrected.

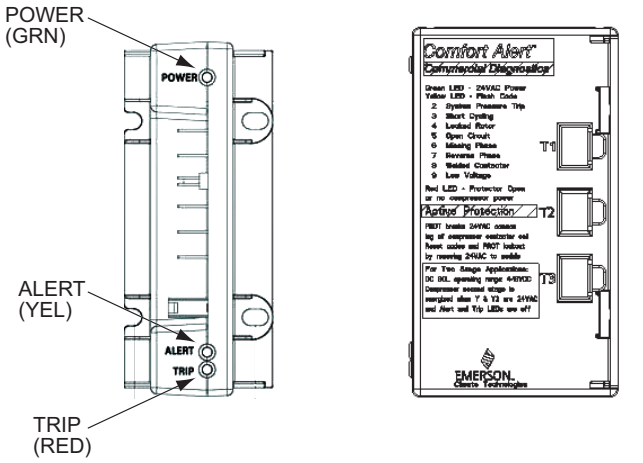

Fig. 33 - CADM Housing/LED Locations

The TRIP LED indicates either a time-delay period is currently active (RED LED is blinking) or the module has locked out the compressor (RED LED is on steady). A lockout condition will occur when the CADM detects a thermostat demand at input Y but there is no power at the compressor line terminals T1 or T2 or T3. This lockout can occur due to a safety switch (LPS or HPS) opening and de-energizing the compressor contactor, the compressor-motor internal overload opens, or other internal power interruption has occurred. Reset of the TRIP LED requires that unit main power be recycled after the loss of power to the compressor condition has been detected and corrected.

Simultaneous Blinking of YELLOW and RED LEDs indicates control power input to the CADM is low. Check control circuit transformer and wiring.

Troubleshooting the CADM Wiring – Flashing LEDs also indicate wiring problems to the CADM. See Table 14 for discussion of additional LED flash codes and troubleshooting instructions.

Table 13 – LED Status Codes

Status LED	Status LED Description	Status LED Troubleshooting Information
Green “POWER”	Module has power	Supply voltage is present at module terminals
Red “TRIP” LED On Solid	Thermostat demand signal Y is present, but the compressor is not running.	1. Compressor protector is open 2. Condensing unit power disconnect is open 3. Compressor circuit breaker or fuse(s) is open 4. Broken supply wires or connector is not making contact 5. Compressor power wires not routed through Comfort Alert 6. Compressor contactor has failed open
Red “TRIP” LED Flashing	The anti-short cycle timer (3 minutes) in module is preventing compressor restart.	
Module locks out compressor when compressor damaging ALERT code appears. Lockout ALERT codes are noted in the Status LED Description. During a compressor lock out, 24VAC power must be removed from module to manually reset.		
Yellow “ALERT” LED On Solid	A short circuit or over current condition exists on PROT terminal.	1. Compressor contactor coil shorted 2. Electrical load too high for PROT circuit (maximum 1 Amp) 3. 24 V AC wired directly to PROT terminal
Yellow “ALERT” Flash Code 2	System Pressure Trip Discharge pressure out of limits LOCKOUT	1. High head pressure 2. Condenser coil poor air circulation (dirty, blocked, damaged) 3. Condenser fan is not running 4. If low pressure switch is open: a. Low refrigerant charge b. Evaporator blower is not running c. Evaporator coil is frozen d. Faulty metering device e. Condenser coil is dirty\ f. Liquid line restriction (filter drier blocked if present)
Yellow “ALERT” Flash Code 3	Short Cycling Compressor is running only briefly (four consecutive cycles of less than three minutes each) LOCKOUT	1. Loose connection between thermostat Y1 and CADM Y terminal. 2. Unit short–cycling on thermostat 3. System or control board defective
Yellow “ALERT” Flash Code 4	Locked Rotor LOCKOUT	1. Low line voltage to compressor 2. Excessive liquid refrigerant in compressor 3. Compressor bearings are seized
Yellow “ALERT” Flash Code 5	Open Circuit	1. Condensing unit power disconnect is open 2. Compressor circuit breaker or fuses are open 3. Compressor contactor has failed open 4. High pressure switch is open and requires manual reset 5. Broken supply wires or connector is not making contact 6. Unusually long compressor protector reset time due to extreme ambient temperature 7. Compressor windings are damaged
Yellow “ALERT” Flash Code 6	Missing Phase LOCKOUT	1. Compressor fuse is open on one phase 2. Broken wire or connector on one phase 3. Compressor motor winding is damaged 4. Utility supply has dropped one phase
Yellow “ALERT” Flash Code 7	Reverse Phase LOCKOUT	1. Compressor running backward due to supply phase reversal
Yellow “ALERT” Flash Code 8	Welded Contactor Compressor always runs	1. Compressor contactor has failed closed 2. Thermostat demand signal not connected to module
Yellow “ALERT” Flash Code 9	Low Voltage Control circuit < 18VAC	1. Control circuit transformer is overloaded 2. Low line voltage to compressor

Table 14 – CADM Troubleshooting

Miswired Module Indication	Recommended Troubleshooting Action
Green LED is not on, module does not power up	Determine if both R and C module terminals are connected. Verify voltage in present at module's R and C terminals. **NOTE:** The CADM requires a constant nominal 24VAC power supply. The wiring to the module's R and C terminals must be directly from the control transformer. The module cannot receive its power from another device that will interrupt the 24VAC power supply. See the 38AU Wiring Diagram(s) (Fig. 28 and Fig. 29).
Green LED Intermittent, module powers up only when compressor runs	Determine if R and Y terminals are wired in reverse. Verify module's R and C terminals have a constant source. See "**NOTE**" above for details on R and C wiring.
TRIP LED is on but system and compressor check OK	Verify Y terminal is wired properly per the 38AU wiring diagram (see Fig. 28 and Fig. 29). Verify voltage at contactor coil falls below 0.5VAC when off. Verify 24VAQC is present across Y and C when thermostat demand signal is present. If not, R and C are reverse wired.
TRIP LED and ALERT LED flashing together	Verify R and C terminals are supplied with 19-28VAC.
ALERT Flash Code 3 (Compressor Short Cycling) displayed incorrectly	Verify Y terminal is connected to 24VAC at contactor coil. Verify voltage at contactor coil falls below 0.5VAC when off.
ALERT Flash Code 5 or 6 (Open Circuit, Missing Phase) displayed incorrectly	Check that compressor T1 and T3 wires are through module's current sensing holes. Verify Y terminal is connected to 24VAC at contactor coil. Verify voltage at contactor coil falls below 0.5VAC when off.
Alert Flash Code * (Welded Contactor) displayed incorrectly	Determine if module's Y terminal is connected. Verify Y terminal is connected to 24VAC at contactor coil. Verify 24VAC is present across Y and C when thermostat demand signal is present. If not, R and C are reverse wired. Verify voltage at contactor coil falls below 0.5VAC when off.

Compressor Protection

Compressor Overtemperature Protection (IP) —

A thermostat installed on the compressor motor winding reacts to excessively high winding temperatures and shuts off the compressor.

Crankcase Heater —

The heater minimizes absorption of liquid refrigerant by oil in the crankcase during brief or extended shutdown periods. The heater is wired to cycle with the compressor; the heater is off when compressor is running, and on when compressor is off.

The crankcase heater will operate as long as the power circuit is energized. The main disconnect must be on to energize the crankcase heater.

> **IMPORTANT:** Never open any switch or disconnect that energizes the crankcase heater unless unit is being serviced or is to be shut down for a prolonged period. After a prolonged shutdown on a service job, energize the crankcase heater for 24 hours before starting the compressor.

Advanced Scroll Temperature Protection (ASTP) —

See "Advanced Scroll Temperature Protection (ASTP)" on page 27.

Low-Pressure Switch —

The 38AU low-pressure switch is stem-mounted on the suction line. Switches are all fixed, non-adjustable type.

High-Pressure Switch —

The high-pressure switch is stem mounted on the discharge line. The switch is a fixed, non-adjustable type.

Outdoor Fans —

Each fan is supported by a formed-wire mount bolted to the fan deck and covered with a wire guard. Fan motors have permanently lubricated bearings.

1. Shut off unit power supply. Install lockout tag.
2. Remove outdoor fan assembly (grille, motor, and fan).
3. Loosen fan hub setscrews.
4. Adjust fan height as shown in Fig. 34.
5. Tighten setscrews to 84 in-lbs (949 N-cm).
6. Replace outdoor fan assembly.

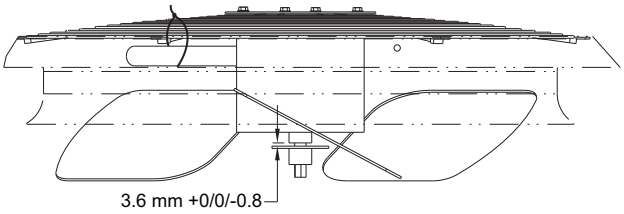

C10103

Fig. 34 - Outdoor Fan Blade Position

Lubrication —

Fan Motors: The fan motors have sealed bearings. No provisions are made for lubrication.

Compressor: The compressor has its own oil supply. Loss of oil due to a leak in the system should be the only reason for adding oil after the system has been in operation.

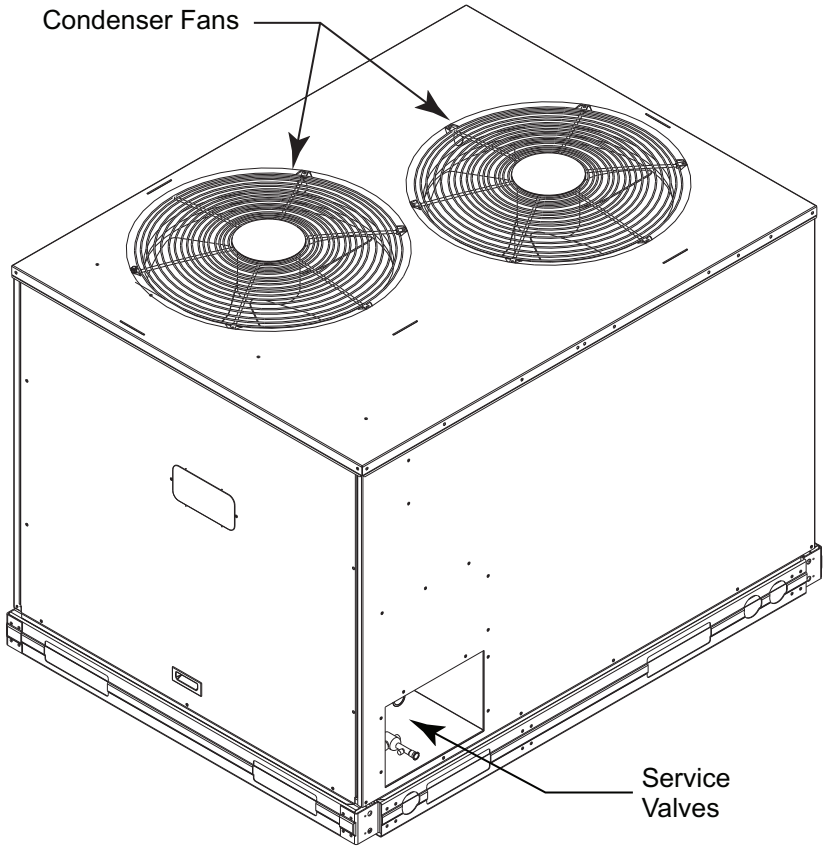

C10927

Fig. 35 - Typical Exterior, Single-Circuit Unit (38AUZ*08 shown)

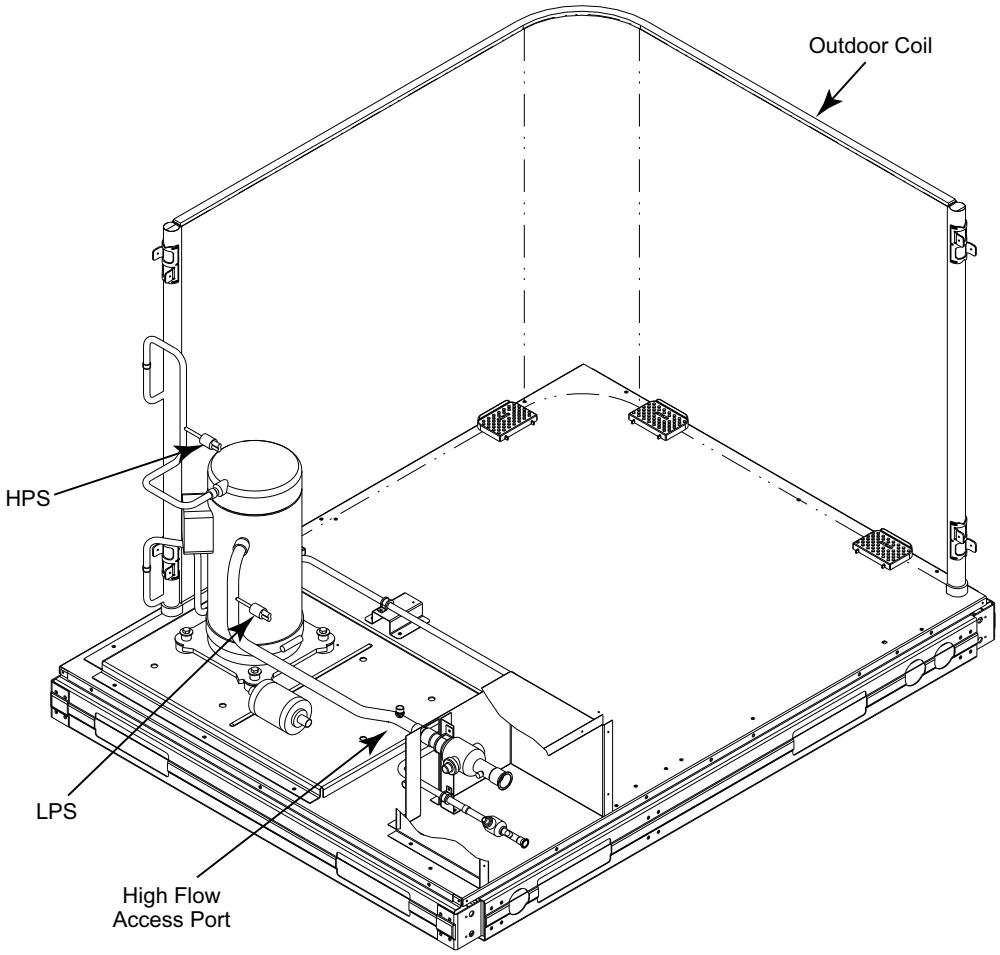

C150029

Fig. 36 - Typical Interior, Single-Circuit Unit (38AUZ*08 shown)

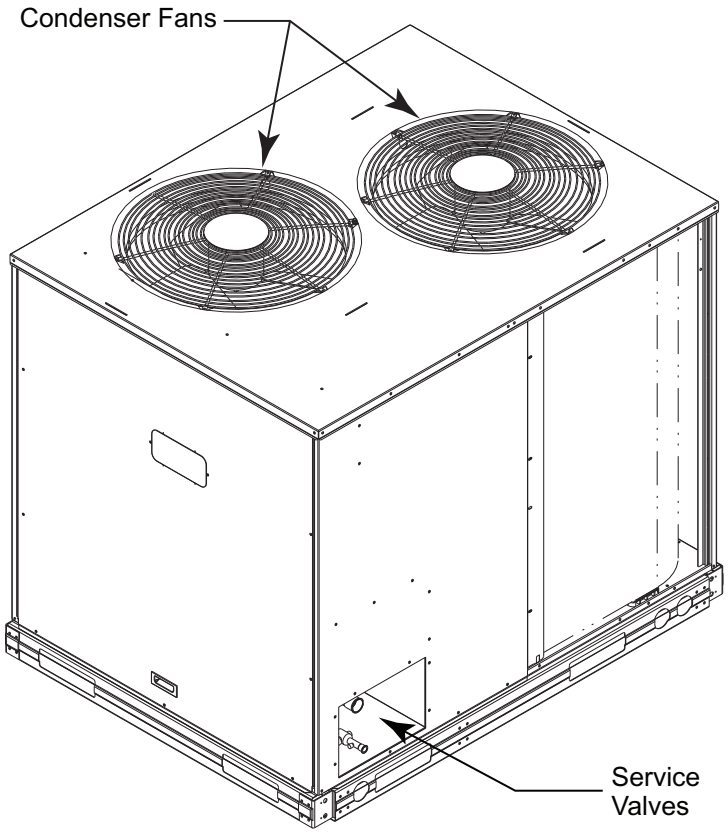

C10929

Fig. 37 - Typical Exterior, Two-Circuit Unit (38AUD*14 shown)

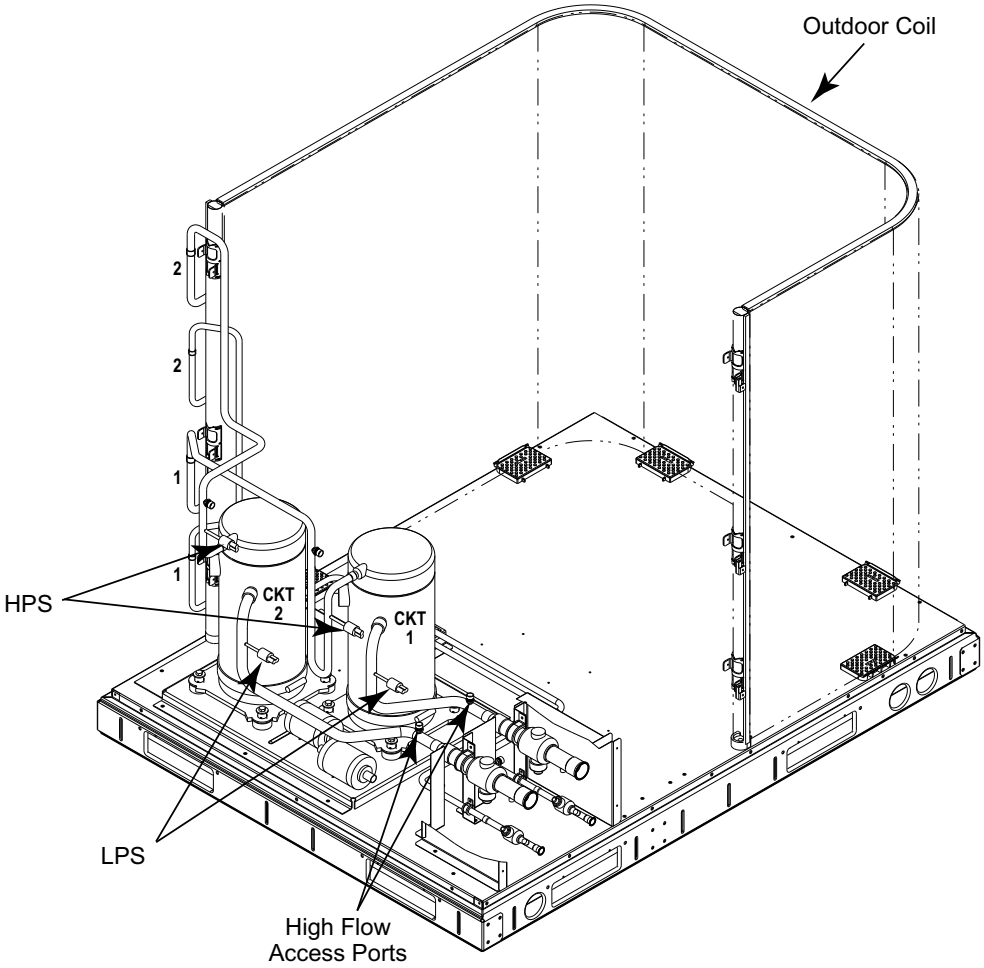

C150030

Fig. 38 - Typical Interior, Two-Circuit Unit (38AUD*14 shown)

Routine Cleaning of Round-Tube Plate Fin (RTPF) Coils —

Periodic cleaning with Totaline® environmentally sound coil cleaner is essential to extend the life of RTPF coils. This cleaner is available from Carrier Replacement parts division as part number P902-0301 for a one gallon container, and part number P902-0305 for a 5 gallon container. It is recommended that all RTPF coils be cleaned with the Totaline environmentally sound coil cleaner as described below.

Coil cleaning should be part of the unit's regularly scheduled maintenance procedures to ensure long life of the coil. Failure to clean the coils may result in reduced durability in the environment.

Avoid the use of:

- coil brighteners
- acid cleaning prior to painting
- high pressure washers
- poor quality water for cleaning

Totaline environmentally sound coil cleaner is non-flammable, hypoallergenic, non-bacterial, and a USDA accepted biodegradable agent that will not harm the coil or surrounding components such as electrical wiring, painted metal surfaces, or insulation. Use of non-recommended coil cleaners is strongly discouraged since coil and unit durability could be affected.

Totaline Environmentally Sound Coil Cleaner Application Equipment —

- $2^1/_2$ gallon garden sprayer
- water rinse with low velocity spray nozzle

⚠ CAUTION

UNIT DAMAGE HAZARD

Failure to follow this caution may result in corrosion and damage to the unit.

Harsh chemicals, household bleach or acid or basic cleaners should not be used to clean outdoor or indoor coils or any kind. These cleaners can be very difficult to rinse out of the coil and can accelerate corrosion at the fin/tube interface where dissimilar materials are in contact. If there is dirt below the surface of the coil use the Totaline environmentally sound coil cleaner as described above.

⚠ CAUTION

UNIT RELIABILITY HAZARD

Failure to follow this caution may result in reduced unit performance.

High velocity water from a pressure washer, garden hose, or compressed air should never be used to clean a coil. The force of the water or air jet will bend the fin edges and increase airside pressure drop.

Totaline Environmentally Sound Coil Cleaner Application Instructions:

NOTE: Proper eye protection such as safety glasses is recommended during mixing and application.

1. Turn off unit power.
2. Remove screws holding rear corner post and top cover in place. Pivot top cover up 12 to 18 inches (305 to 457 mm) and support with a rigid support. See Fig. 39.

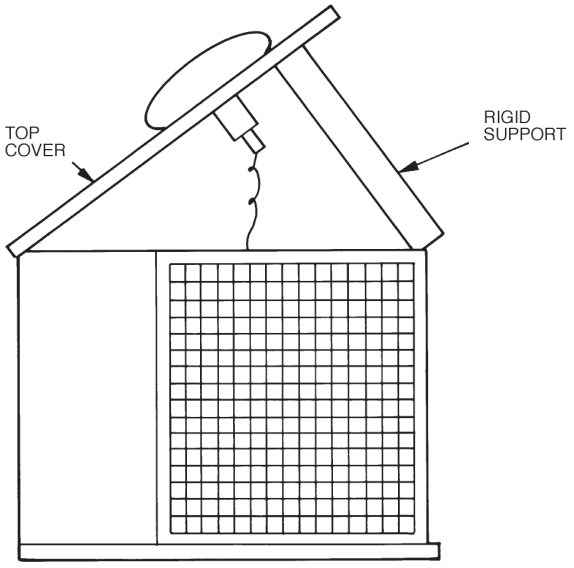

Fig. 39 - Pivot and Support Top Cover

3. Remove all surface loaded fibers and dirt with a vacuum cleaner. If a vacuum cleaner is not available, a soft non-metallic bristle brush may be used. In either case, the tool should be applied in the direction of the fins. Coil surfaces can be easily damaged (fin edges can be easily bent over and damage to the coating of a protected coil) if the tool is applied across the fins.

NOTE: Use of a water stream, such as a garden hose, against surface loaded coil will drive the fibers and dirt into the coil, making cleaning efforts more difficult. Surface loaded fibers must be completely removed prior to using low velocity clean water rinse.

4. Using a low velocity garden hose thoroughly wet finned surfaces with clean water. Be careful not to bend the fins.
5. Mix Totaline environmentally sound coil cleaner in a $2^1/_2$ gallon garden sprayer according to the instructions included with the cleaner. The optimum solution temperature is 100°F (38°C).

NOTE: Do NOT USE water in excess of 130°F (54°C), as the enzymatic activity will be destroyed.

6. Thoroughly apply Totaline® environmentally sound coil cleaner solution to all coil surfaces including the finned area, tube sheets and coil headers.
7. Hold garden sprayer nozzle close to finned areas and apply cleaner with a vertical, up-and-down motion. Avoid spraying in horizontal pattern to minimize potential for fin damage.
8. Ensure cleaner thoroughly penetrates deep into finned areas.
9. Interior and exterior finned areas must be thoroughly cleaned.
10. Finned surfaces should remain wet with cleaning solution for 10 minutes.
11. Ensure surfaces are not allowed to dry before rinsing. Reapply cleaner as needed to ensure 10-minute saturation is achieved.
12. Thoroughly rinse all surfaces with low velocity clean water using downward rinsing motion of water spray nozzle. Protect fins from damage from the spray nozzle.
13. Replace top cover and rear corner posts.

FASTENER TORQUE VALUES

Table 15 – Torque Values

Compressor mounting bolts	65–75 in–lbs (734–847 N–cm)
Condenser fan motor mounting bolts	20 ±2 in–lbs (226 ±23 N–cm)
Condenser fan hub setscrew	84 ±2 in–lbs (949 ±136 N–cm)
High-flow service port	96 ±10 in–lbs (1085 ±23 N–cm)
Schrader-type service check valve	2–3 in–lbs (23–34 N–cm)
Compressor oil sightglass thread	330 ±31 in–lbs (23–34 N–cm)
Compressor to Compressor rail torque	120–168 in–lbs (1356–1898 N–cm)
Compressor rail to base pan torque	70 ±5 in–lbs (791 ±57 N–cm)

TROUBLESHOOTING

PROBLEM	SOLUTION
COMPRESSOR DOES NOT RUN	
Contactor Open	
1. Power off.	1. Restore power.
2. Fuses blown in field power circuit.	2. After finding cause and correcting, replace with correct size fuse.
3. No control power.	3. Check control transformer primary connections and circuit breaker.
4. Thermostat circuit open.	4. Check thermostat setting.
5. Safety device lockout circuit active.	5. Reset lockout circuit.
6. Low-pressure switch open.	6. Check for refrigerant undercharge, obstruction of indoor airflow. Make sure liquid line solenoid valve(s) is open.
7. High-pressure switch open.	7. Check for refrigerant overcharge, obstruction of outdoor airflow, air in system. Be sure outdoor fans are operating correctly.
8. Compressor overtemperature switch open.	8. Check for open condition. Allow for reset. Replace compressor if necessary.
9. Loose electrical connections.	9. Tighten all connections.
10. Compressor stuck.	10. See compressor service literature.
Contactor Closed	
1. Compressor leads loose.	1. Check connections.
2. Motor windings open.	2. See compressor service literature.
3. Single phasing.	3. Check for blown fuse. Check for loose connection at compressor terminal.
COMPRESSOR STOPS ON HIGH-PRESSURE SWITCH	
Outdoor Fan On	
1. High-pressure switch faulty.	1. Replace switch.
2. Reversed fan rotation.	2. Confirm rotation, correct if necessary.
3. Airflow restricted.	3. Remove obstruction.
4. Air recirculating.	4. Clear airflow area.
5. Noncondensables in system.	5. Recover refrigerant and recharge as required.
6. Refrigerant overcharge.	6. Recover refrigerant as required.
7. Line voltage incorrect.	7. Consult power company.
8. Refrigerant system restrictions.	8. Check or replace filter drier, expansion valve, etc.
Outdoor Fan Off	
1. Fan slips on shaft.	1. Tighten fan hub setscrews.
2. Motor not running.	2. Check power and capacitor.
3. Motor bearings stuck.	3. Replace bearings.
4. Motor overload open.	4. Check overload rating. Check for fan blade obstruction.
5. Motor burned out.	5. Replace motor.

TROUBLESHOOTING (cont)

PROBLEM	SOLUTION
COMPRESSOR CYCLES ON LOW-PRESSURE SWITCH	
Indoor-Air Fan Running	
1. Liquid line solenoid valve(s) fails to open.	1. Check liquid line solenoid valve(s) for proper operation. Replace if necessary.
2. Filter drier plugged.	2. Replace filter drier.
3. Expansion valve power head defective.	3. Replace power head.
4. Low refrigerant charge.	4. Add charge. Check low-pressure switch setting.
Airflow Restricted	
1. Coil iced up.	1. Check refrigerant charge.
2. Coil dirty.	2. Clean coil fins.
3. Air filters dirty.	3. Clean or replace filters.
4. Dampers closed.	4. Check damper operation and position.
Indoor-Air Fan Stopped	
1. Electrical connections loose.	1. Tighten all connections.
2. Fan relay defective.	2. Replace relay.
3. Motor overload open.	3. Power supply.
4. Motor defective.	4. Replace motor.
5. Fan belt broken or slipping.	5. Replace or tighten belt.
COMPRESSOR RUNNING BUT COOLING INSUFFICIENT	
Suction Pressure Low	
1. Refrigerant charge low.	1. Add refrigerant.
2. Head pressure low.	2. Check refrigerant charge. Check outdoor-air fan thermostat settings.
3. Air filters dirty.	3. Clean or replace filters.
4. Expansion valve power head defective.	4. Replace power head.
5. Indoor coil partially iced.	5. Check low-pressure setting.
6. Indoor airflow restricted.	6. Remove obstruction.
Suction Pressure High	
1. Heat load excessive.	1. Check for open doors or windows in vicinity of fan coil.
UNIT OPERATES TOO LONG OR CONTINUOUSLY	
1. Low refrigerant charge.	1. Add refrigerant.
2. Control contacts fused.	2. Replace control.
3. Air in system.	3. Purge and evacuate system.
4. Partially plugged expansion valve or filter drier.	4. Clean or replace.
SYSTEM IS NOISY	
1. Piping vibration.	1. Support piping as required.
2. Compressor noisy.	2. Replace compressor if bearings are worn.
COMPRESSOR LOSES OIL	
1. Leak in system.	1. Repair leak.
2. Crankcase heaters not energized during shutdown.	2. Check wiring and relays. Check heater and replace if defective.
3. Improper interconnecting piping design.	3. Check piping for oil return. Replace if necessary.
FROSTED SUCTION LINE	
Expansion valve admitting excess refrigerant.	Adjust expansion valve.
HOT LIQUID LINE	
1. Shortage of refrigerant due to leak.	1. Repair leak and recharge.
2. Expansion valve opens too wide.	2. Adjust expansion valve.
FROSTED LIQUID LINE	
1. Restricted filter drier.	1. Remove restriction or replace.
2. Liquid line solenoid valve partially closed.	2. Replace valve.

APPENDIX A

Air Conditioner & Heat Pump with PURON® — Quick Reference Guide

- Puron® (R-410A) refrigerant operates at 50 percent to 70 percent higher pressures than R-22. Be sure that servicing equipment and replacement components are designed to operate with Puron®.
- Puron® refrigerant cylinders are rose colored.
- Recovery cylinder service pressure rating must be 400 psig, DOT 4BA400 or DOT BW400.
- Puron® systems should be charged with liquid refrigerant. Use a commercial type metering device in the manifold hose when charging into suction line with compressor operating.
- Manifold sets should be 700 psig high side and 180 psig low side with 550 psig low-side retard.
- Use hoses with 700 psig service pressure rating.
- Leak detectors should be designed to detect HFC refrigerant.
- Puron®, as with other HFCs, is only compatible with POE oils.
- Vacuum pumps will not remove moisture from oil.
- Use only factory specified liquid-line filter driers with rated working pressures greater than 600 psig.
- Do not install a suction-line filter drier in liquid-line.
- POE oils absorb moisture rapidly. Do not expose oil to atmosphere.
- POE oils may cause damage to certain plastics and roofing materials.
- Wrap all filter driers and service valves with wet cloth when brazing.
- A factory approved, liquid-line filter drier is required on every unit.
- Do not use an R-22 TXV.
- If indoor unit is equipped with a TXV, it must be changed to a Puron® TXV.
- Never open system to atmosphere while it is under a vacuum.
- When system must be opened for service, recover refrigerant, break vacuum with dry nitrogen before opening system.
- Always replace filter drier after opening system for service.
- Do not vent Puron® into the atmosphere.
- Do not use capillary tube coils.
- Observe all **warnings**, **cautions**, and **bold** text.
- All Puron® heat pumps must have indoor TXV.
- Do not leave Puron® suction line driers in place for more than 72 hours.

APPENDIX B

Wiring Diagram List

38AU Size	Electrical Characteristics	Diagram Number
Z*07	208/230–3–60	38AU500320
	460–3–60	38AU500432
	575–3–60	38AU500337
Z*08	208/230–3–60	38AU500320
	460–3–60	38AU500432
	575–3–60	38AU500337
Z*12	208/230–3–60	38AU500320
	460–3–60	38AU500432
	575–3–60	38AU500337
Z*14	208/230–3–60	38AU500107
	460–3–60	38AU500432
	575–3–60	38AU500337
D*12	208/230–3–60	38AU500562
	460–3–60	38AU500563
	575–3–60	38AU500564
D*14	208/230–3–60	38AU500562
	460–3–60	38AU500563
	575–3–60	38AU500564

APPENDIX C

Low Ambient Option — Factory Installed

Units with the factory installed low ambient option are equipped with a Motormaster® solid-state head pressure control which regulates fan speed. A temperature sensor, mounted on either circuit 1 (38AUZ units) or circuit 2 (38AUD units) of the outdoor coil controls the speed of approved outdoor fan motors in order to maintain a constant head pressure in the outdoor coil (see Fig. 40 and Fig. 41). The control maintains the appropriate head pressure at low ambient temperatures down to -20°F (-28°C).

Wind baffles are required to prevent wind cross currents from causing abnormally low condensing temperatures.

Use 20-gauge sheet metal to fabricate wind baffles (see Fig. 42 and Table 16).

Operation —

Fan on/off control in cooling-only units (38AUZ, 38AUD) is provided by an outdoor fan relay (OFR).

In cooling mode, fan motor speed of outdoor motors OFM1 and OFM3 is regulated by the speed control temperature sensor on outdoor coil 1 for a minimum coil condensing temperature of approximately 100°F (38°C) at higher outdoor ambient temperature and 80°F (27°C) at lower ambient. Additionally, outdoor fan motor OFM2 and OFM4 are turned on/off by the low ambient temperature switch, LAS, operating the low ambient relay (LAR). The LAS control temperatures are open 42°F +/- 5°F, close 57°F +/- 5°F (open 5.5°C +/- 2.8°C, close 13.9°C +/- 2.8°C).

To override the speed control for full fan speed operation during service or maintenance, either:

a. remove sensor and place in hot water >120°F (>49°C), or
b. rewire to bypass control by connecting speed control input and output power wires.

Troubleshooting —

OBSERVATION	POSSIBLE REMEDY
Fans won't start	All fans: Check power & wiring Check outdoor fan relay (OFR) OFM1, OFM3 only: Check speed control sensor location Check speed sensor resistance OFM2, OFM4 only: Check low ambient switch (LAS) Check low ambient relay (LAR)
Cooling – Center outdoor fans (OFM2, OFM4) off below approximately 60°F (16°C) outdoor ambient.	Normal operation
Cooling – Center outdoor fans (OFM2, OFM4) not on above approximately 60°F (16°C) outdoor ambient	Check low ambient switch (LAS) Check low ambient relay (LAR)
Cooling – Slow fan speed for outer fans (OFM1, OFM3) at start or during low outdoor ambient	Normal operation
Cooling – Slow fan speed for outer fans (OFM1, OFM3) above 85°F (29°F) outdoor ambient (should be full speed)	Check speed control sensor location Check speed control sensor resistance Check fan motor capacitor
Cooling – motor current into speed control is greater than motor name-plate FLA	Normal operation Up to 30% higher A at partial speed at low ambient

Speed Control Sensor Resistance —

TEMPERATURE		RESISTANCE
°F +/–2°F°	°C +/–1C	Ohms, nominal
–22	–30	88350
–4	–20	48485
14	–10	27650
32	0	16325
50	10	9950
68	20	6245
77	25	5000
86	30	4028
104	40	2663
122	50	1801
140	60	1244
158	70	876

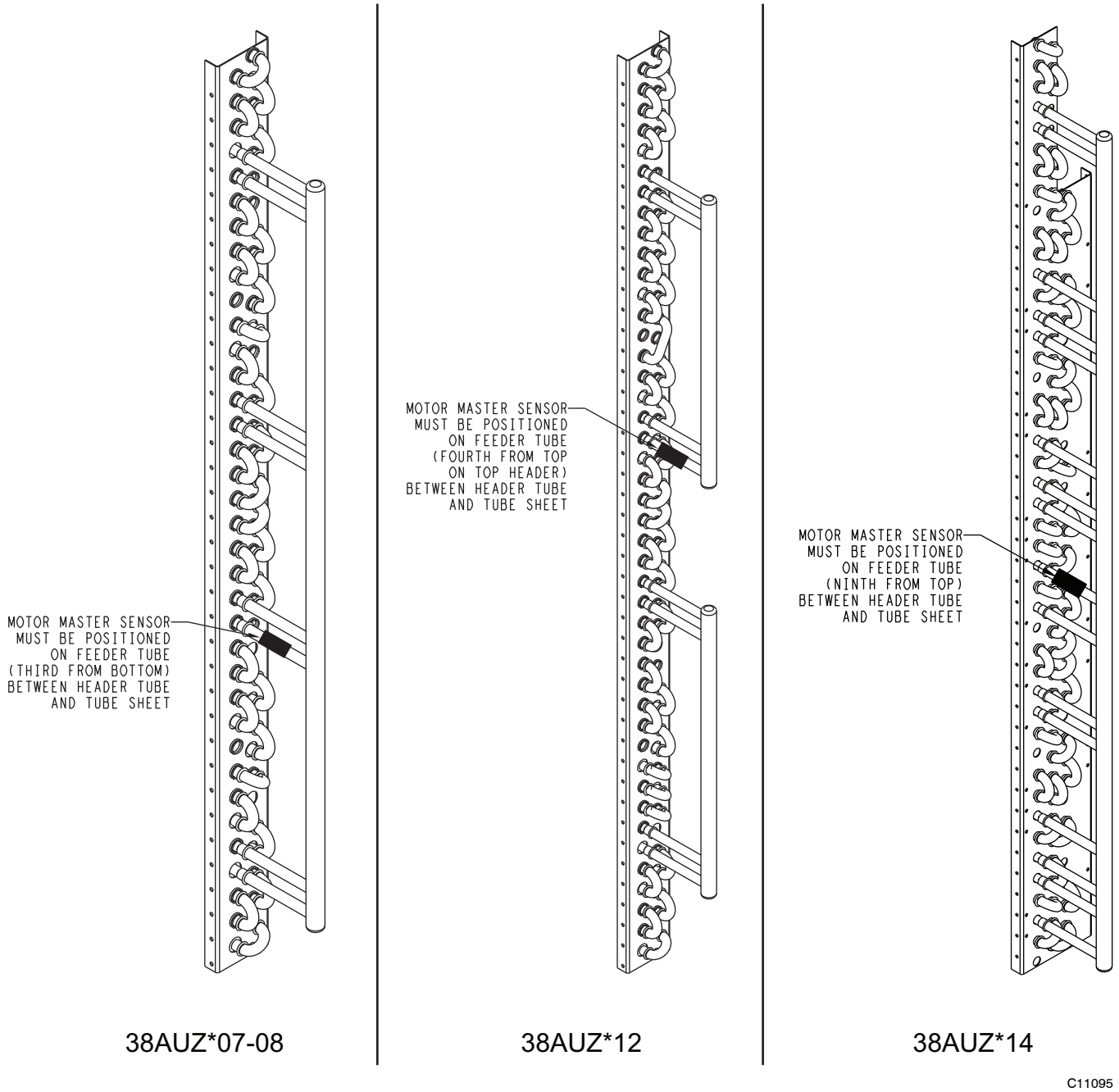

Fig. 40 - 38AUZ*07-14 Motormaster Sensor Locations (RTPF)

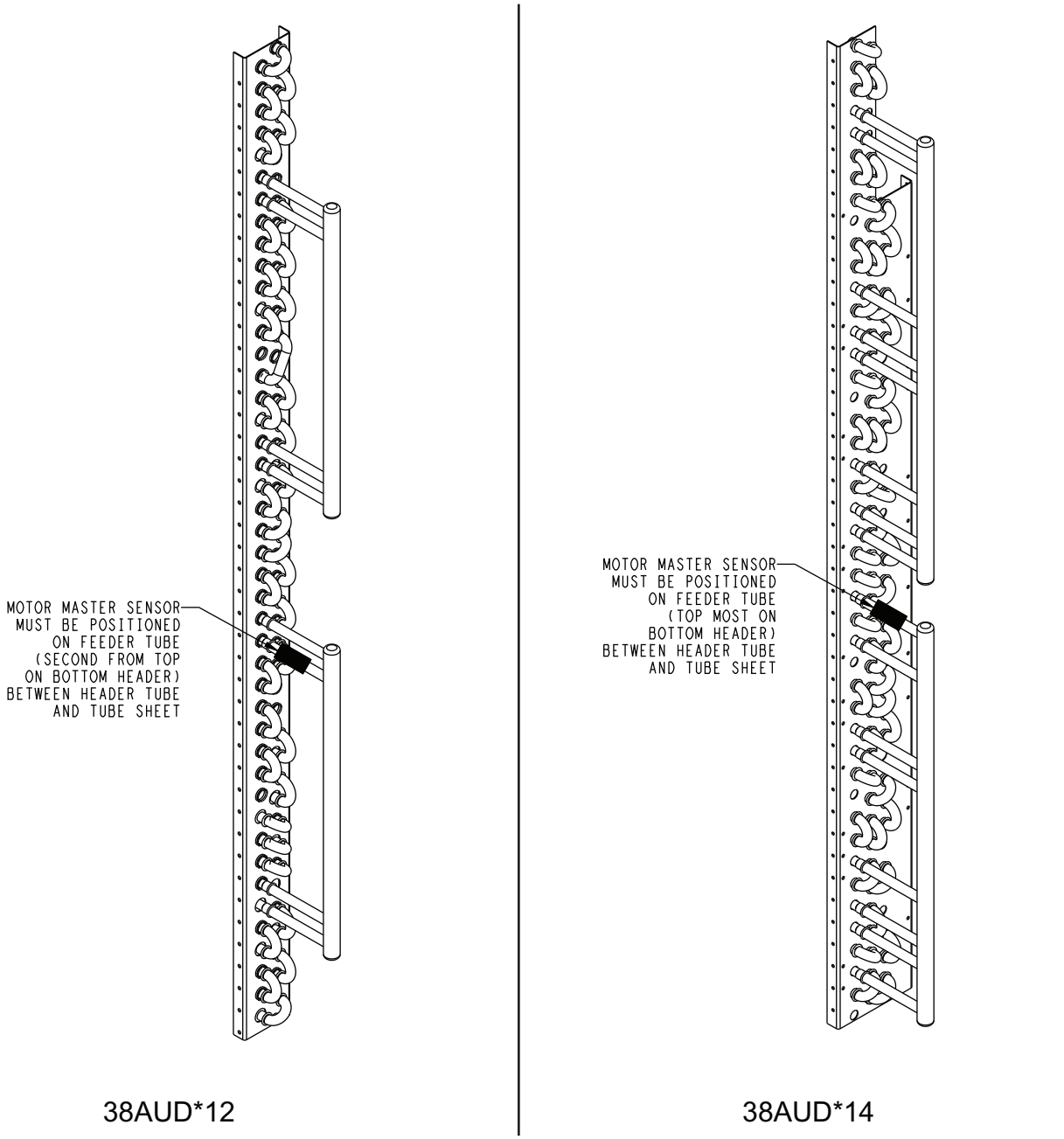

Fig. 41 - 38AUD*12-14 Motormaster Sensor Locations (RTPF)

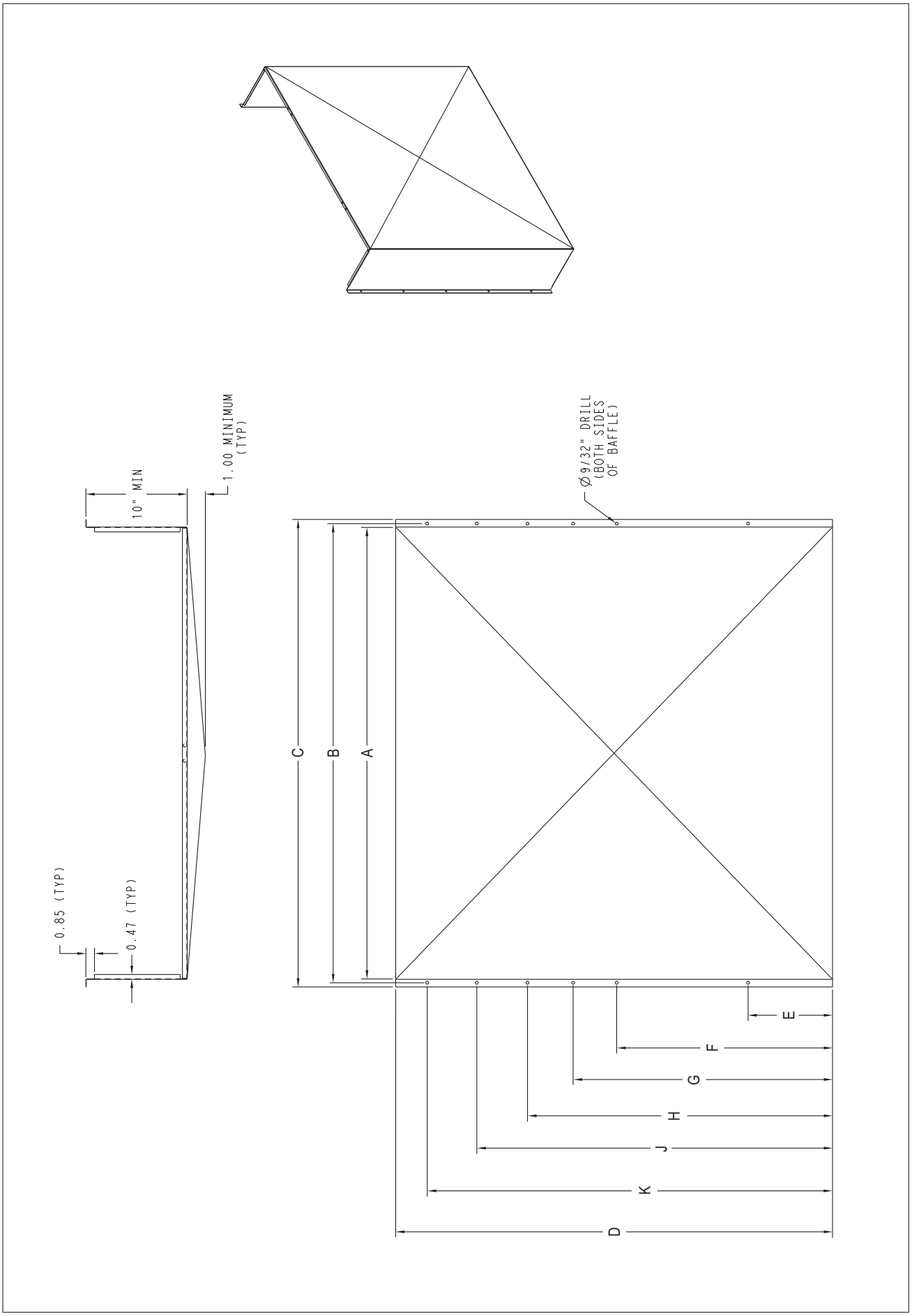

C10800

Fig. 42 - Wind Baffles

Table 16 – Wind Baffle Dimension

DIMENSIONS – INCHES											
UNIT	**BAFFLE**	**A**	**B**	**C**	**D**	**E**	**F**	**G**	**H**	**J**	**K**
38AUZ 07 (RTPF)	LEFT SIDE	28 1/2	29	29 3/4	35 1/4	1 1/4	9 1/4	17 1/4	25 1/4	33 1/4	–
	BACK	40	40 3/4	41/ 1/2	35 1/4	4 1/4	11 1/4	18 1/4	25 1/4	32 1/4	–
38AUZ 08 (RTPF)	LEFT SIDE	28 1/2	29	29 3/4	35 1/4	1 1/4	9 1/4	17 1/4	25 1/4	33 1/4	–
	BACK	40	40 3/4	41 1/2	35 1/4	4 1/4	11 1/4	18 1/4	25 1/4	32 1/4	–
38AUZ 12 / 38AUD 12 (RTPF)	LEFT SIDE	40 1/2	41	41 3/4	43 1/8	1 1/4	9 1/4	17 1/4	25 1/4	33 1/4	41 1/4
	BACK	40	40 3/4	41 1/2	43 1/8	4 1/4	11 1/4	18 1/4	25 1/4	32 1/4	39 1/4
38AUZ 14 / 38AUD 14 (RTPF)	LEFT SIDE	40 1/2	41	41 3/4	43 1/8	1 1/4	9 1/4	17 1/4	25 1/4	33 1/4	41 1/4
	BACK	40	40 3/4	41 1/2	43 1/8	4 1/4	11 1/4	18 1/4	25 1/4	32 1/4	39 1/4
	RIGHT SIDE	25	25 1/2	26 1/4	43 1/8	4 1/4	11 1/4	18 1/4	25 1/4	32 1/4	39 1/4
DIMENSIONS – MM											
UNIT	**BAFFLE**	**A**	**B**	**C**	**D**	**E**	**F**	**G**	**H**	**J**	**K**
38AUZ 07 (RTPF)	LEFT SIDE	718	737	756	895	33	236	439	643	846	–
	BACK	1016	1035	1054	895	107	284	462	640	818	–
38AUZ 08 (RTPF)	LEFT SIDE	718	737	756	895	33	236	439	643	846	–
	BACK	1016	1035	1054	895	107	284	462	640	818	–
38AUZ 12 / 38AUD 12 (RTPF)	LEFT SIDE	1022	1041	1060	1095	33	236	439	643	846	1049
	BACK	1016	1035	1054	1095	107	284	462	640	818	996
38AUZ 14 / 38AUD 14 (RTPF)	LEFT SIDE	1022	1041	1060	1095	33	236	439	643	846	1049
	BACK	1016	1035	1054	1095	107	284	462	640	818	996
	RIGHT SIDE	629	648	667	1095	107	284	462	640	818	996

Copyright 2015 Carrier Corp. • 7310 W. Morris St. • Indianapolis, IN 46231

Edition Date: 01/15

Catalog No: 38AU–7–14–01SI

Manufacturer reserves the right to change, at any time, specifications and designs without notice and without obligations.

Replaces: 38AU–11SI

START-UP CHECKLIST

I. PRELIMINARY INFORMATION

OUTDOOR: MODEL NO. _____ SERIAL NO. _____

INDOOR: AIRHANDLER MANUFACTURER _____

MODEL NO. _____ SERIAL NO. _____

ADDITIONAL ACCESSORIES _____

II. PRE-START-UP

OUTDOOR UNIT

IS THERE ANY SHIPPING DAMAGE? (Y/N) _____

IF SO, WHERE: _____

_____

WILL THIS DAMAGE PREVENT UNIT START-UP? (Y/N) _____

CHECK POWER SUPPLY. DOES IT AGREE WITH UNIT? (Y/N) _____

HAS THE GROUND WIRE BEEN CONNECTED? (Y/N) _____

HAS THE CIRCUIT PROTECTION BEEN SIZED AND INSTALLED PROPERLY? (Y/N) _____

ARE THE POWER WIRES TO THE UNIT SIZED AND INSTALLED PROPERLY? (Y/N) _____

CONTROLS

ARE THERMOSTAT AND INDOOR FAN CONTROL WIRING CONNECTIONS MADE AND CHECKED? (Y/N) _____

ARE ALL WIRING TERMINALS (including main power supply) TIGHT? (Y/N) _____

HAS CRANKCASE HEATER BEEN ENERGIZED FOR 24 HOURS? (Y/N) _____

INDOOR UNIT

HAS WATER BEEN PLACED IN DRAIN PAN TO CONFIRM PROPER DRAINAGE? (Y/N) _____

ARE PROPER AIR FILTERS IN PLACE? (Y/N) _____

HAVE FAN AND MOTOR PULLEYS BEEN CHECKED FOR PROPER ALIGNMENT? (Y/N) _____

DO THE FAN BELTS HAVE PROPER TENSION? (Y/N) _____

HAS CORRECT FAN ROTATION BEEN CONFIRMED? (Y/N) _____

PIPING

ARE LIQUID LINE SOLENOID VALVES LOCATED AT THE INDOOR COILS AS REQUIRED? (Y/N) _____

HAVE LEAK CHECKS BEEN MADE AT COMPRESSOR, OUTDOOR AND INDOOR COILS, TXVs (Thermostatic Expansion Valves), SOLENOID VALVES, FILTER DRIERS, AND FUSIBLE PLUGS WITH A LEAK DETECTOR? (Y/N) _____

LOCATE, REPAIR, AND REPORT ANY LEAKS. _____

HAVE LIQUID LINE SERVICE VALVES BEEN OPENED? (Y/N) _____

HAVE SUCTION LINE SERVICE VALVES BEEN OPENED? (Y/N) ___

CHECK VOLTAGE IMBALANCE

LINE-TO-LINE VOLTS: AB _____ V AC _____ V BC _____ V

(AB + AC + BC)/3 = AVERAGE VOLTAGE = _____ V

MAXIMUM DEVIATION FROM AVERAGE VOLTAGE = _____ V

VOLTAGE IMBALANCE = 100 X (MAX DEVIATION)/(AVERAGE VOLTAGE) = _____

IF OVER 2% VOLTAGE IMBALANCE, DO NOT ATTEMPT TO START SYSTEM!
CALL LOCAL POWER COMPANY FOR ASSISTANCE.

CHECK INDOOR UNIT FAN SPEED AND RECORD. _____

CHECK OUTDOOR UNIT FAN SPEED AND RECORD. _____

AFTER AT LEAST 10 MINUTES RUNNING TIME, RECORD THE FOLLOWING MEASUREMENTS:

SUCTION PRESSURE CIR 1: _____ CIR 2: _____

SUCTION LINE TEMP CIR 1: _____ CIR 2: _____

LIQUID PRESSURE CIR 1: _____ CIR 2: _____

LIQUID LINE TEMP CIR 1: _____ CIR 2: _____

ENTERING OUTDOOR UNIT AIR TEMP _____

LEAVING OUTDOOR UNIT AIR TEMP _____

INDOOR UNIT ENTERING-AIR DB (dry bulb) TEMP _____

INDOOR UNIT ENTERING-AIR WB (wet bulb) TEMP _____

INDOOR UNIT LEAVING-AIR DB TEMP _____

INDOOR UNIT LEAVING-AIR WB TEMP _____

COMPRESSOR 1 AMPS (L1/L2/L3) _____ / _____ / _____

COMPRESSOR 2 AMPS (L1/L2/L3) _____ / _____ / _____

NOTES:

Copyright 2015 Carrier Corp. • 7310 W. Morris St. • Indianapolis, IN 46231

Edition Date: 01/15

Catalog No: 38AU–7–14–01SI

Manufacturer reserves the right to change, at any time, specifications and designs without notice and without obligations.

Replaces: 38AU–11SI