38AUQ
Heat Pump Condensing Units
60 Hz
With Puron® (R−410A) Refrigerant
Sizes 07, 08 and 12

Carrier
turn to the experts

Installation, Start−Up and Service Instructions

CONTENTS

SAFETY CONSIDERATIONS 2
INSTALLATION GUIDELINES 3
Rated Indoor Airflow (cfm) 3
INSTALLATION . . . . . 7 - 16
Step 1 - Plan for Unit Location 7
Step 2 - Complete Pre-Installation Checks 8
Step 3 – Prepare Unit Mounting Support 8
Step 4 - Rig and Mount the Unit 8
Step 5 - Complete Refrigerant Piping Connections . . . 8
Step 6 - Install Accessories 12
Step 7 - Complete Electrical Connections 12
PRE-START-UP 18
System Checks 18
Turn On Crankcase Heaters 18
Preliminary Charge 18
START-UP . . . . . 18 - 21
38AUQ Units 18
OPERATING SEQUENCE 22
Indoor (Supply) Fan 22
Cooling Unit Without Economizer 22
Cooling Unit With Economizer 22
Defrost Cycle 22
Supplemental Heating/Emergency Heating 23
Cooling and Heating Shutdown 23
ROUTINE SYSTEM MAINTENANCE 23
Quarterly Inspection
(and 30 days after initial start) 23
SERVICE . . . . . 24 - 35
Refrigeration System 24
Compressor Oil 24
Servicing Systems on Roofs
with Synthetic Materials 24
Liquid Line Filter Driers 24
Filed Refrigerant Access Ports 24
Outdoor Coil Metering Devices 24
Refrigerant System Pressure Access Ports 25
Compressor Protection 25
Crankcase Heater 25
Commercial Defrost Board 25
Comfort Alert Diagnostic Module 32
Lubrication 34
Outdoor Coil Maintenance and
Cleaning Recommendations 34
Service Parts 36
Fastener Torque Values 36
TROUBLESHOOTING 37
APPENDIX A
Air Conditioner and Heat Pump with Puron® –
Quick Reference Guide 38
APPENDIX B
Wiring Diagram List 38
APPENDIX C
Low Ambient Option — Factory Installed 39
START-UP CHECKLIST . . . . . 43 - 44

SAFETY CONSIDERATIONS

Improper installation, adjustment, alteration, service, maintenance, or use can cause explosion, fire, electrical shock or other conditions which may cause personal injury or property damage. Consult a qualified installer, service agency, or your distributor or branch for information or assistance. The qualified installer or agency must use factory-authorized kits or accessories when modifying this product. Refer to the individual instructions package

Follow all safety codes. Wear safety glasses and work gloves. Use quenching cloths for brazing operations and have a fire extinguisher available. Read these instructions thoroughly and follow all warnings or cautions attached to the unit. Consult local building codes and appropriate national electrical codes (in USA, ANSI/NFPA70, National Electrical Code (NEC); in Canada, CSA C22.1) for special requirements.

It is important to recognize safety information. This is the safety-alert symbol ⚠. When you see this symbol on the unit and in instructions or manuals, be alert to the potential for personal injury.

Understand the signal words DANGER, WARNING, CAUTION, and NOTE. These words are used with the safety-alert symbol. DANGER identifies the most serious hazards which **will** result in severe personal injury or death. WARNING signifies hazards which **could** result in personal injury or death. CAUTION is used to identify unsafe practices, which **may** result in minor personal injury or product and property damage. NOTE is used to highlight suggestions which **will** result in enhanced installation, reliability, or operation.

⚠ WARNING

ELECTRICAL SHOCK HAZARD

Failure to follow this warning could cause in personal injury or death.

Before performing service or maintenance operations on unit, always turn off main power switch to unit and install lockout tag. Unit may have more than one power switch.

⚠ WARNING

UNIT OPERATION AND SAFETY HAZARD

Failure to follow this warning could cause personal injury, death and/or equipment damage.

Puron® (R-410A) refrigerant systems operate at higher pressures than standard R-22 systems. Do not use R-22 service equipment or components on Puron refrigerant equipment.

⚠ WARNING

PERSONAL INJURY AND ENVIRONMENTAL HAZARD

Failure to follow this warning could cause personal injury or death.

Relieve pressure and recover all refrigerant before system repair or final unit disposal.

Wear safety glasses and gloves when handling refrigerants. Keep torches and other ignitions sources away from refrigerants and oils.

⚠ CAUTION

CUT HAZARD

Failure to follow this caution may result in personal injury.

Sheet metal parts may have sharp edges or burrs. Use care and wear appropriate protective clothing, safety glasses and gloves when handling parts and servicing 38AUQ units.

INSTALLATION GUIDELINE

Replacement /Retrofit – R22 to Puron®

Split system heat pumps are intended to be installed with matching indoor sections only. The 38AUQ heat pump outdoor units are matched only with same-size 40RUQ indoor sections. Existing R-22 indoor coils cannot be converted to Puron® R-410A heat pump duty. Only the existing refrigerant piping is a candidate for retrofit use.

Acid test – If the existing system is being replaced because of a compressor electrical failure, assume acid is in system. If system is being replaced for any other reason, use an approved acid test kit to determine acid level. If even low levels of acid are detected, install a 100 percent activated alumina suction line filter drier in addition to the replacement liquid-line filter drier. Operate this system in COOLING ONLY. Remove the suction line filter drier as soon as possible, with a maximum of 72 hr of operation.

Recommendation: Install a ball valve in the liquid line at the filter drier location when installing a suction filter in the suction line.

Evaluate existing refrigerant piping – Reuse of existing refrigerant piping involves three issues: quality (strength) of existing tubing, cleanliness and tube size. R-410A operates at pressures that are 50 to 70% higher than the operating pressures in R-22 systems. It is important that the existing piping set be in excellent physical condition to be considered suitable for re-use with R-410A. If the physical condition of the existing piping set is not excellent, then remove the existing piping and replace with new piping. Refer to Step 5 for a discussion on selecting pipe sizes for these 38AUQ heat pumps; refer to Table 2 for recommended pipe sizes.

If the existing piping set is suitable for re-use with R-410A based on its condition, determine the relative locations and elevation differences between outdoor section (38AUQ) and indoor section (40RUQ) and then check the sizes of the existing lines against the recommended pipe sizes in Table 2 and the MAXIMUM vapor riser pipe size use data in Table 3. Do not use pipe sizes that exceed these maximum vapor riser sizes as oil return at part load conditions in vertical rises may be an issue. Replace any riser sections with reduced pipe sizes if existing pipe sizes exceed these maximum tube size limits.

Installation –

1. Remove the existing evaporator coil or fan coil and install the replacement coil.
2. Drain oil from low points and traps in vapor line tubing if they were not replaced.
3. Remove the existing outdoor unit. Install the new outdoor unit according to these installation instructions.
4. Flush the interconnection piping system with dry Nitrogen to eliminate as much trace of mineral oil as possible.
5. Install the factory-supplied liquid-line filter drier at the indoor coil just upstream of the TXV.

⚠ CAUTION

UNIT DAMAGE HAZARD

Failure to follow this caution may result in equipment damage or improper operation.

Never install suction-line filter drier in the liquid-line of a Puron® system.

6. If required, install a 100% activated alumina suction line filter drier at the outdoor unit.
7. Evacuate and charge the system according to the instructions in this installation manual.
8. Operate the system for 10 hr. In COOLING MODE ONLY. Monitor the pressure drop across the suction line filter drier. If pressure drop exceeds 3 psig (21kPa), replace suction-line and liquid-line filter driers. Be sure to purge system with dry nitrogen and evacuate when replacing filter driers. Continue to monitor the pressure drop across suction-line filter drier. Repeat filter changes is necessary. Never leave suction-line filter drier in system longer than 72 hr (actual time).

Rated Indoor Airflow (cfm)

The table below lists the rated indoor airflow used for the AHRI efficiency rating for the units covered in this document.

38AUQ with 40RUQ

Model Numbers	Full Load Airflow (cfm)
38AUQ*07 – 40RUQ*07	2400
38AUQ*08 – 40RUQ*08	3000
38AUQ*12 – 40RUQ*12	3000

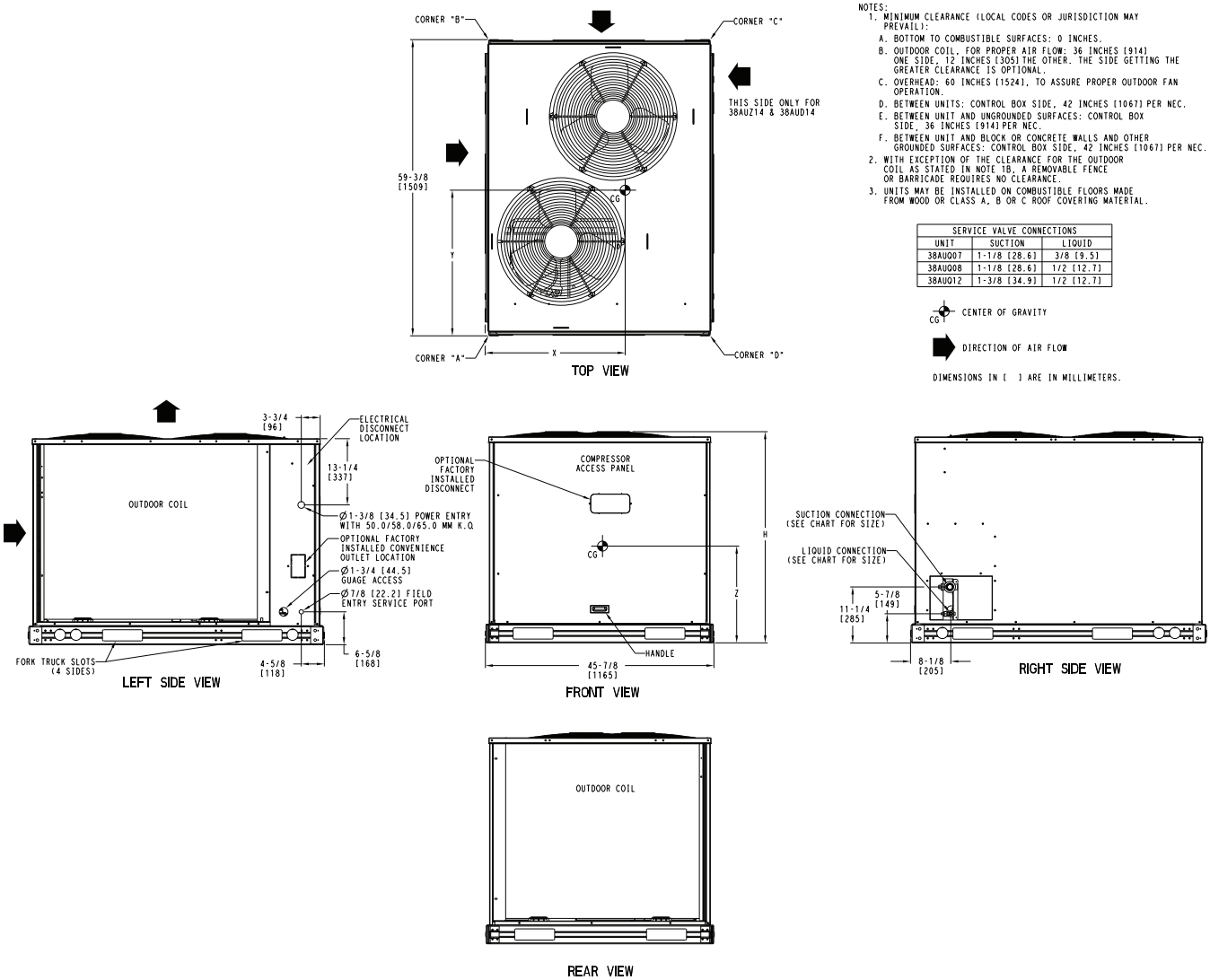

UNIT	Standard Weight		Corner A		Corner B		Corner C		Corner D		Center of Gravity			Unit Height
	lbs.	kg.	lbs.	kg.	lbs.	kg.	lbs.	kg.	lbs.	kg.	X	Y	Z	H
38AUQ*07	444	201	134	61	97	44	90	41	123	56	23 [584]	26 [660]	13 [330]	42-3/8 [1076]
38AUQ*08	483	219	162	74	110	50	85	39	125	57	20 [508]	24 [610]	13 [330]	42-3/8 [1076]
38AUQ*12	575	261	186	84	126	57	106	48	157	71	21 [533]	24 [610]	23 [584]	50-3/8 [1280]

C11032

Fig. 1 - 38AUQ*07-12 Unit Dimensions

Table 1A — Physical Data — 38AUQ*07-12 Units — 60 Hz English

UNIT SIZE 38AUQ*	07	08	12
NOMINAL CAPACITY (tons)	6	7.5	10
OPERATING WEIGHTS (lb)			
Aluminum-Fin Coils	444	483	575
REFRIGERANT TYPE‡	R-410A		
Operating Charge, Typical (lb)†	18.0	21.0	27.0
Shipping Charge (lb)	9.0	9.0	9.0
COMPRESSOR			
Qty...Type	1...Scroll	1...Scroll	1...Scroll
OUTDOOR FANS			
Qty...Rpm	2...1100	2...1100	2...1100
Motor Hp	1/4	1/4	1/4
Diameter (in)	22	22	22
Nominal Airflow (Cfm Total)	6,000	6,000	6,000
Watts (Total)	610	610	610
OUTDOOR COIL (Qty)	1...Round Tube/Plate Fin (RTPF)		
Face Area (sq ft total)	17.5	23.0	28.1
Rows/Fins per inch (FPI)	2/17	2/17	2/17
CONTROLS			
Pressurestat Settings (psig)			
High Cutout	630 ±10	630 ±10	630 ±10
Cut-in	505 ±20	505 ±20	505 ±20
Low Cutout	27 ±3	27 ±3	27 ±3
Cut-in	44 ±5	44 ±5	44 ±5
PIPING CONNECTIONS (in. ODS)			
Qty...Vapor	1...1 1/8	1...1 1/8	1...1 3/8
Qty...Liquid	1...3/8	1...1/2	1...1/2

LEGEND
ODS — Outside Diameter Sweat (socket)
‡ Unit is factory-supplied with partial charge only.
† Typical operating charge with 25 ft of interconnecting piping.

38AUQ

Table 1B — Physical Data — 38AUQ*07-12 Units — 60 Hz SI

UNIT SIZE 38AUQ*	07	08	12
NOMINAL CAPACITY (kW)	21.1	26.4	35.1
OPERATING WEIGHT (kg)			
Aluminum-Fin Coils	201	219	261
REFRIGERANT TYPE‡	R-410A		
Operating Charge, Typical (kg)†	8.2	9.5	12.2
Shipping Charge (kg)	4.1	4.1	4.1
COMPRESSOR			
Qty...Type	1...Scroll	1...Scroll	1...Scroll
OUTDOOR FANS			
Qty...r/s	2...18	2...18	2...18
Motor Hp NEMA	1/4	1/4	1/4
Diameter (mm)	560	560	560
Nominal Airflow (L/s)	2832	2832	2832
Watts (Total)	610	610	610
OUTDOOR COIL (Qty)	1...Round Tube/Plate Fin (RTPF)		
Face Area (sq m total)	1.6	2.1	2.6
Rows/Fins per Meter (Fins/m)	2/670	2/670	2/670
CONTROLS			
Pressurestat Settings (kPa)			
High Cutout	4344 ±70	4344 ±70	4344 ±70
Cut-in	3482 ±138	3482 ±138	3482 ±138
Low Cutout	186 ±21	186 ±21	186 ±21
Cut-in	303 ±35	303 ±35	303 ±35
PIPING CONNECTIONS (in. ODS)			
Qty...Vapor	1...1 1/8	1...1 1/8	1...1 3/8
Qty...Liquid	1...3/8	1...1/2	1...1/2

LEGEND
NEMA — National Electrical Manufacturers Association
ODS — Outside Diameter Sweat (socket)
‡ Unit is factory-supplied with partial charge only.
† Typical operating charge with 7.62 m of interconnecting piping.

38AUQ

1	2	3	4	5	6	7	8	9	10	11	12	13	14	15	16	17	18
3	8	A	U	Q	A	1	2	A	0	C	6	–	0	A	0	A	0

Model Type
38AU= Carrier Condensing Unit
Puron® R–410A Refrigerant

Type of Coil
Q = Heat Pump Scroll Compressor

Refrigerant Options
A = None
B = Low Ambient

Nominal Tonnage
07 = 6 Tons
08 = 7.5 Tons
12 = 10 Tons

Not Used
A = Not Used

Not Used
0 = Not Used

Coil Options
A = Al/Cu
B = Precoat Al/Cu
C = E-Coat Al/Cu
M = Al/Cu with Hail Guard
N = Precoat Al/Cu with Hail Guard
P = E-Coat Al/Cu with Hail Guard

Voltage
1 = 575/3/60
5 = 208/230/3/60
6 = 460/3/60

Design Revision
–= Initial Rev (Discrete Model Number)

Base Unit Controls
0 = Electro-Mechanical Controls

Not Used
A = Place Holder

Service Options
0 = None
1 = Un-powered Convenience Outlet
2 = Powered Convenience Outlet

Electrical Options
A = None
C = Non-Fused Disconnect

Packaging
0 = Standard
1 = LTL

C150031

Fig. 2 - Model Number Nomenclature

POSITION NUMBER	1	2	3	4	5	6	7	8	9	10
TYPICAL	1	4	1	1	G	1	2	3	4	5

POSITION	DESIGNATES
1–2	Week of manufacture (fiscal calendar)
3–4	Year of manufacture (”11” = 2011)
5	Manufacturing location (G = ETP, Texas, USA)
6–10	Sequential number

C11034

Fig. 3 - Serial Number Nomenclature

INSTALLATION

Jobsite Survey

Complete the following checks before installation.

1. Consult local building codes and the NEC (National Electrical Code) ANSI/NFPA 70 for special installation requirements.
2. Determine unit location (from project plans) or select unit location.
3. Check for possible overhead obstructions which may interfere with unit lifting or rigging.

Step 1 — Plan for Unit Location

Select a location for the unit and its support system (pad, rails or other) that provides for the minimum clearances required for safety. This includes the clearance to combustible surfaces, unit performance and service access below, around and above unit as specified in unit drawings. See Fig. 4.

Select a unit mounting system that provides adequate height to allow for removal and disposal of frost and ice that will form during the heating-defrost mode.

NOTE: Consider also the effect of adjacent units on airflow performance and control box safety clearance.

Do not install the outdoor unit in an area where fresh air supply to the outdoor coil may be restricted or when recirculation from the condenser fan discharge is possible. Do not locate the unit in a well or next to high walls.

Evaluate the path and required line length for interconnecting refrigeration piping, including vapor riser

requirements and liquid line lift; a heat pump system will have one of each type in opposite modes. Relocate sections to minimize the length of interconnecting tubing.

DO NOT BURY REFRIGERATION LINES.

Although unit is weatherproof, avoid locations that permit water from higher level runoff and overhangs to fall onto the unit.

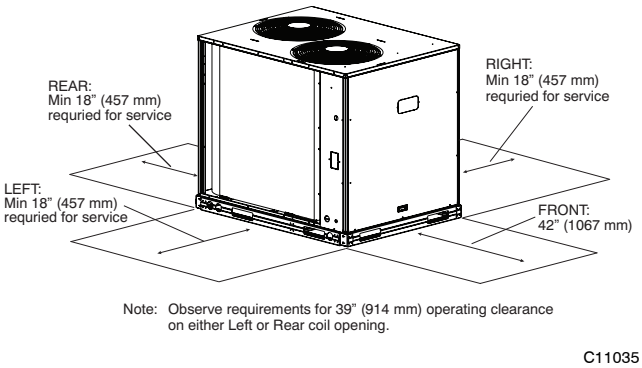

Fig. 4 - Service Clearance Dimensional Drawing

Step 2 — Complete Pre-Installation Checks

Check Unit Electric Characteristic —

Confirm before installation of unit that voltage, amperage and circuit protection requirements listed on unit data plate agree with power supply provided.

Un-crate Unit —

Remove unit packaging except for the top skid assembly, which should be left in place until after the unit is rigged into its final location.

Inspect Shipment —

File a claim with shipping company if the shipment is damaged or incomplete.

Consider System Requirements —

- Consult local building codes and National Electrical Code (NEC, U.S.A.) for special installation requirements.
- Allow sufficient space for airflow clearance, wiring, refrigerant piping, and servicing unit. See Fig. 1 for unit dimensions and weight distribution data.
- Locate the unit so that the outdoor coil (condenser) airflow is unrestricted on all sides and above.
- The unit may be mounted on a level pad directly on the base channels or mounted on raised pads at support points. See Tables 1A and 1B for unit operating weights. See Fig. 1 for weight distribution based on recommended support points.

NOTE: If vibration isolators are required for a particular installation, use the data in Fig. 1 to make the proper selection.

Step 3 — Prepare Unit Mounting Support

Slab Mount —

Provide a level concrete slab that extends a minimum of 6 in. (150 mm) beyond unit cabinet. Install a gravel apron in front of condenser coil air inlet to prevent grass and foliage from obstructing airflow.

Step 4 — Rig and Mount the Unit

Rigging —

These units are designed for overhead rigging. Refer to the rigging label for preferred rigging method. Spreader bars are not required if top crating is left on the unit. All panels must be in place when rigging. As further protection for coil faces, plywood sheets may be placed against the sides of the unit, behind cables. Run cables to a central suspension point so that the angle from the horizontal is not less than 45 degrees. Raise and set the unit down carefully.

If it is necessary to roll the unit into position, mount the unit on longitudinal rails, using a minimum of 3 rollers. Apply force to the rails, not the unit. If the unit is to be skidded into position, place it on a large pad and drag it by the pad. Do not apply any force to the unit.

Raise from above to lift the unit from the rails or pad when unit is in its final position.

After the unit is in position, remove all shipping materials and top crating.

Step 5 — Complete Refrigerant Piping Connections

Refrigerant lines must be carefully designed and constructed to ensure equipment reliability and efficiency. Line length, pressure drop, compressor oil return, and vertical separation are several of the design criteria that must be evaluated. See Table 2.

IMPORTANT: Do not bury refrigerant piping underground.

IMPORTANT: A refrigerant receiver is not provided with the unit. Do not install a receiver.

Table 2 – 38AUQ*07-12 Piping Recommendations (Single-Circuit Unit)

R-410A	Equivalent Length				
	Ft	0-38	38-75	75-113	113-150
Model Nominal Capacity	Length Linear Length Equiiv	0-25 0-38	25-50 38-75	50-75 75-113	75-100 113-115
38AUQ*07	Liquid Line	3/8	3/8	3/8 1/2	3/8 1/2
	Max Lift Cool Heat	 25 25	 50 50	 48 75 46 60	 39 100 31 60
	Vapor Line	7/8	7/8	1-1/8	1-1/8
	Charge (lbs)	17.8	18.8	20.3 22.6	21.4 24.5
38AUQ*08	Liquid Line	1/2	1/2	1/2	1/2
	Max Lift Cool Heat	 25 25	 50 50	 75 60	 100 60
	Vapor Line	7/8 1-1/8	1-1/8	1-1/8	1-1/8
	Charge (lbs)	20.9	23.0	24.9	26.8
38AUQ*12	Liquid Line	1/2	1/2	1/2	1/2 5/8
	Max Lift Cool Heat	 25 25	 50 50	 75 60	 85 100 60 60
	Vapor Line	7/8 1-1/8	1-1/8	1-1/8	1-1/8 1-3/8
	Charge (lbs)	26.8	28.8	30.7	33.4 37.2

Legend:	
Length Equiv	Equivalent tubing length, including effects of refrigeration specialties devices
Liquid Line	Tubing size, inches OD.
Max Lift Cooling Heating	Maximum liquid lift at maximum permitted liquid line pressure drop • Indoor unit ABOVE outdoor unit • Indoor unit BELOW outdoor unit
Vapor Line	Tube size, inches OD
Charge	Charge Quantity, lbs. Calculated for both liquid line sizes (where applicable), but only with large suction line size (where applicable)
NOTE:	For applications with linear length greater than 100 ft (30.5 m), contact your local Carrier representative.

Check Vertical Separation —

If there is any vertical separation between the indoor and outdoor units, check to ensure that the separation is within allowable limits. Relocate equipment if necessary.

Provide Safety Relief —

If local codes dictate an additional safety relief device, purchase locally and install locally. Installation will require the recovery of the factory shipping charge before the factory tubing can be cut and the supplemental relief device is installed.

Refrigerant Line Sizing —

Consider the length of the piping required between the outdoor and indoor units. The maximum allowable line length is 100 ft (30.5 m). See Table 2. Refrigerant vapor piping should be insulated.

Risers in Heat Pump Piping Systems —

Elevation differences between the outdoor unit and the indoor unit in heat pump systems will create two riser line conditions – one in the liquid line in one mode and one in the vapor line in the opposite mode. See the following table to identify which lines are risers in this installation.

Mode	38AUQ Unit BELOW ID Unit	38AUQ Unit ABOVE ID Unit
	Riser in	Riser in
Cooling	Liquid	Vapor (Suction Gas)
Heating	Vapor (Discharge Gas)	Liquid

Liquid Line Riser: Refer to Pipe Sizing Table, Table 2; observe Max Lift limits for liquid line according to unit mode, equivalent line length and pipe size.

Vapor Line Riser: Refer to Table 3 for maximum pipe size in single pipe vapor risers. All pipe size recommendations in Pipe Sizing Table, Table 2, satisfy these maximum vapor line sizes. If this installation is re-using existing piping, check the vapor line sizes against these maximum values; replace riser sections with these pipe sizes if necessary.

Table 3 – Maximum Vapor Line Sizes

38AUQ Size	38AUQ Unit BELOW ID Unit	38AUQ Unit ABOVE ID Unit
	Max Diameter, Single Pipe (in.)	
07	1-1/8	1-5/8
08	1-3/8	1-5/8
12	1-5/8	1-5/8

Table 4 – Puron-duty Filter Drier(s)

Model-Size	Qty	Liquid Line OD	Desiccant Volume	Part Number Ref
38AUQ*07	1	3/8-in	8 cu. in.	KH43LG088
38AUQ*08	1	1/2-in	16 cu. in.	KH43LG089
38AUQ*12	1	1/2-in	16 cu. in.	KH43LG089

Table 5 – Refrigerant Specialties Part Numbers

LIQUID LINE SIZE (in.)	LIQUID LINE SOLENOID VALVE (LLSV)	SOLENOID COIL	SIGHT GLASS	FILTER DRIER
3/8	EF680033 plus EF680039 biflow kit	EF680037	KM680008	Provided with unit See Table 4
1/2	EF680035 plus EF680039 biflow kit	EF680037	KM680004	
5/8	EF680036 plus EF680039 biflow kit	EF680037	KM680005	

Install Filter Drier and Moisture Indicator —

Every unit MUST have a bi-directional filter drier in the liquid line. Locate the filter drier(s) at the indoor unit, close to the indoor coil's thermal expansion valve (TXV) inlets.

38AUQ units include one Puron-duty filter drier, shipped in cartons attached to the unit basepan. Remove the filter drier and prepare to install in the liquid line at the indoor coil. Do not remove connection fitting plugs until ready to connect and braze the filter drier into the liquid line position. See Table 4.

IMPORTANT: A refrigerant receiver is not provided with the unit. Do not install a receiver.

Installation of liquid line moisture indicating sightglass in each circuit is recommended. Locate the sightglass(es) between the outlet of the filter drier and the TXV inlet.

Refer to Table 5 for recommendations on refrigeration specialties.

Select the filter drier for maximum unit capacity and minimum pressure drop. Complete the refrigerant piping from the indoor unit to the outdoor unit before opening the liquid and vapor service valves at the outdoor unit.

Install Liquid Line Solenoid Valves —

It is recommended that a bi-directional solenoid valve be placed in the main liquid line (see Figs. 5 & 6) between the outdoor unit and the indoor coil. Locate the solenoid valve at the end of the liquid line, near the outdoor unit connections, with flow direction arrow pointed at the outdoor unit. Refer to Table 5. (A liquid line solenoid valve is required when the liquid line length exceeds 75 ft [23 m].) This valve prevents refrigerant migration (which causes oil dilution) to the compressor during the off cycle, at low outdoor ambient temperatures. Wire the solenoid according to the unit label diagram.

⚠ CAUTION

UNIT DAMAGE HAZARD

Failure to follow this caution may result in equipment damage.

Failure to use a solenoid valve relay (SVR) PNO HN61PC005 may cause overload of Comfort Alert Diagnostic Module (CADM) and compressor alarm lock out.

CAPACITY CONTROL LIQUID LINE SOLENOID VALVE - 38AUQ units are single-stage only designs. DO NOT USE a capacity control liquid line solenoid valve on the indoor coil.

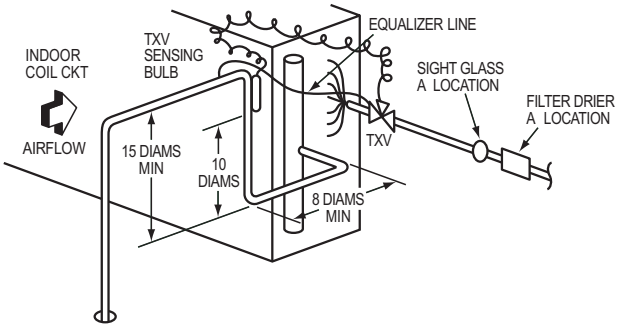

LEGEND

TXV — Thermostatic Expansion Valve

C11036

Fig. 5 - Location of Sight Glass(es) and Filter Driers (typical 38AUQ size 07 & 08)

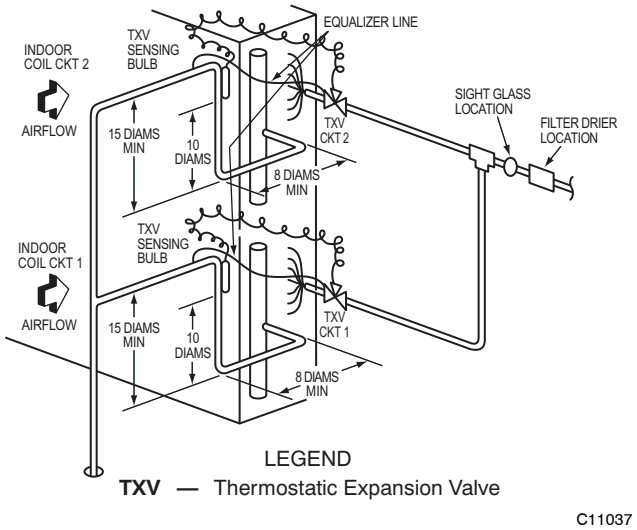

Fig. 6 - Location of Sight Glass(es) and Filter Driers (typical 38AUQ size 12)

Table 6 – Minimum Outdoor Air Operating Temperature

UNIT	% COMPRESSOR CAPACITY	MINIMUM OUTDOOR TEMP — F (C)*	
		Standard Unit	Head Pressure Control†
38AUQ07	100	35 (1.7)	–20 (–28.9)
38AUQ08		35 (1.7)	–20 (–28.9)
38AUQ12		35 (1.7)	–20 (–28.9)

* Applies to Cooling mode of operation only.

† Wind baffles (field-supplied and field-installed) are recommended for all units with low ambient head pressure control. Refer to Low Ambient Control Installation Instructions (shipped with accessory) for details.

Table 7 – Insulation for Vapor Line Exposed to Outdoor Conditions

LENGTH OF EXPOSED VAPOR LINE*		INSULATION THICKNESS†	
ft	m	in.	mm
10	3	3/8	10
25	8	1/2	13
35	11	3/4	19
50	15	3/4	19

* Recommended vapor line insulation for piping exposed to outdoor conditions to prevent loss of heating during heating cycle. When vapor line goes through interior spaces, insulation should be selected to prevent condensation on cooling cycle. Heating capacity should be reduced 1000 Btuh (295 W) if over 35 ft (11 m) of vapor line with 3/4 in. (19 mm) insulation is exposed to outdoor conditions.

† Closed cell foam insulation with a thermal conductivity of: 0.28 Btu • in./ft^2 • h • °F (0.04 W/m • °C).

Make Piping Connections —

Piping connections at the 38AUQ unit are ball valves with stub tube extensions. Do not open the unit service valves until all interconnecting tube brazing as been completed.

The stub tube connections include 1/4-in SAE service fittings with Schrader valve cores (see Fig. 7). Before making any brazed connections to the unit service valves, remove both Schrader valve caps and cores and save for re-installation. Connect a source for nitrogen to one of these service fittings during tube brazing to prevent the formation of copper oxides inside the tubes at brazed joints.

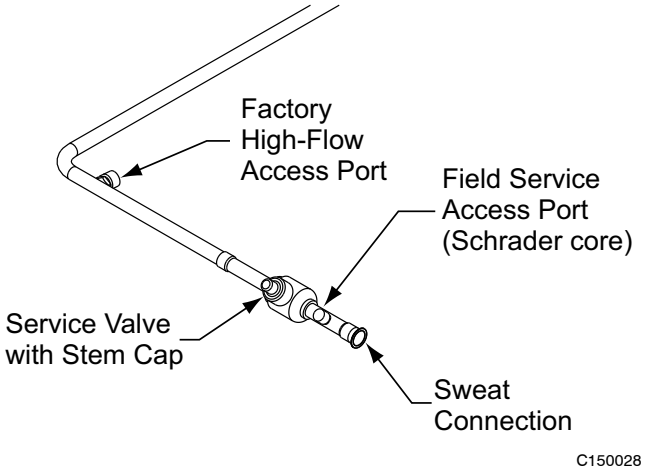

Fig. 7 - Typical Piping Connection Assembly

When connecting the field tubing to the 38AUQ service valves, wrap the valves in wet rags to prevent overheating

Pressure-test all joints from outdoor unit connections over to the indoor coil, using nitrogen as pressure and with soap-and-bubbles.

When pressure-testing is completed, remove the nitrogen source at the outdoor unit service valves and re-install the two Schrader valve cores. Torque the cores to 2-3 in-lbs (23-34 N-cm).

Where vapor line is exposed to outdoor air, line must be insulated. See Table 7 for insulation requirements.

Evacuation/Dehydration —

Evacuate and dehydrate the connected refrigeration system(s) (excluding the 38AUQ unit) to 500 microns using a two-stage vacuum pump attached to the service ports outside the 38AUQ service valves, following description in GTAC II, Module 4, System Dehydration.

⚠ WARNING

UNIT OPERATION AND SAFETY HAZARD

Failure to follow this warning could cause personal injury, death and/or equipment damage.

Puron® (R-410A) refrigerant systems operate at higher pressures than standard R-22 systems. Do not use R-22 service equipment or components on Puron refrigerant equipment.

IMPORTANT: Charge in Cooling mode only!

Preliminary Charge —

Before starting the unit, charge R-410A liquid refrigerant into the high side of each 38AUQ circuit through the liquid service valve(s). The amount of refrigerant added must be at least 80% of the operating charge listed in Table 2 for LINEAR line length LESS the factory charge quantity (if factory shipping charge has not been removed). See the following example.

Allow high and low side pressures to equalize. If pressures do not equalize readily, charge R-410A vapor (using special service manifold with expansion device) into the vapor line service port for the low side of system to assure charge in the evaporator. Refer to GTAC II, Module 5, Charging, Recover, Recycling, and Reclamation for liquid charging procedures.

Example:

38AUQ*08

60-ft (18.3 m) linear line length

Equivalent line length 90-ft (27.4 m)

Liquid Lift: 20-ft (6.1 m)

Select line sizes from Table 2 (38AUQ):

Liquid $^1/_2$ in

Vapor 1-$^1/_8$ in.

Charge 23.0 lbs (at 75-ft linear length)

80% of Operating Charge:

0.80 x 23.0 = 17.6 lbs

Factory Shipping Charge: 9 lbs

Field-charge quantity: 17.6 lbs – 9.0 lbs = 8.6 lbs

For linear line lengths longer than 100 ft (30.5 m), contact your local Carrier representative for system charge value.

Step 6 — Install Accessories

Accessories requiring modifications to unit wiring should be completed now. These accessories may include Winter Start controls, Low Ambient controls, phase monitor, Compressor LOCout. Refer to the instructions shipped with the accessory.

Step 7 — Complete Electrical Connections

⚠ WARNING

ELECTRICAL SHOCK HAZARD

Failure to follow this warning could result in personal injury or death.

Do not use gas piping as an electrical ground. Unit cabinet must have an uninterrupted, unbroken electrical ground to minimize the possibility of personal injury if an electrical fault should occur. This ground may consist of electrical wire connected to unit ground lug in control compartment, or conduit approved for electrical ground when installed in accordance with NEC (National Electrical Code); ANSI/NFPA 70, latest edition (in Canada, Canadian Electrical Code CSA [Canadian Standards Association] C22.1), and local electrical codes.

NOTE: Field-supplied wiring shall conform with the limitations of minimum 63°F (33°C) rise.

Field Power Supply —

If equipped with optional Powered Convenience Outlet: The power source leads to the convenience outlet's transformer primary are not factory connected. Installer must connect these leads according to required operation of the convenience outlet. If an always-energized convenience outlet operation is desired, connect the source leads to the line side of the unit-mounted disconnect. (Check with local codes to ensure this method is acceptable in your area.) If a de-energize via unit disconnect switch operation of the convenience outlet is desired, connect the source leads to the load side of the unit disconnect. On a unit without a unit-mounted disconnect, connect the source leads to compressor contactor C and indoor fan contactor IFC pressure lugs with unit field power leads.

Field power wires are connected to the unit at line-side pressure lugs on compressor contactor C and TB1 (see wiring diagram label for control box component arrangement) or at factory-installed option non-fused disconnect switch. Max wire size is #4 AWG (copper only).

NOTE: TEST LEADS - Unit may be equipped with short leads (pigtails) on the field line connection points on contactor C or optional disconnect switch. These leads are for factory run-test purposes only; remove and discard before connecting field power wires to unit connection points. Make field power connections directly to line connection pressure lugs only.

⚠ WARNING

FIRE HAZARD

Failure to follow this warning could result in intermittent operation or performance satisfaction.

Do not connect aluminum wire between disconnect switch and condensing unit. Use only copper wire. (See Fig. 8.)

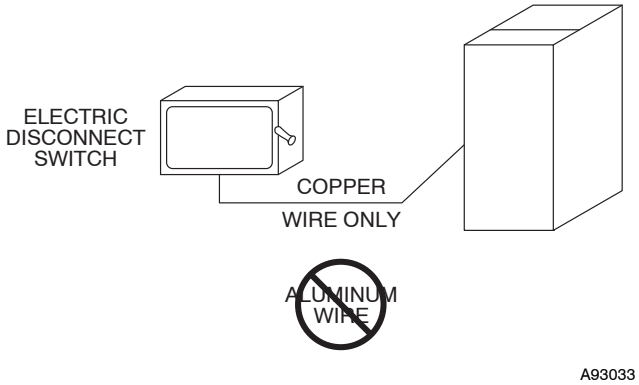

Fig. 8 - Disconnect Switch and Unit

Units Without Factory-Installed Disconnect —

When installing units, provide a disconnect switch per NEC (National Electrical Code) of adequate size. Disconnect sizing data is provided on the unit informative plate. Locate on unit cabinet or within sight of the unit per

national or local codes. Do not cover unit informative plate if mounting the disconnect on the unit cabinet.

Units with Factory-Installed Disconnect —

The factory-installed option disconnect switch is located in a weatherproof enclosure located under the main control box. The manual switch handle is accessible through an opening in the access panel.

All Units -

All field wiring must comply with NEC and all local codes. Size wire based on MCA (Minimum Circuit Amps) on the unit informative plate. See Fig. 9 for power wiring connections to the unit power terminal block and equipment ground. Maximum wire size is #4 ga AWG per pole.

Provide a ground-fault and short-circuit over-current protection device (fuse or breaker) per NEC Article 440 (or local codes). Refer to unit informative data plate for MOCP (Maximum Over-current Protection) device size.

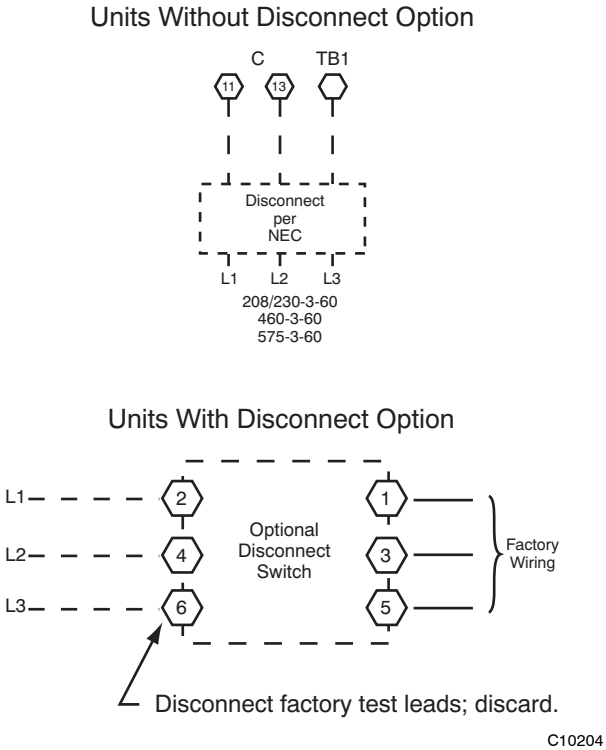

Fig. 9 - Power Wiring Connections

All units except 208/230-v units are factory wired for the voltage shown on the nameplate. If the 208/230-v unit is to be connected to a 208-v power supply, the control transformer must be rewired by moving the black wire with the 1/4-in. female spade connector from the 230-v connection and moving it to the 208-v 1/4-in. male terminal on the primary side of the transformer. Refer to unit label diagram for additional information.

All field wiring must comply with the NEC and local requirements.

Voltage and Current Balance —

Voltage to compressor terminals during operation must be within voltage range indicated on unit nameplate. See Table 8. On 3-phase units, voltages between phases must be balanced within 2% and the current within 10%. Use the formula shown in the legend for Table 8, Note 5 (see page 14) to determine the percent of voltage imbalance. Operation on improper line voltage or excessive phase imbalance constitutes abuse and may cause damage to electrical components. Such operation would invalidate any applicable Carrier warranty.

Convenience Outlets

⚠ WARNING

ELECTRICAL OPERATION HAZARD

Failure to follow this warning could result in personal injury or death.

Units with convenience outlet circuits may use multiple disconnects. Check convenience outlet for power status before opining unit for service. Locate its disconnect switch, if appropriate, and open it. Tag-out this switch, if necessary.

Two types of convenience outlets are offered on 38AUQ models: Non-powered and unit-powered. Both types provide a 125-volt GFCI (ground-fault circuit-interrupter) duplex receptacle rated at 15-A behind a hinged waterproof access cover, located on the end panel of the unit. See Fig. 10.

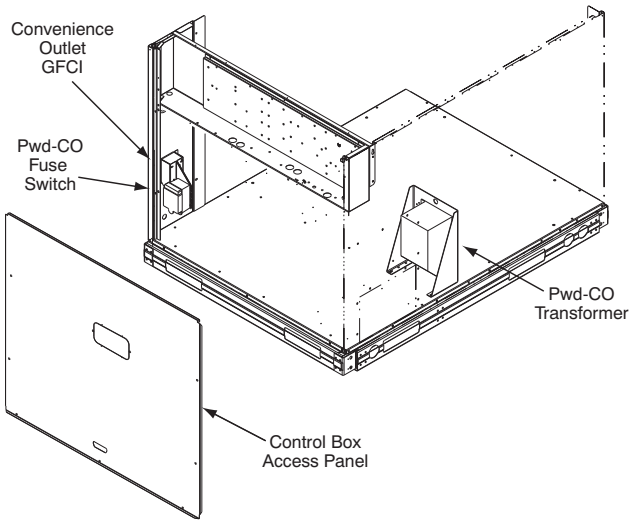

Fig. 10 - Convenience Outlet Location

Non-powered type: This type requires the field installation of a general-purpose 125-volt 15-A circuit powered from a source elsewhere in the building. Observe national and local codes when selecting wire size, fuse or breaker requirements and disconnect switch size and location. Route 125-v power supply conductors into the bottom of the utility box containing the duplex receptacle.

Unit-powered type: A unit-mounted transformer is factory-installed to stepdown the main power supply voltage to the unit to 115-v at the duplex receptacle. This option also includes a manual switch with fuse, located in

a utility box and mounted on a bracket behind the convenience outlet; access is through the unit's control box access panel. See Fig. 10.

The primary leads to the convenience outlet transformer are not factory-connected. Selection of primary power source is a customer-option. If local codes permit, the transformer primary leads can be connected at the line-side terminals on the unit-mounted non-fused disconnect or HACR breaker switch; this will provide service power to the unit when the unit disconnect switch or HACR switch is open. Other connection methods will result in the convenience outlet circuit being de-energized when the unit disconnect or HACR switch is open. See Fig. 11.

Duty Cycle: The unit-powered convenience outlet has a duty cycle limitation. The transformer is intended to provide power on an intermittent basis for service tools, lamps, etc; it is not intended to provide 15-amps loading for continuous duty loads (such as electric heaters for overnight use). Observe a 50% limit on circuit loading above 8-amps (i.e., limit loads exceeding 8-amps to 30 minutes of operation every hour).

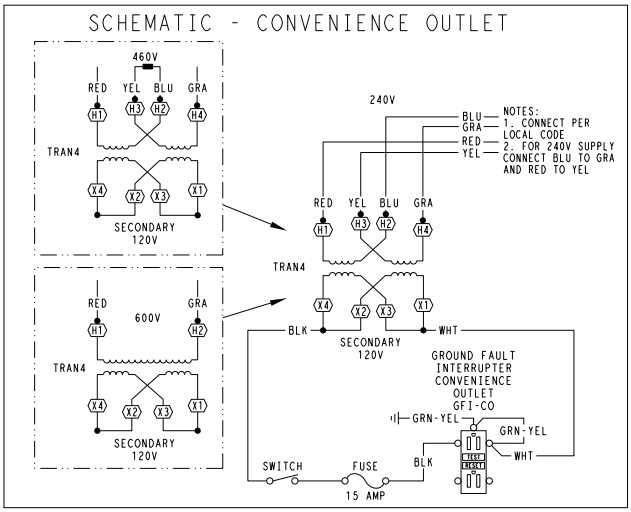

C10206

UNIT VOLTAGE	CONNECT AS	PRIMARY CONNECTIONS	TRANSFORMER TERMINALS
208, 230	240	L1: RED + YEL L2: BLU + GRA	H1 + H3 H2 + H4
460	480	L1: RED Splice BLU + YEL L2: GRA	H1 H2 + H3 H4
575	600	L1: RED L2: GRA	H1 H2

Fig. 11 - Powered Convenience Outlet Wiring

Test the GFCI receptacle by pressing the TEST button on the face of the receptacle to trip and open the receptacle. Check for proper grounding wires and power line phasing if the GFCI receptacle does not trip as required. Press the RESET button to clear the tripped condition.

Fuse on power type: The factory fuse is a Bussman "Fusetron" T-15, non-renewable screw-in (Edison base) type plug fuse.

Using unit-mounted convenience outlets: Units with unit-mounded convenience outlet circuits will often require that two disconnects be opened to de-energize all power to the unit. Treat all units as electrically energized until the convenience outlet power is also checked and de-energization is confirmed. Observe National Electrical Code Article 210, Branch Circuits, for use of convenience outlets.

Installing Weatherproof Cover

A weatherproof while-in-use cover for the factory installed convenience outlets is now required by UL standards. This cover cannot be factory mounted due its depth; it must be installed at unit installation. For shipment, the convenience outlet is covered with a blank cover plate.

The weatherproof cover kit is shipped in the unit's control box. The kit includes the hinged cover, a backing plate and gasket.

DISCONNECT ALL POWER TO UNIT AND CONVENIENCE OUTLET.

Remove the blank cover plate at the convenience outlet; discard the blank cover.

Loosen the two screws at the GFCI duplex outlet, until approximately $^1/_2$in (13 mm) under screw heads are exposed. Press the gasket over the screw heads. Slip the backing plate over the screw heads at the keyhole slots and align with the gasket; tighten the two screws until snug (do not overtighten).

Mount the weatherproof cover to the backing plate as shown in Fig. 12. Remove two slot fillers in the bottom of the cover to permit service tool cords to exit the cover. Check for full closing and latching.

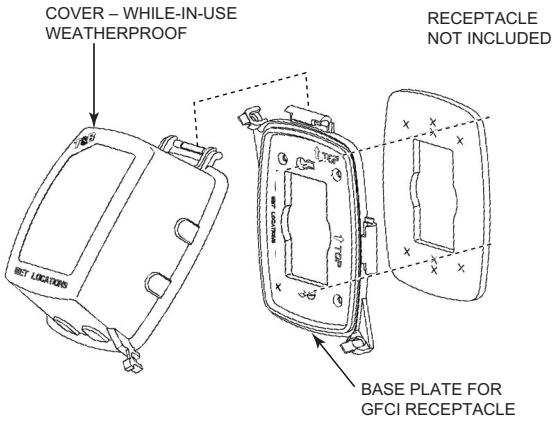

C09022

Fig. 12 - Weatherproof Cover Installation

NOTE: Check all factory and field electrical connections for tightness.

Field Control Wiring —

38AUQ unit control voltage is 24 v. See Fig. 19 for typical field control connections and the unit's label diagram for field-supplied wiring details. Route control wires to the 38AUQ unit through the opening in unit's end panel to the connections terminal board in the unit's control box.

Remainder of the system controls connection will vary according to the specific construction details of the indoor section. Fig. 13 depicts typical connections to a Carrier 40RUQ fan coil unit. Plan for field connections carefully and install control wiring correctly per the project plan. Additional components and supplemental transformer accessory may be required.

The 38AUQ unit requires an external temperature control device. This device can be a thermostat (field-supplied) or a PremierLink controller (available as a field-installed accessory, for use on a Carrier Comfort Network or as a stand alone control).

Thermostat —

Install a Carrier-approved accessory thermostat according to installation instructions included with the accessory. For complete economizer function, select a two—stage cooling thermostat.

38AUQ unit control system requires a conventional electric thermostat that will energize the G terminal on a call for Cool and Heat mode. Do not configure the thermostat a a heat pump type; Heat mode will not work with a thermostat configured for heat pump.

Locate the thermostat accessory on a solid wall in the conditioned space to sense average temperature in accordance with the thermostat installation instructions.

If the thermostat contains a logic circuit requiring 24-v power, use a thermostat cable or equivalent single leads of different colors with minimum of five leads between the 38AUQ unit's outdoor unit connection board and the indoor unit connection board. If the thermostat does not require a 24-v source (no "C" connection required), use a thermostat cable or equivalent with minimum of four leads. One additional lead is required between the indoor unit connection board and the thermostat for terminal G. If the accessory electric heat is used, one additional wire is required between the indoor unit connection board and the thermostat for terminal W2. Check the thermostat installation instructions for additional features which might require additional conductors in the cable.

For wire runs up to 50 ft. (15 m), use no. 18 AWG (American Wire Gage) insulated wire (35°C minimum). For 50 to 75 ft. (15 to 23 m), use no. 16 AWG insulated wire (35°C minimum). For over 75 ft. (23 m), use no. 14 AWG insulated wire (35°C minimum). All wire sizes larger than no. 18 AWG cannot be directly connected to the thermostat and will require a junction box and splice at the thermostat.

PremierLink (accessory installation) – Refer to Form 33CS-68SI (or later) for details on connecting the PremierLink controller and its various sensors.

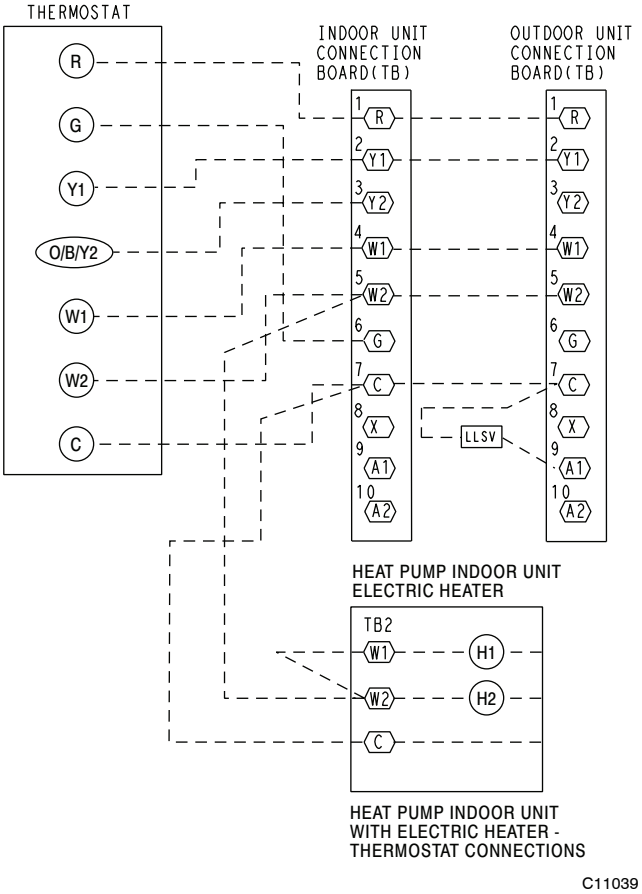

Fig. 13 - Typical Remote Thermostat Connections

External Control Devices —

The 38AUQ control transformers provide 24-v NEC Class 2 power sources to energize external control devices. These devices will include the indoor fan motor contactor (or control relay). These devices may also include a liquid line solenoid valve, economizer control relay, supplemental electric heater contactors or control relays and other devices selected by system designer.

Control transformer TRAN1 provides control power through terminal R to C on the 38AUQ's outdoor unit field connection terminal strip for supply fan motor interlock. This source may also be used to energize economizer control relay and electric heater contactors or relays. Maximum available power is 50 va. Check concurrent loadings by external control devices. If the maximum concurrent loading exceeds 50 va, purchase and install the accessory Transformer-Relay package (available for 208/230 and 460-v units).

Control transformer TRAN2 provides control power through terminal A1 (9) to C for the liquid line solenoid. Maximum available power is 15 va. This output is switched ON/OFF by the Solenoid Valve Relay (field-supplied, use Carrier Service Part PNO HN61PC005).

Table 8 – Electrical Data — 38AUQ*07-12 60 Hz Units

WITHOUT POWERED CONVENIENCE OUTLET											
UNIT	V–Ph–Hz	VOLTAGE RANGE‡		COMPRESSOR 1		OFM (ea)		POWER SUPPLY		DISCONNECT SIZE	
		MIN	MAX	RLA	LRA	QTY	FLA	MCA	Fuse or HACR Brkr	FLA	LRA
38AUQ*07 Units produced on or after 02/09/2015	208/230–3–60	187	253	19.6	136	2	1.5	28/28	45/45	26/26	142/142
	460–3–60	414	506	8.2	66	2	0.8	112	20	11	70
	575–3–60	518	633	6.6	55	2	0.7	10	15	9	59
38AUQ*07 Units produced on or prior to 02/08/2015	208/230–3–60	187	253	19.0	123	2	1.5	26.8/26.8	45/45	25/25	129/129
	460–3–60	414	506	9.7	62	2	0.8	13.7	20	13	66
	575–3–60	518	633	7.4	50	2	0.7	10.7	15	10	54
38AUQ*08	208/230–3–60	187	253	25.2	164	2	1.5	35/35	50/50	32/32	170/170
	460–3–60	414	506	12.7	100	2	0.8	18	30	16	104
	575–3–60	518	633	11.0	78	2	0.7	16	25	14	82
38AUQ*12	208/230–3–60	187	253	30.8	225	2	1.5	42/42	60/60	39/39	231/231
	460–3–60	414	506	16.7	114	2	0.8	23	30	21	118
	575–3–60	518	633	12.8	80	2	0.7	18	30	16	84

WITH POWERED CONVENIENCE OUTLET											
UNIT	V–Ph–Hz	VOLTAGE RANGE‡		COMPRESSOR 1		OFM (ea)		POWER SUPPLY		DISCONNECT SIZE	
		MIN	MAX	RLA	LRA	QTY	FLA	MCA	Fuse or HACR Brkr	FLA	LRA
38AUQ*07 Units produced on or after 02/09/2015	208/230–3–60	187	253	19.6	136	2	1.5	33/33	50/50	32/32	147/147
	460–3–60	414	506	8.2	66	2	0.8	15	20	14	72
	575–3–60	518	633	6.6	55	2	0.7	12	15	11	61
38AUQ*07 Units produced on or prior to 02/08/2015	208/230–3–60	187	253	19.0	123	2	1.5	31.6/31.6	50/50	31/31	134/134
	460–3–60	414	506	9.7	62	2	0.8	15.9	25	16	68
	575–3–60	518	633	7.4	50	2	0.7	12.4	15	12	56
38AUQ*08	208/230–3–60	187	253	25.2	164	2	1.5	40/40	60/60	38/38	175/175
	460–3–60	414	506	12.7	100	2	0.8	20	30	19	106
	575–3–60	518	633	11.0	78	2	0.7	17	25	16	84
38AUQ*12	208/230–3–60	187	253	30.8	225	2	1.5	47/47	60/60	44/44	236/236
	460–3–60	414	506	16.7	114	2	0.8	25	30	24	120
	575–3–60	518	633	12.8	80	2	0.7	20	30	18	86

Legend and Notes for Table 8

LEGEND:

BRKR	–	Circuit breaker
CO	–	Convenient outlet
FLA	–	Full Load Amps
LRA	–	Locked Rotor Amps
MCA	–	Minimum Circuit Amps Protection
NEC	–	National Electrical Code
PWRD CO	–	Powered convenient outlet
RLA	–	Rated Load Amps
UNPWR CO	–	Unpowered convenient outlet

NOTES:

1. In compliance with NEC requirements for multimotor and combination load equipment (refer to NEC Articles 430 and 440), the overcurrent protective device for the unit shall be fuse or HACR breaker. Canadian units may be fuse or circuit breaker.
2. The MCA values are calculated in accordance with The NEC. Article 440.
3. Motor RLA and LRA values are established in accordance with Underwriters' Laboratories (UL). Standard 1995.
4. The 575–v units are UL, Canada–listed only.
5. **Unbalanced 3-Phase Supply Voltage**
   Never operate a motor where a phase imbalance in supply voltage is greater than 2%. Use the following formula to determine the percentage of voltage imbalance.

Example: Supply voltage is 230-3-60

$$\text{\% Voltage Imbalance} = 100 \times \frac{\text{max voltage deviation from average voltage}}{\text{average voltage}}$$

AB = 224 v
BC = 231 v
AC = 226 v

$$\text{Average Voltage} = \frac{(224 + 231 + 226)}{3} = \frac{681}{3}$$

$$= 227$$

Determine maximum deviation from average voltage.
(AB) 227 – 224 = 3 v
(BC) 231 – 227 = 4 v
(AC) 227 – 226 = 1 v
Maximum deviation is 4 v.
Determine percent of voltage imbalance.

$$\text{\% Voltage Imbalance} = 100 \times \frac{4}{227}$$

$$= 1.76\%$$

This amount of phase imbalance is satisfactory as it is below the maximum allowable 2%.

IMPORTANT: If the supply voltage phase imbalance is more than 2%, contact your local electric utility company immediately.

PRE-START-UP

IMPORTANT: Before beginning Pre-Start-Up or Start-Up, review Start-Up Checklist at the back of this book. The Checklist assures proper start-up of a unit and provides a record of unit condition, application requirements, system information, and operation at initial start-up.

⚠ CAUTION

UNIT DAMAGE HAZARD

Failure to follow this caution may result in equipment damage.

Do not attempt to start the heat pump system, even momentarily, until the following steps have been completed. Compressor damage may result.

System Check

1. Check all indoor section and other equipment auxiliary components. Consult the manufacturer's instructions regarding any other equipment connected to the condensing unit. If the unit has field-installed accessories, be sure all are properly installed and correctly wired. If used, the airflow switch must be properly installed.
2. Be sure the unit is properly leak checked and dehydrated.
3. Check tightness of all electrical connections.
4. Open the liquid line and suction line service valves.
5. Be sure the unit is properly charged. See "Preliminary Charge", below.
6. The electrical power source must agree with the unit's nameplate rating.
7. The crankcase heater must be firmly attached to the compressor crankcase. Be sure the crankcase is warm (heater must be on for 24 hours before starting compressor).

Turn On Crankcase Heater

Turn on the crankcase heater for 24 hours before starting the unit to be sure all the refrigerant is out of the oil. To energize the crankcase heater, proceed as follows:

1. Set the space thermostat set point above the space temperature so there is no demand for cooling.
2. Close the field disconnect.

Preliminary Charge

Before starting the unit, charge liquid refrigerant into the high side of the system through the liquid service valve. The amount of refrigerant added must be at least 80% of the operating charge listed in the Physical Data table (Tables 1A and 1B on pages 4 and 5). Allow high and low side pressures to equalize before starting compressor. If pressures do not equalize readily, charge vapor on low side of system to assure charge in the evaporator. Refer to GTAC II, Module 5, Charging, Recover, Recycling, and Reclamation for liquid charging procedures.

⚠ CAUTION

UNIT DAMAGE HAZARD

Failure to follow this caution may result in equipment damage.

Prior to starting compressor, a preliminary charge of refrigerant must be added to avoid possible compressor damage.

START-UP

38AUQ Units

The compressor crankcase heater must be on for 24 hours before start-up. After the heater has been on for 24 hours, the unit can be started. If no time elapsed since the preliminary charge step was completed, it is unnecessary to wait the 24-hour period.

Preliminary Checks —

1. Check that electric power supply agrees with unit nameplate data.
2. Verify that the compressor crankcase heater is securely in place.
3. Check that the compressor crankcase heater has been on at least 24 hours.
4. Recheck for leaks using the procedure outlined in the Pre-Start-Up section, Leak Test and Dehydration. If any leaks are detected, repair as required. Evacuate and dehydrate as described in the Leak Test and Dehydration section.
5. Ensure that the preliminary charge has been added as described in the Pre-Start-Up section, Preliminary Charge.
6. All internal wiring connections must be tight, and all barriers and covers must be in place.

NOTE: The units are factory charged with the required amount of oil. If recharging in required, use Emkarate RL 32-3MAF.

Compressor Rotation —

On 3-phase units with scroll compressors, it is important to be certain that the compressor is rotating in the proper direction. 38AUQ units are equipped with a Comfort Alert Diagnostic Module (CADM). Alert Code 7 indicates reverse power phasing.

To correct phase order:

1. Turn off power to the unit, tag disconnect.
2. Reverse any two of the unit power leads.
3. Reapply power to the compressor, verify correct pressures.

To verify the compressor is rotating in the proper direction:

1. Connect service gages to the suction and liquid pressure fittings.
2. Energize the compressor.
3. The suction pressure should drop and the liquid pressure should rise, as is normal on any start-up.

Compressor Overload —

This overload interrupts power to the compressor when either the current or internal motor winding temperature becomes excessive, and automatically resets when the internal temperature drops to a safe level. This overload may require up to 60 minutes (or longer) to reset. If the internal overload is suspected of being open, disconnect the electrical power to the unit and check the circuit through the overload with an ohmmeter or continuity tester.

Advanced Scroll Temperature Protection (ASTP) —

A label located above the terminal box identifies Copeland Scroll compressor models that contain this technology. See Fig. 14. Advanced Scroll Temperature Protection (ASTP) is a form of internal discharge temperature protection, that unloads the scroll compressor when the internal temperature reaches approximately 300°F. At this temperature, an internal bi-metal disk valve opens and causes the scroll elements to separate, which stops compression. Suction and discharge pressures balance while the motor continues to run. The longer the compressor runs unloaded, the longer it must cool before the bi-metal disk resets. See Fig. 15.

C10080

Fig. 14 - Advanced Scroll Temperature Protection Label

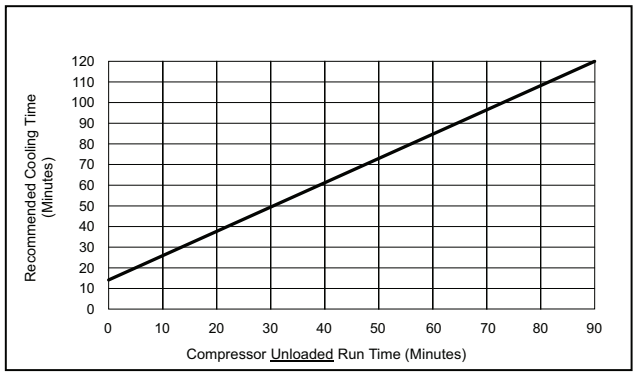

*Times are approximate.

NOTE: Various factors, including high humidity, high ambient temperature, and the presence of a sound blanket will increase cool-down times.

C10081

Fig. 15 - Recommended Minimum Cool-Down Time After Compressor is Stopped

To manually reset ASTP, the compressor should be stopped and allowed to cool. If the compressor is not stopped, the motor will run until the motor protector trips, which occurs up to 90 minutes later. Advanced Scroll Temperature Protection will reset automatically before the motor protector resets, which may take up to 2 hours.

Start Unit —

Disconnect the field low voltage lead at the 38AUQ unit's R terminal to prevent compressor operation. Close the 38 AUQ disconnect switch. Only the crankcase heater will be energized.

Reconnect the field low voltage lead to the 38AUQ unit's R terminal. Adjust thermostat setting for Cool below space temperature.

⚠ CAUTION

UNIT DAMAGE HAZARD

Failure to follow this caution may result in equipment damage.

Never charger liquid into the low-pressure side of the system. Do not overcharge. During charging or removal of refrigerant, be sure indoor-fan system is operating. Ensure both outdoor fan motors re running; bypass any Motormaster function.

Adjust Refrigerant Charge —

The unit must be charged in Cooling mode only. Refer to Cooling Charging Charts, Fig. 16 through Fig. 18. For applications with line lengths greater than 100 ft, contact Carrier representative. Vary refrigerant until the conditions of the chart are met. The charts are based on charging the units to the correct subcooling for the various operating conditions. Accurate pressure gage and temperature sensing device are required. Connect the pressure gage to the service port on the liquid line service valve. Mount the temperature sensing device on the liquid line close to the liquid line service valve, and insulate it so that outdoor ambient temperature does not affect the reading. Indoor airflow must be within the unit's normal operating range. Operate the unit for a minimum of 15 minutes. Ensure that pressure and temperature readings have stabilized. Plot the liquid pressure and temperature on chart and add or reduce the charge to meet the curve. Adjust the charge to conform with the charging chart, using the liquid pressure and temperature to read the chart.

Final Checks —

Ensure that all safety controls are operating, control panel covers are on, and the service panels are in place.

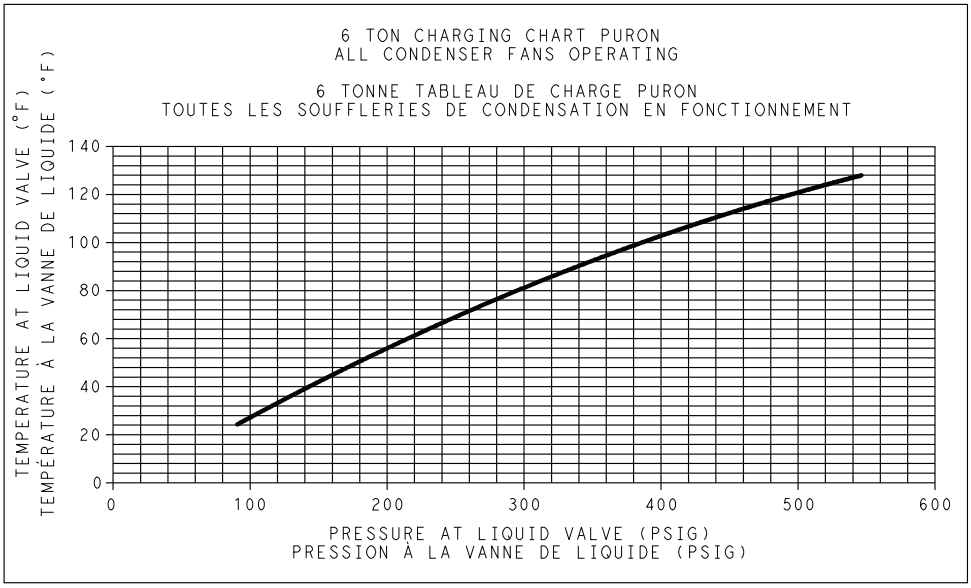

C11040

Fig. 16 - 38AUQ*07 Charging Chart

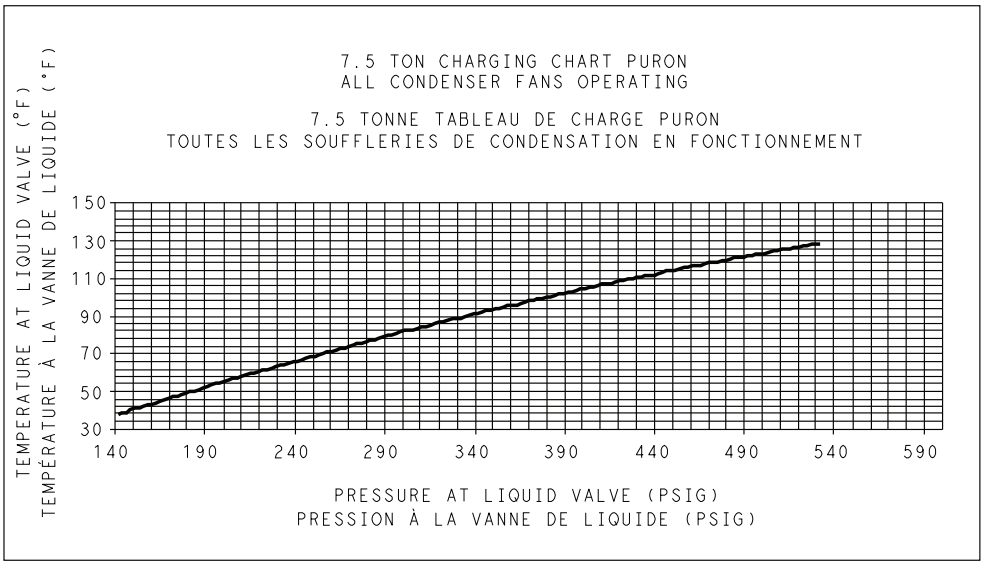

C11041

Fig. 17 - 38AUQ*08 Charging Chart

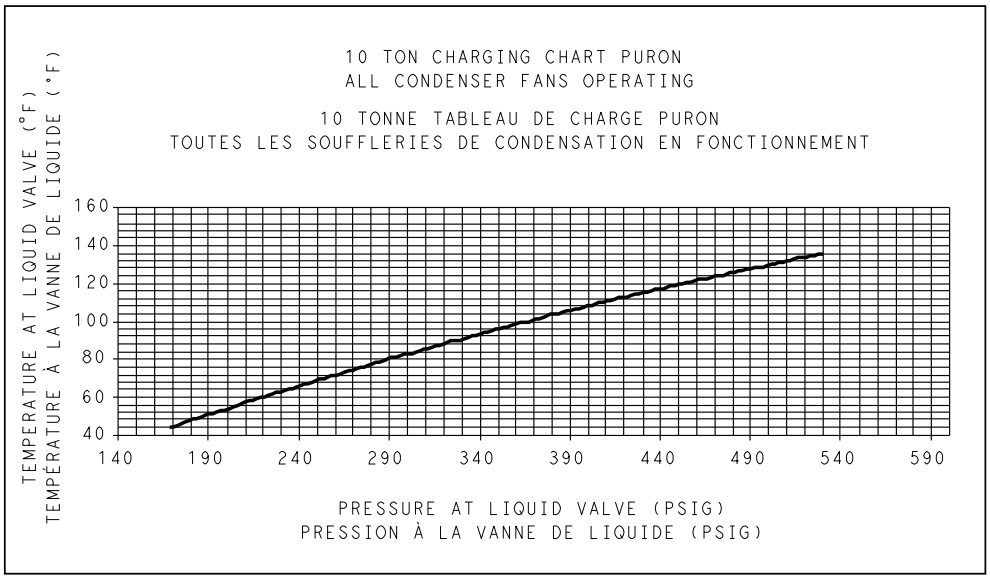

C11042

Fig. 18 - 38AUQ*12 Charging Chart

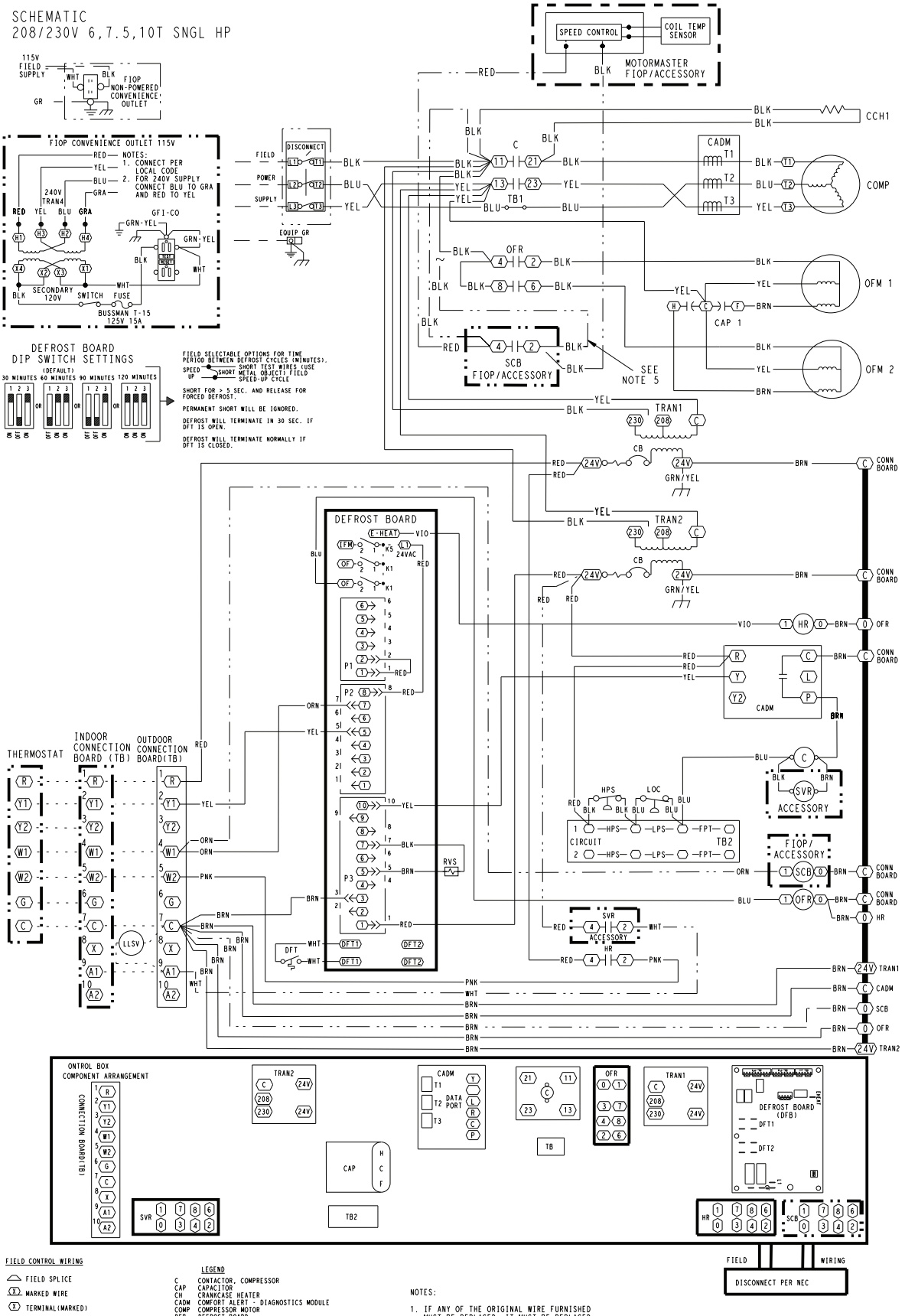

Fig. 19 - 38AUQ Wiring Diagram (208/230-3-60 shown)

OPERATING SEQUENCE

Base Unit Controls

Indoor (Supply) Fan —

The indoor fan contactor (IFC) is remotely located at the fan coil or fan section. If the thermostat fan operation is selected as Continuous, the IFC is energized and the indoor (supply) fan motor runs continuously. If the thermostat fan operation is selected as Automatic, the IFC will be energized on a call for Cooling or Heating; indoor (supply) fan motor runs. When thermostat is satisfied, the IFC is de-energized and indoor (supply) fan motor stops.

Cooling, Unit Without Economizer —

When thermostat calls for Cooling, terminal Y1 is energized. The 38AUQ's Defrost Board (DFB) receives this input at P2-5. DFB issues 24-v outputs at OF, P3-7 (RVS1) and P3-10 (COMP1). The OF output energizes outdoor fan relay (OFR); both outdoor fan motors start and run. The output RVS1 energizes the reversing valve solenoid (RVS); Reversing valve switches to Cooling position.

Output PL3-10 (COMP1, 24-v) is received at CADM terminal Y. If anti-recycle time delay period has not expired, safety pressure switches are open, and/or lockout alarms are active, CADM relay will remain open, preventing compressor start. When safety pressure switches are closed and CADM time delay expires, the CADM relay closes, energizing Solenoid Valve Relay SVR and compressor contactor C. SVR contacts close, energizing the external liquid line solenoid valve. Solenoid valve LLSV opens. Compressor contactor C closes, energizing the compressor motor. Compressor starts and system runs in Cooling mode.

When space cooling load is satisfied, terminal Y1 is de-energized. Compressor and outdoor fan motors stop. Liquid line solenoid valve LLSV is de-energized and valve closes. CADM begins its three-minute anti-recycle time delay.

If either the Loss of Charge (LOC) Switch or High Pressure Switch (HPS) opens while Y1 remains energized, the compressor contactor C and relay SVR are de-energized; compressor stops and liquid line solenoid is de-energized (valve closes). CADM initiates a TRIP event (cooling demand sensed at CADM terminal Y but no current is measured at T1, T2, T3 motor sensors); CADM relay opens and RED LED is illuminated. TRIP condition maintains lockout of compressor operation until CADM is manually reset. Reset CADM by cycling unit main power.

Reversing valve solenoid (RVS) is energized in Cooling modes. This solenoid will remain energized until the next Heating mode is initiated.

Cooling, Unit With Economizer —

Refer to fan coil unit installation instructions and economizer accessory installation instructions for operating sequences when system is equipped with accessory economizer.

Heating —

When the thermostat calls for first stage heating, terminal W1 is energized. The 38AUQ's Defrost Board (DFB) receives this input at P2-7. The DFB removes the output at P3-7 (RVS1); the reversing valve solenoid is de-energized and the reversing valve moves to Heating position.

DFB issues outputs at OF and P3-10 (COMP1). Outdoor fan relay OFR is energized; both outdoor fan motors run.

Output PL3-10 (COMP1, 24-v) is received at CADM terminal Y. If anti-recycle time delay period has not expired, safety pressure switches are open, and/or lockout alarms are active, CADM relay will remain open, preventing compressor start. When safety pressure switches are closed and CADM time delay expires, the CADM relay closes, energizing Solenoid Valve Relay SVR and compressor contactor C. SVR contacts close, energizing the external liquid line solenoid valve. Solenoid valve LLSV opens. Compressor contactor C closes, energizing the compressor motor. Compressor starts and system runs in Heating mode, providing Stage 1 Heat.

When the space heating load is satisfied terminal W1 is de-energized. Compressor and outdoor fan operations stop. Liquid line solenoid LLSV is de-energized and valve closes. CADM begins its three-minute anti-recycle time delay.

If either the Loss of Charge (LOC) Switch or High Pressure Switch (HPS) opens while, the compressor contactor C and relay SVR are de-energized; compressor stops and liquid line solenoid is de-energized (valve closes). CADM initiates a TRIP event (compressor demand sensed at CADM terminal Y but no current is measured at T1, T2, T3 motor sensors); CADM relay opens and RED LED is illuminated. TRIP condition maintains lockout of compressor operation until CADM is manually reset. Reset CADM by cycling unit main power.

Reversing valve solenoid remains de-energized until the next Cooling cycle is initiated.

Defrost Cycle —

During the Heating Mode, frost and ice can develop on the outdoor coil. Defrost sequence will clear the frost and ice from the coil by briefly reversing the Heating sequence periodically.

A window to test for a need to run the Defrost cycle opens at a fixed period after the end of the last Defrost cycle or the previous test window closed. The window period is determined by the configuration settings on the DFB's DIP switches (see unit wiring diagram).

If the outdoor coil's Defrost Thermostat switch (DFT) is closed (shorting DFB terminals DFT1 and DFT1), the Defrost cycle will start. Output at OF is removed; outdoor fans stop during the Defrost cycle. Output P3–7 (RVS1) is energized; reversing valve solenoid RVS is energized and reversing valve changes position, placing the circuit in a Cooling mode flow, directing hot gas into the outdoor coil where its heat melts the frost and loosens the ice on the coil face.

During the Defrost cycle, output EHEAT is also energized (if not already energized by a thermostat W2 demand); supplemental heater will be energized. During the Defrost Cycle, LED1 on the DFB will be illuminated. The Defrost cycle ends when DFT opens (as liquid temperature exiting the coil rises above DFT setpoint) or the defrost cycle runs for 10 minutes. Output at EHEAT is removed; supplemental heater will be de-energized (unless thermostat has a W2 demand). Output at OF is restored; outdoor fans start again. Output P3–7 (RVS1) is removed; reversing valve returns to Heating position.

Defrost cycle is fixed at a maximum 10 minute duration limit. The period to test and initiate a Defrost cycle can be configured for 30, 60, 90 or 120 minutes.

Supplemental Heat/Emergency Heat —

Supplemental heat type is determined by 40RUQ indoor unit options and accessories. This heat is initiated when the indoor unit W2 terminal is energized by the thermostat. (Or as detailed in "Defrost Cycle" above.) The thermostat may energize W2 as supplemental (2nd stage) heat at higher space heating demand, or when selected as emergency heat mode. When the space heating demand decreases below the 2nd stage limit, or emergency heat is turned off, W2 is de-energized, and supplemental heat is turned off.

Cooling and Heating Shutdown —

Partial or complete cooling or heating functions may shutdown caused by loss of main power, open pressure switches, diagnostic alarms, or open internal compressor protections. See Service section for further details.

ROUTINE SYSTEM MAINTENANCE

These items should be part of a routine maintenance program, to be checked every month or two, until a specific schedule for each can be identified for this installation:

Quarterly Inspection
(and 30 days after initial start) —

Indoor section

- Coil cleanliness checked.
- Return air filter replacement
- Belt tension checked
- Belt condition checked
- Pulley alignment checked
- Fan shaft bearing locking collar tightness checked
- Condensate drain checked
- Blower motor amperage

Outdoor Section

- Fan motor mounting bolts tightness
- Compressor mounting bolts
- Fan blade positioning
- Control box cleanliness and wiring condition
- Wire terminal tightness
- Refrigerant charge level

Economizer or Outside Air Damper

- Inlet filters condition
- Check damper travel (economizer)
- Check gear and dampers for debris and dirt

SERVICE

Refrigeration System

⚠ CAUTION

EQUIPMENT DAMAGE HAZARD

Failure to follow this caution may result in damage to equipment .

This system uses Puron® refrigerant which has higher pressures than R-22 and other refrigerants. No other refrigerant may be used in this system. Gage set, hoses, and recovery system must be designed to handle Puron®. If you are unsure consult the equipment manufacturer.

38AUQ

Compressor Oil —

⚠ CAUTION

EQUIPMENT DAMAGE HAZARD

Failure to follow this caution may result in damage to equipment .

The compressor in a Puron system uses a polyolester (POE) oil. This oil is extremely hygroscopic, meaning it absorbs water readily. POE oils can absorb 15 times as much water as other oils designed for HCFC and CFC refrigerants. Take all necessary precautions to avoid exposure of the oil to the atmosphere.

Servicing Systems on Roofs with Synthetic Materials —

POE (polyolester) compressor lubricants are known to cause long term damage to some synthetic roofing materials. Exposure, even if immediately cleaned up, may cause embrittlement (leading to cracking) to occur in one year or more. When performing any service which may risk exposure of compressor oil to the roof, take appropriate precautions to protect roofing. Procedures which risk oil leakage include but are not limited to compressor replacement, repairing refrigerants leaks, replacing refrigerant components such as filter drier, pressure switch, metering device, coil, accumulator, or reversing valve.

Synthetic Roof Precautionary Procedure:

1. Cover extended roof working area with an impermeable polyethylene (plastic) drop cloth or tarp. Cover an approximate 10 x 10 ft (3.3 x 3.3 m) area.
2. Cover area in front of the unit service panel with a terry cloth shop towel to absorb lubricant spills and prevent run-offs, and protect drop cloth from tears caused by tools or components.
3. Place terry cloth shop towel inside unit immediately under component(s) to be serviced and prevent lubricant run-offs through the louvered openings in the base pan.
4. Perform required service.
5. Remove and dispose of any oil contaminated material per local codes.

Liquid Line Filter Drier —

The factory-provided reversible filter drier is specifically designed to operate with Puron®. Replace the filter drier with factory-authorized components only with a filter drier with desiccant made from 100% molecular sieve grade XH-11. Filter drier must be replaced whenever the refrigerant system is opened.

When removing a filter drier, use a tubing cutter to cut the drier from the system. **Do not unsweat a filter drier** from the system. Heat from unsweating will release moisture and contaminants from drier into system.

Field Refrigerant Access Ports —

Field service access to refrigerant pressures is through the access ports located at the service valves (see Figs 25, 27 and 29). These ports are $^1/_4$-in SAE Flare couplings with Schrader check valves and service caps. Use these ports to admit nitrogen to the field tubing during brazing, to evacuate the tubing and evaporator coil, to admit initial refrigerant charge into the low-side of the system and when checking and adjusting the system refrigerant charge. When service activities are completed, ensure the service caps are in place and secure; check for leaks. If the Schrader check valve must be removed and re-installed, tighten to 2-3 in-lbs (23-34 N-cm).

Outdoor Coil Metering Devices —

The metering devices are multiple fixed–bore devices (Acutrol™) swaged into the horizontal outlet tubes from the liquid header, located at the entrance to each outdoor coil circuit path. These are non–adjustable. Service requires replacing the entire liquid header assembly.

To check the outdoor coil, disconnect the outdoor fan motor. Start the circuit in a Heating Mode (jumper R to W1) and observe the frost pattern on the face of the outdoor coil. A frost pattern should develop uniformly across the face of the outdoor coil starting at each tube at the Acutrol nipple locations.

Failure to develop frost at an outlet tube can indicate a plugged or a missing orifice.

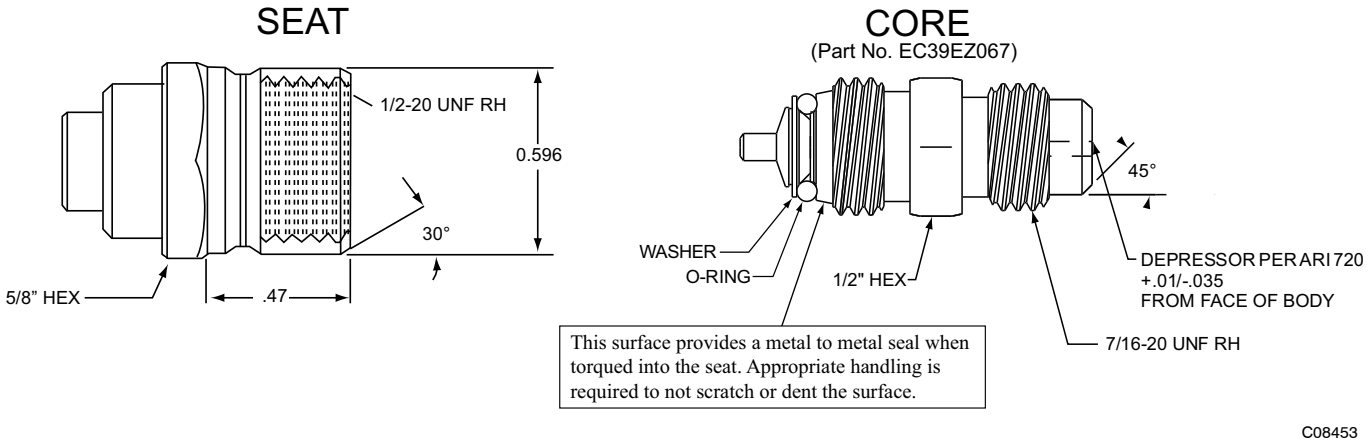

Fig. 20 - CoreMax Access Port Assembly

Refrigerant System Pressure Access Ports —

There are two access ports in each circuit - on the suction tube near the compressor and on the discharge tube near the compressor. These are brass fittings with black plastic caps. The hose connection fittings are standard 1/4 SAE Male Flare couplings.

The brass fittings are two-piece High Flow valves, with a receptacle base brazed to the tubing and an integral spring-closed check valve core screwed into the base. (See Fig. 20.) This check valve is permanently assembled into this core body and cannot be serviced separately; replace the entire core body if necessary. Service tools are available from RCD that allow the replacement of the check valve core without having to recover the entire system refrigerant charge. Apply compressor refrigerant oil to the check valve core's bottom o-ring. Install the fitting body with 96 +/-10 in-lbs of torque; do not overtighten.

Compressor Protection

Compressor Overcurrent —

The compressor has internal limbered motor protection.

Compressor Overtemperature Protection (IP) —

The compressor has an internal protector to protect it against excessively high discharge gas temperatures.

Crankcase Heater —

The heater prevents refrigerant migration and compressor oil dilution during shutdown whenever compressor is not operating. The heater is wired to cycle with the compressor; the heater is off when compressor is running, and on when compressor is off.

The crankcase heater will operate as long as the power circuit is energized. The main disconnect must be on to energize the crankcase heater.

IMPORTANT: Never open any switch or disconnect that energizes the crankcase heater unless unit is being serviced or is to be shut down for a prolonged period. After a prolonged shutdown on a service job, energize the crankcase heater for 24 hours before starting the compressor.

High Pressure Switch —

The system is provided with a high pressure switch mounted on the discharge line. The switch is stem-mounted and brazed into the discharge tube. Trip setting is 630 ± 10 psig (4344 ± 69 kPa) when hot. Reset is automatic at 505 ± 20 psig (3482 ± 140 kPa).

Loss of Charge Switch —

The system is protected against a loss of charge and low evaporator coil loading condition by a loss of charge switch located on the liquid line. The switch is stem-mounted. Loss of Charge Switch trip setting is 27 psig ± 3 psig (186 ±21 kPa). Reset is automatic at 44 ±5 psig (303 ± 35 kPa).

Outdoor Fan Motor Protection —

The outdoor fan motors are internally protected against overtemperature.

Control Circuit, 24-V —

The control circuit is protected against overcurrent conditions by circuit breakers mounted on control transformer TRAN1 and TRAN2. Reset is manual.

Commercial Defrost Control

The Commercial Defrost Control Board (DFB) coordinates thermostat demands for one stage cooling, first stage heating, emergency heating and defrost control with unit operating sequences. See Fig. 22 for board arrangement.

The DFB is located in the 38AUQ's main control box (see Fig. 21). All connections are factory-wired. Refer to Table 9 for details of DFB Inputs and Outputs.

Table 9 – 38AUQ Defrost Board I/O and Jumper Configurations

Inputs

Point Name	Type of I/O	Connection Pin Number	Unit Connection	Note
G Fan	DI, 24-vac	P2-3		Not used
Y1 Cool 1	DI, 24-vac	P2-5	TB-Y1	
W1 Heat 1	DI, 24-vac	P2-7	TB-W1	
R Power	24-vac	P3-1	TRAN2	
C Common	24-vac, ground	P3-3	TRAN2	
DFT1 Defrost Switch	DI, 24-vac	DFT-1 to DFT-1	DFB	

Outputs

Point Name	Type of I/O	Connection Pin Number	Unit Connection	Note
OF OD Fan	DO, 24-vac	OF	OFR	
RVS1	DO, 24-vac	P3-7 to P3-5	RVS1	Energize in COOL
COMP 1	DO, 24-vac	P3-10	CADM1-Y	
TB–W2	DO, 24-vac	E-HEAT	HC-1 (TB4-1)	

Configuration

Point Name	Type of I/O	Connection Pin Number	Unit Connection	Note
Select Jumper	24-vac	P1-1		
1 Compressor	24-vac	P1-2		

Speed-Up Configuration

Point Name	Type of I/O	Connection Pin Number	Unit Connection	Note
Speed-Up Jumper		JMP17		
Speed-Up Jumper		JMP18		

Jumper for 1-3 secs: Factory Test, defrost runs for 12 seconds or less
Jumper for 5-20 secs: Forced Defrost, defrost runs for 30 secs if DFT1 is open

DFB Power: 24-V at Pin P3-1, COM at P3-3 (required in all modes)

		MODE					
		COOL	OFF After COOL	HEAT-1	HEAT-2	OFF After HEAT-1	DEFROST During HEAT
Inputs	**Pin**						
Y1	P2-5	24-V	0-V	0-V	0-V	0-V	0-V
W1	P2-7	0-V	0-V	24-V	24-V	0-V	24-V
DFT	DFT1-DFT1	OPEN	OPEN	Note 1	Note 1	Note 1	CLOSED
Outputs	**Pin**						
OD Fans	OF	24-V	0-V	24-V	24-V	0-V	0-V
Rev Valve	P3-7	24-V	24-V	0-V	0-V	0-V	24-V
Compressor	P3-10	24-V	0-V	24-V	24-V	0-V	24-V
Electric Heat	E-HEAT	0-V	0-V	0-V	0-V Note 2	0-V	24-V
W2		0-V	0-V	0-V	24-V	0-V	0 or 24-V

Notes:

1. DFT may be OPEN or CLOSED during Heat mode operation, depending on outdoor coil temperature. Defrost mode cannot start until Time window opens in DFB Defrost mode logic.
2. Call for electric heat may originate at the space thermostat (space demand) or at the DFB during Defrost. Thermostat signal will also be present on 38AUQ's W2 terminal and the DFB's E–HEAT terminal.

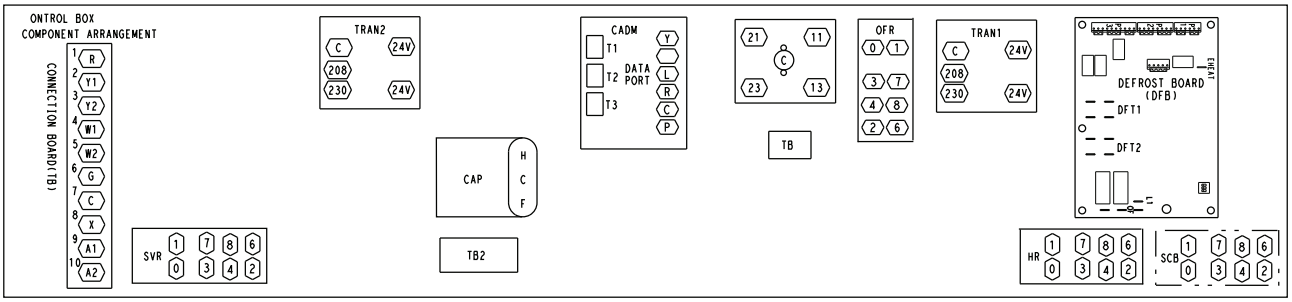

C11044

Fig. 21 - Defrost Control Board (DFB) Location

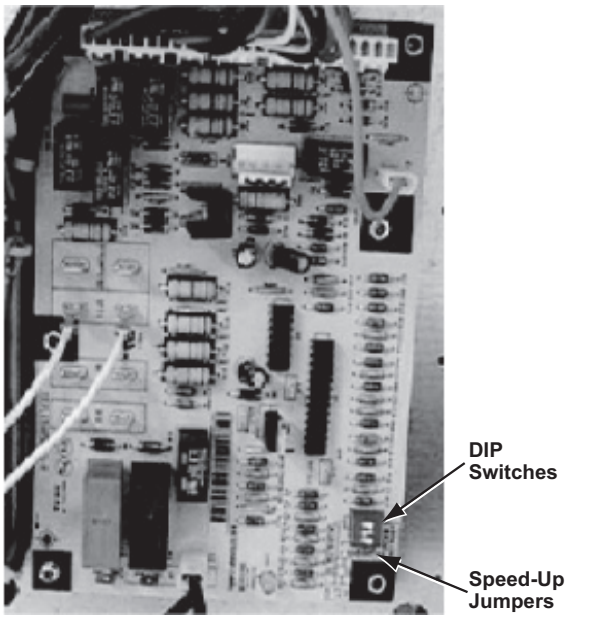

Fig. 22 - Defrost Control Board (DFB) Arrangement

Reversing Valve Control —

The DFB has an output for unit reversing valve control. Operation of the reversing valve is based on internal logic; this application does not use an "O" or "B" signal to determine reversing valve position. Reversing valve is energized during the Cooling stage and de-energized during Heating cycles. Once energized at the start of a Cooling stage, the reversing valve will remain energized until the next Heating cycle demand is received. Once de-energized at the start of a Heating cycle, the reversing valves will remain de-energized until the next Cooling stage is initiated.

Compressor Control —

The DFB receives inputs indicating Stage 1 Cooling and Stage 1 Heating from the space thermostat or unit control system (PremierLink); it generates commands to start compressor with or without reversing valve operation to produce Stage 1 Cooling, or Stage 1 Heating.

Defrost —

The defrost control mode is a time/temperature sequence. There are two time components: The continuous run period and the test/defrost cycle period. The temperature component is provided by the defrost thermostat (DFT1) mounted on the outdoor coil.

The continuous run period is a fixed time period between the end of the last defrost cycle (or start of the current Heating cycle) during which no defrost will be permitted. This period can be set at 30, 60, 90 or 120 minutes by changing the positions of DIP switches SW1 and SW2 (see Fig. 23 and Table 10). The default run period is 60 minutes.

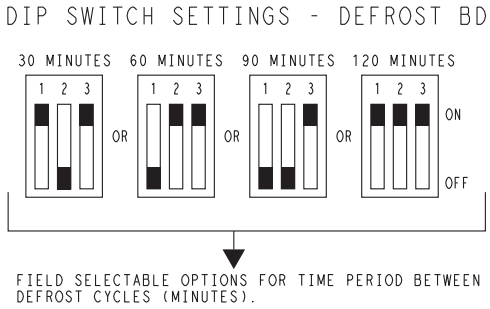

Fig. 23 - DIP Switch Settings — Defrost Board

At the end of the continuous run period, the defrost control will test for a need to defrost. DFT1 controls the start and termination of the defrost cycle. If DFT1 is still open, the defrost test/run window is closed and the control repeats the continuous run period. If DFT1 is closed, the defrost cycle is initiated. The defrost period will end when DFT1 opens (indicating the outdoor coil has been cleared of frost and ice) or a 10 minute elapsed period expires, whichever comes first.

At the end of the unit defrost cycle, the unit will be returned to Heating cycle for a full continuous run period.

If the space heating load is satisfied and compressor operation is terminated, the defrost control will remember where the run period was interrupted. On restart in Heating, the defrost control will resume unit operation at the point in the run period where it was last operating.

Defrost Thermostat —

The DFT is a temperature switch that monitors the surface temperature of the outdoor coil circuits. The switch is mounted on a vapor header tube above the vapor header's center check valve. See Fig. 24 for specific unit size locations.

During the Heating mode, this tube location contains cold evaporating fluid entering the outdoor coil's evaporator circuit; during Defrost/Cooling mode, this tube location contains condensed liquid or mixed-phase condensing refrigerant entering the subcooler circuit. A surface temperature below 30°F during Heating mode indicates the potential to form frost or ice on the outdoor coil; this condition will initiate a Defrost cycle at the next DFB test period. During the Defrost mode, this tube location will warm as the frost and ice on the outdoor coil are removed, until the switch opens and terminates the Defrost cycle.

The DFT switch closes on temperature drop at 30°F (-1°C) and resets open on temperature rise at 80°F (27°C).

Table 10 – Dip Switch Position

Switch No.	1	2		1	2		1	2		1	2		3	
1	■		1		■	1			1	■	■	1		On
0		■	0	■		0	■	■	0			0	■	Off
	30 minutes			60 minutes			90 minutes			120 minutes			Fan Delay	

Defrost Speedup Functions —

The DFB permits the servicer to speed-up the defrost cycle. There are two speed-up sequences: relative speed-up and an immediate forced defrost. Speed-up sequences are initiated by shorting jumper wires JMP17 and JMP18 together (see Fig. 22); use a straight-edge screwdriver.

Shorting the jumpers for a period of 1 to 3 secs reduces the defrost timer periods by a factor of 0.1 sec/minute. (For example, the 90 min run period is reduced to 9 secs.) The DFB will step the unit through a Heating cycle and a Defrost cycle using these reduced time periods. This mode ends after the Defrost cycle.

Shorting the jumpers for a period of 5 to 20 secs bypasses the remaining continuous run period and places the unit in a Forced Defrost mode. If the DFT is closed when this mode is initiated, the unit will complete a normal defrost period that will terminate when the DFT opens or the 10 minute defrost cycle limit is reached. If the DFT is open when this mode is initiated, the Defrost cycle will run for 30 secs. Both modes end at the end of the Defrost cycle.

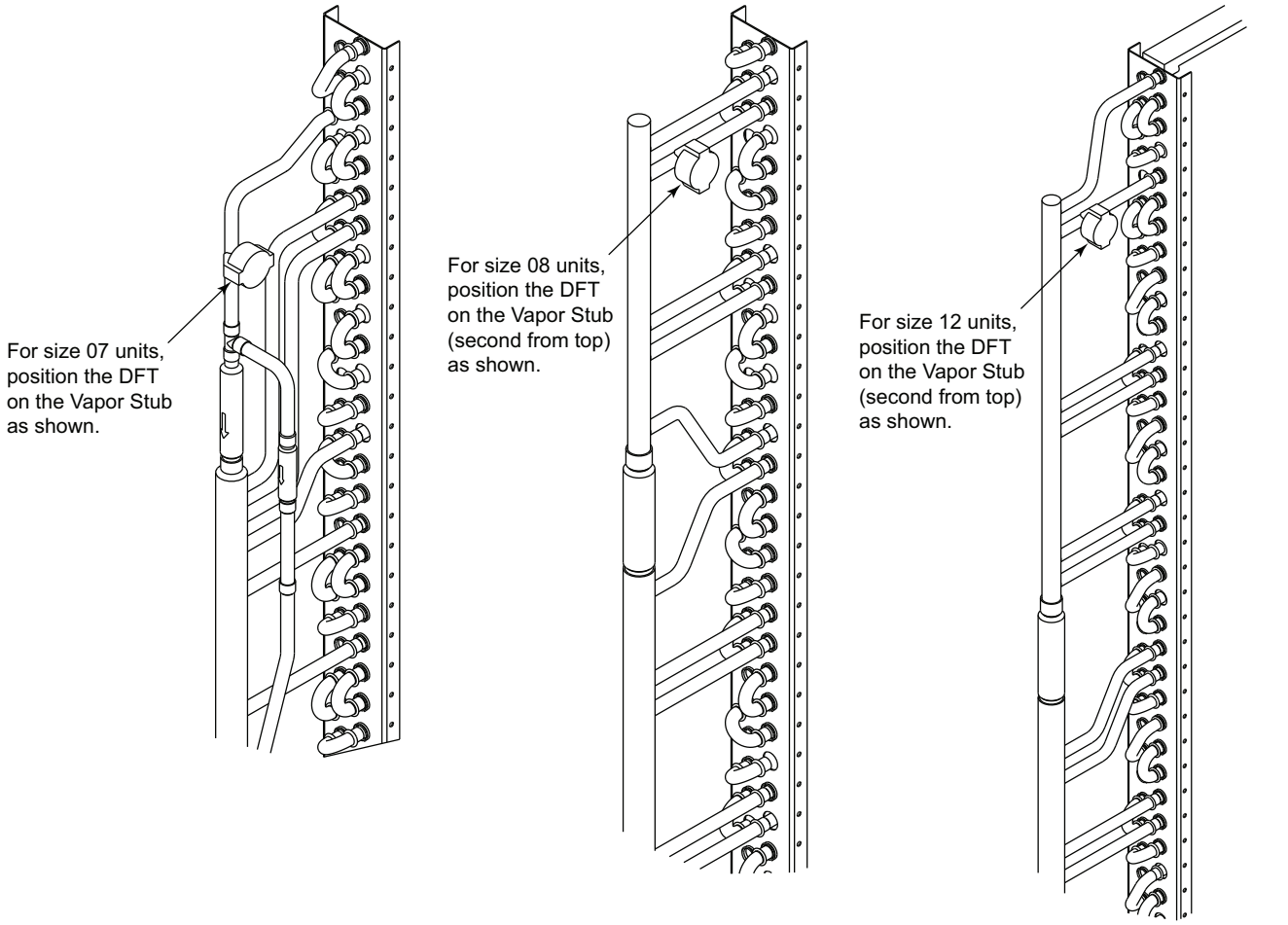

Fig. 24 - DFT Mounting Locations (Per Unit Size)

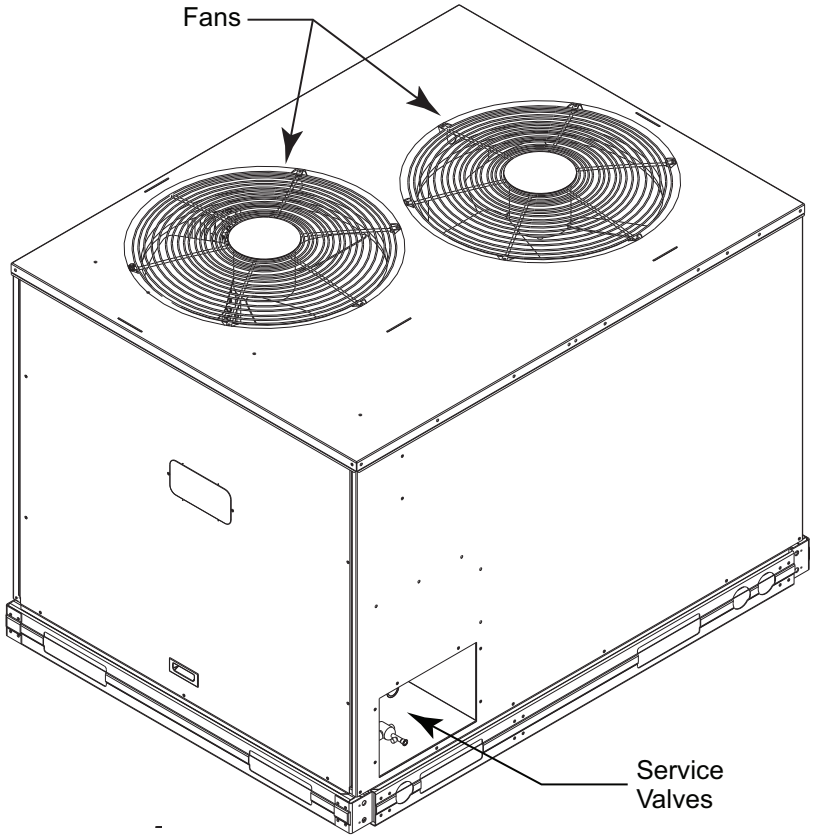

C11045

Fig. 25 - 38AUQ*07 Exterior

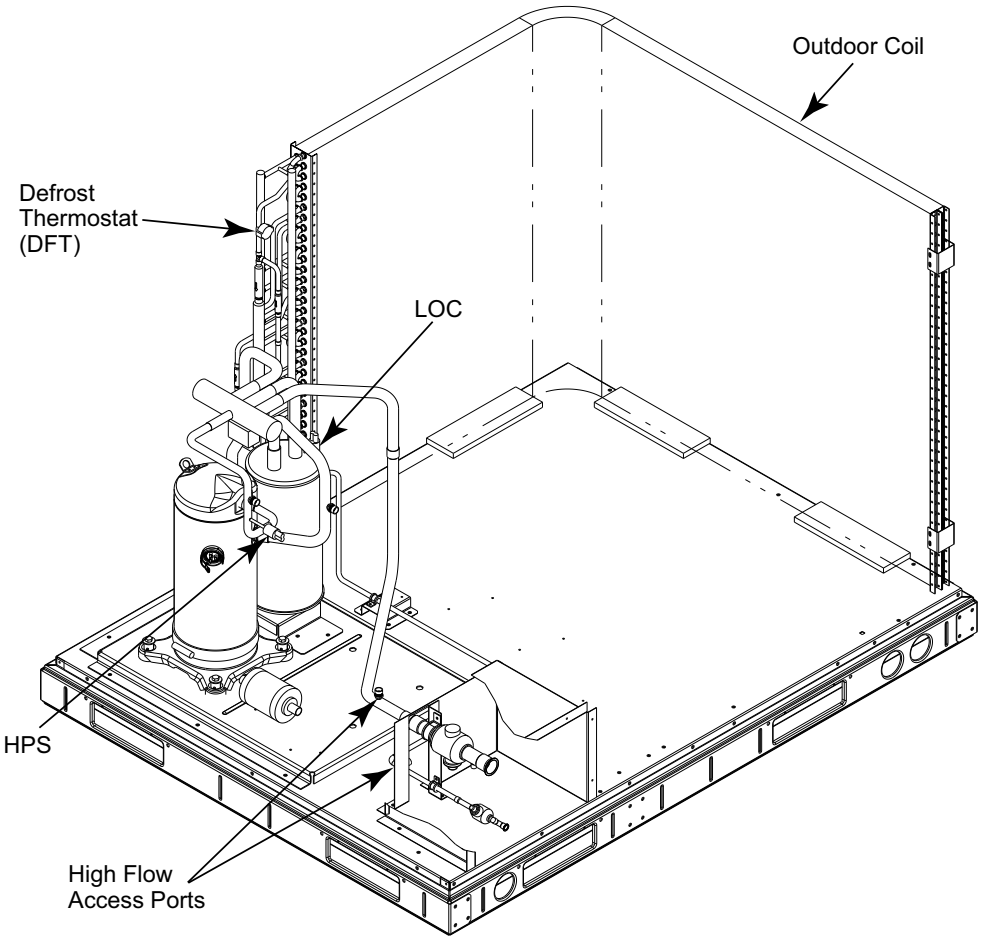

C150032

Fig. 26 - 38AUQ*07 Interior

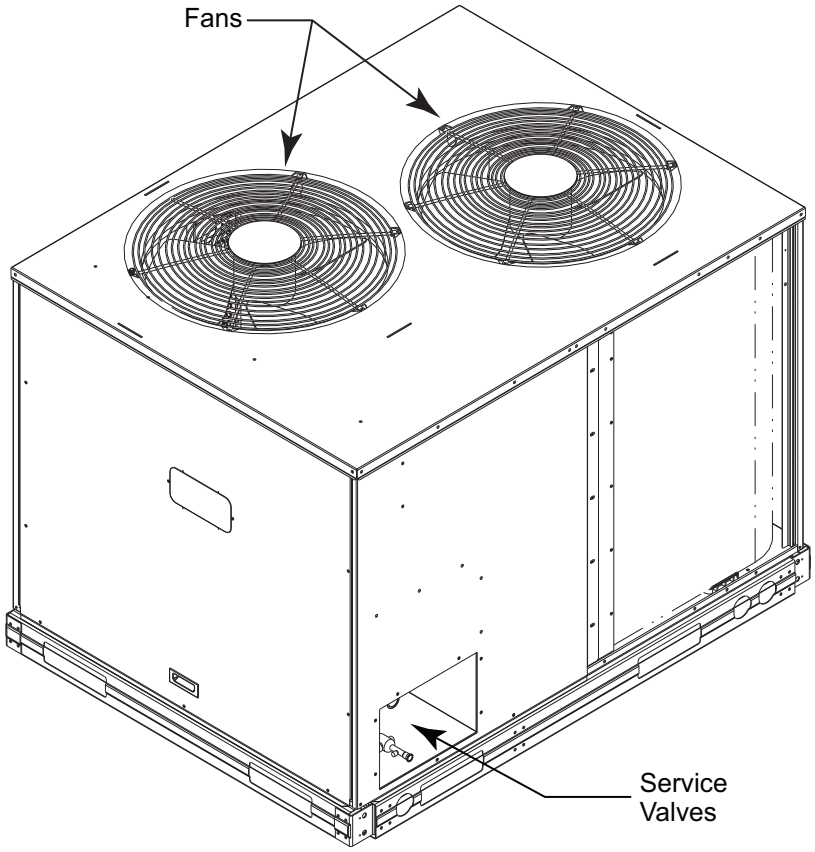

C11047

Fig. 27 - 38AUQ*08 Exterior

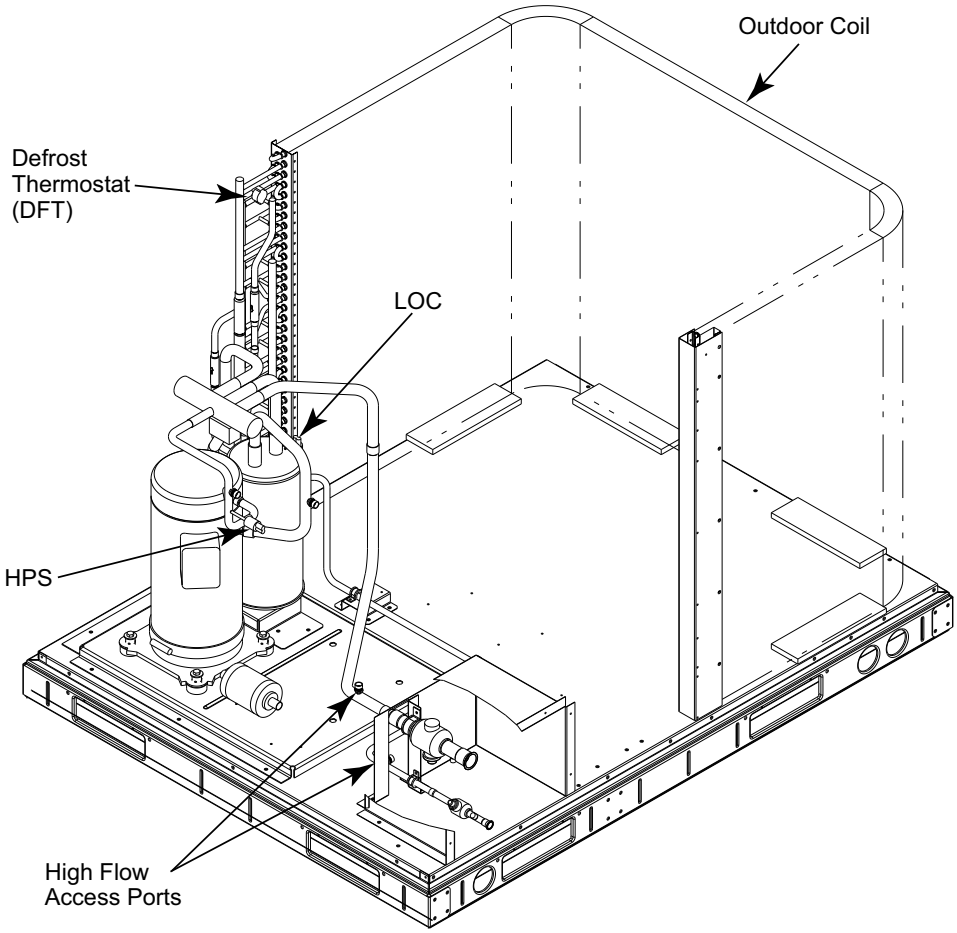

C150033

Fig. 28 - 38AUQ*08 Interior

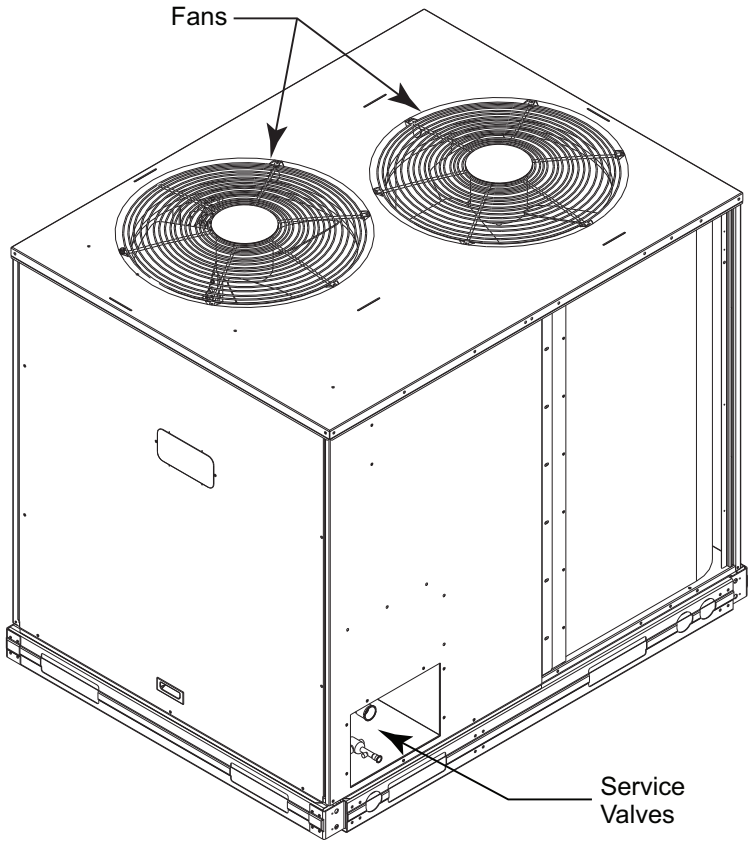

C11049

Fig. 29 - 38AUQ*12 Exterior

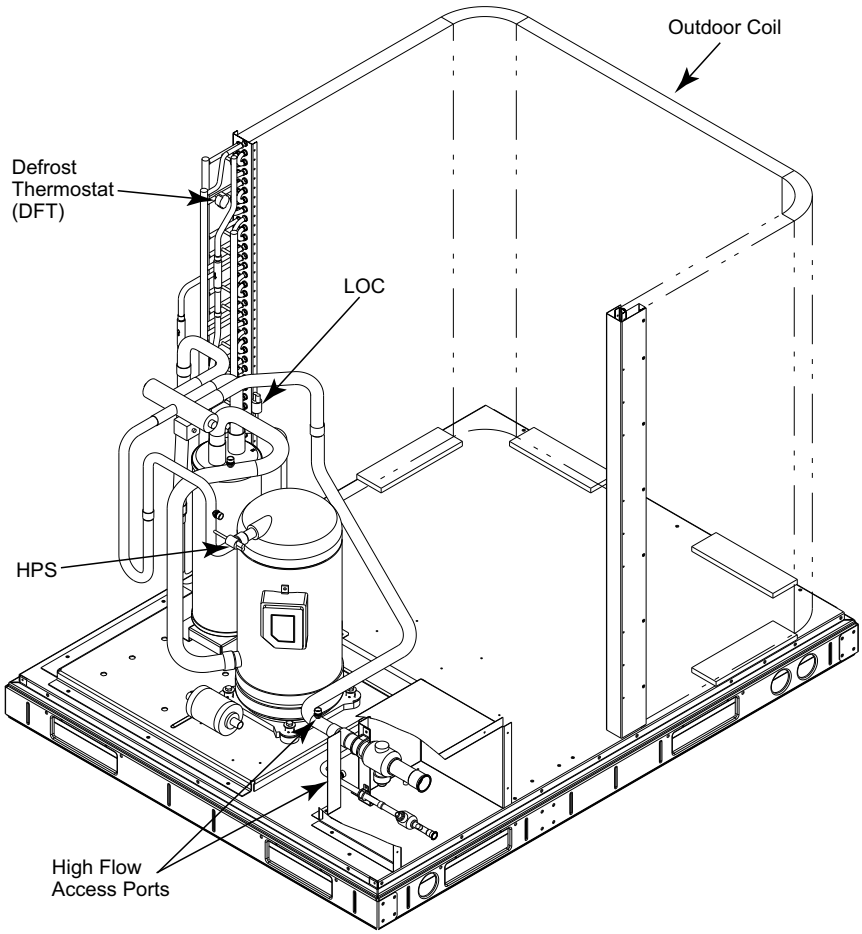

C150034

Fig. 30 - 38AUQ*12 Interior

COMFORT ALERT DIAGNOSTIC MODULE

The Comfort Alert Diagnostic Module (CADM) monitors and analyzes data from the Copeland Scroll® three-phase compressor and the thermostat demand. The CADM also provides a 3-minute anti-recycle time delay to compressor cycling.

The CADM detects causes for electrical and system related failures. Flashing LEDs communicate the Alert codes to guide service technicians in accurately and quickly troubleshooting the system and determining root cause for the failure.

Inputs to the CADM include 24-vac power, demand signal Y, compressor contactor coil (common side) and compressor power leads (from the compressor contactor).

Input	Terminal	Voltage
Control Power	R	24-V
Control Common	C	24-V
Demand	Y	24-V
Contactor Coil	P	24-V
Compressor T1	T1	Line
Compressor T2	T2	Line
Compressor T3	T3	Line

Control of the compressor contactor coil is through a contact between terminals P and C.

Communications of status and alert conditions is through three LEDs located on the top edge of the module housing (see Fig. 31): POWER (green), ALERT (yellow), and TRIP (red).

The POWER LED indicates the presence of control power to the CADM.

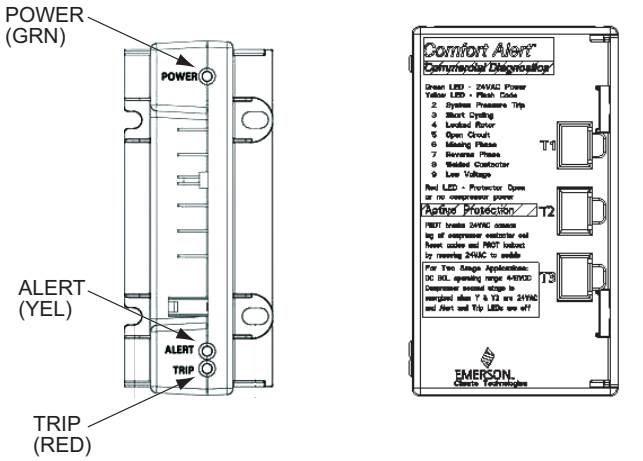

Fig. 31 - CADM Housing/LED Locations

The ALERT LED indicates an abnormal condition exists in the system through a flash code. The ALERT LED will blink a number of times consecutively, pause and the repeat the process. The number of blinks, defined in Table 10, correlates to a particular abnormal condition; troubleshooting tips are provided for each Alert code. Reset of the ALERT may be automatic or manual. If the fault condition causing the Alert is self-corrected, the Alert code will be removed and the CADM will automatically reset and allow the system to restart normally. Manual reset for lockouts requires that main power to the 38AUQ unit be recycled after the cause for the Alert condition has been detected and corrected.

The TRIP LED indicates either a time-delay period is currently active (RED LED is blinking) or the module has locked out the compressor (RED LED is on steady). A lockout condition will occur for some faults as identified in Table 11. Reset of the TRIP LED requires that unit main power be recycled after the loss of power to the compressor condition has been detected and corrected.

Simultaneous Blinking of YELLOW and RED LEDs indicates control power input to the CADM is low. Check control circuit transformer and wiring.

Troubleshooting the CADM Wiring – Flashing LEDs also indicate wiring problems to the CADM. See Table 12 for discussion of additional LED flash codes and troubleshooting instructions.

Table 11 – LED Status Codes

Status LED	Status LED Description	Status LED Troubleshooting Information
Green “POWER”	Module has power	Supply voltage is present at module terminals
Red “TRIP” LED On Solid	Thermostat demand signal Y is present, but the compressor is not running.	1. Compressor protector is open 2. Condensing unit power disconnect is open 3. Compressor circuit breaker or fuse(s) is open 4. Broken supply wires or connector is not making contact 5. Compressor power wires not routed through Comfort Alert 6. Compressor contactor has failed open
Red “TRIP” LED Flashing	The anti-short cycle timer (3 minutes), in module is preventing compressor restart.	
Module locks out compressor when compressor damaging ALERT code appears. Lockout ALERT codes are noted in the Status LED Description. During a compressor lock out, 24VAC power must be removed from module to manually reset.		
Yellow “ALERT” LED On Solid	A short circuit or over current condition exists on PROT terminal.	1. Compressor contactor coil shorted 2. Electrical load too high for PROT circuit (maximum 1 Amp) 3. 24 V AC wired directly to PROT terminal
Yellow “ALERT” Flash Code 2	System Pressure Trip Discharge pressure out of limits or compressor over-load (if no high pressure switch in system) LOCKOUT	1. High head pressure 2. Condenser coil poor air circulation (dirty, blocked, damaged) 3. Condenser fan is not running 4. If low pressure switch is open: Refer to Code 3 for troubleshooting
Yellow “ALERT” Flash Code 3	Short Cycling Compressor is running only briefly LOCKOUT	1. If low pressure switch is open: a. Low refrigerant charge b. Evaporator blower is not running c. Evaporator coil is frozen d. Faulty metering device e. Condenser coil is dirty f. Liquid line restriction (filter drier blocked if present) 2. If high pressure switch is open, go to Flash Code 2 information 3. Intermittent thermostat demand signal 4. System or control board defective
Yellow “ALERT” Flash Code 4	Locked Rotor LOCKOUT	1. Low line voltage to compressor 2. Excessive liquid refrigerant in compressor 3. Compressor bearings are seized
Yellow “ALERT” Flash Code 5	Open Circuit	1. Condensing unit power disconnect is open 2. Compressor circuit breaker or fuses are open 3. Compressor contactor has failed open 4. High pressure switch is open and requires manual reset 5. Broken supply wires or connector is not making contact 6. Unusually long compressor protector reset time due to extreme ambient temperature 7. Compressor windings are damaged
Yellow “ALERT” Flash Code 6	Missing Phase LOCKOUT	1. Compressor fuse is open on one phase 2. Broken wire or connector on one phase 3. Compressor motor winding is damaged 4. Utility supply has dropped one phase
Yellow “ALERT” Flash Code 7	Reverse Phase LOCKOUT	1. Compressor running backward due to supply phase reversal
Yellow “ALERT” Flash Code 8	Welded Contactor Compressor always runs	1. Compressor contactor has failed closed 2. Thermostat demand signal not connected to module
Yellow “ALERT” Flash Code 9	Low Voltage Control circuit < 18VAC	1. Control circuit transformer is overloaded 2. Low line voltage to compressor

Table 12 – CADM Troubleshooting

Miswired Module Indication	Recommended Troubleshooting Action
Green LED is not on, module does not power up	Determine if both R and C module terminals are connected. Verify voltage in present at module's R and C terminals. **NOTE:** The CADM requires a constant nominal 24VAC power supply. The wiring to the module's R and C terminals must be directly from the control transformer. The module cannot receive its power from another device that will interrupt the 24VAC power supply. See Fig. 19, the 38AUQ Wiring Diagram.
Green LED Intermittent, module powers up only when compressor runs	Determine if R and Y terminals are wired in reverse. Verify module's R and C terminals have a constant source. See "**NOTE**" above for details on R and C wiring.
TRIP LED is on but system and compressor check OK	Verify Y terminal is wired properly per the 38AUQ wiring diagram (see Fig. 19). Verify voltage at contactor coil falls below 0.5VAC when off. Verify 24VAQC is present across Y and C when thermostat demand signal is present. If not, R and C are reverse wired.
TRIP LED and ALERT LED flashing together	Verify R and C terminals are supplied with 19-28VAC.
ALERT Flash Code 3 (Compressor Short Cycling) displayed incorrectly	Verify Y terminal is connected to 24VAC at contactor coil. Verify voltage at contactor coil falls below 0.5VAC when off.
ALERT Flash Code 5 or 6 (Open Circuit, Missing Phase) displayed incorrectly	Check that compressor T1 and T3 wires are through module's current sensing holes. Verify Y terminal is connected to 24VAC at contactor coil. Verify voltage at contactor coil falls below 0.5VAC when off.
Alert Flash Code * (Welded Contactor) displayed incorrectly	Determine if module's Y terminal is connected. Verify Y terminal is connected to 24VAC at contactor coil. Verify 24VAC is present across Y and C when thermostat demand signal is present. If not, R and C are reverse wired. Verify voltage at contactor coil falls below 0.5VAC when off.

Outdoor Fans

Each fan is supported by a formed-wire mount bolted to the fan deck and covered with a wire guard. Fan motors have permanently lubricated bearings.

1. Shut off unit power supply. Install lockout tag.
2. Remove outdoor fan assembly (grille, motor, and fan).
3. Loosen fan hub setscrews.
4. Adjust fan height as shown in Fig. 32.
5. Tighten setscrews to 84 in-lbs (949 N-cm).
6. Replace outdoor fan assembly.

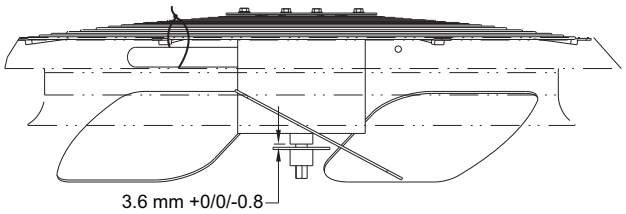

C10103

Fig. 32 - Outdoor Fan Blade Position

Lubrication

Fan Motors —

The fan motors have sealed bearings. No provisions are made for lubrication.

Compressor —

The compressor has its own oil supply. Loss of oil due to a leak in the system should be the only reason for adding oil after the system has been in operation.

Outdoor Coil Maintenance and Cleaning Recommendation

Routine cleaning of coil surfaces is essential to maintain proper operation of the unit. Elimination of contamination and removal of harmful residues will greatly increase the life of the coil and extend the life of the unit. The following maintenance and cleaning procedures are recommended as part of the routine maintenance activities to extend the life of the coil.

Remove Surface Loaded Fibers —

Surface loaded fibers or dirt should be removed with a vacuum cleaner. If a vacuum cleaner is not available, a soft non-metallic bristle brush may be used. In either case, the tool should be applied in the direction of the fins. Coil surfaces can be easily damaged (fin edges can be easily bent over and damage the coating of a protected coil) if the tool is applied across the fins.

NOTE: Use of a water stream, such as a garden hose, against a surface loaded coil will drive the fibers and dirt into the coil. This will make cleaning efforts more difficult. Surface loaded fibers must be completely removed prior to using low velocity clean water rinse.

Periodic Clean Water Rinse —

A periodic clean water rinse is very beneficial for coils that are applied in coastal or industrial environments. However, it is very important that the water rinse is made with very low velocity water stream to avoid damaging the fin edges. Monthly cleaning as described below is recommended.

⚠ CAUTION

PERSONAL INJURY AND UNIT DAMAGE HAZARD

Failure to follow this caution may result in personal injury or equipment damage.

Only approved cleaning is recommended.

Routine Cleaning of Indoor Coil Surfaces —

Periodic cleaning with Totaline® environmentally sound coil cleaner is essential to extend the life of coils. This cleaner is available from Carrier Replacement Components Division as part number P902-0301 for one gallon container, and part number P902-0305 for a 5 gallon container. It is recommended that all coils, including standard aluminum, pre-coated, copper/copper or E-coated coils be cleaned with the Totaline environmentally sound coil cleaner as described below. Coil cleaning should be part of the unit's regularly scheduled maintenance procedures to ensure long life of the coil. Failure to clean the coils may result in reduced durability in the environment.

Avoid the use of:

- coil brighteners
- acid cleaning prior to painting
- high pressure washers
- poor quality water for cleaning

Totaline environmentally sound coil cleaner is nonflammable, hypoallergenic, non bacterial, and a USDA accepted biodegradable agent that will not harm the coil or surrounding components such as electrical wiring, painted metal surfaces, or insulation. Use of non-recommended coil cleaners is strongly discouraged since coil and unit durability could be affected.

Totaline Environmentally Sound Coil Cleaner Application Equipment:

- $2^1/_2$ gallon garden sprayer
- Water rinse with low velocity spray nozzle

⚠ CAUTION

UNIT DAMAGE HAZARD

Failure to follow this caution may result in corrosion and damage to the unit .

Harsh chemicals, household bleach or acid or basic cleaners should not be used to clean outdoor or indoor coils of any kind. These cleaners can be very difficult to rinse out of the coil and can accelerate corrosion at the fin/tube interface where dissimilar materials are in contact. If there is dirt below the surface ot the coil, use the Totaline environmentally sound coil cleaner as described above.

⚠ CAUTION

UNIT RELIABILTY HAZARD

Failure to follow this caution may result in reduced unit performance .

High velocity water from a pressure washer, garden hose, or compressed air should never be used to clean a coil. The force of the water or air jet will bend the fin edges and increase airside pressure drop.

Totaline Environmentally Sound Coil Cleaner Application Instructions:

NOTE: Proper eye protection such as safety glasses is recommended during mixing and application.

1. Turn off unit power.
2. Remove screws holding rear corner post and top cover in place. Pivot top cover up 12 to 18 inches (305 to 457 mm) and support with a rigid support. See Fig. 33.

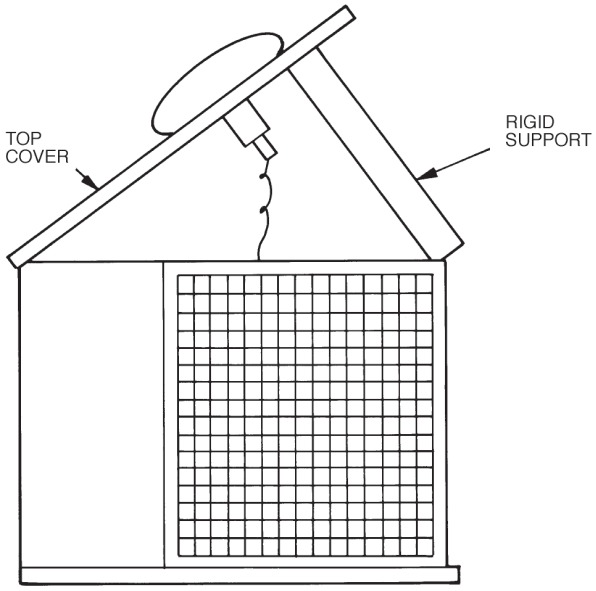

C10216

Fig. 33 - Pivot and Support Top Cover

3. Remove all surface loaded fibers and dirt with a vacuum cleaner. If a vacuum cleaner is not available, a soft non-metallic bristle brush may be used. In either case, the tool should be applied in the direction of the fins. Coil surfaces can be easily damaged (fin edges can be easily bent over and damage to the coating of a protected coil) if the tool is applied across the fins.

NOTE: Use of a water stream, such as a garden hose, against surface loaded coil will drive the fibers and dirt into the coil, making cleaning efforts more difficult. Surface loaded fibers must be completely removed prior to using low velocity clean water rinse.

4. Using a low velocity garden hose thoroughly wet finned surfaces with clean water. Be careful not to bend the fins.

5. Mix Totaline environmentally sound coil cleaner in a $2^1/_2$ gallon garden sprayer according to the instructions included with the cleaner. The optimum solution temperature is 100°F (38°C).

NOTE: Do NOT USE water in excess of 130°F (54°C), as the enzymatic activity will be destroyed.

6. Thoroughly apply Totaline® environmentally sound coil cleaner solution to all coil surfaces including the finned area, tube sheets and coil headers.
7. Hold garden sprayer nozzle close to finned areas and apply cleaner with a vertical, up-and-down motion. Avoid spraying in horizontal pattern to minimize potential for fin damage.
8. Ensure cleaner thoroughly penetrates deep into finned areas.
9. Interior and exterior finned areas must be thoroughly cleaned.
10. Finned surfaces should remain wet with cleaning solution for 10 minutes.
11. Ensure surfaces are not allowed to dry before rinsing. Reapply cleaner as needed to ensure 10-minute saturation is achieved.
12. Thoroughly rinse all surfaces with low velocity clean water using downward rinsing motion of water spray nozzle. Protect fins from damage from the spray nozzle.
13. Replace top cover and rear corner posts.

Service Parts

Listings of service parts for all units are available from the Replacement Components Division's Electronic Parts Information Catalog (EPIC). EPIC is available at Totaline stores, distributor and service office parts departments and on-line at HVACPartners.com.

When entering EPIC, the full unit model number is required. The model number includes the Design Revision reference value (see Fig. 2, Position 13). The unit model number is available from the unit's information data plate. (Do not use the "catalog number" when using EPIC. The "catalog number" suppresses the Design Revision value; failure to include Design Revision value may cause an incorrect unit parts list to be displayed.) When using EPIC, enter first four digits of the model number only. Find appropriate model from sales packages listed. Be sure to choose correct voltage and Design Revision.

EPIC is a product of RCD. To comment to the EPIC program, use the "Comment" button inside the EPIC program.

FASTENER TORQUE VALUES

Table 13 – Torque Values

Compressor mounting bolts	65–75 in–lbs (734–847 N–cm)
Condenser fan motor mounting bolts	20 ±2 in–lbs (226 ±23 N–cm)
Condenser fan hub setscrew	84 ±2 in–lbs (949 ±136 N–cm)
High-flow service port	96 ±10 in–lbs (1085 ±23 N–cm)
Schrader-type service check valve	2–3 in–lbs (23–34 N–cm)
Compressor oil sightglass thread	330 ±31 in–lbs (23–34 N–cm)
Compressor to Compressor rail torque	120–168 in–lbs (1356–1898 N–cm)
Compressor rail to base pan torque	70 ±5 in–lbs (791 ±57 N–cm)

TROUBLESHOOTING

PROBLEM	CAUSE	REMEDY
Compressor and Outdoor Fan Will Not Start.	Power failure.	Call power company.
	Fuse blown or circuit breaker tripped.	Replace fuse or reset circuit breaker. Determine root cause.
	Defective thermostat, contactor, transformer, control relay, or capacitor.	Replace component.
	Insufficient line voltage.	Determine cause and correct.
	Incorrect or faulty wiring.	Check wiring diagram and rewire correctly.
	Thermostat setting too high.	Lower thermostat setting below room temperature.
	High pressure switch tripped.	See problem ‘‘Excessive head pressure.’’
	Low pressure switch tripped.	Check system for leaks. Repair as necessary.
	Freeze-up protection thermostat tripped.	See problem ‘‘Suction pressure too low.’’
Compressor Will Not Start But Outdoor Fan Runs.	Faulty wiring or loose connections in compressor circuit.	Check wiring and repair or replace.
	Compressor motor burned out, seized, or internal overload open.	Determine cause. Replace compressor or allow enough time for internal overload to cool and reset.
	Defective run/start capacitor, overload, start relay.	Determine cause and replace compressor.
	One leg of 3-phase power dead.	Replace fuse or reset circuit breaker. Determine cause.
Compressor Cycles (Other Than Normally Satisfying Thermostat).	Refrigerant overcharge or undercharge.	Recover refrigerant, evacuate system, and recharge to nameplate.
	Defective compressor.	Replace and determine cause.
	Insufficient line voltage.	Determine cause and correct.
	Blocked outdoor coil or dirty air filter.	Determine cause and correct.
	Defective run/start capacitor, overload, or start relay.	Determine cause and replace.
	Defective thermostat.	Replace thermostat.
	Faulty outdoor-fan (cooling) or indoor-fan (heating) motor or capacitor.	Replace.
	Restriction in refrigerant system.	Locate restriction and remove.
Compressor Operates Continuously.	Dirty air filter.	Replace filter.
	Unit undersized for load.	Decrease load or increase unit size.
	Thermostat set too low (cooling).	Reset thermostat.
	Low refrigerant charge.	Locate leak; repair and recharge.
	Air in system.	Recover refrigerant, evacuate system, and recharge.
	Outdoor coil dirty or restricted.	Clean coil or remove restriction.
Compressor Makes Excessive Noise.	Compressor rotating in the wrong direction.	Reverse the 3-phase power leads as described in Start-Up.
Excessive Head Pressure.	Dirty outside air or return air filter (heating).	Replace filter.
	Dirty outdoor coil (cooling).	Clean coil.
	Refrigerant overcharged.	Recover excess refrigerant.
	Air in system.	Recover refrigerant, evacuate system, and recharge.
	Condensing air restricted or air short-cycling.	Determine cause and correct.
Head Pressure Too Low.	Low refrigerant charge.	Check for leaks; repair and recharge.
	Compressor scroll plates defective.	Replace compressor.
	Restriction in liquid tube.	Remove restriction.
Excessive Suction Pressure.	High heat load.	Check for source and eliminate.
	Compressor scroll plates defective.	Replace compressor.
	Refrigerant overcharged.	Recover excess refrigerant.
Suction Pressure Too Low.	Dirty air filter (cooling).	Replace filter.
	Dirty or heavily iced outdoor coil (heating).	Clean outdoor coil. Check defrost cycle operation.
	Low refrigerant charge.	Check for leaks; repair and recharge.
	Metering device or low side restricted.	Remove source of restriction.
	Insufficient indoor airflow (cooling mode).	Increase air quantity. Check filter and replace if necessary.
	Temperature too low in conditioned area.	Reset thermostat.
	Field-installed filter drier restricted.	Replace.
	Outdoor ambient below 25°F (cooling).	Install low–ambient kit.
	Outdoor fan motor(s) not operating (heating).	Check fan motor operation.

APPENDIX A

AIR CONDITIONER AND HEAT PUMP WITH PURON® — QUICK REFERENCE GUIDE

- Puron® (R-410A) refrigerant operates at 50 percent to 70 percent higher pressures than R-22. Be sure that servicing equipment and replacement components are designed to operate with Puron®.
- Puron® refrigerant cylinders are rose colored.
- Recovery cylinder service pressure rating must be 400 psig, DOT 4BA400 or DOT BW400.
- Puron® systems should be charged with liquid refrigerant. Use a commercial type metering device in the manifold hose when charging into suction line with compressor operating.
- Manifold sets should be 700 psig high side and 180 psig low side with 550 psig low-side retard.
- Use hoses with 700 psig service pressure rating.
- Leak detectors should be designed to detect HFC refrigerant.
- Puron®, as with other HFCs, is only compatible with POE oils.
- Vacuum pumps will not remove moisture from oil.
- Use only factory specified liquid-line filter driers with rated working pressures greater than 600 psig.
- Do not install a suction-line filter drier in liquid-line.
- POE oils absorb moisture rapidly. Do not expose oil to atmosphere.
- POE oils may cause damage to certain plastics and roofing materials.
- Wrap all filter driers and service valves with wet cloth when brazing.
- A factory approved, liquid-line filter drier is required on every unit.
- Do not use an R-22 TXV.
- If indoor unit is equipped with a TXV, it must be changed to a Puron® TXV.
- Never open system to atmosphere while it is under a vacuum.
- When system must be opened for service, recover refrigerant, break vacuum with dry nitrogen before opening system.
- Always replace filter drier after opening system for service.
- Do not vent Puron® into the atmosphere.
- Do not use capillary tube coils.
- Observe all **warnings**, **cautions**, and **bold** text.
- All Puron® heat pumps must have indoor TXV.
- Do not leave Puron® suction line driers in place for more than 72 hours.

APPENDIX B

WIRING DIAGRAM LIST

38AUQ

Size	Electrical Characteristics	Diagram Number
*07	208/230-3-60	38AU500363
	460-3-60	38AU500362
	575-3-60	38AU500435
*08	208/230-3-60	38AU500363
	460-3-60	38AU500362
	575-3-60	38AU500435
*12	208/230-3-60	38AU500363
	460-3-60	38AU500362
	575-3-60	38AU500435

APPENDIX C

Low Ambient Option — Factory Installed

Units with the factory installed low ambient option are equipped with a Motormaster® solid-state head pressure control which regulates fan speed. A temperature sensor, mounted on circuit 1 of the outdoor coil (see Fig. 34) controls the speed of approved outdoor fan motors in order to maintain a constant head pressure in the outdoor coil. The control maintains the appropriate head pressure at low ambient temperatures down to -20°F (-28°C).

Wind baffles are required to prevent wind cross currents from causing abnormally low condensing temperatures.

Use 20-gauge sheet metal to fabricate wind baffles (see Fig. 35 and Table 14).

Operation —

Fan on/off control in heat pump units (38AUQ) is provided by an outdoor fan relay (OFR). In heat pumps, the OFR is controlled by defrost control board (DFB).

Fan motor speed in cooling mode is regulated by the temperature sensor for a minimum coil condensing temperature of approximately 100° at higher outdoor ambient temperature and 80°F at lower ambient.

For heat pump units, the speed control bypass relay (SCB) is used to bypass the speed control during the heating mode, resulting in full fan speed at all times.

To override the speed control for full fan speed operation during service or maintenance, either:

a) remove sensor and place in hot water >120°F (>49°C)

or

b) rewire to bypass control by connecting speed control input and output power wires.

Troubleshooting —

OBSERVATION	POSSIBLE REMEDY
Fans won't start	Check power & wiring Check sensor location Check sensor resistance Check OFR
Cooling – Slow fan speed at start or during low outdoor ambient	Normal operation
Cooling – Slow fan speed above 85°F outdoor ambient (should be full speed)	Check sensor location Check sensor resistance Check fan motor capacitor
Cooling – motor current into speed control is greater than motor nameplate FLA	Normal operation Up to 30% higher amps at partial speed at low ambient
Heating – Full fan speed	Normal operation
Heating – Slow fan speed (should be full speed)	Check wiring Check SCB relay for speed control bypass

Speed Control Sensor Resistance —

TEMPERATURE		RESISTANCE
°F +/–2°F°	°C +/–1C	Ohms, nominal
–22	–30	88350
–4	–20	48485
14	–10	27650
32	0	16325
50	10	9950
68	20	6245
77	25	5000
86	30	4028
104	40	2663
122	50	1801
140	60	1244
158	70	876

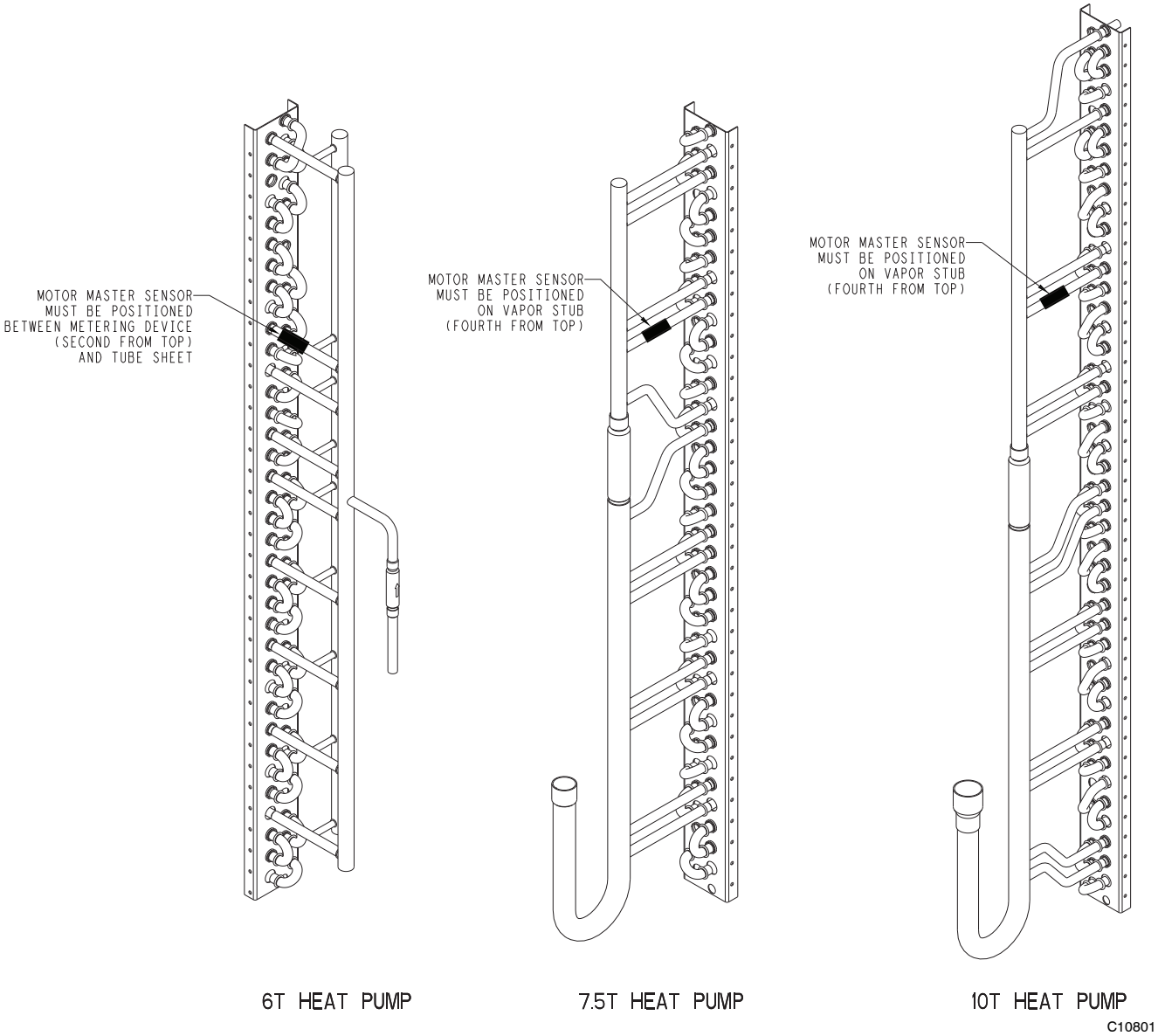

Fig. 34 - Sensor Locations

Table 14 – Wind Baffle Dimensions

DIMENSIONS – INCHES											
UNIT	BAFFLE	A	B	C	D	E	F	G	H	J	K
38AUQ 07	LEFT SIDE	28 1/2	29	29 3/4	35 1/4	1 1/4	9 1/4	17 1/4	25 1/4	33 1/4	–
	BACK	40	40 3/4	41 1/2	35 1/4	4 1/4	11 1/4	18 1/4	25 1/4	32 1/4	–
38AUQ 08	LEFT SIDE	28 1/2	29	29 3/4	35 1/4	1 1/4	9 1/4	17 1/4	25 1/4	33 1/4	–
	BACK	40	40 3/4	41 1/2	35 1/4	4 1/4	11 1/4	18 1/4	25 1/4	32 1/4	–
	RIGHT SIDE	25	25 1/2	26 1/4	35 1/4	4 1/4	11 1/4	18 1/4	25 1/4	32 1/4	–
38AUQ 12	LEFT SIDE	28 1/2	29	29 3/4	43 1/8	1 1/4	9 1/4	17 1/4	25 1/4	33 1/4	41 1/4
	BACK	40	40 3/4	41 1/2	43 1/8	4 1/4	11 1/4	18 1/4	25 1/4	32 1/4	39 1/4
	RIGHT SIDE	25	25 1/2	26 1/4	43 1/8	4 1/4	11 1/4	18 1/4	25 1/4	32 1/4	39 1/4

DIMENSIONS – MM											
UNIT	BAFFLE	A	B	C	D	E	F	G	H	J	K
38AUQ 07	LEFT SIDE	718	737	756	895	33	236	439	643	846	–
	BACK	1016	1035	1054	895	107	284	462	640	818	–
38AUQ 08	LEFT SIDE	718	737	756	895	33	236	439	643	846	–
	BACK	1016	1035	1054	895	107	284	462	640	818	–
	RIGHT SIDE	629	648	667	895	107	284	462	640	818	–
38AUQ 12	LEFT SIDE	718	737	756	1095	33	236	439	643	846	1049
	BACK	1016	1035	1054	1095	107	284	462	640	818	996
	RIGHT SIDE	629	648	667	1095	107	284	462	640	818	996

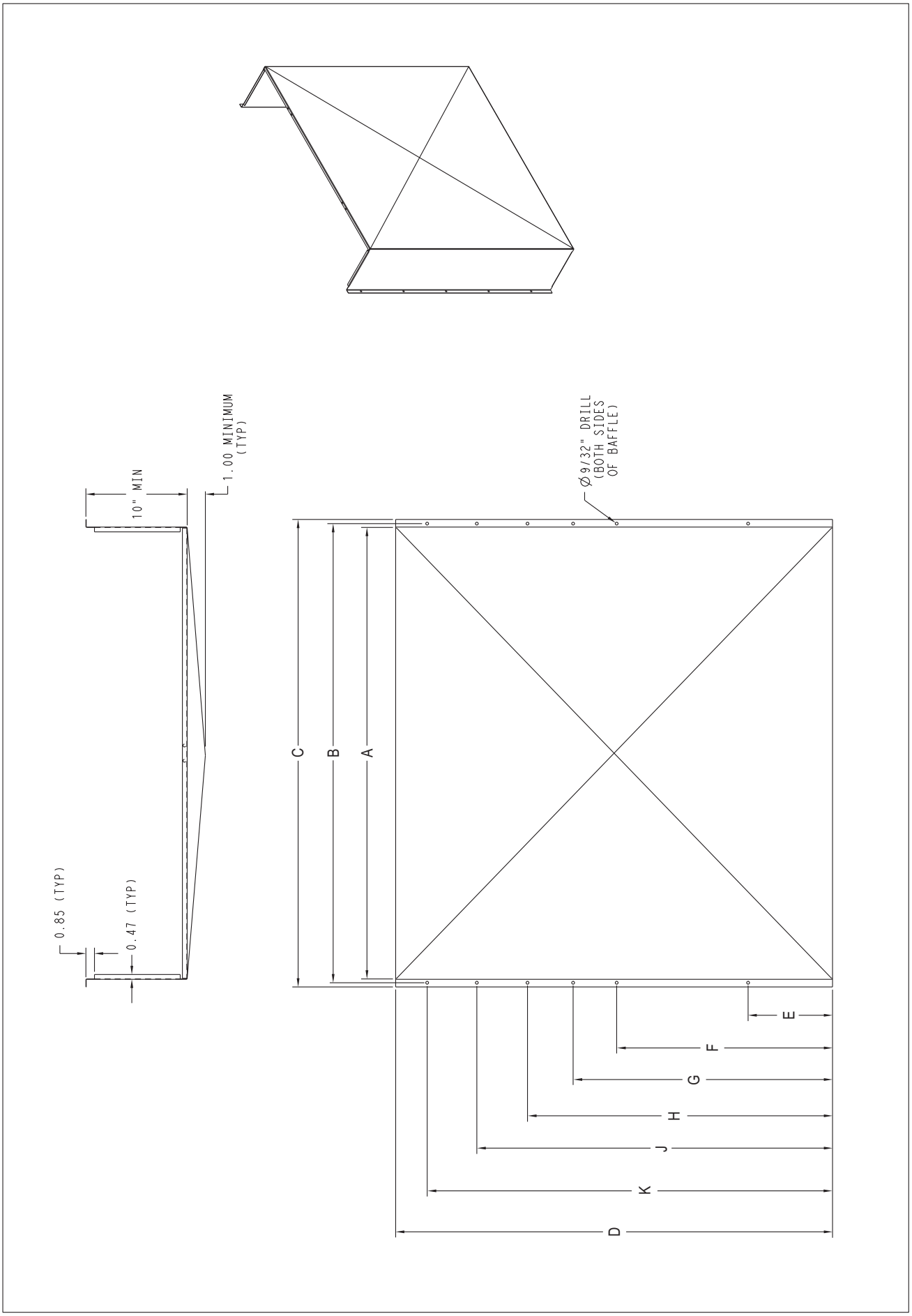

C10800

Fig. 35 - Wind Baffles

Copyright 2015 Carrier Corp. • 7310 W. Morris St. • Indianapolis, IN 46231

Edition Date: 01/15

Catalog No: 38AUQ−7−12−01SI

Manufacturer reserves the right to change, at any time, specifications and designs without notice and without obligations.

Replaces: 38AUQ−02SI

START UP CHECKLIST

I. PRELIMINARY INFORMATION

OUTDOOR: MODEL NO. _____ SERIAL NO. _____

INDOOR: MODEL NO. _____ SERIAL NO. _____

ADDITIONAL ACCESSORIES _____

II. PRE-START-UP

OUTDOOR UNIT

IS THERE ANY SHIPPING DAMAGE? (Y/N) _____

IF SO, WHERE: _____

_____

WILL THIS DAMAGE PREVENT UNIT START-UP? (Y/N) _____

CHECK POWER SUPPLY. DOES IT AGREE WITH UNIT? (Y/N) _____

HAS THE GROUND WIRE BEEN CONNECTED? (Y/N) _____

HAS THE CIRCUIT PROTECTION BEEN SIZED AND INSTALLED PROPERLY? (Y/N) _____

ARE THE POWER WIRES TO THE UNIT SIZED AND INSTALLED PROPERLY? (Y/N) _____

CONTROLS

ARE THERMOSTAT AND INDOOR FAN CONTROL WIRING CONNECTIONS MADE AND CHECKED? (Y/N) _____

ARE ALL WIRING TERMINALS (including main power supply) TIGHT? (Y/N) _____

HAS CRANKCASE HEATER BEEN ENERGIZED FOR 24 HOURS? (Y/N) _____

INDOOR UNIT

HAS WATER BEEN PLACED IN DRAIN PAN TO CONFIRM PROPER DRAINAGE? (Y/N) _____

ARE PROPER AIR FILTERS IN PLACE? (Y/N) _____

HAVE FAN AND MOTOR PULLEYS BEEN CHECKED FOR PROPER ALIGNMENT? (Y/N) _____

DO THE FAN BELTS HAVE PROPER TENSION? (Y/N) _____

HAS CORRECT FAN ROTATION BEEN CONFIRMED? (Y/N) _____

PIPING

IS LIQUID LINE SOLENOID VALVE LOCATED AT THE OUTDOOR COILS AS REQUIRED? (Y/N) _____

HAVE LEAK CHECKS BEEN MADE AT COMPRESSOR, OUTDOOR AND INDOOR COILS, TXVs (Thermostatic Expansion Valves), SOLENOID VALVES, FILTER DRIERS, AND FUSIBLE PLUGS WITH A LEAK DETECTOR? (Y/N) _____

LOCATE, REPAIR, AND REPORT ANY LEAKS. _____

HAS LIQUID LINE SERVICE VALVE BEEN OPENED? (Y/N) _____

HAS VAPOR LINE SERVICE VALVE BEEN OPENED? (Y/N) _____

CHECK VOLTAGE IMBALANCE

LINE-TO-LINE VOLTS: AB _____ V AC _____ V BC _____ V

(AB + AC + BC)/3 = AVERAGE VOLTAGE = _____ V

MAXIMUM DEVIATION FROM AVERAGE VOLTAGE = _____ V

VOLTAGE IMBALANCE = 100 X (MAX DEVIATION)/(AVERAGE VOLTAGE) = _____

IF OVER 2% VOLTAGE IMBALANCE, DO NOT ATTEMPT TO START SYSTEM!
CALL LOCAL POWER COMPANY FOR ASSISTANCE.

CHECK INDOOR UNIT FAN SPEED AND RECORD. _____

CHECK OUTDOOR UNIT FAN SPEED AND RECORD. _____

AFTER AT LEAST 10 MINUTES RUNNING TIME, RECORD THE FOLLOWING MEASUREMENTS:

	COOLING	HEATING	
VAPOR PRESSURE	_____	_____	
SUCTION LINE TEMP	_____	_____	(AT COMPRESSOR)
LIQUID PRESSURE	_____	_____	
LIQUID LINE TEMP	_____	_____	
ENTERING OUTDOOR UNIT AIR TEMP	_____	_____	
LEAVING OUTDOOR UNIT AIR TEMP	_____	_____	
INDOOR UNIT ENTERING-AIR DB (dry bulb) TEMP	_____	_____	
INDOOR UNIT ENTERING-AIR WB (wet bulb) TEMP	_____	_____	
INDOOR UNIT LEAVING-AIR DB TEMP	_____	_____	
INDOOR UNIT LEAVING-AIR wB TEMP	_____	_____	

COMPRESSOR AMPS (L1/L2/L3) _____ / _____ / _____

NOTES:

_____
_____
_____
_____
_____
_____
_____
_____
_____
_____
_____
_____
_____

Copyright 2015 Carrier Corp. • 7310 W. Morris St. • Indianapolis, IN 46231
Edition Date: 01/15

Catalog No: 38AUQ–7–12–01SI

Manufacturer reserves the right to change, at any time, specifications and designs without notice and without obligations.

Replaces: 38AUQ–02SI