48TC
Single Package Rooftop
Gas Heating/Electric Cooling Unit
with Puron® (R−410A) Refrigerant:
Sizes 08, 12, and 14 with NOVATION™ Coil
Sizes 08 − 14 with Round Tube/Plate Fin Coil

Carrier
turn to the experts

Installation Instructions

NOTE: Read the entire instruction manual before starting the installation

TABLE OF CONTENTS

SAFETY CONSIDERATIONS 2
Rated Indoor Airflow (cfm) 3
INSTALLATION 8
Jobsite Survey 8
Step 1 - Plan for Unit Location 8
Roof Mount 9
Step 2 - Plan for Sequence of Unit Installation 9
Curb-Mount Installation 9
Pad-Mount Installation 9
Frame-Mount Installation 9
Step 3 - Inspect Unit 9
Step 4 - Provide Unit Support 9
Roof Curb Mount 11
Slab Mount (Horizontal Units Only) 11
Alternate Unit Support (In Lieu of Curb or Slab Mount) 11
Step 5 - Field Fabricate Ductwork 11
Step 6 - Rig and Place Unit 11
Positioning on Curb 12
Step 7 - Convert to Horizontal & Connect Ductwork . 12
Step 8 - Install Outside Air Hood 13
Economizer and Two Position Damper Hood Package Removal and Setup — Factory Option . . 13
Economizer Hood and Two-Position Hood 13
Step 9 - Install Flue Hood 14
Step 10 - Install Gas Piping 14
Factory-Option Thru-Base Connections (Gas Connections) 15
Step 11 - Install External Condensate Trap and Line . . 17
Step 12 - Make Electrical Connections 17
Field Power Supply 18
Units with Factory-Installed Non-Fused Disconnect 18
Units without Factory-Installed Non-Fused Disconnect 19
All Units 19
Convenience Outlets 19
Factory-Option Thru-Base Connections (Electrical Connections) — 20
Units without Thru-Base Connections 21
Field Control Wiring 21
Thermostat 21
Unit without Thru-Base Connection Kit 21
Heat Anticipator Settings 21
Humidi-MiZer® Control Connections 22
Humidi-MiZer - Space RH Controller 22
EconoMi$er X (Factory-Installed Option) 22
PremierLink™ (Factory Option) 24
Supply Air Temperature (SAT) Sensor 27
Outdoor Air Temperature (OAT) Sensor 27
EconoMi$er2 27
Field Connections 27
Space Sensors 29
Connect Thermostat 29
Configure the Unit for Thermostat Mode 29
Economizer Controls 30
Indoor Air Quality (CO_2) Sensor 30
Outdoor Air Quality Sensor 30
Space Relative Humidity Sensor or Humidistat Connections 31
Smoke Detector/Fire Shutdown (FSD) 31
Filter Status Switch 32
Supply Fan Status Switch 32
Remote Occupied Switch 32
Power Exhaust (output) 32
CCN Communication Bus 32
RTU Open Control System 34
Supply Air Temperature (SAT) Sensor 37
Outdoor Air Temperature (OAT) Sensor 37
EconoMi$er2 37
Field Connections 38
Space Temperature (SPT) Sensors 38
Indoor Air Quality (CO_2) Sensor 38

Outdoor Air Quality Sensor 39
Space Relative Humidity Sensor or Humidistat . . 39
Smoke Detector/Fire Shutdown (FSD) 40
Connecting Discrete Inputs 40
Communication Wiring - Protocols 40
General 40
Local Access 41
RTU Open Troubleshooting 41
Outdoor Air Enthalpy Control 43
Differential Enthalpy Control 43
Return Air Enthalpy Sensor 43
Smoke Detectors 43
Step 13 - Adjust Factory-Installed Options 50
Step 14 - Install Accessories 50
START-UP CHECKLIST 51

SAFETY CONSIDERATIONS

Improper installation, adjustment, alteration, service, maintenance, or use can cause explosion, fire, electrical shock or other conditions which may cause personal injury or property damage. Consult a qualified installer, service agency, or your distributor or branch for information or assistance. The qualified installer or agency must use factory-authorized kits or accessories when modifying this product. Refer to the individual instructions packaged with the kits or accessories when installing.

Follow all safety codes. Wear safety glasses and work gloves. Use quenching cloths for brazing operations and have a fire extinguisher available. Read these instructions thoroughly and follow all warnings or cautions attached to the unit. Consult local building codes and appropriate national electrical codes (in USA, ANSI/NFPA70, National Electrical Code (NEC); in Canada, CSA C22.1) for special requirements.

It is important to recognize safety information. This is the safety-alert symbol ⚠. When you see this symbol on the unit and in instructions or manuals, be alert to the potential for personal injury.

Understand the signal words DANGER, WARNING, CAUTION, and NOTE. These words are used with the safety-alert symbol. DANGER identifies the most serious hazards which **will** result in severe personal injury or death. WARNING signifies hazards which **could** result in personal injury or death. CAUTION is used to identify unsafe practices, which **may** result in minor personal injury or product and property damage. NOTE is used to highlight suggestions which **will** result in enhanced installation, reliability, or operation.

⚠ WARNING

FIRE, EXPLOSION HAZARD

Failure to follow this warning could result in personal injury or death.

Disconnect gas piping from unit when leak testing at pressure greater than 0.5 psig (3450 Pa). Pressures greater than 0.5 psig (3450 Pa) will cause gas valve damage resulting in hazardous condition. If gas valve is subjected to pressure greater than 0.5 psig (3450 Pa), it must be replaced before use. When pressure testing field-supplied gas piping at pressures of 0.5 psig (3450 Pa) or less, a unit connected to such piping must be isolated by closing the manual gas valve.

⚠ WARNING

ELECTRICAL SHOCK HAZARD

Failure to follow this warning could cause personal injury or death.

Before performing service or maintenance operations on unit, always turn off main power switch to unit and install lock(s) and lockout tag(s). Unit may have more than one power switch.

⚠ WARNING

UNIT OPERATION AND SAFETY HAZARD

Failure to follow this warning could cause personal injury, death and/or equipment damage.

Puron® (R-410A) refrigerant systems operate at higher pressures than standard R-22 systems. Do not use R-22 service equipment or components on Puron refrigerant equipment.

⚠ WARNING

PERSONAL INJURY AND ENVIRONMENTAL HAZARD

Failure to follow this warning could cause personal injury or death.

Relieve pressure and recover all refrigerant before system repair or final unit disposal.

Ware safety glasses and gloves when handling refrigerants. Keep torches and other ignition sources away from refrigerants and oils.

⚠ CAUTION

CUT HAZARD

Failure to follow this caution may result in personal injury.
Sheet metal parts may have sharp edges or burrs. Use care and wear appropriate protective clothing, safety glasses and gloves when handling parts and servicing air conditioning equipment.

Rated Indoor Airflow (cfm)

The table to the right lists the rated indoor airflow used for the AHRI efficiency rating for the units covered in this document.

Model Number	Full Load Airflow (cfm)
48TC*A08	2400
48TC*D/E08	2250
48TC*A09	3000
48TC*D/E09	3400
48TC*A12	3600
48TC*D/E12	3000
48TC*D/E14	3600

Position:	1	2	3	4	5	6	7	8	9	10	11	12	13	14	15	16	17	18
Example:	4	8	T	C	D	A	0	8	A	1	A	5	-	0	A	0	A	0

Unit Heat Type
48 - Gas Heat Packaged Rooftop

Model Series - WeatherMaker™
TC - Standard Efficiency

Heat Options
D = Low Heat
E = Medium Heat
F = High Heat
S = Low Heat w/ Stainless Steel Exchanger
R = Medium Heat w/ Stainless Steel Exchanger
T = High Heat w/ Stainless Steel Exchanger

Refrig. Systems Options
A = Standard One Stage Cooling Models (sizes 08-12)
D = Two Stage Cooling Models
E = Two Stage Cooling Models with Al/Cu Condenser Coils and Humidi-MiZer®

Cooling Tons
08 = 7.5 tons
09 = 8.5 tons
12 = 10 tons
14 = 12.5 tons

Sensor Options
A = None
B = RA Smoke Detector
C = SA Smoke Detector
D = RA + SA Smoke Detector
E = CO_2
F = RA Smoke Detector and CO_2
G = SA Smoke Detector and CO_2
H = RA + SA Smoke Detector and CO_2

Indoor Fan Options
1 = Standard Static Option
2 = Medium Static Option
3 = High Static Option

Coil Options – RTPF (Outdoor - Indoor - Hail Guard)
A = Al/Cu - Al/Cu
B = Precoat Al/Cu - Al/Cu
C = E-coat Al/Cu - Al/Cu
D = E-coat Al/Cu - E-coat Al/Cu
E = Cu/Cu - Al/Cu
F = Cu/Cu - Cu/Cu
M = Al/Cu -Al/Cu — Louvered Hail Guard
N = Precoat Al/Cu - Al/Cu — Louvered Hail Guard
P = E-coat Al/Cu - Al/Cu — Louvered Hail Guard
Q = E-coat Al/Cu - E-coat Al/Cu — Louvered Hail Guard
R = Cu/Cu - Al/Cu — Louvered Hail Guard
S = Cu/Cu - Cu/Cu — Louvered Hail Guard

Coil Options – Novation (Outdoor - Indoor - Hail Guard)
G = Al/Al - Al/Cu
H = Al/Al - Cu/Cu
J = Al/Al - E-coat Al/Cu
K = E-coat Al/Al - Al/Cu
L = E-coat Al/Al - E-coatAl/Cu
T = Al/Al - Al/Cu — Louvered Hail Guard
U = Al/Al - Cu/Cu — Louvered Hail Guard
V = Al/Al - E-coat Al/Cu — Louvered Hail Guard
W= E-coat Al/Al - Al/Cu — Louvered Hail Guard
X = E-coat Al/Al - E-coat Al/Cu — Louvered Hail Guard

Voltage
1 = 575/3/60
5 = 208-230/3/60
6 = 460/3/60

Design Revision
- = Factory Design Revision

Base Unit Controls
0 = Electromechanical Controls can be used with W7212 EconoMi$er IV (Non-Fault Detection and Diagnostic)
1 = PremierLink Controller
2 = RTU Open Multi-Protocol Controller
6 = Electro-mechanical w/ 2-Speed Fan and W7220 Economizer Controller Controls. Can be used with W7220 EconoMi$er X (w/ Fault Detection & Diagnostic)
D = ComfortLink Controls

Intake / Exhaust Options
A = None
B = Temperature Economizer w/ Barometric Relief
F = Enthalpy Economizer w/ Barometric Relief
K = 2-Position Damper
U = Temperature Ultra Low Leak Economizer w/ Barometric Relief
W= Enthalpy Ultra Low Leak Economizer w/ Barometric Relief

Service Options
0 = None
1 = Unpowered Convenience Outlet
2 = Powered Convenience Outlet
3 = Hinged Panels
4 = Hinged Panels and Unpowered Convenience Outlet
5 = Hinged Panels and Powered Convenience Outlet

Electrical Options
A = None
C = Non-Fused Disconnect
D = Thru-The-Base Connections
F = Non-Fused Disconnect and Thru-The-Base Connections
G = 2-Speed Indoor Fan Controller (VFD)
J = 2 Speed Indoor Fan Controller (VFD) and Non-Fused Disconnect
K = 2-Speed Indoor Fan Controller (VFD) and Thru-The-Base Connections
M = 2-Speed Indoor Fan Controller (VFD) with Non-Fused Disconnect and Thru-The-Base Connections

Packaging & Seismic Complience
0 = Standard
1 = LTL
3 = California Seismic Compliant Label
4 = LTL and CA Seismic Compliant Label

C150001

Fig. 1 - 48TC 08-12 Model Number Nomenclature (Example)

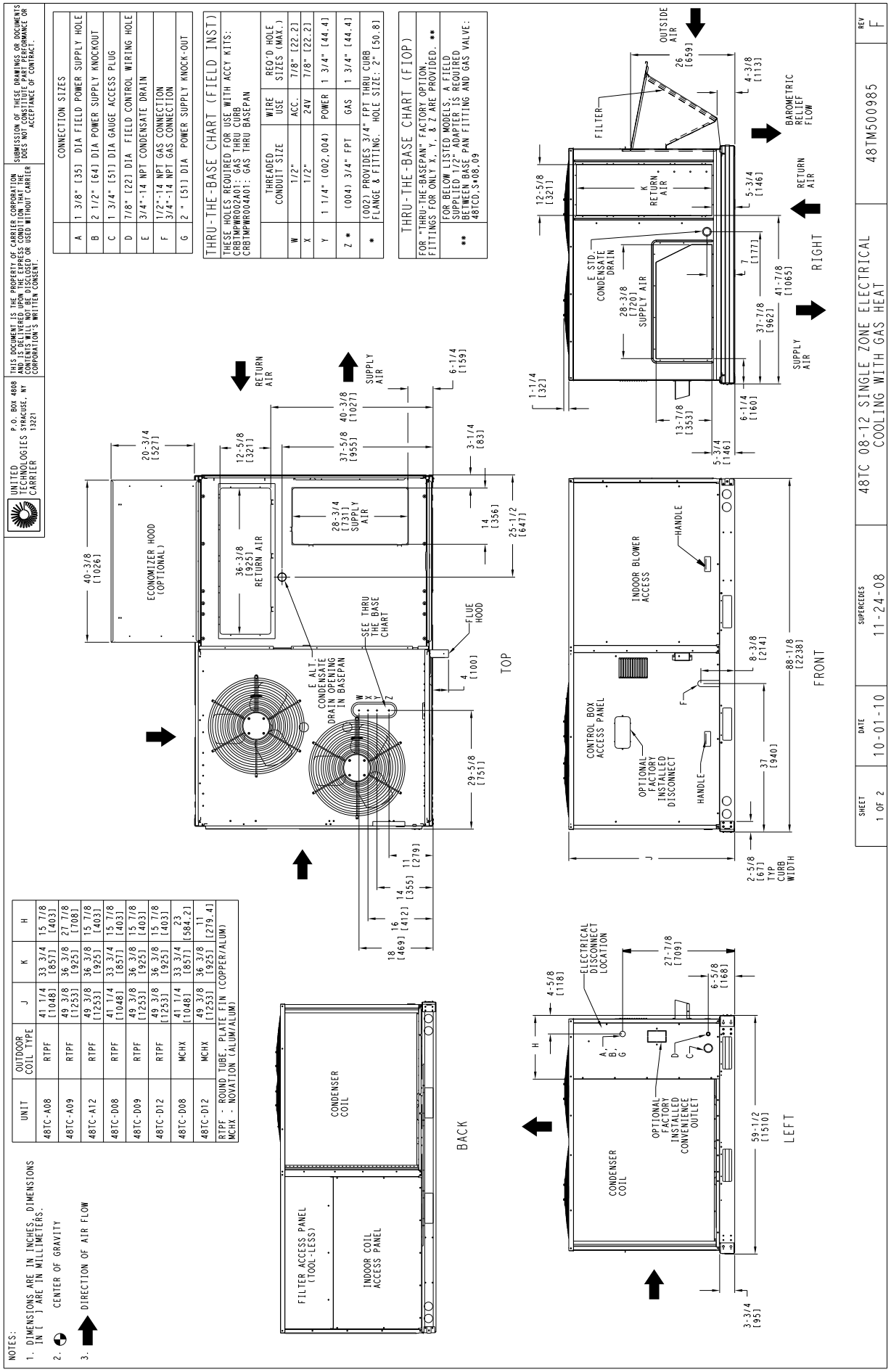

C10292A

Fig. 2 - Unit Dimensional Drawing — Sizes 08, 09 and 12

UNIT	OUTDOOR COIL TYPE	STD. UNIT WEIGHT ***		CORNER WEIGHT (A)		CORNER WEIGHT (B)		CORNER WEIGHT (C)		CORNER WEIGHT (D)		C.G.		
		LBS.	KG.	LBS.	KG.	LBS.	KG.	LBS.	KG.	LBS.	KG.	X	Y	Z
48TC-A08	RTPF	780	354	178	81	158	72	209	95	236	107	41 1/2 [1054]	33 7/8 [860]	20 1/2 [521]
48TC-A09	RTPF	920	418	212	96	183	83	243	110	282	128	40 7/8 [1038]	34 [864]	23 1/8 [587]
48TC-A12	RTPF	930	422	216	98	196	89	247	112	272	123.5	42 [1067]	33 1/8 [841]	24 1/4 [616]
48TC-D08	RTPF	835	379	164	74.5	170	77.2	255	115.8	246	111.7	44 7/8 [1140]	35 5/8 [905]	19 3/8 [492]
48TC-D09	RTPF	930	422	228	103.5	187	85	232	105.3	283	128.5	39 3/4 [1010]	32 7/8 [835]	18 5/8 [473]
48TC-D12	RTPF	940	427	231	104.9	189	85.8	234	106.2	286	129.8	39 3/4 [1010]	33 [838]	18 1/2 [470]
48TC-D08	MCHX	805	365.5	160	72.6	153	69.5	240	109	260	118	43 [1092]	36 3/8 [924]	20 3/8 [517.7]
48TC-D12	MCHX	895	406.3	185	84	176	79.9	260	118	274	124.4	42 7/8 [1089]	35 1/2 [902]	22 7/8 [581]

RTPF - ROUND TUBE, PLATE FIN (COPPER/ALUM)
MCHX - NOVATION (ALUM/ALUM)

UNITED TECHNOLOGIES CARRIER P.O. BOX 4808 SYRACUSE, NY 13221

THIS DOCUMENT IS THE PROPERTY OF CARRIER CORPORATION AND IS DELIVERED UPON THE EXPRESS CONDITION THAT THE CONTENTS WILL NOT BE DISCLOSED OR USED WITHOUT CARRIER CORPORATION'S WRITTEN CONSENT.

SUBMISSION OF THESE DRAWINGS OR DOCUMENTS DOES NOT CONSTITUTE PART PERFORMANCE OR ACCEPTANCE OF CONTRACT.

*** STANDARD UNIT WEIGHT IS WITH LOW GAS HEAT AND WITHOUT PACKAGING.
FOR OTHER OPTIONS AND ACCESSORIES, REFER TO THE PRODUCT DATA CATALOG.

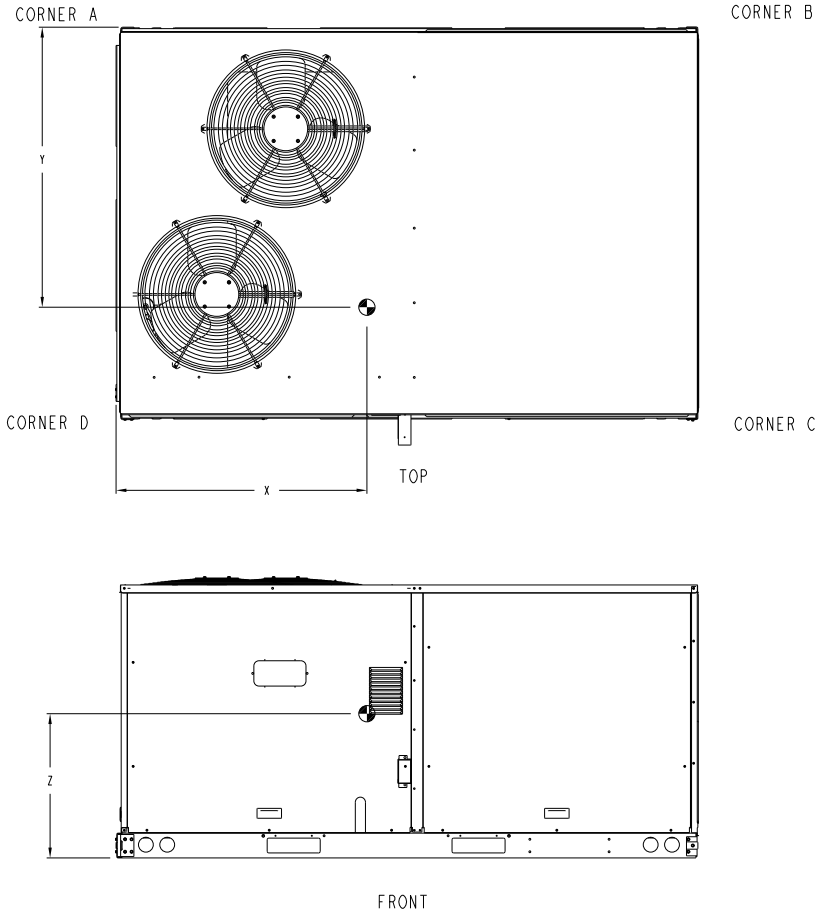

SHEET	DATE	SUPERCEDES			REV
2 OF 2	10-01-10	11-24-08	48TC 08-12 SINGLE ZONE ELECTRICAL COOLING WITH GAS HEAT	48TM500985	F

Fig. 2 - Unit Dimensional Drawing — Sizes 08, 09 and 12 (cont.)

C10293A

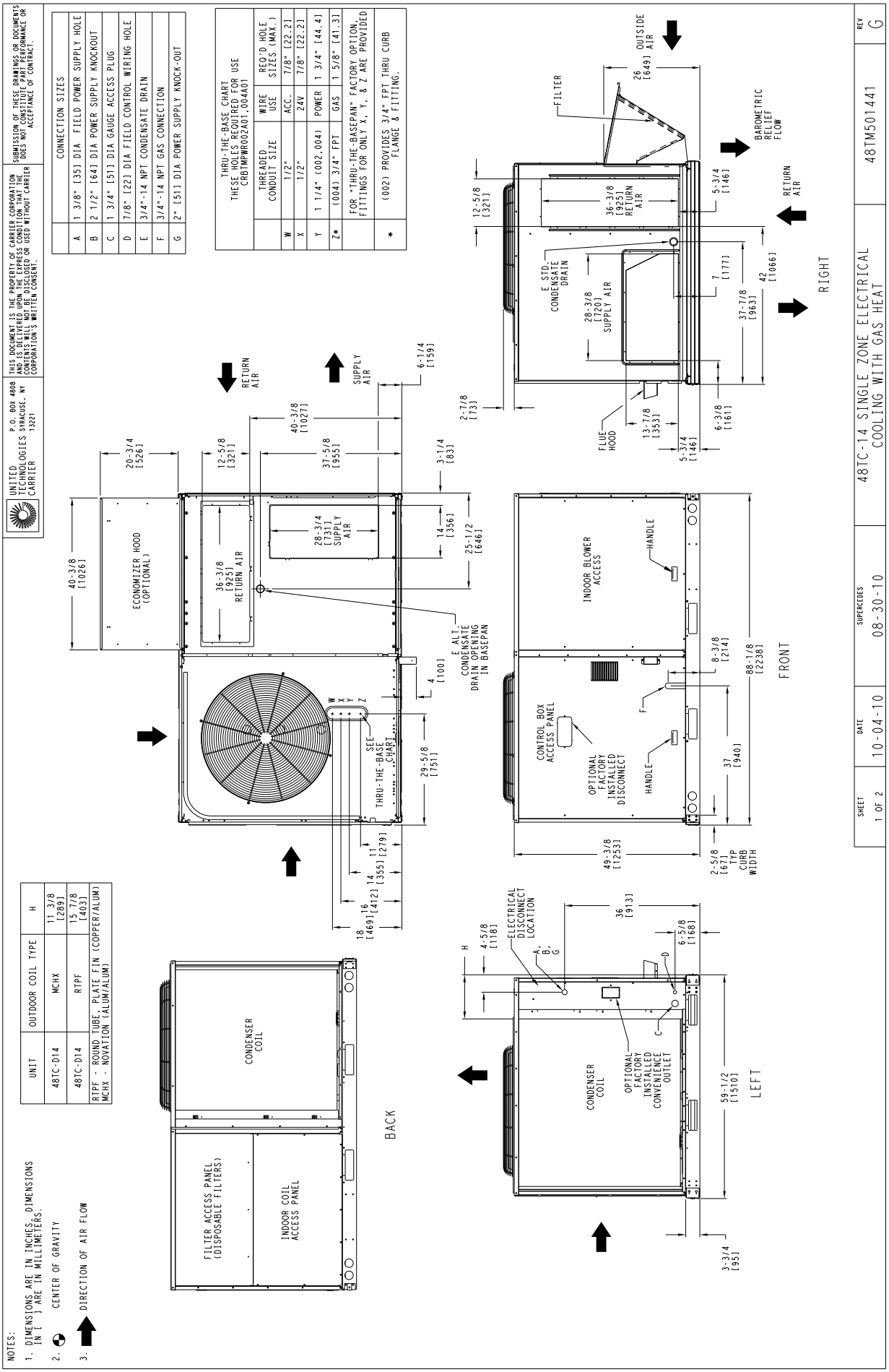

C09648A

Fig. 3 - Unit Dimensional Drawing — Size 14

UNIT	OUTDOOR COIL TYPE	STD. UNIT WEIGHT***		CORNER WEIGHT (A)		CORNER WEIGHT (B)		CORNER WEIGHT (C)		CORNER WEIGHT (D)		C.G.		
		LBS.	KG.	LBS.	KG.	LBS.	KG.	LBS.	KG.	LBS.	KG.	X	Y	Z
48TC-D14	MCHX	1116	506	297	135	157	71	229	104	434	197	29 1/2 [749]	34 1/4 [870]	20 1/4 [514]
48TC-D14	RTPF	1167	530	349	159	167	76	211	96	440	200	31 3/8 [797]	34 3/4 [883]	21 7/8 [556]

RTPF - ROUND TUBE, PLATE FIN (COPPER/ALUM)
MCHX - MICROCHANNEL (ALUM/ALUM)

UNITED TECHNOLOGIES CARRIER P.O. BOX 4808 SYRACUSE, NY 13221

THIS DOCUMENT IS THE PROPERTY OF CARRIER CORPORATION AND IS DELIVERED UPON THE EXPRESS CONDITION THAT THE CONTENTS WILL NOT BE DISCLOSED OR USED WITHOUT CARRIER CORPORATION'S WRITTEN CONSENT.

SUBMISSION OF THESE DRAWINGS OR DOCUMENTS DOES NOT CONSTITUTE PART PERFORMANCE OR ACCEPTANCE OF CONTRACT.

*** STANDARD UNIT WEIGHT IS WITH LOW GAS HEAT AND WITHOUT PACKAGING.
FOR OTHER OPTIONS AND ACCESSORIES, REFER TO THE PRODUCT DATA CATALOG.

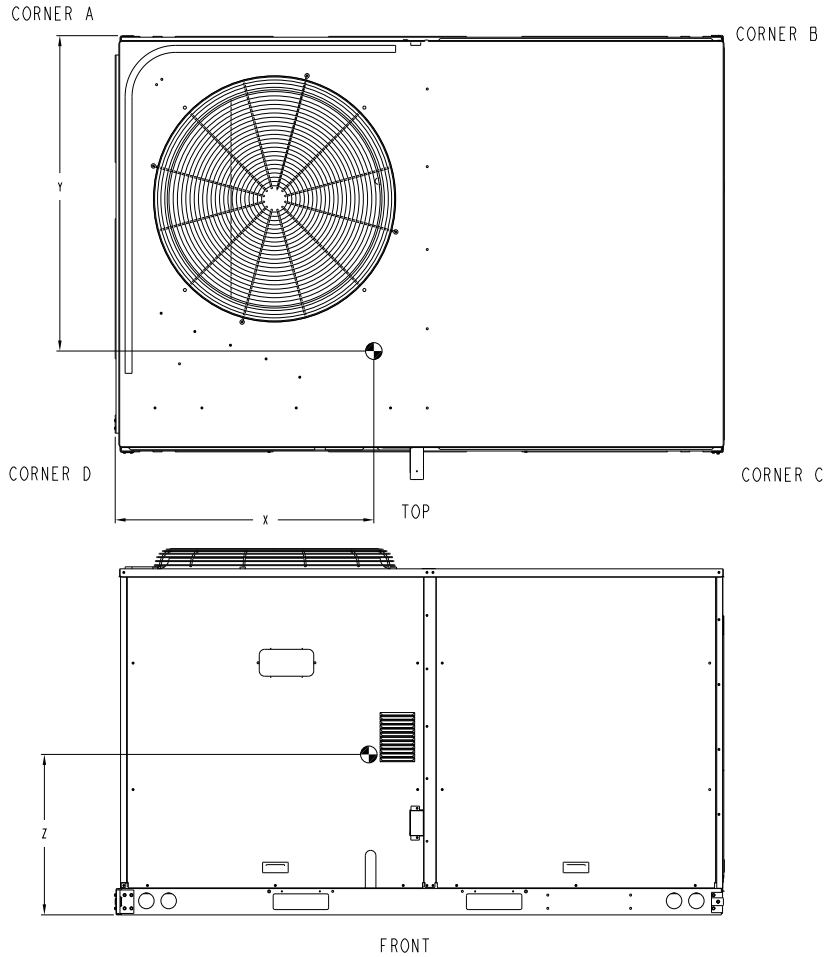

SHEET	DATE	SUPERCEDES			REV
2 OF 2	10-04-10	08-30-10	48TC-14 SINGLE ZONE ELECTRICAL COOLING WITH GAS HEAT	48TM501441	G

Fig. 3 - Unit Dimensional Drawing — Size 14 (cont.)

C10326B

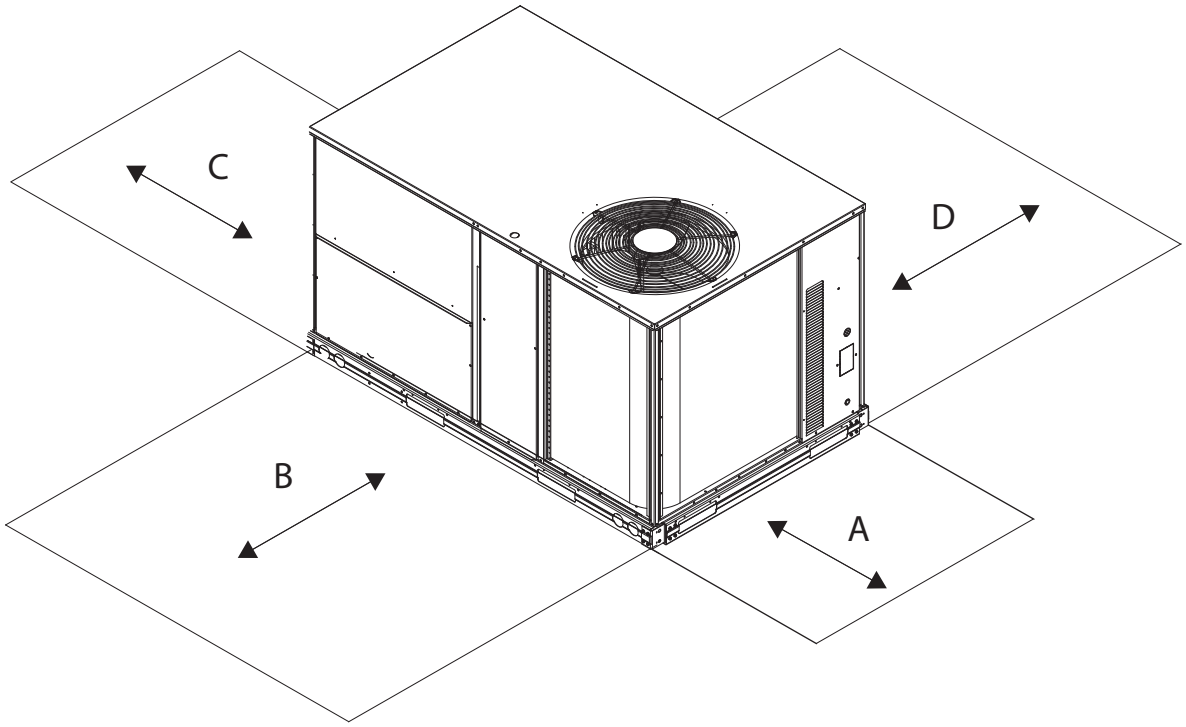

C08337

LOCATION	DIMENSION	CONDITION
A	48 – in (1219 mm) 18 – in (457 mm) 18 – in (457) mm 12 – in (305 mm)	Unit disconnect is mounted on panel No disconnect, convenience outlet option Recommended service clearance Minimum clearance
B	42 – in (1067 mm) 36 – in (914 mm) Special	Surface behind servicer is grounded (e.g., metal, masonry wall) Surface behind servicer is electrically non – conductive (e.g., wood, fiberglass) Check sources of flue products within 10 – ft of unit fresh air intake hood
C	36 – in (914 mm) 18 – in (457 mm)	Side condensate drain is used Minimum clearance
D	48 – in (1219 mm) 42 – in (1067 mm) 36 – in (914 mm) Special	No flue discharge accessory installed, surface is combustible material Surface behind servicer is grounded (e.g., metal, masonry wall, another unit) Surface behind servicer is electrically non – conductive (e.g., wood, fiberglass) Check for adjacent units or building fresh air intakes within 10 – ft (3 m) of this unit's flue outlet

NOTE: Unit not designed to have overhead obstruction. Contact Application Engineering for guidance on any application planning overhead obstruction or for vertical clearances.

Fig. 4 - Service Clearance Dimensional Drawing

INSTALLATION

Jobsite Survey

Complete the following checks before installation.

1. Consult local building codes and the NEC (National Electrical Code) ANSI/NFPA 70 for special installation requirements.
2. Determine unit location (from project plans) or select unit location.
3. Check for possible overhead obstructions which may interfere with unit lifting or rigging.

Step 1 — Plan for Unit Location

Select a location for the unit and its support system (curb or other) that provides for the minimum clearances required for safety. This includes the clearance to combustible surfaces, unit performance and service access below, around and above unit as specified in unit drawings. See Fig. 4.

NOTE: Consider also the effect of adjacent units.

Be sure that the unit is installed such that snow will not block the combustion intake or flute outlet.

Unit may be installed directly on wood flooring or on Class A, B, or C roof-covering material when roof curb is used.

Do not install unit in an indoor location. Do not locate air inlets near exhaust vents or other sources of contaminated air. For proper unit operation, adequate combustion and ventilation air must be provided in accordance with Section 5.3 (Air for Combustion and Ventilation) of the National Fuel Gas Code, ANSI Z223.1 (American National Standards Institute) and NFPA (National Fire Protection Association) 54 TIA--54--84--1. In Canada, installation must be in accordance with the CAN1--B149 installation codes for gas burning appliances.

Although unit is weatherproof, avoid locations that permit water from higher level runoff and overhangs to fall onto the unit.

Locate mechanical draft system flue assembly at least 4 ft (1.2 m) from any opening through which combustion products could enter the building, and at least 4 ft (1.2 m) from any adjacent building (or per local code). Locate the flue assembly at least 10 ft (3.05 m) from an adjacent unit's fresh air intake hood if within 3 ft (0.91 m) of same elevation (or per local code). When unit is located adjacent to public walkways, flue assembly must be at least 7 ft (2.1 m) above grade.

Select a unit mounting system that provides adequate height to allow installation of condensate trap per requirements. Refer to Step 11 — Install External Condensate Trap and Line – for required trap dimensions.

Roof Mount —

Check building codes for weight distribution requirements. Unit operating weight is shown in Table 1.

Step 2 — Plan for Sequence of Unit Installation

The support method used for this unit will dictate different sequences for the steps of unit installation. For example, on curb-mounted units, some accessories must be installed on the unit before the unit is placed on the curb. Review the following for recommended sequences for installation steps.

Curb-Mounted Installation —

Install curb

Install field-fabricated ductwork inside curb

Install accessory thru-base service connection package (affects curb and unit) (refer to accessory installation instructions for details)

Prepare bottom condensate drain connection to suit planned condensate line routing (refer to Step 11 for details)

Rig and place unit

Install outdoor air hood

Install flue hood

Install gas piping

Install condensate line trap and piping

Make electrical connections

Install other accessories

Pad-Mounted Installation —

Prepare pad and unit supports

Check and tighten the bottom condensate drain connection plug

Rig and place unit

Convert unit to side duct connection arrangement

Install field-fabricated ductwork at unit duct openings

Install outdoor air hood

Install flue hood

Install gas piping

Install condensate line trap and piping

Make electrical connections

Install other accessories

Frame-Mounted Installation —

Frame-mounted applications generally follow the sequence for a curb installation. Adapt as required to suit specific installation plan.

Step 3 — Inspect Unit

Inspect unit for transportation damage. File any claim with transportation agency.

Confirm before installation of unit that voltage, amperage and circuit protection requirements listed on unit data plate agree with power supply provided.

Step 4 — Provide Unit Support

Roof Curb Mount —

Accessory roof curb details and dimensions are shown in Fig. 5. Assemble and install accessory roof curb in accordance with instructions shipped with the curb.

NOTE: The gasketing of the unit to the roof curb is critical for a watertight seal. Install gasket supplied with the roof curb as shown in Fig. 5. Improperly applied gasket can also result in air leaks and poor unit performance.

Table 1 – Operating Weights

UNIT / COIL TYPE	UNITS LB (KG)			
	08	09	12	14
48TC*– –A / RTPF	780 (354)	920 (418)	930 (422)	N/A
48TC*– –D / RTPF	835 (379)	930 (422)	940 (427)	1167 (530)
48TC*– –D / MCHX	805 (366)	N/A	895(406)	1116 (506)
OPTIONS & ACCESSORES				
Economizer				
Vertical	75 (34)	75 (34)	75 (34)	75 (34)
Horizontal	122 (55)	122 (55)	122 (55)	122 (55)
Powered Outlet	35 (16)	35 (16)	35 (16)	35 (16)
Humidi–MiZer® System	80 (36)	80 (36)	80 (36)	85 (39)
Curb				
14–in/356 mm	143 (65)	143 (65)	143 (65)	143 (65)
24–in/610 mm	245 (111)	245 (111)	245 (111)	245 (111)

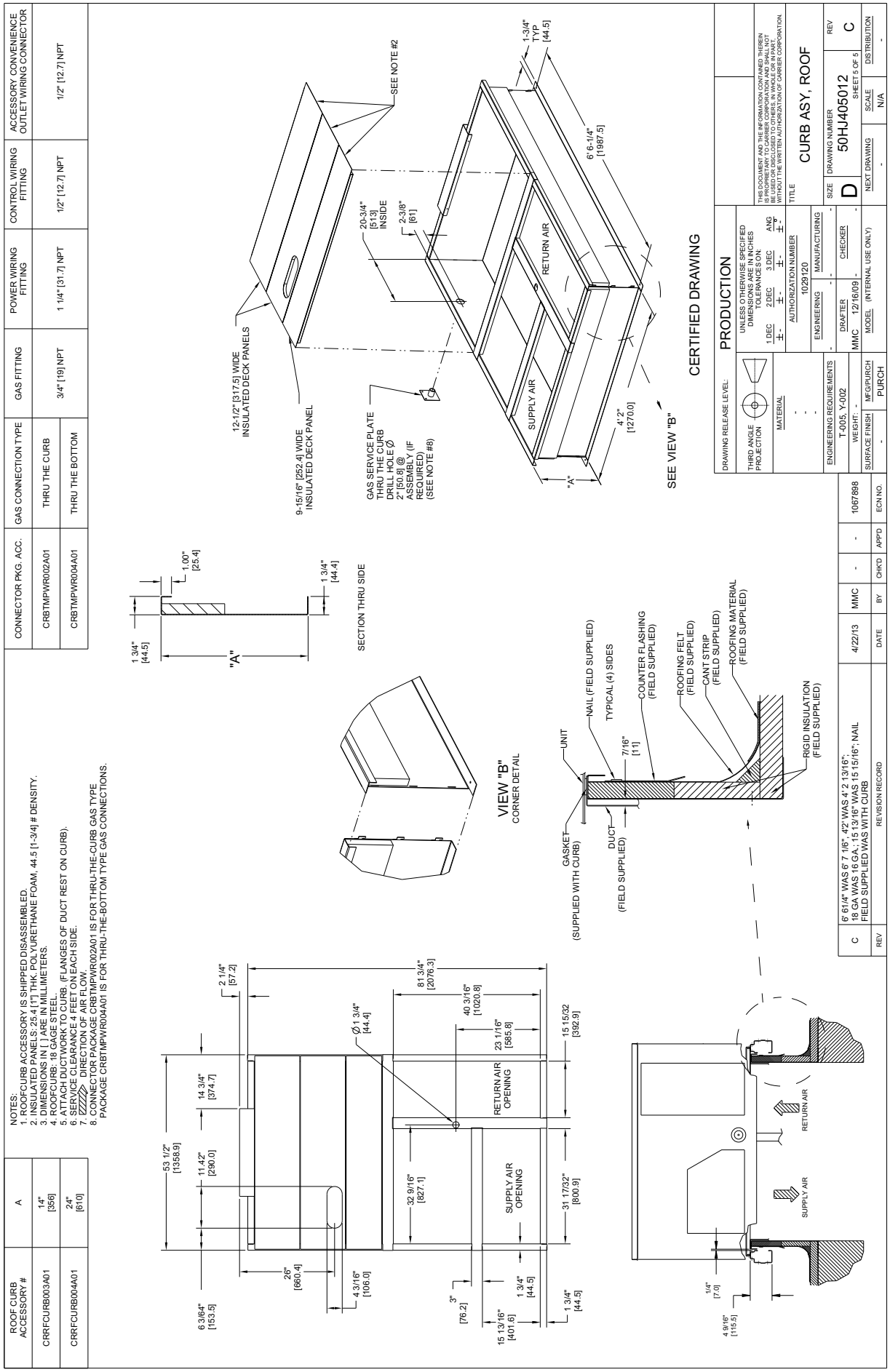

ROOF CURB ACCESSORY #	A
CRRFCURB003A01	14" [356]
CRRFCURB004A01	24" [610]

CONNECTOR PKG. ACC.	GAS CONNECTION TYPE	GAS FITTING	POWER WIRING FITTING	CONTROL WIRING FITTING	ACCESSORY CONVENIENCE OUTLET WIRING CONNECTOR
CRBTMPWR002A01	THRU THE CURB	3/4" [19] NPT	1 1/4" [31.7] NPT	1/2" [12.7] NPT	1/2" [12.7] NPT
CRBTMPWR004A01	THRU THE BOTTOM				

C13311

Fig. 5 - Roof Curb Details

Curb should be level. This is necessary for unit drain to function properly. Unit leveling tolerances are show in Fig. 6. Refer to Accessory Roof Curb Installation Instructions for additional information as required.

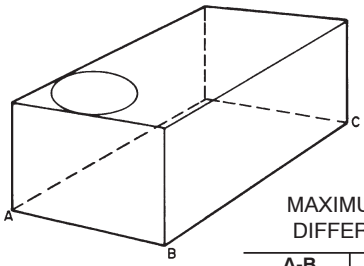

MAXIMUM ALLOWABLE DIFFERENCE IN. (MM)

A-B	B-C	A-C
0.5" (13)	1.0" (25)	1.0" (25)

C06110

Fig. 6 - Unit Leveling Tolerances

Install insulation, cant strips, roofing felt, and counter flashing as shown. *Ductwork must be attached to curb and not to the unit. The accessory thru-the-base power and gas connection package must be installed before the unit is set on the roof curb.* If field-installed thru-the-roof curb gas connections are desired, use factory-supplied pipe coupling and gas plate assembly to mount the thru-the-roof curb connection to the roof curb. Gas connections and power connections to the unit must be field installed after the unit is installed on the roof curb.

If electric and control wiring is to be routed through the basepan, attach the accessory thru-the-base service connections to the basepan in accordance with the accessory installation instructions.

Slab Mount (Horizontal Units Only) —

Provide a level concrete slab that extends a minimum of 6 in. (150 mm) beyond unit cabinet. Install a gravel apron in front of condenser coil air inlet to prevent grass and foliage from obstructing airflow.

NOTE: Horizontal units may be installed on a roof curb if required.

Alternate Unit Support
(In Lieu of Curb or Slab Mount) —

A non-combustible sleeper rail can be used in the unit curb support area. If sleeper rails cannot be used, support the long sides of the unit with a minimum of 3 equally spaced 4-in. x 4-in. (102 mm x 102 mm) pads on each side.

Step 5 — Field Fabricate Ductwork

Cabinet return-air static pressure (a negative condition) shall not exceed 0.35 in. wg (87 Pa) with economizer or 0.45 in. wg (112 Pa) without economizer.

For vertical ducted applications, secure all ducts to roof curb and building structure. *Do not connect ductwork to unit.*

Fabricate supply ductwork so that the cross sectional dimensions are equal to or greater than the unit supply duct opening dimensions for the first 18 in. (458 mm) of duct length from the unit basepan.

Insulate and weatherproof all external ductwork, joints, and roof openings with counter flashing and mastic in accordance with applicable codes.

Ducts passing through unconditioned spaces must be insulated and covered with a vapor barrier.

If a plenum return is used on a vertical unit, the return should be ducted through the roof deck to comply with applicable fire codes.

A minimum clearance is not required around ductwork.

⚠ CAUTION

PROPERTY DAMAGE HAZARD

Failure to follow this caution may result in damage to roofing materials.

Membrane roofs can be cut by sharp sheet metal edges. Be careful when placing any sheet metal parts on such roof.

Step 6 — Rig and Place Unit

Keep unit upright and do not drop. Spreader bars are not required if top crating is left on unit. Rollers may be used to move unit across a roof. Level by using unit frame as a reference. See Table 1 and Fig. 7 for additional information.

Lifting holes are provided in base rails as shown in Fig. 7. Refer to rigging instructions on unit.

Rigging materials under unit (cardboard to prevent base pan damage) must be removed PRIOR to placing the unit on the roof curb.

When using the standard side drain connection, ensure the red plug in the alternate bottom connection is tight. Do this before setting the unit in place. The red drain pan can be tightened with a $^1/_2$-in. square socket drive extension. For further details see "Step 11 - Install External Condensate Trap and Line on page 17.

Before setting the unit onto the curb, recheck gasketing on curb.

⚠ CAUTION

UNIT DAMAGE HAZARD

Failure to follow this caution may result in equipment damage.

All panels must be in place when rigging. Unit is not designed for handling by fork truck.

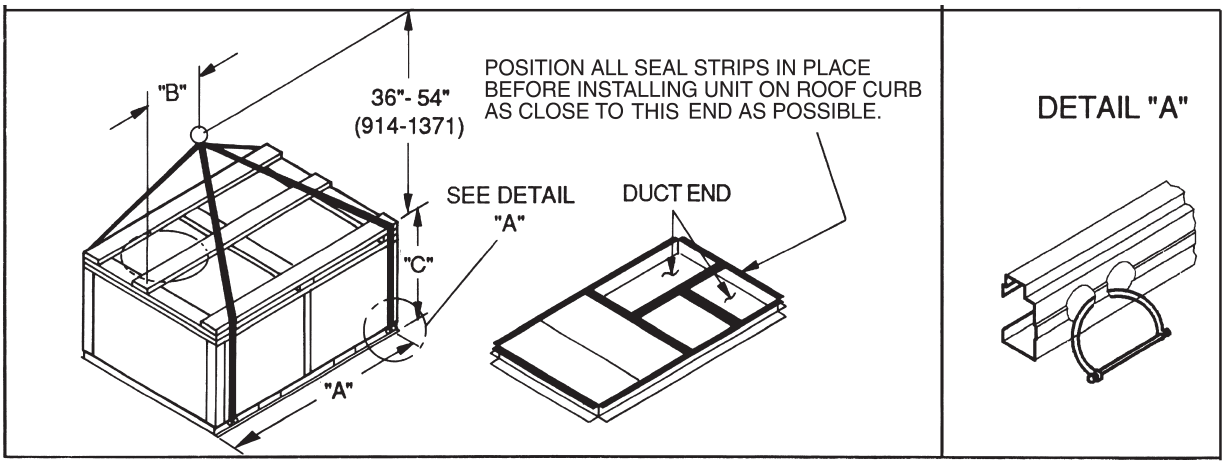

C06005

UNIT	MAX WEIGHT		DIMENSIONS					
			A		B		C	
	LB	KG	IN	MM	IN	MM	IN	MM
48TC*A08	1325	602	88.0	2235	42.0	1065	41.5	1055
48TC*A09	1440	655	88.0	2235	41.5	1055	49.5	1255
48TC*A12	1550	705	88.0	2235	42.5	1080	49.5	1255
48TC*D/E08	1445	657	88.0	2235	43.0	1090	41.5	1055
48TC*D/E09	1565	711	88.0	2235	42.5	1080	49.5	1255
48TC*D/E12	1605	730	88.0	2235	42.0	1065	49.5	1255
48TC*D/E14	1760	800	88.0	2235	29.5	750	53.0	1345

NOTES:
1. Dimensions in ( ) are in millimeters.
2. SPREADER BARS REQUIRED — Top damage will occur if spreader bars are not used.
3. Hook rigging shackles through holes in base rail, as shown in detail "A." Holes in base rails are centered around the unit center of gravity. Use wooden top to prevent rigging straps from damaging unit.

Fig. 7 - Rigging Details

Positioning on Curb —

Position unit on roof curb so that the following clearances are maintained: $^1/_4$ in. (6.4 mm) clearance between the roof curb and the base rail inside the front and back, 0.0 in. clearance between the roof curb and the base rail inside on the duct end of the unit. This will result in the distance between the roof curb and the base rail inside on the condenser end of the unit being approximately $^1/_4$ in. (6.4 mm).

Although unit is weatherproof, guard against water from higher level runoff and overhangs.

Flue vent discharge must have a minimum horizontal clearance of 4 ft (1220 mm) from electric and gas meters, gas regulators, and gas relief equipment. Minimum distance between unit and other electrically live parts is 48 inches (1220 mm).

Flue gas can deteriorate building materials. Orient unit such that flue gas will not affect building materials. Locate mechanical draft system flue assembly at least 48 in. (1220 mm) from an adjacent building or combustible material.

NOTE: Installation of accessory flue discharge deflector kit will reduce the minimum clearance to combustible material to 18 in. (460 mm).

After unit is in position, remove rigging skids and shipping materials.

Step 7 — Convert to Horizontal and Connect Ductwork (when required)

Unit is shipped in the vertical duct configuration. Unit *without* factory-installed economizer or return air smoke detector option may be field-converted to horizontal ducted configuration. To convert to horizontal configuration, remove screws from side duct opening covers and remove covers. Using the same screws, install covers on vertical duct openings with the insulation-side down. Seals around duct openings must be tight. See Fig. 8.

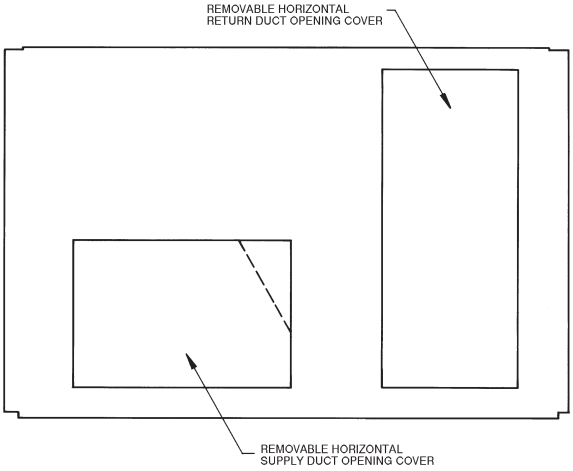

C06108

Fig. 8 - Horizontal Conversion Panels

Field-supplied flanges should be attached to horizontal duct openings and all ductwork should be secured to the flanges. Insulate and weatherproof all external ductwork, joints, and roof or building openings with counter flashing and mastic in accordance with applicable codes.

Do not cover or obscure visibility to the unit's informative data plate when insulating horizontal ductwork.

Step 8 — Install Outside Air Hood

Economizer and Two Position Damper Hood Package Removal and Setup - Factory Option

1. The hood is shipped in knock-down form and must be field assembled. The indoor coil access panel is used as the hood top while the hood sides, divider and filter are packaged together, attached to a metal support tray using plastic stretch wrap, and shipped in the return air compartment behind the indoor coil access panel. The hood assembly's metal tray is attached to the basepan and also attached to the damper using two plastic tie-wraps.
2. To gain access to the hood, remove the filter access panel. (See Fig. 9.)
3. Locate the (2) screws holding the metal tray to the basepan and remove. Locate and cut the (2) plastic tie-wraps securing the assembly to the damper. (See Fig. 10) Be careful to not damage any wiring or cut tie-wraps securing any wiring.
4. Carefully lift the hood assembly (with metal tray) through the filter access opening and assemble per the steps outlined in *Economizer Hood and Two–Position Hood,* below.

Economizer Hood and Two-Position Hood —

NOTE: If the power exhaust accessory is to be installed on the unit, the hood shipped with the unit will not be used and must be discarded. Save the aluminum filter for use in the power exhaust hood assembly.

1. The indoor coil access panel will be used as the top of the hood. Remove the screws along the sides and bottom of the indoor coil access panel. See Fig. 11.
2. Swing out indoor coil access panel and insert the hood sides under the panel (hood top). Use the screws provided to attach the hood sides to the hood top. Use screws provided to attach the hood sides to the unit. See Fig. 12.
3. Remove the shipping tape holding the economizer barometric relief damper in place (economizer only).
4. Insert the hood divider between the hood sides. See Fig. 12 and 13. Secure hood divider with 2 screws on each hood side. The hood divider is also used as the bottom filter rack for the aluminum filter.
5. Open the filter clips which are located underneath the hood top. Insert the aluminum filter into the bottom filter rack (hood divider). Push the filter into position past the open filter clips. Close the filter clips to lock the filter into place. See Fig. 13.
6. Caulk the ends of the joint between the unit top panel and the hood top.
7. Replace the filter access panel.

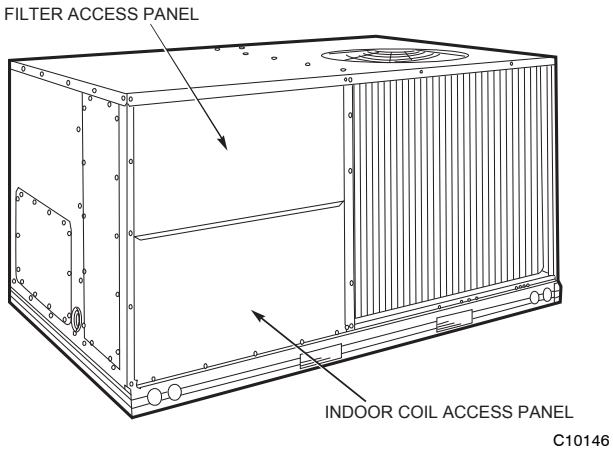

Fig. 9 - Typical Access Panel Locations

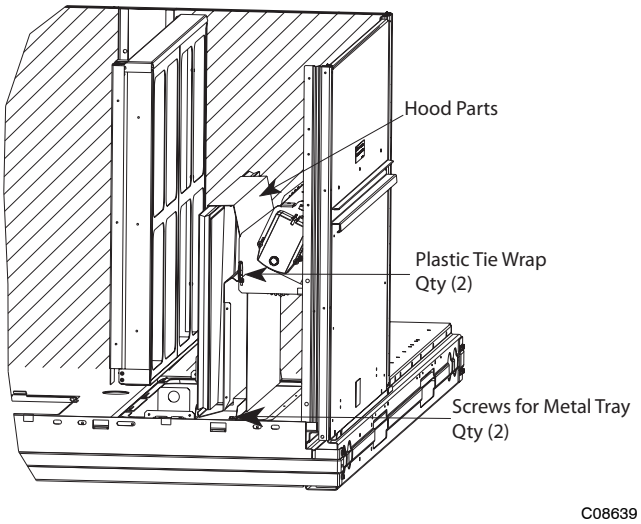

Fig. 10 - Economizer and Two-Position Damper Hood Parts Location

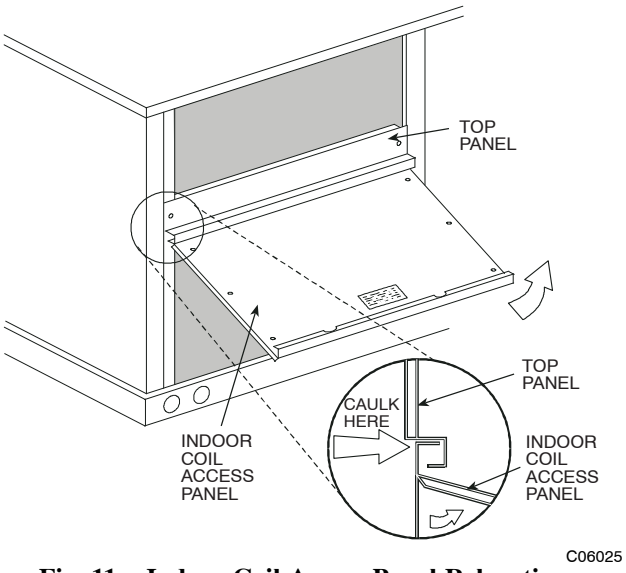

Fig. 11 - Indoor Coil Access Panel Relocation

48TC

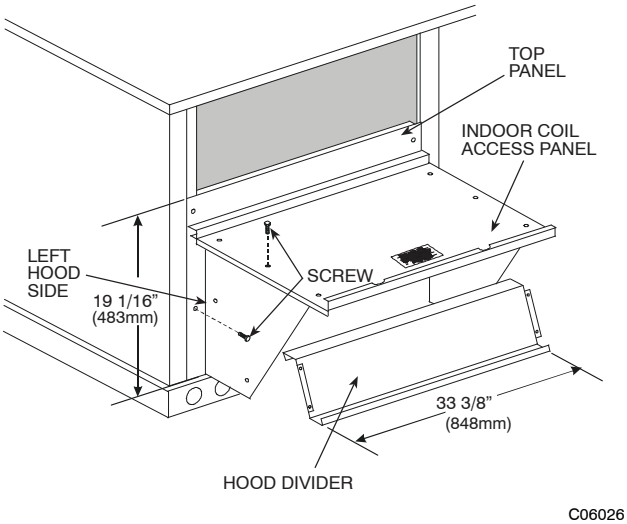

Fig. 12 - Economizer Hood Construction

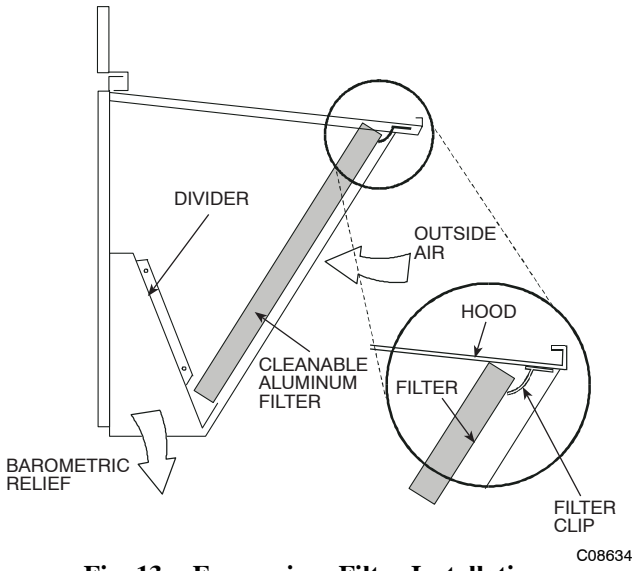

Fig. 13 - Economizer Filter Installation

Step 9 — Install Flue Hood

Flue hood is shipped screwed to the basepan beside the burner compartment access panel. Remove from shipping location and using screws provided, install flue hood and screen in location shown in Fig. 14.

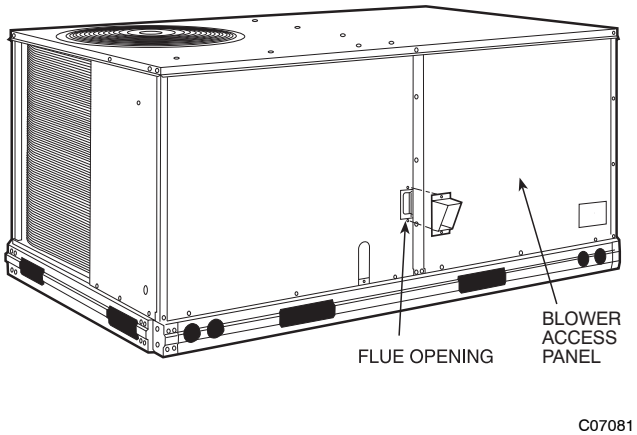

Fig. 14 - Flue Hood Details

Step 10 — Install Gas Piping

Installation of the gas piping must be accordance with local building codes and with applicable national codes. In U.S.A., refer to NFPA 54/ANSI Z223.1 National Fuel Gas Code (NFGC). In Canada, installation must be accordance with the CAN/CSA B149.1 and CAN/CSA B149.2 installation codes for gas burning appliances.

This unit is factory equipped for use with Natural Gas fuel at elevations up to 2000 ft (610 m) above sea level. Unit may be field converted for operation at elevations above 2000 ft (610 m) and/or for use with liquefied petroleum fuel. See accessory kit installation instructions regarding these accessories.

NOTE: Furance gas input rate on rating plate is for installation up to 2000 ft (610 m) above sea level. In U.S.A. the input rating for altitudes above 2000 ft (610 m) must be derated by 4% for each 1000 ft (305 m) above sea level. In Canada the input rating must be derated by 10% for altitudes of 2000 ft (610 m) to 4500 ft (1372 m) above sea level.

For natural gas applications, gas pressure at unit gas connection must not be less than 4 in. wg (996 Pa) or greater than 13 in. wg (3240 Pa) while the unit is operating. For liquified petroleum applications, the gas pressure must not be less than 11 in. wg (2740 Pa) or greater than 13.6 in. wg (3390 Pa) at the unit connection.

Table 2 – Natural Gas Supply Line Pressure Ranges

UNIT MODEL	UNIT SIZE	MIN	MAX
48TCD/E/F/S/R/T*	08, 09, 12, 14	4.0 in. wg (996 Pa)	13.0 in. wg (3240 Pa)

Table 3 – Liquid Propane Supply Line Pressure Ranges

UNIT MODEL	UNIT SIZE	MIN	MAX
48TCD/E/F/S/R/T*	08, 09, 12, 14	11.0 in. wg (2740 Pa)	13.0 in. wg (3240 Pa)

The gas supply pipe enters the unit at the burner access panel on the front side of the unit, through the long slot at the bottom of the access panel. The gas connection to the unit is made to the $^1/_2$-in. or $^3/_4$-in. FPT gas inlet port on the unit gas valve.

Manifold pressure is factory-adjusted for NG fuel use. Adjust as required to obtain best flame characteristics.

Table 4 – Natural Gas Manifold Pressure Ranges

UNIT MODEL	UNIT SIZE	HIGH FIRE	LOW FIRE‡
48TCD/E/F/S/R/T*	08, 09, 12, 14	3.5 in. wg (872 Pa)	2.0 in. wg (498 Pa)
‡NOTE– LOW FIRE, 1.7 in. Wg (423 Pa), applies to the following units only: 48TCD/E/F*08 & 48TCD*09			

Manifold pressure for LP fuel use must be adjusted to specified range. Follow instructions in the accessory kit to make initial readjustment.

Table 5 – Liquid Propane Manifold Pressure Ranges

UNIT MODEL	UNIT SIZE	HIGH FIRE	LOW FIRE‡
48TCD/E/F/S/R/T*	08, 09, 12, 14	10.0 in. wg (2490 Pa)	5.7 in. wg (1420 Pa)
‡NOTE– LOW FIRE, 5.0 in. Wg (1420 Pa), applies to the following units only: 48TCD/E/F*08 & 48TCD*09			

⚠ CAUTION

EQUIPMENT DAMAGE HAZARD

Failure to follow this caution may result in damage to equipment.

When connecting the gas line to the unit gas valve, the installer MUST use a backup wrench to prevent damage to the valve.

Install a gas supply line that runs to the unit heating section. Refer to the NFPA 54/NFGC or equivalent code for gas pipe sizing data. Do not use a pipe smaller than the size specified. Size the gas supply line to allow for a maximum pressure drop of 0.5-in wg (124 Pa) between gas regulator source and unit gas valve connection when unit is operating at high-fire flow rate.

The gas supply line can approach the unit in three ways: horizontally from outside the unit (across the roof), thru-curb/under unit basepan (accessory kit required) or through unit basepan (factory-option or accessory kit required). Consult accessory kit installation instructions for details on these installation methods. Observe clearance to gas line components per Fig. 15.

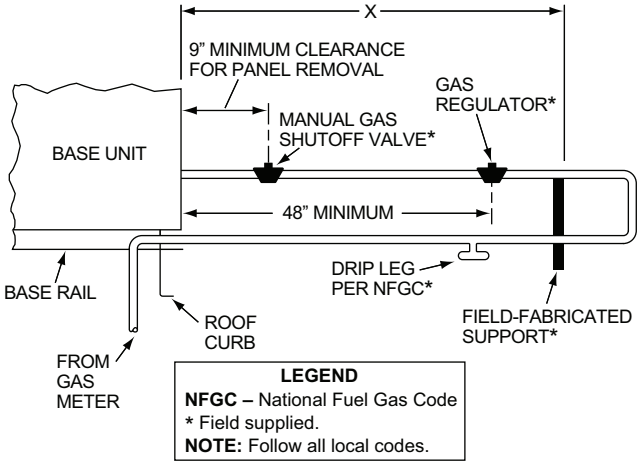

STEEL PIPE NOMINAL DIAMETER (in.)	SPACING OF SUPPORTS X DIMENSION (ft)
1/2	6
3/4 or 1	8
1 1/4 or larger	10

C11091

Fig. 15 - Gas Piping Guide (with Accessory Thru-the-Curb Service Connections)

Factory-Option Thru-Base Connections (Gas Connections) —

This service connection kit consists of a NPT gas adapter fitting, an electrical bulkhead connector and a 3/4-in electrical bulkhead connector, all factory-installed in the embossed (raised) section of the unit basepan in the condenser section.

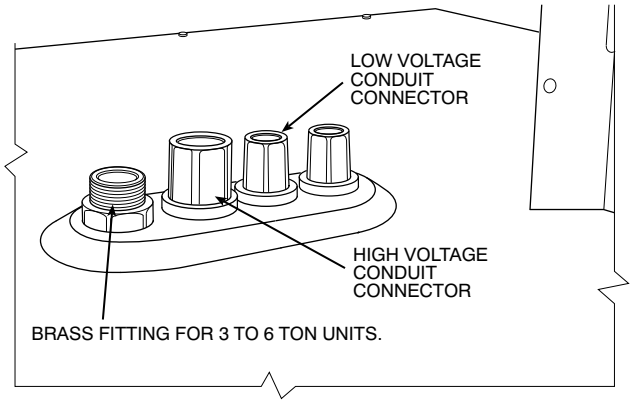

C13410

Fig. 16 - Thru-Base Connection Fittings

The thru-base gas connector has male and female threads. The male threads protrude above the basepan of the unit; the female threads protrude below the basepan.

Check tightness of connector lock nuts before connecting gas piping.

Gas Line: Install a 1/2-in (08 & 09 size Low Gas units only) or 3/4-in (for all other units) NPT street elbow on the thru-base gas fitting. Attach an appropriate size pipe nipple with minimum length of 16-in (406 mm) (field-supplied) to the street elbow and extend it through the access panel at the gas support bracket. See Fig. 17.

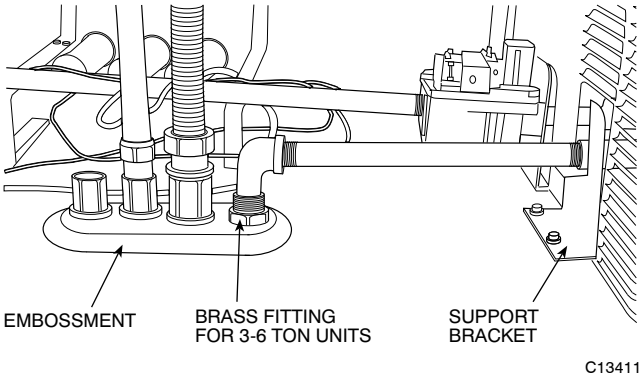

C13411

Fig. 17 - Gas Line Piping

Other hardware required to complete the installation of the gas supply line will include a manual shutoff valve, a sediment trap (drip leg) and a ground-joint union. A pressure regulator valve may also be required (to convert gas pressure from pounds to inches of pressure). The manual shutoff valve must be located within 6-ft (1.83 m) of the unit. The union, located in the final leg entering the unit, must be located at least 9-in (230 mm) away from the access panel to permit the panel to be removed for service. If a regulator valve is installed, it must be located a minimum of 4-ft (1220 mm) away from the unit's flue outlet. Some municipal codes require that the manual shutoff valve be located upstream of the sediment trap. See Fig. 18 and Fig. 19 for typical piping arrangements for gas piping that has been routed through the sidewall of the curb. See Fig. 20 for typical piping arrangement when thru-base is used. Ensure that all piping does not block access to the unit's main control box or limit the required working space in front of the control box.

When installing the gas supply line, observe local codes pertaining to gas pipe installations. Refer to the NFPA 54/ANSI Z223.1 NFGC latest edition (in Canada, CAN/CSA B149.1). In the absence of local building codes, adhere to the following pertinent recommendations:

1. Avoid low spots in long runs of pipe. Grade all pipe $^1/_4$-in. in every 15 ft (7 mm in every 5 m) to prevent traps. Grade all horizontal runs downward to risers. Use risers to connect to heating section and to meter.
2. Protect all segments of piping system against physical and thermal damage. Support all piping with appropriate straps, hangers, etc. Use a minimum of one hanger every 6 ft (1.8 m). For pipe sizes larger than $^1/_2$-in., follow recommendations of national codes.
3. Apply joint compound (pipe dope) sparingly and only to male threads of joint when making pipe connections. Use only pipe dope that is resistant to action of liquefied petroleum gases as specified by local and/or national codes. If using PTFE (Teflon) tape, ensure the material is Double Density type and is labeled for use on gas lines. Apply tape per manufacturer's instructions.
4. Pressure-test all gas piping in accordance with local and national plumbing and gas codes before connecting piping to unit.

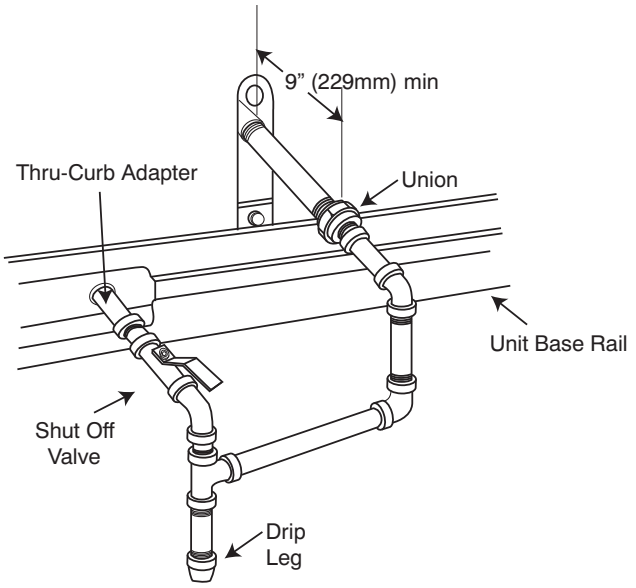

C07469

Fig. 18 - Gas Piping with Thru-Curb Accessory

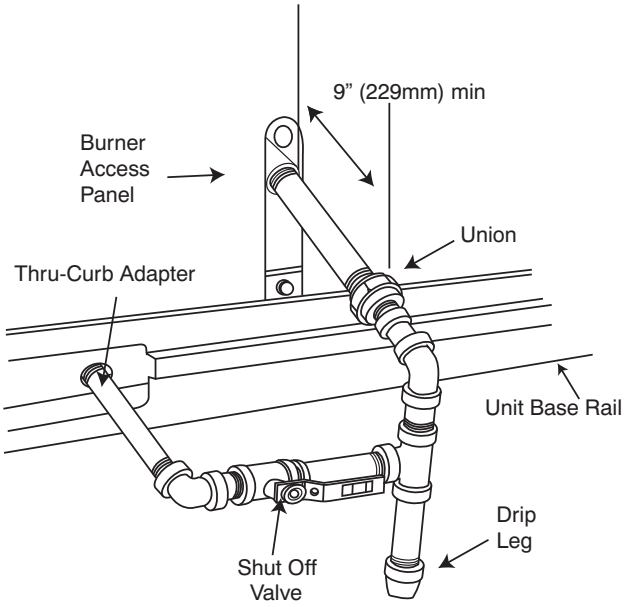

C07470

Fig. 19 - Gas Piping with Thru-Curb Accessory (alternate layout)

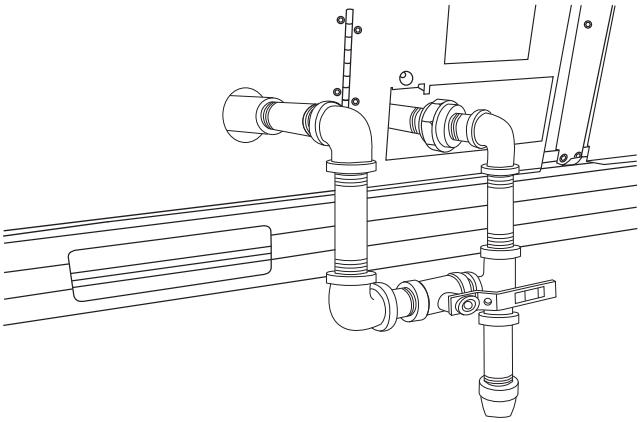

C08018

Fig. 20 - Gas Piping with Thru-Base Accessory

NOTE: Pressure test the gas supply system after the gas supply piping is connected to the gas valve. The supply piping must be disconnected from the gas valve during the testing of the piping systems when test pressure is in excess of 0.5 psig (3450 Pa). Pressure test the gas supply piping system at pressures equal to or less than 0.5 psig (3450 Pa). The unit heating section must be isolated from the gas piping system by closing the external main manual shutoff valve and slightly opening the ground-joint union.

Check for gas leaks at the field-installed and factory-installed gas lines after all piping connections have been completed. Use soap-and-water solution (or method specified by local codes and/or regulations).

⚠ WARNING

FIRE OR EXPLOSION HAZARD

Failure to follow this warning could result in personal injury, death and/or property damage.

- Connect gas pipe to unit using a backup wrench to avoid damaging gas controls.
- Never purge a gas line into a combustion chamber.
- Never test for gas leaks with an open flame. Use a commercially available soap solution made specifically for the detection of leaks to check all connections.
- Use proper length of pipe to avoid stress on gas control manifold.

NOTE: If orifice hole appears damaged or it is suspected to have been redrilled, check orifice hole with a numbered drill bit of correct size. Never redrill an orifice. A burr-free and squarely aligned orifice hole is essential for proper flame characteristics.

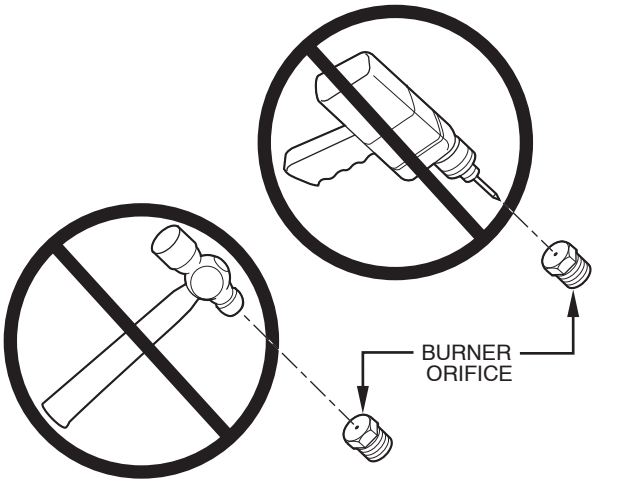

Fig. 21 - Orifice Hole

Step 11 — Install External Condensate Trap and Line

The unit has one $^3/_4$-in. condensate drain connection on the end of the condensate pan and an alternate connection on the bottom. See Fig. 22. Unit airflow configuration does not determine which drain connection to use. Either drain connection can be used with vertical or horizontal applications.

To use the alternate bottom drain connection, remove the red drain plug from the bottom connection (use a $^1/_2$-in. square socket drive extension) and install it in the side drain connection.

The piping for the condensate drain and external trap can be completed after the unit is in place. See Fig. 23.

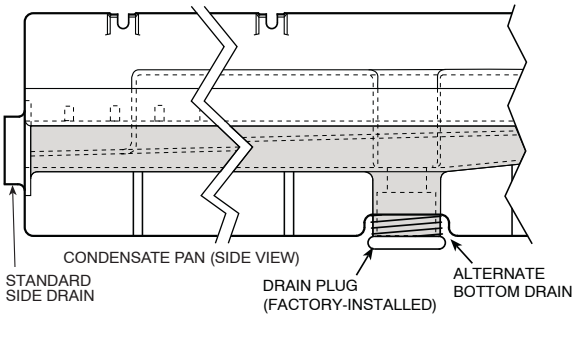

Fig. 22 - Condensate Drain Pan (Side View)

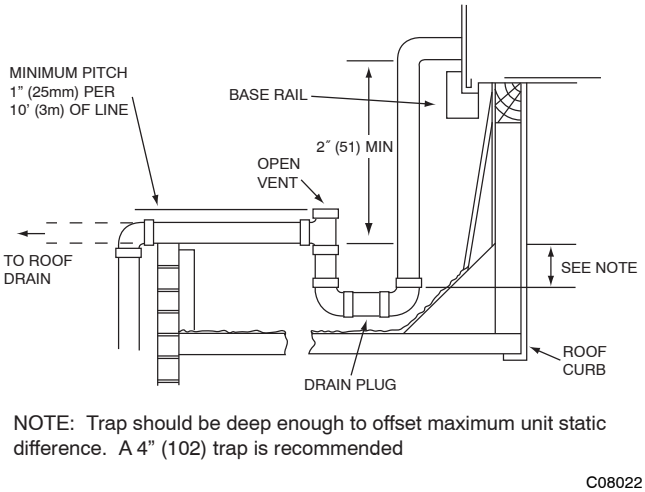

Fig. 23 - Condensate Drain Piping Details

All units must have an external trap for condensate drainage. Install a trap at least 4-in. (102 mm) deep and protect against freeze-up. If drain line is installed downstream from the external trap, pitch the line away from the unit at 1-in. per 10 ft (25 mm in 3 m) of run. Do not use a pipe size smaller than the unit connection ($^3/_4$-in.).

Step 12 — Make Electrical Connections

⚠ WARNING

ELECTRICAL SHOCK HAZARD

Failure to follow this warning could result in personal injury or death.

Do not use gas piping as an electrical ground. Unit cabinet must have an uninterrupted, unbroken electrical ground to minimize the possibility of personal injury if an electrical fault should occur. This ground may consist of electrical wire connected to unit ground lug in control compartment, or conduit approved for electrical ground when installed in accordance with NEC (National Electrical Code); ANSI/NFPA 70, latest edition (in Canada, Canadian Electrical Code CSA [Canadian Standards Association] C22.1), and local electrical codes.

NOTE: Field-supplied wiring shall conform with the limitations of minimum 63°F (33°C) rise.

Field Power Supply —

If equipped with optional Powered Convenience Outlet: The power source leads to the convenience outlet's transformer primary are not factory connected. Installer must connect these leads according to required operation of the convenience outlet. If an always-energized convenience outlet operation is desired, connect the source leads to the line side of the unit-mounted disconnect. (Check with local codes to ensure this method is acceptable in your area.) If a de-energize via unit disconnect switch operation of the convenience outlet is desired, connect the source leads to the load side of the unit disconnect. On a unit without a unit-mounted disconnect, connect the source leads to compressor contactor C and indoor fan contactor IFC pressure lugs with unit field power leads (see Fig. 24).

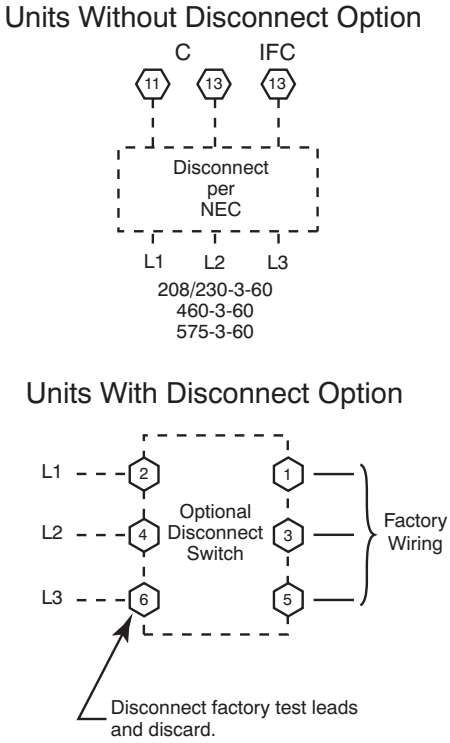

Fig. 24 - Power Wiring Connections

Field power wires are connected to the unit at line-side pressure lugs on compressor contactor C and indoor fan contactor IFC (see wiring diagram label for control box component arrangement) or at factory-installed option non-fused disconnect switch. Max wire size is #4 AWG (copper only).

NOTE: TEST LEADS - Unit may be equipped with short leads (pigtails) on the field line connection points on contactor C or optional disconnect switch. These leads are for factory run-test purposes only; remove and discard before connecting field power wires to unit connection points. Make field power connections directly to line connection pressure lugs only.

⚠ WARNING

FIRE HAZARD

Failure to follow this warning could result in intermittent operation or performance satisfaction.

Do not connect aluminum wire between disconnect switch and furnace. Use only copper wire. (See Fig. 25.)

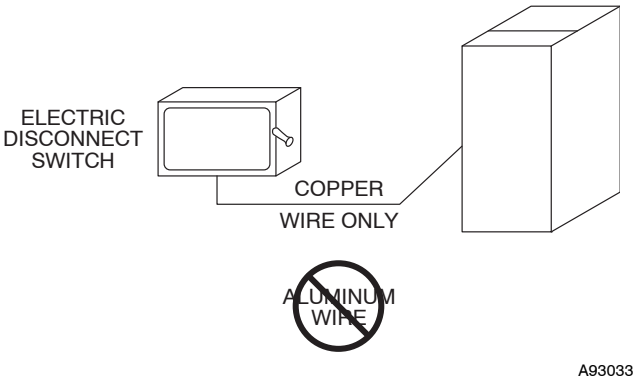

Fig. 25 - Disconnect Switch and Unit

Units with Factory-Installed Non-Fused Disconnect —

The factory-installed option non-fused disconnect (NFD) switch is located in a weatherproof enclosure located under the main control box. The manual switch handle and shaft are shipped in the disconnect enclosure. Assemble the shaft and handle to the switch at this point. Discard the factory test leads (see Fig. 24).

Connect field power supply conductors to LINE side terminals when the switch enclosure cover is removed to attach the handle.

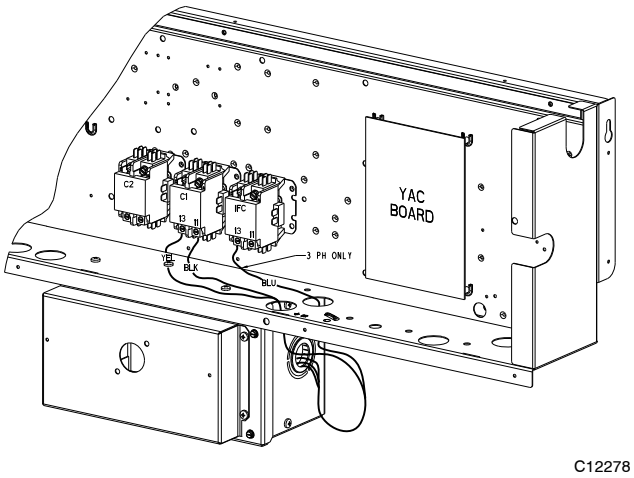

Fig. 26 - Location of Non-Fused Disconnect Enclosure

To field install the NFD shaft and handle:

1. Remove the unit front pane (see Figs. 2 and 3).
2. Remove (3) hex screws on the NFD enclosure - (2) on the face of the cover and (1) on the left side cover.
3. Remove the front cover of the NFD enclosure.
4. Make sure the NFD shipped from the factory is at OFF position (the arrow on the black handle knob is at OFF).

5. Insert the shaft with the cross pin on the top of the shaft in the horizontal position.
6. Measure from the tip of the shaft to the top surface of the black pointer; the measurement should be 3.75 - 3.88 in. (95 - 99 mm).
7. Tighten the locking screw to secure the shaft to the NFD.
8. Turn the handle to the OFF position with red arrow pointing at OFF.
9. Install the handle on to the painted cover horizontally with the red arrow pointing to the left.
10. Secure the handle to the painted cover with (2) screws and lock washers supplied.
11. Engaging the shaft into the handle socket, re-install (3) hex screws on the NFD enclosure.
12. Re-install the unit front panel.

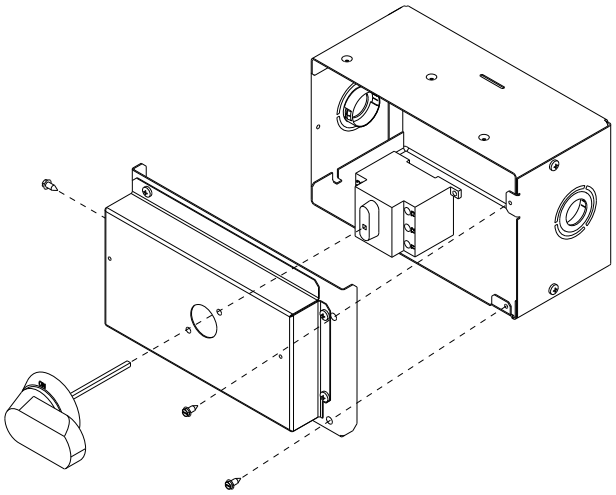

Fig. 27 - Handle and Shaft Assembly for NFD

Units Without Factory-Installed Non-Fused Disconnect —

When installing units, provide a disconnect switch per NEC (National Electrical Code) of adequate size. Disconnect sizing data is provided on the unit informative plate. Locate on unit cabinet or within sight of the unit per national or local codes. Do not cover unit informative plate if mounting the disconnect on the unit cabinet.

All Units —

All field wiring must comply with NEC and all local codes. Size wire based on MCA (Minimum Circuit Amps) on the unit informative plate. See Fig. 24 for power wiring connections to the unit power terminal block and equipment ground. Maximum wire size is #4 ga AWG per pole.

Provide a ground-fault and short-circuit over-current protection device (fuse or breaker) per NEC Article 440 (or local codes). Refer to unit informative data plate for MOCP (Maximum Over-current Protection) device size.

All units except 208/230-v units are factory wired for the voltage shown on the nameplate. *If the 208/230-v unit is to be connected to a 208-v power supply, the control transformer must be rewired by moving the black wire with the $^1/_4$-in. female spade connector from the 230-v connection and moving it to the 208-v $^1/_4$-in. male terminal on the primary side of the transformer.* Refer to unit label diagram for additional information.

Voltage to compressor terminals during operation must be within voltage range indicated on unit nameplate. See Tables 13 and 14. On 3-phase units, voltages between phases must be balanced within 2% and the current within 10%. Use the formula shown in the legend for Table Tables 13 and 14, Note 2 (on page 44) to determine the percent of voltage imbalance. Operation on improper line voltage or excessive phase imbalance constitutes abuse and may cause damage to electrical components. Such operation would invalidate any applicable Carrier warranty.

NOTE: Check all factory and field electrical connections for tightness.

Convenience Outlets —

⚠ WARNING

ELECTRICAL OPERATION HAZARD

Failure to follow this warning could result in personal injury or death.

Units with convenience outlet circuits may use multiple disconnects. Check convenience outlet for power status before opening unit for service. Locate its disconnect switch, if appropriate, and open it. Lock-out and tag-out this switch, if necessary.

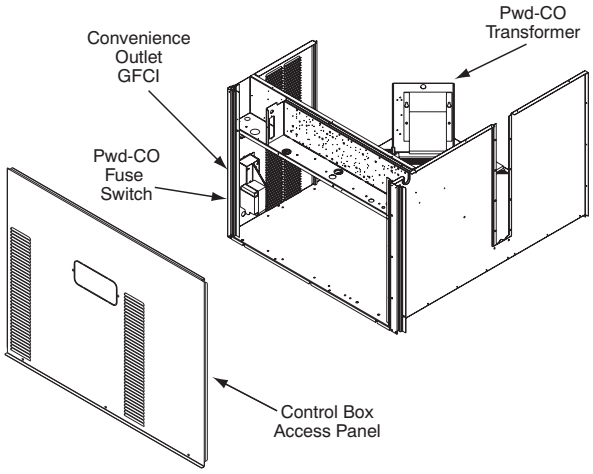

Fig. 28 - Convenience Outlet Location

Two types of convenience outlets are offered on 48TC models: Non-powered and unit-powered. Both types provide a 125-volt GFCI (ground-fault circuit-interrupter) duplex receptacle rated at 15-A behind a hinged waterproof access cover, located on the end panel of the unit. See Fig. 28.

Installing Weatherproof Cover: A weatherproof while-in-use cover for the factory-installed convenience outlets is now required by UL standards. This cover cannot be factory-mounted due its depth; it must be installed at unit installation. For shipment, the convenience outlet is covered with a blank cover plate.

The weatherproof cover kit is shipped in the unit's control box. The kit includes the hinged cover, a backing plate and gasket.

DISCONNECT ALL POWER TO UNIT AND CONVENIENCE OUTLET. LOCK-OUT AND TAG-OUT ALL POWER.

Remove the blank cover plate at the convenience outlet; discard the blank cover.

Loosen the two screws at the GFCI duplex outlet, until approximately $^1/_2$-in (13 mm) under screw heads are exposed. Press the gasket over the screw heads. Slip the backing plate over the screw heads at the keyhole slots and align with the gasket; tighten the two screws until snug (do not over-tighten).

Mount the weatherproof cover to the backing plate as shown in Fig. 29. Remove two slot fillers in the bottom of the cover to permit service tool cords to exit the cover. Check for full closing and latching.

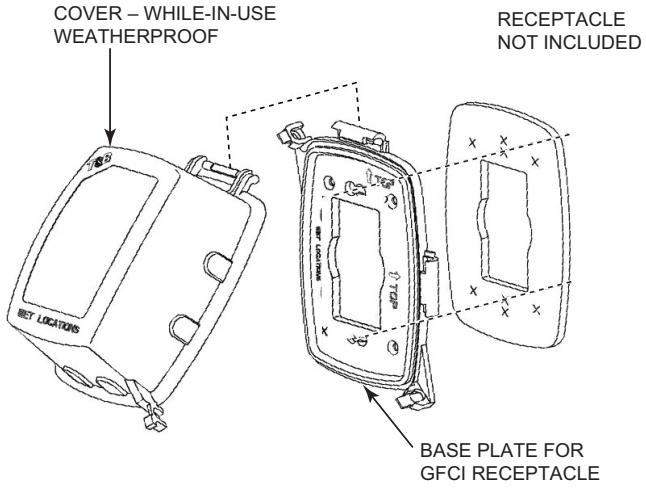

C09022

Fig. 29 - Weatherproof Cover Installation

Non-powered type: This type requires the field installation of a general-purpose 125-volt 15-A circuit powered from a source elsewhere in the building. Observe national and local codes when selecting wire size, fuse or breaker requirements and disconnect switch size and location. Route 125-v power supply conductors into the bottom of the utility box containing the duplex receptacle.

Unit-powered type: A unit-mounted transformer is factory-installed to stepdown the main power supply voltage to the unit to 115-v at the duplex receptacle. This option also includes a manual switch with fuse, located in a utility box and mounted on a bracket behind the convenience outlet; access is through the unit's control box access panel. See Fig. 28.

The primary leads to the convenience outlet transformer are not factory-connected. Selection of primary power source is a customer-option. If local codes permit, the transformer primary leads can be connected at the line-side terminals on the unit-mounted non-fused disconnect or HACR breaker switch; this will provide service power to the unit when the unit disconnect switch or HACR switch is open. Other connection methods will result in the convenience outlet circuit being de-energized when the unit disconnect or HACR switch is open. See Fig. 30.

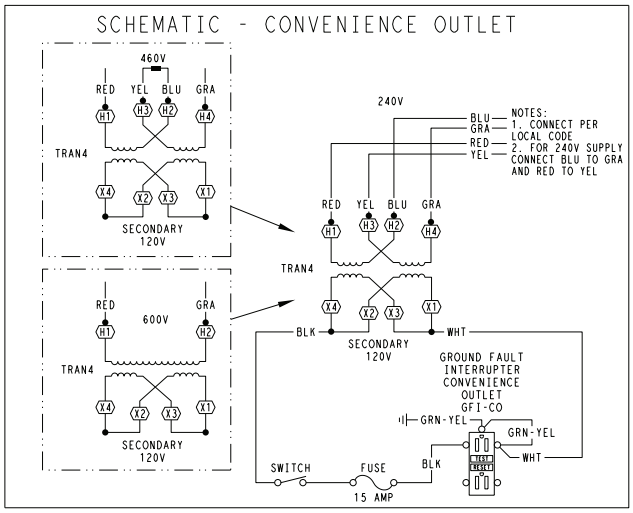

C08283

UNIT VOLTAGE	CONNECT AS	PRIMARY CONNECTIONS	TRANSFORMER TERMINALS
208, 230	240	L1: RED +YEL L2: BLU + GRA	H1 + H3 H2 + H4
460	480	L1: RED Splice BLU + YEL L2: GRA	H1 H2 + H3 H4
575	600	L1: RED L2: GRA	H1 H2

Fig. 30 - Powered Convenience Outlet Wiring

Test the GFCI receptacle by pressing the TEST button on the face of the receptacle to trip and open the receptacle. Check for proper grounding wires and power line phasing if the GFCI receptacle does not trip as required. Press the RESET button to clear the tripped condition.

Fuse on power type: The factory fuse is a Bussman "Fusetron" T-15, non-renewable screw-in (Edison base) type plug fuse.

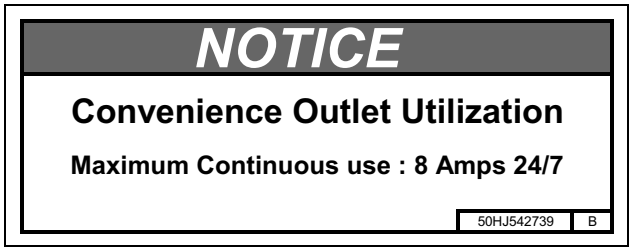

C13415

Fig. 31 - Convenience Outlet Utilization Notice Label

Using unit-mounted convenience outlets: Units with unit-mounted convenience outlet circuits will often require that two disconnects be opened to de-energize all power to the unit. Treat all units as electrically energized until the convenience outlet power is also checked and de-energization is confirmed. Observe National Electrical Code Article 210, Branch Circuits, for use of convenience outlets.

Factory-Option Thru-Base Connections (Electrical Connections) —

This service connection kit consists of a $^1/_2$-in electrical bulkhead connector and a $1^1/_4$-in electrical bulkhead connector, all factory-installed in the embossed (raised) section of the unit basepan in the condenser section. The $^1/_2$-in bulkhead connector enables the low-voltage control wires to pass through the basepan. The $1^1/_4$-in electrical bulkhead connector allows the high-voltage power wires to pass through the basepan. See Fig. 16.

Check tightness of connector lock nuts before connecting electrical conduits.

Field-supplied and field-installed liquidtight conduit connectors and conduit may be attached to the connectors on the basepan. Pull correctly rated high voltage and low voltage through appropriate conduits. Connect the power conduit to the internal disconnect (if unit is so equipped) or to the external disconnect (through unit side panel). A hole must be field cut in the main control box bottom on the left side so the 24-v control connections can be made. Connect the control power conduit to the unit control box at this hole.

Units without Thru-Base Connections —

1. Install power wiring conduit through side panel openings. Install conduit between disconnect and control box.
2. Install power lines to terminal connections as shown in Fig. 24.

Field Control Wiring —

The 48TC unit requires an external temperature control device. This device can be a thermostat (field-supplied) or a PremierLink controller (available as factory-installed option or as field-installed accessory, for use on a Carrier Comfort Network or as a stand alone control) or the RTU Open Controller for Building Management Systems using non-CCN protocols (RTU Open is available as a factory-installed option only).

Thermostat —

Install a Carrier-approved accessory 2-stage thermostat according to installation instructions included with the accessory. Locate the thermostat accessory on a solid wall in the conditioned space to sense average temperature in accordance with the thermostat installation instructions.

If the thermostat contains a logic circuit requiring 24-v power, use a thermostat cable or equivalent single leads of different colors with minimum of seven leads. If the thermostat does not require a 24-v source (no "C" connection required), use a thermostat cable or equivalent with minimum of six leads. Check the thermostat installation instructions for additional features which might require additional conductors in the cable.

For wire runs up to 50 ft. (15 m), use no. 18 AWG (American Wire Gage) insulated wire (35°C minimum). For 50 to 75 ft. (15 to 23 m), use no. 16 AWG insulated wire (35°C minimum). For over 75 ft. (23 m), use no. 14 AWG insulated wire (35°C minimum). All wire sizes larger than no. 18 AWG cannot be directly connected to the thermostat and will require a junction box and splice at the thermostat.

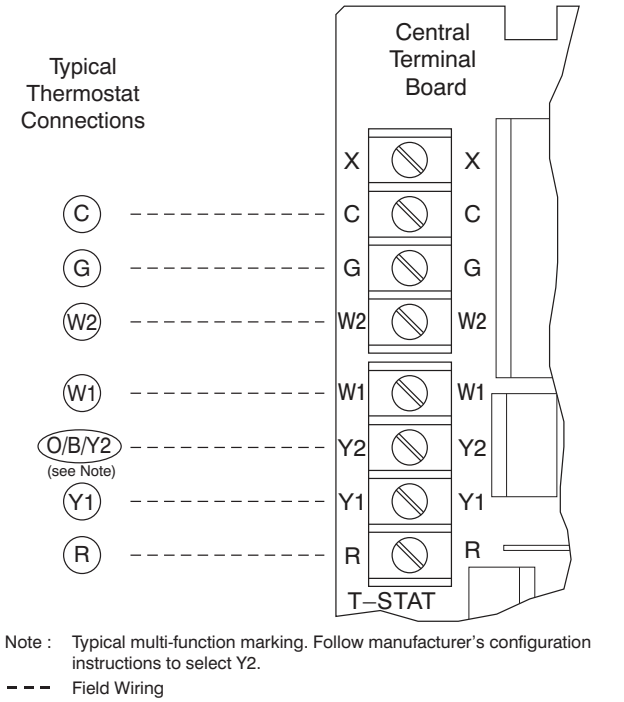

Fig. 32 - Typical Low-Voltage Control Connections

Unit without Thru-Base Connection Kit —

Pass the thermostat control wires through the hole provided in the end panel (see item "D" in the view labeled "LEFT" in Fig. 2 or Fig. 3); then feed the wires through the raceway built into the corner post to the control box. Pull the wires over to the terminal strip on the upper-left corner of the Central Terminal Board (CTB). See Fig. 33.

NOTE: If thru-the-bottom connections accessory is used, refer to the accessory installation instructions for information on routing power and control wiring.

Heat Anticipator Settings —

Set heat anticipator settings at 0.14 amp for the first stage and 0.14 amp for second-stage heating, when available.

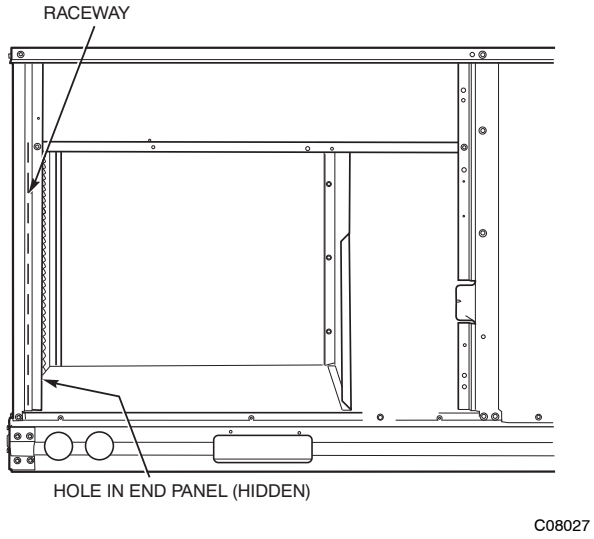

Fig. 33 - Field Control Wiring Raceway

Humidi-MiZer® Control Connections

Humidi-MiZer – Space RH Controller —

NOTE: The Humidi-MiZer is a factory installed option which is only available for Two-Stage cooling units equipped with Al/Cu condenser coils.

The Humidi-MiZer dehumidification system requires a field-supplied and -installed space relative humidity control device. This device may be a separate humidistat control (contact closes on rise in space RH above control setpoint) or a combination thermostat-humidistat control device such as Carrier's EDGE® Pro Thermidistat with isolated contact set for dehumidification control. The humidistat is normally used in applications where a temperature control is already provided (units with PremierLink™ control).

To connect the Carrier humidistat (HL38MG029):

1. Route the humidistat 2-conductor cable (field-supplied) through the hole provided in the unit corner post.
2. Feed wires through the raceway built into the corner post (see Fig. 33) to the 24-v barrier located on the left side of the control box. The raceway provides the UL-required clearance between high-voltage and low-voltage wiring.
3. Use wire nuts to connect humidistat cable to two PINK leads in the low–voltage wiring as shown in Fig. 36.

To connect the Thermidistat device (33CS2PPRH-01):

1. Route the Thermidistat multi-conductor thermostat cable (field-supplied) through the hole provided in the unit corner post.
2. Feed wires through the raceway built into the corner post (see Fig. 33) to the 24-v barrier located on the left side of the control box. The raceway provides the UL-required clearance between high-voltage and low-voltage wiring.
3. The Thermidistat has dry contacts at terminals D1 and D2 for dehumidification operation (see Fig. 37). The dry contacts must be wired between CTB terminal R and the PINK lead to the LTLO switch with field-supplied wire nuts. Refer to the installation instructions included with the Carrier Edge Thermidistat device (Form 33CS-65SI or latest) for more information.

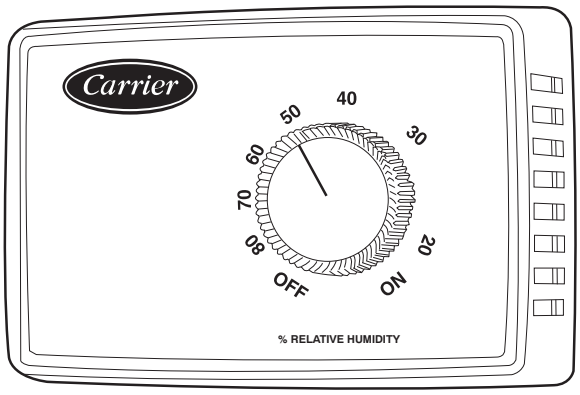

C09295

Fig. 34 - Accessory Field-Installed Humidistat

C09296

Fig. 35 - EDGE Pro Thermidistat

EconoMi$er X (Factory-Installed Option) —

For details on operating 48TC units equipped with the factory-installed EconoMi$er X option, refer to *Factory-Installed Economizers for TC/TCQ/HC/HCQ/LC/KC/KCQ Rooftop Units, 3 to 27.5 Nominal Tons. Economizer Supplement Related to California Title 24* (Catalog No. SUP-TI24-02SI, or later).

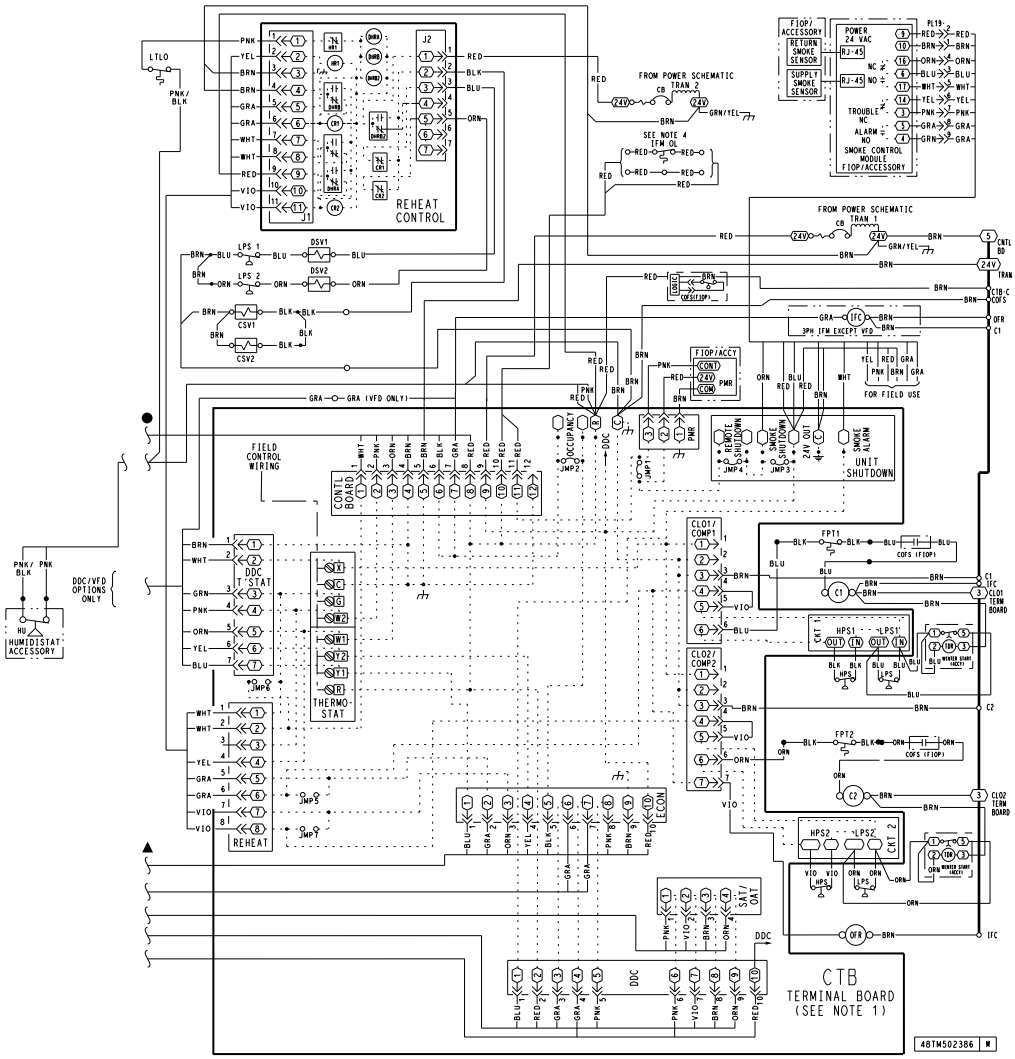

C150002

Fig. 36 - Typical Humidi-MiZer Adaptive Dehumidification System Humidistat Wiring

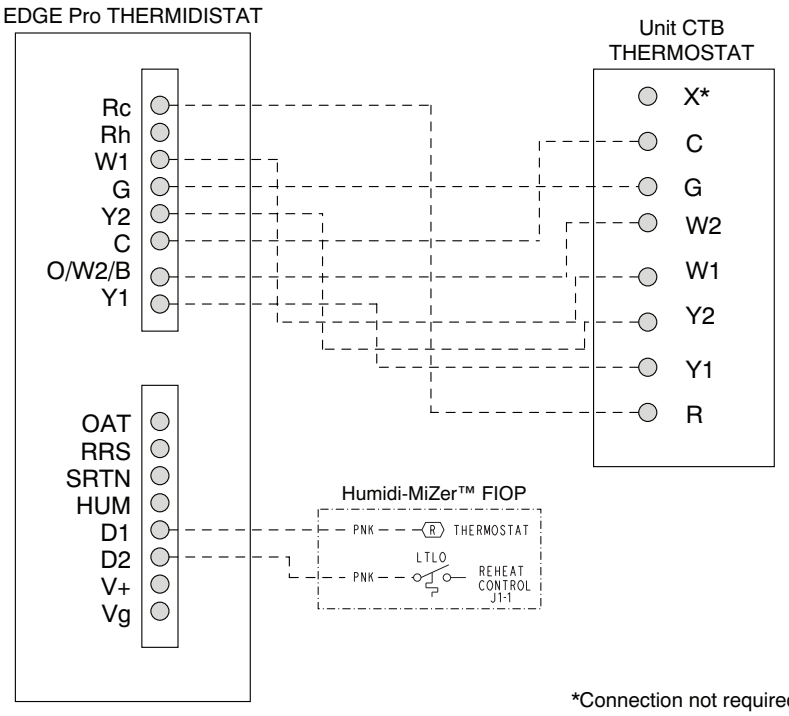

C09298

Fig. 37 - Typical Rooftop Unit with Humidi-MiZer Adaptive Dehumidification System with EDGE Pro Thermidistat Device

PremierLink™ (Factory-Option)

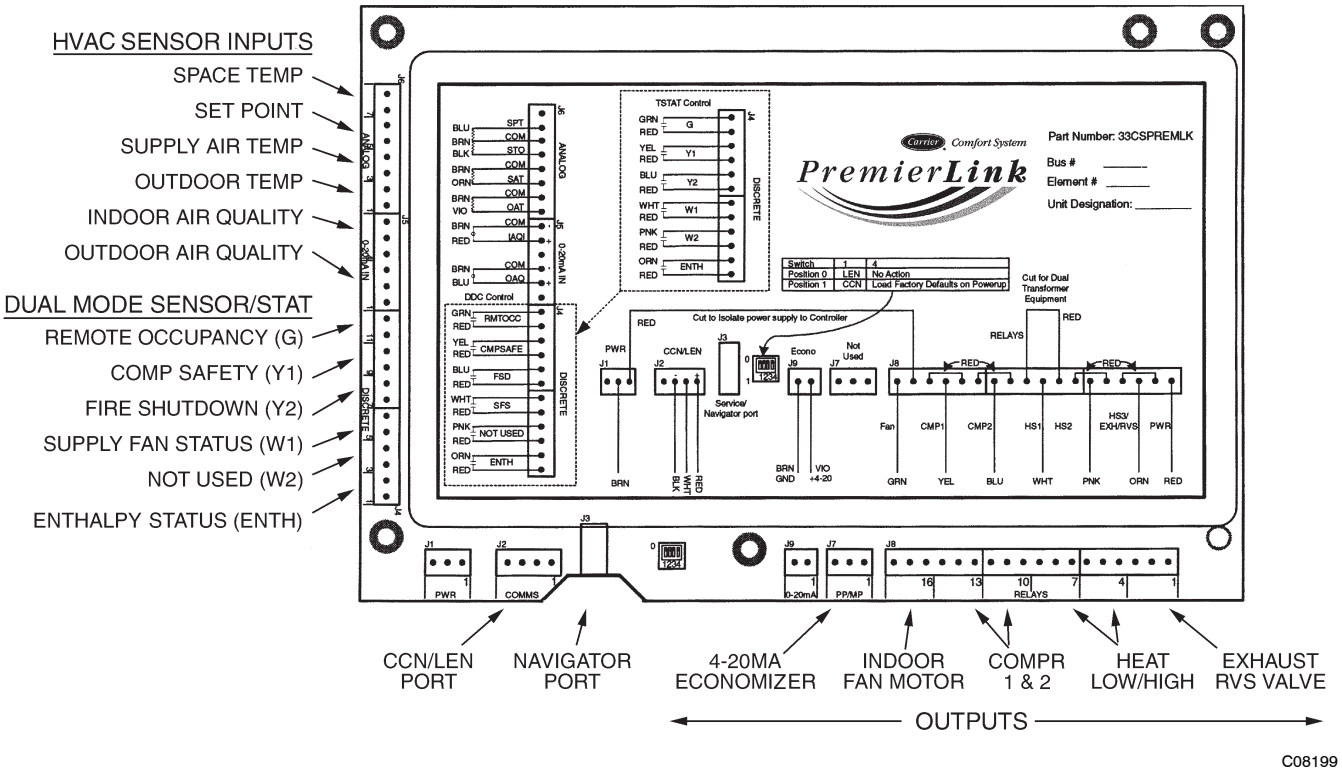

Fig. 38 - PremierLink Controller

The PremierLink controller (see Fig. 38) is compatible with Carrier Comfort Network® (CCN) devices. This control is designed to allow users the access and ability to change factory-defined settings, thus expanding the function of the standard unit control board. CCN service access tools include System Pilot (TM), Touch Pilot (TM) and Service Tool. (Standard tier display tools Navigator™ and Scrolling Marquee are not suitable for use with latest PremierLink controller (Version 2.x).)

The PremierLink control is factory-mounted in the 48TC unit's main control box to the left of the Central Terminal Board (CTB). Factory wiring is completed through harnesses connected to the CTB thermostat. Field connections are made at a 16-pole terminal block (TB1) located on the bottom shelf of the unit control box in front of the PremierLink controller. The factory-installed PremierLink control includes the supply-air temperature (SAT) sensor. The outdoor air temperature (OAT) sensor is included in the FIOP/accessory EconoMi$er™2 package.

The PremierLink controller requires the use of a Carrier electronic thermostat or a CCN connection for time broadcast to initiate its internal timeclock. This is necessary for broadcast of time of day functions (occupied/unoccupied).

NOTE: PremierLink controller is shipped in Sensor mode. To be used with a thermostat, the PremierLink controller must be configured to Thermostat mode. Refer to PremierLink Configuration instructions for Operating Mode.

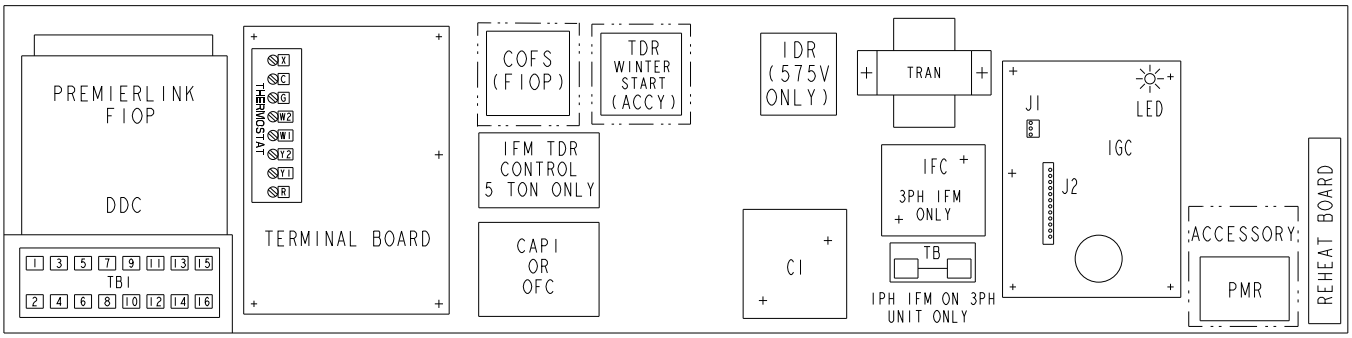

Fig. 39 - 48TC Control Box Component Locations

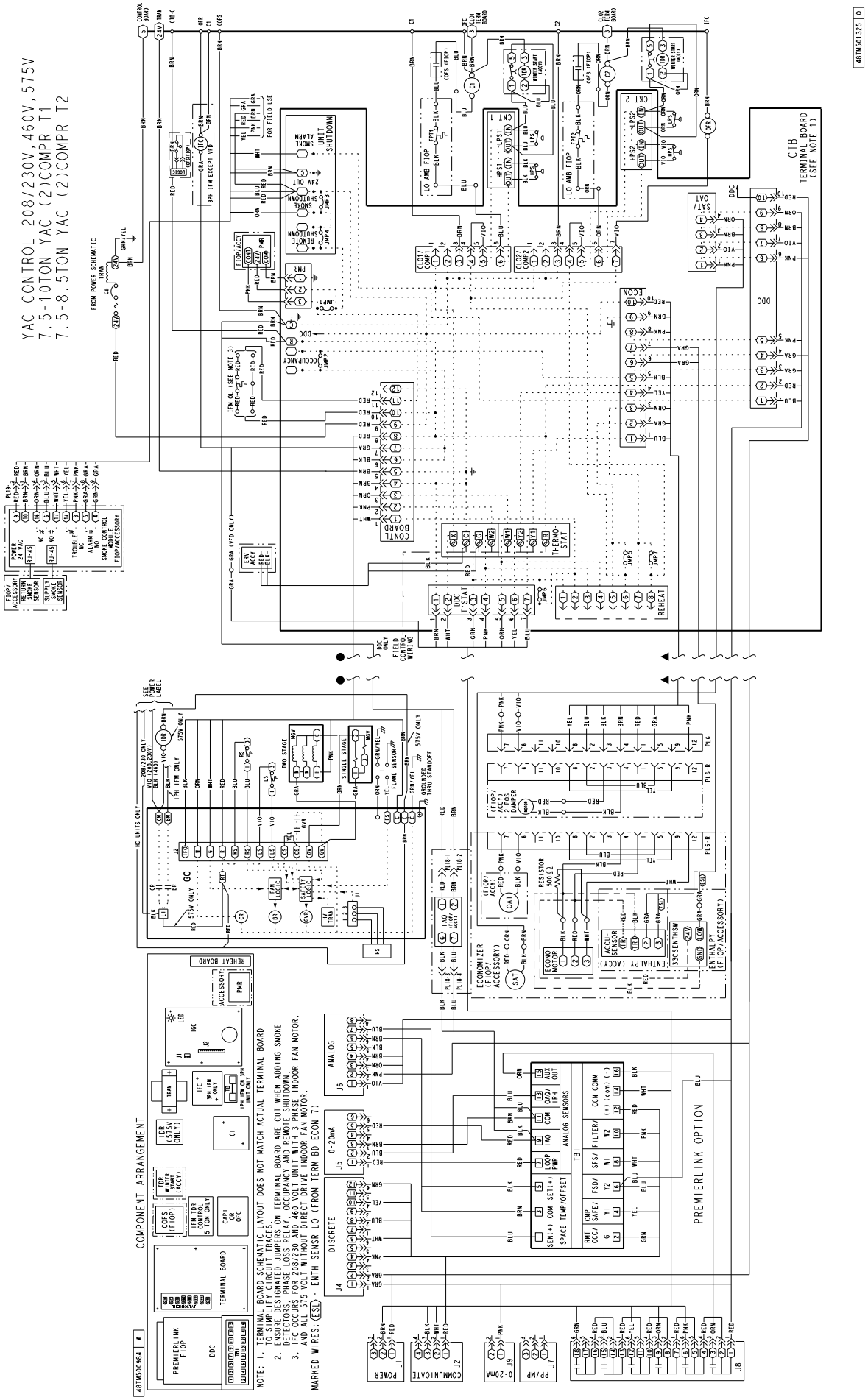

C150003

Fig. 40 - PremierLink Wiring Schematic

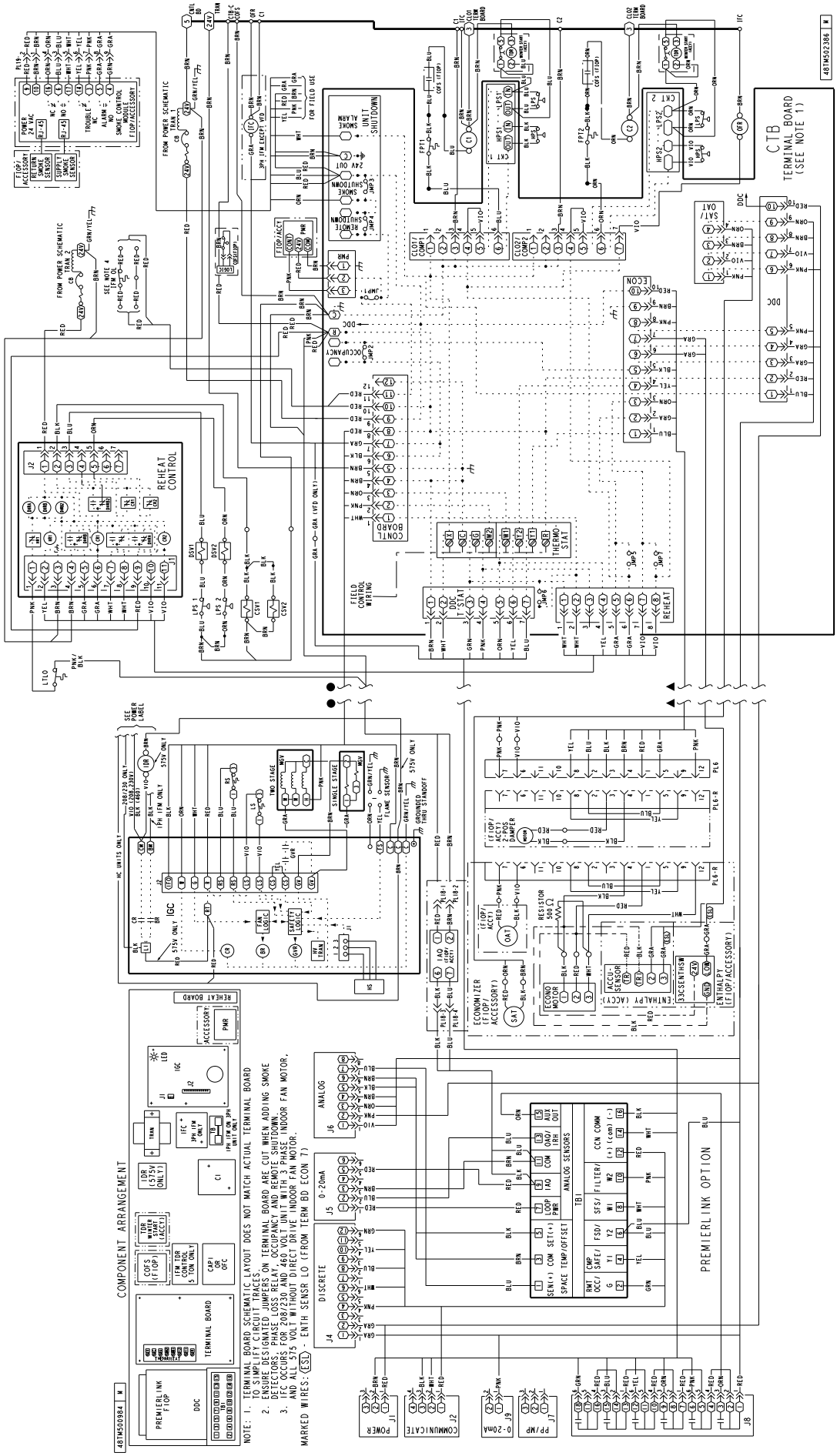

C150004

Fig. 41 - PremierLink Wiring Schematic with Humidi-MiZer®

Supply Air Temperature (SAT) Sensor —

On FIOP-equipped 48TC unit, the unit is supplied with a supply-air temperature (SAT) sensor (33ZCSENSAT). This sensor is a tubular probe type, approx 6-inches (152 mm) in length. It is a nominal 10-k ohm thermistor.

The SAT is factory-wired. The SAT probe is wire-tied to the supply-air opening (on the horizontal opening end) in its shipping position. Remove the sensor for installation. Re-position the sensor in the flange of the supply-air opening or in the supply air duct (as required by local codes). Drill or punch a 1/2-in. hole in the flange or duct. Use two field-supplied, self-drilling screws to secure the sensor probe in a horizontal orientation. See Fig. 42.

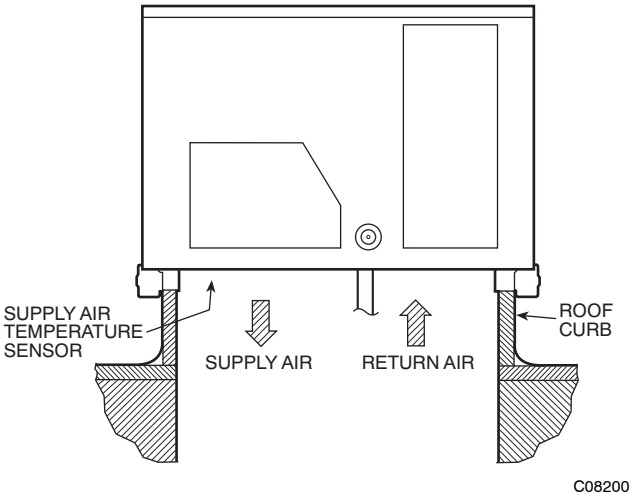

Fig. 42 - Typical Mounting Location for Supply Air Temperature (SAT) Sensor on Small Rooftop Units

NOTE: Refer to Form 33CS-68SI for complete PremierLink configuration, operating sequences and troubleshooting information. Have a copy of this manual available at unit start-up.

NOTE: The sensor must be mounted in the discharge airstream downstream of the cooling coil and any heating devices. Be sure the probe tip does not come in contact with any of the unit's heater surfaces.

Outdoor Air Temperature (OAT) Sensor —

The OAT is factory-mounted in the EconoMi$er2 (FIOP or accessory). It is a nominal 10k ohm thermistor attached to an eyelet mounting ring.

EconoMi$er2 —

The PremierLink control is used with EconoMi$er2 (option or accessory) for outdoor air management. The damper position is controlled directly by the PremierLink control; EconoMi$er2 has no internal logic device.

Outdoor air management functions can be enhanced with field-installation of these accessory control devices:

Enthalpy control (outdoor air or differential sensors)
Space CO_2 sensor
Outdoor air CO_2 sensor

Refer to Table 6 for accessory part numbers.

Field Connections

Field connections for accessory sensor and input devices are made at the 16-pole terminal block (TB1) located on the control box bottom shelf in front of the PremierLink control (See Fig. 40 and Fig. 41). Some input devices also require a 24-vac signal source; connect at CTB terminal R at "THERMOSTAT" connection strip for this signal source. See connections figures on following pages for field connection locations (and for continued connections at the PremierLink board inputs).

Table 7 provides a summary of field connections for units equipped with Space Sensor. Table 8 provides a summary of field connections for units equipped with Space Thermostat.

Table 6 – PremierLink Sensor Usage

APPLICATION	OUTDOOR AIR TEMPERATURE SENSOR	RETURN AIR TEMPERATURE SENSOR	OUTDOOR AIR ENTHALPY SENSOR	RETURN AIR ENTHALPY SENSOR
Differential Dry Bulb Temperature with PremierLink (PremierLink requires 4–20 mA Actuator)	Included – CRTEMPSN001A00	Required – 33ZCT55SPT or equivalent	–	–
Single Enthalpy with PremierLink (PremierLink requires 4–20mA Actuator)	Included – Not Used	–	Requires – 33CSENTHSW	–
Differential Enthalpy with PremierLink (PremierLink requires 4–20mA Actuator)	Included – Not Used	–	Requires – 33CSENTHSW	Requires – 33CSENTSEN

NOTES:
CO_2 Sensors (Optional):
33ZCSENCO2 – Room sensor (adjustable). Aspirator box is required for duct mounting of the sensor.
33ZCASPCO2 – Aspirator box used for duct–mounted CO_2 room sensor.
33ZCT55CO2 – Space temperature and CO_2 room sensor with override.
33ZCT56CO2 – Space temperature and CO_2 room sensor with override and setpoint.

Table 7 – Space Sensor Mode

TB1 TERMINAL	FIELD CONNECTION	INPUT SIGNAL
1	T55–SEN/T56–SEN	Analog (10k thermistor)
2	RMTOCC	Discrete, 24VAC
3	T55–SEN/T56–SEN	Analog (10k thermistor)
4	CMPSAFE	Discrete, 24VAC
5	T56–SET	Analog (10k thermistor)
6	FSD	Discrete, 24VAC
7	LOOP–PWR	Analog, 24VDC
8	SPS	Discrete, 24VAC
9	IAQ–SEN	Analog, 4–20mA
10	FILTER	Discrete, 24VAC
11	IAQ–COM/OAQ–COM/RH–COM	Analog, 4–20mA
12	CCN + (RED)	Digital, , 5VDC
13	OAQ–SEN/RH–SEN	Analog, 4–20mA
14	CCN Gnd (WHT)	Digital, 5VDC
15	AUX OUT(Power Exhaust)	(Output)Discrete 24VAC
16	CCN – (BLK)	Digital, 5VDC

LEGEND:

T55 – Space Temperature Sensor
T56 – Space Temperature Sensor
CCN – Carrier Comfort Network (communication bus)
CMPSAFE – Compressor Safety
FILTER – Dirty Filter Switch
FSD – Fire Shutdown
IAQ – Indoor Air Quality (CO_2)
OAQ – Outdoor Air Quality (CO_2)
RH – Relative Humidity
SFS – Supply Fan Status

Table 8 – Thermostat Mode

TB1 TERMINAL	FIELD CONNECTION	INPUT SIGNAL
1	RAT SEN	Analog (10k thermistor)
2	G	Discrete, 24VAC
3	RAT SEN	Analog (10k thermistor)
4	Y1	Discrete, 24VAC
5		
6	Y2	Discrete, 24VAC
7	LOOP–PWR	Analog, 24VDC
8	W1	Discrete, 24VAC
9	IAQ–SEN	Analog, 4–20mA
10	W2	Discrete, 24VAC
11	IAQ–COM/OAQ–COM/RH–COM	Analog, 4–20mA
12	CCN + (RED)	Digital, 5VDC
13	OAQ–SEN/RH–SEN	Analog, 4–20mA
14	CCN Gnd (WHT)	Digital, 5VDC
15	AUX OUT (Power Exhaust)	(Output) Discrete 24VAC
16	CCN – (BLK)	Digital, 5VDC

LEGEND:

CCN – Carrier Comfort Network (communication bus)
G – Thermostat Fan
IAQ – Indoor Air Quality (CO_2)
OAQ – Outdoor Air Quality (CO_2)
RAT – Return Air Temperature
RH – Relative Humidity
W1 – Thermostat Heat Stage 1
W2 – Thermostat Heat Stage 2
Y1 – Thermostat Cool Stage 1
Y2 – Thermostat Cool Stage 2

Space Sensors —

The PremierLink controller is factory-shipped configured for Space Sensor Mode. A Carrier T-55 or T-56 space sensor must be used. T-55 space temperature sensor provides a signal of space temperature to the PremierLink control. T-56 provides same space temperature signal plus it allows for adjustment of space temperature setpoints from the face of the sensor by the occupants.

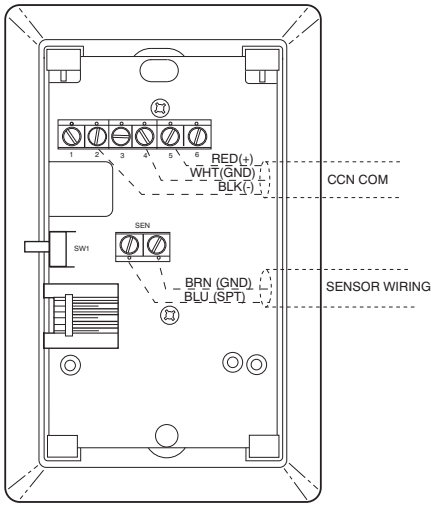

C08201

Fig. 43 - T-55 Space Temperature Sensor Wiring

Connect T-55: See Fig. 43 for typical T-55 internal connections. Connect the T-55 SEN terminals to TB1 terminals 1 and 3 (see Fig. 44).

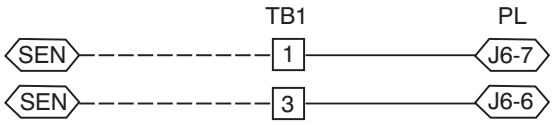

C08212

Fig. 44 - PremierLink T-55 Sensor

Connect T-56: See Fig. 45 for T-56 internal connections. Install a jumper between SEN and SET terminals as illustrated. Connect T-56 terminals to TB1 terminals 1, 3 and 5 (see Fig. 46).

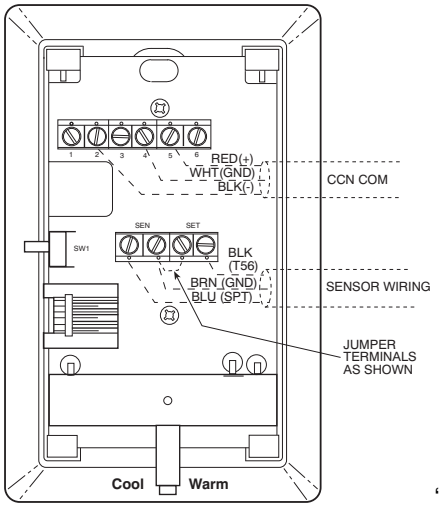

C08202

Fig. 45 - T-56 Internal Connections

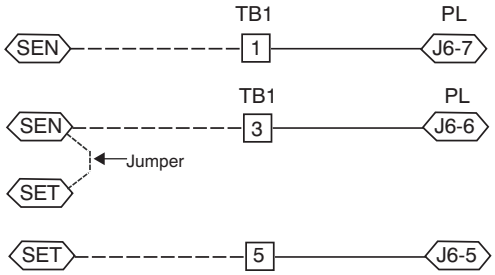

C08213

Fig. 46 - PremierLink T-56 Sensor

Connect Thermostat —

A 7-wire thermostat connection requires a 24-v power source and a common connection. Use the R and C terminals on the CTB's THERMOSTAT connection strip for these. Connect the thermostat's Y1, Y2, W1, W2 and G terminals to PremierLink TB1 as shown in Fig. 47.

If the 48TC unit is equipped with factory-installed smoke detector(s), disconnect the factory BLU lead at TB1-6 (Y2) before connecting the thermostat. Identify the BLU lead originating at CTB-DDC-1; disconnect at TB1-6 and tape off. Confirm that the second BLU lead at TB1-6 remains connected to PremierLink J4-8.

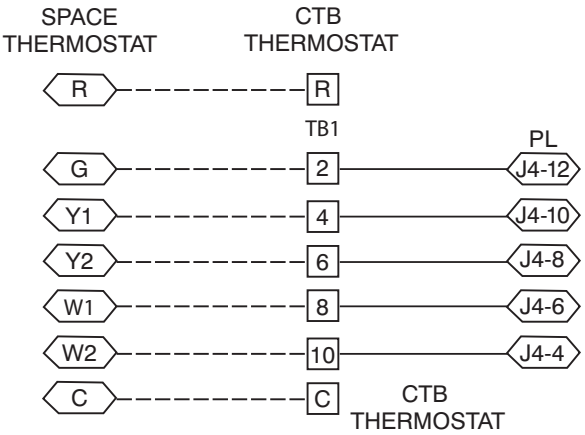

C08119

Fig. 47 - Space Thermostat Connections

If the 48TC unit has an economizer system and free-cooling operation is required, a sensor representing Return Air Temperature must also be connected (field-supplied and installed). This sensor may be a T-55 Space Sensor (see Fig. 43) installed in the space or in the return duct, or it may be sensor PNO 33ZCSENSAT, installed in the return duct. Connect this sensor to TB1-1 and TB1-3 per Fig. 44.

Configure the Unit for Thermostat Mode —

Connect to the CCN bus using a CCN service tool and navigate to PremierLink Configuration screen for Operating Mode. Default setting is Sensor Mode (value 1). Change the value to 0 to reconfigure the controller for Thermostat Mode.

When the PremierLink is configured for Thermostat Mode, these functions are not available: Fire Shutdown (FSD), Remote Occupied (RMTOCC), Compressor Safety (CMPSAFE), Supply Fan Status (SFS), and Filter Pressure Switch (FILTER).

Economizer Controls

Indoor Air Quality (CO_2) Sensor —

The indoor air quality sensor accessory monitors space carbon dioxide (CO_2) levels. This information is used to monitor IAQ levels. Several types of sensors are available, for wall mounting in the space or in return duct, with and without LCD display, and in combination with space temperature sensors. Sensors use infrared technology to measure the levels of CO_2 present in the space air.

The CO_2 sensors are all factory set for a range of 0 to 2000 ppm and a linear mA output of 4 to 20. Refer to the instructions supplied with the CO_2 sensor for electrical requirements and terminal locations. See Fig. 48 for typical CO_2 sensor wiring schematic.

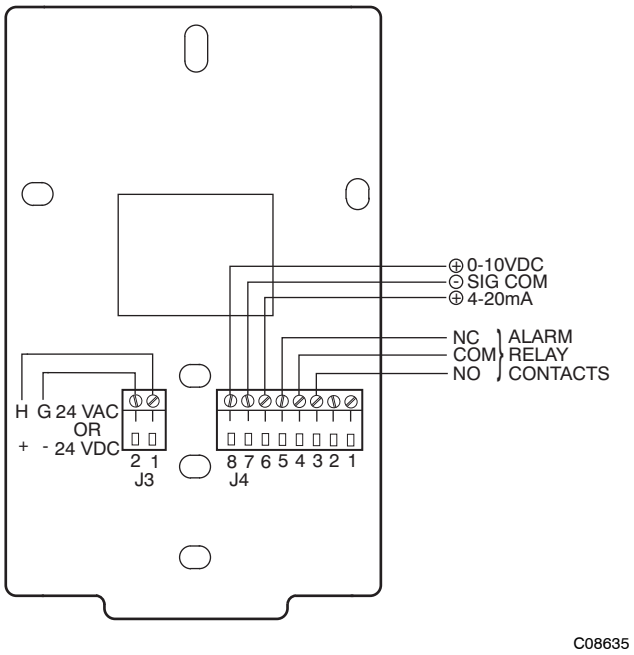

Fig. 48 - Indoor/Outdoor Air Quality (CO_2) Sensor (33ZCSENCO2) - Typical Wiring Diagram

To accurately monitor the quality of the air in the conditioned air space, locate the sensor near a return-air grille (if present) so it senses the concentration of CO_2 leaving the space. The sensor should be mounted in a location to avoid direct breath contact.

Do not mount the IAQ sensor in drafty areas such as near supply ducts, open windows, fans, or over heat sources. Allow at least 3 ft (0.9 m) between the sensor and any corner. Avoid mounting the sensor where it is influenced by the supply air; the sensor gives inaccurate readings if the supply air is blown directly onto the sensor or if the supply air does not have a chance to mix with the room air before it is drawn into the return airstream.

Wiring the Indoor Air Quality Sensor: For each sensor, use two 2-conductor 18 AWG (American Wire Gage) twisted-pair cables (unshielded) to connect the separate isolated 24 vac power source to the sensor and to connect the sensor to the control board terminals.

To connect the sensor to the control, identify the positive (4 to 20 mA) and ground (SIG COM) terminals on the sensor. See Fig. 48. Connect the 4-20 mA terminal to terminal TB1-9 and connect the SIG COM terminal to terminal TB1-11. See Fig. 49.

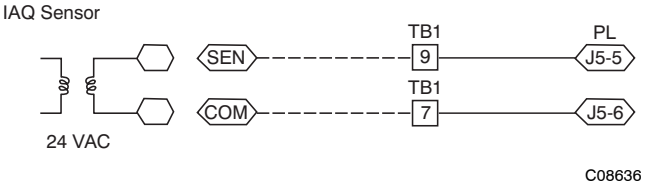

Fig. 49 - Indoor CO_2 Sensor (33ZCSENCO2) Connections

Refer to Form 33CS-68SI, PremierLink Installation, Start-up, and Configuration Instructions, for detailed configuration information

Outdoor Air Quality Sensor (PNO 33ZCSENCO2 plus weatherproof enclosure) —

The outdoor air CO_2 sensor is designed to monitor carbon dioxide (CO_2) levels in the outside ventilation air and interface with the ventilation damper in an HVAC system. The OAQ sensor is packaged with an outdoor cover. See Fig. 50. The outdoor air CO_2 sensor must be located in the economizer outside air hood.

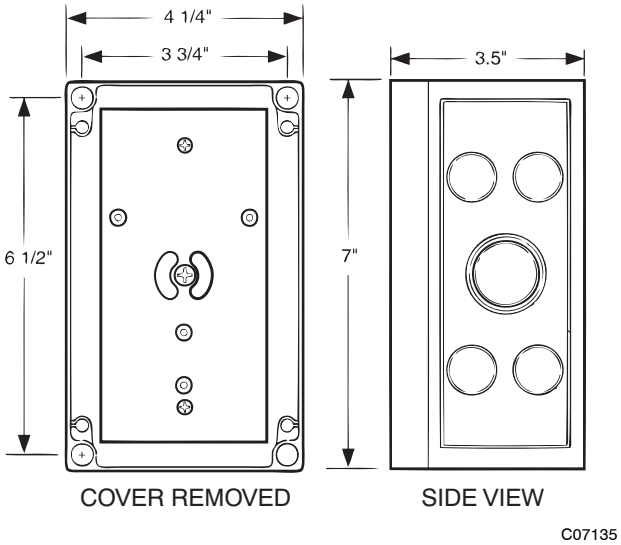

Fig. 50 - Outdoor Air Quality Sensor Cover

Wiring the Outdoor Air CO_2 Sensor: A dedicated power supply is required for this sensor. A two-wire cable is required to wire the dedicated power supply for the sensor. The two wires should be connected to the power supply and terminals 1 and 2.

To connect the sensor to the control, identify the positive (4 to 20 mA) and ground (SIG COM) terminals on the OAQ sensor. See Fig. 48. Connect the 4 to 20 mA terminal to the TB1-13 terminal of the 48TC. Connect the SIG COM terminal to the TB1-11 terminal of the 48TC. See Fig. 51.

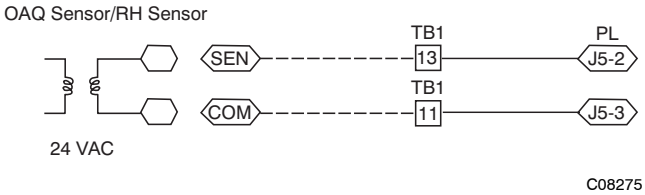

Fig. 51 - Outdoor CO_2 Sensor Connections

Space Relative Humidity Sensor or Humidistat Connections —

Space Relative Humidity Sensor connections: The accessory space relative humidity sensor (33ZCSENSRH-02) is installed on an interior wall to measure the relative humidity of the air within the occupied space.

The use of a standard 2 X 4 inch electrical box to accommodate the wiring is recommended for installation. The sensor can be mounted directly on the wall, if acceptable by local codes.

⚠ CAUTION

UNIT DAMAGE HAZARD

Failure to follow this caution may result in permanent damage to the sensor.

DO NOT clean or touch the sensing element with chemical solvents as they can permanently damage the sensor.

⚠ CAUTION

UNIT PERFORMANCE HAZARD

Failure to follow this caution will result in inaccurate sensor readings.

DO NOT mount the sensor in drafty areas such as near heating or air-conditioning ducts, open windows, fans, or over heat sources such as baseboard heaters, radiators, or wall-mounted dimmers. Sensors mounted in those areas will produce inaccurate readings.

If the sensor is installed directly on a wall service, install the humidity sensor using 2 screws and 2 hollow wall anchors (field supplied). Do not over tighten screws. See Fig. 52.

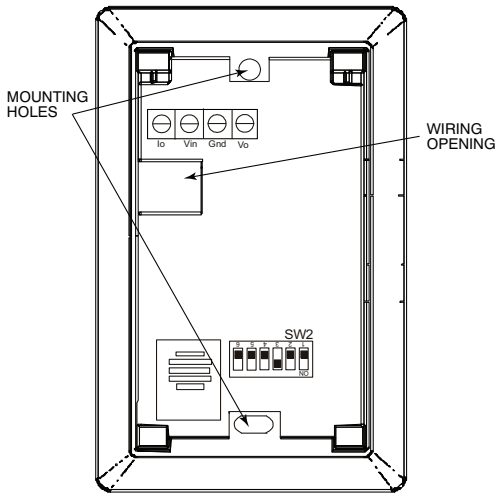

Fig. 52 - Space Relative Humidity Sensor Installation

The sensor must be mounted vertically on the wall. The Carrier logo should be orientated correctly when the sensor is properly mounted.

Avoid corner locations. Allow at least 4 ft between the sensor and any corner. Airflow near corners tends to be reduced, resulting in erratic sensor readings. The sensor should be vertically mounted approximately 5 ft up from the floor, beside the space temperature sensor.

For wiring distances up to 500 feet, use a 3-conductor, 18 or 20 AWG cable. ACCN communication cable can be used, although the shield is not required. The shield must be removed from the sensor end of the cable if this cable is used. See Fig. 53 for wiring details.

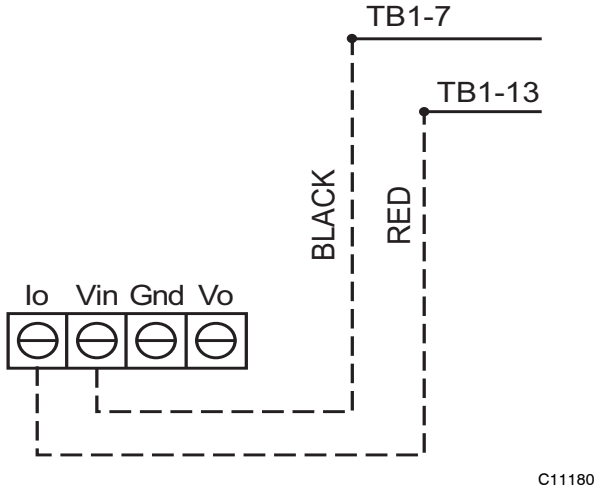

Fig. 53 - Space Relative Humidity Sensor Connection

The power for the sensor is provided by the PremierLink control on terminal J5-4 (+33 to +35vdc).

To wire the sensor:

1. At the sensor, remove 4 inches fo the jacket from the cable. Strip ¼ inch of insulation from each conductor. Route the cable through the wire clearance opening in the center of the sensor. See Fig. 52.
2. Connect a field-supplied BLACK wire to the sensor screw terminal marked Vin.
3. Connect a field-supplied RED wire into the sensor screw terminal marked Io.
4. Connect the field-supplied RED wire from the sensor to TB1-13.
5. Connect the field-supplied BLACK wire from the sensor to TB1-7.

Smoke Detector/Fire Shutdown (FSD) —

This function is available only when PremierLink is configured for (Space) Sensor Mode. The unit is factory-wired for PremierLink FSD operation when PremierLink is factory-installed.

On 48TC units equipped with factory-installed Smoke Detector(s), the smoke detector controller implements the unit shutdown through its NC contact set connected to the unit's CTB input. The FSD function is initiated via the smoke detector's Alarm NO contact set. The PremierLink communicates the smoke detector's tripped status to the CCN building control. See Fig. 40 and Fig. 41, the PremierLink wiring schematics.

Filter Status Switch —

This function is available only when PremierLink is configured for (Space) Sensor Mode.

PremierLink control can monitor return filter status in two ways: By monitoring a field-supplied/installed filter pressure switch or via supply fan runtime hours.

Using switch input: Install the dirty filter pressure switch according to switch manufacturer's instructions, to measure pressure drop across the unit's return filters. Connect one side of the switch's NO contact set to CTB's THERMOSTAT-R terminal. Connect the other side of the NO contact set to TB1-10. Setpoint for Dirty Filter is set at the switch. See Fig. 54.

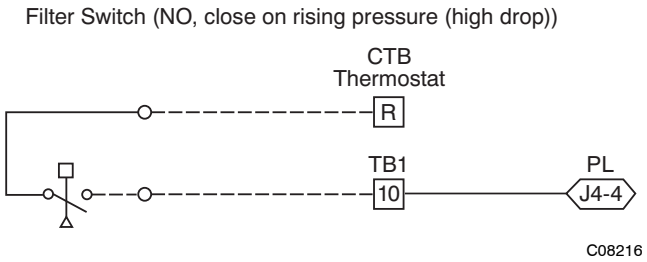

Fig. 54 - PremierLink Filter Switch Connection

When the filter switch's NO contact set closes as filter pressure drop increases (indicating dirt-laden filters), the input signal to PremierLink causes the filter status point to read "DIRTY".

Using Filter Timer Hours: Refer to Form 33CS-68SI for instructions on using the PremierLink Configuration screens and on unit alarm sequence.

Supply Fan Status Switch —

The PremierLink control can monitor supply fan operation through a field-supplied/installed differential pressure switch. This sequence will prevent (or interrupt) operation of unit cooling, heating and economizer functions until the pressure switch contacts are closed indicating proper supply fan operation.

Install the differential pressure switch in the supply fan section according to switch manufacturer's instructions. Arrange the switch contact to be open on no flow and to close as pressure rises indicating fan operation.

Connect one side of the switch's NO contact set to CTB's THERMOSTAT-R terminal. Connect the other side of the NO contact set to TB1-8. Setpoint for Supply Fan Status is set at the switch. See Fig. 55.

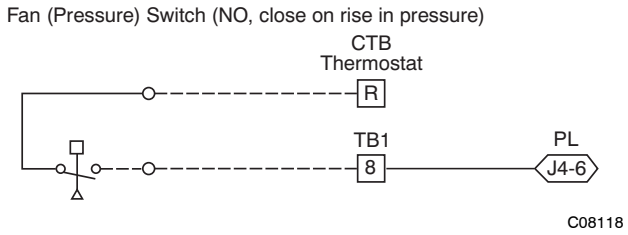

Fig. 55 - PremierLink Wiring Fan Pressure Switch Connection

Remote Occupied Switch —

The PremierLink control permits a remote timeclock to override the control's on-board occupancy schedule and place the unit into Occupied mode. This function may also provide a "Door Switch" time delay function that will terminate cooling and heating functions after a 2-20 minute delay.

Connect one side of the NO contact set on the timeclock to CTB's THERMOSTAT-R terminal. Connect the other side of the timeclock contact to the unit's TB1-2 terminal (see Fig. 56).

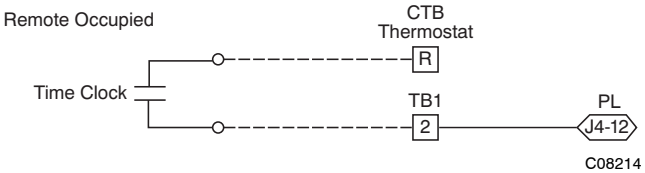

Fig. 56 - PremierLink Wiring Remote Occupied

Refer to Form 33CS-68SI for additional information on configuring the PremierLink control for Door Switch timer function.

Power Exhaust (output) -

Connect the accessory Power Exhaust contactor coils(s) per Fig. 57.

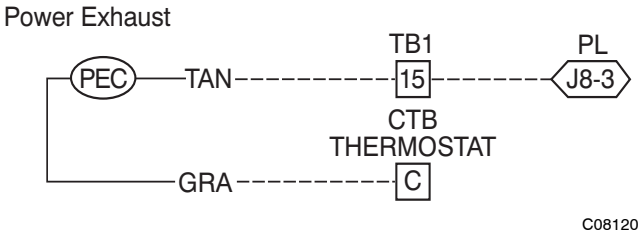

Fig. 57 - PremierLink Power Exhaust Output Connection

NOTE: The Power Exhaust and Humidi-MiZer® options can not be used with PremierLink at the same time as both options require connection at TB1-15 (AUX OUT).

CCN Communication Bus —

The PremierLink controller connects to the bus in a daisy chain arrangement. Negative pins on each component must be connected to respective negative pins, and likewise, positive pins on each component must be connected to respective positive pins. The controller signal pins must be wired to the signal ground pins. Wiring connections for CCN must be made at the 3-pin plug.

At any baud (9600, 19200, 38400 baud), the number of controllers is limited to 239 devices maximum. Bus length may not exceed 4000 ft, with no more than 60 total devices on any 1000-ft section. Optically isolated RS-485 repeaters are required every 1000 ft.

NOTE: Carrier device default is 9600 band.

Communications Bus Wire Specifications: The CCN Communication Bus wiring is field-supplied and field-installed. It consists of shielded 3-conductor cable with drain (ground) wire. The cable selected must be identical to the CCN Communication Bus wire used for the entire network.

See Table 9 for recommended cable.

Table 9 – Recommended Cables

MANUFACTURER	CABLE PART NO.
Alpha	2413 or 5463
American	A22503
Belden	8772
Columbia	02525

NOTE: Conductors and drain wire must be at least 20 AWG, stranded, and tinned copper. Individual conductors must be insulated with PVC, PVC/nylon, vinyl, Teflon, or polyethylene. An aluminum/polyester 100% foil shield and an outer jacket of PVC, PVC/nylon, chrome vinyl, or Teflon with a minimum operating temperature range of -20°C to 60°C is required. Do not run communication wire in the same conduit as or next to any AC voltage wiring.

The communication bus shields must be tied together at each system element. If the communication bus is entirely within one building, the resulting continuous shield must be connected to ground at only one single point. If the communication bus cable exits from one building and enters another building, the shields must be connected to the grounds at a lightning suppressor in each building (one point only).

Connecting CCN bus:

NOTE: When connecting the communication bus cable, a color code system for the entire network is recommended to simplify installation and checkout. See Table 10 for the recommended color code.

Table 10 – Color Code Recommendations

SIGNAL TYPE	CCN BUS WIRE COLOR	CCN PLUG PIN NUMBER
+	Red	1
Ground	White	2
–	Black	3

Connect the CCN (+) lead (typically RED) to the unit's TB1-12 terminal. Connect the CCN (ground) lead (typically WHT) to the unit's TB1-14 terminal. Connect the CCN (-) lead (typically BLK) to the unit's TB1-16 terminal. See Fig. 58.

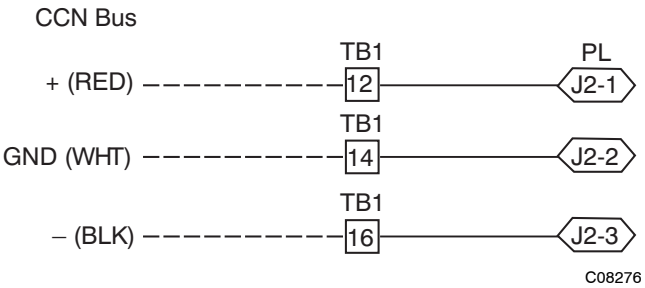

Fig. 58 - PremierLink CCN Bus Connections

48TC

RTU Open Control System

The RTU Open control is factory-mounted in the 48TC unit's main control box, to the left of the CTB. See Fig. 60 (or Fig. 61). Factory wiring is completed through harnesses connected to the CTB. Field connections for RTU Open sensors will be made at the Phoenix connectors on the RTU Open board. The factory-installed RTU Open control includes the supply-air temperature (SAT) sensor. The outdoor air temperature (OAT) sensor is included in the FIOP/accessory EconoMi$er2 package.

The RTU Open controller is an integrated component of the Carrier rooftop unit. Its internal application programming provides optimum performance and energy efficiency. RTU Open enables the unit to run in 100% stand-alone control mode, Carrier's i-Vu® Open network, or a Third Party Building Automation System (BAS). On-board DIP switches allow you to select your protocol (and baud rate) of choice among the four most popular protocols in use today: BACnet, Modbus, Johnson N2 and LonWorks. (See Fig. 59.)

Refer to Table 11, RTU Open Controller Inputs and Outputs for locations of all connections to the RTU Open board.

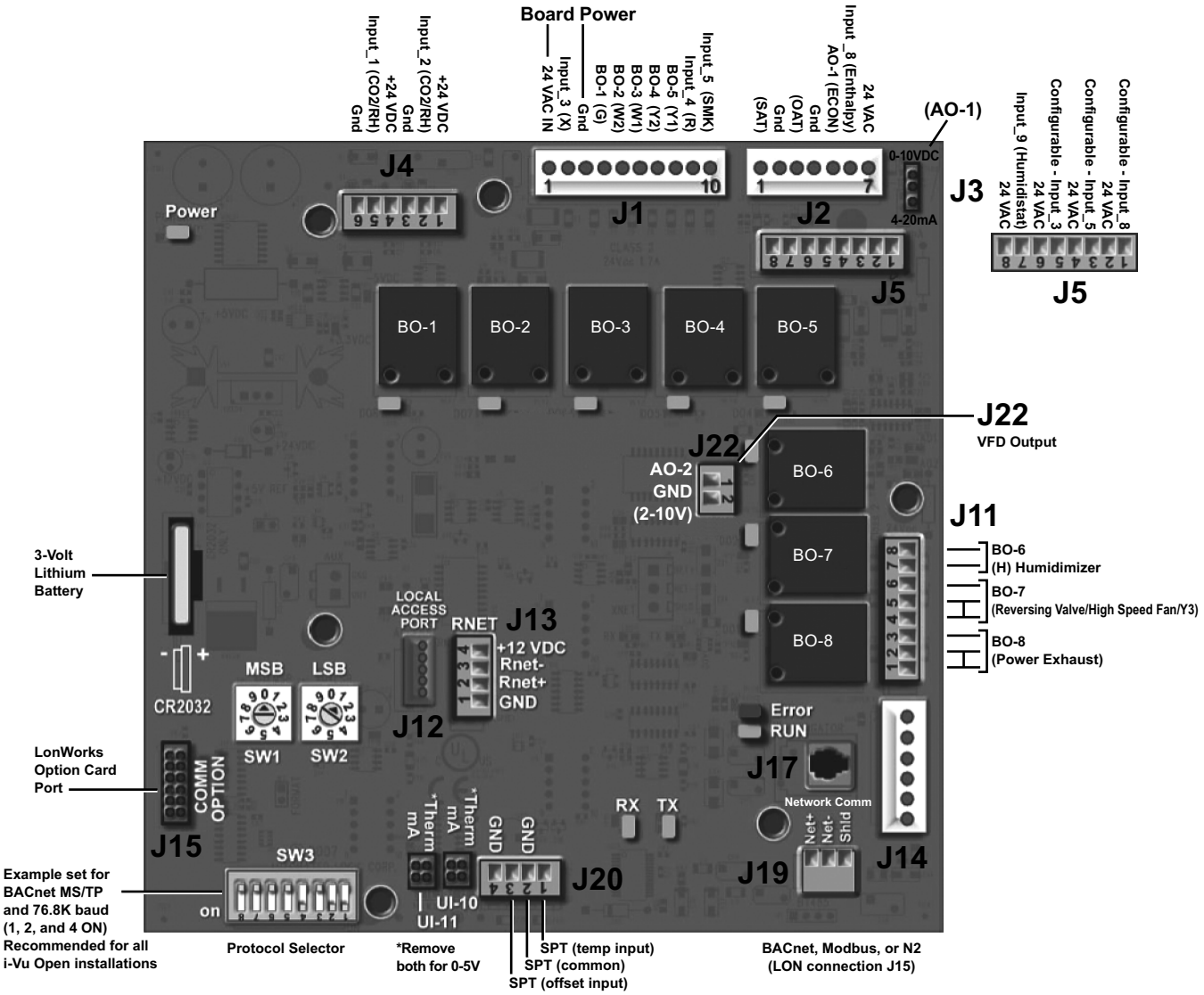

Fig. 59 - RTU Open Multi-Protocol Control Board

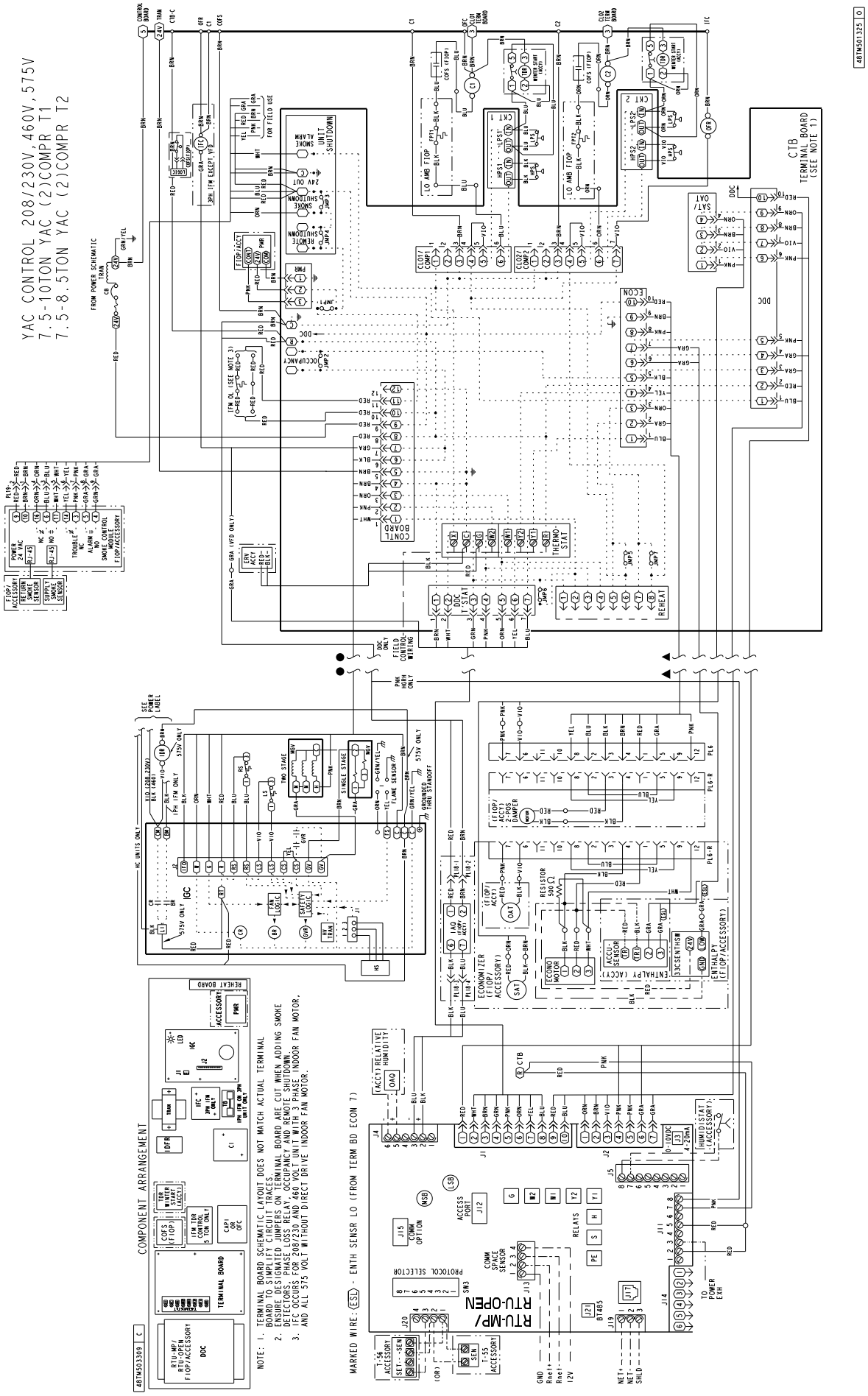

Fig. 60 - RTU Open System Control Wiring Diagram

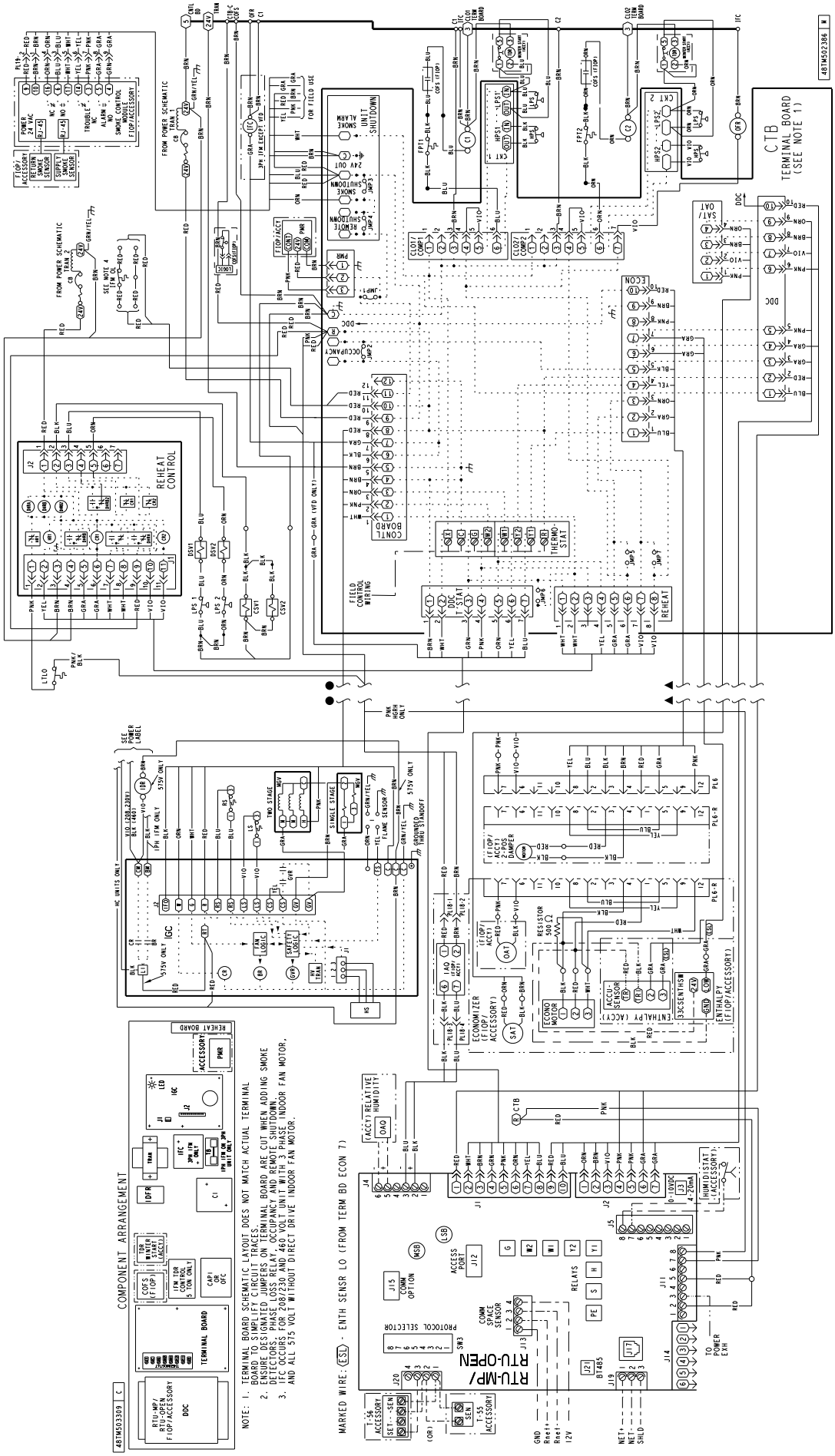

Fig. 61 - RTU Open System Control Wiring Diagram with Humidi-MiZer®

Table 11 – RTU Open Controller Inputs and Outputs

POINT NAME	BACnet OBJECT NAME	TYPE OF I/O	CONNECTION PIN NUMBER(S)	CHANNEL DESIGNATION
DEDICATED INPUTS				
Space Temp / Zone Temp	zone_temp	AI (10K Thermistor)	J20–1 & 2	Analog Input 10
Supply Air Temperature	sa_temp	AI (10K Thermistor)	J2–1 & 2	Analog Input 6
Outside Air Temperature	oa_temp	AI (10K Thermistor)	J2–3 & 4	Analog Input 7
Space Temperature Offset Pot	stpt_adj_offset	AI (100K Potentiometer)	J20–3 & 4	Analog Input 11
Safety Chain Feedback	safety_status	BI (24 VAC)	J1–9	Binary Input 4
Compressor Safety Status (1)	comp_status	BI (24 VAC)	J1–2	Binary Input 3
Fire Shutdown Status	firedown_status	BI (24 VAC)	J1–10	Binary Input 5
Enthalpy Status	enthalpy_status	BI (24 VAC)	J2–6 & 7	Binary Input 8
Humidistat Input Status	humstat_status	BI (24 VAC)	J5–7 & 8	Binary Input 9
Zone Temperature	n/a	n/a	J13–1–4	Rnet
CONFIGURABLE INPUTS (4)				
Indoor Air CO2	iaq	AI (4–20 mA)	J4–2 & 3 or J4–5 & 6	Analog Input 2
Outdoor Air CO2	oaq	AI (4–20 mA)		Analog Input 1
Space Relative Humidity	space_rh	AI (4–20 mA)		Analog Input 10
Supply Fan Status (2)	sfan_status	BI (24 VAC)	J5–1 & 2 or J5–3 & 4, J5–5 & 6 or J5–7 & 8 (3)	Binary Input 3, 5, 8, or 9, except where intrinsic input is used
Filter Status (2)	filter_status	BI (24 VAC)		Binary Input 3, 5, 8, or 9, except where intrinsic input is used
Door Contact (2)	door_contact_status	BI (24 VAC)		Binary Input 3, 5, 8, or 9, except where intrinsic input is used
Remote Occupancy input (2)	occ_contact_status	BI (24 VAC)		Binary Input 3, 5, 8, or 9, except where intrinsic input is used
IGC input (2)	igcovr_status	BI (24 VAC)		Binary Input 9. Mandatory input on gas heat units.
OUTPUTS				
Economizer Output	econ_output	AO (4–20mA)	J2–5	Analog Output 1
Supply Fan VFD	vfd_output	AO (2–10Vdc)	J22–1 & 2	Analog Output 2
Supply Fan Relay	sfan	BO Relay (24VAC, 1A)	J1–4	Binary Output 1 (G)
Cool 1 Relay State	comp_1	BO Relay (24VAC, 1A)	J1–8	Binary Output 5 (Y1)
Cool 2 Relay State	comp_2	BO Relay (24VAC, 1A)	J1–7	Binary Output 4 (Y2)
Cool 3 Relay State	comp_3	BO Relay (24VAC, 1A)	J11–5 & 6	Binary Output 7 (Y3)
Heat 1 Relay State	heat_1	BO Relay (24VAC, 1A)	J1–6	Binary Output 3 (W1)
Heat 2 Relay State	heat_2	BO Relay (24VAC, 1A)	J1–5	Binary Output 2 (W2)
Power Exhaust Relay State	pexh	BO Relay (24VAC, 1A)	J11–2 & 3 (N.O.)	Binary Output 8 (PE)
Dehumidification Relay	dehum	BO Relay (24VAC, 1A)	J11–7 & 8 (N.O.)	Binary Output 6

LEGEND
AI – Analog Input
AO – Analog Output
BI – Binary Input
BO – Binary Output
(1) Safety Chain Feedback: 24Vac required at this terminal to provide "Run Enable" status. See Input/Output section for additional instructions.
(2) These inputs are configurable. If installed, they take the place of the default input on the specific channel. See appropriate Input Configuration Section for wiring and setup instructions.
(3) Parallel pins J5–1 = J2–6, J5–3 = J1–10, J5–5 = J1–2 are used for filed installation.
(4) Refer to the input configuration and accessory sections of the *RTU Open Multi–Protocol Controller Controls, Start–Up, Operation and Troubleshooting* manual for more detail.

The RTU Open controller requires the use of a Carrier space sensor. A standard thermostat cannot be used with the RTU Open system.

Supply Air Temperature (SAT) Sensor —

On FIOP-equipped 48TC unit, the unit is supplied with a supply-air temperature (SAT) sensor (33ZCSENSAT). This sensor is a tubular probe type, approx 6-inches (152 mm) in length. It is a nominal 10-k ohm thermistor.

The SAT is factory-wired. The SAT probe is wire-tied to the supply-air opening (on the horizontal opening end) in its shipping position. Remove the sensor for installation. Re-position the sensor in the flange of the supply-air opening or in the supply air duct (as required by local codes). Drill or punch a $^1/_2$-in. hole in the flange or duct. Use two field-supplied, self-drilling screws to secure the sensor probe in a horizontal orientation. See Fig. 42.

Outdoor Air Temperature (OAT) Sensor —

The OAT is factory-mounted in the EconoMi$er2 (FIOP or accessory). It is a nominal 10k ohm thermistor attached to an eyelet mounting ring.

EconoMi$er2 —

The RTU Open control is used with EconoMi$er2 (option or accessory) for outdoor air management. The damper position is controlled directly by the RTU Open control; EconoMi$er2 has no internal logic device.

Outdoor air management functions can be enhanced with field-installation of these accessory control devices:

Enthalpy control (outdoor air or differential sensors)
Space CO_2 sensor
Outdoor air CO_2 sensor

Field Connections

Field connections for accessory sensors and input devices are made the RTU Open, at plugs J1, J2, J4, J5, J11 and J20. All field control wiring that connects to the RTU Open must be routed through the raceway built into the corner post as shown in Fig. 33. The raceway provides the UL required clearance between high- and low-voltage wiring. Pass the control wires through the hole provided in the corner post, then feed the wires thorough the raceway to the RTU Open. Connect to the wires to the removable Phoenix connectors and then reconnect the connectors to the board.

Space Temperature (SPT) Sensors —

There are two types of SPT sensors available from Carrier, resistive input non-communicating (T55, T56, and T59) and Rnet communicating (SPS, SPPL, SPP, and SPPF) sensors. Each type has a variety of options consisting of: timed override button, set point adjustment, a LCD screen, and communication tie in. Space temperature can be also be written to from a building network or zoning system. However, it is still recommended that return air duct sensor be installed to allow stand-alone operation for back-up. Refer to the configuration section for details on controller configurations associated with space sensors.

- 33ZCT55SPT, space temperature sensor with override button (T-55)
- 33ZCT56SPT, space temperature sensor with override button and setpoint adjustment (T-56)
- 33ZCT59SPT, space temperature sensor with LCD (liquid crystal display) screen, override button, and setpoint adjustment (T-59)

Use 20 gauge wire to connect the sensor to the controller. The wire is suitable for distances of up to 500 ft. Use a three-conductor shielded cable for the sensor and setpoint adjustment connections. If the setpoint adjustment (slidebar) is not required, then an unshielded, 18 or 20 gauge, two-conductor, twisted pair cable may be used.

Connect T-55: See Fig. 43 for typical T-55 internal connections. Connect the T-55 SEN terminals to RTU Open J20-1 and J20-2. See Fig. 62.

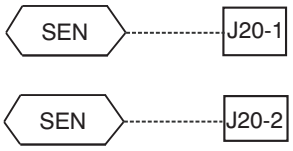

C08460

Fig. 62 - RTU Open T-55 Sensor Connections

Connect T-56: See Fig. 45 for T-56 internal connections. Install a jumper between SEN and SET terminals as illustrated. Connect T-56 terminals to RTU Open J20-1, J20-2 and J20-3 per Fig. 63.

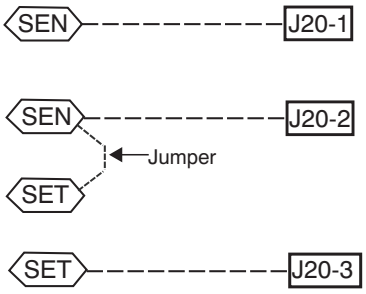

C08461

Fig. 63 - RTU Open T-56 Sensor Connections

Connect T-59: The T-59 space sensor requires a separate, isolated power supply of 24 VAC. See Fig. 64 for internal connections at the T-59. Connect the SEN terminal (BLU) to RTU Open J20-1. Connect the COM terminal (BRN) to J20-2. Connect the SET terminal (STO or BLK) to J20-3.

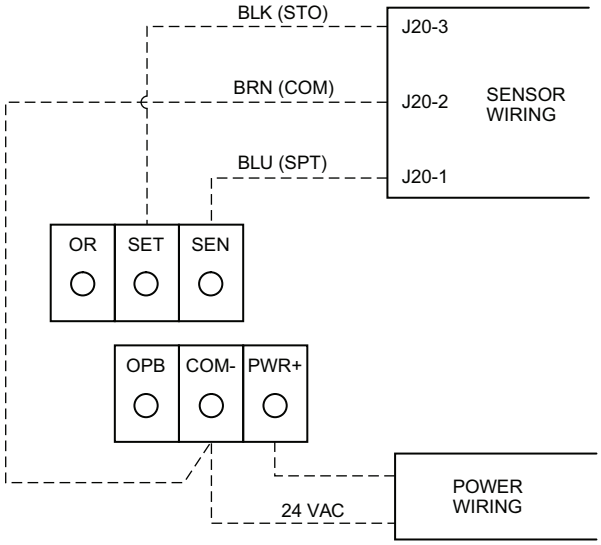

NOTE: Must use a separate isolated transformer.

C10291

Fig. 64 - Space Temperature Sensor Typical Wiring (33ZCT59SPT)

Indoor Air Quality (CO_2) Sensor —

The indoor air quality sensor accessory monitors space carbon dioxide (CO_2) levels. This information is used to monitor IAQ levels. Several types of sensors are available, for wall mounting in the space or in return duct, with and without LCD display, and in combination with space temperature sensors. Sensors use infrared technology to measure the levels of CO_2 present in the space air.

The CO_2 sensors are all factory set for a range of 0 to 2000 ppm and a linear mA output of 4 to 20. Refer to the instructions supplied with the CO_2 sensor for electrical requirements and terminal locations. See Fig. 48 for typical CO_2 sensor wiring schematic.

To accurately monitor the quality of the air in the conditioned air space, locate the sensor near a return-air grille (if present) so it senses the concentration of CO_2 leaving the space. The sensor should be mounted in a location to avoid direct breath contact.

Do not mount the IAQ sensor in drafty areas such as near supply ducts, open windows, fans, or over heat sources. Allow at least 3 ft (0.9 m) between the sensor and any corner. Avoid mounting the sensor where it is influenced by the supply air; the sensor gives inaccurate readings if the supply air is blown directly onto the sensor or if the supply air does not have a chance to mix with the room air before it is drawn into the return airstream.

Wiring the Indoor Air Quality Sensor: For each sensor, use two 2-conductor 18 AWG (American Wire Gage) twisted-pair cables (unshielded) to connect the separate isolated 24 vac power source to the sensor and to connect the sensor to the control board terminals.

To connect the sensor to the control, identify the positive (4 to 20 mA) and ground (SIG COM) terminals on the sensor. See Fig. 48. Connect the 4-20 mA terminal to RTU Open J4-2 and connect the SIG COM terminal to RTU Open J4-3. See Fig. 65.

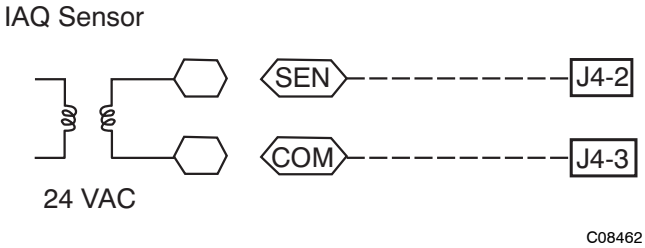

Fig. 65 - RTU Open / Indoor CO_2 Sensor (33ZCSENCO2) Connections

Outdoor Air Quality Sensor (PNO 33ZCSENCO2 plus weatherproof enclosure) —

The outdoor air CO_2 sensor is designed to monitor carbon dioxide (CO_2) levels in the outside ventilation air and interface with the ventilation damper in an HVAC system. The OAQ sensor is packaged with an outdoor cover. See Fig. 50. The outdoor air CO_2 sensor must be located in the economizer outside air hood.

Wiring the Outdoor Air CO_2 Sensor: A dedicated power supply is required for this sensor. A two-wire cable is required to wire the dedicated power supply for the sensor. The two wires should be connected to the power supply and terminals 1 and 2.

To connect the sensor to the control, identify the positive (4 to 20 mA) and ground (SIG COM) terminals on the OAQ sensor. See Fig. 48. Connect the 4 to 20 mA terminal to RTU Open J4-5. Connect the SIG COM terminal to RTU Open J4-6. See Fig. 66

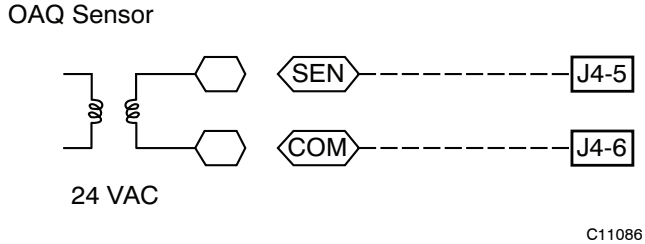

Fig. 66 - RTU Open / Outdoor CO_2 Sensor (33ZCSENCO2) Connections

Space Relative Humidity Sensor or Humidistat —

NOTE: The accessory space relative humidity sensor and humidistat are not available for single phase (-3 voltage code) models.

Humidi-MiZer® Control Wiring: In units equipped with the Humidi-MiZer option there are two pink (PNK) wires loose in the control box used to control the dehumidification function of the unit. These pink wires are meant to be tied to a space humidistat or thermidistat on an electromechanical unit. On RTU Open equipped units these pink wires must be connected to J11-7 & 8 to allow the Open board to operate the dehumidification function for the unit. Disconnect the J11 Phoenix style connector from the board and use the plug screws to secure the pink wires in pins 7 and 8, reconnect the plug to the board at J11.

Relative Humidity Sensors (Space or Duct Mounted): The accessory space humidity sensor (33ZCSENSRH-02) or duct humidity sensor (33ZCSENDRH-02) is used to measure the relative humidity of air within the space or return air duct. The RH reading is used to control the Humidi-MiZer option of the rooftop unit. For wiring distances up to 500 ft (152 m), use a 3-conductor, 18 or 20 AWG shielded cable. The shield must be removed from the sensor end of the cable and grounded at the unit end. The current loop power for sensor is provided by the RTU Open controller as 24vdc. Refer to the instructions supplied with the RH sensor for the electrical requirements and terminal locations. RTU Open configurations must be changed after adding an RH sensor. See Fig. 67 and 68 for typical RH sensor wiring.

- J4-1 or J4-4 = 24vdc loop power
- J4-2 or J4-5 = 4-20mA signal input

NOTE: The factory default for dehumidification control is normally open humidistat.

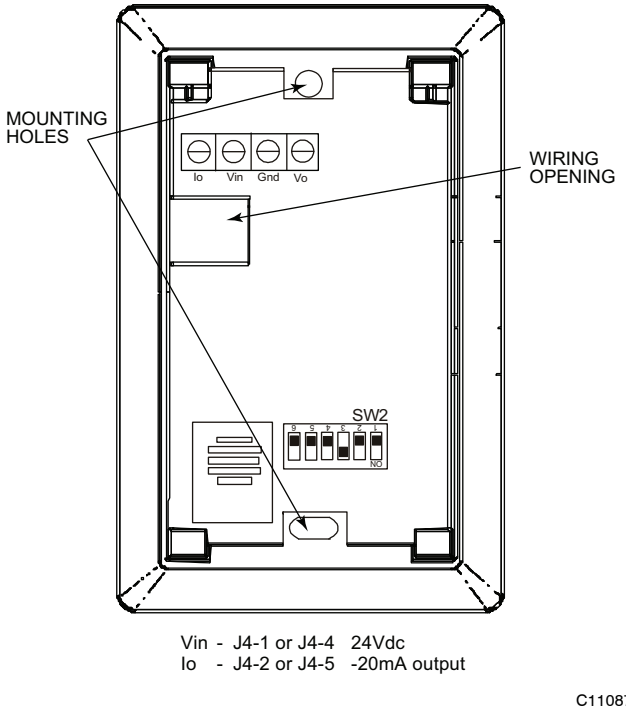

Fig. 67 - Space Relative Humidity Sensor Typical Wiring

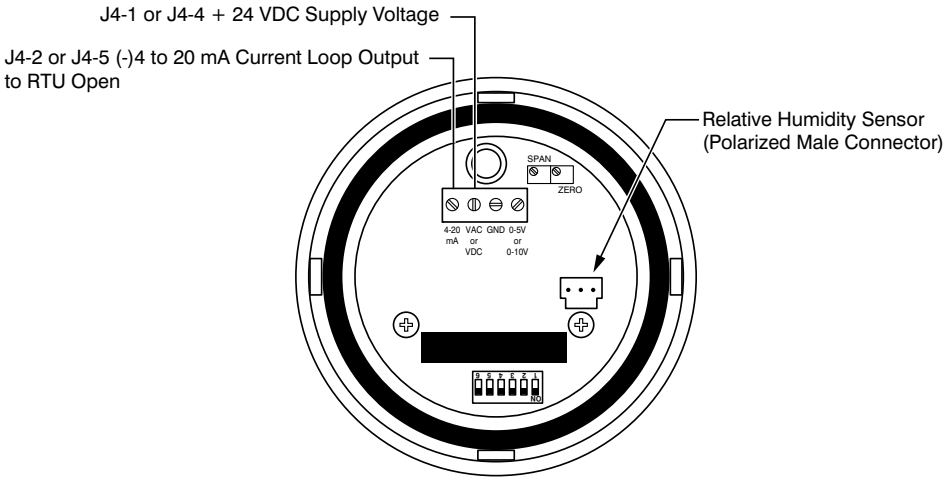

Fig. 68 - Duct Relative Humidity Sensor Typical Wiring

Humidistat: The accessory humidistat provides the RTU Open insight to the relative humidity in the space. The humidistat reads the RH level in the space and compares it to its setpoint to operate a dry contact. The humidistat is a dedicated input on the configurable input 9 and tells the RTU Open when the RH level is HIGH or LOW. The normal condition for humidity is LOW. A normally open humidistat is the factory default control for the Humidi-MiZer® option.

To wire in the field:

- J5-8 = 24 VAC source for dry contact
- J5-7 = Signal input

Smoke Detector/Fire Shutdown (FSD) —

On 48TC units equipped with factory-installed Smoke Detector(s), the smoke detector controller implements the unit shutdown through its NC contact set connected to the unit's CTB input. The FSD function is initiated via the smoke detector's Alarm NO contact set. The RTU Open controller communicates the smoke detector's tripped status to the BAS building control. See Figs. 60 and 61, the RTU Open System Control wiring schematics.

The Fire Shutdown Switch configuration, ***MENU→Config→Inputs→input 5***, identifies the normally open status of this input when there is no fire alarm.

Connecting Discrete Inputs —

Filter Status: The filter status accessory is a field-installed accessory. This accessory detects plugged filters. When installing this accessory, the unit must be configured for filter status by setting ***MENU→Config→Inputs→input 3, 5, 8, or 9*** to Filter Status and normally open (N/O) or normally closed (N/C). Input 8 or 9 is recommended for easy of installation. Refer to Fig. 59 and Fig. 60 or Fig. 61 for wire terminations at J5.

Fan Status: The fan status accessory is a field-installed accessory. This accessory detects when the indoor fan is blowing air. When installing this accessory, the unit must be configured for fan status by setting ***MENU→Config→Inputs→input 3, 5, 8, or 9*** to Fan Status and normally open (N/O) or normally closed (N/C). Input 8 or 9 is recommended for easy of installation. Refer to Fig. 59 and Figs. 60 or 61 for wire terminations at J5.

Remote Occupancy: The remote occupancy accessory is a field-installed accessory. This accessory overrides the unoccupied mode and puts the unit in occupied mode. When installing this accessory, the unit must be configured for remote occupancy by setting ***MENU→Config→Inputs→input 3, 5, 8, or 9*** to Remote Occupancy and normally open (N/O) or normally closed (N/C).

Also set ***MENU→Schedules→occupancy source*** to DI on/off. Input 8 or 9 is recommended for easy of installation. Refer to Fig. 59 and Table 60 for wire terminations at J5.

Power Exhaust (output): The relay used by the RTU Open board to control power exhaust is a dry contact which means it does not have 24vac. This 24vac must be connected to the relay to allow it to operate the power exhaust relay in the PE accessory. A 24vac source must be provided to J11-2 on the RTU Open control board. This can be provided by the unit's transformer from various sources. The "R" terminal on the unit's low voltage terminal board (LVTB) is a logical source. Refer to Fig. 59 and Figs. 60 or 61 for wire terminations at J11.

Communication Wiring - Protocols

General —

Protocols are the communication languages spoken by control devices. The main purpose of a protocol is to communicate information in the most efficient method possible. Different protocols exist to provide different kinds of information for different applications. In the BAS application, many different protocols are used, depending on manufacturer. Protocols do not change the function of a controller; just make the front end user different.

The RTU Open can be set to communicate on four different protocols: BACnet, Modbus, N2, and LonWorks. Switch 3 (SW3) on the board is used to set protocol and baud rate. Switches 1 and 2 (SW1 and SW2) are used to set the board's network address. See Fig. 69 and 70 for protocol switch settings and address switches. The 3rd party connection to the RTU Open is through plug J19. See Fig. 71 for wiring.

NOTE: Power must be cycled after changing the SW1-3 switch settings.

Refer to the *RTU Open v3 Integration Guide* for more detailed information on protocols, 3rd party wiring, and networking.

SW3 Protocol Selection

PROTOCOL	DS8	DS7	DS6	DS5	DS4	DS3	DS2	DS1
BACnet MS/TP (Master)	Unused	OFF	OFF	OFF	ON	OFF	Select Baud	Select Baud
Modbus (Slave)	Unused	OFF	OFF	ON	ON	OFF	Select Baud	Select Baud
N2 (Slave)	Unused	OFF	OFF	OFF	ON	ON	OFF	OFF
LonWorks	Unused	ON	ON	OFF	ON	OFF	OFF	ON

NOTE:
DS = Dip Switch
BACnet MS/TP SW3 example shown

Baud Rate Selections

BAUD RATE	DS2	DS1
9600	OFF	OFF
19,200	ON	OFF
38,400	OFF	ON
76,800	ON	ON

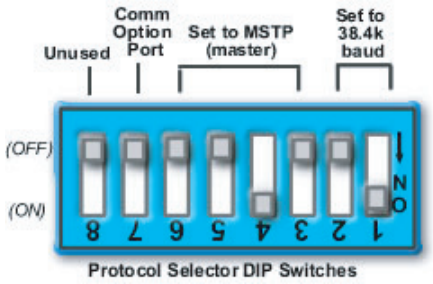

C07166

Fig. 69 - RTU Open SW3 Dip Switch Settings

C10815

Fig. 70 - RTU Open Address Switches

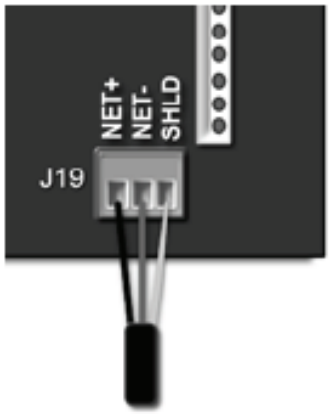

C10816

Fig. 71 - Network Wiring

Local Access

Wall Mounted Equipment Touch

The Equipment Touch is a wall mounted interface used to connect to the RTU Open to access the control information, read sensor values, and maintenance. This is an accessory interface that does not come with the RTU Open controller. You wire the Equipment Touch to the RTU Open's J13 local access port. There are 2 password protected levels in the display (User and Admin). See the Equipment Touch Installation and Setup Guide for more information. See Appendix A for navigation and screen content.

Field Assistant

Field Assistant is a computer program included with the purchase of the Tech Tool Kit (USB-TKIT). This is a field Tech Tool to set-up, service, or download application software to the RTU Open controller and includes a USB Link Cable. The link cable connects a USB port to the J12 local access port. The Field Assistant's menu structure is similar and functions the same as i-Vu®. See Fig. 72.

RTU Open Troubleshooting —

Communication LEDs The LEDs indicate if the controller is speaking to the devices on the network. The LEDs should reflect communication traffic based on the baud rate set. The higher the baud rate the more solid the LEDs will appear. See Table 12.

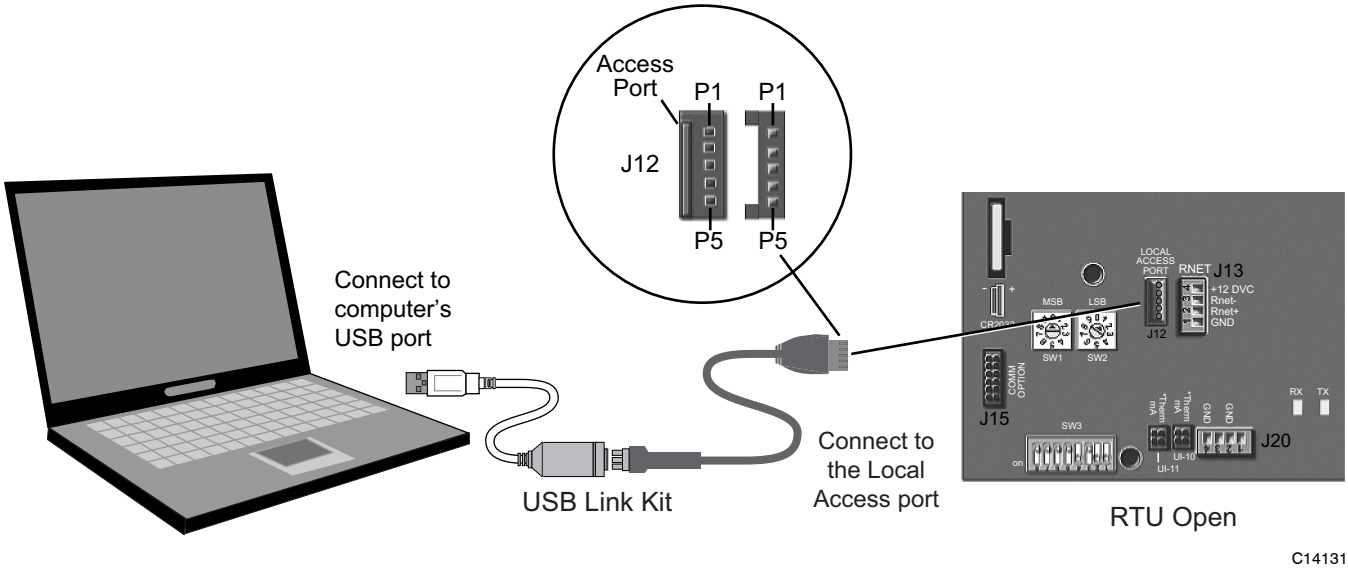

Fig. 72 - PC Running Field Assistant

Table 12 – LEDs

The LEDs on the RTU Open show the status of certain functions

If this LED is on...	Status is...
Power	The RTU Open has power
Rx	The RTU Open is receiving data from the network segment
Tx	The RTU Open is transmitting data over the network segment
BO#	The binary output is active

The **Run** and **Error** LEDs indicate control module and network status

If Run LED shows...	And Error LED shows...	Status is...
2 flashes per second	Off	Normal
2 flashes per second	2 flashes, alternating with **Run** LED	Five minute auto–restart delay after system error
2 flashes per second	3 flashes, then off	Control module has just been formatted
2 flashes per second	4 flashes, then pause	Two or more devices on this network have the same MSTP network address
2 flashes per second	On	Exec halted after frequent system errors or control programs halted
5 flashes per second	On	Exec start–up aborted, Boot is running
5 flashes per second	Off	Firmware transfer in progress, Boot is running
7 flashes per second	7 flashes per second, alternating with **Run** LED	Ten second recovery period after brownout
14 flashes per second	14 flashes per second, alternating with **Run** LED	Brownout
On	On	Failure. Try the following solutions: • Turn the RTU Open off, then on. • Format the RTU Open. • Download memory to the RTU Open. • Replace the RTU Open.

NOTE: Refer to the *RTU Open Multi-Protocol Controller Controls, Start-Up, Operation and Troubleshooting* manual for complete configuration of RTU Open, operating sequences and troubleshooting information. Refer to the *RTU Open v3 Integration Guide* for details on configuration and troubleshooting of connected networks. Have a copy of these manuals available at unit start-up.

Outdoor Air Enthalpy Control (PNO 33CSENTHSW)

The enthalpy control (33CSENTHSW) is available as a field-installed accessory to be used with the EconoMi$er2 damper system. The outdoor air enthalpy sensor is part of the enthalpy control. (The separate field-installed accessory return air enthalpy sensor (33CSENTSEN) is required for differential enthalpy control. See Fig. 73.)

Locate the enthalpy control in the economizer next to the Actuator Motor. Locate two GRA leads in the factory harness and connect the gray lead labeled "ESL" to the terminal labeled "LOW". See Fig. 73. Connect the enthalpy control power input terminals to economizer actuator power leads RED (connect to 24V) and BLK (connect to GND).

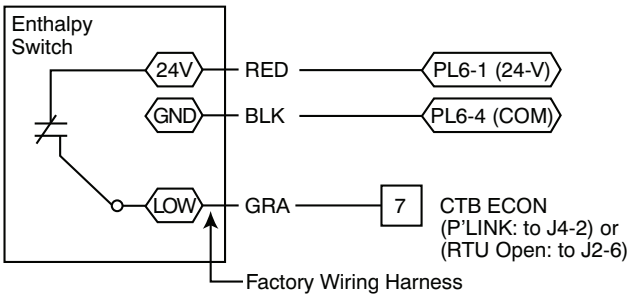

Fig. 73 - Enthalpy Switch (33CSENTHSW) Connections

The outdoor enthalpy changeover setpoint is set at the enthalpy controller.

Differential Enthalpy Control —

Differential enthalpy control is provided by sensing and comparing the outside air and return air enthalpy conditions. Install the outdoor air enthalpy control as described above. Add and install a return air enthalpy sensor.

Return Air Enthalpy Sensor —

Mount the return-air enthalpy sensor (33CSENTSEN) in the return-air section of the economizer. The return air sensor is wired to the enthalpy controller (33CSENTHSW). See Fig. 74.

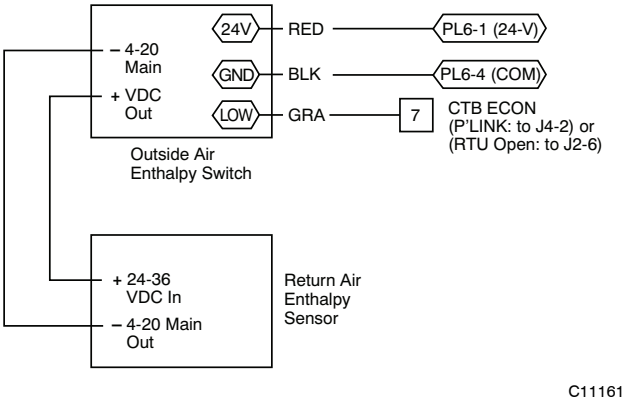

Fig. 74 - Outside and Return Air Enthalpy Sensor Wiring

Smoke Detectors

Smoke detectors are available as factory-installed options on 48TC models. Smoke detectors may be specified for Supply Air only or for Return Air without or with economizer or in combination of Supply Air and Return Air. All components necessary for operation are factory-provided and mounted. The unit is factory-configured for immediate smoke detector shutdown operation; additional wiring or modifications to unit terminal board may be necessary to complete the unit and smoke detector configuration to meet project requirements.

Units equipped with factory-optional Return Air smoke detectors require a relocation of the sensor module at unit installation. See Fig. 75 for the as shipped location.

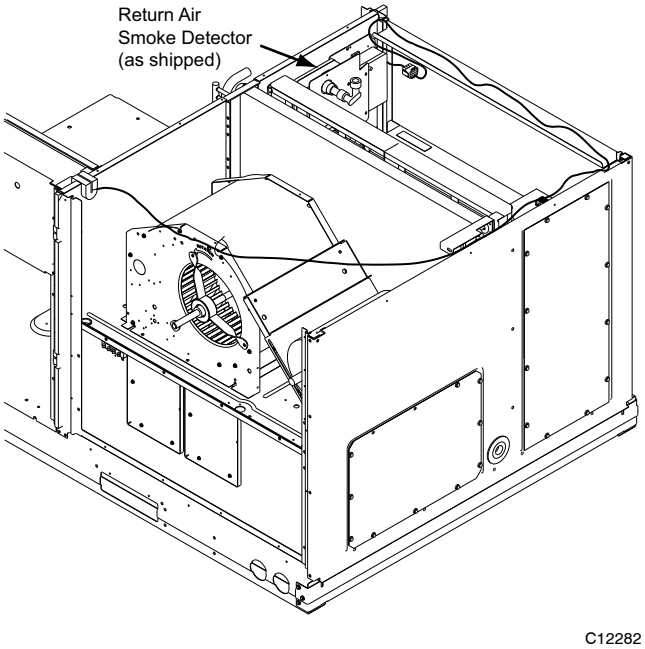

Fig. 75 - Return Air Smoke Detector, Shipping Position

Completing Installation of Return Air Smoke Sensor:

1. Unscrew the two screws holding the Return Air Smoke Detector assembly. See Fig. 76, Step 1. Save the screws.
2. Turn the assembly 90 and then rotate end to end. Make sure that the elbow fitting is pointing down. See Fig. 76, Step 2.
3. Screw the sensor and detector plate into its operating position using screws from Step 1. See Fig. 76, Step 3.
4. Connect the flexible tube on the sampling inlet to the sampling tube on the basepan.

Additional Application Data —

Refer to Catalog No. HKRNKA-1XA for discussions on additional control features of these smoke detectors including multiple unit coordination.

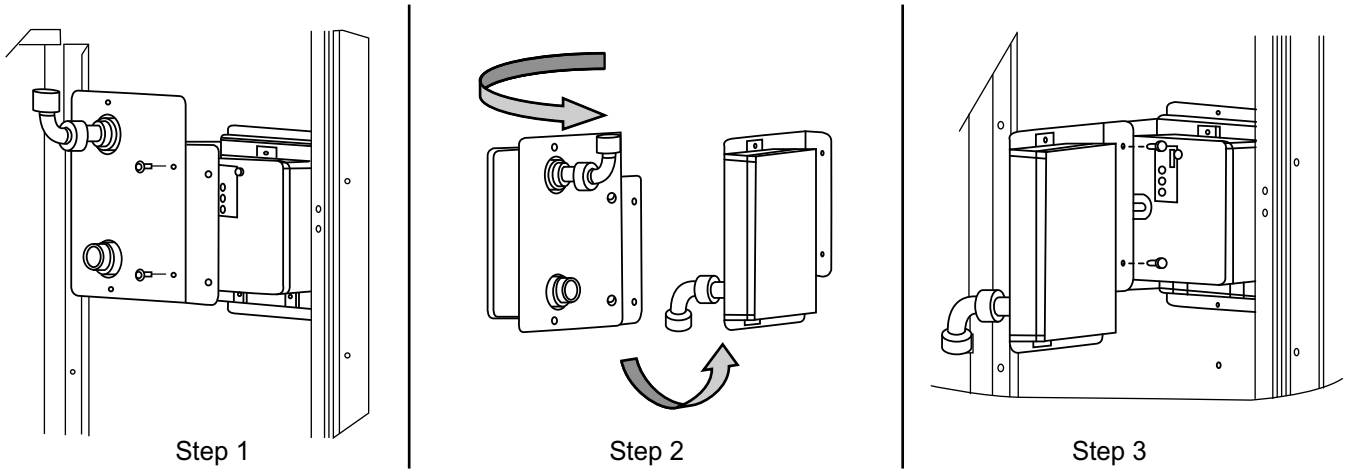

Fig. 76 - Completing Installation of Return Air Smoke Sensor

Legend and Notes for Tables 13 and 14

LEGEND:

BRKR	–	Circuit breaker
CO	–	Convenient outlet
DD	–	Direct drive (indoor fan motor)
DISC	–	Disconnect
FLA	–	Full load amps
IFM	–	Indoor fan motor
LRA	–	Locked rotor amps
MCA	–	Minimum circuit amps
MOCP	–	MAX FUSE or HACR Breaker
PE	–	Power exhaust
PWRD CO	–	Powered convenient outlet
UNPWR CO	–	Unpowered convenient outlet

NOTES:

1. In compliance with NEC requirements for multimotor and combination load equipment (refer to NEC Articles 430 and 440), the overcurrent protective device for the unit shall be fuse or HACR breaker. Canadian units may be fuse or circuit breaker.
2. **Unbalanced 3-Phase Supply Voltage**
   Never operate a motor where a phase imbalance in supply voltage is greater than 2%. Use the following formula to determine the percentage of voltage imbalance.

$$\text{\% Voltage Imbalance} = 100 \times \frac{\text{max voltage deviation from average voltage}}{\text{average voltage}}$$

Example: Supply voltage is 230-3-60

AB = 224 v
BC = 231 v
AC = 226 v

$$\text{Average Voltage} = \frac{(224 + 231 + 226)}{3} = \frac{681}{3}$$

$$= 227$$

Determine maximum deviation from average voltage.
(AB) 227 – 224 = 3 v
(BC) 231 – 227 = 4 v
(AC) 227 – 226 = 1 v
Maximum deviation is 4 v.
Determine percent of voltage imbalance.

$$\text{\% Voltage Imbalance} = 100 \times \frac{4}{227}$$

$$= 1.76\%$$

This amount of phase imbalance is satisfactory as it is below the maximum allowable 2%.

IMPORTANT: If the supply voltage phase imbalance is more than 2%, contact your local electric utility company immediately.

Table 13 – Unit Wire/Fuse or HACR Breaker Sizing Data - Single Speed Indoor Fan Motor

UNIT	NOM.V–Ph–Hz	IFM TYPE	NO C.O. or UNPWR C.O.								w/ PWRD C.O.							
			NO P.E.				w/ P.E. (pwrd fr/ unit)				NO P.E.				w/ P.E. (pwrd fr/ unit)			
			MCA	FUSE or HACR BRKR	DISC. SIZE		MCA	FUSE or HACR BRKR	DISC. SIZE		MCA	FUSE or HACR BRKR	DISC. SIZE		MCA	FUSE or HACR BRKR	DISC. SIZE	
					FLA	LRA			FLA	LRA			FLA	LRA			FLA	LRA
48TC*A08 (1–stage cool)	208/230–3–60	STD	40/40	60/60	38/38	208	44/43	60/60	43/42	212	45/44	60/60	44/43	213	49/48	60/60	48/48	217
		MED	43/43	60/60	42/42	244	47/47	60/60	46/46	248	48/48	60/60	47/47	249	52/52	60/60	52/52	253
		HIGH	48/47	60/60	48/47	260	52/51	60/60	52/51	264	53/52	60/60	53/52	265	57/56	80/80	58/57	269
	460–3–60	STD	20	30	19	122	22	30	21	124	22	30	21	124	24	30	23	126
		MED	22	30	21	140	23	30	23	142	24	30	23	142	26	30	25	144
		HIGH	24	30	23	148	26	30	25	150	26	30	26	150	28	35	28	152
	575–3–60	STD	15	20	14	89	18	25	18	93	16	20	16	91	20	25	20	95
		MED	16	20	15	104	20	25	19	108	17	25	17	106	21	25	21	110
		HIGH	19	25	18	118	22	30	23	122	20	25	20	120	24	30	24	124
48TC*D08 (2–stage cool)	208/230–3–60	STD	39/39	50/50	41/40	210	43/43	50/50	45/45	214	44/44	50/50	46/46	215	48/48	60/60	51/50	219
		MED	42/42	50/50	44/44	246	46/46	50/50	49/49	250	47/47	60/60	50/50	251	51/51	60/60	54/54	255
		HIGH	48/47	60/50	50/49	262	51/51	60/60	55/54	266	52/52	60/60	56/55	267	56/55	60/60	60/59	271
	460–3–60	STD	18	20	19	104	20	25	21	106	20	25	21	106	22	25	23	108
		MED	20	25	21	122	22	25	23	124	22	25	23	124	24	30	25	126
		HIGH	22	25	23	130	24	30	25	132	24	30	26	132	26	30	28	134
	575–3–60	STD	13	15	13	77	17	20	17	81	14	15	15	79	18	20	19	83
		MED	14	15	14	92	18	20	19	96	16	20	16	94	19	25	21	98
		HIGH	17	20	17	106	21	25	22	110	19	20	19	108	23	25	24	112

See “Legend and Notes for Tables 13 and 14” on page 44.

Table 13 – Unit Wire/Fuse or HACR Breaker Sizing Data - Single Speed Indoor Fan Motor (cont)

UNIT	NOM.V–Ph–Hz	IFM TYPE	NO C.O. or UNPWR C.O.								w/ PWRD C.O.							
			NO P.E.				w/ P.E. (pwrd fr/ unit)				NO P.E.				w/ P.E. (pwrd fr/ unit)			
			MCA	FUSE or HACR BRKR	DISC. SIZE		MCA	FUSE or HACR BRKR	DISC. SIZE		MCA	FUSE or HACR BRKR	DISC. SIZE		MCA	FUSE or HACR BRKR	DISC. SIZE	
					FLA	LRA			FLA	LRA			FLA	LRA			FLA	LRA
48TC*A09 (1–stage cool)	208/230–3–60	STD	46/45	60/60	43/43	239	49/49	60/60	48/47	243	50/50	60/60	49/49	244	54/54	80/80	53/53	248
		MED	47/47	60/60	45/45	260	51/51	60/60	50/49	264	52/52	60/60	51/51	265	56/56	80/80	55/55	269
		HIGH	51	60	50	289	55	80	54	293	56	80	55	294	60	80	59	298
	460–3–60	STD	23	30	22	117	25	30	24	119	25	30	24	119	27	40	26	121
		MED	24	30	23	127	26	30	25	129	26	30	25	129	28	40	27	131
		HIGH	26	30	25	142	28	40	27	144	28	40	27	144	30	40	29	146
	575–3–60	STD	19	30	17	91	22	30	22	95	20	30	19	93	24	30	24	97
		MED	19	30	18	95	23	30	22	99	21	30	20	97	24	30	24	101
		HIGH	20	30	19	106	24	30	23	110	21	30	21	108	25	30	25	112
48TC*D09 (2–stage cool)	208/230–3–60	STD	40/40	50/50	42/42	225	44/44	50/50	46/46	229	45/45	50/50	47/47	230	49/49	60/60	52/51	234
		MED	42/42	50/50	44/44	246	46/46	60/50	48/48	250	47/47	60/60	49/49	251	51/51	60/60	54/53	255
		HIGH	46	50	48	275	50	60	52	279	51	60	54	280	54	60	58	284
	460–3–60	STD	19	20	19	118	20	25	21	120	21	25	22	120	23	25	24	122
		MED	20	25	20	128	21	25	22	130	22	25	23	130	24	25	25	132
		HIGH	21	25	22	143	23	25	24	145	24	25	25	145	25	30	27	147
	575–3–60	STD	16	20	16	85	19	25	20	89	17	20	18	87	21	25	22	91
		MED	16	20	16	89	20	25	20	93	18	20	18	91	21	25	22	95
		HIGH	17	20	17	100	21	25	21	104	18	20	19	102	22	25	23	106
48TC*A12 (1–stage cool)	208/230–3–60	STD	48/48	60/60	46/46	290	52/52	60/60	50/50	294	53/53	60/60	52/51	295	57/56	80/80	56/56	299
		MED	52	60	50	319	55	80	55	323	56	80	56	324	60	80	60	328
		HIGH	55/54	80/80	54/53	321	58/58	80/80	58/57	325	59/59	80/80	59/58	326	63/62	80/80	64/63	330
	460–3–60	STD	26	40	25	146	28	40	27	148	29	40	27	148	30	45	30	150
		MED	28	40	27	161	30	45	29	163	30	45	30	163	32	45	32	165
		HIGH	29	45	28	162	31	45	30	164	32	45	31	164	33	45	33	166
	575–3–60	STD	19	30	18	95	23	30	22	99	21	30	20	97	24	30	24	101
		MED	20	30	19	106	24	30	23	110	21	30	21	108	25	30	25	112
		HIGH	23	30	22	120	26	30	26	124	24	30	24	122	28	35	28	126
48TC*D12 (2–stage cool)	208/230–3–60	STD	46/46	60/60	48/47	285	50/49	60/60	52/52	289	51/50	60/60	53/53	290	54/54	60/60	58/57	294
		MED	50	60	52	314	53	60	56	318	54	60	57	319	58	70	62	323
		HIGH	53/52	60/60	55/54	316	56/55	60/60	60/59	320	57/56	70/60	61/60	321	61/60	70/70	65/64	325
	460–3–60	STD	23	30	23	136	25	30	26	138	25	30	26	138	27	30	28	140
		MED	25	30	26	151	26	30	28	153	27	30	28	153	29	35	30	155
		HIGH	26	30	27	152	28	30	29	154	28	30	29	154	30	35	32	156
	575–3–60	STD	17	20	17	93	20	25	21	97	18	20	19	95	22	25	23	99
		MED	17	20	18	104	21	25	22	108	19	25	20	106	23	25	24	110
		HIGH	20	25	21	118	24	30	25	122	22	25	23	120	26	30	27	124

See “Legend and Notes for Tables 13 and 14” on page 44.

Table 13 – Unit Wire/Fuse or HACR Breaker Sizing Data - Single Speed Indoor Fan Motor (cont)

UNIT	NOM.V–Ph–Hz	IFM TYPE	NO C.O. or UNPWR C.O.								w/ PWRD C.O.							
			NO P.E.				w/ P.E. (pwrd fr/ unit)				NO P.E.				w/ P.E. (pwrd fr/ unit)			
			MCA	FUSE or HACR BRKR	DISC. SIZE		MCA	FUSE or HACR BRKR	DISC. SIZE		MCA	FUSE or HACR BRKR	DISC. SIZE		MCA	FUSE or HACR BRKR	DISC. SIZE	
					FLA	LRA			FLA	LRA			FLA	LRA			FLA	LRA
48TC*D14 (2–stage cool) Units built on or after 02/16/2015	208/230–3–60	STD	63/63	80/80	65/65	389	66/66	80/80	69/69	393	67/67	80/80	71/70	394	71/71	80/80	75/75	398
		MED	65	80	68	403	69	80	72	407	70	80	73	408	73	80	78	412
		HIGH	68/67	80/80	71/70	405	72/71	80/80	75/74	409	–	–	–	–	–	–	–	–
	460–3–60	STD	29	35	30	193	31	40	32	195	31	40	33	195	33	40	35	197
		MED	30	40	31	200	32	40	33	202	33	40	34	202	34	40	36	204
		HIGH	31	40	33	201	33	40	35	203	34	40	35	203	35	45	37	205
	575–3–60	STD	22	25	23	147	26	30	27	151	24	30	24	149	27	30	29	153
		MED	22	25	23	147	26	30	27	151	24	30	24	149	27	30	29	153
		HIGH	25	30	26	161	29	35	30	165	26	30	28	163	30	35	32	167
48TC*D14 (2–stage cool) Units built on or prior to 02/15/2015	208/230–3–60	STD	62/62	80/80	64/64	376	66/66	80/80	69/69	380	67/67	80/80	70/70	381	71/71	80/80	74/74	385
		MED	64	80	67	390	68	80	71	394	69	80	72	395	73	80	77	399
		HIGH	67/66	80/80	70/69	392	71/70	80/80	75/74	396	–	–	–	–	–	–	–	–
	460–3–60	STD	31	40	32	189	33	40	34	191	33	40	34	191	35	40	36	193
		MED	32	40	33	196	34	40	35	198	34	40	36	198	36	45	38	200
		HIGH	33	40	34	197	35	40	36	199	35	45	37	199	37	45	39	201
	575–3–60	STD	23	30	23	142	27	30	28	146	24	30	25	144	28	30	30	148
		MED	23	30	23	142	27	30	28	146	24	30	25	144	28	30	30	148
		HIGH	26	30	27	156	29	35	31	160	27	30	29	158	31	35	33	162

See “Legend and Notes for Tables 13 and 14” on page 44.

Table 14 – Unit Wire/Fuse or HACR Breaker Sizing Data - 2-Speed Indoor Fan Motor

UNIT	NOM.V–Ph–Hz	IFM TYPE	NO C.O. or UNPWR C.O.								w/ PWRD C.O.							
			NO P.E.				w/ P.E. (pwrd fr/ unit)				NO P.E.				w/ P.E. (pwrd fr/ unit)			
			MCA	FUSE or HACR BRKR	DISC. SIZE		MCA	FUSE or HACR BRKR	DISC. SIZE		MCA	FUSE or HACR BRKR	DISC. SIZE		MCA	FUSE or HACR BRKR	DISC. SIZE	
					FLA	LRA			FLA	LRA			FLA	LRA			FLA	LRA
48TC*D08 (2–stage cool)	208/230–3–60	STD	40/40	50/50	41/41	197	44/43	50/50	46/46	201	45/44	50/50	47/47	202	48/48	60/60	51/51	206
		MED	43/42	50/50	45/44	227	46/46	50/50	49/48	231	47/47	60/50	50/49	232	51/50	60/60	55/54	236
		HIGH	48/47	60/50	50/49	262	51/51	60/60	55/54	266	52/52	60/60	56/55	267	56/55	60/60	60/59	271
	460–3–60	STD	19	20	19	97	20	25	21	99	21	25	22	99	23	25	24	101
		MED	20	25	20	113	21	25	22	115	22	25	23	115	24	25	25	117
		HIGH	22	25	23	130	24	30	25	132	24	30	26	132	26	30	28	134
	575–3–60	STD	14	15	14	79	18	20	19	83	16	20	16	81	19	25	21	85
		MED	16	20	16	92	19	25	21	96	17	20	18	94	21	25	23	98
		HIGH	18	20	18	106	22	25	23	110	20	25	20	108	23	25	24	112
48TC*D09 (2–stage cool)	208/230–3–60	STD	41/41	50/50	43/42	212	45/45	50/50	47/47	216	46/46	50/50	48/48	217	50/49	60/60	52/52	221
		MED	42/42	50/50	44/44	216	46/46	60/50	48/48	220	47/47	60/60	50/49	221	51/51	60/60	54/54	225
		HIGH	46/45	60/50	48/47	266	50/49	60/60	53/52	270	51/50	60/60	54/53	271	55/54	60/60	58/57	275
	460–3–60	STD	19	25	20	111	21	25	22	113	21	25	22	113	23	25	24	115
		MED	20	25	21	114	22	25	23	116	22	25	23	116	24	30	25	118
		HIGH	21	25	22	139	23	25	24	141	23	25	24	141	25	30	26	143
	575–3–60	STD	17	20	17	87	21	25	21	91	18	20	19	89	22	25	23	93
		MED	17	20	18	91	21	25	22	95	19	25	20	93	23	25	24	97
		HIGH	18	20	19	100	22	25	23	104	20	25	21	102	24	30	25	106
48TC*D12 (2–stage cool)	208/230–3–60	STD	46/46	60/60	48/47	255	50/50	60/60	52/52	259	51/51	60/60	53/53	260	55/54	60/60	58/57	264
		MED	50/49	60/60	52/51	305	54/53	60/60	56/55	309	55/54	60/60	58/56	310	58/57	70/70	62/61	314
		HIGH	53/52	60/60	55/54	316	56/55	60/60	60/59	320	57/56	70/60	61/60	321	61/60	70/70	65/64	325
	460–3–60	STD	23	30	24	122	25	30	26	124	25	30	26	124	27	30	29	126
		MED	24	30	25	147	26	30	27	149	26	30	28	149	28	30	30	151
		HIGH	26	30	27	152	28	30	29	154	28	30	29	154	30	35	32	156
	575–3–60	STD	18	20	19	95	22	25	23	99	20	25	21	97	24	25	25	101
		MED	19	25	20	104	23	25	24	108	21	25	22	106	25	30	26	110
		HIGH	21	25	22	118	25	30	26	122	23	25	24	120	26	30	28	124

See “Legend and Notes for Tables 13 and 14” on page 44.

Table 14 – Unit Wire/Fuse or HACR Breaker Sizing Data - 2-Speed Indoor Fan Motor (cont)

UNIT	NOM.V–Ph–Hz	IFM TYPE	NO C.O. or UNPWR C.O.								w/ PWRD C.O.							
			NO P.E.				w/ P.E. (pwrd fr/ unit)				NO P.E.				w/ P.E. (pwrd fr/ unit)			
			MCA	FUSE or HACR BRKR	DISC. SIZE		MCA	FUSE or HACR BRKR	DISC. SIZE		MCA	FUSE or HACR BRKR	DISC. SIZE		MCA	FUSE or HACR BRKR	DISC. SIZE	
					FLA	LRA			FLA	LRA			FLA	LRA			FLA	LRA
48TC*D14 (2–stage cool) Units built on or after 02/16/2015	208/230–3–60	STD	63/62	80/80	65/64	370	67/66	80/80	70/69	374	68/67	80/80	71/70	375	71/71	80/80	75/74	379
		MED	65/64	80/80	68/67	394	69/68	80/80	72/71	398	70/69	80/80	73/72	399	74/73	80/80	78/77	403
		HIGH	68/67	80/80	71/70	405	72/71	80/80	75/74	409	–	–	–	–	–	–	–	–
	460–3–60	STD	29	35	30	184	31	40	32	186	31	40	32	186	33	40	34	188
		MED	30	40	31	196	32	40	33	198	32	40	33	198	34	40	35	200
		HIGH	31	40	33	201	33	40	35	203	34	40	35	203	35	45	37	205
	575–3–60	STD	24	30	24	147	27	30	29	151	25	30	26	149	29	35	31	153
		MED	24	30	24	147	27	30	29	151	25	30	26	149	29	35	31	153
		HIGH	25	30	26	161	29	35	31	165	27	30	28	163	31	35	33	167
48TC*D14 (2–stage cool) Units built on or prior to 02/15/2015	208/230–3–60	STD	62/61	80/80	65/64	357	66/65	80/80	69/68	361	67/66	80/80	70/69	362	71/70	80/80	75/74	366
		MED	64/63	80/80	67/66	381	68/67	80/80	72/70	385	69/68	80/80	73/72	386	73/72	80/80	77/76	390
		HIGH	67/66	80/80	70/69	392	71/70	80/80	75/74	396	–	–	–	–	–	–	–	–
	460–3–60	STD	30	40	31	180	32	40	33	182	33	40	34	182	34	40	36	184
		MED	31	40	33	192	33	40	35	194	34	40	35	194	35	45	37	196
		HIGH	33	40	34	197	35	40	36	199	35	45	37	199	37	45	39	201
	575–3–60	STD	24	30	25	142	28	30	30	146	26	30	27	144	30	35	32	148
		MED	24	30	25	142	28	30	30	146	26	30	27	144	30	35	32	148
		HIGH	26	30	27	156	30	35	32	160	28	30	29	158	32	35	34	162

See “Legend and Notes for Tables 13 and 14” on page 44.

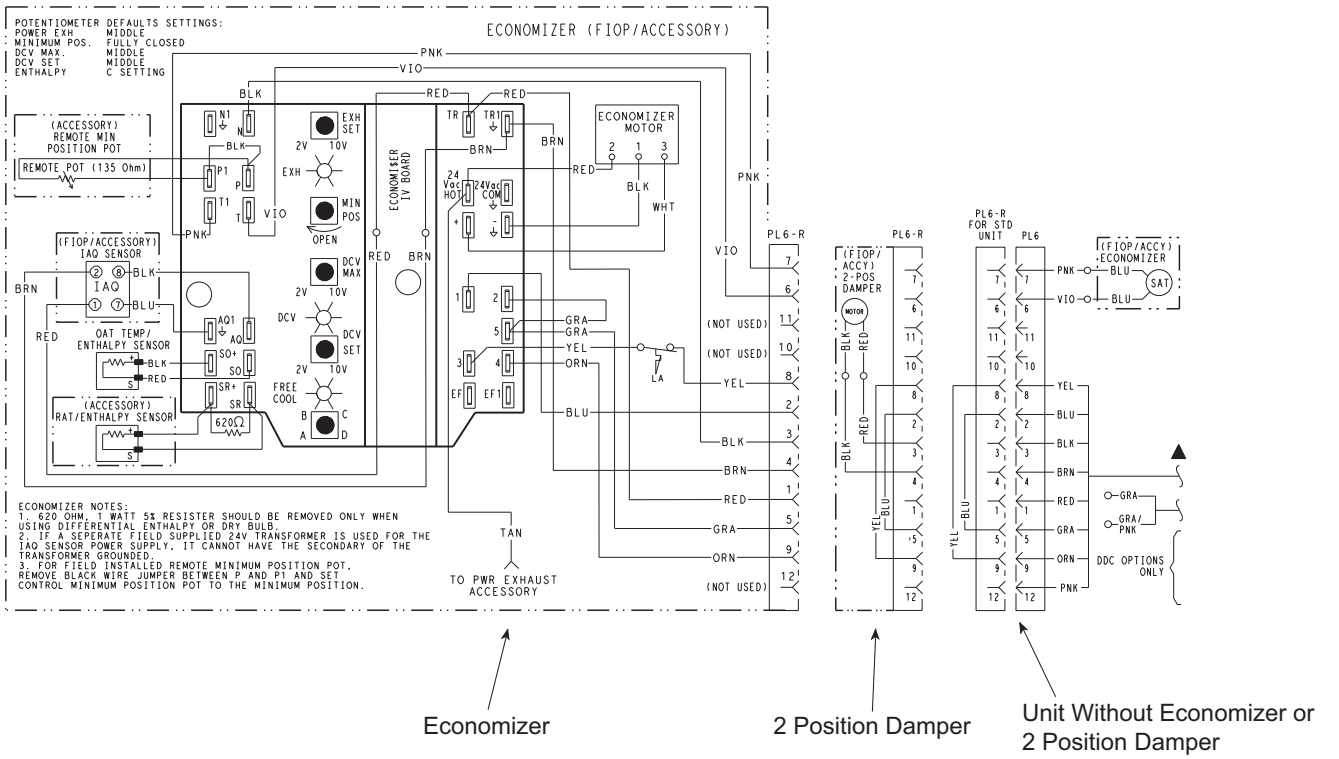

Fig. 77 - EconoMi$er IV Wiring

Step 13 — Adjust Factory-Installed Options

Smoke Detectors —

Smoke detector(s) will be connected at the Controls Connections Board, at terminals marked "Smoke Shutdown". Cut jumper JMP 3 when ready to energize unit.

EconoMi$er IV Occupancy Switch —

Refer to Fig. 77 for general EconoMi$er IV wiring. External occupancy control is managed through a connection on the Controls Connections Board.

If external occupancy control is desired, connect a time clock or remotely controlled switch (closed for Occupied, open for Unoccupied sequence) at terminals marked OCCUPANCY. Cut jumper JMP 2 to complete the installation.

Step 14 — Install Accessories

Available accessories include:

- Roof Curb
- Thru-base connection kit (must be installed before unit is set on curb)
- LP conversion kit
- Manual outside air damper
- High Altitude Gas kits
- Flue Discharge Deflector
- Flue Exhaust Heat Shield
- Low Ambient Controls
- Thermostat / Sensors
- Two-Position motorized outside air damper
- EconoMi$er2 (without control/for external signal and integrated barometric relief)
- EconoMi$er2 (without control/for external signal)
- Power Exhaust
- Differential dry-bulb sensor (EconoMi$er IV)
- Outdoor enthalpy sensor
- Differential enthalpy sensor
- CO_2 sensor
- DDC interface (PremierLink)
- Louvered hail guard
- Phase monitor control
- Winter Start kit

Refer to separate installation instructions for information on installing these accessories.

Pre-Start and Start-Up —

This completes the mechanical installation of the unit. Refer to the unit's Service Manual for detailed Pre-Start and Start-Up instructions. Download the latest versions from HVAC Partners (www.hvacpartners.com).

Copyright 2015 Carrier Corp. • 7310 W. Morris St. • Indianapolis, IN 46231
Edition Date: 01/15
Catalog No:48TC-8-14-01SI
Manufacturer reserves the right to change, at any time, specifications and designs without notice and without obligations.
Replaces: 48TC-02SI & 48TC-07SI

UNIT START-UP CHECKLIST
(Remove and Store in Job File)

MODEL NO.: _____ SERIAL NO.: _____

I. PRE-START-UP

☐ VERIFY THAT ALL PACKAGING MATERIALS HAVE BEEN REMOVED FROM UNIT

☐ VERIFY INSTALLATION OF OUTDOOR AIR HOOD

☐ VERIFY INSTALLATION OF FLUE EXHAUST AND INLET HOOD

☐ VERIFY THAT CONDENSATE CONNECTION IS INSTALLED PER INSTRUCTIONS

☐ VERIFY THAT ALL ELECTRICAL CONNECTIONS AND TERMINALS ARE TIGHT

☐ VERIFY GAS PRESSURE TO UNIT GAS VALVE IS WITHIN SPECIFIED RANGE

☐ CHECK GAS PIPING FOR LEAKS

☐ CHECK THAT INDOOR-AIR FILTERS ARE CLEAN AND IN PLACE

☐ CHECK THAT OUTDOOR AIR INLET SCREENS ARE IN PLACE

☐ VERIFY THAT UNIT IS LEVEL

☐ CHECK FAN WHEELS AND PROPELLER FOR LOCATION IN HOUSING/ORIFICE AND VERIFY SETSCREW IS TIGHT

☐ VERIFY THAT FAN SHEAVES ARE ALIGNED AND BELTS ARE PROPERLY TENSIONED

☐ VERIFY THAT SCROLL COMPRESSORS ARE ROTATING IN THE CORRRECT DIRECTION

☐ VERIFY INSTALLATION OF THERMOSTAT

☐ VERIFY THAT CRAKCASE HEATERS HAVE BENN ENERGIZED FOR AT LEAST 24 HOURS

II. START-UP

ELECTRICAL

SUPPLY VOLTAGE	L1-L2	_____	L2-L3	_____	L3-L1	_____
COMPRESSOR AMPS 1	L1	_____	L2	_____	L3	_____
COMPRESSOR AMPS 2	L1	_____	L2	_____	L3	_____
SUPPLY FAN AMPS	L1	_____	L2	_____	L3	_____

TEMPERATURES

OUTDOOR-AIR TEMPERATURE _____ °F DB (DRY BULB)

RETURN-AIR TEMPERATURE _____ °F DB _____ °F WB (WET BULB)

COOLING SUPPLY AIR TEMPERATURE _____ °F

GAS HEAT SUPPLY AIR _____ °F

PRESSURES

GAS INLET PRESSURE		_____	IN. WG
GAS MANIFOLD PRESSURE	STAGE 1	_____	IN. WG
	STAGE 2	_____	IN. WG
REFRIGERANT SUCTION	CIRCUIT A	_____	PSIG
	CIRCUIT B	_____	PSIG
REFRIGERANT DISCHARGE	CIRCUIT A	_____	PSIG
	CIRCUIT B	_____	PSIG

☐ VERIFY REFRIGERANT CHARGE USING CHARGING CHARTS

GENERAL

☐ ECONOMIZER MINIMUM VENT AND CHANGEOVER SETTINGS TO JOB REQUIREMENTS (IF EQUIPPED)

☐ VERIFY SMOKE DETECTOR UNIT SHUTDOWN BY UTILIZING MAGNET TEST

III. HUMIDIMIZER START-UP

STEPS

☐ 1. CHECK CTB FOR JUMPER 5, 6, 7
JUMPER 5, 6, 7 MUST BE CUT AND OPEN

☐ 2. OPEN HUMIDISTAT CONTACTS

☐ 3. START UNIT IN COOLING (CLOSE Y1)

OBSERVE AND RECORD

A. SUCTION PRESSURE _____ PSIG

B. DISCHARGE PRESSURE _____ PSIG

C. ENTERING AIR TEMPERATURE _____ °F

D. LIQUID LINE TEMPERATURE AT OUTLET OR REHEAT COIL _____ °F

E. CONFRIM CORRECT ROTATION FOR COMPRESSOR

F. CHECK FOR CORRECT RAMP-UP OF OJUTDOOR FAN MOTOR AS CONDENSER COIL WARMS

☐ 4. CHECK UNIT CHARGE PER CHARGING CHART

☐ 5. SWITCH UNIT TO HIGH-LATENT MODE (SUBCOOLER) BY CLOSING HUMIDISTAT WITH Y1 CLOSED

OBSERVE

☐ A. REDUCTION IN SUCTION PRESSURE (5 TO 7 PSI EXPECTED)

☐ B. DISCHARGE PRESSURE UNCHANGED

☐ C. LIQUID TEMPERATURE DROPS TO 50 TO 55°F RANGE

☐ D. LSV SOLENOID ENGERIZED (VALVE CLOSES)

☐ 6. SWITCH UNIT TO DEHUMID (REHEAT) BY OPENING Y1

OBSERVE

☐ A. SUCTION PRESSURE INCREASES TO NORMAL COOLING LEVEL

☐ B. DISCHARGE PRESSURE DECREASES (35 TO 50 PSI)

☐ C. LIQUID TEMPERATURE RETURNS TO NORMAL COOLNG LEVEL

☐ D. LSV SOLENOID ENERGIZED (VALVE CLOSES)

☐ E. DSV SOLENOID ENERGIZED, VALVE OPENS

☐ 7. WITH UNIT IN DEHUMID MODE CLOSE W1
COMPRESSOR AND OUTDOOR FAN STOP; LSV AND DSV SOLENOIDS DE-ENERGIZED

☐ 8. OPEN W1 RESTORE UNIT TO DEHUMID MODE

☐ 9. OPEN HUMIDISTAT INPUT
COMPRESSOR AND OUTDOOR FAN STOP; LSV AND DSV SOLENOIDS DE-ENERGIZED

☐ 10. RESTORE SETPOINTS FOR THERMOSTAT AND HUMIDISTAT

REPEAT PROCESS FOR 2 COMPRESSOR SYSTEMS

Copyright 2015 Carrier Corp. • 7310 W. Morris St. • Indianapolis, IN 46231
Edition Date: 01/15
Catalog No:48TC–8–14–01SI

Manufacturer reserves the right to change, at any time, specifications and designs without notice and without obligations.
Replaces: 48TC–02SI & 48TC–07SI