50TC
Cooling Only/Electric Heat Packaged Rooftop 15 to 27.5 Nominal Tons

Carrier
turn to the experts™

Product Data

WeatherMaker®

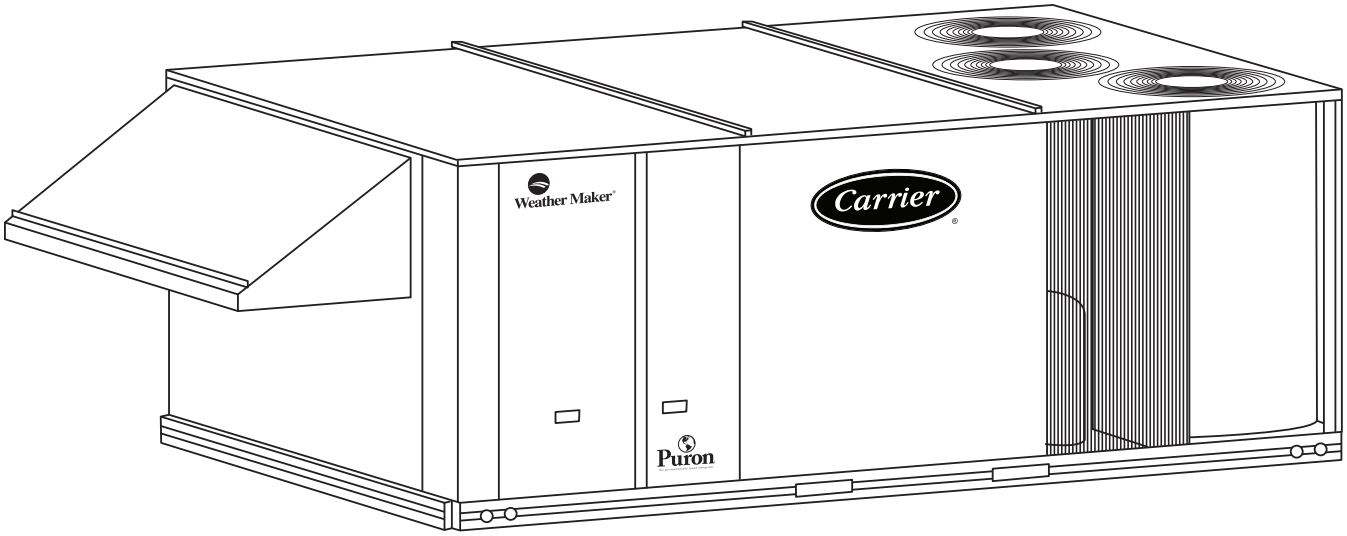

C09262

(Unit shown with optional economizer.)

ETL LISTED C US

AHRI CERTIFIED™ www.ahridirectory.org

Use of the AHRI Certified TM Mark indicates a manufacturer's participation in the program For verification of certification for individual products, go to www.ahridirectory.org.

Puron™ the environmentally sound refrigerant

ASHRAE 90.1 COMPLIANT

TABLE OF CONTENTS

	PAGE
FEATURES AND BENEFITS	3
MODEL NUMBER NOMENCLATURE	4
FACTORY OPTIONS & ACCESSORIES	6
AHRI RATING TABLE	8
SOUND PERFORMANCE	8
PHYSICAL DATA	9
ELECTRIC HEAT DATA	13
DIMENSIONS	16
OPTIONS & ACCESSORIES WGT ADDERS	22
APPLICATION/SELECTION DATA	23
COOLING CAPACITIES	24
STATIC PRESSURE ADDERS	32
DAMPER, BAROMETRIC RELIEF & PE PERF	34
FAN PERFORMANCE	29
ELECTRICAL INFO	35
MCA / MOCP	37
TYPICAL WIRING DIAGRAM	52
SEQUENCE OF OPERATION	59
GUIDE SPECIFICATIONS	62

Carrier
turn to the experts

The new 15 to 27.5 ton WeatherMaker Carrier rooftop unit (RTU) was designed by customers for customers. With a newly designed cabinet that integrates “no-strip” screw collars, handled access panels, and more, we’ve made your unit easy to install, easy to maintain and easy to use and reliable.

Easy to install:

These new WeatherMaker units are designed for dedicated factory supplied vertical or horizontal air flow duct configurations. No special field kits are required. Designed to fit on pre-installed curbs by other another manufacturer, these units also fit on past designed Carrier installed curbs with a new certified and authorized adapter curb. This new cabinet design also integrates a large control box that gives you room to work and room to mount Carrier accessory controls.

Easy to maintain:

Easy access handles by Carrier provide quick and easy access to all major, normally serviced components. Our “no-strip” screw system has superior holding power and guides screws into position while preventing the screw from stripping the unit’s metal. Take accurate pressure readings by reading condenser pressure with panels in place as compressors are strategically located to eliminate any air bypass.

Easy to use:

The newly designed, master terminal board by Carrier puts all your connections and troubleshooting points in one convenient place, standard. Most low voltage connections are made to the same board and make it easy to find what you’re looking for and easy to access it. Carrier rooftops have high and low pressure switches, a filter drier, and 2-in (51mm) filters standard.

Reliable:

Each unit comes with precision sized and tested scroll compressor that is internally protected from over temperature and pressures. In addition, each refrigerant circuit is further protected with a high pressure and low pressure switch as well as containing a liquid line filter drier. Each unit is factory tested prior to shipment to help ensure units operation once properly installed.

Carrier Comfort System
PremierLink

FEATURES AND BENEFITS

- Two stage cooling capacity with independent circuits and control.
- Round tube/plate fin (RTPF) available on all sizes or NOVATION all aluminum condenser (outdoor) coils available on 17-28 sizes only. Special coil-coating also available for coastal and industrial environments
- EER's up to 11.0.
- IEER's up to 11.8.
- Dedicated vertical and horizontal air flow duct configuration models. No field kits required.
- Utility connections through the side or bottom. Bottom connections are also in an enclosed environment to help prevent water entry.
- Standardized components and control box layout. Standardized components and controls make stocking parts and service easier.
- Scroll compressors on all units. This makes service, stocking parts, replacement, and trouble-shooting easier.
- Proven Acutrol refrigerant metering system.
- Easy-adjust, belt-drive motor available. Carrier provides a factory solution for most points in the fan performance table. Motor assembly also contains a fan belt break protection system on all models and reliable pillow block bearing system that allows lubrication thru front of the unit.
- Capable of thru-the-base or thru-the-curb electrical routing.
- Full range of electric heaters and single point electric kits – pre engineered and approved for field installation.
- Single-point electrical connection.
- Sloped, composite drain pan sheds water; and won't rust.
- Standardized controls and control box layout. Standardized components and controls make stocking parts and service easier.
- Clean, easy to use control box.
- Color-coded wiring.
- Large, laminated wiring and power wiring drawings which are affixed to unit make troubleshooting easy.
- Single, central terminal board for test and wiring connections.
- Fast-access, handled, panels for easy access on normally accessed service panels.
- "No-strip" screw system guides screws into the panel and captures them tightly without stripping the screw, the panel, or the unit.
- Mechanical cooling (115°F to 30°F / 46°C to -1°C) standard on all models. Low ambient controller allows operation down to -20°F / -29°C.
- 2-in (51mm) disposable filters on all units, with 4-in (102mm) filter track - field installed.
- Refrigerant filter-drier on each circuit.
- High and low pressure switches. Added reliability with high pressure switch and low pressure switch.
- Many factory-installed options ranging from air management economizers, 2 position dampers, manual outdoor air dampers, plus convenience outlets, disconnect switch and smoke detectors.
- Factory-installed Humidi-MiZer® adaptive dehumidification system. Available on 17-28 sizes with RTPF condenser coil models only.
- Standard Parts Warranty: 10 year aluminized heat exchanger, 5 year compressor, 3 year NOVATION™ condenser coil, 1 year others.

MODEL NUMBER NOMENCLATURE

1	2	3	4	5	6	7	8	9	10	11	12	13	14	15	16	17	18
5	0	T	C	–	D	2	4	A	1	G	6	–	0	A	0	A	0

Unit Heat Type
50 = Elect. Heat Pkg. Rooftop

Tier/Model
TC = Standard Efficiency

Heat Size
– = No Heat

Refrig. System Options
D = 2–stage cooling
E = 2–stg Cool w/Humidi–MiZer (RTPF 17–28)

Cooling Tons
17 = 15 Ton
20 = 17.5 Ton
24 = 20 Ton
28 = 25 Ton
30 = 27.5 Ton

Sensor Options
A = None
B = RA Smoke Detector
C = SA Smoke Detector
D = RA + SA Smoke Detector
E = CO_2
F = RA Smoke Detector & CO_2
G = SA Smoke Detector & CO_2
H = RA + SA Smoke Detector & CO_2

Indoor Fan Options
1 = Standard Static Option, Vertical
2 = Medium Static Option, Vertical
3 = High Static Option, Vertical
B = Medium Static High Eff Motor/Vertical Supply,Return Air Flow
C = High Static High Eff Motor/Vertical Supply,Return Air Flow

5 = Standard Static Option, Horizontal
6 = Medium Static Option, Horizontal
7 = High Static Option, Horizontal
F = Medium Static High Eff Motor/Horz Supply,Return Air Flow
G = High Static High Eff Motor/Horz Supply,Return Air Flow

Coil Options–Novation Coils Only (Outdoor–Indoor–Hail Guard)
G = Al/Al – Al/Cu
H = Al/Al – Cu/Cu
J = Al/Al – E–coat Al/Cu
K = Al/Al E–coat – Al/Cu
L = Al/Al E–coat – Al/Cu E–coat
T = Al/Al – Al/Cu – Louvered
U = Al/Al – Cu/Cu – Louvered
V = Al/Al – E–coat Al/Cu, Louvered
W = Al/Al E–coat – Al/Cu, Louvered
X = Al/Al E–coat – Al/Cu E–coat, Louvered

Round Tube Plate Fin (RTPF) (Outdoor–Indoor–Hail Guard)
A = Al/Cu – Al/Cu
B = Pre–coat Al/Cu – Al/Cu
C = E–coat Al/Cu – Al/Cu
D = E–coat Al/Cu – E–coat Al/Cu
E = Cu/Cu – Al/Cu
F = Cu/Cu – Cu/Cu
M = Al/Cu – Al/Cu – Louvered Hail Guard
N = Pre–coat Al/Cu – Al/Cu – Louvered Hail Guard
P = E–coat Al/Cu – Al/Cu – Louvered Hail Guard
Q = E–coat Al/Cu – E–coat Al/Cu – Louvered Hail Guard
R = Cu/Cu – Al/Cu – Louvered Hail Guard
S = Cu/Cu – Cu/Cu – Louvered Hail Guard

Voltage
1 = 575/3/60
5 = 208–230/3/60
6 = 460/3/60

Design Rev
– = Factory Assigned

Base Unit Controls
0 = Electromechanical
1 = PremierLink Controller
2 = RTU Open Protocol Controller

Intake / Exhaust Options
A = None
B = Temp Econo w/ Baro Relief
D = Temp Econo w/ PE (cent)
F = Enthalpy Econo w/ Baro Relief
H = Enthalpy Econo w/PE (cent)
K = 2 Position Damper
P = Manual Outdoor Air Damper

Service Options
0 = None
1 = Unpowered C.O.
2 = Powered C.O.

Electrical Options
A = None
C = Non–Fused Disconnect
D = Thru The Base
F = Non–Fused Disc/Thru The Base

Packaging Options
0 = Standard
3 = Cal. Seismic Compliant (17–28 sizes)

Table 1 – FACTORY-INSTALLED OPTIONS AND FIELD-INSTALLED ACCESSORIES

CATEGORY	ITEM	FACTORY INSTALLED OPTION	FIELD INSTALLED ACCESSORY
Cabinet	Dedicated Vertical Air Flow Duct Configuration	X	
	Dedicated Horizontal Air Flow Duct Configuration	X	
	Thru–the–base electrical connections	X	
	California Seismic Compliant Labeling (17–28 sizes only)	X	
Coil Options	Cu/Cu (indoor) coils	X	
	E–coated indoor & outdoor coils	X	
Humidity Control	Humidi–MiZer Adapt. Dehumidification System (17–28 RTPF)	X	
Condenser Protection	Condenser coil hail guard (louvered design)	X	X
Controls	Thermostats, temperature sensors, and subbases		X
	PremierLink™ DDC communicating controller	X	X
	RTU Open protocol controller	X	
	Smoke detector (supply and/or return air)	X	X
	Time Guard II compressor delay control circuit		X
	Phase Monitor		X
Economizers & Outdoor Air Dampers	EconoMi$er IV (for electro–mechanical controlled RTUs)	X	X
	EconoMi$er2 (for DDC controlled RTUs)	X	X
	Motorized 2 position outdoor–air damper	X	X
	Manual outdoor–air damper (25%)		X
	Barometric relief[1]	X	X
	Barometric hood (Horizontal economizer)		X
	Power exhaust	X	X
Economizer Sensors & IAQ Devices	Single dry bulb temperature sensors[2]	X	X
	Differential dry bulb temperature sensors[2]		X
	Single enthalpy sensors[2]	X	X
	Differential enthalpy sensors[2]		X
	CO_2 sensor (wall, duct, or unit mounted)[3]	X	X
Electric Heat	Electric Resistance Heaters		X
	Single Point Kit		X
Indoor Motor & Drive	Multiple motor and drive packages	X	
Low Ambient Control	Winter start kit[3]		X
	Motormaster head pressure controller[3]		X
Power Options	Convenience outlet (powered)	X	
	Convenience outlet (unpowered)	X	
	Non–fused disconnect[4]	X	
Roof Curbs	Roof curb 14–in (356mm)		X
	Roof curb 24–in (610mm)		X
	Adapter Curb (Adapts to Models – DP/DR/HJ/TM/TJ)[5] (17–28)		X

NOTES:
1. Included with economizer.
2. Sensors for optimizing economizer.
3. See application data for assistance.
4. Non–fused disconnect switch cannot be used when MOCP electrical rating exceeds 70 amps at 460/575 volt and 150 amps at 208/230 volt. Carrier RTUBuilder selects this automatically.
5. Not for 48TJE028–028 models using 48DP900041, 48DP900051 or 48DP900061 roofcurbs.

FACTORY OPTIONS AND/OR ACCESSORIES

Economizer (dry-bulb or enthalpy)

Economizers save money. They bring in fresh, outside air for ventilation; and provide cool, outside air to cool your building. This is the preferred method of low-ambient cooling. When coupled to CO_2 sensors, Economizers can provide even more savings by coupling the ventilation air to only that amount required.

Economizers are available, installed and tested by the factory, with either enthalpy or dry-bulb temperature inputs. There are also models for electromechanical as well as direct digital controllers. Additional sensors are available as accessories to optimize the economizers.

Economizers include gravity controlled, barometric relief equalizes building pressure and ambient air pressures. This can be a cast effective solution to prevent building pressurization. If further control of exhaust air is required, a dual centrifugal fan power exhaust system is also available.

CO_2 Sensor

Improves productivity and saves money by working with the economizer to intake only the correct amount of outside air for ventilation. As occupants fill your building, the CO_2 sensor detects their presence through increasing CO_2 levels, and opens the economizer appropriately.

When the occupants leave, the CO_2 levels decrease, and the sensor appropriately closes the economizer. This intelligent control of the ventilation air, called Demand Control Ventilation (DCV) reduces the overall load on the rooftop, saving money.

Smoke Detectors

Trust the experts. Smoke detectors make your application safer and your job easier. Carrier smoke detectors immediately shut down the rooftop unit when smoke is detected. They are available, installed by the factory, for supply air, return air, or both.

Louvered Hail Guards

Sleek, louvered panels protect the condenser coil from hail damage, foreign objects, and incidental contact.

Convenience Outlet (powered or un-powered)

Reduce service and/or installation costs by including a convenience outlet in your specification. Carrier will install this service feature at our factory. Provides a convenient, 15 amp, 115v GFCI receptacle with “Wet in Use” cover. The “powered” option allows the installer to power the outlet from the line side of the disconnect as required by code. The “unpowered” option is to be powered from a separate 115/120v power source.

Non-Fused Disconnect

This OSHA-compliant, factory-installed, safety switch allows a service technician to locally secure power to the rooftop.

Power Exhaust with Barometric Relief

Superior internal building pressure control. This field-installed accessory or factory-installed option may eliminate the need for costly, external pressure control fans.

PremierLink™, DDC Controller

This CCN controller regulates your rooftop’s performance to tighter tolerances and expanded limits, as well as facilitates zoning systems and digital accessories. It also unites your Carrier HVAC equipment together on one, coherent CCN network. The PremierLink can be factory-installed, or easily field-installed.

RTU Open Protocol Controller

Connect the rooftop to an existing BAS without needing complicated translators or adapter modules using the RTU Open controller. This new controller speaks the 4 most common building automation system languages (Bacnet, Modbus, N2, and Lonworks). Use this controller when you have an existing BAS.

Time Guard II Control Circuit

This accessory protects your compressor by preventing short-cycling in the event of some other failure, prevents the compressor from restarting for 30 seconds after stopping. Not required with PremierLink®, RTU Open, or authorized commercial thermostats.

Filter or Fan Status Switches

Use these differential pressure switches to detect a filter clog or indoor fan motor failure. When used in conjunction with a compatible unit controller/thermostat, the switches will activate an alarm to warn the appropriate personnel.

Motorized 2-Position Damper

The new Carrier 2-position, motorized outdoor air damper admits up to 100% outside air. Using reliable, gear-driven technology, the 2-position damper opens to allow ventilation air and closes when the rooftop stops, stopping unwanted infiltration.

Manual OA Damper

Manual outdoor air dampers are an economical way to bring in ventilation air. The dampers are available in 25% versions.

Optional Humidi-MiZer Adaptive Dehumidification System

Carrier's Humidi-MiZer adaptive dehumidification system is an all-inclusive factory installed option that can be ordered with any WeatherMaker 50TC17-28 rooftop unit.

This system expands the envelope of operation of Carrier's WeatherMaker rooftop products to provide unprecedented flexibility to meet year round comfort conditions.

The Humidi-MiZer adaptive dehumidification system has the industry's only dual dehumidification mode setting. The Humidi-MiZer system includes two new modes of operation.

The WeatherMaker 50TC17-28 rooftop coupled with the Humidi-MiZer system is capable of operating in normal design cooling mode, subcooling mode, and hot gas reheat mode. Normal design cooling mode is when the unit will operate under its normal sequence of operation by cycling compressors to maintain comfort conditions.

Subcooling mode will operate to satisfy part load type conditions when the space requires combined sensible and a higher proportion of latent load control. Hot Gas Reheat mode will operate when outdoor temperatures diminish and the need for latent capacity is required for sole humidity control. Hot Gas Reheat mode will provide neutral air for maximum dehumidification operation.

Motormaster Head Pressure Controller

The Motormaster motor controller is a low ambient, head pressure controller kit that is designed to maintain the unit's condenser head pressure during periods of low ambient cooling operation. This device should be used as an alternative to economizer free cooling not when economizer usage is either not appropriate or desired. The Motormaster will either cycle the outdoor-fan motors or operate them at reduced speed to maintain the unit operation, depending on the model.

Winter Start Kit

The winter start kit by Carrier extends the low ambient limit of your rooftop to 25°F (-4°C). The kit bypasses the low pressure switch, preventing nuisance tripping of the low pressure switch. Other low ambient precautions may still be prudent.

Alternate Motors and Drives

Some applications need larger horsepower motors, some need more airflow, and some need both. Regardless of the case, your Carrier expert has a factory installed combination to meet your application. A wide selection of motors and pulleys (drives) are available, factory installed, to handle nearly any application.

Thru-the-Base Connections

Thru-the-base connections, available as a factory option, are necessary to ensure proper connection and seal when routing wire and piping through the rooftop's basepan and curb. These couplings eliminate roof penetration and should be considered for main power lines, as well as control power.

Electric Heaters / Single Point Kit

Carrier offers a full-line of field-installed accessory heaters and single point kits when required. The heaters are very easy to use, install and are all pre-engineered and certified.

Barometric Hood

For Horizontal Economizer applications where relief damper is installed in duct work. This kit provides the needed protection.

California OSHPD Seismic Certification Label (17-28 sizes)

Units meet the seismic capacity requirements of the International Code Council Evaluation Service (ICC-ES) document AC156 (Acceptance Criteria for Seismic Qualification by Shake-Table Testing of Nonstructural Components and Systems) and per International Building Code (IBC 2009) at an SDS (g) value of 2.00 z/h=1.0, Ip=1.5 and certified by independent structural engineers. A certification label is applied to the unit that meets the CA OSHPD Special Seismic Certification pre-approval labeling requirements on the external chassis of the unit.

Table 2 – AHRI COOLING RATING TABLE 2-STAGE COOLING

UNIT	COOLING STAGES	NOM. CAPACITY (TONS)	NET COOLING CAPACITY (MBH)	TOTAL POWER (kW)	EER	IEER
17	2	15	192	17.5	11.0	11.8
20	2	17.5	207	18.8	11.0	11.8
24	2	20	242	24.2	10.0	10.8
28	2	25	280	28.0	10.0	10.6
30	2	30	330	31.7	10.4	10.6

LEGEND

AHRI – Air Conditioning, Heating and Refrigeration Institute
ASHRAE – American Society of Heating, Refrigerating and Air Conditioning, Inc.
EER – Energy Efficiency Ratio
IEER – Integrated Energy Efficiency Ratio

NOTES

1. Rated and certified under AHRI Standard 340/360, as appropriate.
2. Ratings are based on:
   Cooling Standard: 80°F (27°C) db, 67°F (19°C) wb indoor air temp and 95°F db outdoor air temp.
   IEER Standard: A measure that expresses cooling part–load EER efficiency for commercial unitary air conditioning and heat pump equipment on the basis of weighted operation at various load capacities.
3. All 50TC units comply with ASHRAE 90.1 Energy Standard for minimum EER and IEER requirements.
4. Where appropriate, 50TC units comply with US Energy Policy Act. Refer to state and local codes or visit the following website: http://bcap–energy. org to determine if compliance with this standard pertains to your state, territory, or municipality.

Table 3 – MINIMUM - MAXIMUM AIRFLOWS ELECTRIC HEAT

MODEL SIZE	NOMINAL kW	CFM	
		MINIMUM	MAXIMUM
17	25	4500	7500
	50		
	75		
20	25	5200	9000
	50		
	75		
24	25	6000	10,000
	50		
	75		
28	25	7000	12,500
	50		
	75		
30	25	8500	
	50		
	75		

Table 4 – SOUND PERFORMANCE TABLE

MODEL SIZE	COOLING STAGES	OUTDOOR SOUND (dB)									
		A–Wtg.	ARI 370 Rating	63	125	250	500	1000	2000	4000	8000
17	2	84.1	84	92.2	83.9	80.4	81.8	78.7	76.5	72.2	65.4
20	2	84.1	84	92.2	83.9	80.4	81.8	78.7	76.5	72.2	65.4
24	2	86.5	87	95.6	87.5	84.2	84.2	81.7	77.9	73.2	66.3
28	2	85.9	86	97.1	88.3	84.4	83.3	80.7	77.4	73.4	67.3
30	2	85.9	86	97.1	88.3	84.4	83.3	80.7	77.4	73.4	67.3

LEGEND

dB – Decibel

NOTES:

1. Outdoor sound data is measure in accordance with AHRI standard 270–2008.
2. Measurements are expressed in terms of sound power. Do not compare these values to sound pressure values because sound pressure accounts for specific environmental factors which do not match individual applications. Sound power values are independent of the environment and therefore more accurate.
3. A–weighted sound ratings filter out very high and very low frequencies, to better approximate the response of an “average” human ear. A–weighted measurements for Carrier units are taken in accordance with 270–2008.

Table 5 – PHYSICAL DATA (COOLING) 15-27.5 TONS Novation - All Aluminum Coil Design

	50TC*17	50TC*20	50TC*24	50TC*28
Refrigeration System				
# Circuits / # Comp. / Type	2 / 2 / Scroll	2 / 2 / Scroll	2 / 2 / Scroll	2 / 2 / Scroll
R–410a charge A/B (lbs)	9.5/12.0	9.5/12.0	14.4/12.5	12.5/13.0
Metering device	Acutrol	Acutrol	Acutrol	Acutrol
High–press. Trip / Reset (psig)	630 / 505	630 / 505	630 / 505	630 / 505
Low–press. Trip / Reset (psig)	54 / 117	54 / 117	54 / 117	54 / 117
Compressor Capacity Staging (%)	50 / 100	50 / 100	50 / 100	50 / 100
Evap. Coil				
Material	Cu / Al	Cu / Al	Cu / Al	Cu / Al
Tube Diameter	3/8–in	3/8–in	3/8–in	3/8–in
Rows / FPI	4 / 15	4 / 15	4 / 15	4 / 15
Total face area (ft2)	19.56	19.56	22.00	23.11
Condensate drain conn. size	3/4–in	3/4–in	3/4–in	3/4–in
Evap. fan and motor				
VERTICAL				
Standard Static				
Motor Qty / Drive type	1 / Belt	1 / Belt	1 / Belt	1 / Belt
Max BHP	2.2	3.3	4.9	4.9
RPM range	514–680	622–822	690–863	717–911
Motor frame size	56	56	56	56
Fan Qty / Type	2 / Centrifugal	2 / Centrifugal	2 / Centrifugal	2 / Centrifugal
Fan Diameter (in)	15 x 15	15 x 15	15 x 15	15 x 15
Medium Static				
Motor Qty / Drive type	1 / Belt	1 / Belt	1 / Belt	1 / Belt
Max BHP	3.3	4.9	6.5	6.5
RPM range	679–863	713–879	835–1021	913–1116
Motor frame size	56	56	184T	184T
Fan Qty / Type	2 / Centrifugal	2 / Centrifugal	2 / Centrifugal	2 / Centrifugal
Fan Diameter (in)	15 x 15	15 x 15	15 x 15	15 x 15
High Static				
Motor Qty / Drive type	1 / Belt	1 / Belt	1 / Belt	1 / Belt
Max BHP	4.9	6.5	8.7	8.7
RPM range	826–1009	882–1078	941–1176	941–1176
Motor frame size	56	184T	213T	213T
Fan Qty / Type	2 / Centrifugal	2 / Centrifugal	2 / Centrifugal	2 / Centrifugal
Fan Diameter (in)	15 x 15	15 x 15	15 x 15	15 x 15
Medium Static High Eff*				
Motor Qty / Drive type	n/a	n/a	1 / Belt	1 / Belt
Max BHP	n/a	n/a	6.5	6.5
RPM range	n/a	n/a	835–1021	913–1116
Motor frame size	n/a	n/a	184T	184T
Fan Qty / Type	n/a	n/a	2 / Centrifugal	2 / Centrifugal
Fan Diameter (in)	n/a	n/a	15 x 15	15 x 15
High Static High Eff*				
Motor Qty / Drive type	n/a	1 / Belt	1 / Belt	1 / Belt
Max BHP	n/a	6.5	8.7	8.7
RPM range	n/a	882–1078	941–1176	941–1176
Motor frame size	n/a	184T	213T	213T
Fan Qty / Type	n/a	2 / Centrifugal	2 / Centrifugal	2 / Centrifugal
Fan Diameter (in)	n/a	15 x 15	15 x 15	15 x 15

* Section 313 of the Energy Independence and Security Act of 2007 (EISA 2007) mandates that the efficiency of general purpose motors we use in our Light Commercial Rooftops rated at 5.0 HP and larger be increased on or after December 19, 2010. We will offer both high and standard efficient motors until inventory is depleted and then shift over solely to the high efficient motors only.

Table 5 - PHYSICAL DATA (con't) (COOLING) 15-27.5 TONS Novation - All Aluminum Coil Design

	50TC*17	50TC*20	50TC*24	50TC*28
HORIZONTAL				
Standard Static				
Motor Qty / Drive type	1 / Belt	1 / Belt	1 / Belt	1 / Belt
Max BHP	2.2	3.3	4.9	4.9
RPM range	514 – 680	622 – 822	690 – 863	647 – 791
Motor frame size	56	56	56	56
Fan Qty / Type	2 / Centrifugal	2 / Centrifugal	2 / Centrifugal	2 / Centrifugal
Fan Diameter (in)	18 x 15 & 15 X 11	18 x 15 & 15 X 11	18 x 15 & 15 X 11	18 x 15 & 15 X 11
Medium Static				
Motor Qty / Drive type	1 / Belt	1 / Belt	1 / Belt	1 / Belt
Max BHP	3.3	4.9	6.5	6.5
RPM range	614 – 780	713 – 879	835 – 1021	755 – 923
Motor frame size	56	56	184T	184T
Fan Qty / Type	2 / Centrifugal	2 / Centrifugal	2 / Centrifugal	2 / Centrifugal
Fan Diameter (in)	18 x 15 & 15 X 11	18 x 15 & 15 X 11	18 x 15 & 15 X 11	18 x 15 & 15 X 11
High Static				
Motor Qty / Drive type	1 / Belt	1 / Belt	1 / Belt	1 / Belt
Max BHP	4.9	6.5	8.7	8.7
RPM range	746 – 912	882 – 1078	941 – 1176	827 – 1010
Motor frame size	56	184T	213T	213T
Fan Qty / Type	2 / Centrifugal	2 / Centrifugal	2 / Centrifugal	2 / Centrifugal
Fan Diameter (in)	18 x 15 & 15 X 11	18 x 15 & 15 X 11	18 x 15 & 15 X 11	18 x 15 & 15 X 11
Medium Static High Eff*				
Motor Qty / Drive type	n/a	n/a	1 / Belt	1 / Belt
Max BHP	n/a	n/a	6.5	6.5
RPM range	n/a	n/a	835 – 1021	755 – 923
Motor frame size	n/a	n/a	184T	184T
Fan Qty / Type	n/a	n/a	2 / Centrifugal	2 / Centrifugal
Fan Diameter (in)	n/a	n/a	18 x 15/15 x 11	18 x 15/15 x 11
High Static High Eff*				
Motor Qty / Drive type	n/a	1 / Belt	1 / Belt	1 / Belt
Max BHP	n/a	6.5	8.7	8.7
RPM range	n/a	882 – 1078	941 – 1176	827 – 1010
Motor frame size	n/a	184T	213T	213T
Fan Qty / Type	n/a	2 / Centrifugal	2 / Centrifugal	2 / Centrifugal
Fan Diameter (in)	n/a	18 x 15/15 x 11	18 x 15/15 x 11	18 x 15/15 x 11
Cond. Coil (Circuit A)				
Coil type	Novation	Novation	Novation	Novation
Coil Length (in)	70	70	82	75
Coil Height (in)	44	44	44	52
Total face area (ft2)	21.4	21.4	25.1	27.1
Cond. Coil (Circuit B)				
Coil type	Novation	Novation	Novation	Novation
Coil Length (in)	70	70	57	75
Coil Height (in)	44	44	44	52
Total face area (ft2)	21.4	21.4	17.4	27.1
Cond. fan / motor				
Qty / Motor drive type	3 / direct	3 / direct	4 / direct	4 / direct
Motor HP / RPM	1/4 / 1100	1/4 / 1100	1/4 / 1100	1/4 / 1100
Fan diameter (in)	22	22	22	22
Filters				
RA Filter # / size (in)	6 / 20 x 25 x 2	6 / 20 x 25 x 2	6 / 20 x 25 x 2	9 / 16 x 25 x 2
OA inlet screen # / size (in)	4 / 16 x 25 x 1	4 / 16 x 25 x 1	4 / 16 x 25 x 1	4 / 16 x 25 x 1

* Section 313 of the Energy Independence and Security Act of 2007 (EISA 2007) mandates that the efficiency of general purpose motors we use in our Light Commercial Rooftops rated at 5.0 HP and larger be increased on or after December 19, 2010. We will offer both high and standard efficient motors until inventory is depleted and then shift over solely to the high efficient motors only.

Table 6 – PHYSICAL DATA (COOLING) 15-27.5 TONS RTPF-Round Tube/Plate Fin Coil Design

	50TC*17	50TC*20	50TC*24	50TC*28	50TC*D30
Refrigeration System					
# Circuits / # Comp. / Type	2 / 2 / Scroll	2 / 2 / Scroll	2 / 2 / Scroll	2 / 2 / Scroll	2 / 2 / Scroll
R–410a charge A/B (lbs)	16.3/17.5	9.5/12.0	20.6/14.7	19.8/20.4	27.0/ 28.5
Humidi–MiZer R–410a charge A/B (lbs)	25.9/25.7	25.9/25.7	27.9/20.5	27.9/28.9	n/a
Metering device	Acutrol	Acutrol	Acutrol	Acutrol	Acutrol
High–press. Trip / Reset (psig)	630 / 505	630 / 505	630 / 505	630 / 505	630 / 505
Low–press. Trip / Reset (psig)	54 / 117	54 / 117	54 / 117	54 / 117	54 / 117
Humidi–MiZer Low–press. Trip / Reset (psig)	27 / 44	27 / 44	27 / 44	27 / 44	n/a
Compressor Capacity Staging (%)	50 / 100	50 / 100	50 / 100	50 / 100	50 / 100
Evap. Coil					
Material	Cu / Al	Cu / Al	Cu / Al	Cu / Al	Cu / Al
Tube Diameter	3/8–in	3/8–in	3/8–in	3/8–in	3/8–in
Rows / FPI	4 / 15	4 / 15	4 / 15	4 / 15	4 / 15
Total face area (ft2)	22.00	22.00	22.00	23.11	26
Condensate drain conn. size	3/4–in	3/4–in	3/4–in	3/4–in	3/4–in
Humidi–MiZer Coil					
Material	Cu / Al	Cu / Al	Cu / Al	Cu / Al	n/a
Tube Diameter	3/8–in	3/8–in	3/8–in	3/8–in	n/a
Rows / FPI	1 / 17	1 / 17	1 / 17	1 / 17	n/a
Total face area (ft2)	22.00	22.00	22.00	23.11	n/a
Evap. fan and motor VERTICAL					
Standard Static — Motor Qty / Drive type	1 / Belt	1 / Belt	1 / Belt	1 / Belt	n/a
Max BHP	2.2	3.3	4.9	4.9	n/a
RPM range	514–680	622–822	690–863	717–911	n/a
Motor frame size	56	56	56	56	n/a
Fan Qty / Type	2 / Centrifugal	2 / Centrifugal	2 / Centrifugal	2 / Centrifugal	n/a
Fan Diameter (in)	15 x 15	15 x 15	15 x 15	15 x 15	n/a
Medium Static — Motor Qty / Drive type	1 / Belt	1 / Belt	1 / Belt	1 / Belt	n/a
Max BHP	3.3	4.9	6.5	6.5	n/a
RPM range	679–863	713–879	835–1021	913–1116	n/a
Motor frame size	56	56	184T	184T	n/a
Fan Qty / Type	2 / Centrifugal	2 / Centrifugal	2 / Centrifugal	2 / Centrifugal	n/a
Fan Diameter (in)	15 x 15	15 x 15	15 x 15	15 x 15	n/a
High Static — Motor Qty / Drive type	1 / Belt	1 / Belt	1 / Belt	1 / Belt	n/a
Max BHP	4.9	6.5	8.7	8.7	n/a
RPM range	826–1009	882–1078	941–1176	941–1176	n/a
Motor frame size	56	56	213T	213T	n/a
Fan Qty / Type	2 / Centrifugal	2 / Centrifugal	2 / Centrifugal	2 / Centrifugal	n/a
Fan Diameter (in)	15 x 15	15 x 15	15 x 15	15 x 15	n/a
Standard Static High Eff* — Motor Qty / Drive type	n/a	n/a	n/a	n/a	1 / Belt
Max BHP	n/a	n/a	n/a	n/a	6.5
RPM range	n/a	n/a	n/a	n/a	751–954
Motor frame size	n/a	n/a	n/a	n/a	56
Fan Qty / Type	n/a	n/a	n/a	n/a	2 / Centrifugal
Fan Diameter (in)	n/a	n/a	n/a	n/a	15 x 15
Medium Static High Eff* — Motor Qty / Drive type	n/a	n/a	1 / Belt	1 / Belt	1 / Belt
Max BHP	n/a	n/a	6.5	6.5	10.5
RPM range	n/a	n/a	835–1021	913–1116	920–1190
Motor frame size	n/a	n/a	184T	184T	184T
Fan Qty / Type	n/a	n/a	2 / Centrifugal	2 / Centrifugal	2 / Centrifugal
Fan Diameter (in)	n/a	n/a	15 x 15	15 x 15	15 x 15
High Static High Eff* — Motor Qty / Drive type	n/a	1 / Belt	1 / Belt	1 / Belt	2 / Belt
Max BHP	n/a	6.5	8.7	8.7	11.9
RPM range	n/a	882–1078	941–1176	941–1176	1116–1400
Motor frame size	n/a	184T	213T	213T	213T
Fan Qty / Type	n/a	2 / Centrifugal	2 / Centrifugal	2 / Centrifugal	2 / Centrifugal
Fan Diameter (in)	n/a	15 x 15	15 x 15	15 x 15	15 x 15

* Section 313 of the Energy Independence and Security Act of 2007 (EISA 2007) mandates that the efficiency of general purpose motors we use in our Light Commercial Rooftops rated at 5.0 HP and larger be increased on or after December 19, 2010. We will offer both high and standard efficient motors until inventory is depleted and then shift over solely to the high efficient motors only.

Table 6 (cont.) – PHYSICAL DATA (COOLING) 15 - 27.5 TONS RTPF (Round Tube/Plate Fin Coil Design)

		50TC*17	50TC*20	50TC*24	50TC*28	50TC*30
Evap. fan and motor HORIZONTAL						
Standard Static	Motor Qty / Drive type	1 / Belt	1 / Belt	1 / Belt	1 / Belt	n/a
	Max BHP	2.2	3.3	4.9	4.9	n/a
	RPM range	514 – 680	622 – 822	690 – 863	647 – 791	n/a
	Motor frame size	56	56	56	56	n/a
	Fan Qty / Type	2 / Centrifugal	2 / Centrifugal	2 / Centrifugal	2 / Centrifugal	n/a
	Fan Diameter (in)	18 x 15 & 15 X 11	18 x 15 & 15 X 11	18 x 15 & 15 X 11	18 x 15 & 15 X 11	n/a
Medium Static	Motor Qty / Drive type	1 / Belt	1 / Belt	1 / Belt	1 / Belt	n/a
	Max BHP	3.3	4.9	6.5	6.5	n/a
	RPM range	614 – 780	713 – 879	835 – 1021	755 – 923	n/a
	Motor frame size	56	56	184T	184T	n/a
	Fan Qty / Type	2 / Centrifugal	2 / Centrifugal	2 / Centrifugal	2 / Centrifugal	n/a
	Fan Diameter (in)	18 x 15 & 15 X 11	18 x 15 & 15 X 11	18 x 15 & 15 X 11	18 x 15 & 15 X 11	n/a
High Static	Motor Qty / Drive type	1 / Belt	1 / Belt	1 / Belt	1 / Belt	n/a
	Max BHP	4.9	6.5	8.7	8.7	n/a
	RPM range	746 – 912	882 – 1078	941 – 1176	827 – 1010	n/a
	Motor frame size	56	184T	213T	213T	n/a
	Fan Qty / Type	2 / Centrifugal	2 / Centrifugal	2 / Centrifugal	2 / Centrifugal	n/a
	Fan Diameter (in)	18 x 15 & 15 X 11	18 x 15 & 15 X 11	18 x 15 & 15 X 11	18 x 15 & 15 X 11	n/a
Standard Static High Eff*	Motor Qty / Drive type	n/a	n/a	n/a	n/a	1 / Belt
	Max BHP	n/a	n/a	n/a	n/a	6.5
	RPM range	n/a	n/a	n/a	n/a	687 – 873
	Motor frame size	n/a	n/a	n/a	n/a	184T
	Fan Qty / Type	n/a	n/a	n/a	n/a	2 / Centrifugal
	Fan Diameter (in)	n/a	n/a	n/a	n/a	18 x 15 / 15 X 11
Medium Static High Eff*	Motor Qty / Drive type	n/a	n/a	1 / Belt	1 / Belt	1 / Belt
	Max BHP	n/a	n/a	6.5	6.5	10.5
	RPM range	n/a	n/a	835 – 1021	755 – 923	857 – 1047
	Motor frame size	n/a	n/a	184T	184T	213T
	Fan Qty / Type	n/a	n/a	2 / Centrifugal	2 / Centrifugal	2 / Centrifugal
	Fan Diameter (in)	n/a	n/a	18 x 15/15 x 11	18 x 15/15 x 11	18 x 15 / 15 X 11
High Static High Eff*	Motor Qty / Drive type	n/a	1 / Belt	1 / Belt	1 / Belt	2 / Belt
	Max BHP	n/a	6.5	8.7	8.7	11.9
	RPM range	n/a	882 – 1078	941 – 1176	827 – 1010	1021 – 1281
	Motor frame size	n/a	184T	213T	213T	215T
	Fan Qty / Type	n/a	2 / Centrifugal	2 / Centrifugal	2 / Centrifugal	2 / Centrifugal
	Fan Diameter (in)	n/a	18 x 15/15 x 11	18 x 15/15 x 11	18 x 15/15 x 11	18 x 15 / 15 X 11
Cond. Coil (Circuit A)						
	Coil type	RTPF	RTPF	RTPF	RTPF	RTPF
	Coil Length (in)	70	70	82	75	95
	Coil Height (in)	44	44	44	52	52
	Total face area (ft2)	21.4	21.4	25.1	27.1	34.3
Cond. Coil (Circuit B)						
	Coil type	RTPF	RTPF	RTPF	RTPF	RTPF
	Coil Length (in)	70	70	57	75	95
	Coil Height (in)	44	44	44	52	52
	Total face area (ft2)	21.4	21.4	17.4	27.1	34.3
Cond. fan / motor						
	Qty / Motor drive type	3 / direct	3 / direct	4 / direct	4 / direct	6 / direct
	Motor HP / RPM	1/4 / 1100	1/4 / 1100	1/4 / 1100	1/4 / 1100	1/4 / 1100
	Fan diameter (in)	22	22	22	22	22
Filters						
	RA Filter # / size (in)	6 / 20 x 25 x 2	6 / 20 x 25 x 2	6 / 20 x 25 x 2	9 / 16 x 25 x 2	9 / 16 x 25 x 2
	OA inlet screen # / size (in)	4 / 16 x 25 x 1	4 / 16 x 25 x 1	4 / 16 x 25 x 1	4 / 16 x 25 x 1	4 / 16 x 25 x 1

* Section 313 of the Energy Independence and Security Act of 2007 (EISA 2007) mandates that the efficiency of general purpose motors we use in our Light Commercial Rooftops rated at 5.0 HP and larger be increased on or after December 19, 2010. We will offer both high and standard efficient motors until inventory is depleted and then shift over solely to the high efficient motors only.

Table 7 – ELECTRIC HEAT - ELECTRICAL DATA 15 - 17.5 TONS

UNIT	NOM. V–PH–HZ	IFM TYPE	ELECTRIC HEATER PART NUMBER CRHEATER	NOMINAL (kW)	APPLICATION (kW)	APPLICATION OUTPUT (MBH)
50TC–D17	208/230–3–60	STD	279/270A00	25.0	18.8/23.0	64.1/78.3
			280/271A00	50.0	37.6/45.9	128.1/156.7
			281/272A00	75.0	56.3/68.9	192.2/235.0
		MED	279/270A00	25.0	18.8/23.0	64.1/78.3
			280/271A00	50.0	37.6/45.9	128.1/156.7
			281/272A00	75.0	56.3/68.9	192.2/235.0
		HIGH	279/270A00	25.0	18.8/23.0	64.1/78.3
			280/271A00	50.0	37.6/45.9	128.1/156.7
			281/272A00	75.0	56.3/68.9	192.2/235.0
	460–3–60	STD	282/273A00	25.0	23.0	78.3
			283/274A00	50.0	45.9	156.7
			284/275A00	75.0	68.9	235.0
		MED	282/273A00	25.0	23.0	78.3
			283/274A00	50.0	45.9	156.7
			284/275A00	75.0	68.9	235.0
		HIGH	282/273A00	25.0	23.0	78.3
			283/274A00	50.0	45.9	156.7
			284/275A00	75.0	68.9	235.0
	575–3–60	STD	285/276A00	24.8	22.8	77.7
			286/277A00	49.6	45.6	155.4
			287/278A00	74.4	68.3	233.1
		MED	285/276A00	24.8	22.8	77.7
			286/277A00	49.6	45.6	155.4
			287/278A00	74.4	68.3	233.1
		HIGH	285/276A00	24.8	22.8	77.7
			286/277A00	49.6	45.6	155.4
			287/278A00	74.4	68.3	233.1
50TC–D20	208/230–3–60	STD	279/270A00	25.0	18.8/23.0	64.1/78.3
			280/271A00	50.0	37.6/45.9	128.1/156.7
			281/272A00	75.0	56.3/68.9	192.2/235.0
		MED	279/270A00	25.0	18.8/23.0	64.1/78.3
			280/271A00	50.0	37.6/45.9	128.1/156.7
			281/272A00	75.0	56.3/68.9	192.2/235.0
		HIGH	279/270A00	25.0	18.8/23.0	64.1/78.3
			280/271A00	50.0	37.6/45.9	128.1/156.7
			281/272A00	75.0	56.3/68.9	192.2/235.0
		HIGH–High Eff	279/270A00	25.0	18.8/23.0	64.1/78.3
			280/271A00	50.0	37.6/45.9	128.1/156.7
			281/272A00	75.0	56.3/68.9	192.2/235.0
	460–3–60	STD	282/273A00	25.0	23.0	78.3
			283/274A00	50.0	45.9	156.7
			284/275A00	75.0	68.9	235.0
		MED	282/273A00	25.0	23.0	78.3
			283/274A00	50.0	45.9	156.7
			284/275A00	75.0	68.9	235.0
		HIGH	282/273A00	25.0	23.0	78.3
			283/274A00	50.0	45.9	156.7
			284/275A00	75.0	68.9	235.0
		HIGH–High Eff	282/273A00	25.0	23.0	78.3
			283/274A00	50.0	45.9	156.7
			284/275A00	75.0	68.9	235.0
	575–3–60	STD	285/276A00	24.8	22.8	77.7
			286/277A00	49.6	45.6	155.4
			287/278A00	74.4	68.3	233.1
		MED	285/276A00	24.8	22.8	77.7
			286/277A00	49.6	45.6	155.4
			287/278A00	74.4	68.3	233.1
		HIGH	285/276A00	24.8	22.8	77.7
			286/277A00	49.6	45.6	155.4
			287/278A00	74.4	68.3	233.1
		HIGH–High Eff	285/276A00	24.8	22.8	77.7
			286/277A00	49.6	45.6	155.4
			287/278A00	74.4	68.3	233.1

See Legend on page 14

Table 8 – ELECTRIC HEAT - ELECTRICAL DATA 20 TONS

UNIT	NOM. V–PH–HZ	IFM TYPE	ELECTRIC HEATER PART NUMBER CRHEATER	NOMINAL (kW)	APPLICATION (kW)	APPLICATION OUTPUT (MBH)
50TC–D24	208/203–3–60	STD	279/270A00	25.0	18.8/23.0	64.1/78.3
			280/271A00	50.0	37.6/45.9	128.1/156.7
			281/272A00	75.0	56.3/68.9	192.2/235.0
		MED	279/270A00	25.0	18.8/23.0	64.1/78.3
			280/271A00	50.0	37.6/45.9	128.1/156.7
			281/272A00	75.0	56.3/68.9	192.2/235.0
		HIGH	279/270A00	25.0	18.8/23.0	64.1/78.3
			280/271A00	50.0	37.6/45.9	128.1/156.7
			281/272A00	75.0	56.3/68.9	192.2/235.0
		MED–High Eff	279/270A00	25.0	18.8/23.0	64.1/78.3
			280/271A00	50.0	37.6/45.9	128.1/156.7
			281/272A00	75.0	56.3/68.9	192.2/235.0
		HIGH–High Eff	279/270A00	25.0	18.8/23.0	64.1/78.3
			280/271A00	50.0	37.6/45.9	128.1/156.7
			281/272A00	75.0	56.3/68.9	192.2/235.0
	460–3–60	STD	282/273A00	25.0	23.0	78.3
			283/274A00	50.0	45.9	156.7
			284/275A00	75.0	68.9	235.0
		MED	282/273A00	25.0	23.0	78.3
			283/274A00	50.0	45.9	156.7
			284/275A00	75.0	68.9	235.0
		HIGH	282/273A00	25.0	23.0	78.3
			283/274A00	50.0	45.9	156.7
			284/275A00	75.0	68.9	235.0
		MED–High Eff	282/273A00	25.0	23.0	78.3
			283/274A00	50.0	45.9	156.7
			284/275A00	75.0	68.9	235.0
		HIGH–High Eff	282/273A00	25.0	23.0	78.3
			283/274A00	50.0	45.9	156.7
			284/275A00	75.0	68.9	235.0
	575–3–60	STD	285/276A00	24.8	22.8	77.7
			286/277A00	49.6	45.6	155.4
			287/278A00	74.4	68.3	233.1
		MED	285/276A00	24.8	22.8	77.7
			286/277A00	49.6	45.6	155.4
			287/278A00	74.4	68.3	233.1
		HIGH	285/276A00	24.8	22.8	77.7
			286/277A00	49.6	45.6	155.4
			287/278A00	74.4	68.3	233.1
		MED–High Eff	285/276A00	24.8	22.8	77.7
			286/277A00	49.6	45.6	155.4
			287/278A00	74.4	68.3	233.1
		HIGH–High Eff	285/276A00	24.8	22.8	77.7
			286/277A00	49.6	45.6	155.4
			287/278A00	74.4	68.3	233.1

LEGEND

APP PWR – 208 / 230V / 460V / 575V
C.O. – Convenient outlet
FLA – Full load amps
IFM – Indoor fan motor
NOM PWR – 240V / 480V / 600V
P.E. – Power exhaust
PWRD – Powered convenient outlet
UNPWRD – Unpowered convenient outlet

Table 9 – ELECTRIC HEAT - ELECTRICAL DATA 25 TONS

UNIT	NOM. V–PH–HZ	IFM TYPE	ELECTRIC HEATER PART NUMBER CRHEATER	NOMINAL (kW)	APPLICATION (kW)	APPLICATION OUTPUT (MBH)
50TC–D28	208/230–3–60	STD	279/270A00	25.0	18.8/23.0	64.1/78.3
			280/271A00	50.0	37.6/45.9	128.1/156.7
			281/272A00	75.0	56.3/68.9	192.2/235.0
		MED	279/270A00	25.0	18.8/23.0	64.1/78.3
			280/271A00	50.0	37.6/45.9	128.1/156.7
			281/272A00	75.0	56.3/68.9	192.2/235.0
		HIGH	279/270A00	25.0	18.8/23.0	64.1/78.3
			280/271A00	50.0	37.6/45.9	128.1/156.7
			281/272A00	75.0	56.3/68.9	192.2/235.0
		MED–High Eff	279/270A00	25.0	18.8/23.0	64.1/78.3
			280/271A00	50.0	37.6/45.9	128.1/156.7
			281/272A00	75.0	56.3/68.9	192.2/235.0
		HIGH–High Eff	279/270A00	25.0	18.8/23.0	64.1/78.3
			280/271A00	50.0	37.6/45.9	128.1/156.7
			281/272A00	75.0	56.3/68.9	192.2/235.0
	460–3–60	STD	282/273A00	25.0	23.0	78.3
			283/274A00	50.0	45.9	156.7
			284/275A00	75.0	68.9	235.0
		MED	282/273A00	25.0	23.0	78.3
			283/274A00	50.0	45.9	156.7
			284/275A00	75.0	68.9	235.0
		HIGH	282/273A00	25.0	23.0	78.3
			283/274A00	50.0	45.9	156.7
			284/275A00	75.0	68.9	235.0
		MED–High Eff	282/273A00	25.0	23.0	78.3
			283/274A00	50.0	45.9	156.7
			284/275A00	75.0	68.9	235.0
		HIGH–High Eff	282/273A00	25.0	23.0	78.3
			283/274A00	50.0	45.9	156.7
			284/275A00	75.0	68.9	235.0
	575–3–60	STD	285/276A00	24.8	22.8	77.7
			286/277A00	49.6	45.6	155.4
			287/278A00	74.4	68.3	233.1
		MED	285/276A00	24.8	22.8	77.7
			286/277A00	49.6	45.6	155.4
			287/278A00	74.4	68.3	233.1
		HIGH	285/276A00	24.8	22.8	77.7
			286/277A00	49.6	45.6	155.4
			287/278A00	74.4	68.3	233.1
		MED–High Eff	285/276A00	24.8	22.8	77.7
			286/277A00	49.6	45.6	155.4
			287/278A00	74.4	68.3	233.1
		HIGH–High Eff	285/276A00	24.8	22.8	77.7
			286/277A00	49.6	45.6	155.4
			287/278A00	74.4	68.3	233.1

LEGEND

APP PWR – 208 / 230V / 460V / 575V
C.O. – Convenient outlet
FLA – Full load amps
IFM – Indoor fan motor
NOM PWR – 240V / 480V / 600V
P.E. – Power exhaust
PWRD – Powered convenient outlet
UNPWRD – Unpowered convenient outlet

Table 10 – ELECTRIC HEAT - ELECTRICAL DATA **27.5 TONS**

UNIT	NOM. V–Ph–Hz	IFM TYPE	Electric Heater Part Number	Nominal (kW)	Application (kW)	Application Output (MBH)
50TC–D30	208/230–3–60	STD–High Eff	279A00	25.0	18.8/23.0	64.1/78.3
			280A00	50.0	37.6/45.9	128.1/156.7
			281A00	75.0	56.3/68.9	192.2/235.0
		MED–High Eff	279A00	25.0	18.8/23.0	64.1/78.3
			280A00	50.0	37.6/45.9	128.1/156.7
			281A00	75.0	56.3/68.9	192.2/235.0
		HIGH–High Eff	279A00	25.0	18.8/23.0	64.1/78.3
			280A00	50.0	37.6/45.9	128.1/156.7
			281A00	75.0	56.3/68.9	192.2/235.0
	460–3–60	STD–High Eff	282A00	25.0	23.0	78.3
			283A00	50.0	45.9	156.7
			284A00	75.0	68.9	235.0
		MED–High Eff	282A00	25.0	23.0	78.3
			283A00	50.0	45.9	156.7
			284A00	75.0	68.9	235.0
		HIGH–High Eff	282A00	25.0	23.0	78.3
			283A00	50.0	45.9	156.7
			284A00	75.0	68.9	235.0
	575–3–60	STD–High Eff	285A00	24.8	22.8	77.7
			286A00	49.6	45.6	155.4
			287A00	74.4	68.3	233.1
		MED–High Eff	285A00	24.8	22.8	77.7
			286A00	49.6	45.6	155.4
			287A00	74.4	68.3	233.1
		HIGH–High Eff	285A00	24.8	22.8	77.7
			286A00	49.6	45.6	155.4
			287A00	74.4	68.3	233.1

LEGEND

APP PWR – 208 / 230V / 460V / 575V
C.O. – Convenient outlet
FLA – Full load amps
IFM – Indoor fan motor
NOM PWR – 240V / 480V / 600V
P.E. – Power exhaust
PWRD – Powered convenient outlet
UNPWRD – Unpowered convenient outlet

DIMENSIONS

	CONNECTION SIZES
A	1 3/8" DIA [35] FIELD POWER SUPPLY KNOCKOUT
B	3" DIA [76] FIELD POWER SUPPLY KNOCKOUT
C	3 5/8" DIA [92] FIELD POWER SUPPLY KNOCKOUT
D	7/8" DIA [22] FIELD CONTROL WIRING HOLE
E	3/4"-14 NPT CONDENSATE DRAIN

NOTES:

1. DIMENSIONS ARE IN INCHES. DIMENSIONS IN [ ] ARE IN MILLIMETERS.
2. CENTER OF GRAVITY
3. DIRECTION OF AIR FLOW

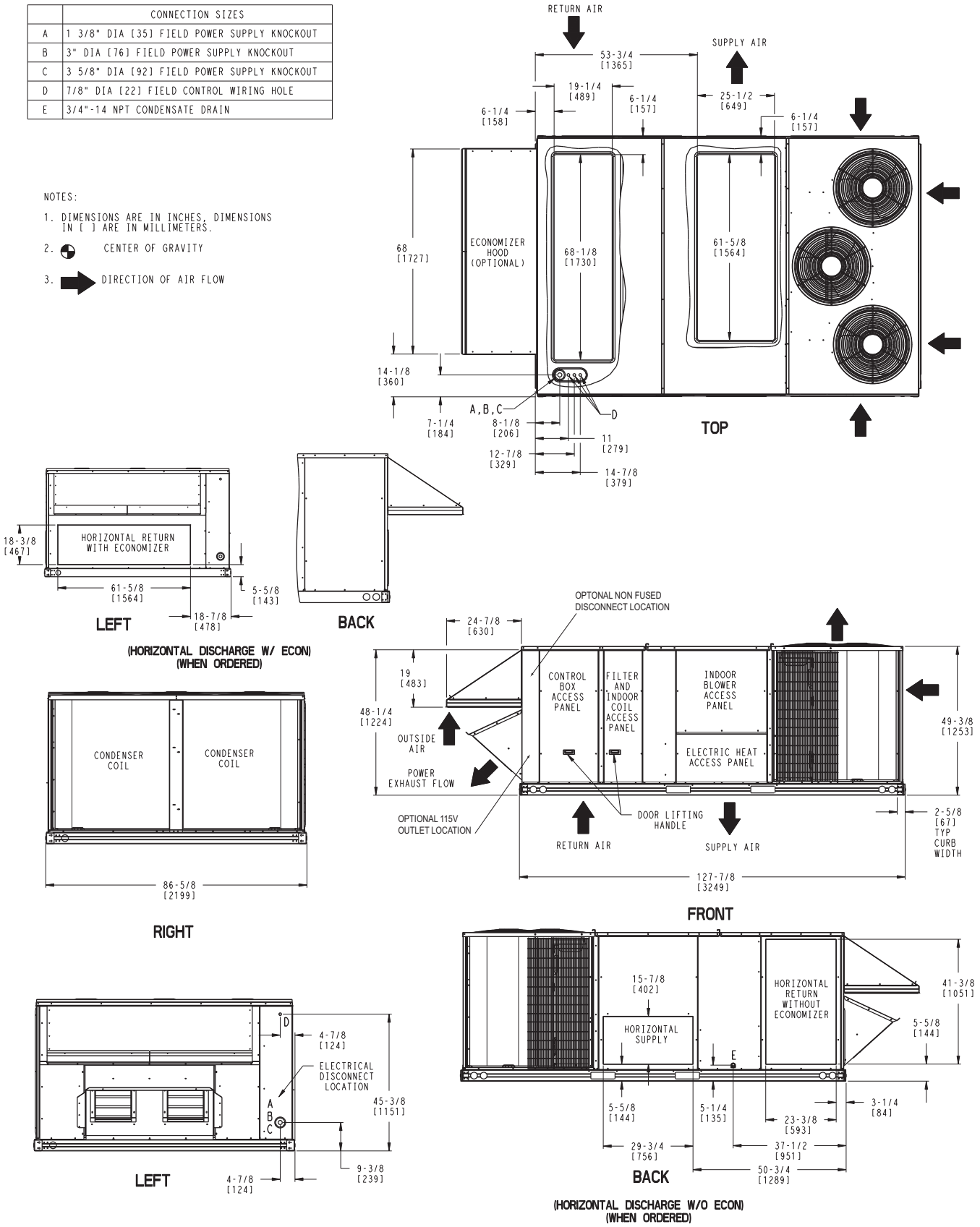

Fig. 1 - Dimensions 50TC-D17-20

50TC

DIMENSIONS (cont.)

Novation - All Aluminum Coil Design

UNIT	MAX UNIT WEIGHT		CORNER WEIGHT (A)		CORNER WEIGHT (B)		CORNER WEIGHT (C)		CORNER WEIGHT (D)		C.G.		
	LBS.	KG.	LBS.	KG.	LBS.	KG.	LBS.	KG.	LBS.	KG.	X	Y	Z
50TC17	2033	922	403	183	412	187	446	202	436	198	44 3/4 [1137]	64 17/32 [1638]	16 1/2 [419]
50TC20	2048	929	407	185	416	189	450	204	440	200	44 3/4 [1137]	64 17/32 [1638]	16 1/2 [419]

RTPF - Round Tube/Plate Fin Coil Design

UNIT	MAX UNIT WEIGHT		CORNER WEIGHT (A)		CORNER WEIGHT (B)		CORNER WEIGHT (C)		CORNER WEIGHT (D)		C.G.		
	LBS.	KG.	LBS.	KG.	LBS.	KG.	LBS.	KG.	LBS.	KG.	X	Y	Z
50TC17	2228	1011	415	188	492	223	488	221	412	187	42 29/32 [1090]	69 1/4 [1759]	16 1/2 [419]
50TC20	2243	1017	419	190	496	225	493	224	415	188	42 29/32 [1090]	69 1/4 [1759]	16 1/2 [419]

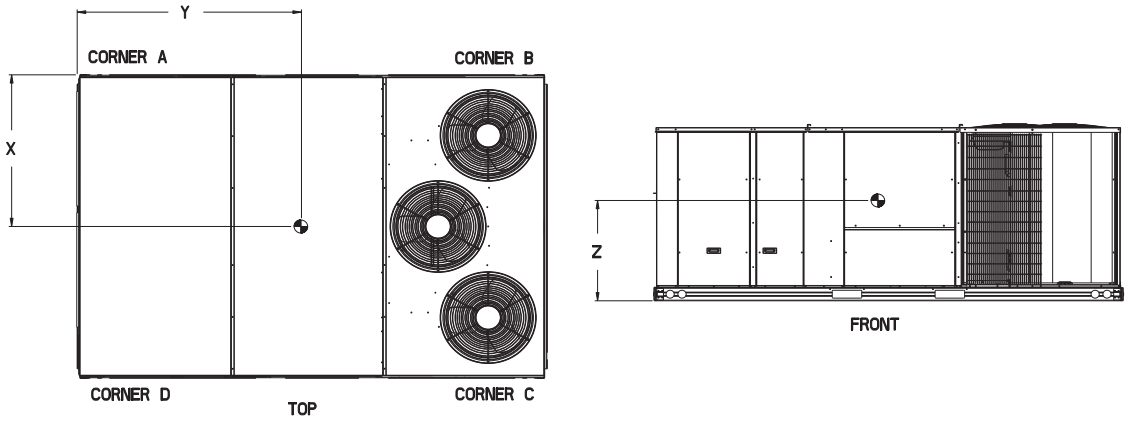

C11164

Fig. 2 - Dimensions 50TC-D17-20

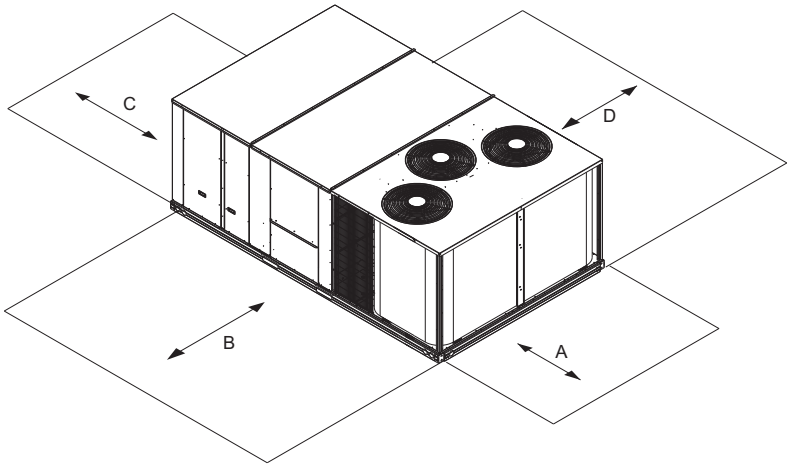

C11343

Fig. 3 - Service Clearance

LOC	DIMENSION	CONDITION
A	36–in	Recommended clearance for airflow and service.
B	42–in	Recommended clearance for airflow and service.
C	18–in	1. No CO. 2. No Economizer. 3. No field installed disconnect on economizer hood side (Factory–installed disconnect installed.
	36–in	1. CO installed. 2. Vertical surface behind servicer is electrically non–conductive (e.g., wood, fiberglass).
	42–in	1. CO installed. 2 Vertical surface behind servicer is electrically conductive (e.g., metal, masonry)
	96–in	1. Economizer and/or Power Exhaust installed.
D	42–in	Recommended clearance for service.

DIMENSIONS (cont.)

UNIT SIZE	"A"	ROOF CURB ACCESSORY
17,20	1′-2" [356.0] 2′-0" [610.0]	CRRFCURB045A00 CRRFCURB046A00

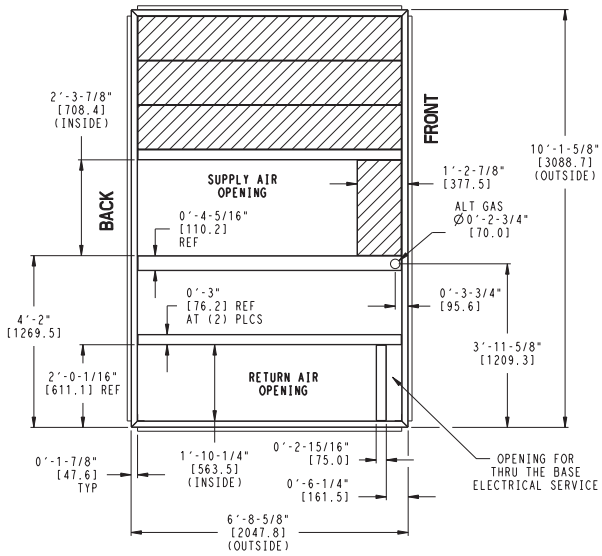

NOTES:

1 ROOF CURB ACCESSORY IS SHIPPED UNASSEMBLED.

2 DIMENSIONS IN [ ] ARE IN MILLIMETERS.

3 ROOF CURB GALVANIZED STEEL.

4 ATTACH DUCTWORK TO CURB (FLANGES ON DUCT REST ON CURB)

5 SERVICE CLEARANCE 4 ft ON EACH SIDE

DIRECTION OF AIR FLOW

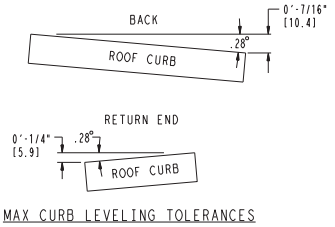

MAX CURB LEVELING TOLERANCES

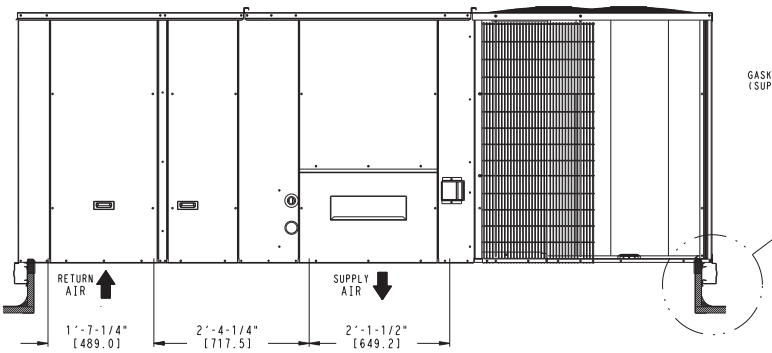

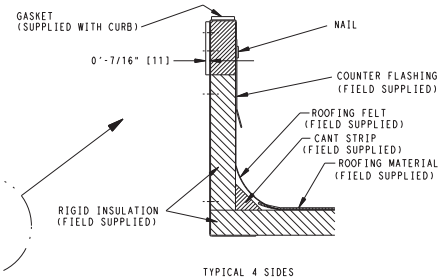

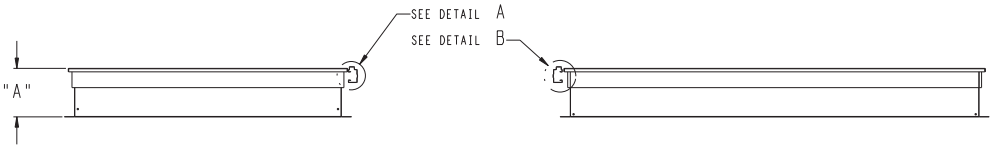

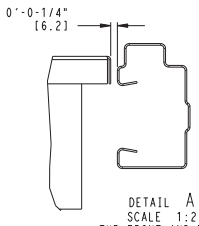

DETAIL A
SCALE 1:2
TYP FRONT AND BACK

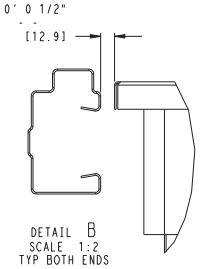

DETAIL B
SCALE 1:2
TYP BOTH ENDS

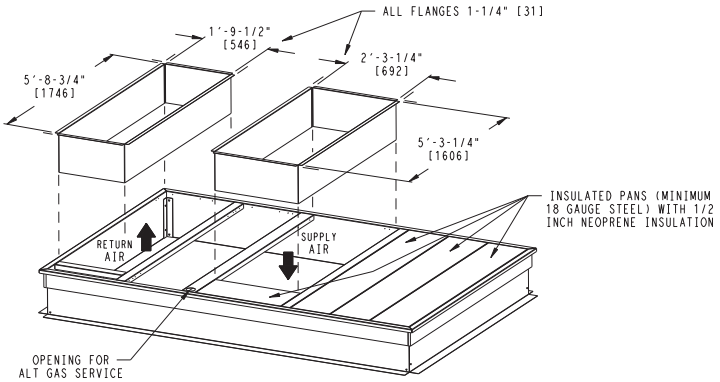

C09052

Fig. 4 - Curb Dimensions 50TC*D17-20

50TC

DIMENSIONS (cont.)

	CONNECTION SIZES
A	1 3/8" DIA [35] FIELD POWER SUPPLY KNOCKOUT
B	3" DIA [76] FIELD POWER SUPPLY KNOCKOUT
C	3 5/8" DIA [92] FIELD POWER SUPPLY KNOCKOUT
D	7/8" DIA [22] FIELD CONTROL WIRING HOLE
E	3/4"-14 NPT CONDENSATE DRAIN

UNIT	G	H
24 SIZE	41-3/8 [1051]	49-3/8 [1253]
28 SIZE	49-3/8 [1253]	57-3/8 [1456]

NOTES:

1. DIMENSIONS ARE IN INCHES, DIMENSIONS IN [ ] ARE IN MILLIMETERS.
2. CENTER OF GRAVITY
3. DIRECTION OF AIR FLOW

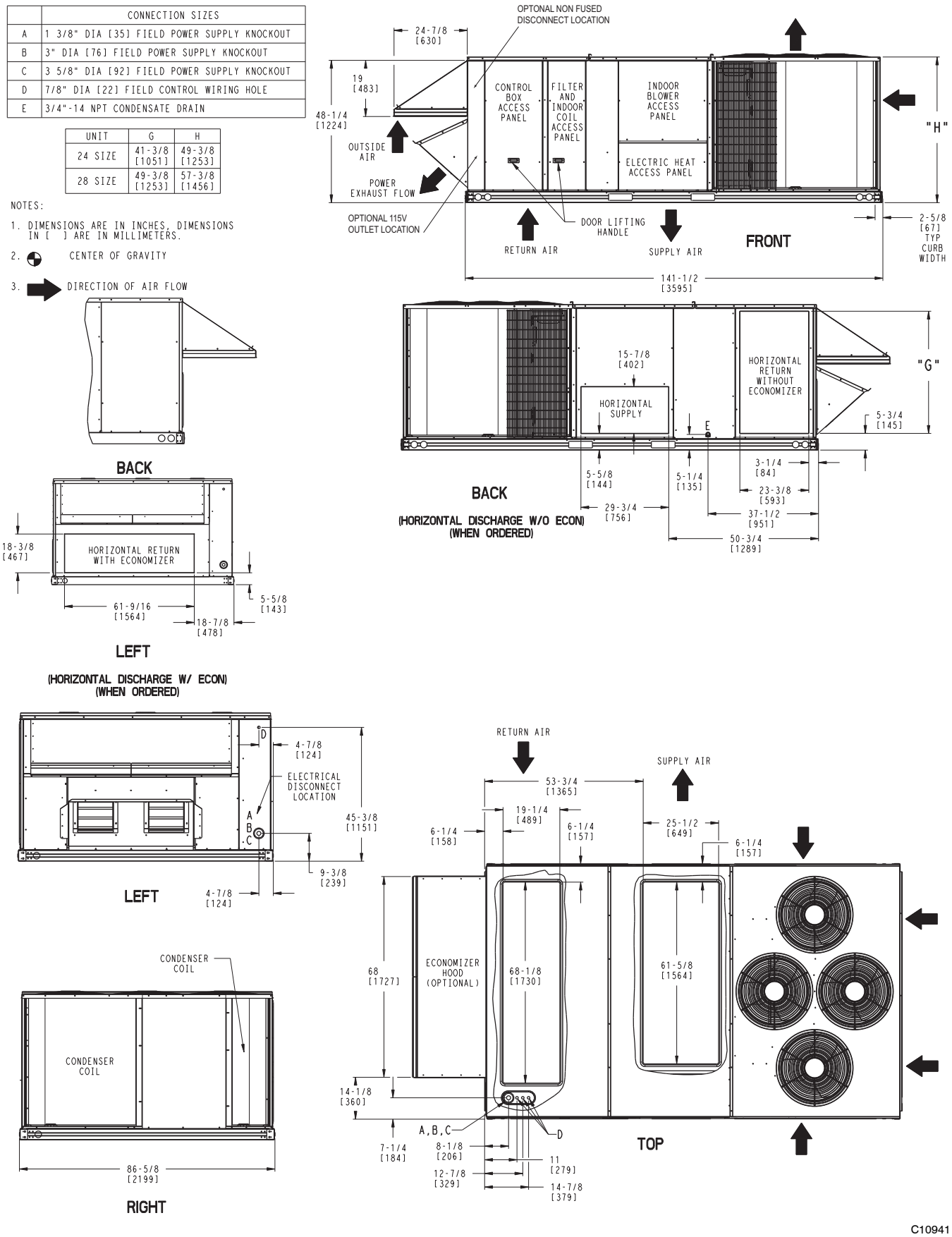

Fig. 5 - Dimensions 50TC-D24-28

DIMENSIONS (cont.)

Novation-All Aluminum Coil Design

UNIT	MAX UNIT WEIGHT		CORNER WEIGHT (A)		CORNER WEIGHT (B)		CORNER WEIGHT (C)		CORNER WEIGHT (D)		C.G.		
	LBS.	KG.	LBS.	KG.	LBS.	KG.	LBS.	KG.	LBS.	KG.	X	Y	Z
50TC24	2198	997	359	163	506	230	583	264	414	188	46 5/32 [1173]	82 5/8 [2098]	16 1/2 [419]
50TC28	2327	1056	384	174	541	245	624	283	443	201	46 5/32 [1173]	82 5/8 [2098]	19 [483]

RTPF-Round Tube/Plate Fin Coil Design

UNIT	MAX UNIT WEIGHT		CORNER WEIGHT (A)		CORNER WEIGHT (B)		CORNER WEIGHT (C)		CORNER WEIGHT (D)		C.G.		
	LBS.	KG.	LBS.	KG.	LBS.	KG.	LBS.	KG.	LBS.	KG.	X	Y	Z
50TC24	2277	1033	532	241	522	237	456	207	464	210	40 5/32 [1020]	70 [1778]	16 1/2 [419]
50TC28	2525	1145	545	247	539	245	504	229	510	231	41 21/32 [1058]	70 1/4 [1784]	19 [483]

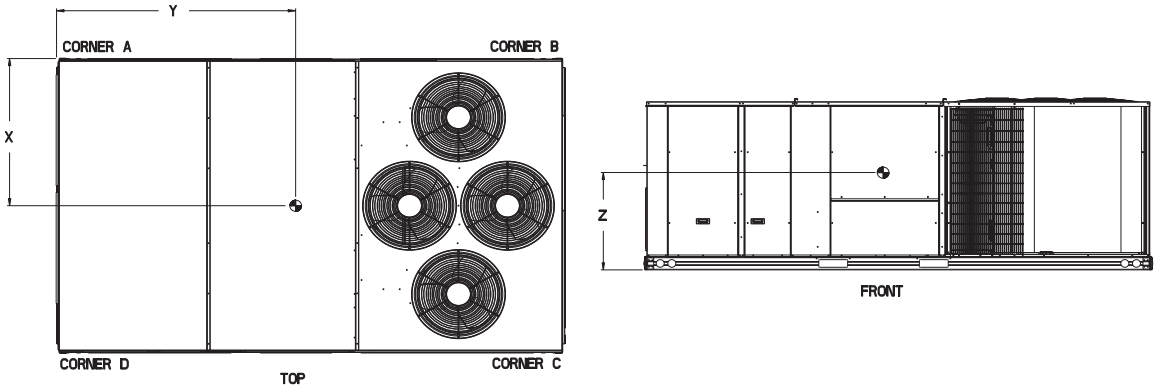

C11165

Fig. 6 - Dimensions 50TC-D24-28

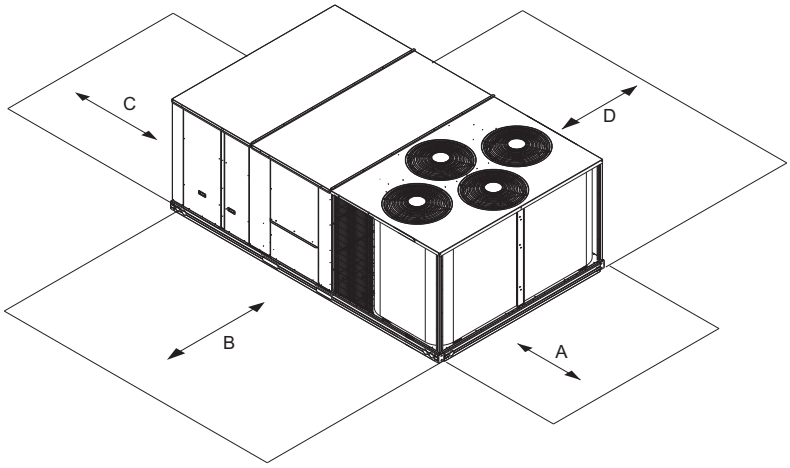

C11342

Fig. 7 - Service Clearance

LOC	DIMENSION	CONDITION
A	36–in	Recommended clearance for airflow and service.
B	42–in	Recommended clearance for airflow and service.
C	18–in	1. No CO. 2. No Economizer. 3. No field installed disconnect on economizer hood side (Factory–installed disconnect installed.
	36–in	1. CO installed. 2. Vertical surface behind servicer is electrically non–conductive (e.g., wood, fiberglass).
	42–in	1. CO installed. 2 Vertical surface behind servicer is electrically conductive (e.g., metal, masonry)
	96–in	1. Economizer and/or Power Exhaust installed.
D	42–in	Recommended clearance for service.

DIMENSIONS (cont.)

UNIT SIZE	"A"	ROOF CURB ACCESSORY
24,28	1′-2" [356.0] 2′-0" [610.0]	CRRFCURB047A00 CRRFCURB048A00

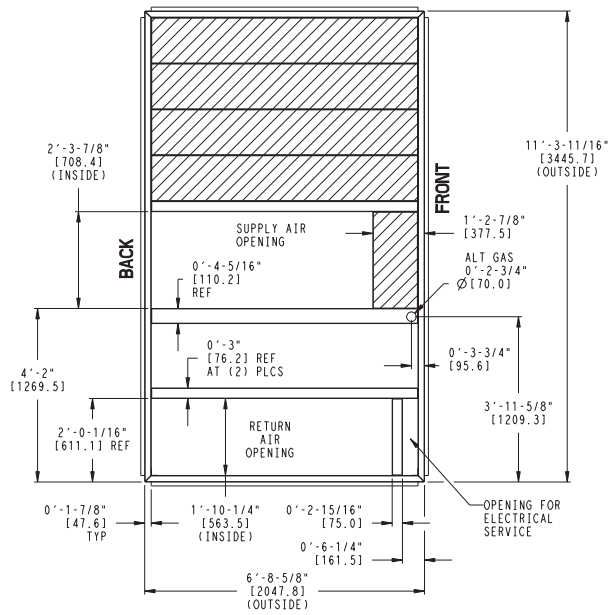

NOTES:

1 ROOF CURB ACCESSORY IS SHIPPED UNASSEMBLED.

2 DIMENSIONS IN [ ] ARE IN MILLIMETERS.

3 ROOF CURB GALVANIZED STEEL.

4 ATTACH DUCTWORK TO CURB (FLANGES ON DUCT REST ON CURB)

5 SERVICE CLEARANCE 4 ft ON EACH SIDE

DIRECTION OF AIR FLOW

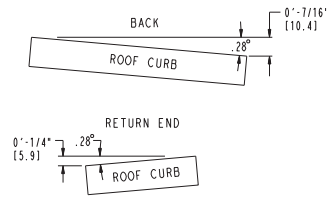

MAX CURB LEVELING TOLERANCES

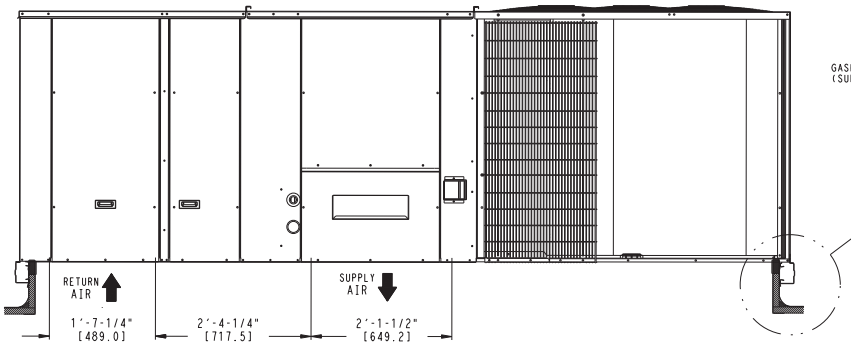

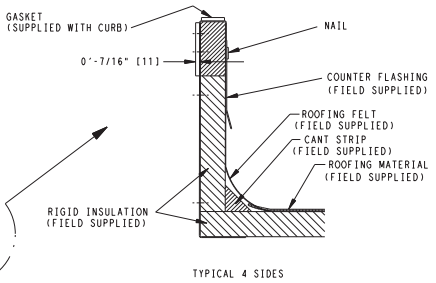

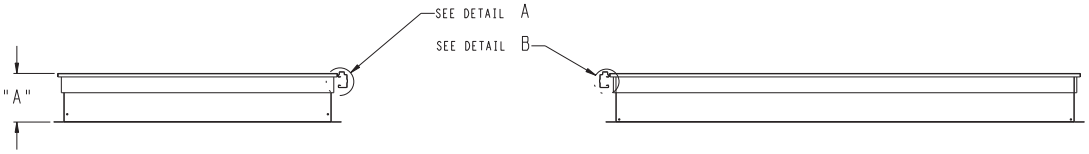

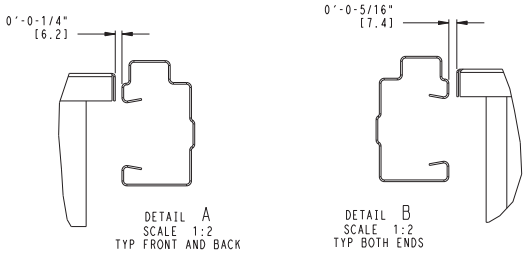

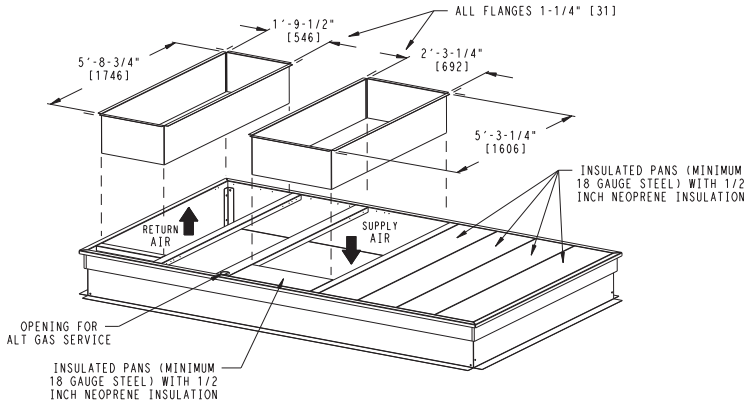

C09100

Fig. 8 – Curb Dimensions

DIMENSIONS (cont.)

NOTES:

1. DIMENSIONS ARE IN INCHES, DIMENSIONS IN [ ] ARE IN MILLIMETERS.
2. CENTER OF GRAVITY
3. DIRECTION OF AIR FLOW

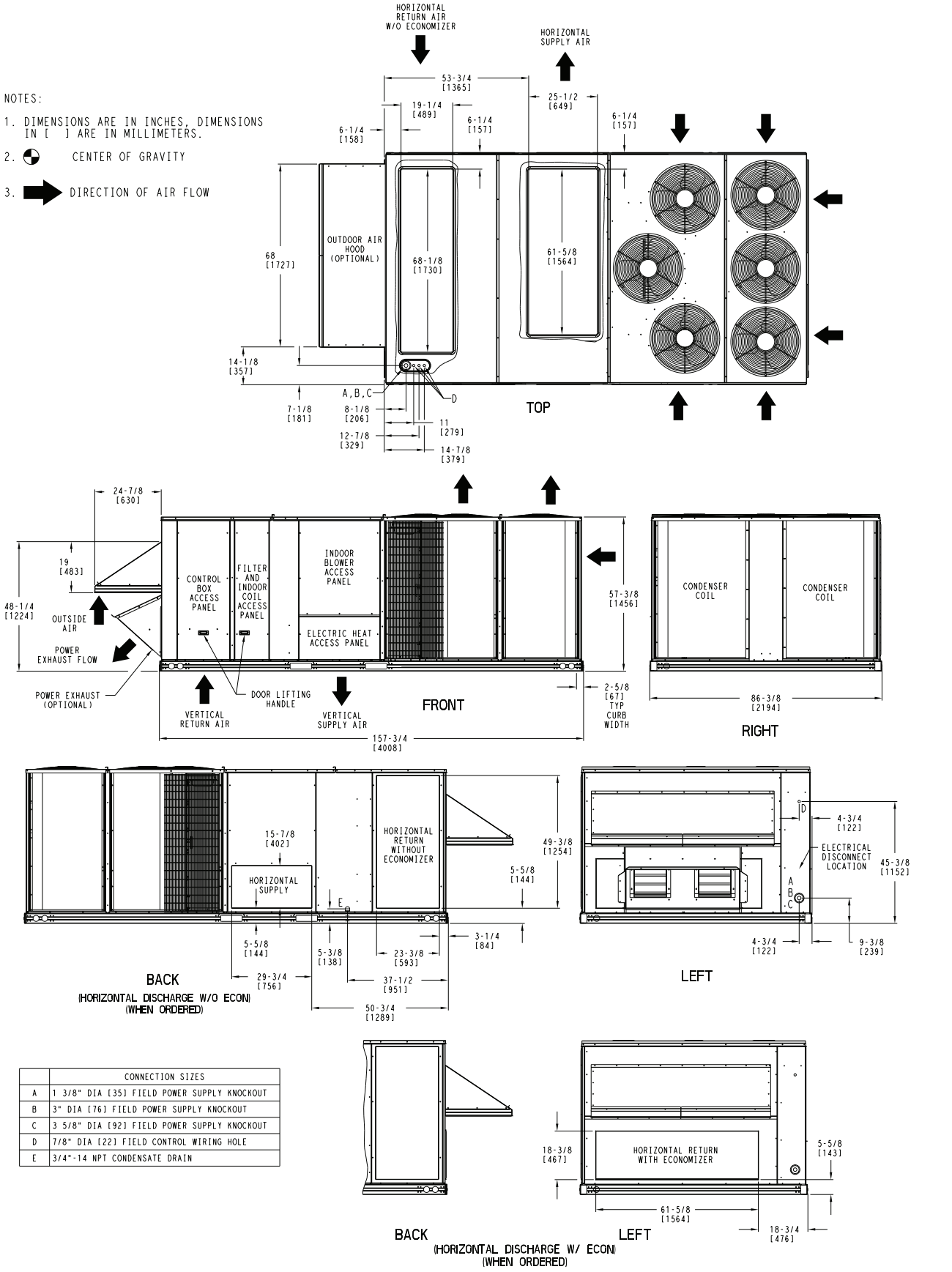

	CONNECTION SIZES
A	1 3/8" DIA [35] FIELD POWER SUPPLY KNOCKOUT
B	3" DIA [76] FIELD POWER SUPPLY KNOCKOUT
C	3 5/8" DIA [92] FIELD POWER SUPPLY KNOCKOUT
D	7/8" DIA [22] FIELD CONTROL WIRING HOLE
E	3/4"-14 NPT CONDENSATE DRAIN

Fig. 9 – Dimensions 50TC*D30

DIMENSIONS (cont.)

UNIT	STD UNIT WEIGHT *		CORNER WEIGHT (A)		CORNER WEIGHT (B)		CORNER WEIGHT (C)		CORNER WEIGHT (D)		C.G.		
	LBS.	KG.	LBS.	KG.	LBS.	KG.	LBS.	KG.	LBS.	KG.	X	Y	Z
50TC30	2513	1142	664	302	566	257	591	269	693	315	44 [1118]	72 1/2 [1842]	19 [483]

* STANDARD UNIT WEIGHT IS WITHOUT ELECTRIC HEAT AND WITHOUT PACKAGING.
FOR OTHER OPTIONS AND ACCESSORIES, REFER TO THE PRODUCT DATA CATALOG.

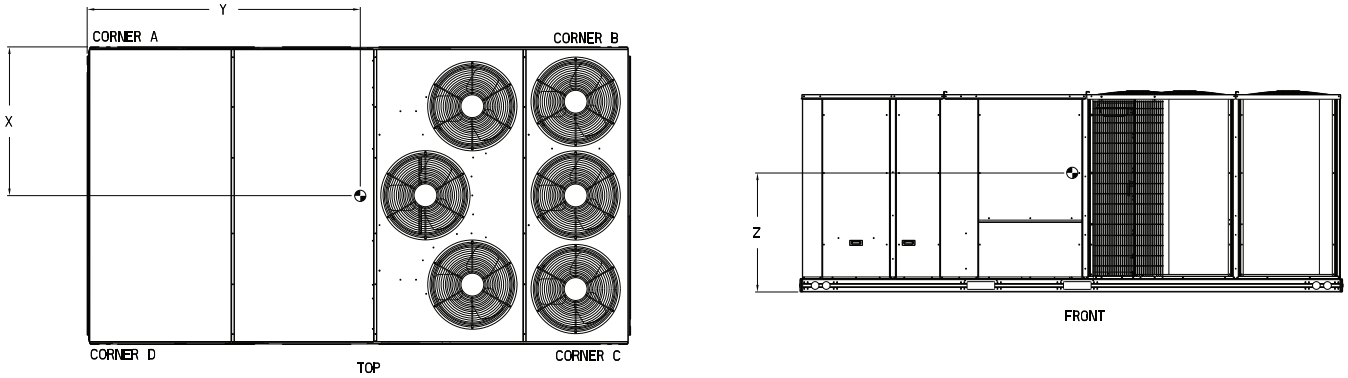

C11226A

Fig. 10 - 50TC*D30

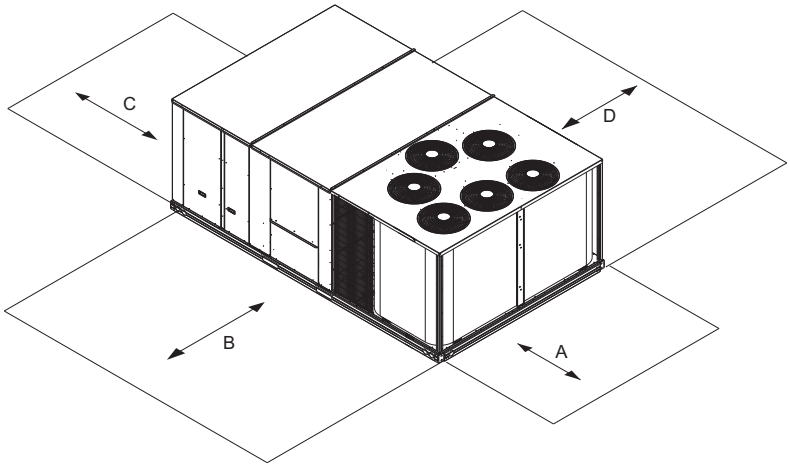

C11344

LOC	DIMENSION	CONDITION
A	36–in	Recommended clearance for airflow and service.
B	42–in	Recommended clearance for airflow and service.
C	18–in	1. No CO. 2. No Economizer. 3. No field installed disconnect on economizer hood side (Factory–installed disconnect installed.
	36–in	1. CO installed. 2. Vertical surface behind servicer is electrically non–conductive (e.g., wood, fiberglass).
	42–in	1. CO installed. 2 Vertical surface behind servicer is electrically conductive (e.g., metal, masonry)
	96–in	1. Economizer and/or Power Exhaust installed.
D	42–in	Recommended clearance for service.

DIMENSIONS (cont.)

UNIT SIZE	"A"	ROOF CURB ACCESSORY
30	1′-2" [356.0] 2′-0" [610.0]	CRRFCURB049A00 CRRFCURB050A00

NOTES:
1 ROOF CURB ACCESSORY IS SHIPPED UNASSEMBLED.
2 BOLT HEADS TO BE ON INSIDE OF FLANGE. CLEARANCE IS [11] 0-0-7/16" TYP ALL CORNERS.
3 DIMENSIONS IN [ ] ARE IN MILLIMETERS.
4 ROOF CURB GALVANIZED STEEL.
5 ATTACH DUCTWORK TO CURB (FLANGES ON DUCT REST ON CURB)
6 SERVICE CLEARANCE 4 ft ON EACH SIDE
➡ DIRECTION OF AIR FLOW

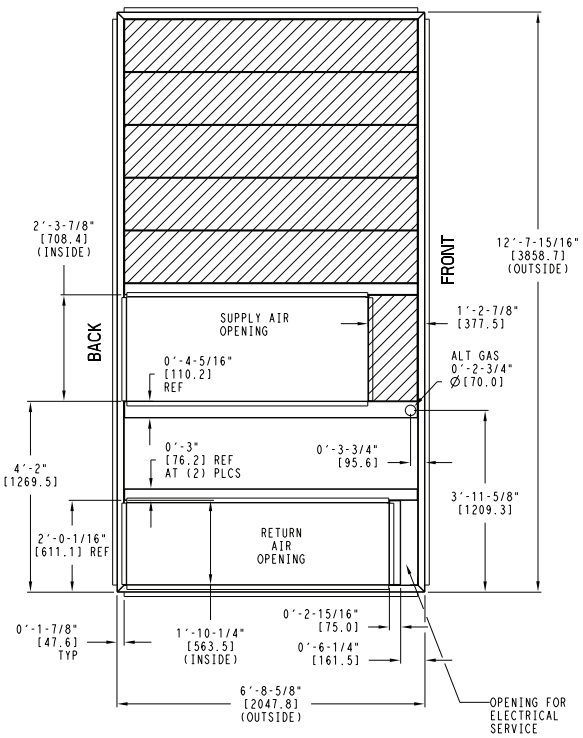

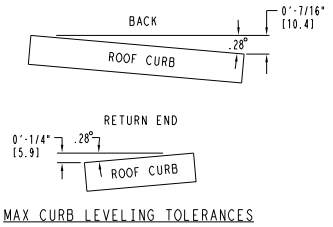

MAX CURB LEVELING TOLERANCES

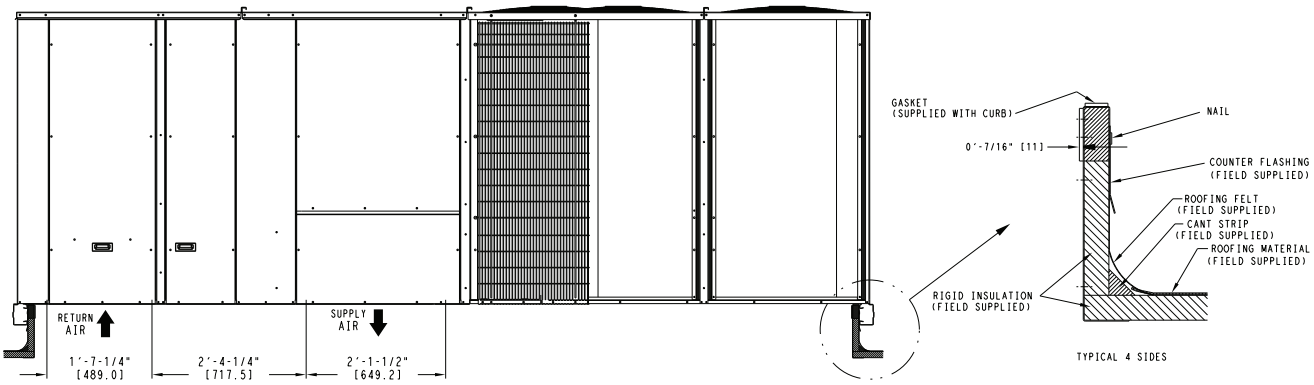

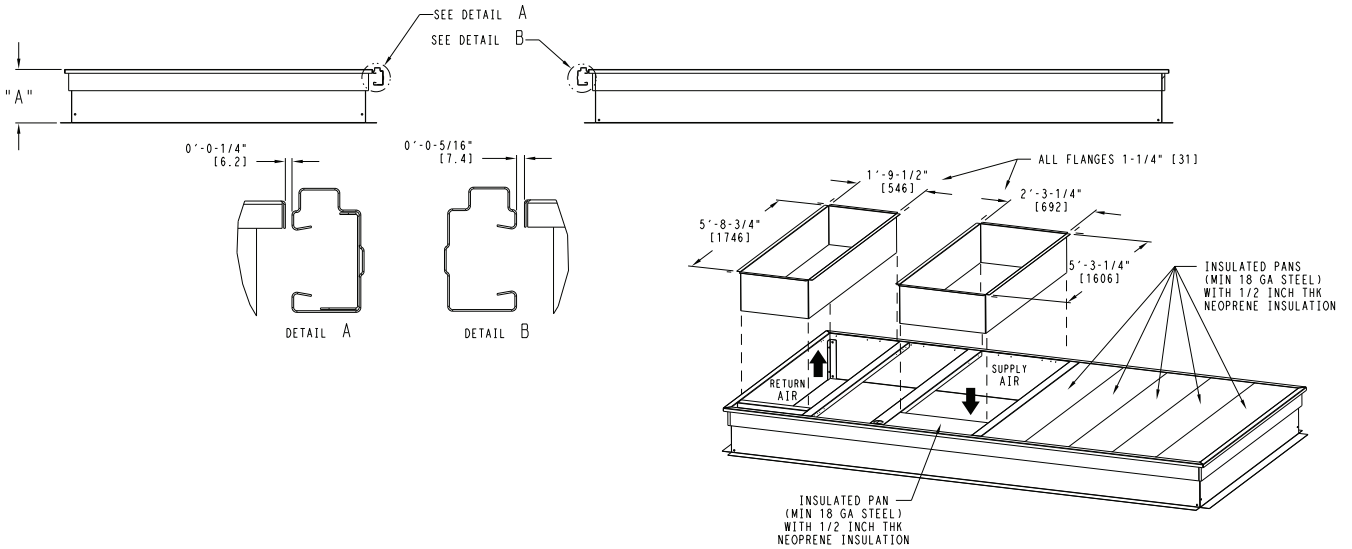

C11251

Fig. 11 - Curb Dimensions

OPTIONS AND ACCESSORIES WEIGHT ADDERS

BASE UNIT WITH OPTIONS AND ACCESSORIES (Weight Adders)	MAX WEIGHT ADDER									
	50TC*17		50TC*20		50TC*24		50TC*28		50TC*30	
	lb	kg	lb	kg	lb	kg	lb	kg	lb	kg
Humidi–MiZer[1]	83	38	83	38	83	38	92	42	n/a	n/a
Base Unit Operating Weight	1907	865	1922	872	2072	940	2197	997	2640	1197
Power Exhaust	125	57	125	57	125	57	125	57	125	57
Economizer	170	77	170	77	170	77	195	88	195	88
Copper Tube/Fin Evaporator Coil	110	50	110	50	135	61	161	73	173	78
Low Gas Heat	85	39	85	39	85	39	85	39	85	39
Medium Gas Heat	90	41	90	41	90	41	90	41	90	41
High Gas Heat	113	51	113	51	113	51	113	51	113	51
Flue Discharge Deflector	7	3	7	3	7	3	7	3	7	3
Roof Curb 14–in (356mm)	240	109	240	109	240	109	240	109	255	116
Roof Curb 24–in (610mm)	340	154	340	154	340	154	340	154	355	161
Louvered Hail Guard	60	27	60	27	120	54	135	61	150	68
CO_2 sensor	5	2	5	2	5	2	5	2	5	2
Return Smoke Detector	5	2	5	2	5	2	5	2	5	2
Supply Smoke Detector	5	2	5	2	5	2	5	2	5	2
Fan/Filter Status Switch	2	1	2	1	2	1	2	1	2	1
Non–Fused Disconnect	15	7	15	7	15	7	15	7	15	7
Powered Convenience Outlet	35	16	35	16	35	16	35	16	35	16
Non–Powered Convenience Outlet	5	2	5	2	5	2	5	2	5	2
Enthalpy Sensor	2	1	2	1	2	1	2	1	2	1
Differential Enthalpy Sensor	3	1	3	1	3	1	3	1	3	1
Two Position Motorized Damper	50	23	50	23	50	23	65	29	65	29
Manual Damper	35	16	35	16	35	16	40	18	40	18
Field Filter Track 4–in (102mm)	12	5	12	5	12	5	12	5	12	5
MotorMaster Controller	35	16	35	16	35	16	35	16	35	16
Medium Static Motor/Drive	5	2	6	3	6	3	6	3	10	5
High Static Motor/Drive	11	5	12	5	16	7	16	7	20	9
Barometric Relief Hood (Horizontal)	25	11	25	11	25	11	25	11	25	11

[1] For Humidi–MiZer add MotorMaster Controller.

APPLICATION/SELECTION DATA

Min operating ambient temp (cooling):

In mechanical cooling mode, your Carrier rooftop can safely operate down to an outdoor ambient temperature of 30°F (-1°C). It is possible to provide cooling at lower outdoor ambient temperatures by using less outside air, economizers, and/or accessory low ambient kits.

Max operating ambient temp (cooling):

The maximum operating ambient temperature for cooling mode is 115°F (46°C). While cooling operation above 115°F (46°C) may be possible, it could cause either a reduction in performance, reliability, or a protective action by the unit's internal safety devices.

Min and max airflow (cooling mode):

To maintain safe and reliable operation of your rooftop, operate within the cooling airflow limits. Operating above the max may cause blow-off, undesired airflow noise, or airflow related problems with the rooftop unit. Operating below the min may cause problems with coil freeze-up.

Airflow:

All units are draw-through in cooling mode.

Outdoor air application strategies:

Economizers reduce operating expenses and compressor run time by providing a free source of cooling and a means of ventilation to match application changing needs. In fact, they should be considered for most applications. Also, consider the various economizer control methods and their benefits, as well as sensors required to accomplish your application goals. Please contact your local Carrier representative for assistance.

Motor limits, break horsepower (BHP):

Due to Carrier's internal unit design, air path, and specially designed motors, the full horsepower (maximum continuous BHP) band, as listed in Table 5, can be used with the utmost confidence. There is no need for extra safety factors, as Carrier's motors are designed and rigorously tested to use the entire, listed BHP range without either nuisance tripping or premature motor failure.

Sizing a rooftop

Bigger isn't necessarily better. While an air conditioner needs to have enough capacity to meet the load, it doesn't need excess capacity. In fact, having excess capacity typically results in very poor part load performance and humidity control.

Using higher design temperatures than ASHRAE recommends for your location, adding "safety factors" to the calculated load, and rounding up to the next largest unit, are all signs of oversizing air conditioners. Oversizing can cause short-cycling, and short cycling leads to poor humidity control, reduced efficiency, higher utility bills, drastic indoor temperature swings, excessive noise, and increased wear and tear on the air conditioner.

Rather than oversizing an air conditioner, wise contractors and engineers "right-size" or even slightly undersize air conditioners. Correctly sizing an air conditioner controls humidity better; promotes efficiency; reduces utility bills; extends equipment life, and maintains even, comfortable temperatures.

Low ambient applications

When equipped with a Carrier economizer, your rooftop unit can cool your space by bringing in fresh, cool outside air. In fact, when so equipped, accessory low-ambient kit may not be necessary. In low ambient conditions, unless the outdoor air is excessively humid or contaminated, economizer-based "free cooling" is the preferred less costly and energy conscious method.

In low ambient applications where outside air might not be desired (such as contaminated or excessively humid outdoor environments), your Carrier rooftop can operate to ambient temperatures down to -20°F (-29°C) using the recommended accessory Motormaster low ambient controller.

Winter start

Carrier's winter start kit extends the low ambient limit of your rooftop to 25°F (-4°C). The kit bypasses the low pressure switch, preventing nuisance tripping of the low pressure switch. Other low ambient precautions may still be prudent.

Application/Selection Option

Selection software by Carrier saves time by performing many of the steps above. Contact your Carrier sales representative for assistance.

Table 11 – COOLING CAPACITIES 2-STAGE COOLING 15 TONS

50TC–D17				AMBIENT TEMPERATURE											
				85			95			105			115		
				EAT (db)			EAT (db)			EAT (db)			EAT (db)		
				75	80	85	75	80	85	75	80	85	75	80	85
4500 CFM	EAT (wb)	58	TC	159.6	159.1	163.4	148.7	148.4	155.2	136.1	137.1	146.0	122.4	127.2	136.2
			SHC	132.6	149.6	163.4	127.0	143.9	155.2	120.7	137.1	146.0	113.9	127.2	136.2
		62	TC	173.9	173.6	173.3	163.1	162.6	162.2	150.5	150.2	149.9	136.8	136.2	136.9
			SHC	119.4	136.8	153.9	114.1	131.5	148.6	108.2	125.7	142.6	101.9	119.2	135.8
		67	TC	193.4	193.0	192.5	182.5	182.1	181.7	169.9	169.5	169.1	156.0	155.5	155.2
			SHC	102.3	119.7	137.0	97.3	114.8	132.3	91.7	109.4	126.9	85.7	103.5	121.1
		72	TC	213.7	213.2	212.6	203.5	203.0	202.5	191.0	190.5	189.9	177.1	176.6	176.1
			SHC	84.0	101.7	119.2	79.7	97.4	115.0	74.6	92.4	109.9	69.1	86.9	104.6
		76	TC	–	227.8	228.5	–	219.6	219.1	–	207.9	207.4	–	194.1	193.5
			SHC	–	89.9	103.7	–	82.5	100.2	–	78.1	95.8	–	73.0	97.2
5250 CFM	EAT (wb)	58	TC	168.7	168.5	176.4	157.0	158.2	167.7	143.9	148.2	158.0	129.5	137.5	147.4
			SHC	161.3	163.9	176.4	138.9	157.2	167.7	132.4	148.2	158.0	125.4	137.5	147.4
		62	TC	184.2	183.8	183.2	172.3	171.8	171.5	159.1	158.5	159.3	144.4	143.8	147.8
			SHC	129.4	149.6	168.9	123.9	144.0	163.5	117.9	137.9	156.4	111.4	131.3	147.8
		67	TC	204.7	204.0	203.5	193.1	192.6	192.2	179.7	179.2	178.7	164.8	164.3	163.6
			SHC	109.3	129.5	149.6	104.3	124.7	144.9	98.6	119.1	139.4	92.5	113.1	133.3
		72	TC	224.6	224.1	223.6	214.4	213.7	213.1	202.0	201.4	200.7	187.0	186.4	185.8
			SHC	87.5	107.9	128.2	83.4	103.9	124.3	78.6	99.2	119.6	72.9	93.6	114.1
		76	TC	–	239.1	239.6	–	230.6	230.1	–	218.4	217.7	–	204.4	203.7
			SHC	–	92.6	110.2	–	86.4	107.0	–	82.0	102.6	–	77.1	97.8
6000 CFM	EAT (wb)	58	TC	176.9	178.5	188.9	164.3	168.9	179.6	150.3	158.4	169.1	136.1	146.9	157.7
			SHC	157.4	178.5	188.9	151.1	168.9	179.6	144.3	158.4	169.1	136.1	146.9	157.7
		62	TC	193.2	192.7	192.2	180.4	179.7	180.7	166.2	165.6	170.1	150.5	150.0	158.1
			SHC	140.2	162.8	184.2	134.4	156.9	177.8	128.1	150.6	168.9	121.3	143.5	158.1
		67	TC	214.4	213.7	213.0	202.1	201.6	201.0	187.7	187.1	186.4	171.8	171.1	170.4
			SHC	117.3	140.3	163.0	112.1	135.3	158.2	106.2	129.4	152.2	99.8	123.1	145.9
		72	TC	234.9	234.6	234.2	224.0	223.3	222.5	210.9	210.1	209.3	194.9	194.1	193.4
			SHC	92.7	115.9	139.1	88.4	111.8	134.8	83.4	106.8	130.0	77.5	101.0	124.3
		76	TC	–	250.7	250.9	–	240.9	240.1	–	227.5	226.7	–	212.7	211.8
			SHC	–	95.7	118.9	–	92.1	115.3	–	87.4	110.8	–	82.4	105.8
6750 CFM	EAT (wb)	58	TC	182.5	187.4	198.5	169.3	177.4	188.7	156.0	166.4	177.8	142.9	154.4	165.9
			SHC	167.5	187.4	198.5	161.2	177.4	188.7	153.0	166.4	177.8	142.9	154.4	165.9
		62	TC	199.3	198.7	199.6	186.0	185.2	188.9	171.2	170.5	208.4	154.7	155.5	166.2
			SHC	148.6	173.7	196.6	142.8	167.6	188.9	136.4	161.1	208.4	115.2	152.6	166.2
		67	TC	220.4	219.6	218.8	208.2	207.4	206.6	193.2	192.5	191.7	176.8	176.1	175.2
			SHC	122.6	148.2	173.6	117.6	143.4	168.7	111.6	137.6	162.9	97.2	131.3	156.3
		72	TC	241.2	240.5	240.2	229.8	228.9	228.1	216.3	215.4	214.6	200.2	199.4	198.6
			SHC	95.1	120.9	146.6	90.8	116.8	142.6	85.8	111.9	137.8	80.0	106.2	118.0
		76	TC	–	257.2	256.7	–	246.6	245.9	–	233.0	232.1	–	217.6	216.7
			SHC	–	98.4	124.2	–	94.8	120.7	–	90.2	116.3	–	85.1	111.3
7500 CFM	EAT (wb)	58	TC	187.3	195.3	206.8	174.4	184.9	196.8	161.5	173.5	185.5	148.9	161.1	173.2
			SHC	177.5	195.3	206.8	169.9	184.9	196.8	161.5	173.5	185.5	148.9	161.1	173.2
		62	TC	204.3	203.5	207.1	190.6	189.9	197.1	175.1	175.4	185.7	158.4	161.2	173.5
			SHC	156.5	183.9	207.1	150.7	177.9	197.1	144.1	170.2	185.7	137.1	161.2	173.5
		67	TC	225.2	224.4	223.4	213.1	212.2	211.3	197.8	197.0	196.2	180.8	179.9	179.1
			SHC	127.5	155.8	183.5	122.8	151.2	178.9	116.8	145.5	173.1	110.3	139.0	166.3
		72	TC	246.1	245.5	244.9	234.5	233.6	232.8	220.6	219.7	218.6	204.7	203.7	202.7
			SHC	97.1	125.6	153.8	92.9	121.6	150.1	87.9	116.8	145.3	82.3	111.2	139.9
		76	TC	–	262.3	261.6	–	251.3	250.5	–	237.3	236.3	–	221.6	220.6
			SHC	–	100.9	129.2	–	97.3	125.8	–	92.8	121.5	–	87.7	116.6

LEGEND:

– – Do not operate
Cfm – Cubic feet per minute (supply air)
EAT(db) – Entering air temperature (dry bulb)
EAT(wb) – Entering air temperature (wet bulb)
SHC – Sensible heat capacity
TC – Total capacity

50TC017 (15 TONS) – UNIT WITH HUMIDI–MIZER IN SUBCOOLING MODE										
Temp (F) Air Entering Condenser (Edb)		AIR ENTERING EVAPORATOR – CFM/BF								
		4,500			6,000			7,500		
		Air Entering Evaporator –– Ewb (F)								
		72	67	62	72	67	62	72	67	62
75	TC	208.5	190.6	172.6	229.2	208.6	188.1	247.8	224.9	202.0
	SHC	94.0	114.5	135.0	104.5	125.2	145.9	113.0	133.8	154.6
	kW	13.42	13.05	12.70	13.60	13.21	12.80	13.82	13.36	13.15
85	TC	198.3	180.7	163.0	214.9	194.8	174.6	229.8	207.4	185.1
	SHC	74.1	99.6	125.1	85.2	110.9	136.7	94.1	120.0	145.9
	kW	14.79	14.42	14.10	14.97	14.58	14.20	15.19	14.73	14.51
95	TC	188.2	170.8	153.4	200.6	180.9	161.1	211.9	190.0	168.1
	SHC	54.4	84.8	115.3	65.9	96.7	127.5	75.1	106.2	137.2
	kW	16.23	15.86	15.50	16.41	16.02	15.60	16.63	16.17	15.95
105	TC	178.1	160.9	143.8	186.4	167.0	147.7	193.9	172.5	151.2
	SHC	34.6	70.0	105.4	46.5	82.4	118.2	56.1	92.3	128.5
	kW	17.47	17.10	16.80	17.65	17.26	16.90	17.87	17.41	17.25
115	TC	167.9	151.1	134.2	172.1	153.2	134.2	175.9	155.1	134.5
	SHC	14.8	55.2	95.6	27.2	68.1	109.0	37.1	78.5	119.8
	kW	18.87	18.50	18.20	19.05	18.66	18.30	19.27	18.81	18.55

50TC017 (15 TONS) – UNIT WITH HUMIDI–MIZER IN HOT GAS REHEAT MODE										
Temp (F) Air Ent Condenser (Edb)		AIR ENTERING EVAPORATOR – Ewb (F)								
		75 Dry Bulb			75 Dry Bulb			75 Dry Bulb		
		62.5 Wet Bulb			64 Wet Bulb			65.3 Wet Bulb		
		(50% Relative)			(56% Relative)			(60% Relative)		
		Air Entering Evaporator – Cfm								
		4,500	6,000	7,500	4,500	6,000	7,500	4,500	6,000	7,500
80	TC	80.10	85.50	91.30	82.70	90.90	97.10	86.00	95.40	100.50
	SHC	12.70	22.30	34.20	5.10	12.10	21.20	–2.10	4.20	10.50
	kW	12.44	12.67	12.78	12.55	12.88	13.10	12.65	13.02	13.12
75	TC	82.30	87.60	93.40	84.70	93.00	99.20	88.10	97.30	102.50
	SHC	14.30	24.20	36.00	6.70	13.70	23.10	–0.50	5.80	12.60
	kW	12.38	12.62	12.73	12.50	12.83	13.05	12.62	12.98	13.07
70	TC	84.40	89.60	94.70	87.00	95.10	101.30	90.30	99.50	104.60
	SHC	16.10	25.70	37.30	8.20	15.80	24.50	1.10	7.50	13.70
	kW	12.34	12.58	12.69	12.47	12.78	13.03	12.59	12.93	13.02
60	TC	88.50	93.90	99.80	91.20	99.40	105.50	94.40	103.70	108.90
	SHC	19.40	29.20	40.70	11.50	18.60	27.80	4.60	10.50	16.90
	kW	12.28	12.52	12.63	12.41	12.73	12.97	12.53	12.84	12.94
50	TC	92.80	98.10	104.80	95.40	103.60	110.50	98.80	108.00	113.90
	SHC	22.70	32.20	43.80	14.80	22.10	31.30	7.70	13.90	20.50
	kW	12.21	12.45	12.56	12.34	12.68	12.91	12.46	12.75	12.85
40	TC	97.10	102.50	108.50	99.60	108.00	114.30	103.00	112.40	117.70
	SHC	26.00	35.40	46.90	17.90	25.30	34.40	10.80	17.10	23.80
	kW	12.14	12.38	12.49	12.27	12.60	12.84	12.40	12.70	12.80

LEGEND

Edb – Entering Dry–Bulb
Ewb – Entering Wet–Bulb
kW – Compressor Motor Power Input
ldb – Leaving Dry–Bulb
lwb – Leaving Wet–Bulb
SHC – Sensible Heat Capacity (1000 Btuh) Gross
TC – Total Capacity (1000 Btuh) Gross

NOTES:

1. Direct interpolation is permissible. Do not extrapolate.
2. The following formulas may be used:

$$t_{ldb} = t_{edb} - \frac{\text{sensible capacity (Btuh)}}{1.10 \times \text{cfm}}$$

t_{lwb} = Wet–bulb temperature corresponding to enthalpy of air leaving evaporator coil (h_{lwb})

$$h_{lwb} = h_{ewb} - \frac{\text{total capacity (Btuh)}}{4.5 \times \text{cfm}}$$

Where: h_{ewb} = Enthalpy of air entering evaporator coil

50TC

Table 13 – COOLING CAPACITIES 2-STAGE COOLING 17.5 TONS

50TC*D20				AMBIENT TEMPERATURE											
				85			95			105			115		
				EAT (db)			EAT (db)			EAT (db)			EAT (db)		
				75	80	85	75	80	85	75	80	85	75	80	85
5250 CFM	EAT (wb)	58	TC	180.4	185.6	196.3	167.7	176.1	186.9	154.7	165.3	176.6	142.2	153.6	164.9
			SHC	166.5	185.6	196.3	160.6	176.1	186.9	152.7	165.3	176.6	142.2	153.6	164.9
		62	TC	196.2	195.5	196.9	183.6	182.9	187.2	169.3	168.7	176.9	153.4	154.1	165.2
			SHC	146.8	172.1	194.7	141.4	166.6	187.2	135.4	160.5	176.9	128.6	152.5	165.2
		67	TC	216.7	215.9	215.2	204.9	204.1	203.1	190.6	189.7	189.0	174.8	174.0	173.3
			SHC	120.0	146.1	171.8	115.4	141.5	167.1	109.8	136.1	161.7	103.8	130.2	155.6
		72	TC	237.4	236.8	236.0	226.0	225.1	224.2	212.8	211.9	211.0	197.3	196.4	195.5
			SHC	92.0	118.3	144.3	87.8	114.3	140.4	83.0	109.6	135.8	77.6	104.2	130.6
		76	TC	–	252.9	253.0	–	242.5	241.6	–	229.1	228.2	–	214.1	213.1
			SHC	–	95.1	121.4	–	91.7	118.0	–	87.3	113.8	–	82.5	107.1
6125 CFM	EAT (wb)	58	TC	188.8	198.5	209.3	176.5	188.2	200.2	164.5	176.7	189.0	151.9	164.2	176.7
			SHC	180.4	198.5	209.3	174.4	188.2	200.2	164.5	176.7	189.0	151.9	164.2	176.7
		62	TC	205.2	204.6	209.6	191.8	191.5	200.4	176.6	177.6	189.2	159.9	164.2	176.9
			SHC	159.9	188.7	209.6	154.2	183.0	200.4	147.9	174.8	189.2	141.0	164.2	176.9
		67	TC	225.5	224.5	223.5	213.5	212.5	211.7	199.1	198.3	197.4	182.3	181.4	180.9
			SHC	128.3	158.4	187.8	123.8	154.1	183.5	118.4	148.9	178.1	112.2	142.7	171.6
		72	TC	245.6	245.3	244.6	234.7	233.6	232.6	220.9	219.9	218.8	205.5	204.4	203.4
			SHC	95.4	125.9	155.7	91.7	122.2	152.4	86.9	117.7	148.1	81.7	112.5	143.1
		76	TC	–	262.0	261.2	–	250.7	250.1	–	237.3	236.2	–	221.6	220.6
			SHC	–	99.5	129.4	–	95.9	126.2	–	91.8	122.4	–	87.0	117.8
7000 CFM	EAT (wb)	58	TC	197.4	209.8	221.3	186.1	199.1	211.7	173.8	186.9	200.1	160.3	173.5	186.9
			SHC	196.8	209.8	221.3	186.1	199.1	211.7	173.8	186.9	200.1	160.3	173.5	186.9
		62	TC	212.7	212.4	221.5	198.4	199.8	212.0	182.3	186.9	200.3	164.7	173.8	187.1
			SHC	173.4	205.1	221.5	167.4	197.4	212.0	160.8	186.8	200.3	153.4	173.8	187.1
		67	TC	233.7	232.5	231.4	220.8	219.8	218.9	205.6	204.5	204.1	187.8	186.8	188.0
			SHC	138.0	172.0	205.0	133.4	167.6	200.4	127.8	162.0	194.4	121.3	155.6	185.6
		72	TC	254.3	253.3	252.8	242.7	241.5	240.3	228.0	226.8	225.7	211.8	210.6	209.3
			SHC	101.3	135.4	169.2	97.3	131.8	165.9	92.3	127.2	161.5	86.9	121.8	156.3
		76	TC	–	270.7	269.9	–	259.0	258.1	–	245.0	243.6	–	228.5	227.1
			SHC	–	106.1	140.0	–	102.4	136.5	–	98.2	132.7	–	93.2	127.9
7875 CFM	EAT (wb)	58	TC	205.0	217.2	229.1	193.4	206.9	219.3	180.6	194.3	207.9	166.6	180.5	194.5
			SHC	205.0	217.2	229.1	193.4	206.9	219.3	180.6	194.3	207.9	166.6	180.5	194.5
		62	TC	216.7	217.4	229.4	202.5	207.1	219.6	185.9	194.5	208.4	168.4	180.7	194.7
			SHC	183.9	217.4	229.4	178.2	207.1	219.6	171.5	194.5	208.4	141.2	180.7	194.7
		67	TC	237.8	236.7	235.7	224.7	223.5	223.0	209.5	208.3	209.2	191.5	190.3	195.0
			SHC	144.6	182.4	219.3	140.3	178.2	213.7	134.9	172.7	205.9	113.6	166.2	195.0
		72	TC	258.6	257.5	256.5	246.8	245.7	244.3	231.8	230.5	229.2	215.3	213.9	212.5
			SHC	103.9	141.8	179.2	100.0	138.3	176.1	95.1	133.9	172.1	89.7	128.6	142.0
		76	TC	–	275.4	274.2	–	262.7	261.8	–	248.7	247.6	–	231.9	230.5
			SHC	–	109.5	147.0	–	105.7	143.6	–	101.5	139.9	–	96.6	135.4
8750 CFM	EAT (wb)	58	TC	211.3	223.6	235.9	199.7	213.4	225.7	186.4	200.7	214.3	172.1	186.5	200.9
			SHC	211.3	223.6	235.9	199.7	213.4	225.7	186.4	200.7	214.3	172.1	186.5	200.9
		62	TC	220.0	223.7	236.3	206.0	213.6	226.1	189.3	200.9	214.5	172.2	186.7	201.2
			SHC	194.0	223.7	236.3	188.5	213.6	226.1	181.3	200.9	214.5	172.2	186.7	201.2
		67	TC	241.1	240.1	239.7	227.9	226.6	226.9	212.7	211.4	214.9	194.4	193.0	201.4
			SHC	151.0	192.1	230.2	146.9	188.3	225.2	141.6	182.9	214.8	135.3	176.3	201.4
		72	TC	262.2	261.0	259.7	250.0	248.8	247.7	235.0	233.5	232.1	218.1	216.6	215.2
			SHC	106.5	148.1	189.0	102.5	144.5	186.0	97.8	140.4	182.1	92.4	135.3	177.1
		76	TC	–	278.9	277.4	–	266.0	264.8	–	251.5	250.6	–	234.7	233.0
			SHC	–	112.7	153.7	–	108.9	150.4	–	104.7	146.7	–	100.0	142.4

LEGEND:

– – Do not operate
Cfm – Cubic feet per minute (supply air)
EAT(db) – Entering air temperature (dry bulb)
EAT(wb) – Entering air temperature (wet bulb)
SHC – Sensible heat capacity
TC – Total capacity

50TC020 (17.5 TONS) – UNIT WITH HUMIDI–MIZER IN SUBCOOLING MODE										
Temp (F) Air Ent Condenser (Edb)		AIR ENTERING EVAPORATOR – CFM/BF								
		5,250			7,000			8,750		
		Air Entering Evaporator –– Ewb (F)								
		72	67	62	72	67	62	72	67	62
75	TC	218.7	199.6	180.5	241.4	219.4	197.4	261.7	237.2	212.7
	SHC	99.9	123.9	147.8	112.7	136.9	161.1	122.9	147.3	171.7
	kW	11.81	11.56	11.20	13.81	13.48	13.16	14.82	14.58	14.16
85	TC	206.6	187.9	169.1	224.9	203.4	181.9	241.3	217.3	193.4
	SHC	78.9	108.4	137.9	92.2	122.1	152.0	103.0	133.1	163.3
	kW	13.18	12.53	12.53	15.18	14.85	14.52	16.21	15.85	15.54
95	TC	194.7	176.2	157.8	208.4	187.4	166.4	220.8	197.4	174.1
	SHC	57.8	92.9	128.0	71.7	107.3	142.9	83.0	118.9	154.9
	kW	14.56	14.21	13.88	16.56	16.21	15.87	17.56	17.22	16.01
105	TC	182.7	164.5	146.4	191.9	171.4	150.8	200.3	177.6	154.8
	SHC	36.8	77.4	118.1	51.3	92.5	133.8	63.0	104.7	146.4
	kW	15.93	15.58	15.20	17.94	17.58	17.22	18.95	18.59	18.24
115	TC	170.6	152.8	135.0	175.4	155.4	135.3	179.8	157.7	135.5
	SHC	15.7	62.0	108.2	30.8	77.8	124.7	43.0	90.5	128.0
	kW	17.31	16.95	16.58	19.32	18.95	18.58	20.32	19.96	19.59

50TC020 (17.5 TONS) – UNIT WITH HUMIDI–MIZER IN HOT GAS REHEAT MODE										
Temp (F) Air Ent Condenser (Edb)		AIR ENTERING EVAPORATOR – Ewb (F)								
		75 Dry Bulb			75 Dry Bulb			75 Dry Bulb		
		62.5 Wet Bulb			64 Wet Bulb			65.3 Wet Bulb		
		(50% Relative)			(56% Relative)			(60% Relative)		
		Air Entering Evaporator – Cfm								
		5,250	7,000	8,750	5,250	7,000	8,750	5,250	7,000	8,750
80	TC	82.20	90.50	92.40	86.70	96.40	97.80	91.60	99.80	101.20
	SHC	18.20	29.40	41.60	8.60	17.20	27.50	0.50	9.30	13.20
	kW	12.64	12.73	12.88	12.78	13.06	13.15	12.96	13.07	13.22
75	TC	84.40	92.70	94.40	88.80	98.60	99.70	93.70	102.00	103.40
	SHC	19.70	31.30	43.50	10.10	18.80	29.20	12.10	10.80	15.30
	kW	12.60	12.71	12.85	12.75	13.02	13.12	12.93	13.03	13.19
70	TC	86.70	94.90	96.60	91.00	100.70	102.00	95.90	104.10	105.40
	SHC	21.30	32.80	44.80	11.60	20.40	30.70	3.80	12.30	16.50
	kW	12.56	12.66	12.82	12.70	12.99	13.08	12.89	13.00	13.14
60	TC	90.90	99.10	100.80	95.20	105.00	106.30	100.20	108.30	109.70
	SHC	24.80	36.00	48.20	14.90	23.90	35.90	7.20	15.60	19.60
	kW	12.49	12.60	12.75	12.64	12.92	13.02	12.83	12.93	13.09
50	TC	95.00	103.40	105.10	99.50	109.40	110.50	104.40	112.50	113.90
	SHC	28.10	39.30	51.30	18.20	27.20	37.40	10.30	18.90	23.20
	kW	12.43	12.53	12.67	12.57	12.86	12.95	12.76	12.87	13.02
40	TC	99.20	107.70	109.30	103.70	113.70	114.70	108.60	116.70	118.10
	SHC	31.40	42.50	54.40	21.30	30.40	40.50	13.40	22.00	26.50
	kW	12.35	12.45	12.61	12.50	12.79	12.87	12.68	12.80	12.94

LEGEND

Edb – Entering Dry–Bulb
Ewb – Entering Wet–Bulb
kW – Compressor Motor Power Input
ldb – Leaving Dry–Bulb
lwb – Leaving Wet–Bulb
SHC – Sensible Heat Capacity (1000 Btuh) Gross
TC – Total Capacity (1000 Btuh) Gross

NOTES:

1. Direct interpolation is permissible. Do not extrapolate.
2. The following formulas may be used:

$$t_{ldb} = t_{edb} - \frac{\text{sensible capacity (Btuh)}}{1.10 \times \text{cfm}}$$

t_{lwb} = Wet–bulb temperature corresponding to enthalpy of air leaving evaporator coil (h_{lwb})

$$h_{lwb} = h_{ewb} - \frac{\text{total capacity (Btuh)}}{4.5 \times \text{cfm}}$$

Where: h_{ewb} = Enthalpy of air entering evaporator coil

Table 15 – COOLING CAPACITIES 2-STAGE COOLING 20 TONS

50TC–D24				AMBIENT TEMPERATURE											
				85			95			105			115		
				EA (db)			EA (db)			EA (db)			EA (db)		
				75	80	85	75	80	85	75	80	85	75	80	85
6000 CFM	EAT (wb)	58	TC	213.1	217.2	228.7	199.9	207.5	219.4	184.8	195.8	208.4	169.6	182.6	195.6
			SHC	194.3	217.2	228.7	188.0	207.5	219.4	179.0	195.8	208.4	169.6	182.6	195.6
		62	TC	230.0	229.4	230.4	217.5	217.0	219.7	202.5	201.9	208.8	184.9	184.9	195.9
			SHC	170.0	199.9	225.9	164.6	194.5	219.7	158.3	187.8	208.8	150.9	178.7	195.9
		67	TC	251.5	251.1	250.6	239.4	238.7	238.1	225.4	224.7	224.0	208.8	208.2	207.4
			SHC	137.5	168.1	198.4	132.9	163.4	193.7	127.5	158.1	188.2	121.1	151.9	181.9
		72	TC	274.0	273.8	273.5	262.3	261.7	261.0	248.2	247.4	246.6	232.2	231.3	230.5
			SHC	104.3	135.1	165.6	100.1	130.9	161.4	95.1	125.9	156.6	89.6	120.5	151.3
		76	TC	–	292.9	292.2	–	280.5	279.9	–	266.3	265.6	–	250.6	249.8
			SHC	–	108.1	138.6	–	104.1	134.9	–	99.6	130.4	–	94.6	125.5
7000 CFM	EAT (wb)	58	TC	220.8	229.7	241.7	208.4	219.7	232.2	194.3	208.1	221.0	180.1	194.2	207.9
			SHC	211.0	229.7	241.7	203.1	219.7	232.2	194.3	208.1	221.0	180.1	194.2	207.9
		62	TC	237.8	237.3	241.9	225.1	224.6	232.3	209.6	210.2	221.3	191.3	196.0	208.2
			SHC	183.3	217.8	241.9	178.2	212.1	232.3	171.8	203.8	221.3	164.3	196.0	208.2
		67	TC	260.0	259.2	258.5	247.2	246.4	245.7	232.7	231.9	231.7	215.8	215.0	214.3
			SHC	146.0	181.0	215.7	141.3	176.5	211.2	136.0	171.3	206.3	129.8	165.3	199.4
		72	TC	283.3	282.5	281.8	270.6	269.8	268.9	255.9	255.0	254.1	240.0	238.9	238.0
			SHC	107.9	143.2	178.1	103.6	139.0	174.1	98.6	134.2	169.5	93.2	129.0	164.4
		76	TC	–	302.3	301.6	–	289.1	288.4	–	274.4	273.6	–	257.9	256.8
			SHC	–	112.3	147.5	–	108.3	143.7	–	103.9	139.4	–	98.9	134.5
8000 CFM	EAT (wb)	58	TC	232.1	243.6	256.1	219.8	233.4	246.0	206.9	221.3	234.5	192.1	206.8	221.2
			SHC	227.5	243.6	256.1	219.8	233.4	246.0	206.9	221.3	234.5	192.1	206.8	221.2
		62	TC	247.8	247.1	256.4	234.7	235.5	246.2	218.7	221.1	234.7	199.5	207.0	221.4
			SHC	199.5	236.7	256.4	194.3	229.1	246.2	187.8	221.1	234.7	179.9	207.0	221.4
		67	TC	270.2	269.3	268.3	257.0	256.1	255.2	242.1	241.0	240.3	224.5	223.5	223.1
			SHC	157.6	197.1	235.6	152.7	192.6	231.0	147.3	187.2	225.3	141.0	181.0	215.6
		72	TC	294.1	293.1	292.2	280.7	279.7	278.4	265.9	264.7	263.8	248.9	247.6	246.6
			SHC	114.8	154.6	193.9	110.3	150.4	190.0	105.4	145.6	185.5	99.7	140.1	180.2
		76	TC	–	313.1	312.3	–	299.3	298.2	–	283.8	282.8	–	266.7	265.4
			SHC	–	120.2	159.6	–	116.0	155.9	–	111.4	151.5	–	106.2	146.6
9000 CFM	EAT (wb)	58	TC	238.5	252.5	266.0	226.8	241.6	255.6	213.1	228.2	243.0	197.5	213.0	229.2
			SHC	238.5	252.5	266.0	226.8	241.6	255.6	213.1	228.2	243.0	197.5	213.0	229.2
		62	TC	253.0	254.1	266.3	238.6	241.6	255.7	221.0	228.4	243.3	201.1	213.2	229.4
			SHC	211.9	249.1	266.3	206.2	241.6	255.7	199.2	228.4	243.3	164.2	213.2	229.4
		67	TC	276.9	275.8	274.8	263.0	261.8	261.0	246.5	245.2	246.6	228.2	225.9	229.6
			SHC	165.6	209.9	252.2	160.7	205.1	247.0	154.9	199.3	238.5	132.3	192.7	229.6
		72	TC	302.2	301.0	299.7	287.9	286.6	285.4	272.3	270.9	269.6	254.3	252.9	251.6
			SHC	118.2	162.8	206.8	113.5	158.4	202.9	108.5	153.4	198.0	102.7	147.8	165.1
		76	TC	–	322.0	320.8	–	307.7	306.1	–	291.4	289.9	–	275.1	272.5
			SHC	–	124.5	168.7	–	120.4	164.9	–	115.6	160.5	–	110.9	155.3
10,000 CFM	EAT (wb)	58	TC	245.7	259.8	273.9	233.8	248.7	263.2	219.8	235.3	250.5	203.7	219.8	236.5
			SHC	245.7	259.8	273.9	233.8	248.7	263.2	219.8	235.3	250.5	203.7	219.8	236.5
		62	TC	256.8	260.7	274.2	242.2	249.0	263.3	224.6	235.6	250.6	205.6	220.0	236.8
			SHC	223.8	258.4	274.2	218.1	249.0	263.3	211.0	235.6	250.6	199.3	220.0	236.8
		67	TC	280.8	279.6	266.3	266.6	265.4	265.8	249.9	248.6	251.0	231.4	229.8	237.3
			SHC	173.2	221.8	266.3	168.3	217.0	258.7	162.6	211.4	250.7	156.4	204.7	237.3
		72	TC	306.4	305.0	274.8	292.1	290.6	289.3	276.0	274.3	273.0	257.5	256.0	254.6
			SHC	121.2	170.1	252.2	116.6	165.9	214.8	111.5	161.0	210.0	105.7	155.4	204.5
		76	TC	–	326.2	299.7	–	311.4	310.0	–	295.2	293.2	–	277.0	275.3
			SHC	–	128.2	206.8	–	124.0	172.9	–	119.5	168.9	–	114.3	163.8

LEGEND:

– – Do not operate
Cfm – Cubic feet per minute (supply air)
EAT(db) – Entering air temperature (dry bulb)
EAT(wb) – Entering air temperature (wet bulb)
SHC – Sensible heat capacity
TC – Total capacity

50TC024 (20 TONS) – UNIT WITH HUMIDI–MIZER IN SUBCOOLING MODE										
Temp (F) Air Ent Condenser (Edb)		AIR ENTERING EVAPORATOR – CFM/BF								
		6,000			8,000			10,000		
		Air Entering Evaporator –– Ewb (F)								
		72	67	62	72	67	62	72	67	62
75	TC	263.0	240.4	217.7	301.0	274.0	246.9	336.9	305.6	274.4
	SHC	125.3	151.6	178.0	144.4	171.1	198.0	160.0	186.9	213.9
	kW	15.63	15.20	14.65	15.91	15.62	14.98	16.26	15.92	15.21
85	TC	248.2	226.1	204.0	279.2	252.9	226.6	308.4	278.2	248.0
	SHC	98.9	131.7	164.5	118.6	152.0	185.3	134.6	168.4	202.2
	kW	17.50	17.04	16.50	17.74	17.51	16.75	18.08	17.73	17.03
95	TC	233.4	211.8	190.2	257.3	231.8	206.4	279.8	250.7	221.5
	SHC	72.4	111.8	151.1	92.7	132.8	172.9	109.3	149.9	190.6
	kW	19.36	18.96	18.35	19.61	19.37	18.67	20.02	19.62	18.97
105	TC	218.6	197.5	176.5	235.4	210.7	186.1	251.3	223.2	195.1
	SHC	46.0	91.8	137.7	66.9	113.6	160.4	83.9	131.4	178.9
	kW	21.23	20.76	20.18	21.53	21.22	20.52	21.91	21.52	20.77
115	TC	203.7	183.3	162.8	213.5	189.7	165.8	222.7	195.7	168.7
	SHC	19.5	71.9	124.2	41.0	94.4	147.9	58.5	112.9	157.2
	kW	23.02	22.58	22.02	23.42	23.02	22.38	23.73	23.41	22.57

50TC

50TC024 (20 TONS) – UNIT WITH HUMIDI–MIZER IN HOT GAS REHEAT MODE										
Temp (F) Air Ent Condenser (Edb)		AIR ENTERING EVAPORATOR – Ewb (F)								
		75 Dry Bulb			75 Dry Bulb			75 Dry Bulb		
		62.5 Wet Bulb			64 Wet Bulb			65.3 Wet Bulb		
		(50% Relative)			(56% Relative)			(60% Relative)		
		Air Entering Evaporator – Cfm								
		6,000	8,000	10,000	6,000	8,000	10,000	6,000	8,000	10,000
80	TC	91.50	100.80	109.50	95.80	105.70	112.40	102.30	110.80	118.60
	SHC	12.30	31.20	44.50	0.90	15.10	25.70	–6.50	3.60	13.90
	kW	14.82	15.01	15.24	15.35	15.45	15.52	15.56	15.65	15.73
75	TC	94.00	103.40	112.00	98.70	108.10	115.10	104.70	113.10	121.10
	SHC	13.60	32.40	45.70	2.00	16.00	26.60	–5.60	4.70	15.10
	kW	14.90	15.07	15.33	15.43	15.56	15.64	15.69	15.77	15.85
70	TC	96.50	106.00	114.30	100.90	110.60	117.20	107.20	115.80	123.50
	SHC	14.50	33.20	45.70	3.30	17.30	28.00	–4.00	5.90	16.20
	kW	14.97	15.17	15.41	15.50	15.66	15.75	15.80	15.87	15.94
60	TC	101.80	111.30	119.30	106.20	115.60	122.20	112.60	119.40	128.00
	SHC	16.70	35.50	48.60	5.60	19.40	30.30	–1.80	8.20	18.50
	kW	15.14	15.32	15.58	15.66	15.88	15.97	16.05	16.10	16.19
50	TC	107.20	116.40	124.30	111.50	120.70	127.30	117.70	125.20	132.90
	SHC	18.60	37.60	50.70	8.00	22.00	32.70	0.50	10.50	21.00
	kW	15.27	15.46	15.76	15.81	16.10	16.23	16.27	16.34	16.41
40	TC	112.20	121.80	129.20	116.60	125.70	132.00	123.20	130.00	138.00
	SHC	21.80	39.50	52.90	10.20	24.40	35.20	2.90	13.00	23.40
	kW	15.42	15.63	15.93	15.96	16.32	16.44	16.52	16.57	16.65

LEGEND

Edb – Entering Dry–Bulb
Ewb – Entering Wet–Bulb
kW – Compressor Motor Power Input
ldb – Leaving Dry–Bulb
lwb – Leaving Wet–Bulb
SHC – Sensible Heat Capacity (1000 Btuh) Gross
TC – Total Capacity (1000 Btuh) Gross

NOTES:

1. Direct interpolation is permissible. Do not extrapolate.
2. The following formulas may be used:

$$t_{ldb} = t_{edb} - \frac{\text{sensible capacity (Btuh)}}{1.10 \times \text{cfm}}$$

t_{lwb} = Wet–bulb temperature corresponding to enthalpy of air leaving evaporator coil (h_{lwb})

$$h_{lwb} = h_{ewb} - \frac{\text{total capacity (Btuh)}}{4.5 \times \text{cfm}}$$

Where: h_{ewb} = Enthalpy of air entering evaporator coil

Table 17 – COOLING CAPACITIES 2-STAGE COOLING 25 TONS

50TC–D28				AMBIENT TEMPERATURE											
				85			95			105			115		
				EA (db)			EA (db)			EA (db)			EA (db)		
				75	80	85	75	80	85	75	80	85	75	80	85
7,500 CFM	EAT (wb)	58	TC	257.3	266.5	279.6	247.5	255.4	269.0	231.5	243.3	257.2	214.3	229.2	243.7
			SHC	247.5	266.5	279.6	231.1	255.4	269.0	223.5	243.3	257.2	213.2	229.2	243.7
		62	TC	281.4	280.5	280.6	267.5	267.0	269.3	251.3	251.0	257.6	232.7	232.5	244.1
			SHC	208.2	244.0	278.0	202.3	238.4	269.3	195.8	231.5	257.6	188.1	223.4	244.1
		67	TC	307.4	306.4	305.7	293.0	292.2	291.4	276.9	276.2	275.4	259.7	259.2	258.8
			SHC	168.7	205.7	242.3	163.2	200.3	236.9	157.1	194.4	230.7	150.6	188.4	224.8
		72	TC	333.9	333.2	332.5	320.1	319.3	318.6	304.5	303.7	302.7	287.2	285.3	284.5
			SHC	128.1	165.4	202.3	123.1	160.6	197.8	117.6	155.1	192.5	111.5	149.0	186.6
		76	TC	–	356.0	355.2	–	342.0	341.2	–	326.0	325.2	–	308.0	307.4
			SHC	–	132.7	169.9	–	128.1	165.6	–	123.0	160.7	–	117.3	154.5
8,750 CFM	EAT (wb)	58	TC	269.8	280.2	294.4	255.3	268.9	283.2	241.1	256.1	270.7	225.5	241.3	257.3
			SHC	257.9	280.2	294.4	250.4	268.9	283.2	241.1	256.1	270.7	225.5	241.3	257.3
		62	TC	289.9	289.3	294.6	275.3	274.9	283.6	258.7	258.2	271.0	238.8	241.6	257.6
			SHC	224.2	265.0	294.6	218.6	258.6	283.6	212.0	251.7	271.0	203.9	241.6	257.6
		67	TC	316.2	315.7	314.5	301.7	300.8	299.8	285.1	284.2	283.4	266.7	266.0	265.2
			SHC	179.0	221.6	263.1	173.5	216.4	257.9	167.5	210.5	251.9	161.0	204.5	245.1
		72	TC	343.7	342.7	341.6	315.3	327.9	327.0	313.1	311.4	310.4	294.3	293.2	292.2
			SHC	132.4	175.4	217.7	127.6	170.7	213.3	122.0	165.3	208.3	115.6	159.2	202.5
		76	TC	–	366.0	364.9	–	351.2	350.1	–	334.2	333.2	–	315.4	314.3
			SHC	–	138.0	180.7	–	133.4	176.5	–	128.2	171.6	–	122.5	166.1
10,000 CFM	EAT (wb)	58	TC	277.1	291.8	306.8	264.9	280.2	295.3	251.2	267.0	282.3	235.1	252.2	268.1
			SHC	275.3	291.8	306.8	264.9	280.2	295.3	251.2	267.0	282.3	235.1	252.2	268.1
		62	TC	296.8	296.0	307.2	281.8	281.8	295.6	264.7	267.1	282.6	244.9	252.4	268.4
			SHC	239.8	283.9	307.2	234.0	276.8	295.6	227.5	267.1	282.6	219.4	252.4	268.4
		67	TC	323.5	322.6	321.4	308.5	307.4	306.5	291.3	290.2	289.3	272.5	271.5	270.8
			SHC	188.8	236.9	282.9	183.5	231.9	277.4	177.5	226.1	271.2	171.2	219.7	264.3
		72	TC	351.8	350.5	349.2	336.6	335.4	334.1	319.7	318.3	317.1	300.2	298.9	297.8
			SHC	136.6	185.1	232.8	131.6	180.4	228.6	126.0	175.1	223.7	119.7	169.1	217.9
		76	TC	–	374.2	372.8	–	358.6	357.3	–	340.9	339.7	–	321.3	320.1
			SHC	–	143.1	191.2	–	138.5	187.1	–	133.3	182.3	–	127.6	176.8
11,250 CFM	EAT (wb)	58	TC	285.8	301.5	317.0	273.8	289.0	305.1	259.8	276.1	291.7	244.0	260.9	277.4
			SHC	285.8	301.5	317.0	273.8	289.0	305.1	259.8	276.1	291.7	244.0	260.9	277.4
		62	TC	302.2	302.3	317.4	286.3	289.5	305.4	269.6	276.4	208.4	249.3	261.1	277.6
			SHC	254.3	300.2	317.4	245.8	289.5	305.4	242.1	276.4	208.4	201.5	261.1	277.6
		67	TC	328.7	327.7	326.7	313.5	312.2	311.1	296.0	294.8	294.3	277.5	275.7	277.9
			SHC	197.9	251.1	301.0	192.8	246.4	295.4	187.0	240.4	288.0	160.9	234.6	277.9
		72	TC	357.4	355.9	354.4	341.8	340.3	339.0	324.4	322.8	321.6	304.8	303.2	302.0
			SHC	140.2	193.9	246.7	135.2	189.4	242.8	129.7	184.3	238.2	123.5	178.4	198.1
		76	TC	–	379.7	378.2	–	363.9	362.3	–	345.7	344.2	–	327.5	324.0
			SHC	–	147.6	200.8	–	143.1	196.9	–	138.0	192.3	–	132.9	187.1
12,500 CFM	EAT (wb)	58	TC	293.7	309.8	325.6	280.3	297.3	313.5	267.0	283.5	299.8	250.8	268.3	284.8
			SHC	293.7	309.8	325.6	280.3	297.3	313.5	267.0	283.5	299.8	250.8	268.3	284.8
		62	TC	310.5	310.2	326.1	290.7	297.6	313.9	273.7	283.7	300.1	253.1	268.5	285.0
			SHC	264.9	310.1	326.1	262.1	297.6	313.9	255.7	283.7	300.1	246.9	268.5	285.0
		67	TC	333.1	331.7	330.9	317.5	316.2	315.9	299.8	298.7	300.3	280.7	279.6	285.5
			SHC	206.6	264.7	317.6	201.9	260.2	311.0	196.2	254.9	300.3	190.0	248.1	285.5
		72	TC	362.1	360.3	358.7	346.0	344.3	343.0	328.2	326.6	325.1	308.4	306.6	305.3
			SHC	143.6	202.4	260.2	138.7	198.1	256.5	133.2	193.2	252.1	127.1	187.5	246.5
		76	TC	–	384.3	382.5	–	368.1	366.3	–	349.5	347.8	–	331.0	328.7
			SHC	–	151.9	210.1	–	147.5	206.4	–	142.5	201.9	–	137.4	195.2

LEGEND:

– – Do not operate
Cfm – Cubic feet per minute (supply air)
EAT(db) – Entering air temperature (dry bulb)
EAT(wb) – Entering air temperature (wet bulb)
SHC – Sensible heat capacity
TC – Total capacity

50TC028 (25 TONS) – UNIT WITH HUMIDI–MIZER IN SUBCOOLING MODE										
Temp (F) Air Ent Condenser (Edb)		AIR ENTERING EVAPORATOR – CFM/BF								
		7,500			10,000			12,500		
		Air Entering Evaporator –– Ewb (F)								
		72	67	62	72	67	62	72	67	62
75	TC	335.3	305.5	275.8	368.3	334.4	300.5	398.1	360.5	322.9
	SHC	149.6	181.7	213.7	172.8	205.5	238.2	191.7	224.9	258.2
	kW	19.50	18.70	17.70	19.50	18.70	17.70	19.70	18.80	17.90
85	TC	316.3	287.0	257.7	341.5	308.4	275.3	364.3	327.8	291.2
	SHC	120.8	160.5	200.2	144.6	185.2	225.8	164.0	205.4	246.7
	kW	21.90	21.30	20.10	22.30	21.30	20.30	22.50	21.70	20.60
95	TC	297.3	268.5	239.6	314.7	282.4	250.1	330.5	295.0	259.5
	SHC	92.1	139.4	186.7	116.4	164.9	213.5	136.3	185.8	235.3
	kW	24.30	23.50	22.50	24.40	23.50	22.60	24.40	23.60	22.50
105	TC	278.2	249.9	221.6	287.9	256.4	224.9	296.7	262.3	227.8
	SHC	63.3	118.2	173.2	88.3	144.7	201.1	108.7	166.3	223.9
	kW	26.70	26.00	25.00	27.30	26.00	25.00	27.30	26.10	25.10
115	TC	259.2	231.4	203.5	261.1	230.4	199.7	262.9	229.5	196.1
	SHC	34.5	97.1	159.7	60.1	124.4	188.7	81.0	146.7	191.2
	kW	28.70	28.00	27.10	29.30	28.10	26.90	29.10	27.90	27.20

50TC

50TC028 (25 TONS) – UNIT WITH HUMIDI–MIZER IN HOT GAS REHEAT MODE										
Temp (F) Air Ent Condenser (Edb)		AIR ENTERING EVAPORATOR – Ewb (F)								
		75 Dry Bulb			75 Dry Bulb			75 Dry Bulb		
		62.5 Wet Bulb			64 Wet Bulb			65.3 Wet Bulb		
		(50% Relative)			(56% Relative)			(60% Relative)		
		Air Entering Evaporator – Cfm								
		7,500	10,000	12,500	7,500	10,000	12,500	7,500	10,000	12,500
80	TC	132.40	136.80	148.40	138.20	142.40	154.60	144.30	146.40	162.50
	SHC	37.80	61.50	85.50	21.80	44.40	52.40	16.10	32.10	48.90
	kW	17.90	18.15	18.21	18.05	18.33	18.43	18.26	18.55	18.62
75	TC	138.00	142.20	154.10	143.50	148.00	160.30	148.90	151.00	167.10
	SHC	44.20	68.00	91.80	28.10	51.50	58.80	22.70	38.20	56.00
	kW	17.77	18.00	18.07	17.92	18.19	18.29	18.14	18.40	18.48
70	TC	143.80	148.10	160.00	149.30	154.00	165.90	155.50	157.60	173.80
	SHC	50.50	73.80	98.10	34.20	56.50	65.30	28.30	44.00	62.30
	kW	17.63	17.86	17.93	17.78	18.04	18.14	18.03	18.26	18.34
60	TC	154.80	159.50	171.10	160.20	165.20	177.20	166.70	168.80	185.10
	SHC	63.10	84.50	110.10	46.50	69.50	75.70	41.40	56.50	74.30
	kW	17.35	17.58	17.65	17.50	17.76	17.85	17.70	17.97	18.04
50	TC	166.30	170.50	181.20	171.30	176.40	188.40	178.00	180.00	196.40
	SHC	75.80	96.50	122.20	58.30	79.80	87.80	53.70	69.10	85.90
	kW	17.06	17.30	17.37	17.22	17.46	17.56	17.42	17.69	17.76
40	TC	177.50	181.70	192.30	182.40	187.60	199.70	189.30	191.20	207.70
	SHC	85.70	109.80	134.30	71.50	92.30	100.50	66.10	79.50	97.90
	kW	16.76	17.01	17.09	16.93	17.18	17.28	17.14	17.41	17.47

LEGEND

Edb – Entering Dry–Bulb
Ewb – Entering Wet–Bulb
kW – Compressor Motor Power Input
ldb – Leaving Dry–Bulb
lwb – Leaving Wet–Bulb
SHC – Sensible Heat Capacity (1000 Btuh) Gross
TC – Total Capacity (1000 Btuh) Gross

NOTES:

1. Direct interpolation is permissible. Do not extrapolate.
2. The following formulas may be used:

$$t_{ldb} = t_{edb} - \frac{\text{sensible capacity (Btuh)}}{1.10 \times \text{cfm}}$$

t_{lwb} = Wet–bulb temperature corresponding to enthalpy of air leaving evaporator coil (h_{lwb})

$$h_{lwb} = h_{ewb} - \frac{\text{total capacity (Btuh)}}{4.5 \times \text{cfm}}$$

Where: h_{ewb} = Enthalpy of air entering evaporator coil

Table 19 – COOLING CAPACITIES 2-Stage Cooling 27.5 TONS

50TC*D30				Ambient Temperature														
				85			95			105			115			125		
				EA (dB)			EA (dB)			EA (dB)			EA (dB)			EA (dB)		
				75	80	85	75	80	85	75	80	85	75	80	85	75	80	85
7,500 CFM	EAT (wb)	58	THC	298	298	336.8	285.3	285.3	322.4	270.1	270.1	305.3	253.5	253.5	286.5	235	235	265.5
			SHC	259.2	298	336.8	248.2	285.3	322.4	235	270.1	305.3	220.5	253.5	286.5	204.4	235	265.5
		62	THC	318.3	318.3	318.3	301.9	301.9	309	282.4	282.4	299.5	260.5	260.5	288.5	237.1	237.1	273.1
			SHC	233.5	275.2	316.9	225.8	267.4	309	216.6	258.1	299.5	206.1	247.3	288.5	193	233.1	273.1
		67	THC	352.3	352.3	352.3	335.9	335.9	335.9	317.1	317.1	317.1	294	294	294	268.9	268.9	268.9
			SHC	193.3	235	276.8	186.4	228.3	270.1	178.7	220.5	262.4	169.3	211.1	252.9	159.3	201.1	242.9
		72	THC	383.6	383.6	383.6	368.5	368.5	368.5	350.7	350.7	350.7	329.6	329.6	329.6	304.6	304.6	304.6
			SHC	149.7	191.9	234.2	144	186.2	228.4	137.3	179.5	221.7	129.6	171.7	213.8	120.6	162.5	204.5
		76	THC	–	404	404	–	390.3	390.3	–	373.1	373.1	–	353.4	353.4	–	349.5	349.5
			SHC	–	154.8	200.2	–	150.2	195.6	–	144.5	189.9	–	138	183.2	–	135.9	181.3
8,750 CFM	EAT (wb)	58	THC	315.7	315.7	356.8	302.4	302.4	341.8	286.8	286.8	324.1	269.2	269.2	304.3	250.1	250.1	282.6
			SHC	274.6	315.7	356.8	263	302.4	341.8	249.4	286.8	324.1	234.2	269.2	304.3	217.5	250.1	282.6
		62	THC	329.7	329.7	346.7	312.7	312.7	338.3	293	293	328	271.1	271.1	314.6	250.4	250.4	293.8
			SHC	251.3	299	346.7	243.3	290.8	338.3	233.7	280.9	328	222	268.3	314.6	206.9	250.4	293.8
		67	THC	363.1	363.1	363.1	346.4	346.4	346.4	327.1	327.1	327.1	303.7	303.7	303.7	277.4	277.4	277.4
			SHC	204.4	252.2	299.9	197.8	245.7	293.6	190.2	238.3	286.3	181	229.1	277.2	170.9	219	267
		72	THC	392.4	392.4	392.4	377.4	377.4	377.4	359.5	359.5	359.5	338.6	338.6	338.6	313.2	313.2	313.2
			SHC	153.8	201.6	249.3	148.4	196.3	244.3	141.9	190	238	134.5	182.7	230.8	119	167.2	215.4
		76	THC	–	410.9	410.9	–	397.4	397.4	–	380	380	–	359.9	359.9	–	350.6	350.6
			SHC	–	160.7	213.6	–	156.2	208.9	–	150.1	201.8	–	143.2	194.1	–	139	189.7
10,000 CFM	EAT (wb)	58	THC	330.4	330.4	373.4	316.6	316.6	357.8	300.7	300.7	339.9	282.3	282.3	319	262.3	262.3	296.4
			SHC	287.4	330.4	373.4	275.4	316.6	357.8	261.6	300.7	339.9	245.6	282.3	319	228.2	262.3	296.4
		62	THC	338.9	338.9	373.5	321.8	321.8	364.5	301.9	301.9	354.3	282.6	282.6	331.6	262.6	262.6	308.2
			SHC	267.2	320.3	373.5	258.9	311.7	364.5	249.5	301.9	354.3	233.5	282.6	331.6	217	262.6	308.2
		67	THC	371.1	371.1	371.1	354.3	354.3	354.3	334.7	334.7	334.7	310.9	310.9	310.9	284.1	284.1	289.8
			SHC	214.5	267.9	321.3	208.2	262	315.7	200.9	254.9	308.9	191.9	246	300.1	181.7	235.7	289.8
		72	THC	398.6	398.6	398.6	383.8	383.8	383.8	365.7	365.7	365.7	344.9	344.9	344.9	319.5	319.5	319.5
			SHC	157.3	210.1	262.8	152.2	205.4	258.7	145.8	199.4	252.9	138.7	192.5	246.3	122.5	176.2	230
		76	THC	–	415.7	415.7	–	402.3	402.3	–	384.9	384.9	–	364.5	364.5	–	355.1	355.1
			SHC	–	165.2	223.6	–	160.5	218	–	154.6	211.3	–	147.8	203.9	–	143.3	199.4
11,250 CFM	EAT (wb)	58	THC	342.7	342.7	387.3	328.7	328.7	371.4	312.7	312.7	353.3	293.5	293.5	331.7	272.7	272.7	308.2
			SHC	298.1	342.7	387.3	285.9	328.7	371.4	272	312.7	353.3	255.3	293.5	331.7	237.2	272.7	308.2
		62	THC	346.8	346.8	396.7	329.7	329.7	387	313	313	367.3	293.8	293.8	344.8	273	273	320.4
			SHC	281.1	338.9	396.7	272.5	329.7	387	258.6	313	367.3	242.8	293.8	344.8	225.6	273	320.4
		67	THC	377.2	377.2	377.2	360.4	360.4	360.4	340.7	340.7	340.7	316.6	316.6	321.8	289.3	289.3	311.2
			SHC	223.7	282.5	341.2	217.9	277.2	336.5	210.8	270.5	330.2	202.1	261.9	321.8	191.7	251.4	311.2
		72	THC	403.1	403.1	403.1	388.6	388.6	388.6	370.3	370.3	370.3	349.5	349.5	349.5	324	324	324
			SHC	160.3	217.7	275.1	155.5	213.7	271.9	149.3	208	266.7	142.4	201.4	260.5	125.3	184.4	243.6
		76	THC	–	419.3	419.3	–	406	406	–	388.5	388.5	–	367.8	367.8	–	358.4	358.4
			SHC	–	168.8	231.3	–	164.4	226.3	–	158.6	220	–	151.9	212.8	–	147.2	147.9
12,500 CFM	EAT (wb)	58	THC	353	353	398.9	338.8	338.8	382.9	322.5	322.5	364.5	303.1	303.1	342.5	281.8	281.8	318.4
			SHC	307.1	353	398.9	294.7	338.8	382.9	280.6	322.5	364.5	263.7	303.1	342.5	245.1	281.8	318.4
		62	THC	353.9	353.9	415.3	339.1	339.1	397.9	322.8	322.8	378.9	303.4	303.4	356	282	282	331
			SHC	292.4	353.9	415.3	280.2	339.1	397.9	266.8	322.8	378.9	250.7	303.4	356	233.1	282	331
		67	THC	381.9	381.9	381.9	365.2	365.2	365.2	345.3	345.3	350.4	321.3	321.3	342.2	293.9	293.9	331
			SHC	232.3	296.1	360	227	291.6	356.3	220.1	285.2	350.4	211.5	276.8	342.2	200.9	266	331
		72	THC	406.6	406.6	406.6	392.2	392.2	392.2	373.9	373.9	373.9	352.9	352.9	352.9	327.5	327.5	327.5
			SHC	163.1	224.8	286.6	158.5	221.4	284.3	152.5	216.1	279.6	145.7	209.8	273.9	128.2	192	255.7
		76	THC	–	422.1	422.1	–	408.9	408.9	–	391.2	391.2	–	370.3	370.3	–	360.9	360.9
			SHC	–	172.2	238.5	–	167.9	234	–	162.3	228.1	–	155.7	221.2	–	150.8	215.9

* Humidi–MiZer available for 17–28 sizes only

LEGEND:

– – Do not operate
Cfm – Cubic feet per minute (supply air)
EAT(db) – Entering air temperature (dry bulb)
EAT(wb) – Entering air temperature (wet bulb)
SHC – Sensible heat capacity
TC – Total capacity

Table 20 – STATIC PRESSURE ADDERS (in. wg) - Factory Options and/or Accessories

Economizer - Vertical and Horizontal Duct Configuration

MODEL SIZES 17 – 30								
CFM	**4500**	**5000**	**5500**	**6000**	**6500**	**7000**	**7500**	**8000**
Static Pressure Adder (in. wg)	0.047	0.052	0.057	0.062	0.067	0.072	0.077	0.082

MODEL SIZES 17 – 30									
CFM	**8500**	**9000**	**9500**	**10000**	**10500**	**11000**	**11500**	**12000**	**12500**
Static Pressure Adder (in. wg)	0.088	0.093	0.098	0.103	0.109	0.114	0.119	0.125	0.131

Electric Heaters - Vertical and Horizontal Duct Configuration

MODEL SIZES 17 – 30								
CFM	**4500**	**5000**	**5500**	**6000**	**6500**	**7000**	**7500**	**8000**
25 kW Heater	0.010	0.010	0.015	0.020	0.025	0.030	0.035	0.040
50 kW Heater	0.020	0.020	0.030	0.040	0.050	0.060	0.070	0.080
75 kW Heater	0.030	0.040	0.050	0.060	0.070	0.080	0.100	0.120

MODEL SIZES 17 – 30									
CFM	**8500**	**9000**	**9500**	**10000**	**10500**	**11000**	**11500**	**12000**	**12500**
25 kW Heater	0.045	0.050	0.055	0.060	0.070	0.080	0.090	0.100	0.105
50 kW Heater	0.090	0.100	0.120	0.130	0.150	0.160	0.180	0.200	0.230
75 kW Heater	0.140	0.150	0.180	0.200	0.230	0.250	0.270	0.300	0.330

Humidi-MiZer Coil

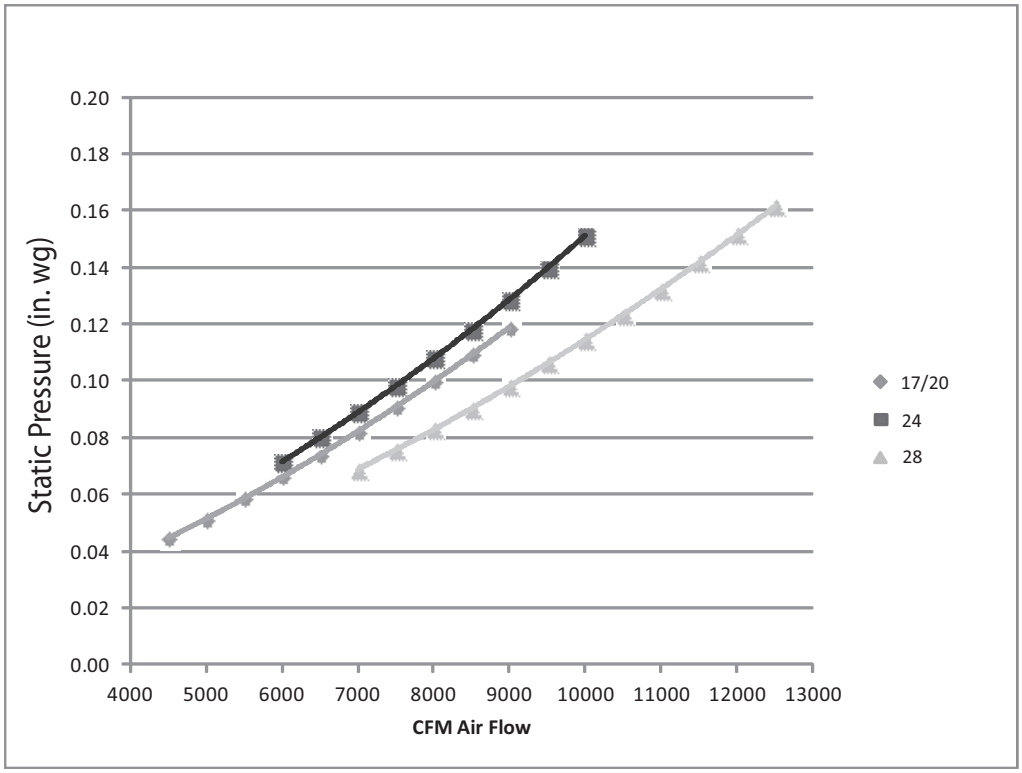

C11175A

50TC

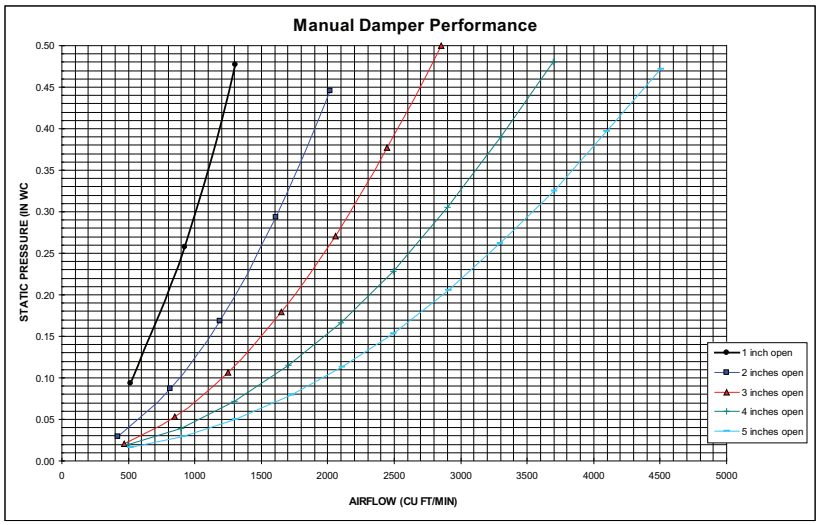

C09264

Fig. 12 - Manual Damper Performance

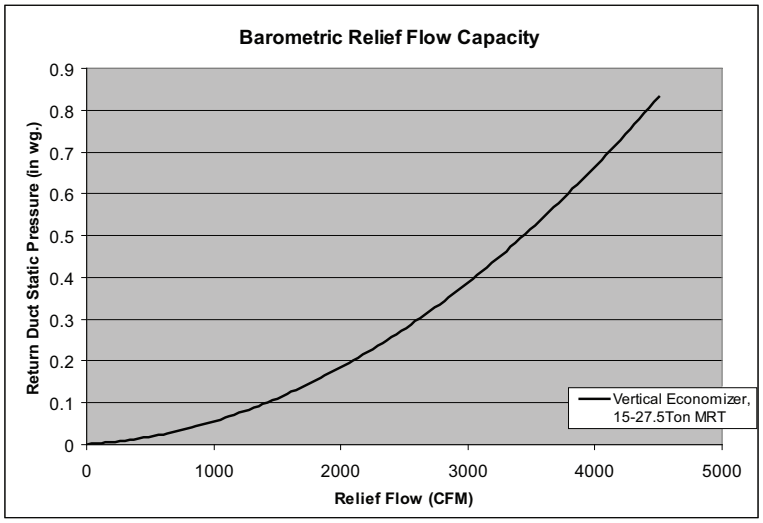

C11307

Fig. 13 - Barometric Relief Flow Capacity

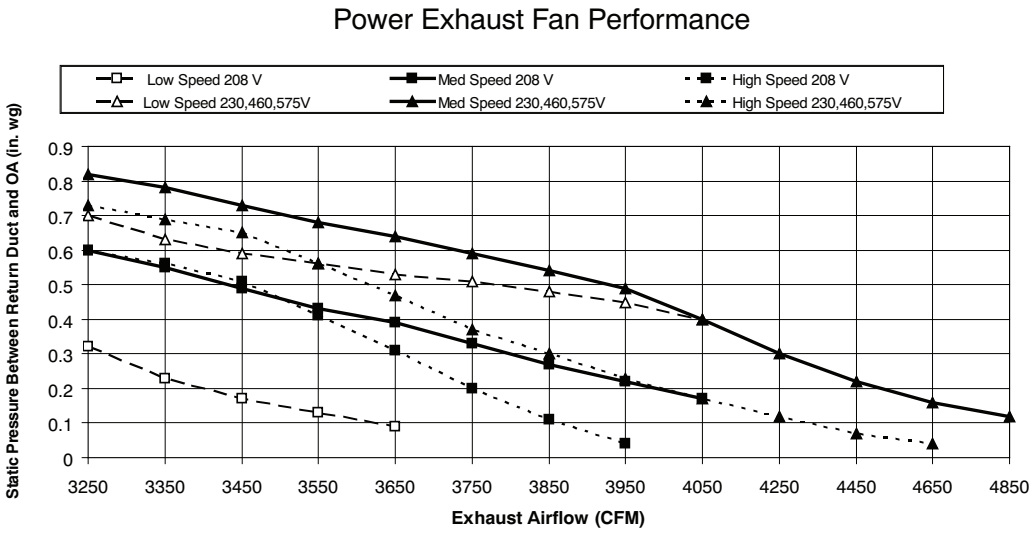

C11308

Fig. 14 - Power Exhaust Fan Performance

General fan performance notes:

1. Interpolation is permissible. Do not extrapolate.
2. External static pressure is the static pressure difference between the return duct and the supply duct plus the static pressure caused by any FIOPs or accessories.
3. Tabular data accounts for pressure loss due to clean filters, unit casing, and wet coils. Factory options and accessories may add static pressure losses, as shown in the above table. Selection software is available, through your salesperson, to help you select the best motor/drive combination for your application.
4. The Fan Performance tables offer motor/drive recommendations. In cases when two motor/drive combinations would work, Carrier recommended the lower horsepower option.
5. For information on the electrical properties of Carrier motors, please see the Electrical information section of this book.
6. For more information on the performance limits of Carrier motors, see the application data section of this book.

FAN PERFORMANCE

Table 21 – 50TC-D17 **VERTICAL SUPPLY / RETURN** **15 TON**

CFM	Available External Static Pressure (in. wg)									
	0.2		0.4		0.6		0.8		1.0	
	RPM	BHP	RPM	BHP	RPM	BHP	RPM	BHP	RPM	BHP
4500	**436**	**0.60**	530	0.90	611	1.22	684	1.57	751	1.94
4900	**456**	**0.71**	546	1.03	625	1.37	695	1.73	760	2.12
5250	**473**	**0.83**	560	1.16	637	1.51	706	1.89	770	2.30
5600	**491**	**0.95**	575	1.30	650	1.67	717	2.07	780	2.48
6000	513	1.11	593	1.48	665	1.87	731	2.28	792	2.71
6400	534	1.29	611	1.68	681	2.09	745	2.52	805	2.97
6750	553	1.46	628	1.87	696	2.29	758	2.74	817	3.20
7100	573	1.65	645	2.07	711	2.51	772	2.98	829	3.46
7500	595	1.88	**665**	**2.33**	729	2.79	788	3.27	**844**	**3.77**

CFM	Available External Static Pressure (in. wg)									
	1.2		1.4		1.6		1.8		2.0	
	RPM	BHP	RPM	BHP	RPM	BHP	RPM	BHP	RPM	BHP
4500	812	2.33	869	2.74	924	3.17	975	3.62	**1024**	**4.08**
4900	821	2.53	877	2.95	931	3.40	981	3.86	**1030**	**4.34**
5250	829	2.72	885	3.16	938	3.61	988	4.09	**1036**	**4.57**
5600	838	2.92	893	3.37	945	3.84	994	4.33	**1042**	**4.83**
6000	849	3.17	903	3.63	954	4.12	1003	4.62	– – – –	– – – –
6400	861	3.43	914	3.92	964	4.42	**1012**	**4.94**	– – – –	– – – –
6750	872	3.69	924	4.18	973	4.70	– – – –	– – – –	– – – –	– – – –
7100	883	3.95	934	4.47	– – – –	– – – –	– – – –	– – – –	– – – –	– – – –
7500	897	4.28	947	4.81	– – – –	– – – –	– – – –	– – – –	– – – –	– – – –

Std Static Motor and Drive – 514–680 RPM, Max BHP 2.29
Medium Static Motor and Drive – 679–863 RPM, Max BHP 3.3
High Static Motor and Drive – 826–1009 RPM, Max BHP 4.9
– – – – Outside operating range
Boldface – Field–supplied Drive

Table 22 – 50TC-D20 **VERTICAL SUPPLY / RETURN** **17.5 TON**

CFM	Available External Static Pressure (in. wg)									
	0.2		0.4		0.6		0.8		1.0	
	RPM	BHP	RPM	BHP	RPM	BHP	RPM	BHP	RPM	BHP
5250	**473**	**0.83**	**560**	**1.16**	637	1.51	706	1.89	770	2.30
5700	**497**	**0.99**	**580**	**1.34**	654	1.72	721	2.12	783	2.54
6100	**518**	**1.15**	**598**	**1.53**	669	1.92	735	2.34	795	2.78
6500	**540**	**1.33**	**616**	**1.73**	685	2.14	749	2.58	808	3.03
7000	**567**	**1.59**	640	2.01	707	2.45	768	2.91	826	3.38
7500	**595**	**1.88**	665	2.33	729	2.79	788	3.27	844	3.77
7900	**618**	**2.14**	685	2.60	747	3.09	805	3.59	859	4.10
8300	641	2.42	705	2.91	765	3.41	822	3.93	875	4.46
8750	666	2.77	729	3.28	787	3.80	842	4.34	893	4.90

CFM	Available External Static Pressure (in. wg)									
	1.2		1.4		1.6		1.8		2.0	
	RPM	BHP	RPM	BHP	RPM	BHP	RPM	BHP	RPM	BHP
5250	829	2.72	885	3.16	938	3.61	988	4.09	1036	4.57
5700	841	2.98	895	3.43	947	3.91	997	4.40	1044	4.90
6100	852	3.23	906	3.70	957	4.19	1005	4.70	1052	5.22
6500	864	3.50	917	3.99	967	4.50	1015	5.02	1060	5.55
7000	**880**	**3.88**	931	4.38	980	4.91	1027	5.45	1072	6.01
7500	897	4.28	947	4.81	995	5.36	1041	5.92	**1085**	**6.49**
7900	911	4.63	960	5.18	1007	5.75	1052	6.32	– – – –	– – – –
8300	926	5.01	974	5.58	1020	6.16	– – – –	– – – –	– – – –	– – – –
8750	943	5.47	990	6.05	– – – –	– – – –	– – – –	– – – –	– – – –	– – – –

Std Static Motor and Drive – 622–822 RPM, Max BHP 3.3
Medium Static Motor and Drive – 713–879 RPM, Max BHP 4.9
High Static Motor and Drive – 882–1078 RPM, Max BHP 6.5
– – – – Outside operating range
Boldface – Field–supplied Drive

FAN PERFORMANCE (cont.)

Table 23 – 50TC-D24 **VERTICAL SUPPLY / RETURN** **20 TON**

CFM	Available External Static Pressure (in. wg)									
	0.2		0.4		0.6		0.8		1.0	
	RPM	BHP	RPM	BHP	RPM	BHP	RPM	BHP	RPM	BHP
6000	**506**	**1.12**	**593**	**1.43**	**668**	**1.74**	736	2.07	798	2.40
6500	**533**	**1.36**	**616**	**1.70**	689	2.04	754	2.39	815	2.74
7000	**561**	**1.64**	**640**	**2.01**	710	2.37	774	2.74	833	3.11
7500	**588**	**1.96**	**664**	**2.35**	732	2.74	795	3.13	852	3.53
8000	**617**	**2.32**	689	2.74	755	3.15	816	3.57	872	3.99
8500	**645**	**2.73**	715	3.17	779	3.60	837	4.04	892	4.49
9000	**674**	**3.18**	741	3.64	803	4.10	860	4.57	913	5.04
9500	703	3.67	767	4.16	827	4.65	883	5.14	935	5.64
10000	732	4.22	794	4.74	852	5.25	906	5.77	957	6.29

CFM	Available External Static Pressure (in. wg)									
	1.2		1.4		1.6		1.8		2.0	
	RPM	BHP	RPM	BHP	RPM	BHP	RPM	BHP	RPM	BHP
6000	855	2.75	909	3.11	959	3.47	1008	3.85	1054	4.24
6500	871	3.11	924	3.48	974	3.87	1022	4.26	1067	4.67
7000	888	3.50	940	3.89	989	4.30	1036	4.71	1081	5.13
7500	906	3.94	957	4.35	1005	4.77	1052	5.20	1096	5.64
8000	925	4.42	975	4.85	1022	5.29	1068	5.74	1111	6.20
8500	944	4.94	993	5.40	1040	5.86	1084	6.33	1127	6.81
9000	964	5.51	1012	5.99	1058	6.48	1102	6.97	1144	7.46
9500	984	6.13	1032	6.64	1077	7.14	1120	7.65	1161	8.17
10000	1006	6.81	1052	7.33	1096	7.86	1138	8.40	– – – –	– – – –

Std Static Motor and Drive – 690–863 RPM, Max BHP 4.9
Medium Static Motor and Drive – 835–1021 RPM, Max BHP 6.5
High Static Motor and Drive – 941–1176 RPM, Max BHP 8.7
– – – – Outside operating range
Boldface – Field–supplied Drive

Table 24 – 50TC-D28 **VERTICAL SUPPLY / RETURN** **25 TON**

CFM	Available External Static Pressure (in. wg)									
	0.2		0.4		0.6		0.8		1.0	
	RPM	BHP	RPM	BHP	RPM	BHP	RPM	BHP	RPM	BHP
7500	**541**	**1.50**	**636**	**1.88**	**716**	**2.27**	787	2.66	850	3.06
8000	**563**	**1.76**	**656**	**2.17**	735	2.58	804	3.00	867	3.42
8500	**585**	**2.05**	**676**	**2.50**	753	2.93	822	3.37	884	3.81
9000	**608**	**2.37**	**697**	**2.85**	772	3.31	840	3.77	901	4.24
9500	**631**	**2.73**	717	3.24	791	3.73	858	4.21	918	4.70
10000	**654**	**3.12**	738	3.66	811	4.18	876	4.69	936	5.20
10500	**678**	**3.56**	759	4.12	831	4.67	**895**	**5.21**	954	5.74
11000	**701**	**4.02**	781	4.62	**851**	**5.20**	914	5.76	972	6.33
11500	725	4.53	**802**	**5.16**	**871**	**5.77**	933	6.36	991	6.95
12000	**748**	**5.09**	**824**	**5.75**	**892**	**6.38**	953	7.00	1010	7.62
12500	**772**	**5.68**	**846**	**6.38**	**912**	**7.04**	973	7.69	1029	8.34

CFM	Available External Static Pressure (in. wg)									
	1.2		1.4		1.6		1.8		2.0	
	RPM	BHP	RPM	BHP	RPM	BHP	RPM	BHP	RPM	BHP
CFM	RPM	BHP	RPM	BHP	RPM	BHP	RPM	BHP	RPM	BHP
7500	909	3.47	963	3.89	1014	4.32	1062	4.77	1108	5.23
8000	925	3.85	978	4.29	1029	4.74	1077	5.20	1122	5.68
8500	941	4.26	994	4.72	1044	5.19	1092	5.67	1137	6.16
9000	957	4.71	1010	5.19	1060	5.67	1107	6.17	1152	6.68
9500	974	5.19	1027	5.69	1076	6.20	1123	6.72	1167	7.24
10000	991	5.72	1043	6.24	1092	6.77	1138	7.30	– – – –	– – – –
10500	1009	6.28	1060	6.83	1109	7.37	1155	7.93	– – – –	– – – –
11000	1026	6.89	1077	7.46	1125	8.03	1171	8.60	– – – –	– – – –
11500	1044	7.54	1095	8.13	1142	8.72	– – – –	– – – –	– – – –	– – – –
12000	1062	8.23	1112	8.85	– – – –	– – – –	– – – –	– – – –	– – – –	– – – –
12500	– – – –	– – – –	– – – –	– – – –	– – – –	– – – –	– – – –	– – – –	– – – –	– – – –

Std Static Motor and Drive – 717–911 RPM, Max BHP 4.9
Medium Static Motor and Drive – 913–1116 RPM, Max BHP 6.5
High Static Motor and Drive – 941–1176 RPM, Max BHP 8.7
– – – – Outside operating range
Boldface – Field–supplied Drive

FAN PERFORMANCE (cont.)

Table 25 – 50TC-D30 **VERTICAL SUPPLY / RETURN** **27.5 TON**

CFM	Available External Static Pressure (in. wg)									
	0.2		0.4		0.6		0.8		1.0	
	RPM	BHP	RPM	BHP	RPM	BHP	RPM	BHP	RPM	BHP
8250	620	1.85	705	2.31	778	2.77	843	3.22	903	3.68
8800	650	2.18	731	2.67	802	3.16	866	3.64	925	4.13
9350	679	2.54	758	3.07	828	3.59	890	4.10	948	4.62
9900	710	2.95	786	3.51	853	4.06	915	4.60	971	5.15
10450	740	3.40	814	3.99	879	4.57	939	5.15	995	5.73
11000	771	3.90	842	4.52	906	5.14	965	5.75	1020	6.35
11550	802	4.45	871	5.10	933	5.75	991	6.39	1044	7.03
12100	833	5.04	900	5.73	961	6.41	1017	7.09	1070	7.76
12650	865	5.70	930	6.42	989	7.13	1044	7.84	1095	8.54
13200	897	6.40	959	7.16	1017	7.90	1071	8.64	1121	9.38
13750	929	7.17	990	7.96	1046	8.74	1098	9.51	1148	10.27

CFM	Available External Static Pressure (in. wg)									
	1.2		1.4		1.6		1.8		2.0	
	RPM	BHP	RPM	BHP	RPM	BHP	RPM	BHP	RPM	BHP
8250	959	4.14	1011	4.61	1059	5.08	1106	5.56	1150	6.05
8800	980	4.62	1031	5.11	1080	5.61	1126	6.12	1169	6.63
9350	1002	5.14	1052	5.66	1100	6.18	1146	6.72	1189	7.25
9900	1024	5.70	1074	6.25	1121	6.80	1166	7.36	1209	7.92
10450	1047	6.30	1096	6.88	1143	7.47	1187	8.05	1230	8.64
11000	1071	6.96	1119	7.57	1165	8.18	1209	8.79	1251	9.41
11550	1095	7.66	1142	8.30	1188	8.94	1231	9.58	1273	10.23
12100	1119	8.42	1166	9.09	1211	9.76	1253	10.43	1295	11.10
12650	1144	9.24	1190	9.93	1234	10.63	1276	11.33	– – – –	– – – –
13200	1169	10.10	1215	10.83	1258	11.56	– – – –	– – – –	– – – –	– – – –
13750	1195	11.03	1240	11.79	– – – –	– – – –	– – – –	– – – –	– – – –	– – – –

Std Static Motor and Drive – 751–954 RPM, Max BHP 6.5
Medium Static Motor and Drive – 920–1190 RPM, Max BHP 10.5
High Static Motor & Drive – 1116–1400 RPM, Max BHP 11.9
– – – – Outside operating range
Boldface – Field–supplied Drive

Table 26 – 50TC-D17 **HORIZONTAL SUPPLY / RETURN** **15 TON**

CFM	Available External Static Pressure (in. wg)									
	0.2		0.4		0.6		0.8		1.0	
	RPM	BHP	RPM	BHP	RPM	BHP	RPM	BHP	RPM	BHP
4500	**451**	**0.84**	533	1.21	605	1.63	668	2.12	726	2.67
4900	**476**	**1.01**	554	1.40	623	1.84	685	2.34	742	2.89
5250	**498**	**1.18**	573	1.60	640	2.05	701	2.55	756	3.11
5600	520	1.37	593	1.82	658	2.28	717	2.79	771	3.35
6000	546	1.61	616	2.10	679	2.58	736	3.10	789	3.67
6400	572	1.88	640	2.41	700	2.91	756	3.45	808	4.03
6750	595	2.13	661	2.70	720	3.23	774	3.79	825	4.38
7100	619	2.41	683	3.02	**740**	**3.59**	793	4.16	842	4.76
7500	646	2.75	**708**	**3.42**	764	4.02	815	4.62	– – – –	– – – –

CFM	Available External Static Pressure (in. wg)									
	1.2		1.4		1.6		1.8		2.0	
	RPM	BHP	RPM	BHP	RPM	BHP	RPM	BHP	RPM	BHP
4500	778	3.25	826	3.86	871	4.49	**913**	**5.15**	– – – –	– – – –
4900	794	3.49	842	4.12	887	4.78	– – – –	– – – –	– – – –	– – – –
5250	808	3.72	856	4.36	– – – –	– – – –	– – – –	– – – –	– – – –	– – – –
5600	822	3.97	870	4.62	– – – –	– – – –	– – – –	– – – –	– – – –	– – – –
6000	839	4.29	– – – –	– – – –	– – – –	– – – –	– – – –	– – – –	– – – –	– – – –
6400	857	4.65	– – – –	– – – –	– – – –	– – – –	– – – –	– – – –	– – – –	– – – –
6750	– – – –	– – – –	– – – –	– – – –	– – – –	– – – –	– – – –	– – – –	– – – –	– – – –
7100	– – – –	– – – –	– – – –	– – – –	– – – –	– – – –	– – – –	– – – –	– – – –	– – – –
7500	– – – –	– – – –	– – – –	– – – –	– – – –	– – – –	– – – –	– – – –	– – – –	– – – –

Std Static Motor and Drive – 514–680 RPM, Max BHP 2.2
Medium Static Motor and Drive – 614–780 RPM, Max BHP 3.3
High Static Motor and Drive – 746–912 RPM, Max BHP 4.9
– – – – Outside operating range
Boldface – Field–supplied Drive

Table 27 – 50TC-D20 **HORIZONTAL SUPPLY / RETURN** **17.5 TON**

CFM	Available External Static Pressure (in. wg)									
	0.2		0.4		0.6		0.8		1.0	
	RPM	BHP	RPM	BHP	RPM	BHP	RPM	BHP	RPM	BHP
5250	**498**	**1.18**	**573**	**1.60**	640	2.05	701	2.55	756	3.11
5700	**526**	**1.43**	**599**	**1.89**	663	2.35	721	2.86	776	3.43
6100	**552**	**1.67**	622	2.17	684	2.66	741	3.18	794	3.76
6500	**579**	**1.95**	646	2.49	706	3.00	761	3.54	813	4.12
7000	**612**	**2.33**	677	2.93	734	3.48	788	4.05	837	4.64
7500	646	2.75	**708**	**3.42**	764	4.02	815	4.62	**863**	**5.23**
7900	673	3.13	734	3.86	788	4.50	**838**	**5.12**	884	5.75
8300	**700**	**3.53**	760	4.33	**812**	**5.01**	**861**	**5.66**	906	6.32
8750	731	4.03	789	4.90	**840**	**5.63**	887	6.33	– – – –	– – – –

CFM	Available External Static Pressure (in. wg)									
	1.2		1.4		1.6		1.8		2.0	
	RPM	BHP	RPM	BHP	RPM	BHP	RPM	BHP	RPM	BHP
5250	808	3.72	856	4.36	901	5.04	943	5.75	983	6.48
5700	826	4.05	874	4.71	918	5.40	960	6.13	– – – –	– – – –
6100	843	4.38	890	5.05	934	5.75	976	6.50	– – – –	– – – –
6500	861	4.75	907	5.43	951	6.14	– – – –	– – – –	– – – –	– – – –
7000	885	5.28	929	5.96	– – – –	– – – –	– – – –	– – – –	– – – –	– – – –
7500	909	5.88	– – – –	– – – –	– – – –	– – – –	– – – –	– – – –	– – – –	– – – –
7900	929	6.42	– – – –	– – – –	– – – –	– – – –	– – – –	– – – –	– – – –	– – – –
8300	– – – –	– – – –	– – – –	– – – –	– – – –	– – – –	– – – –	– – – –	– – – –	– – – –
8750	– – – –	– – – –	– – – –	– – – –	– – – –	– – – –	– – – –	– – – –	– – – –	– – – –

Std Static Motor and Drive – 622–822 RPM, Max BHP 3.3
Medium Static Motor and Drive – 713–879 RPM, Max BHP 4.9
High Static Motor and Drive – 882–1078 RPM, Max BHP 6.5
– – – – Outside operating range
Boldface – Field–supplied Drive

FAN PERFORMANCE (cont.)

Table 28 – 50TC-D24 **HORIZONTAL SUPPLY / RETURN** **20 TON**

CFM	Available External Static Pressure (in. wg)									
	0.2		0.4		0.6		0.8		1.0	
	RPM	BHP	RPM	BHP	RPM	BHP	RPM	BHP	RPM	BHP
6000	**546**	**1.57**	**617**	**2.10**	**680**	**2.67**	738	3.29	790	3.93
6500	**579**	**1.90**	**646**	**2.46**	707	3.07	763	3.71	814	4.39
7000	**613**	**2.28**	**677**	**2.87**	735	3.51	789	4.19	839	4.89
7500	**648**	**2.71**	708	3.34	764	4.01	816	4.72	865	5.46
8000	**683**	**3.20**	740	3.86	794	4.57	846	5.30	892	6.08
8500	718	3.76	773	4.45	825	5.18	873	5.95	**919**	**6.75**
9000	754	4.37	**814**	**5.10**	856	5.87	**903**	**6.67**	947	7.50
9500	– – – –	– – – –	840	5.82	**887**	**6.51**	**933**	**7.45**	976	8.31
10000	– – – –	– – – –	874	6.50	**920**	**7.44**	965	8.30	– – – –	– – – –

CFM	Available External Static Pressure (in. wg)									
	1.2		1.4		1.6		1.8		2.0	
	RPM	BHP	RPM	BHP	RPM	BHP	RPM	BHP	RPM	BHP
6000	839	4.60	885	5.29	928	6.01	969	6.75	1008	7.51
6500	862	5.09	907	5.82	950	6.57	990	7.34	1028	8.13
7000	886	5.63	930	6.39	972	7.17	1012	7.97	1050	8.70
7500	911	6.22	954	7.01	995	7.83	1035	8.66	– – – –	– – – –
8000	**936**	**6.87**	979	7.69	1019	8.54	– – – –	– – – –	– – – –	– – – –
8500	965	7.58	1004	8.44	– – – –	– – – –	– – – –	– – – –	– – – –	– – – –
9000	990	8.36	– – – –	– – – –	– – – –	– – – –	– – – –	– – – –	– – – –	– – – –
9500	– – – –	– – – –	– – – –	– – – –	– – – –	– – – –	– – – –	– – – –	– – – –	– – – –
10000	– – – –	– – – –	– – – –	– – – –	– – – –	– – – –	– – – –	– – – –	– – – –	– – – –

Std Static Motor and Drive – 690–863 RPM, Max BHP 4.9
Medium Static Motor and Drive – 835–1021 RPM, Max BHP 6.5
High Static Motor and Drive – 941–1176 RPM, Max BHP 8.7
– – – – Outside operating range
Boldface – Field–supplied Drive

Table 29 – 50TC-D28 **HORIZONTAL SUPPLY / RETURN** **25 TON**

CFM	Available External Static Pressure (in. wg)									
	0.2		0.4		0.6		0.8		1.0	
	RPM	BHP	RPM	BHP	RPM	BHP	RPM	BHP	RPM	BHP
7500	**553**	**1.92**	**621**	**2.46**	683	3.07	741	3.72	795	4.42
8000	**575**	**2.21**	**639**	**2.77**	700	3.39	756	4.07	809	4.78
8500	**596**	**2.52**	658	3.10	716	3.73	771	4.43	823	5.16
9000	**616**	**2.86**	675	3.44	732	4.10	786	4.80	836	5.55
9500	**636**	**3.22**	693	3.82	747	4.48	800	5.20	849	5.97
10000	656	3.60	710	4.21	763	4.89	813	5.62	862	6.40
10500	675	4.02	727	4.64	778	5.32	827	6.07	874	6.86
11000	694	4.46	**744**	**5.09**	793	5.79	841	6.50	887	7.34
11500	**713**	**4.93**	761	5.57	808	6.27	854	7.03	899	7.84

CFM	Available External Static Pressure (in. wg)									
	1.2		1.4		1.6		1.8		2.0	
	RPM	BHP	RPM	BHP	RPM	BHP	RPM	BHP	RPM	BHP
7500	845	5.14	892	5.90	936	6.68	978	7.48	**1018**	**8.31**
8000	859	5.53	905	6.31	949	7.11	991	7.94	– – – –	– – – –
8500	872	5.93	918	6.73	961	7.56	1003	8.41	– – – –	– – – –
9000	884	6.34	930	7.16	973	8.01	– – – –	– – – –	– – – –	– – – –
9500	896	6.77	941	7.61	984	8.48	– – – –	– – – –	– – – –	– – – –
10000	908	7.22	953	8.08	– – – –	– – – –	– – – –	– – – –	– – – –	– – – –
10500	920	7.69	963	8.56	– – – –	– – – –	– – – –	– – – –	– – – –	– – – –
11000	931	8.18	– – – –	– – – –	– – – –	– – – –	– – – –	– – – –	– – – –	– – – –
11500	943	8.70	– – – –	– – – –	– – – –	– – – –	– – – –	– – – –	– – – –	– – – –

Std Static Motor and Drive – 647–791 RPM, Max BHP 4.9
Medium Static Motor and Drive – 755–923 RPM, Max BHP 6.5
High Static Motor and Drive – 827–1010 RPM, Max BHP 8.7
– – – – Outside operating range
Boldface – Field–supplied Drive

FAN PERFORMANCE (cont.)

Table 30 – 50TC-D30 **HORIZONTAL SUPPLY / RETURN** **27.5 TON**

CFM	Available External Static Pressure (in. wg)									
	0.2		0.4		0.6		0.8		1.0	
	RPM	BHP	RPM	BHP	RPM	BHP	RPM	BHP	RPM	BHP
8250	709	3.26	760	3.91	811	4.63	859	5.41	906	6.24
8800	750	3.87	798	4.55	845	5.30	892	6.10	936	6.96
9350	791	4.55	836	5.26	881	6.04	925	6.87	968	7.75
9900	832	5.32	875	6.06	918	6.86	959	7.72	1000	8.63
10450	874	6.17	914	6.94	955	7.77	995	8.66	1034	9.59
11000	916	7.11	954	7.91	993	8.77	1031	9.69	1068	10.65
11550	958	8.15	994	8.98	1031	9.87	1067	10.82	1103	11.81
12100	1000	9.28	1035	10.15	1070	11.07	----	----	----	----
12650	1042	10.53	1076	11.43	----	----	----	----	----	----
13200	1085	11.88	----	----	----	----	----	----	----	----
13750	----	----	----	----	----	----	----	----	----	----

CFM	Available External Static Pressure (in. wg)									
	1.2		1.4		1.6		1.8		2.0	
	RPM	BHP	RPM	BHP	RPM	BHP	RPM	BHP	RPM	BHP
8250	951	7.12	994	8.03	1035	8.97	1075	9.95	1113	10.96
8800	980	7.86	1021	8.80	1062	9.78	1100	10.79	1138	11.83
9350	1010	8.68	1050	9.65	1089	10.66	1127	11.70	----	----
9900	1041	9.59	1079	10.58	1117	11.62	----	----	----	----
10450	1072	10.58	1110	11.60	----	----	----	----	----	----
11000	1105	11.66	----	----	----	----	----	----	----	----
11550	----	----	----	----	----	----	----	----	----	----
12100	----	----	----	----	----	----	----	----	----	----
12650	----	----	----	----	----	----	----	----	----	----
13200	----	----	----	----	----	----	----	----	----	----
13750	----	----	----	----	----	----	----	----	----	----

Std Static Motor and Drive – 687–873 RPM, Max BHP 6.5
Medium Static Motor and Drive – 857–1047 RPM, Max BHP 10.5
High Static Motor & Drive – 1021–1281 RPM, Max BHP 11.9
---- Outside operating range
Boldface – Field–supplied Drive

50TC

Table 31 – PULLEY ADJUSTMENT - Vertical

Unit	Motor/Drive Combo	Motor Pulley turns open										
		0	0.5	1	1.5	2	2.5	3	3.5	4	4.5	5
17	Standard Static	680	663	647	630	614	597	580	564	547	531	514
	Medium Static	863	845	826	808	789	771	753	734	716	697	679
	High Static	1009	991	972	954	936	918	899	881	863	844	826
20	Standard Static	822	802	782	762	742	722	702	682	662	642	622
	Medium Static	879	862	846	829	813	796	779	763	746	730	713
	High Static	1078	1058	1039	1019	1000	980	960	941	921	902	882
24	Standard Static	863	846	828	811	794	777	759	742	725	707	690
	Medium Static	1021	1002	984	965	947	928	909	891	872	854	835
	High Static	1176	1153	1129	1106	1082	1059	1035	1012	988	965	941
28	Standard Static	911	892	872	853	833	814	795	775	756	736	717
	Medium Static	1116	1096	1075	1055	1035	1015	994	974	954	933	913
	High Static	1176	1153	1129	1106	1082	1059	1035	1012	988	965	941
30	Standard Static	954	934	913	893	873	853	832	812	792	771	751
	Medium Static	1190	1163	1136	1109	1082	1055	1028	1001	974	947	920
	High Static	1400	1372	1343	1315	1286	1258	1230	1201	1173	1144	1116

Table 32 – PULLEY ADJUSTMENT Horizontal

Unit	Motor/Drive Combo	Motor Pulley turns open										
		0	0.5	1	1.5	2	2.5	3	3.5	4	4.5	5
17	Standard Static	680	663	647	630	614	597	580	564	547	531	514
	Medium Static	780	763	747	730	714	697	680	664	647	631	614
	High Static	912	895	879	862	846	829	812	796	779	763	746
20	Standard Static	822	802	782	762	742	722	702	682	662	642	622
	Medium Static	879	862	846	829	813	796	779	763	746	730	713
	High Static	1078	1058	1039	1019	1000	980	960	941	921	902	882
24	Standard Static	863	846	828	811	794	777	759	742	725	707	690
	Medium Static	1021	1002	984	965	947	928	909	891	872	854	835
	High Static	1176	1153	1129	1106	1082	1059	1035	1012	988	965	941
28	Standard Static	791	777	762	748	733	719	705	690	676	661	647
	Medium Static	923	906	889	873	856	839	822	805	789	772	755
	High Static	1010	992	973	955	937	919	900	882	864	845	827
30	Standard Static	873	854	836	817	799	780	761	743	724	706	687
	Medium Static	1047	1028	1009	990	971	952	933	914	895	876	857
	High Static	1281	1255	1229	1203	1177	1151	1125	1099	1073	1047	1021

NOTE: Do not adjust pulley further than 5 turns open.

– Factory settings

Table 33 – 2-Stage Cooling **15 - 20 Tons**

UNIT	V–Ph–Hz	VOLTAGE RANGE		COMP 1		COMP 2		OFM (ea)		IFM		
		MIN	MAX	RLA	LRA	RLA	LRA	WATTS	FLA	TYPE	EFF at Full Load	FLA
17	208–3–60	187	253	29.5	195	30.1	225	350	1.5	STD	81.3%	7.5
										MED	83.8%	10.2
										HIGH	83.6%	15.0
	230–3–60	187	253	29.5	195	30.1	225	350	1.5	STD	81.3%	7.5
										MED	83.8%	10.2
										HIGH	83.6%	15.0
	460–3–60	414	506	14.7	95	16.7	114	277	0.9	STD	81.3%	3.4
										MED	83.8%	4.8
										HIGH	83.6%	7.4
	575–3–60	518	633	12.2	80	12.2	80	397	0.6	STD	81.1%	2.8
										MED	81.1%	2.8
										HIGH	83.6%	5.6
20	208–3–60	187	253	29.5	195	30.1	225	350	1.5	STD	83.8%	10.2
										MED	83.6%	15.0
										HIGH	87.5%	12.8
										HIGH–High Eff	89.5%	17.1
	230–3–60	187	253	29.5	195	30.1	225	350	1.5	STD	83.8%	10.2
										MED	83.6%	15.0
										HIGH	87.5%	12.8
										HIGH–High Eff	89.5%	17.1
	460–3–60	414	506	14.7	95	16.7	114	277	0.9	STD	83.8%	4.8
										MED	83.6%	7.4
										HIGH	87.5%	6.4
										HIGH–High Eff	89.5%	8.6
	575–3–60	518	633	12.2	80	12.2	80	397	0.6	STD	81.1%	2.8
										MED	83.6%	5.6
										HIGH	87.5%	5.1
										HIGH–High Eff	89.5%	7.6
24	208–3–60	187	253	48.1	245	29.5	195	350	1.5	STD	83.6%	15.0
										MED	87.5%	12.8
										HIGH	88.5%	19.4
										MED–High Eff	89.5%	17.1
										HIGH–High Eff	91.7%	28.5
	230–3–60	187	253	48.1	245	29.5	195	350	1.5	STD	83.6%	15.0
										MED	87.5%	12.8
										HIGH	88.5%	19.4
										MED–High Eff	89.5%	17.1
										HIGH–High Eff	91.7%	28.5
	460–3–60	414	506	18.6	125	14.7	95	277	0.9	STD	83.6%	7.4
										MED	87.5%	6.4
										HIGH	88.5%	9.7
										MED–High Eff	89.5%	8.6
										HIGH–High Eff	91.7%	14.3
	575–3–60	518	633	14.7	100	12.2	80	397	0.6	STD	83.6%	5.6
										MED	87.5%	5.1
										HIGH	88.5%	7.8
										MED–High Eff	89.5%	7.6
										HIGH–High Eff	91.7%	9.5

Table 34 – 2-Stage Cooling **25 - 27.5 Tons**

UNIT	V–Ph–Hz	VOLTAGE RANGE		COMP 1		COMP 2		OFM (ea)		IFM		
		MIN	MAX	RLA	LRA	RLA	LRA	WATTS	FLA	TYPE	EFF at Full Load	FLA
28	208–3–60	187	253	48.1	245	48.1	245	350	1.5	STD	83.6%	15.0
										MED	87.5%	12.8
										HIGH	88.5%	19.4
										MED–High Eff	89.5%	17.1
										HIGH–High Eff	91.7%	28.5
	230–3–60	187	253	48.1	245	48.1	245	350	1.5	STD	83.6%	15.0
										MED	87.5%	12.8
										HIGH	88.5%	19.4
										MED–High Eff	89.5%	17.1
										HIGH–High Eff	91.7%	28.5
	460–3–60	414	506	18.6	125	18.6	125	277	0.9	STD	83.6%	7.4
										MED	87.5%	6.4
										HIGH	88.5%	9.7
										MED–High Eff	89.5%	8.6
										HIGH–High Eff	91.7%	14.3
	575–3–60	518	633	14.7	100	14.7	100	397	0.6	STD	83.6%	5.6
										MED	87.5%	5.1
										HIGH	88.5%	7.8
										MED–High Eff	89.5%	7.6
										HIGH–High Eff	91.7%	9.5
30	208–3–60	187	253	51.3	300	51.3	300	350	1.5	STD–High Eff	89.5%	17.1
										MED–High Eff	91.7%	28.5
										HIGH–High Eff	91.7%	30.4
	230–3–60	187	253	51.3	300	51.3	300	350	1.5	STD–High Eff	89.5%	17.1
										MED–High Eff	91.7%	28.5
										HIGH–High Eff	91.7%	30.4
	460–3–60	414	506	23.1	150	23.1	150	277	0.9	STD–High Eff	89.5%	8.6
										MED–High Eff	91.7%	14.3
										HIGH–High Eff	91.7%	15.2
	575–3–60	518	633	19.9	109	19.9	109	397	0.6	STD–High Eff	89.5%	7.6
										MED–High Eff	91.7%	9.5
										HIGH–High Eff	91.7%	12.4

Table 35 – MCA/MOCP DETERMINATION NO C.O. OR UNPWRD C.O. **15 Tons**

UNIT	NOM. V–Ph–Hz	IFM TYPE	ELECTRIC HEATER		NO C.O. or UNPWR C.O.							
			Nom (kW)	FLA	NO P.E.				w/ P.E. (pwrd fr/unit)			
					MCA	MOCP	DISC. SIZE		MCA	MOCP	DISC. SIZE	
							FLA	LRA			FLA	LRA
17	208/230–3–60	STD	–	–	79.1	100.0	82	485	90.9	100.0	96	505
			18.8/25.0	52.1/60.1	79.1/84.5	100/100	82/82	485/485	90.9/99.3	100/100	96/96	505/505
			37.6/50.0	104.2/120.3	139.6/129.7	150/150	128/147	485/485	154.4/144.4	175/150	142/161	505/505
			56.3/75.0	156.4/180.4	165.8/189.8	175/200	188/216	485/485	180.5/204.5	200/225	202/230	505/505
		MED	–	–	81.8	100.0	85	502	93.6	110.0	99	522
			18.8/25.0	52.1/60.1	81.8/87.9	100/100	85/85	502/502	93.6/102.6	110/110	99/99	522/522
			37.6/50.0	104.2/120.3	143.0/133.1	150/150	132/150	502/502	157.8/147.8	175/175	145/164	522/522
			56.3/75.0	156.4/180.4	169.2/193.2	200/225	192/219	502/502	183.9/207.9	200/225	205/233	522/522
		HIGH	–	–	86.6	100.0	91	511	98.4	125.0	105	531
			18.8/25.0	52.1/60.1	86.6/93.9	100/100	91/91	511/511	98.6/108.6	125/125	105/105	531/531
			37.6/50.0	104.2/120.3	149.0/139.1	150/175	137/156	511/511	163.8/153.8	175/175	151/169	531/531
			56.3/75.0	156.4/180.4	175.2/199.2	200/225	197/225	511/511	189.9/213.9	200/250	211/238	531/531
	460–3–60	STD	–	–	41.7	50.0	43	243	47.9	60.0	50	255
			25.0	30.1	41.9	50.0	43	243	49.6	60.0	50	255
			50.0	60.1	64.4	70.0	73	243	72.1	80.0	80	255
			75.0	90.2	94.5	100	108	243	102.2	110	115	255
		MED	–	–	43.1	50.0	45	252	49.3	60.0	52	264
			25.0	30.1	43.6	50.0	45	252	51.4	60.0	52	264
			50.0	60.1	66.1	80.0	75	252	73.9	80.0	82	264
			75.0	90.2	96.2	100	109	252	104.0	110	116	264
		HIGH	–	–	45.7	60.0	48	256	51.9	60.0	55	268
			25.0	30.1	46.9	60.0	48	256	54.6	60.0	55	268
			50.0	60.1	69.4	80.0	78	256	77.1	80.0	85	268
			75.0	90.2	99.5	110	112	256	107.2	125	119	268
	575–3–60	STD	–	–	32.1	40.0	33	188	36.9	45.0	39	196
			24.8	23.9	33.4	40.0	33	188	39.4	45.0	39	196
			49.6	47.7	63.1	70.0	58	188	69.1	70.0	64	196
			74.4	71.6	75.1	80	86	188	81.1	90	91	196
		MED	–	–	32.1	40.0	33	188	36.9	45.0	39	196
			24.8	23.9	33.4	40.0	33	188	39.4	45.0	39	196
			49.6	47.7	63.1	70.0	58	188	69.1	70.0	64	196
			74.4	71.6	75.1	80	86	188	81.1	90	91	196
		HIGH	–	–	34.9	45.0	37	202	39.7	50.0	42	210
			24.8	23.9	36.9	45.0	37	202	42.9	50.0	42	210
			49.6	47.7	66.6	70.0	61	202	72.6	80.0	67	210
			74.4	71.6	78.6	90	89	202	84.6	90	94	210

LEGEND:

C.O. – Convenient outlet
DISC – Disconnect
FLA – Full load amps
IFM – Indoor fan motor
LRA – Locked rotor amps
MCA – Minimum circuit amps
MOCP – Maximum over current protection
P.E. – Power exhaust
UNPWRD C.O. – Unpowered convenient outlet

NOTES:

1. In compliance with NEC requirements for multimotor and combination load equipment (refer to NEC Articles 430 and 440), the overcurrent protective device for the unit shall be fuse or HACR breaker. Canadian units may be fuse or circuit breaker.
2. **Unbalanced 3-Phase Supply Voltage**
   Never operate a motor where a phase imbalance in supply voltage is greater than 2%. Use the following formula to determine the percentage of voltage imbalance.

$$\% \text{ Voltage Imbalance} = 100 \times \frac{\text{max voltage deviation from average voltage}}{\text{average voltage}}$$

Example: Supply voltage is 230-3-60

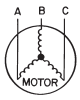

AB = 224 v
BC = 231 v
AC = 226 v

$$\text{Average Voltage} = \frac{(224 + 231 + 226)}{3} = \frac{681}{3} = 227$$

Determine maximum deviation from average voltage.
(AB) 227 – 224 = 3 v Maximum deviation is 4 v.
(BC) 231 – 227 = 4 v Determine percent of voltage imbalance.

$$\% \text{ Voltage Imbalance} = 100 \times \frac{4}{227} = 1.76\%$$

This amount of phase imbalance is satisfactory as it is below the maximum allowable 2%.

IMPORTANT: If the supply voltage phase imbalance is more than 2%, contact your local electric utility company immediately.

MCA/MOCP (cont.)

Table 36 – MCA/MOCP DETERMINATION NO C.O. OR UNPWRD C.O. **17.5 Tons**

UNIT	NOM. V–Ph–Hz	IFM TYPE	ELECTRIC HEATER		NO C.O. or UNPWR C.O.							
			Nom (kW)	FLA	NO P.E.				w/ P.E. (pwrd fr/unit)			
					MCA	MOCP	DISC. SIZE		MCA	MOCP	DISC. SIZE	
							FLA	LRA			FLA	LRA
20	208/230–3–60	STD	–	–	81.8	100.0	85	502	93.6	110.0	99	522
			18.8/25.0	52.1/60.1	81.8/87.9	100/100	85/85	502/502	93.6/102.6	110/110	99/99	522/522
			37.6/50.0	104.2/120.3	143.0/133.1	150/150	132/150	502/502	157.8/147.8	175/175	145/164	522/522
			56.3/75.0	156.4/180.4	169.2/193.2	200/225	192/219	502/502	183.9/207.9	200/225	205/233	522/522
		MED	–	–	86.6	100.0	91	511	98.4	125.0	105	531
			18.8/25.0	52.1/60.1	86.6/93.9	100/100	91/91	511/511	98.6/108.6	125/125	105/105	531/531
			37.6/50.0	104.2/120.3	149.0/139.1	150/175	137/156	511/511	163.8/153.8	175/175	151/169	531/531
			56.3/75.0	156.4/180.4	175.2/199.2	200/225	197/225	511/511	189.9/213.9	200/250	211/238	531/531
		HIGH	–	–	84.4	100.0	88	513	96.2	125.0	102	533
			18.8/25.0	52.1/60.1	84.4/91.1	100/100	88/88	513/513	96.2/105.9	125/125	102/102	533/533
			37.6/50.0	104.2/120.3	146.3/136.3	150/150	135/153	513/513	161.0/151.1	175/175	148/167	533/533
			56.3/75.0	156.4/180.4	172.4/196.4	200/225	195/222	513/513	187.2/211.2	200/225	208/236	533/533
		HIGH–Hi Eff	–	–	88.7	100.0	93	513	100.5	125.0	107	533
			18.8/25.0	52.1/60.1	88.7/96.5	100/100	93/93	513/513	101.3/111.3	125/125	107/107	533/533
			37.6/50.0	104.2/120.3	151.6/141.7	175/175	139/158	513/513	166.4/156.4	175/175	153/172	533/533
			56.3/75.0	156.4/180.4	177.8/201.8	200/225	200/227	513/513	192.5/216.5	200/250	213/241	533/533
	460–3–60	STD	–	–	43.1	50.0	45	252	49.3	60.0	52	264
			25.0	30.1	43.6	50.0	45	252	51.4	60.0	52	264
			50.0	60.1	66.1	80.0	75	252	73.9	80.0	82	264
			75.0	90.2	96.2	100	109	252	104.0	110	116	264
		MED	–	–	45.7	60.0	48	256	51.9	60.0	55	268
			25.0	30.1	46.9	60.0	48	256	54.6	60.0	55	268
			50.0	60.1	69.4	80.0	78	256	77.1	80.0	85	268
			75.0	90.2	99.5	110	112	256	107.2	125	119	268
		HIGH	–	–	44.7	60.0	47	257	50.9	60.0	54	269
			25.0	30.1	45.6	60.0	47	257	53.4	60.0	54	269
			50.0	60.1	68.1	80.0	76	257	75.9	80.0	84	269
			75.0	90.2	98.2	100	111	257	106.0	125	118	269
		HIGH–Hi Eff	–	–	46.9	60.0	49	257	53.1	60.0	56	269
			25.0	30.1	48.4	60.0	49	257	56.1	60.0	56	269
			50.0	60.1	70.9	80.0	79	257	78.6	80.0	86	269
			75.0	90.2	101.0	110	114	257	108.7	125	121	269
	575–3–60	STD	–	–	32.1	40.0	33	188	36.9	45.0	39	196
			24.8	23.9	33.4	40.0	33	188	39.4	45.0	39	196
			49.6	47.7	63.1	70.0	58	188	69.1	70.0	64	196
			74.4	71.6	75.1	80	86	188	81.1	90	91	196
		MED	–	–	34.9	45.0	37	202	39.7	50.0	42	210
			24.8	23.9	36.9	45.0	37	202	42.9	50.0	42	210
			49.6	47.7	66.6	70.0	61	202	72.6	80.0	67	210
			74.4	71.6	78.6	90	89	202	84.6	90	94	210
		HIGH	–	–	34.4	45.0	36	191	39.2	50.0	42	199
			24.8	23.9	36.3	45.0	36	191	42.3	50.0	42	199
			49.6	47.7	66.0	70.0	61	191	72.0	80.0	66	199
			74.4	71.6	78.0	90	88	191	84.0	90	94	199
		HIGH–Hi Eff	–	–	36.9	45.0	39	200	41.7	50.0	44	208
			24.8	23.9	39.4	45.0	39	200	45.4	50.0	44	208
			49.6	47.7	69.1	70.0	64	200	75.1	80.0	69	208
			74.4	71.6	81.1	90	91	200	87.1	90	97	208

Table 37 – MCA/MOCP DETERMINATION NO C.O. OR UNPWRD C.O. **20 Tons**

UNIT	NOM. V–Ph–Hz	IFM TYPE	ELECTRIC HEATER		NO C.O. or UNPWR C.O.							
					NO P.E.				w/ P.E. (pwrd fr/unit)			
			Nom (kW)	FLA	MCA	MOCP	DISC. SIZE		MCA	MOCP	DISC. SIZE	
							FLA	LRA			FLA	LRA
24	208/230–3–60	STD	–	–	110.6	150.0	113	534	122.4	150.0	127	554
			18.8/25.0	52.1/60.1	110.6/110.6	150/150	113/113	534/534	122.4/122.4	150/150	127/127	554/554
			37.6/50.0	104.2/120.3	149.0/139.1	150/175	137/156	534/534	163.8/153.8	175/175	151/169	554/554
			56.3/75.0	156.4/180.4	175.2/199.2	200/225	197/225	534/534	189.9/213.9	200/250	211/238	554/554
		MED	–	–	108.4	150.0	111	536	120.2	150.0	124	556
			18.8/25.0	52.1/60.1	108.4/108.4	150/150	111/111	536/536	120.2/120.2	150/150	124/124	556/556
			37.6/50.0	104.2/120.3	146.3/136.3	150/150	135/153	536/536	161.0/151.1	175/175	148/167	556/556
			56.3/75.0	156.4/180.4	172.4/196.4	200/225	195/222	536/536	187.2/211.2	200/225	208/236	556/556
		HIGH	–	–	115.0	150.0	118	572	126.8	150.0	132	592
			18.8/25.0	52.1/60.1	115.0/115.0	150/150	118/118	572/572	126.8/126.8	150/150	132/132	592/592
			37.6/50.0	104.2/120.3	154.5/144.6	175/175	142/161	572/572	169.3/159.3	175/175	156/174	592/592
			56.3/75.0	156.4/180.4	180.7/204.7	200/225	202/230	572/572	195.4/219.4	200/250	216/243	592/592
		MED–Hi Eff	–	–	112.7	150.0	116	536	124.5	150.0	129	556
			18.8/25.0	52.1/60.1	112.7/112.7	150/150	116/116	536/536	124.5/124.5	150/150	129/129	556/556
			37.6/50.0	104.2/120.3	151.6/141.7	175/175	139/158	536/536	166.4/156.4	175/175	153/172	556/556
			56.3/75.0	156.4/180.4	177.8/201.8	200/225	200/227	536/536	192.5/216.5	200/250	213/241	556/556
		HIGH–Hi Eff	–	–	124.1	150.0	129	615	135.9	175.0	142	635
			18.8/25.0	52.1/60.1	124.1/124.1	150/150	129/129	615/615	135.9/135.9	175/175	142/142	635/635
			37.6/50.0	104.2/120.3	165.9/155.9	175/175	153/171	615/615	180.6/170.7	200/175	166/185	635/635
			56.3/75.0	156.4/180.4	192.0/216.0	200/250	213/240	615/615	206.8/230.8	225/250	226/254	635/635
	460–3–60	STD	–	–	49.0	60.0	51	269	55.2	60.0	58	281
			25.0	30.1	49.0	60.0	51	269	55.2	60.0	58	281
			50.0	60.1	69.4	80.0	78	269	77.1	80.0	85	281
			75.0	90.2	99.5	110	112	269	107.2	125	119	281
		MED	–	–	48.0	60.0	50	270	54.2	60.0	57	282
			25.0	30.1	48.0	60.0	50	270	54.2	60.0	57	282
			50.0	60.1	68.1	80.0	76	270	75.9	80.0	84	282
			75.0	90.2	98.2	100	111	270	106.0	125	118	282
		HIGH	–	–	51.3	60.0	54	288	57.5	70.0	61	300
			25.0	30.1	51.3	60.0	54	288	57.5	70.0	61	300
			50.0	60.1	72.2	80.0	80	288	80.0	90.0	87	300
			75.0	90.2	102.3	125	115	288	110.1	125	122	300
		MED–Hi Eff	–	–	50.2	60.0	52	270	56.4	70.0	59	282
			25.0	30.1	50.2	60.0	52	270	56.4	70.0	59	282
			50.0	60.1	70.9	80.0	79	270	78.6	80.0	86	282
			75.0	90.2	101.0	110	114	270	108.7	125	121	282
		HIGH–Hi Eff	–	–	55.9	70.0	59	310	62.1	80.0	66	322
			25.0	30.1	55.9	70.0	59	310	63.3	80.0	66	322
			50.0	60.1	78.0	90.0	86	310	85.7	90.0	93	322
			75.0	90.2	108.1	125	120	310	115.8	125	127	322
	575–3–60	STD	–	–	38.6	50.0	40	224	43.4	50.0	46	232
			24.8	23.9	38.6	50.0	40	224	43.4	50.0	46	232
			49.6	47.7	66.6	70.0	61	224	72.6	80.0	67	232
			74.4	71.6	78.6	90	89	224	84.6	90	94	232
		MED	–	–	38.1	50.0	40	213	42.9	50.0	45	221
			24.8	23.9	38.1	50.0	40	213	42.9	50.0	45	221
			49.6	47.7	66.0	70.0	61	213	72.0	80.0	66	221
			74.4	71.6	78.0	90	88	213	84.0	90	94	221
		HIGH	–	–	40.8	50.0	43	239	45.6	60.0	48	247
			24.8	23.9	40.8	50.0	43	239	45.6	60.0	48	247
			49.6	47.7	69.4	70.0	64	239	75.4	80.0	69	247
			74.4	71.6	81.4	90	91	239	87.4	90	97	247
		MED–Hi Eff	–	–	40.6	50.0	42	222	45.4	60.0	48	230
			24.8	23.9	40.6	50.0	42	222	45.4	60.0	48	230
			49.6	47.7	69.1	70.0	64	222	75.1	80.0	69	230
			74.4	71.6	81.1	90	91	222	87.1	90	97	230
		HIGH–Hi Eff	–	–	42.5	50.0	45	249	47.3	60.0	50	257
			24.8	23.9	42.5	50.0	45	249	47.8	60.0	50	257
			49.6	47.7	71.5	80.0	66	249	77.5	80.0	71	257
			74.4	71.6	83.5	90	93	249	89.5	100	99	257

MCA/MOCP (cont.)

Table 38 – MCA/MOCP DETERMINATION NO C.O. OR UNPWRD C.O. **25 Tons**

UNIT	NOM. V–Ph–Hz	IFM TYPE	ELECTRIC HEATER		NO C.O. or UNPWR C.O.							
			Nom (kW)	FLA	NO P.E.				w/ P.E. (pwrd fr/unit)			
					MCA	MOCP	DISC. SIZE		MCA	MOCP	DISC. SIZE	
							FLA	LRA			FLA	LRA
28	208/230–3–60	STD	–	–	129.2	175.0	135	584	141.0	175.0	148	604
			18.8/25.0	52.1/60.1	129.2/129.2	175/175	135/135	584/584	141.0/141.0	175/175	148/148	604/604
			37.6/50.0	104.2/120.3	149.0/139.1	175/175	137/156	584/584	163.8/153.8	175/175	151/169	604/604
			56.3/75.0	156.4/180.4	175.2/199.2	200/225	197/225	584/584	189.9/213.9	200/250	211/238	604/604
		MED	–	–	127.0	175.0	132	586	138.8	175.0	146	606
			18.8/25.0	52.1/60.1	127.0/127.0	175/175	132/132	586/586	138.8/138.8	175/175	146/146	606/606
			37.6/50.0	104.2/120.3	146.3/136.3	175/175	135/153	586/586	161.0/151.1	175/175	148/167	606/606
			56.3/75.0	156.4/180.4	172.4/196.4	200/225	195/222	586/586	187.2/211.2	200/225	208/236	606/606
		HIGH	–	–	133.6	175.0	140	622	145.4	175.0	153	642
			18.8/25.0	52.1/60.1	133.6/133.6	175/175	140/140	622/622	145.4/145.4	175/175	153/153	642/642
			37.6/50.0	104.2/120.3	154.5/144.6	175/175	142/161	622/622	169.3/159.3	175/175	156/174	642/642
			56.3/75.0	156.4/180.4	180.7/204.7	200/225	202/230	622/622	195.4/219.4	200/250	216/243	642/642
		MED–Hi Eff	–	–	131.3	175.0	137	586	143.1	175.0	151	606
			18.8/25.0	52.1/60.1	131.3/131.3	175/175	137/137	586/586	143.1/143.1	175/175	151/151	606/606
			37.6/50.0	104.2/120.3	151.6/141.7	175/175	139/158	586/586	166.4/156.4	175/175	153/172	606/606
			56.3/75.0	156.4/180.4	177.8/201.8	200/225	200/227	586/586	192.5/216.5	200/250	213/241	606/606
		HIGH–Hi Eff	–	–	142.7	175.0	150	665	154.5	200.0	164	685
			18.8/25.0	52.1/60.1	142.7/142.7	175/175	150/150	665/665	154.5/154.5	200/200	164/164	685/685
			37.6/50.0	104.2/120.3	165.9/155.9	175/175	153/171	665/665	180.6/170.7	200/200	166/185	685/685
			56.3/75.0	156.4/180.4	192.0/216.0	200/250	213/240	665/665	206.8/230.8	225/250	226/254	685/685
	460–3–60	STD	–	–	52.9	60.0	55	299	59.1	70.0	63	311
			25.0	30.1	52.9	60.0	55	299	59.1	70.0	63	311
			50.0	60.1	69.4	80.0	78	299	77.1	80.0	85	311
			75.0	90.2	99.5	110	112	299	107.2	125	119	311
		MED	–	–	51.9	60.0	54	300	58.1	70.0	61	312
			25.0	30.1	51.9	60.0	54	300	58.1	70.0	61	312
			50.0	60.1	68.1	80.0	76	300	75.9	80.0	84	312
			75.0	90.2	98.2	100	111	300	106.0	125	118	312
		HIGH	–	–	55.2	60.0	58	318	61.4	70.0	65	330
			25.0	30.1	55.2	60.0	58	318	61.4	70.0	65	330
			50.0	60.1	72.2	80.0	80	318	80.0	90.0	87	330
			75.0	90.2	102.3	125	115	318	110.1	125	122	330
		MED–Hi Eff	–	–	54.1	60.0	57	300	60.3	70.0	64	312
			25.0	30.1	54.1	60.0	57	300	60.3	70.0	64	312
			50.0	60.1	70.9	80.0	79	300	78.6	80.0	86	312
			75.0	90.2	101.0	110	114	300	108.7	125	121	312
		HIGH–Hi Eff	–	–	59.8	70.0	63	340	66.0	80.0	70	352
			25.0	30.1	59.8	70.0	63	340	66.0	80.0	70	352
			50.0	60.1	78.0	90.0	86	340	85.7	90.0	93	352
			75.0	90.2	108.1	125	120	340	115.8	125	127	352
	575–3–60	STD	–	–	41.1	50.0	43	244	45.9	60.0	49	252
			24.8	23.9	41.1	50.0	43	244	45.9	60.0	49	252
			49.6	47.7	66.6	70.0	61	244	72.6	80.0	67	252
			74.4	71.6	78.6	90	89	244	84.6	90	94	252
		MED	–	–	40.6	50.0	42	233	45.4	60.0	48	241
			24.8	23.9	40.6	50.0	42	233	45.4	60.0	48	241
			49.6	47.7	66.0	70.0	61	233	72.0	80.0	66	241
			74.4	71.6	78.0	90	88	233	84.0	90	94	241
		HIGH	–	–	43.3	50.0	46	259	48.1	60.0	51	267
			24.8	23.9	43.3	50.0	46	259	48.1	60.0	51	267
			49.6	47.7	69.4	70.0	64	259	75.4	80.0	69	267
			74.4	71.6	81.4	90	91	259	87.4	90	97	267
		MED–Hi Eff	–	–	43.1	50.0	45	242	47.9	60.0	51	250
			24.8	23.9	43.1	50.0	45	242	47.9	60.0	51	250
			49.6	47.7	69.1	70.0	64	242	75.1	80.0	69	250
			74.4	71.6	81.1	90	91	242	87.1	90	97	250
		HIGH–Hi Eff	–	–	45.0	50.0	47	269	49.8	60.0	53	277
			24.8	23.9	45.0	50.0	47	269	49.8	60.0	53	277
			49.6	47.7	71.5	80.0	66	269	77.5	80.0	71	277
			74.4	71.6	83.5	90	93	269	89.5	100	99	277

Table 39 – MCA/MOCP DETERMINATION NO C.O. OR UNPWRD C.O. **27.5 Tons**

UNIT	NOM. V–Ph–Hz	IFM TYPE	ELECTRIC HEATER		NO C.O. or UNPWR C.O.							
			Nom (kW)	FLA	NO P.E.				w/ P.E. (pwrd fr/unit)			
					MCA	MOCP	DISC. SIZE		MCA	MOCP	DISC. SIZE	
							FLA	LRA			FLA	LRA
30	208/230–3–60	STD–Hi Eff	–	–	141.5	175.0	148	702	153.3	200.0	162	722
			18.8/25.0	52.1/60.1	141.5/141.5	175/175	148/148	702/702	153.3/153.3	200/200	162/162	722/722
			37.6/50.0	104.2/120.3	151.6/141.7	175/175	148/158	702/702	166.4/156.4	200/200	162/172	722/722
			56.3/75.0	156.4/180.4	177.8/201.8	200/225	200/227	702/702	192.5/216.5	200/250	213/241	722/722
		MED–Hi Eff	–	–	152.9	200.0	161	781	164.7	200.0	175	801
			18.8/25.0	52.1/60.1	152.9/152.9	200/200	161/161	781/781	164.7/164.7	200/200	175/175	801/801
			37.6/50.0	104.2/120.3	165.9/155.9	200/200	161/171	781/781	180.6/170.7	200/200	175/185	801/801
			56.3/75.0	156.4/180.4	192.0/216.0	200/250	213/240	781/781	206.8/230.8	225/250	226/254	801/801
		HIGH–Hi Eff	–	–	154.8	200.0	163	812	166.6	200.0	177	832
			18.8/25.0	52.1/60.1	154.8/154.8	200/200	163/163	812/812	166.6/166.6	200/200	177/177	832/832
			37.6/50.0	104.2/120.3	168.3/158.3	200/200	163/173	812/812	183.0/173.1	200/200	177/187	832/832
			56.3/75.0	156.4/180.4	194.4/218.4	225/250	215/242	812/812	209.2/233.2	225/250	228/256	832/832
	460–3–60	STD–Hi Eff	–	–	66.0	80.0	69	354	72.2	90.0	76	366
			25.0	30.1	66.0	80.0	69	354	72.2	90.0	76	366
			50.0	60.1	70.9	80.0	79	354	78.6	90.0	86	366
			75.0	90.2	101.0	110	114	354	108.7	125	121	366
		MED–Hi Eff	–	–	71.7	90.0	76	394	77.9	100.0	83	406
			25.0	30.1	71.7	90.0	76	394	77.9	100.0	83	406
			50.0	60.1	78.0	90.0	86	394	85.7	100.0	93	406
			75.0	90.2	108.1	125	120	394	115.8	125	127	406
		HIGH–Hi Eff	–	–	72.6	90.0	77	409	78.8	100.0	84	421
			25.0	30.1	72.6	90.0	77	409	78.8	100.0	84	421
			50.0	60.1	79.1	90.0	87	409	86.9	100.0	94	421
			75.0	90.2	109.2	125	121	409	117.0	125	128	421
	575–3–60	STD–Hi Eff	–	–	56.0	70.0	59	264	60.8	80.0	64	272
			24.8	23.9	56.0	70.0	59	264	60.8	80.0	64	272
			49.6	47.7	69.1	70.0	64	264	75.1	80.0	69	272
			74.4	71.6	81.1	90	91	264	87.1	90	97	272
		MED–Hi Eff	–	–	57.9	70.0	61	291	62.7	80.0	66	299
			24.8	23.9	57.9	70.0	61	291	62.7	80.0	66	299
			49.6	47.7	71.5	80.0	66	291	77.5	80.0	71	299
			74.4	71.6	83.5	90	93	291	89.5	100	99	299
		HIGH–Hi Eff	–	–	60.8	80.0	64	302	65.6	80.0	70	310
			24.8	23.9	60.8	80.0	64	302	65.6	80.0	70	310
			49.6	47.7	75.1	80.0	69	302	81.1	90.0	75	310
			74.4	71.6	87.1	100	97	302	93.1	100	102	310

MCA/MOCP (cont.)

Table 40 – MCA/MOCP DETERMINATION W/PWRD C.O. — 15 Tons

UNIT	NOM. V–Ph–Hz	IFM TYPE	ELECTRIC HEATER Nom (kW)	ELECTRIC HEATER FLA	w/ PWRD C.O. NO P.E. MCA	NO P.E. MOCP	NO P.E. DISC. SIZE FLA	NO P.E. DISC. SIZE LRA	w/ P.E. (pwrd fr/unit) MCA	w/ P.E. MOCP	w/ P.E. DISC. SIZE FLA	w/ P.E. DISC. SIZE LRA
17	208/230–3–60	STD	–	–	83.9	100.0	88	490	95.7	125.0	101	510
			18.8/25.0	52.1/60.1	83.9/90.5	100/100	88/88	490/490	95.7/105.3	125/125	101/101	510/510
			37.6/50.0	104.2/120.3	145.6/135.7	150/150	134/152	490/490	160.4/150.4	175/175	148/166	510/510
			56.3/75.0	156.4/180.4	171.8/195.8	200/225	194/222	490/490	186.5/210.5	200/225	208/235	510/510
		MED	–	–	86.6	100.0	91	507	98.4	125.0	105	527
			18.8/25.0	52.1/60.1	86.6/93.9	100/100	91/91	507/507	98.6/108.6	125/125	105/105	527/527
			37.6/50.0	104.2/120.3	149.0/139.1	150/150	137/156	507/507	163.8/153.8	175/175	151/169	527/527
			56.3/75.0	156.4/180.4	175.2/199.2	200/225	197/225	507/507	189.9/213.9	200/225	211/238	527/527
		HIGH	–	–	91.4	100.0	96	516	103.2	125.0	110	536
			18.8/25.0	52.1/60.1	91.4/99.9	100/100	96/96	516/516	104.6/114.6	125/125	110/110	536/536
			37.6/50.0	104.2/120.3	155.0/145.1	175/175	143/161	516/516	169.8/159.8	175/175	156/175	536/536
			56.3/75.0	156.4/180.4	181.2/205.2	200/225	203/230	516/516	195.9/219.9	200/250	216/244	536/536
	460–3–60	STD	–	–	43.9	60.0	46	245	50.1	60.0	53	257
			25.0	30.1	44.6	60.0	46	245	52.4	60.0	53	257
			50.0	60.1	67.1	70.0	76	245	74.9	80.0	83	257
			75.0	90.2	97.2	100	110	245	105.0	110	117	257
		MED	–	–	45.3	60.0	47	254	51.5	60.0	54	266
			25.0	30.1	46.4	60.0	47	254	54.1	60.0	54	266
			50.0	60.1	68.9	80.0	77	254	76.6	80.0	84	266
			75.0	90.2	99.0	100	112	254	106.7	110	119	266
		HIGH	–	–	47.9	60.0	50	258	54.1	60.0	57	270
			25.0	30.1	49.6	60.0	50	258	57.4	60.0	57	270
			50.0	60.1	72.1	80.0	80	258	79.9	80.0	87	270
			75.0	90.2	102.2	110	115	258	110.0	125	122	270
	575–3–60	STD	–	–	33.8	45.0	35	190	38.6	50.0	41	198
			24.8	23.9	35.5	45.0	35	190	41.5	50.0	41	198
			49.6	47.7	65.3	70.0	60	190	71.3	80.0	66	198
			74.4	71.6	77.2	80	88	190	83.2	90	93	198
		MED	–	–	33.8	45.0	35	190	38.6	50.0	41	198
			24.8	23.9	35.5	45.0	35	190	41.5	50.0	41	198
			49.6	47.7	65.3	70.0	60	190	71.3	80.0	66	198
			74.4	71.6	77.2	80	88	190	83.2	90	93	198
		HIGH	–	–	36.6	45.0	39	204	41.4	50.0	44	212
			24.8	23.9	39.0	45.0	39	204	45.0	50.0	44	212
			49.6	47.7	68.8	70.0	63	204	74.8	80.0	69	212
			74.4	71.6	80.7	90	91	204	86.7	90	96	212

LEGEND:

C.O. – Convenient outlet
DISC – Disconnect
FLA – Full load amps
IFM – Indoor fan motor
LRA – Locked rotor amps
MCA – Minimum circuit amps
MOCP – Maximum over current protection
P.E. – Power exhaust
UNPWRD C.O. – Unpowered convenient outlet

NOTES:

1. In compliance with NEC requirements for multimotor and combination load equipment (refer to NEC Articles 430 and 440), the overcurrent protective device for the unit shall be fuse or HACR breaker. Canadian units may be fuse or circuit breaker.
2. **Unbalanced 3-Phase Supply Voltage**
   Never operate a motor where a phase imbalance in supply voltage is greater than 2%. Use the following formula to determine the percentage of voltage imbalance.

$$\% \text{ Voltage Imbalance} = 100 \times \frac{\text{max voltage deviation from average voltage}}{\text{average voltage}}$$

Example: Supply voltage is 230-3-60

AB = 224 v
BC = 231 v
AC = 226 v

$$\text{Average Voltage} = \frac{(224 + 231 + 226)}{3} = \frac{681}{3} = 227$$

Determine maximum deviation from average voltage.

(AB) 227 – 224 = 3 v Maximum deviation is 4 v.
(BC) 231 – 227 = 4 v Determine percent of voltage imbalance.

$$\% \text{ Voltage Imbalance} = 100 \times \frac{4}{227} = 1.76\%$$

This amount of phase imbalance is satisfactory as it is below the maximum allowable 2%.

IMPORTANT: If the supply voltage phase imbalance is more than 2%, contact your local electric utility company immediately.

Table 41 – MCA/MOCP DETERMINATION W/PWRD C.O. **17.5 Tons**

UNIT	NOM. V–Ph–Hz	IFM TYPE	ELECTRIC HEATER		w/ PWRD C.O.							
			Nom (kW)	FLA	NO P.E.				w/ P.E. (pwrd fr/unit)			
					MCA	MOCP	DISC. SIZE		MCA	MOCP	DISC. SIZE	
							FLA	LRA			FLA	LRA
20	208/230–3–60	STD	–	–	86.6	100.0	91	507	98.4	125.0	105	527
			18.8/25.0	52.1/60.1	86.6/93.9	100/100	91/91	507/507	98.6/108.6	125/125	105/105	527/527
			37.6/50.0	104.2/120.3	149.0/139.1	150/150	137/156	507/507	163.8/153.8	175/175	151/169	527/527
			56.3/75.0	156.4/180.4	175.2/199.2	200/225	197/225	507/507	189.9/213.9	200/225	211/238	527/527
		MED	–	–	91.4	100.0	96	516	103.2	125.0	110	536
			18.8/25.0	52.1/60.1	91.4/99.9	100/100	96/96	516/516	104.6/114.6	125/125	110/110	536/536
			37.6/50.0	104.2/120.3	155.0/145.1	175/175	143/161	516/516	169.8/159.8	175/175	156/175	536/536
			56.3/75.0	156.4/180.4	181.2/205.2	200/225	203/230	516/516	195.9/219.9	200/250	216/244	536/536
		HIGH	–	–	89.2	100.0	94	518	101.0	125.0	108	538
			18.8/25.0	52.1/60.1	89.2/97.1	100/100	94/94	518/518	101.9/111.9	125/125	108/108	538/538
			37.6/50.0	104.2/120.3	152.3/142.3	175/175	140/159	518/518	167.0/157.1	175/175	154/172	538/538
			56.3/75.0	156.4/180.4	178.4/202.4	200/225	200/228	518/518	193.2/217.2	200/250	214/241	538/538
		HIGH–Hi Eff	–	–	93.5	110.0	99	518	105.3	125.0	112	538
			18.8/25.0	52.1/60.1	93.5/102.5	110/110	99/99	518/518	107.3/117.3	125/125	112/112	538/538
			37.6/50.0	104.2/120.3	157.6/147.7	175/175	145/164	518/518	172.4/162.4	175/175	159/177	538/538
			56.3/75.0	156.4/180.4	183.8/207.8	200/225	205/233	518/518	198.5/222.5	200/250	219/246	538/538
	460–3–60	STD	–	–	45.3	60.0	47	254	51.5	60.0	54	266
			25.0	30.1	46.4	60.0	47	254	54.1	60.0	54	266
			50.0	60.1	68.9	80.0	77	254	76.6	80.0	84	266
			75.0	90.2	99.0	100	112	254	106.7	110	119	266
		MED	–	–	47.9	60.0	50	258	54.1	60.0	57	270
			25.0	30.1	49.6	60.0	50	258	57.4	60.0	57	270
			50.0	60.1	72.1	80.0	80	258	79.9	80.0	87	270
			75.0	90.2	102.2	110	115	258	110.0	125	122	270
		HIGH	–	–	46.9	60.0	49	259	53.1	60.0	56	271
			25.0	30.1	48.4	60.0	49	259	56.1	60.0	56	271
			50.0	60.1	70.9	80.0	79	259	78.6	80.0	86	271
			75.0	90.2	101.0	110	114	259	108.7	125	121	271
		HIGH–Hi Eff	–	–	49.1	60.0	52	259	55.3	60.0	59	271
			25.0	30.1	51.1	60.0	52	259	58.9	60.0	59	271
			50.0	60.1	73.6	80.0	82	259	81.4	90.0	89	271
			75.0	90.2	103.7	125	116	259	111.5	125	123	271
	575–3–60	STD	–	–	33.8	45.0	35	190	38.6	50.0	41	198
			24.8	23.9	35.5	45.0	35	190	41.5	50.0	41	198
			49.6	47.7	65.3	70.0	60	190	71.3	80.0	66	198
			74.4	71.6	77.2	80	88	190	83.2	90	93	198
		MED	–	–	36.6	45.0	39	204	41.4	50.0	44	212
			24.8	23.9	39.0	45.0	39	204	45.0	50.0	44	212
			49.6	47.7	68.8	70.0	63	204	74.8	80.0	69	212
			74.4	71.6	80.7	90	91	204	86.7	90	96	212
		HIGH	–	–	36.1	45.0	38	193	40.9	50.0	43	201
			24.8	23.9	38.4	45.0	38	193	44.4	50.0	43	201
			49.6	47.7	68.1	70.0	63	193	74.1	80.0	68	201
			74.4	71.6	80.1	90	90	193	86.1	90	96	201
		HIGH–Hi Eff	–	–	38.6	50.0	41	202	43.4	50.0	46	210
			24.8	23.9	41.5	50.0	41	202	47.5	50.0	46	210
			49.6	47.7	71.3	80.0	66	202	77.3	80.0	71	210
			74.4	71.6	83.2	90	93	202	89.2	90	99	210

MCA/MOCP (cont.)

Table 42 – MCA/MOCP DETERMINATION W/PWRD C.O. **20 Tons**

UNIT	NOM. V–Ph–Hz	IFM TYPE	ELECTRIC HEATER		w/ PWRD C.O.							
			Nom (kW)	FLA	NO P.E.				w/ P.E. (pwrd fr/unit)			
					MCA	MOCP	DISC. SIZE		MCA	MOCP	DISC. SIZE	
							FLA	LRA			FLA	LRA
24	208/230–3–60	STD	–	–	115.4	150.0	119	539	127.2	175.0	132	559
			18.8/25.0	52.1/60.1	115.4/115.4	150/150	119/119	539/539	127.2/127.2	175/175	132/132	559/559
			37.6/50.0	104.2/120.3	155.0/145.1	175/175	143/161	539/539	169.8/159.8	175/175	156/175	559/559
			56.3/75.0	156.4/180.4	181.2/205.2	200/225	203/230	539/539	195.9/219.9	200/250	216/244	559/559
		MED	–	–	113.2	150.0	116	541	125.0	150.0	130	561
			18.8/25.0	52.1/60.1	113.2/113.2	150/150	116/116	541/541	125.0/125.0	150/150	130/130	561/561
			37.6/50.0	104.2/120.3	152.3/142.3	175/175	140/159	541/541	167.0/157.1	175/175	154/172	561/561
			56.3/75.0	156.4/180.4	178.4/202.4	200/225	200/228	541/541	193.2/217.2	200/250	214/241	561/561
		HIGH	–	–	119.8	150.0	124	577	131.6	175.0	138	597
			18.8/25.0	52.1/60.1	119.8/119.8	150/150	124/124	577/577	131.6/131.6	175/175	138/138	597/597
			37.6/50.0	104.2/120.3	160.5/150.6	175/175	148/166	577/577	175.3/165.3	200/175	161/180	597/597
			56.3/75.0	156.4/180.4	186.7/210.7	200/250	208/235	577/577	201.4/225.4	225/250	221/249	597/597
		MED–Hi Eff	–	–	117.5	150.0	121	541	129.3	175.0	135	561
			18.8/25.0	52.1/60.1	117.5/117.5	150/150	121/121	541/541	129.3/129.3	175/175	135/135	561/561
			37.6/50.0	104.2/120.3	157.6/147.7	175/175	145/164	541/541	172.4/162.4	175/175	159/177	561/561
			56.3/75.0	156.4/180.4	183.8/207.8	200/225	205/233	541/541	198.5/222.5	200/250	219/246	561/561
		HIGH–Hi Eff	–	–	128.9	175.0	134	620	140.7	175.0	148	640
			18.8/25.0	52.1/60.1	128.9/128.9	175/175	134/134	620/620	140.7/140.7	175/175	148/148	640/640
			37.6/50.0	104.2/120.3	171.9/161.9	175/175	158/177	620/620	186.6/176.7	200/200	172/190	640/640
			56.3/75.0	156.4/180.4	198.0/222.0	225/250	218/246	620/620	212.8/236.8	225/250	232/259	640/640
	460–3–60	STD	–	–	51.2	60.0	53	271	57.4	70.0	61	283
			25.0	30.1	51.2	60.0	53	271	57.4	70.0	61	283
			50.0	60.1	72.1	80.0	80	271	79.9	80.0	87	283
			75.0	90.2	102.2	110	115	271	110.0	125	122	283
		MED	–	–	50.2	60.0	52	272	56.4	70.0	59	284
			25.0	30.1	50.2	60.0	52	272	56.4	70.0	59	284
			50.0	60.1	70.9	80.0	79	272	78.6	80.0	86	284
			75.0	90.2	101.0	110	114	272	108.7	125	121	284
		HIGH	–	–	53.5	60.0	56	290	59.7	70.0	63	302
			25.0	30.1	53.5	60.0	56	290	60.3	70.0	63	302
			50.0	60.1	75.0	80.0	83	290	82.7	90.0	90	302
			75.0	90.2	105.1	125	117	290	112.8	125	125	302
		MED–Hi Eff	–	–	52.4	60.0	55	272	58.6	70.0	62	284
			25.0	30.1	52.4	60.0	55	272	58.9	70.0	62	284
			50.0	60.1	73.6	80.0	82	272	81.4	90.0	89	284
			75.0	90.2	103.7	125	116	272	111.5	125	123	284
		HIGH–Hi Eff	–	–	58.1	70.0	61	312	64.3	80.0	69	324
			25.0	30.1	58.3	70.0	61	312	66.0	80.0	69	324
			50.0	60.1	80.7	90.0	88	312	88.5	100.0	95	324
			75.0	90.2	110.8	125	123	312	118.6	125	130	324
	575–3–60	STD	–	–	40.3	50.0	42	226	45.1	50.0	48	234
			24.8	23.9	40.3	50.0	42	226	45.1	50.0	48	234
			49.6	47.7	68.8	70.0	63	226	74.8	80.0	69	234
			74.4	71.6	80.7	90	91	226	86.7	90	96	234
		MED	–	–	39.8	50.0	42	215	44.6	50.0	47	223
			24.8	23.9	39.8	50.0	42	215	44.6	50.0	47	223
			49.6	47.7	68.1	70.0	63	215	74.1	80.0	68	223
			74.4	71.6	80.1	90	90	215	86.1	90	96	223
		HIGH	–	–	42.5	50.0	45	241	47.3	60.0	50	249
			24.8	23.9	42.5	50.0	45	241	47.8	60.0	50	249
			49.6	47.7	71.5	80.0	66	241	77.5	80.0	71	249
			74.4	71.6	83.5	90	93	241	89.5	90	99	249
		MED–Hi Eff	–	–	42.3	50.0	44	224	47.1	60.0	50	232
			24.8	23.9	42.3	50.0	44	224	47.5	60.0	50	232
			49.6	47.7	71.3	80.0	66	224	77.3	80.0	71	232
			74.4	71.6	83.2	90	93	224	89.2	90	99	232
		HIGH–Hi Eff	–	–	44.2	50.0	47	251	49.0	60.0	52	259
			24.8	23.9	44.2	50.0	47	251	49.9	60.0	52	259
			49.6	47.7	73.6	80.0	68	251	79.6	80.0	73	259
			74.4	71.6	85.6	90	95	251	91.6	100	101	259

Table 43 – MCA/MOCP DETERMINATION W/PWRD C.O. **25 Tons**

UNIT	NOM. V–Ph–Hz	IFM TYPE	ELECTRIC HEATER		w/ PWRD C.O.							
			Nom (kW)	FLA	NO P.E.				w/ P.E. (pwrd fr/unit)			
					MCA	MOCP	DISC. SIZE		MCA	MOCP	DISC. SIZE	
							FLA	LRA			FLA	LRA
28	208/230–3–60	STD	–	–	134.0	175.0	140	589	145.8	175.0	154	609
			18.8/25.0	52.1/60.1	134.0/134.0	175/175	140/140	589/589	145.8/145.8	175/175	154/154	609/609
			37.6/50.0	104.2/120.3	155.0/145.1	175/175	143/161	589/589	169.8/159.8	175/175	156/175	609/609
			56.3/75.0	156.4/180.4	181.2/205.2	200/225	203/230	589/589	195.9/219.9	200/250	216/244	609/609
		MED	–	–	131.8	175.0	138	591	143.6	175.0	151	611
			18.8/25.0	52.1/60.1	131.8/131.8	175/175	138/138	591/591	143.6/143.6	175/175	151/151	611/611
			37.6/50.0	104.2/120.3	152.3/142.3	175/175	140/159	591/591	167.0/157.1	175/175	154/172	611/611
			56.3/75.0	156.4/180.4	178.4/202.4	200/225	200/228	591/591	193.2/217.2	200/250	214/241	611/611
		HIGH	–	–	138.4	175.0	145	627	150.2	175.0	159	647
			18.8/25.0	52.1/60.1	138.4/138.4	175/175	145/145	627/627	150.2/150.2	175/175	159/159	647/647
			37.6/50.0	104.2/120.3	160.5/150.6	175/175	148/166	627/627	175.3/165.3	200/175	161/180	647/647
			56.3/75.0	156.4/180.4	186.7/210.7	200/250	208/235	627/627	201.4/225.4	225/250	221/249	647/647
		MED–Hi Eff	–	–	136.1	175.0	143	591	147.9	175.0	156	611
			18.8/25.0	52.1/60.1	136.1/136.1	175/175	143/143	591/591	147.9/147.9	175/175	156/156	611/611
			37.6/50.0	104.2/120.3	157.6/147.7	175/175	145/164	591/591	172.4/162.4	175/175	159/177	611/611
			56.3/75.0	156.4/180.4	183.8/207.8	200/225	205/233	591/591	198.5/222.5	200/250	219/246	611/611
		HIGH–Hi Eff	–	–	147.5	175.0	156	670	159.3	200.0	169	690
			18.8/25.0	52.1/60.1	147.5/147.5	175/175	156/156	670/670	159.3/159.3	200/200	169/169	690/690
			37.6/50.0	104.2/120.3	171.9/161.9	175/175	158/177	670/670	186.6/176.7	200/200	172/190	690/690
			56.3/75.0	156.4/180.4	198.0/222.0	225/250	218/246	670/670	212.8/236.8	225/250	232/259	690/690
	460–3–60	STD	–	–	55.1	60.0	58	301	61.3	70.0	65	313
			25.0	30.1	55.1	60.0	58	301	61.3	70.0	65	313
			50.0	60.1	72.1	80.0	80	301	79.9	80.0	87	313
			75.0	90.2	102.2	110	115	301	110.0	125	122	313
		MED	–	–	54.1	60.0	57	302	60.3	70.0	64	314
			25.0	30.1	54.1	60.0	57	302	60.3	70.0	64	314
			50.0	60.1	70.9	80.0	79	302	78.6	80.0	86	314
			75.0	90.2	101.0	110	114	302	108.7	125	121	314
		HIGH	–	–	57.4	70.0	61	320	63.6	80.0	68	332
			25.0	30.1	57.4	70.0	61	320	63.6	80.0	68	332
			50.0	60.1	75.0	80.0	83	320	82.7	90.0	90	332
			75.0	90.2	105.1	125	117	320	112.8	125	125	332
		MED–Hi Eff	–	–	56.3	70.0	59	302	62.5	80.0	66	314
			25.0	30.1	56.3	70.0	59	302	62.5	80.0	66	314
			50.0	60.1	73.6	80.0	82	302	81.4	90.0	89	314
			75.0	90.2	103.7	125	116	302	111.5	125	123	314
		HIGH–Hi Eff	–	–	62.0	80.0	66	342	68.2	80.0	73	354
			25.0	30.1	62.0	80.0	66	342	68.2	80.0	73	354
			50.0	60.1	80.7	90.0	88	342	88.5	100.0	95	354
			75.0	90.2	110.8	125	123	342	118.6	125	130	354
	575–3–60	STD	–	–	42.8	50.0	45	246	47.6	60.0	50	254
			24.8	23.9	42.8	50.0	45	246	47.6	60.0	50	254
			49.6	47.7	68.8	70.0	63	246	74.8	80.0	69	254
			74.4	71.6	80.7	90	91	246	86.7	90	96	254
		MED	–	–	42.3	50.0	44	235	47.1	60.0	50	243
			24.8	23.9	42.3	50.0	44	235	47.1	60.0	50	243
			49.6	47.7	68.1	70.0	63	235	74.1	80.0	68	243
			74.4	71.6	80.1	90	90	235	86.1	90	96	243
		HIGH	–	–	45.0	50.0	47	261	49.8	60.0	53	269
			24.8	23.9	45.0	50.0	47	261	49.8	60.0	53	269
			49.6	47.7	71.5	80.0	66	261	77.5	80.0	71	269
			74.4	71.6	83.5	90	93	261	89.5	90	99	269
		MED–Hi Eff	–	–	44.8	50.0	47	244	49.6	60.0	53	252
			24.8	23.9	44.8	50.0	47	244	49.6	60.0	53	252
			49.6	47.7	71.3	80.0	66	244	77.3	80.0	71	252
			74.4	71.6	83.2	90	93	244	89.2	90	99	252
		HIGH–Hi Eff	–	–	46.7	60.0	49	271	51.5	60.0	55	279
			24.8	23.9	46.7	60.0	49	271	51.5	60.0	55	279
			49.6	47.7	73.6	80.0	68	271	79.6	80.0	73	279
			74.4	71.6	85.6	90	95	271	91.6	100	101	279

Table 44 – MCA/MOCP DETERMINATION W/PWRD C.O. **27.5 Tons**

UNIT	NOM. V–Ph–Hz	IFM TYPE	ELECTRIC HEATER		w/ PWRD C.O.							
			Nom (kW)	FLA	NO P.E.				w/ P.E. (pwrd fr/unit)			
					MCA	MOCP	DISC. SIZE		MCA	MOCP	DISC. SIZE	
							FLA	LRA			FLA	LRA
30	208/230–3–60	STD–Hi Eff	–	–	146.3	175.0	154	707	158.1	200.0	167	727
			18.8/25.0	52.1/60.1	146.3/146.3	175/175	154/154	707/707	158.1/158.1	200/200	167/167	727/727
			37.6/50.0	104.2/120.3	157.6/147.7	175/175	154/164	707/707	172.4/162.4	200/200	167/177	727/727
			56.3/75.0	156.4/180.4	183.8/207.8	200/225	205/233	707/707	198.5/222.5	200/250	219/246	727/727
		MED–Hi Eff	–	–	157.7	200.0	167	786	169.5	200.0	180	806
			18.8/25.0	52.1/60.1	157.7/157.7	200/200	167/167	786/786	169.5/169.5	200/200	180/180	806/806
			37.6/50.0	104.2/120.3	171.9/161.9	200/200	167/177	786/786	186.6/176.7	200/200	180/190	806/806
			56.3/75.0	156.4/180.4	198.0/222.0	225/250	218/246	786/786	212.8/236.8	225/250	232/259	806/806
		HIGH–Hi Eff	–	–	159.6	200.0	169	817	171.4	200.0	182	837
			18.8/25.0	52.1/60.1	159.6/159.6	200/200	169/169	817/817	171.4/171.4	200/200	182/182	837/837
			37.6/50.0	104.2/120.3	174.3/164.3	200/200	169/179	817/817	189.0/179.1	200/200	182/192	837/837
			56.3/75.0	156.4/180.4	200.4/224.4	225/250	220/248	817/817	215.2/239.2	225/250	234/262	837/837
	460–3–60	STD–Hi Eff	–	–	68.2	90.0	72	356	74.4	90.0	79	368
			25.0	30.1	68.2	90.0	72	356	74.4	90.0	79	368
			50.0	60.1	73.6	90.0	82	356	81.4	90.0	89	368
			75.0	90.2	103.7	125	116	356	111.5	125	123	368
		MED–Hi Eff	–	–	73.9	90.0	78	396	80.1	100.0	85	408
			25.0	30.1	73.9	90.0	78	396	80.1	100.0	85	408
			50.0	60.1	80.7	90.0	88	396	88.5	100.0	95	408
			75.0	90.2	110.8	125	123	396	118.6	125	130	408
		HIGH–Hi Eff	–	–	74.8	90.0	79	411	81.0	100.0	86	423
			25.0	30.1	74.8	90.0	79	411	81.0	100.0	86	423
			50.0	60.1	81.9	90.0	89	411	89.6	100.0	96	423
			75.0	90.2	112.0	125	124	411	119.7	125	131	423
	575–3–60	STD–Hi Eff	–	–	57.7	70.0	61	266	62.5	80.0	66	274
			24.8	23.9	57.7	70.0	61	266	62.5	80.0	66	274
			49.6	47.7	71.3	80.0	66	266	77.3	80.0	71	274
			74.4	71.6	83.2	90	93	266	89.2	90	99	274
		MED–Hi Eff	–	–	59.6	70.0	63	293	64.4	80.0	68	301
			24.8	23.9	59.6	70.0	63	293	64.4	80.0	68	301
			49.6	47.7	73.6	80.0	68	293	79.6	80.0	73	301
			74.4	71.6	85.6	90	95	293	91.6	100	101	301
		HIGH–Hi Eff	–	–	62.5	80.0	66	304	67.3	80.0	72	312
			24.8	23.9	62.5	80.0	66	304	67.3	80.0	72	312
			49.6	47.7	77.3	80.0	71	304	83.3	90.0	77	312
			74.4	71.6	89.2	100	99	304	95.2	100	104	312

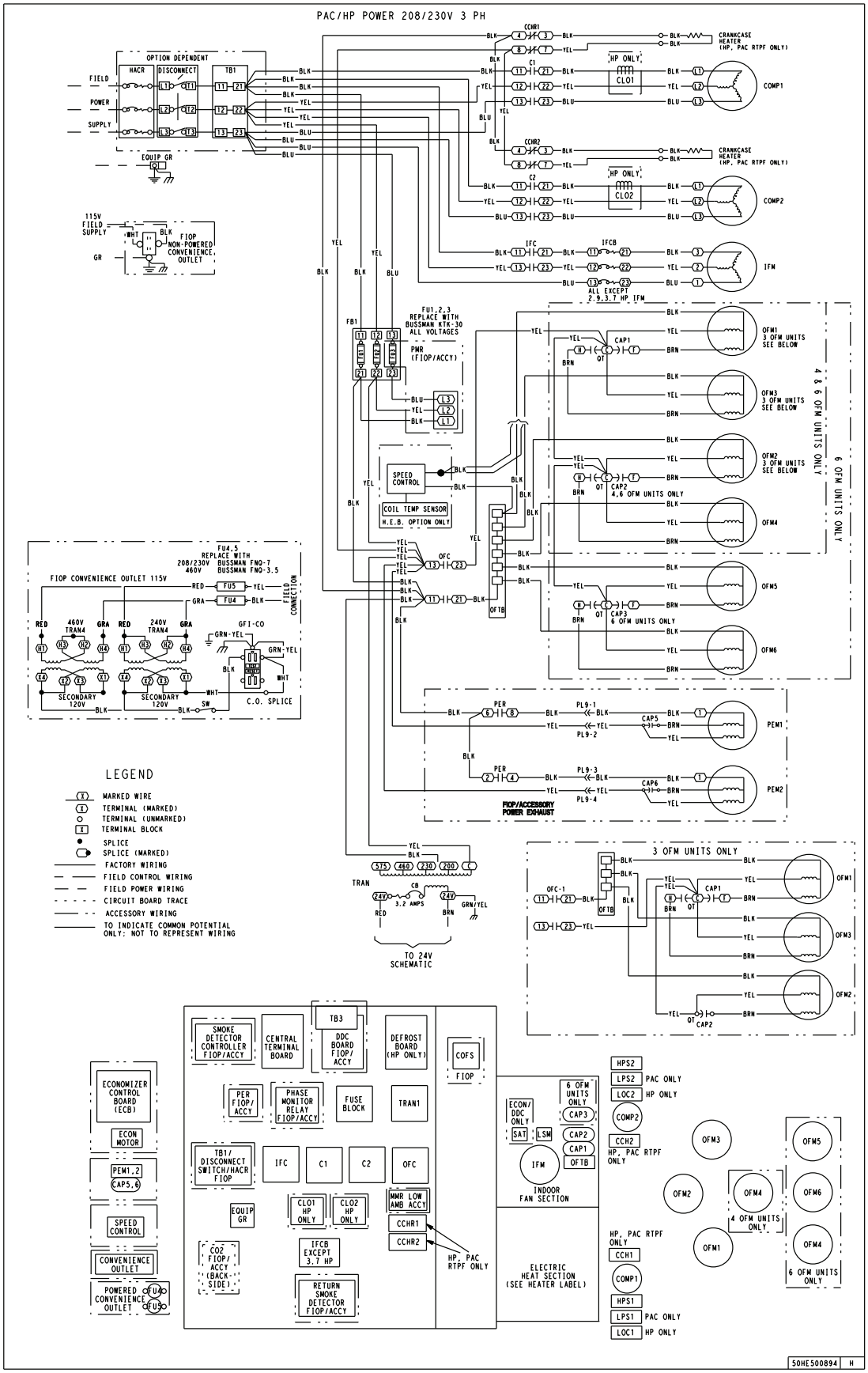

C11232

Fig. 15 – Typical Power Diagram (All Voltages)

TYPICAL WIRING DIAGRAMS (cont.)

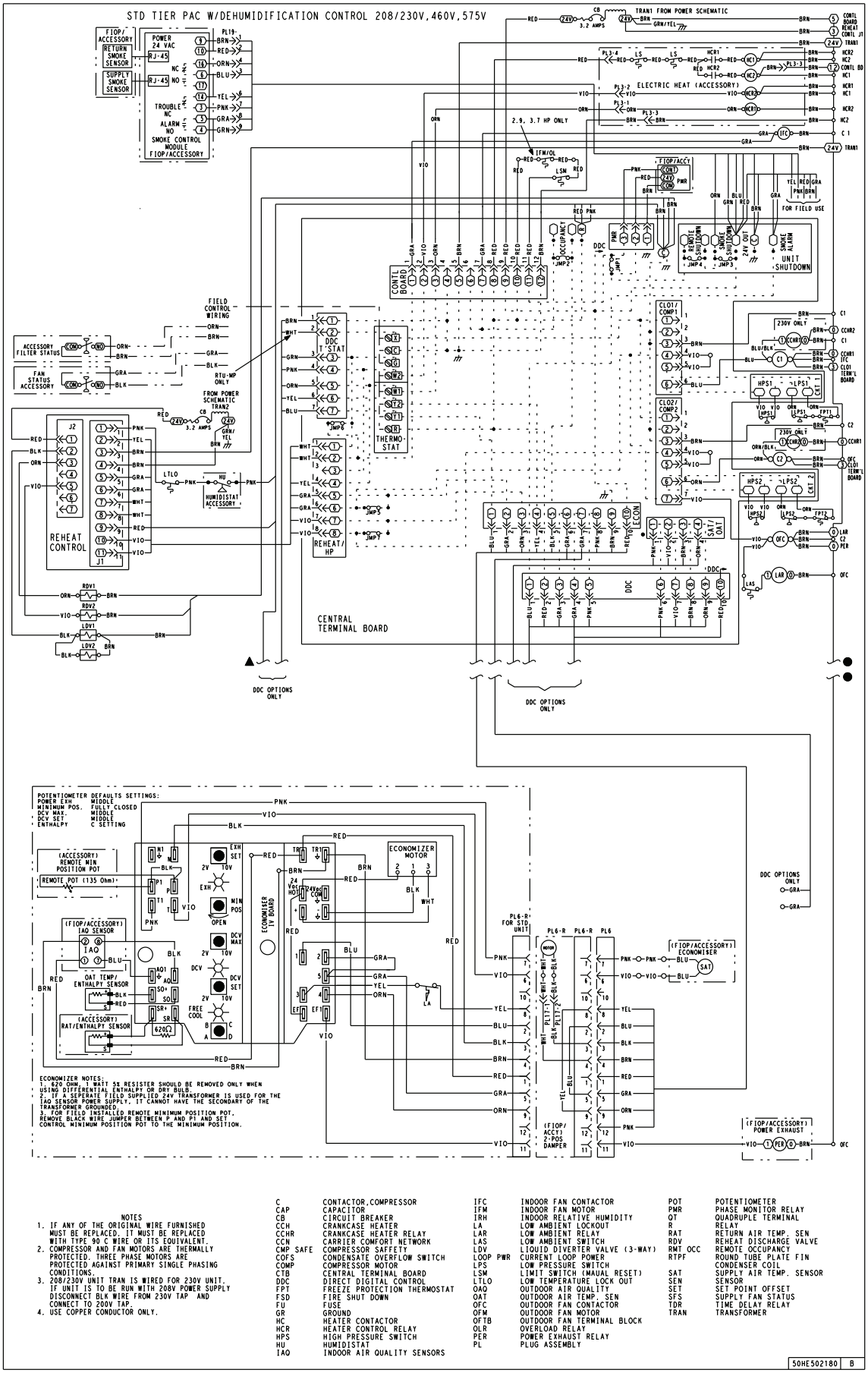

NOTES

1. IF ANY OF THE ORIGINAL WIRE FURNISHED MUST BE REPLACED, IT MUST BE REPLACED WITH TYPE 90 C WIRE OR ITS EQUIVALENT.
2. COMPRESSOR AND FAN MOTORS ARE THERMALLY PROTECTED. THREE PHASE MOTORS ARE PROTECTED AGAINST PRIMARY SINGLE PHASING CONDITIONS.
3. 208/230V UNIT TRAN IS WIRED FOR 230V UNIT. IF UNIT IS TO BE RUN WITH 208V POWER SUPPLY DISCONNECT BLK WIRE FROM 230V TAP AND CONNECT TO 200V TAP.
4. USE COPPER CONDUCTOR ONLY.

C	CONTACTOR,COMPRESSOR	IFC	INDOOR FAN CONTACTOR	POT	POTENTIOMETER
CAP	CAPACITOR	IFM	INDOOR FAN MOTOR	PMR	PHASE MONITOR RELAY
CB	CIRCUIT BREAKER	IRH	INDOOR RELATIVE HUMIDITY	QT	QUADRUPLE TERMINAL
CCH	CRANKCASE HEATER	LA	LOW AMBIENT LOCKOUT	R	RELAY
CCHR	CRANKCASE HEATER RELAY	LAR	LOW AMBIENT RELAY	RAT	RETURN AIR TEMP. SEN
CCN	CARRIER COMFORT NETWORK	LAS	LOW AMBIENT SWITCH	RDV	REHEAT DISCHARGE VALVE
CMP SAFE	COMPRESSOR SAFFETY	LDV	LIQUID DIVERTER VALVE (3-WAY)	RMT OCC	REMOTE OCCUPANCY
COFS	CONDENSATE OVERFLOW SWITCH	LOOP PWR	CURRENT LOOP POWER	RTPF	ROUND TUBE PLATE FIN CONDENSER COIL
COMP	COMPRESSOR MOTOR	LPS	LOW PRESSURE SWITCH	SAT	SUPPLY AIR TEMP. SENSOR
CTB	CENTRAL TERMINAL BOARD	LSM	LIMIT SWITCH (MAUAL RESET)	SEN	SENSOR
DDC	DIRECT DIGITAL CONTROL	LTLO	LOW TEMPERATURE LOCK OUT	SET	SET POINT OFFSET
FPT	FREEZE PROTECTION THERMOSTAT	OAQ	OUTDOOR AIR QUALITY	SFS	SUPPLY FAN STATUS
FSD	FIRE SHUT DOWN	OAT	OUTDOOR AIR TEMP. SEN	TDR	TIME DELAY RELAY
FU	FUSE	OFC	OUTDOOR FAN CONTACTOR	TRAN	TRANSFORMER
GR	GROUND	OFM	OUTDOOR FAN MOTOR		
HC	HEATER CONTACTOR	OFTB	OUTDOOR FAN TERMINAL BLOCK		
HCR	HEATER CONTROL RELAY	OLR	OVERLOAD RELAY		
HPS	HIGH PRESSURE SWITCH	PER	POWER EXHAUST RELAY		
HU	HUMIDISTAT	PL	PLUG ASSEMBLY		
IAQ	INDOOR AIR QUALITY SENSORS				

C11231

Fig. 16 – Typical Control Diagram (All Voltages)

SEQUENCE OF OPERATION

General

The sequence below describes the sequence of operation for an electro-mechanical unit with and without a factory installed EconoMi$er™ IV (called "economizer" in this sequence). For information regarding a direct digital controller, see the start-up, operations, and troubleshooting manual for the applicable controller.

Electro-mechanical units with no economizer

Cooling —

When the thermostat calls for cooling, terminals G and Y1 are energized. As a result, the indoor-fan contactor (IFC) and the compressor contactor (C1) are energized, causing the indoor-an motor (IFM), compressor #1, and outdoor fan to start. If the unit has 2 stages of cooling, the thermostat will additionally energize Y2. The Y2 signal will energize compressor contactor #2 (C2), causing compressor #2 to start. Regardless of the number of stages, the outdoor-fan motor runs continuously while unit is cooling.

Heating —

NOTE: The 50TC is sold as cooling only. If electric heaters are required, use only factory-approved electric heaters. They will operate as described below.

Units have either 1 or 2 stages of electric heat. When the thermostat calls for heating, power is applied to the W1 terminal at the unit. The unit control will energize the indoor fan contactor and the first stage of electric heat. On units with two-stage heating, when additional heating is required, the second stage of electric heat (if equipped) will be energized when power is applied at the W2 terminal on the unit.

Electro-mechanical units with an economizer

Cooling —

When free cooling is not available, the compressors will be controlled by the zone thermostat. When free cooling is available, the outdoor-air damper is modulated by the EconoMi$er IV control to provide a 50°F (10°C) to 55°F (13°C) mixed-air temperature into the zone. As the mixed air temperature fluctuates above 55°F (13°C) or below 50°F (10°C) dampers will be modulated (open or close) to bring the mixed-air temperature back within control. If mechanical cooling is utilized with free cooling, the outdoor-air damper will maintain its current position at the time the compressor is started. If the increase in cooling capacity causes the mixed-air temperature to drop below 45°F (9°C), then the outdoor-air damper position will be decreased to the minimum position. If the mixed-air temperature continues to fall, the outdoor-air damper will close. Control returns to normal once the mixed-air temperature rises above 48°F (9°C). The power exhaust fans will be energized and de-energized, if installed, as the outdoor-air damper opens and closes.

If field-installed accessory CO_2 sensors are connected to the EconoMi$er IV control, a demand controlled ventilation strategy will begin to operate. As the CO_2 level in the zone increases above the CO_2 setpoint, the minimum position of the damper will be increased proportionally. As the CO_2 level decreases because of the increase in fresh air, the outdoor-air damper will be proportionally closed. For EconoMi$er IV operation, there must be a thermostat call for the fan (G). If the unit is occupied and the fan is on, the damper will operate at minimum position. Otherwise, the damper will be closed.

When the EconoMi$er IV control is in the occupied mode and a call for cooling exists (Y1 on the thermostat), the control will first check for indoor fan operation. If the fan is not on, then cooling will not be activated. If the fan is on, then the control will open the EconoMi$er IV damper to the minimum position.

On the initial power to the EconoMi$er IV control, it will take the damper up to 2 1/2 minutes before it begins to position itself. After the initial power-up, further changes in damper position can take up to 30 seconds to initiate. Damper movement from full closed to full open (or vice versa) will take between 1 1/2 and 2 1/2 minutes. If free cooling can be used as determined from the appropriate changeover command (switch, dry bulb, enthalpy curve, differential dry bulb, or differential enthalpy), then the control will modulate the dampers open to maintain the mixed-air temperature setpoint at 50°F (10°C) to 55°F (13°C). If there is a further demand for cooling (cooling second stage - Y2 is energized), then the control will bring on compressor stage 1 to maintain the mixed-air temperature setpoint. The EconoMi$er IV damper will be open at maximum position. EconoMi$er IV operation is limited to a single compressor.

Heating —

The sequence of operation for the heating is the same as an electromechanical unit with no economizer. The only difference is how the economizer acts. The economizer will stay at the Economizer Minimum Position while the evaporator fan is operating. The outdoor-air damper is closed when the indoor fan is not operating.

Refer to Service and Maintenance Manual for further details.

Optional Humidi-MiZer Dehumidification System

Units with the factory-equipped Humidi-MiZer option are capable of providing multiple modes of improved dehumidification as a variation of the normal cooling cycle. The Humidi-MiZer option includes additional valves in the liquid line and discharge line of each refrigerant circuit, a small reheat condenser coil downstream of the evaporator, and Motormaster variable-speed control of some or all outdoor fans. Operation of the revised refrigerant circuit for each mode is described below.

NOTE: x = refrigerant circuit A, B, or C.

Normal Cooling

Refrigerant flows from the outdoor condenser through the normally open Cooling Valve (CV.x) to the expansion device. Reheat1 Valve (RH1.x) and Reheat2 Valve (RH2.x) are closed.

Reheat1 (Subcooling Mode) - 50TC17-28

This mode increases latent cooling and decreases sensible cooling compared to normal cooling. Refrigerant flows from the outdoor condenser, through the normally open Reheat1 Valve (RH1.x), and through the reheat condenser coil to the expansion device. Cooling Valve (CV.x) and Reheat2 Valve (RH2.x) are closed.

Reheat2 (Hot Gas Reheat Mode) -50TC17-28

This mode provides maximum latent cooling with little to no sensible capacity. This mode can operate to provide dehumidification when there is no cooling demand. Like Reheat1 mode, refrigerant flows from the outdoor condenser, through the normally open Reheat1 Valve (RH1.x), and through the reheat condenser coil to the expansion device. The Cooling Valve (CV.x) is closed. Reheat2 Valve (RH2.x) is open which provides some compressor discharge gas to the reheat condenser to further increase the reheat of the evaporator airstream.

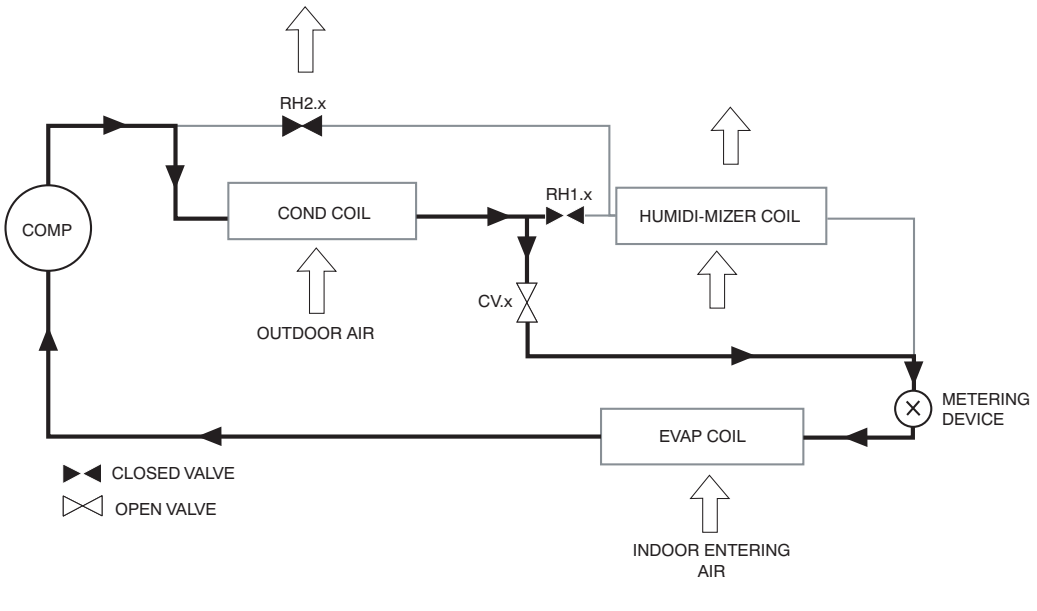

Normal Cooling Mode - Humidi-MiZer System (50TC17-28)

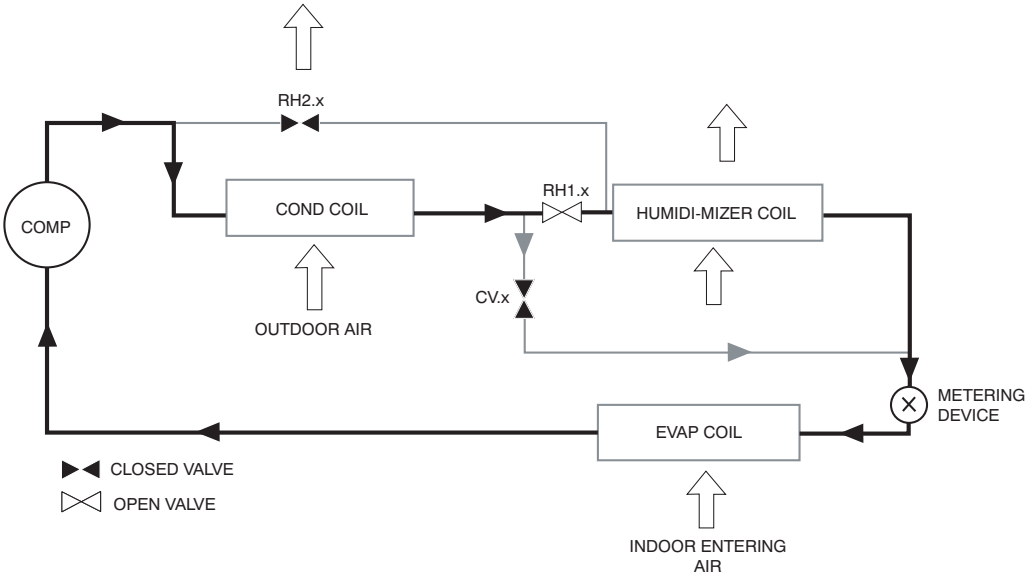

C07120

Subcooling Mode (Reheat 1) - Humidi-MiZer System (50TC17-28)

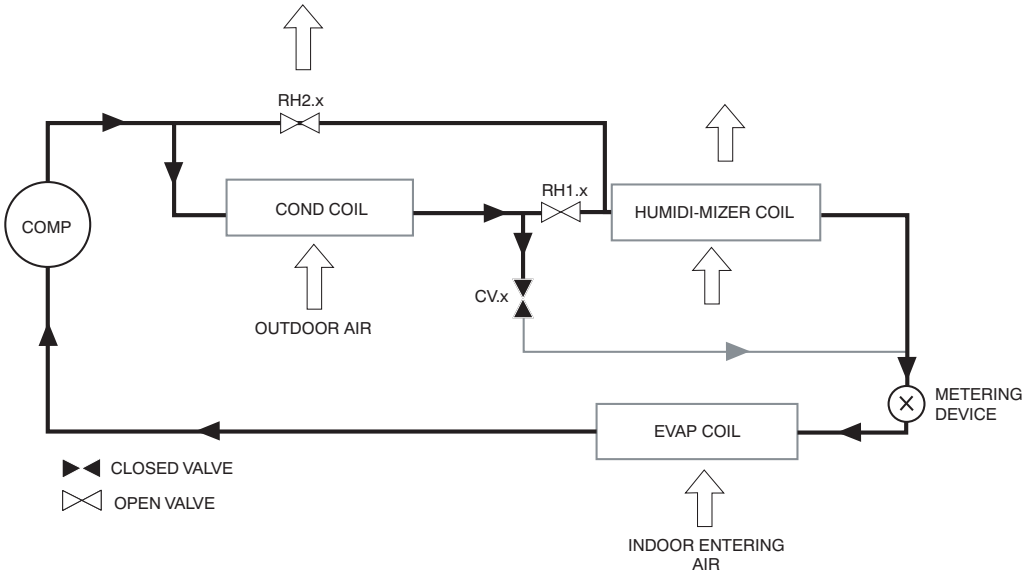

C07121

Hot Gas Reheat Mode (Reheat2) - Humidi-MiZer System (50TC17-28)

GUIDE SPECIFICATIONS - 50TC-D17-30

Note about this specification:

These specifications are written in “Masterformat” as published by the Construction Specification Institute. Please feel free to copy this specification directly into your building spec.

Cooling Only/Electric Heat Packaged Rooftop

HVAC Guide Specifications

Size Range: **15 to 27.5 Nominal Tons**

Section **Description**

23 06 80 Schedules for Decentralized HVAC Equipment

23 06 80.13 Decentralized Unitary HVAC Equipment Schedule

23 06 80.13.A. Rooftop unit schedule

1. Schedule is per the project specification requirements.

23 07 16 HVAC Equipment Insulation

23 07 16.13 Decentralized, Rooftop Units:

23 07 16.13.A. Evaporator fan compartment:

1. Interior cabinet surfaces shall be insulated with a minimum 1/2-in. thick, minimum 1 1/2 lb density, flexible fiberglass insulation bonded with a phenolic binder, neoprene coated on the air side.
2. Insulation and adhesive shall meet NFPA 90A requirements for flame spread and smoke generation.

23 07 16.13.B. Electric heat compartment:

1. Aluminum foil-faced fiberglass insulation shall be used.
2. Insulation and adhesive shall meet NFPA 90A requirements for flame spread and smoke generation.

23 09 13 Instrumentation and Control Devices for HVAC

23 09 13.23 Sensors and Transmitters

23 09 13.23.A. Thermostats

1. Thermostat must
   a. energize both “W” and “G” when calling for heat.
   b. have capability to energize 2 different stages of cooling, and 2 different stages of heating.
   c. include capability for occupancy scheduling.

23 09 23 Direct-digital Control system for HVAC

23 09 23.13 Decentralized, Rooftop Units:

23 09 23.13.A. PremierLink controller

1. Shall be ASHRAE 62-2001 compliant.
2. Shall accept 18-32VAC input power.
3. Shall have an operating temperature range from -40°F (-40°C) to 158°F (70°C), 10% - 95% RH (non-condensing).
4. Shall include an integrated economizer controller to support an economizer with 4 to 20 mA actuator input and no microprocessor controller.
5. Controller shall accept the following inputs: space temperature, setpoint adjustment, outdoor air temperature, indoor air quality, outdoor air quality, indoor relative humidity, compressor lock-out, fire shutdown, enthalpy, fan status, remote time clock/door switch.
6. Shall accept a CO_2 sensor in the conditioned space, and be Demand Control Ventilation (DCV) ready.
7. Shall provide the following outputs: Economizer, fan, cooling stage 1, cooling stage 2, heat stage 1, heat stage 2, heat stage 3/ exhaust/ reversing valve/ dehumidify/ occupied.
8. Unit shall provide surge protection for the controller through a circuit breaker.
9. Shall be Internet capable, and communicate at a Baud rate of 38.4K or faster
10. Shall have an LED display independently showing the status of activity on the communication bus, and processor operation.
11. Shall include an EIA-485 protocol communication port, an access port for connection of either a computer or a Carrier technician tool, an EIA-485 port for network communication to intelligent space sensors and displays, and a port to connect an optional LonWorks plug-in communications card.

12. Shall have built-in Carrier Comfort Network (CCN) protocol, and be compatible with other CCN devices, including ComfortVIEW controllers.
13. Shall have built-in support for Carrier technician tool.
14. Software upgrades will be accomplished by local download. Software upgrades through chip replacements are not allowed.
15. Shall be shock resistant in all planes to 5G peak, 11ms during operation, and 100G peak, 11ms during storage.
16. Shall be vibration resistant in all planes to 1.5G @ 20-300 Hz.
17. Shall support a bus length of 4000 ft max, 60 devices per 1000 ft section, and 1 RS-485 repeater per 1000ft sections.

23 09 23.13.B. RTU-Open protocol, direct digital controller:

1. Shall be ASHRAE 62-2001 compliant.
2. Shall accept 18-30VAC, 50-60Hz, and consumer 15VA or less power.
3. Shall have an operating temperature range from -40°F (-40°C) to 130°F (54°C), 10% - 90% RH (non-condensing).
4. Shall include built-in protocol for BACNET (MS/TP and PTP modes), Modbus (RTU and ASCII), Johnson N2 and LonWorks. LonWorks Echelon processor required for all Lon applications shall be contained in separate communication board.
5. Shall allow access of up to 62 network variables (SNVT). Shall be compatible with all open controllers
6. Baud rate Controller shall be selectable using a dipswitch.
7. Shall have an LED display independently showing the status of serial communication, running, errors, power, all digital outputs, and all analog inputs.
8. Shall accept the following inputs: space temperature, setpoint adjustment, outdoor air temperature, indoor air quality, outdoor air quality, compressor lock-out, fire shutdown, enthalpy switch, and fan status/filter status/ humidity/ remote occupancy.
9. Shall provide the following outputs: economizer, fan, cooling stage 1, cooling stage 2, heat stage 1, heat stage 2, heat stage 3/ exhaust/ reversing valve.
10. Shall have built-in surge protection circuitry through solid state polyswitches. Polyswitches shall be used on incoming power and network connections. Polyswitches will return to normal when the “trip” condition clears.
11. Shall have a battery back-up capable of a minimum of 10,000 hours of data and time clock retention during power outages.
12. Shall have built-in support for Carrier technician tool.
13. Shall include an EIA-485 protocol communication port, an access port for connection of either a computer or a Carrier technician tool, an EIA-485 port for network communication to intelligent space sensors and displays, and a port to connect an optional LonWorks communications card.
14. Software upgrades will be accomplished by either local or remote download. No software upgrades through chip replacements are allowed.

23 09 33 Electric and Electronic Control System for HVAC

23 09 33.13 Decentralized, Rooftop Units:

23 09 33.13.A. General:

1. Shall be complete with self-contained low-voltage control circuit protected by a resettable circuit breaker on the 24-v transformer side. Transformer shall have 75VA capability.
2. Shall utilize color-coded wiring.
3. Shall include a central control terminal board to conveniently and safely provide connection points for vital control functions such as: smoke detectors, phase monitor, economizer, thermostat, DDC control options, and low and high pressure switches.
4. Unit shall include a minimum of one 8-pin screw terminal connection board for connection of control wiring.

23 09 33.23.B. Safeties:

1. Compressor over-temperature, over current.
2. Low-pressure switch.
   a. Units shall have different sized connectors for the circuit 1 and circuit 2 low and high pressure switches. They shall physically prevent the cross-wiring of the safety switches between circuits 1 and 2.
   b. Low pressure switch shall use different color wire than the high pressure switch. The purpose is to assist the installer and service technician to correctly wire and or troubleshoot the rooftop unit.
3. High-pressure switch.
   a. Units compressors shall have different sized connectors for the circuit 1 and circuit 2 low and high pressure switches. They shall physically prevent the cross-wiring of the safety switches between circuits 1 and 2.

b. High pressure switch shall use different color wire than the low pressure switch. The purpose is to assist the installer and service technician to correctly wire and or troubleshoot the rooftop unit.

4. Automatic reset, motor thermal overload protector.

23 09 93 Sequence of Operations for HVAC Controls

23 09 93.13 Decentralized, Rooftop Units:

23 09 93.13 INSERT SEQUENCE OF OPERATION

23 40 13 Panel Air Filters

23 40 13.13 Decentralized, Rooftop Units:

23 40 13.13.A. Standard filter section

1. Shall consist of factory-installed, low velocity, throwaway 2-in. thick fiberglass filters of commercially available sizes.
2. Unit shall use only one filter size. Multiple sizes are not acceptable.
3. Filters shall be accessible through a dedicated, weather tight panel.
4. 4-in filter capabilities shall be capable with pre engineered and approved Carrier filter track field installed accessory. This kit requires field furnished filters.

23 81 19 Self-Contained Air Conditioners

23 81 19.13 Medium-Capacity Self-Contained Air Conditioners (50TC*D17-30)

23 81 19.13.A. General

1. Outdoor, rooftop mounted, electrically controlled, heating and cooling unit utilizing a(n) hermetic scroll compressor(s) for cooling duty and gas combustion for heating duty.
2. Factory assembled, single-piece heating and cooling rooftop unit. Contained within the unit enclosure shall be all factory wiring, piping, controls, and special features required prior to field start-up.
3. Unit shall use environmentally safe, Puron refrigerant.
4. Unit shall be installed in accordance with the manufacturer's instructions.
5. Unit must be selected and installed in compliance with local, state, and federal codes.

23 81 19.13.B. Quality Assurance

1. Unit meets ASHRAE 90.1 minimum efficiency requirements.
2. 3 phase units are Energy Star qualified where sizes are required.
3. Unit shall be rated in accordance with AHRI Standard 340/360.
4. Unit shall be designed to conform to ASHRAE 15.
5. Unit shall be ETL-tested and certified in accordance with ANSI Z21.47 Standards and ETL-listed and certified under Canadian standards as a total package for safety requirements.
6. Insulation and adhesive shall meet NFPA 90A requirements for flame spread and smoke generation.
7. Unit casing shall be capable of withstanding 500-hour salt spray exposure per ASTM B117 (scribed specimen).
8. Unit casing shall be capable of withstanding Federal Test Method Standard No. 141 (Method 6061) 5000-hour salt spray.
9. Unit shall be designed and manufactured in accordance with ISO 9001.
10. Roof curb shall be designed to conform to NRCA Standards.
11. Unit shall be subjected to a completely automated run test on the assembly line. The data for each unit will be stored at the factory, and must be available upon request.
12. Unit shall be designed in accordance with ETL Standard 1995, including tested to withstand rain.
13. Unit shall be constructed to prevent intrusion of snow and tested to prevent snow intrusion into the control box up to 40 mph.
14. Unit shake tested to assurance level 1, ASTM D4169 to ensure shipping reliability.
15. High Efficient Motors listed shall meet section 313 of the Energy Independence and Security Act of 2007 (EISA 2007).

23 81 19.13.C. Delivery, Storage, and Handling

1. Unit shall be stored and handled per manufacturer's recommendations.
2. Lifted by crane requires either shipping top panel or spreader bars.
3. Unit shall only be stored or positioned in the upright position.

23 81 19.13.D. Project Conditions

1. As specified in the contract.

23 81 19.13.E. Project Conditions

1. As specified in the contract.

23 81 19.13.F. Operating Characteristics

1. Unit shall be capable of starting and running at 115°F (46°C) ambient outdoor temperature, meeting maximum load criteria of AHRI Standard 340/360 at ± 10% voltage.
2. Compressor with standard controls shall be capable of operation from 30°F (-1°C) , ambient outdoor temperatures. Accessory kits are necessary if mechanically cooling at ambient temperatures below 30°F (-1°C).
3. Unit shall discharge supply air vertically or horizontally as shown on contract drawings.
4. Unit shall be factory configured and ordered for vertical supply & return configurations.
5. Unit shall be factory furnished for either vertical or horizontal configuration without the use of special conversion kits. No field kits conversion is possible.
6. Unit shall be capable of mixed operation: vertical supply with horizontal return or horizontal supply with vertical return.

23 81 19.13.G. Electrical Requirements

1. Main power supply voltage, phase, and frequency must match those required by the manufacturer.

23 81 19.13.H. Unit Cabinet

1. Unit cabinet shall be constructed of galvanized steel, and shall be bonderized and coated with a pre-painted baked enamel finish on all externally exposed surfaces.
2. Unit cabinet exterior paint shall be: film thickness, (dry) 0.003 inches minimum, gloss (per ASTM D523, 60°F): 60, Hardness: H-2H Pencil hardness.
3. Evaporator fan compartment interior cabinet insulation shall conform to AHRI Standards 340/360 minimum exterior sweat criteria. Interior surfaces shall be insulated with a minimum 1/2-in. thick, 1 lb density, flexible fiberglass insulation, neoprene coated on the air side. Aluminum foil-faced fiberglass insulation shall be used in the heat compartment.
4. Base of unit shall have a minimum of four locations for factory thru-the-base electrical connections. Connections shall be internal to the cabinet to protect from environmental issues.
5. Base Rail
   a. Unit shall have base rails on a minimum of 2 sides.
   b. Holes shall be provided in the base rails for rigging shackles to facilitate maneuvering and overhead rigging.
   c. Holes shall be provided in the base rail for moving the rooftop by fork truck.
   d. Base rail shall be a minimum of 16 gauge thickness.
6. Condensate pan and connections:
   a. Shall be a sloped condensate drain pan made of a non-corrosive material.
   b. Shall comply with ASHRAE Standard 62.
   c. Shall use a 3/4-in -14 NPT drain connection at the end of the drain pan. Connection shall be made per manufacturer's recommendations.
7. Top panel:
   a. Shall be a multi-piece top panel linked with water tight flanges and interlocking systems.
8. Electrical Connections
   a. All unit power wiring shall enter unit cabinet at a single, factory-prepared, knockout location.
   b. Thru-the-base capability
      (1.) Standard unit shall have a thru-the-base electrical location(s) using a raised, embossed portion of the unit basepan.
      (2.) Optional, factory-approved, water-tight connection method must be used for thru-the-base electrical connections.
      (3.) No basepan penetration, other than those authorized by the manufacturer, is permitted.
9. Component access panels (standard)
   a. Cabinet panels shall be easily removable for servicing.
   b. Unit shall have one factory installed, tool-less, removable, filter access panel.
   c. Panels covering control box and filters shall have molded composite handles while the blower access door shall have an integrated flange for easy removal.
   d. Handles shall be UV modified, composite. permanently attached, and recessed into the panel.
   e. Screws on the vertical portion of all removable access panel shall engage into heat resistant, molded composite collars.

f. Collars shall be removable and easily replaceable using manufacturer recommended parts.

23 81 19.13.I. N/A

23 81 19.13.J. Coils

1. Standard Aluminum fin - Copper Tube Coils:
   a. Standard evaporator and condenser coils shall have aluminum lanced plate fins mechanically bonded to seamless internally grooved copper tubes with all joints brazed.
   b. Evaporator coils shall be leak tested to 150 psig, pressure tested to 450 psig, and qualified to UL 1995 burst test at 1775 psig.
   c. Condenser coils shall be leak tested to 150 psig, pressure tested to 650 psig, and qualified to UL 1995 burst test at 1980 psig.
2. Optional Pre-coated aluminum-fin condenser coils:
   a. Shall have a durable epoxy-phenolic coating to provide protection in mildly corrosive coastal environments.
   b. Coating shall be applied to the aluminum fin stock prior to the fin stamping process to create an inert barrier between the aluminum fin and copper tube.
   c. Epoxy-phenolic barrier shall minimize galvanic action between dissimilar metals.
3. Optional Copper-fin evaporator and condenser coils:
   a. Shall be constructed of copper fins mechanically bonded to copper tubes and copper tube sheets.
   b. Galvanized steel tube sheets shall not be acceptable.
   c. A polymer strip shall prevent coil assembly from contacting the sheet metal coil pan to minimize potential for galvanic corrosion between coil and pan.
4. Optional E-coated aluminum-fin evaporator and condenser coils:
   a. Shall have a flexible epoxy polymer coating uniformly applied to all coil surface areas without material bridging between fins.
   b. Coating process shall ensure complete coil encapsulation of tubes, fins and headers.
   c. Color shall be high gloss black with gloss per ASTM D523-89.
   d. Uniform dry film thickness from 0.8 to 1.2 mil on all surface areas including fin edges.
   e. Superior hardness characteristics of 2H per ASTM D3363-92A and cross-hatch adhesion of 4B-5B per ASTM D3359-93.
   f. Impact resistance shall be up to 160 in.-lb (ASTM D2794-93).
   g. Humidity and water immersion resistance shall be up to minimum 1000 and 250 hours respectively (ASTM D2247-92 and ASTM D870-92).
   h. Corrosion durability shall be confirmed through testing to be no less than 1000 hours salt spray per ASTM B117-90.
5. Standard All Aluminum Novation Coils:
   a. Standard condenser coils shall have all aluminum Novation Heat Exchanger Technology design consisting of aluminum multi port flat tube design and aluminum fin. Coils shall be a furnace brazed design and contain epoxy lined shrink wrap on all aluminum to copper connections.
   b. Condenser coils shall be leak tested to 150 psig, pressure tested to 650 psig, and qualified to UL 1995 burst test at 1980 psig.
6. Optional E-coated aluminum-fin, aluminum tube condenser coils:
   a. Shall have a flexible epoxy polymer coating uniformly applied to all coil external surface areas without material bridging between fins or louvers.
   b. Coating process shall ensure complete coil encapsulation, including all exposed fin edges.
   c. E-coat thickness of 0.8 to 1.2 mil with top coat having a uniform dry film thickness from 1.0 to 2.0 mil on all external coil surface areas, including fin edges, shall be provided.
   d. Shall have superior hardness characteristics of 2H per ASTM D3363-00 and cross-hatch adhesion of 4B-5B per ASTM D3359-02.
   e. Shall have superior impact resistance with no cracking, chipping or peeling per NSF/ANSI 51-2002 Method 10.2.

23 81 19.13.K. Refrigerant Components

1. Refrigerant circuit shall include the following control, safety, and maintenance features:
   a. Fixed orifice metering system shall prevent mal-distribution of two-phase refrigerant by including multiple fixed orifice devices in each refrigeration circuit. Each orifice is to be optimized to the coil circuit it serves.
   b. Refrigerant filter drier.
   c. Service gauge connections on suction and discharge lines.

d. Pressure gauge access through a specially designed screen on the side of the unit.

2. Compressors

a. Unit shall use one fully hermetic, scroll compressor for each independent refrigeration circuit.

b. Models shall be available with 2 compressor/2 stage cooling.

c. Compressor motors shall be cooled by refrigerant gas passing through motor windings.

d. Compressors shall be internally protected from high discharge temperature conditions.

e. Compressors shall be protected from an over-temperature and over-amperage conditions by an internal, motor overload device.

f. Compressor shall be factory mounted on rubber grommets.

g. Compressor motors shall have internal line break thermal, current overload and high pressure differential protection.

h. Crankcase heaters shall not be required for normal operating range, unless provided by the factory.

23 81 19.13.L. Filter Section

1. Filters access is specified in the unit cabinet section of this specification.
2. Filters shall be held in place by a preformed slide out filter tray, facilitating easy removal and installation.
3. Shall consist of factory-installed, low velocity, throw-away 2-in. thick fiberglass filters.
4. Filters shall be standard, commercially available sizes.
5. Only one size filter per unit is allowed.
6. 4-in filter capability is possible with a field installed pre engineered slide out filter track accessory. 4-in filters are field furnished.

23 81 19.13.M. Evaporator Fan and Motor

1. Evaporator fan motor:

a. Shall have inherent automatic-reset thermal overload protection or circuit breaker.

b. Shall have a maximum continuous bhp rating for continuous duty operation; no safety factors above that rating shall be required.

2. Belt-driven Evaporator Fan:

a. Belt drive shall include an adjustable-pitch motor pulley and belt break protection system..

b. Shall use rigid pillow block bearing system with lubricate fittings at are accessible or lubrication line.

c. Blower fan shall be double-inlet type with forward-curved blades.

d. Shall be constructed from steel with a corrosion resistant finish and dynamically balanced.

e. Standard on all 17-28 size models with Humidi-MiZer (round tube plate fin only).

23 81 19.13.N. Condenser Fans and Motors

1. Condenser fan motors:

a. Shall be a totally enclosed motor.

b. Shall use permanently lubricated bearings.

c. Shall have inherent thermal overload protection with an automatic reset feature.

d. Shall use a shaft-down design.

2. Condenser Fans:

a. Shall be a direct-driven propeller type fan.

b. Shall have aluminum blades riveted to corrosion-resistant steel spiders and shall be dynamically balanced.

23 81 19.13.O. Special Features, Options and Accessories

1. Integrated Economizers:

a. Integrated, gear-driven opposing blade design type capable of simultaneous economizer and compressor operation.

b. Independent modules for vertical or horizontal return configurations shall be available. Vertical and horizontal return modules shall be available as a factory installed option.

c. Damper blades shall be galvanized steel with composite gears. Plastic or composite blades on intake or return shall not be acceptable.

d. Shall include all hardware and controls to provide free cooling with outdoor air when temperature and/or humidity are below setpoints.

e. Shall be equipped with gear driven dampers for both the outdoor ventilation air and the return air for positive air stream control.

f. Shall be equipped with low-leakage dampers, not to exceed 2% leakage at 1 in. wg pressure differential.

g. Shall be capable of introducing up to 100% outdoor air.

h. Shall be equipped with a barometric relief damper capable of relieving up to 100% return air.

i. Shall be designed to close damper(s) during loss-of-power situations with spring return built into motor.

j. Dry bulb outdoor-air temperature sensor shall be provided as standard. Outdoor air sensor setpoint shall be adjustable and shall range from 40 to 100°F / 4 to 38°C. Additional sensor options shall be available as accessories.

k. The economizer controller shall also provide control of an accessory power exhaust unit. function. Factory set at 100%, with a range of 0% to 100%.

l. The economizer shall maintain minimum airflow into the building during occupied period and provide design ventilation rate for full occupancy. A remote potentiometer may be used to override the damper setpoint.

m. Dampers shall be completely closed when the unit is in the unoccupied mode.

n. Economizer controller shall accept a 2-10Vdc CO_2 sensor input for IAQ/DCV control. In this mode, dampers shall modulate the outdoor-air damper to provide ventilation based on the sensor input.

o. Compressor lockout sensor shall open at 35°F (2°C) and close closes at 50°F (10°C).

p. Actuator shall be direct coupled to economizer gear. No linkage arms or control rods shall be acceptable.

q. Economizer controller shall provide indications when in free cooling mode, in the DCV mode, or the exhaust fan contact is closed.

2. Two-Position Motorized Damper

a. Damper shall be a Two-Position Damper. Damper travel shall be from the full closed position to the field adjustable %-open setpoint.

b. Damper shall include adjustable damper travel from 25% to 100% (full open).

c. Damper shall include single or dual blade, gear driven dampers and actuator motor.

d. Actuator shall be direct coupled to damper gear. No linkage arms or control rods shall be acceptable.

e. Damper will admit up to 100% outdoor air for applicable rooftop units.

f. Damper shall close upon indoor (evaporator) fan shutoff and/or loss of power.

g. The damper actuator shall plug into the rooftop unit's wiring harness plug. No hard wiring shall be required.

h. Outside air hood shall include aluminum water entrainment filter

3. Manual damper

a. Manual damper package shall consist of damper, air inlet screen, and rain hood which can be preset to admit up to 25% outdoor air for year round ventilation.

4. Humidi-MiZer Adaptive Dehumidification System (17-28 sizes only):

a. The Humidi-MiZer Adaptive Dehumidification System shall be factory-installed in two stage 50TC17-28 models with RTPF (round tube plate fin) condenser coils, and shall provide greater dehumidification of the occupied space by two modes of dehumidification operations beside its normal design cooling mode:

(1.) Subcooling mode further subcools the hot liquid refrigerant leaving the condenser coil when both temperature and humidity in the space are not satisfied.

(2.) Hot gas reheat mode shall mix a portion of the hot gas from the discharge of the compressor with the hot liquid refrigerant leaving the condenser coil to create a two-phase heat transfer in the system, resulting in a neutral leaving- air temperature when only humidity in the space is not satisfied.

(3.) Includes Head Pressure Controller.

5. Head Pressure Control Package

a. Controller shall control coil head pressure by condenser-fan speed modulation or condenser-fan cycling and wind baffles.

b. Shall consist of solid-state control and condenser-coil temperature sensor to maintain condensing temperature between 90°F (32°C) and 110°F (43°C) at outdoor ambient temperatures down to -20°F (-29°C).

6. Condenser Coil Hail Guard Assembly

a. Shall protect against damage from hail.

b. Shall be louvered style design.

7. Unit-Mounted, Non-Fused Disconnect Switch:

a. Switch shall be factory-installed, internally mounted.

b. National Electric Code (NEC) and ETL approved non-fused switch shall provide unit power shutoff.

c. Shall be accessible from outside the unit

d. Shall provide local shutdown and lockout capability.

8. Convenience Outlet:

a. Powered convenience outlet.

(1.) Outlet shall be powered from main line power to the rooftop unit.

(2.) Outlet shall be powered from line side of disconnect by installing contractor, as required by code. If outlet is powered from load side of disconnect, unit electrical ratings shall be ETL certified and rated for additional outlet amperage.

(3.) Outlet shall be factory-installed and internally mounted with easily accessible 115-v female receptacle.

(4.) Outlet shall include 15 amp GFI receptacles with independent fuse protection.

(5.) Voltage required to operate convenience outlet shall be provided by a factory-installed step-down transformer.

(6.) Outlet shall be accessible from outside the unit.

(7.) Outlet shall include a field-installed "Wet in Use" cover.

b. Non-Powered convenience outlet.

(1.) Outlet shall be powered from a separate 115/120v power source.

(2.) A transformer shall not be included.

(3.) Outlet shall be factory-installed and internally mounted with easily accessible 115-v female receptacle.

(4.) Outlet shall include 15 amp GFI receptacles with independent fuse protection.

(5.) Outlet shall be accessible from outside the unit.

(6.) Outlet shall include a field-installed "Wet in Use" cover.

9. Thru-the-Base Connectors:
   a. Kits shall provide connectors to permit electrical connections to be brought to the unit through the unit basepan.
   b. Minimum of four connection locations per unit.
10. Fan/Filter Status Switch:
   a. Switch shall provide status of indoor evaporator fan (ON/OFF) or filter (CLEAN/DIRTY).
   b. Status shall be displayed either over communication bus (when used with direct digital controls) or with an indicator light at the thermostat.
11. Centrifugal Power Exhaust:
   a. Power exhaust shall be used in conjunction with an integrated economizer.
   b. Independent modules for vertical or horizontal return configurations shall be available.
   c. Horizontal power exhaust is shall be mounted in return ductwork.
   d. Power exhaust shall be controlled by economizer controller operation. Exhaust fans shall be energized when dampers open past the 0-100% adjustable setpoint on the economizer control.
12. Roof Curbs (Vertical):
   a. Full perimeter roof curb with exhaust capability providing separate air streams for energy recovery from the exhaust air without supply air contamination.
   b. Formed galvanized steel with wood nailer strip and shall be capable of supporting entire unit weight.
   c. Permits installation and securing of ductwork to curb prior to mounting unit on the curb.
13. Adapter Curb (Vertical):
   a. Full perimeter, fully assembled and welded roof curb with exhaust capability providing separate air streams for energy recovery from the exhaust air without supply air contamination.
   b. Formed galvanized steel with wood nailer strip and shall be capable of supporting entire unit weight.
   c. Permits installation of new 50TC17-28 models to past Carrier design curb models: DP,DR,HJ,TM, and TJ. Check with Carrier sales expert of further details and information.
14. High-Static Indoor Fan Motor(s) and Drive(s):
   a. High-static motor(s) and drive(s) shall be factory-installed to provide additional performance range.
15. Thru-the-Bottom Utility Connectors:
   a. Kit shall provide connectors to permit gas and electrical connections to be brought to the unit through the basepan.
16. Outdoor Air Enthalpy Sensor:
   a. The outdoor air enthalpy sensor shall be used to provide single enthalpy control. When used in conjunction with a return air enthalpy sensor, the unit will provide differential enthalpy control. The sensor allows the unit to determine if outside air is suitable for free cooling.
17. Return Air Enthalpy Sensor:
   a. The return air enthalpy sensor shall be used in conjunction with an outdoor air enthalpy sensor to provide differential enthalpy control.
18. Indoor Air Quality (CO_2) Sensor:
   a. Shall be able to provide demand ventilation indoor air quality (IAQ) control.

b. The IAQ sensor shall be available in duct mount, wall mount, or wall mount with LED display. The setpoint shall have adjustment capability.

19. Smoke detectors:
    a. Shall be a Four-Wire Controller and Detector.
    b. Shall be environmental compensated with differential sensing for reliable, stable, and drift-free sensitivity.
    c. Shall use magnet-activated test/reset sensor switches.
    d. Shall have tool-less connection terminal access.
    e. Shall have a recessed momentary switch for testing and resetting the detector.
    f. Controller shall include:
        (1.) One set of normally open alarm initiation contacts for connection to an initiating device circuit on a fire alarm control panel.
        (2.) Two Form-C auxiliary alarm relays for interface with rooftop unit or other equipment.
        (3.) One Form-C supervision (trouble) relay to control the operation of the Trouble LED on a remote test/reset station.
        (4.) Capable of direct connection to two individual detector modules.
        (5.) Can be wired to up to 14 other duct smoke detectors for multiple fan shutdown applications.
20. Winter start kit
    a. Shall contain a bypass device around the low pressure switch.
    b. Shall be required when mechanical cooling is required down to 25°F (-4°C).
    c. Shall not be required to operate on an economizer when below an outdoor ambient of 40°F (4°C).
21. Time Guard
    a. Shall prevent compressor short cycling by providing a 5-minute delay (±2 minutes) before restarting a compressor after shutdown for any reason.
    b. One device shall be required per compressor.
22. Electric Heat:
    a. Heating Section
        (1.) Heater element open coil resistance wire, nickel-chrome alloy, 0.29 inches inside diameter, strung through ceramic insulators mounted on metal frame. Coil ends are staked and welded to terminal screw slots.
        (2.) Heater assemblies are provided with integral fusing for protection of internal heater circuits not exceeding 48 amps each. Auto reset thermo limit controls, magnetic heater contactors (24 v coil) and terminal block all mounted in electric heater control box (minimum 18 ga galvanized steel) attached to end of heater assembly.
23. Barometric Hood (Horizontal Economizer Applications)
    a. Shall be required when a horizontal economizer and barometric relief are required. Barometric relief damper must be installed in the return air (horizontal) duct work. This hood provides weather protection.
24. California OSHPD Seismic Certification Label (17-28 sizes only)
    a. Units meet the seismic capacity requirements of the International Code Council Evaluation Service (ICC-ES) document AC156 (Acceptance Criteria for Seismic Qualification by Shake-Table Testing of Nonstructural Components and Systems) and per International Building Code (IBC 2009) at an SDS (g) value of 2.00 z/h=1.0, Ip=1.5 and certified by independent structural engineers.
    b. Units shall include a certification label that meets the CA OSHPD Special Seismic Certification pre-approval labeling requirements on the external chassis of the unit.

Copyright 2011 Carrier Corp. • 7310 W. Morris St. • Indianapolis, IN 46231 Printed in U.S.A. Edition Date: 6/11 **Catalog No: 50TC–15PD**

Manufacturer reserves the right to change, at any time, specifications and designs without notice and without obligations. Replaces: 50TC–13PD