58CVA/58CVX
Variable-Speed, 4-Way
Multipoise Gas Furnace

Installation, Start-up, Operating, and Service and Maintenance Instructions
-Series 120

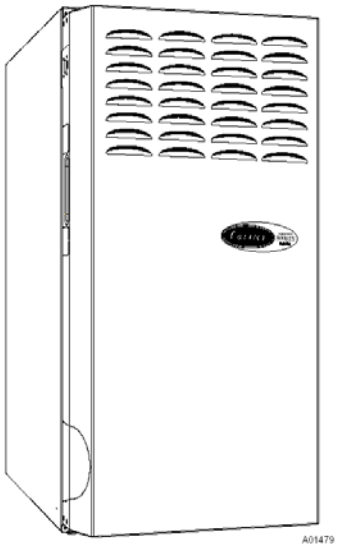

THE INFINITY 80 GAS FURNACE

The 58CVA/CVX Variable-Speed, 4-way Multipoise Gas Furnaces offer unmatched comfort with ComfortHeat™ Technology and IdealHumidity™ in an 80% AFUE gas furnace. You get all the benefits of a ComfortHeat Technology furnace: reduced drafts, reduced sound levels, longer, more gentle cycles, less temperature swings between cycles, and less temperature differences between rooms. With the variable speed blower motor, homeowners can now economically run constant fan to help eliminate temperature differences throughout the house and to get better indoor air quality. This IdealHumidity furnace also increases comfort in the summer by wringing out extra humidity when needed. The 58CVA furnaces are approved for use with natural or propane gas, and the 58CVX is approved for use in low Nox Air Quality Management Districts.

STANDARD FEATURES

- **ComfortHeat™ Technology**
  Intelligent microprocessor control
  Two-stage heating with single-stage thermostat
  Very low operating sound through low-stage operation and **QuieTech™** noise reduction system
- **Integral part of the IdealHumidity™ System**
  Maximum dehumidification selection for summer time cooling
  Full IdealHumidity benefits including “Super Dehumidify”
  Variable-speed blower motor
  Super-low electrical use, up to 80 percent less than standard models
  Increased SEER ratings for AC and HP systems
  Perfectly matches CFM to cooling system at all static points
- **Media Filter Cabinet Included**
- **Microprocessor based "smart" control center**
  Automatically adjusts heating stage times to meet demand
  Adjustable heating air temperature rise
- **ComfortFan™ -** Constant fan speed selectable from thermostat
  Up to 12 cooling airflow selections with a wide range of capability
  LED diagnostics and self test feature
  Stores fault codes during power outages
  Optional laptop and handheld PDA diagnostic software
- **4-way Multipoise furnace, 13 vent applications**
- **Shorter in height – only 33⅓” tall**
- **Power Heat™ Igniter**
- **Draft safeguard switch to ensure proper furnace venting**
- **Insulated blower compartment**
- **Heat pump compatible**
- **All models are Chimney Friendly when used with accessory vent kit**
- **Residential installations eligible for consumer financing through the Retail Credit Program**
- **LIMITED WARRANTY**
- 20-year warranty on "Super S™" heat exchanger
- 5-year parts warranty on all other components

Variable Speed Induced-Combustion Deluxe 4-Way Multipoise Furnace

Cancels: 58CV-4SI/II315A-70-3 58CV-5SI/II315A-70-4
10-05

Installation, Start-up, Operating, and Service and Maintenance Instructions Series 120/C

NOTE: Read the entire instruction manual before starting the installation.

This symbol → indicates a change since the last issue.

Portions of the text and tables are reprinted from NFPA 54/ANSI Z223.1-2006©, with permission of National Fire Protection Association, Quincy, MA 02269 and American Gas Association, Washington DC 20001. This reprinted material is not the complete and official position of the NFPA or ANSI on the referenced subject, which is represented only by the standard in its entirety.

TABLE OF CONTENTS

SAFETY CONSIDERATIONS 2
INTRODUCTION 2
CODES AND STANDARDS 4
- Safety 4
- General Installation 4
- Combustion and Ventilation Air 4
- Duct Systems 4
- Acoustical Lining and Fibrous Glass Duct 4
- Gas Piping and Gas Pipe Pressure Testing 4
- Electrical Connections 4

ELECTROSTATIC DISCHARGE (ESD) PRECAUTIONS PROCEDURE 4
LOCATION 5
- General 5
- Location Relative to Cooling Equipment 7

AIR FOR COMBUSTION AND VENTILATION 7
INSTALLATION 10
- Upflow Installation 10
  - Bottom Return Air Inlet 10
  - Side Return Air Inlet 10
  - Leveling Legs (If Desired) 10
- Downflow Installation 10
  - Bottom Return Air Inlet 11
- Horizontal Installation 12
  - Suspended Furnace Support 12
  - Platform Furnace Support 12
  - Roll-Out Protection 12
  - Bottom Return Air Inlet 14
  - Side Return Air Inlet 14
- Filter Arrangement 16
- Air Ducts 16
  - General Requirements 16
  - Ductwork Acoustical Treatment 16
  - Supply Air Connections 16
  - Return Air Connections 16
- Gas Piping 16
- Electrical Connections 19
  - 115-V Wiring 19
  - J-Box Relocation 20
  - Electrical Connection to J-Box 19
  - Power Cord Installation 20
  - BX Cable Installation 021
  - 24-V Wiring 21
  - Accessories 21
- Venting 22
  - General Venting Requirements 23
  - Masonry Chimney Requirements 28
  - Appliance Application Requirements 28
  - Additional Venting Requirements 29
  - Sidewall Venting 33

START-UP, ADJUSTMENT, AND SAFETY CHECK 33
- General 33
- Start-Up Procedures 34
- Adjustments 34
- Check Safety Controls 43
- Checklist 43

SERVICE AND MAINTENANCE PROCEDURES 44
- Introduction 44
  - General 44
  - Electrical Controls and Wiring 44
- Care and Maintenance 45
  - Cleaning and/or Replacing Air Filter 46
  - Blower Motor and Wheel 46
  - Cleaning Heat Exchanger 47
- Sequence of Operation 49
- Wiring Diagrams 53
- Troubleshooting 53

SAFETY CONSIDERATIONS

⚠ WARNING

FIRE, EXPLOSION, ELECTRICAL SHOCK, AND CARBON MONOXIDE POISONING HAZARD

Failure to follow this warning could result in dangerous operation, serious injury, death, or property damage.

Improper installation, adjustment, alteration, service, maintenance, or use can cause carbon monoxide poisoning, explosion, fire, electrical shock, or other conditions which may cause personal injury or property damage. Consult a qualified service agency, local gas supplier, or your distributor or branch for information or assistance. The qualified service agency must use only factory-authorized and listed kits or accessories when modifying this product.

⚠ CAUTION

FURNACE RELIABILITY HAZARD

Improper installation or misapplication of furnace may require excessive servicing or cause premature component failure.

Application of this furnace should be indoors with special attention given to vent sizing and material, gas input rate, air temperature rise, unit leveling, and unit sizing.

Installing and servicing heating equipment can be hazardous due to gas and electrical components. **Only trained and qualified personnel should install, repair, or service heating equipment.** Untrained personnel can perform basic maintenance functions such as cleaning and replacing air filters. All other operations must be performed by trained service personnel. When working on heating equipment, observe precautions in literature, on tags, and on labels attached to or shipped with furnace and other safety precautions that may apply.

These instructions cover minimum requirements and conform to existing national standards and safety codes. In some instances, these instructions exceed certain local codes and ordinances, especially those that may not have kept up with changing residential construction practices. We require these instructions as a minimum for a safe installation.

⚠ CAUTION

→ **CUT HAZARD**

Failure to follow this caution may result in personal injury.

Sheet metal parts may have sharp edges or burrs. Use care and wear appropriate protective clothing, safety glasses and gloves when handling parts, and servicing furnaces.

Wear safety glasses and work gloves. Have fire extinguisher available during start-up and adjustment procedures and service calls.

This is the safety-alert symbol ⚠. When you see this symbol on the furnace and in instructions or manuals, be alert to the potential for personal injury.

Understand the signal words DANGER, WARNING, and CAUTION. These words are used with the safety-alert symbol. DANGER identifies the most serious hazards which **will** result in severe personal injury or death. WARNING signifies a hazard which **could** result in personal injury or death. CAUTION is used to identify hazards which **may** result in minor personal injury or product and property damage. NOTE is used to highlight suggestions which will result in enhanced installation, reliability, or operation.

1. Use only with type of gas approved for this furnace. Refer to the furnace rating plate.
2. Install this furnace only in a location and position as specified in the "Location" section of these instructions.
3. Provide adequate combustion and ventilation air to the furnace space as specified in "Air for Combustion and Ventilation" section.
4. Combustion products must be discharged outdoors. Connect this furnace to an approved vent system only, as specified in the "Venting" section of these instructions.
5. Never test for gas leaks with an open flame. Use a commercially available soap solution made specifically for the detection of leaks to check all connections, as specified in the "Gas Piping" section.
6. Always install furnace to operate within the furnace's intended temperature-rise range with a duct system which has an external static pressure within the allowable range, as specified in the "Start-Up, Adjustments, and Safety Check" section. See furnace rating plate.
7. When a furnace is installed so that supply ducts carry air circulated by the furnace to areas outside the space containing the furnace, the return air shall also be handled by duct(s) sealed to the furnace casing and terminating outside the space containing the furnace. See "Air Ducts" section.
8. A gas-fired furnace for installation in a residential garage must be installed as specified in the warning box in the "Location" section.
9. The furnace is not to be used for temporary heating of buildings or structures under construction. See page 7 caution box regarding the heating of building under construction.
10. These Multipoise Gas-Fired Furnaces are CSA (formerly A.G.A. and C.G.A.) design-certified for use with natural and propane gases (see furnace rating plate) and for installation in alcoves, attics, basements, closets, utility rooms, crawlspaces, and garages. The furnace is factory-shipped for use with natural gas. A CSA (A.G.A. and C.G.A.) listed gas conversion kit is required to convert furnace for use with propane gas.
11. See Fig. 1 for required clearances to combustible construction.
12. Maintain a 1-in. clearance from combustible materials to supply air ductwork for a distance of 36 inches horizontally from the furnace. See NFPA 90B or local code for further requirements.
13. These furnaces SHALL NOT be installed directly on carpeting, tile, or any other combustible material other than wood flooring. In downflow installations, factory accessory floor base MUST be used when installed on combustible materials and wood flooring. Special base is not required when this furnace is installed on manufacturer's Coil Assembly Part No. CD5 or CK5, or when Coil Box Part No. KCAKC is used. See Fig. 1 for clearance to combustible construction information.

INTRODUCTION

→ The Series 120/C 4–way multipoise Category I fan-assisted furnace is CSA (formerly A.G.A. and C.G.A.) design-certified. A Category I fan-assisted furnace is an appliance equipped with an integral mechanical means to either draw or force products of combustion through the combustion chamber and/or heat exchanger. The furnace is factory-shipped for use with natural gas. This furnace is **not** approved for installation in mobile homes, recreational vehicles, or outdoors.

INSTALLATION

MINIMUM INCHES CLEARANCE TO COMBUSTIBLE CONSTRUCTION
DISTANCE MINIMALE EN POUCES AUX CONSTRUCTIONS COMBUSTIBLES

This forced air furnace is equipped for use with natural gas at altitudes 0-10,000 ft (0-3,050m).

An accessory kit, supplied by the manufacturer, shall be used to convert to propane gas use or may be required for some natural gas applications.

This furnace is for indoor installation in a building constructed on site.

This furnace may be installed on combustible flooring in alcove or closet at minimum clearance as indicated by the diagram from combusitble material.

This furnace may be used with a Type B-1 Vent and may be vented in common with other gas fired appliances.

Cette fournaise à air pulsé est équipée pour utilisation avec gaz naturel et altitudes comprises entre 0-3,050m (0-10,000 pi).

Utiliser une trousse de conversion, fournie par le fabricant, pour passer au gaz propane ou pour certaines installations au gaz naturel.

Cette fournaise est prévue pour être installée dans un bâtiment construit sur place.

Cette fournaise peut être installée sur un plancher combustible dans une alcôve ou dans un garde-robe en respectant le minimum d'espace libre des matériaux combustibles, tel qu´indiqué sur le diagramme.

Cette fournaise peut être utilisée avec un conduit d´évacuation de Type B-1 ou connectée au conduit ommun d 'autres appareils à gaz.

This furnace is approved for UPFLOW, DOWNFLOW, and HORIZONTAL installations.

Cette fournaise est approuvée pour l 'installation HORIZONTALE et la circulation d 'air VERS LE HAUT et VERS LE BAS.

Clearance arrows do not change with furnace orientation.

Les fléches de dégagement ne change pas avec l 'orientation de la fournaise.

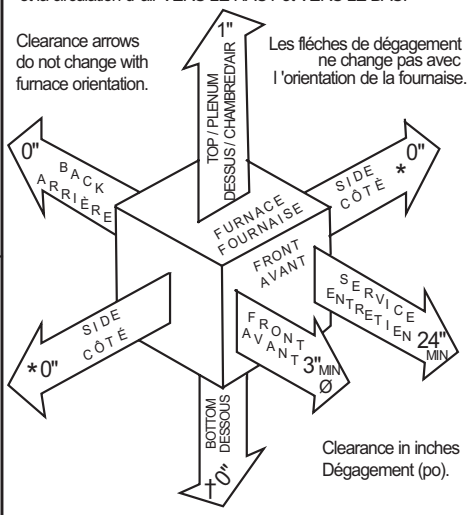

Clearance in inches
Dégagement (po).

Vent Clearance to combustibles:
For Single Wall vents 6 inches (6 po).
For Type B-1 vent type 1 inch (1 po).

Dégagement de l´évent avec combustibles:
Pour conduit d´évacuation à paroi simple 6 po (6 inches).
Pour conduit d´évacuation de Type B-1 1 po (1 inch).

MINIMUM INCHES CLEARANCE TO COMBUSTIBLE CONSTRUCTION

DOWNFLOW POSITIONS:

† Installation on non-combusibible floors only.
For Installation on combustible flooring only when installed on special base, Part No. KGASB0201ALL, Coil Assembly, Part No. CD5 or CK5, or Coil Casing, Part No. KCAKC.

Ø 18 inches front clearance required for alcove.

* Indicates supply or return sides when furnace is in the horizontal position. Line contact only permissible between lines formed by intersections of the Top and two Sides of the furnace jacket, and building joists, studs or framing.

DÉGAGEMENT MINIMUM EN POUCES AVEC ÉLÉMENTS DE CONSTRUCTION COMBUSTIBLES

POUR LA POSITION COURANT DESCENDANT:

† Pour l´installation sur plancher non combustible seulement.
Pour l´installation sur un plancher combustible seulement quand on utilise la base spéciale, pièce nº KGASB0201ALL, l´ensemble serpentin, pièce nº CD5 ou CK5, ou le carter de serpentin, pièce nº KCAKC.

Ø Dans une alcôve, on doit maintenir un dégagement à l´avant de 18 po (450mm).

* La poistion indiquée concerne le côté d´entrée ou de retour quand la fournaise est dans la position horizontale.
Le contact n´est permis qu´entre les lignes formées par les intersections du dessus et des deux côtés de la cherrise de la fournaise et les solives, montant sous cadre de charpente.

327590-101 REV. C

Fig. 1—Clearances to Combustibles

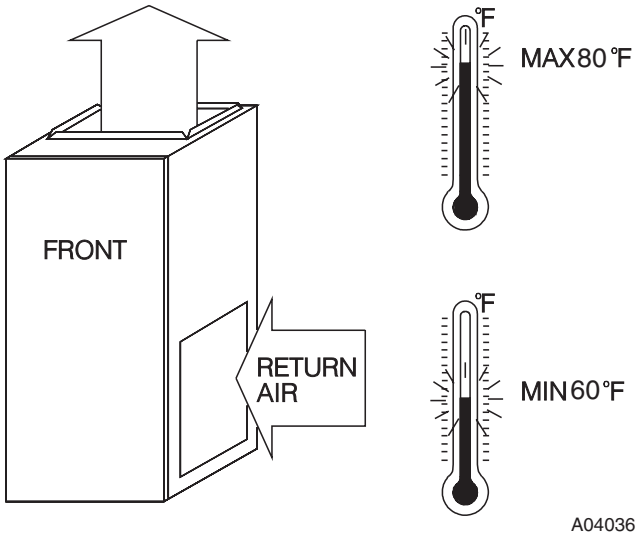

Fig. 2—Return Air Temperature

This furnace is designed for minimum continuous return-air temperature of 60°F db or intermittent operation down to 55°F db such as when used with a night setback thermostat. Return-air temperature must not exceed 80°F db. Failure to follow these return-air temperature limits may affect reliability of heat exchangers, motors, and controls. (See Fig. 2.)

For accessory installation details, refer to the applicable instruction literature.

NOTE: Remove all shipping brackets and materials before operating the furnace.

CODES AND STANDARDS

Follow all national and local codes and standards in addition to these instructions. The installation must comply with regulations of the serving gas supplier, local building, heating, plumbing, and other codes. In absence of local codes, the installation must comply with the national codes listed below and all authorities having jurisdiction.

In the United States and Canada, follow all codes and standards for the following:

Step 1—Safety

- US: National Fuel Gas Code (NFGC) NFPA 54–2002/ANSI Z223.1–2002 and the Installation Standards, Warm Air Heating and Air Conditioning Systems ANSI/NFPA 90B
- CANADA: CSA B149.1-00 National Standard of Canada Natural Gas and Propane Installation Code (NSCNGPIC)

Step 2—General Installation

- US: Current edition of the NFGC and the NFPA 90B. For copies, contact the National Fire Protection Association Inc., Batterymarch Park, Quincy, MA 02269; (www.NFPA.org) or for only the NFGC, contact the American Gas Association, 400 N. Capitol Street, N.W., Washington, DC 20001 (www.AGA.org.)
- CANADA: NSCNGPIC. For a copy, contact Standard Sales, CSA International, 178 Rexdale Boulevard, Etobicoke (Toronto), Ontario, M9W 1R3 Canada

Step 3—Combustion and Ventilation Air

- US: Section 8.3 of the NFGC, Air for Combustion and Ventilation
- CANADA: Part 7 of NSCNGPIC, Venting Systems and Air Supply for Appliances

Step 4—Duct Systems

- US and CANADA: Air Conditioning Contractors Association (ACCA) Manual D, Sheet Metal and Air Conditioning Contractors National Association (SMACNA), or American Society of Heating, Refrigeration, and Air Conditioning Engineers (ASHRAE) 2001 Fundamentals Handbook Chapter 34 or 2000 HVAC Systems and Equipment Handbook Chapters 9 and 16.

Step 5—Acoustical Lining and Fibrous Glass Duct

- US and CANADA: current edition of SMACNA and NFPA 90B as tested by UL Standard 181 for Class I Rigid Air Ducts

Step 6—Gas Piping and Gas Pipe Pressure Testing

- US: NFGC; chapters 5, 6, 7, and 12 and National Plumbing Codes
- CANADA: NSCNGPIC Parts 3, 4, and 5, and Appendices A, B, E and H.

Step 7—Electrical Connections

- US: National Electrical Code (NEC) ANSI/NFPA 70–2002
- CANADA: Canadian Electrical Code CSA C22.1

Step 8—Venting

- US: NFGC; chapters 10 and 13
- CANADA: NSCNGPIC Part 7 and Appendix C

ELECTROSTATIC DISCHARGE (ESD) PRECAUTIONS PROCEDURE

⚠ CAUTION

FURNACE RELIABILITY HAZARD

Improper installation or service of furnace may cause premature furnace component failure.

Electrostatic discharge can affect electronic components. Take precautions during furnace installation and servicing to protect the furnace electronic control. Precautions will prevent electrostatic discharges from personnel and hand tools which are held during the procedure. These precautions will help to avoid exposing the control to electrostatic discharge by putting the furnace, the control, and the person at the same electrostatic potential.

1. Disconnect all power to the furnace. Multiple disconnects may be required. DO NOT TOUCH THE CONTROL OR **ANY** WIRE CONNECTED TO THE CONTROL PRIOR TO DISCHARGING YOUR BODY'S ELECTROSTATIC CHARGE TO GROUND.
2. Firmly touch the clean, unpainted, metal surface of the furnace chassis which is close to the control. Tools held in a person's hand during grounding will be satisfactorily discharged.
3. After touching the chassis, you may proceed to service the control or connecting wires as long as you do nothing to recharge your body with static electricity (for example; DO NOT move or shuffle your feet, do not touch ungrounded objects, etc.).
4. If you touch ungrounded objects (and recharge your body with static electricity), firmly touch a clean, unpainted metal surface of the furnace again before touching control or wires.
5. Use this procedure for installed and uninstalled (ungrounded) furnaces.
6. Before removing a new control from its container, discharge your body's electrostatic charge to ground to protect the control from damage. If the control is to be installed in a furnace, follow items 1 through 4 before bringing the control or yourself in contact with the furnace. Put all used and new controls into containers before touching ungrounded objects.

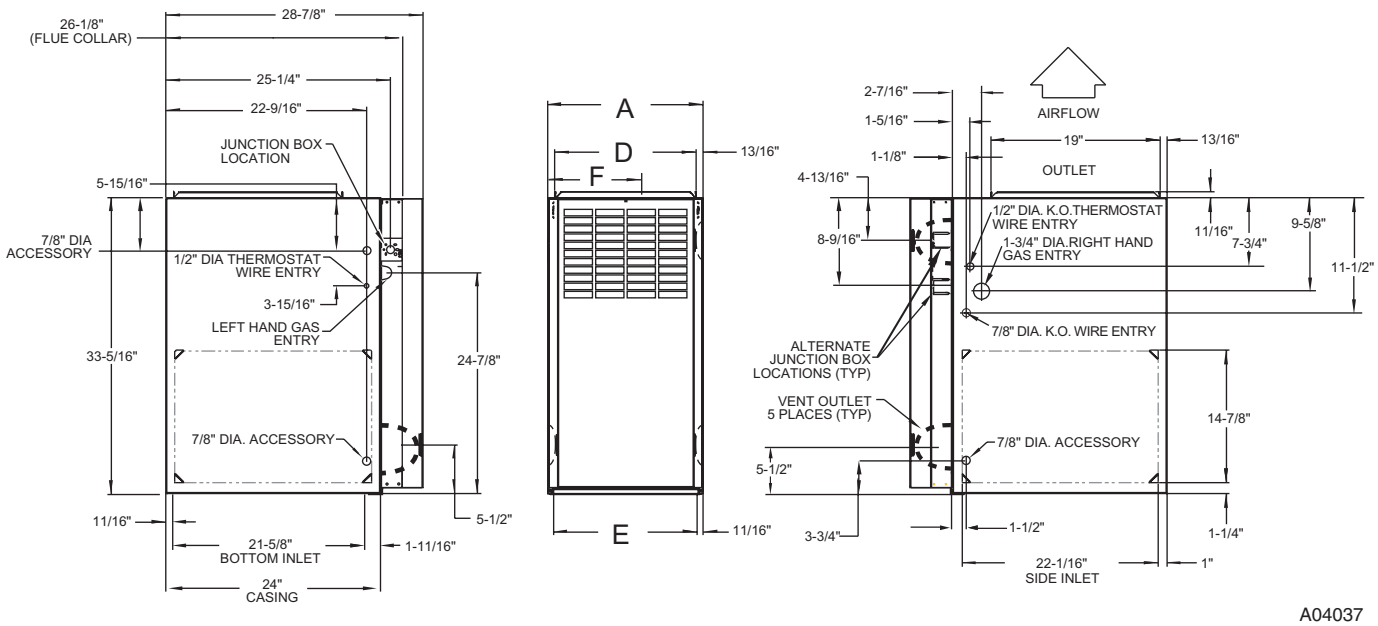

NOTES:
1. Two additional 7/8-in. diameter holes are located in the top plate.
2. Minimum return-air openings at furnace, based on metal duct. If flex duct is used, see flex duct manufacturer's recommendations for equivalent diameters.
   a. For 800 CFM-16-in. round or 14 1/2 x 12-in. rectangle.
   b. For 1200 CFM-20-in. round or 14 1/2 x 19 1/2-in. rectangle.
   c. For 1600 CFM-22-in. round or 14 1/2 x 22 1/16-in. rectangle.
   d. For airflow requirements above 1800 CFM, see Air Delivery table in Product Data literature for specific use of single side inlets. The use of both side inlets, a combination of 1 side and the bottom, or the bottom only will ensure adequate return air openings for airflow requirements above 1800 CFM.

Fig. 3—Dimensional Drawing

Table 1—Dimensions (IN.)

FURNACE SIZE	A CABINET WIDTH (IN.)	D SUPPLY-AIR WIDTH (IN.)	E RETURN-AIR WIDTH (IN.)	F C.L. TOP AND BOTTOM FLUE COLLAR (IN.)	FLUE COLLAR* (IN.)	SHIP WT. (LB)	FILTER MEDIA CABINET SIZE (IN.)
070-12/036070	14-3/16	12-9/16	12-11/16	9-5/16	4	127	16
090-16/048090	17-1/2	15-7/8	16	11-9/16	4	151	16
110-20/060110	21	19-3/8	19-1/2	13-5/16	4	163	20
135-22/066135	24-1/2	22-7/8	23	15-1/16	4†	177	24
155-22/066155	24-1/2	22-7/8	23	15-1/16	4†	183	24

* 5" or 6" vent connector may be required in some cases.
†5″ or larger vent is required. Use a 4-5 or 4-6 inch vent adapter between furnace and vent connector.

7. An ESD service kit (available from commercial sources) may also be used to prevent ESD damage.

LOCATION

GENERAL

This multipoise furnace is shipped in packaged configuration. Some assembly and modifications are required when used in any of the four applications shown in Fig. 4.

NOTE: For high-altitude installations, the high-altitude conversion kit MUST be installed at or above 5500 ft above sea level. Obtain high-altitude conversion kit from your area authorized distributor.

This furnace must:

- be installed so the electrical components are protected from water.
- **not** be installed directly on any combustible material other than wood flooring (refer to SAFETY CONSIDERATIONS).
- be located close to the chimney or vent and attached to an air distribution system. Refer to Air Ducts section.
- be provided ample space for servicing and cleaning. Always comply with minimum fire protection clearances shown on the furnace clearance to combustible construction label.

⚠ WARNING

→ **CARBON MONOXIDE POISONING AND UNIT DAMAGE HAZARD**

Failure to follow this warning could result in personal injury or death and furnace damage.

Corrosive or contaminated air may cause failure of parts containing flue gas, which could leak into the living space. Air for combustion must not be contaminated by halogen compounds, which include fluoride, chloride, bromide, and iodide. These elements can corrode heat exchangers and shorten furnace life. Air contaminants are found in aerosol sprays, detergents, bleaches, cleaning solvents, salts, air fresheners, and other household products. Do not install furnace in a corrosive or contaminated atmosphere. Make sure all combustion and circulating air requirements are met, in addition to all local codes and ordinances.

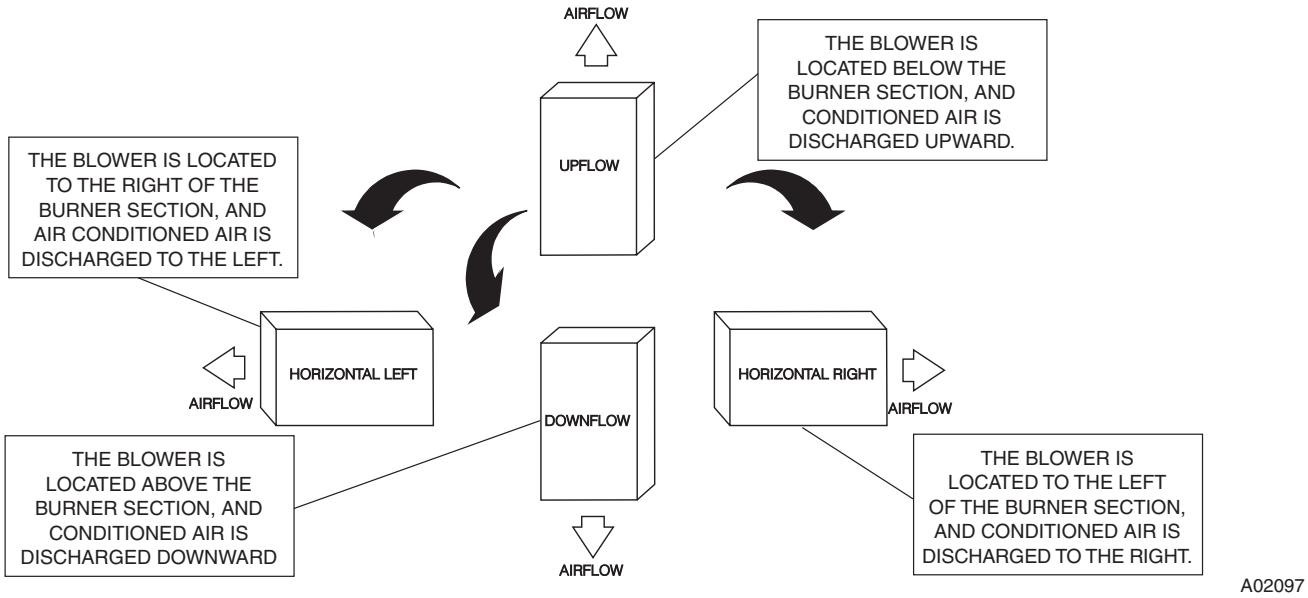

Fig. 4—Multipoise Orientations

The following types of furnace installations may require OUTDOOR AIR for combustion due to chemical exposures:

- Commercial buildings
- Buildings with indoor pools
- Laundry rooms
- Hobby or craft rooms, and
- Chemical storage areas

If air is exposed to the following substances, it should not be used for combustion air, and outdoor air may be required for combustion:

- Permanent wave solutions
- Chlorinated waxes and cleaners
- Chlorine based swimming pool chemicals
- Water softening chemicals
- De-icing salts or chemicals
- Carbon tetrachloride
- Halogen type refrigerants
- Cleaning solvents (such as perchloroethylene)
- Printing inks, paint removers, varnishes, etc.
- Hydrochloric acid
- Cements and glues
- Antistatic fabric softeners for clothes dryers
- Masonry acid washing materials

All fuel-burning equipment must be supplied with air for fuel combustion. Sufficient air **must** be provided to avoid negative pressure in the equipment room or space. A positive seal **must** be made between the furnace cabinet and the return-air duct to prevent pulling air from the burner area and from draft safeguard opening.

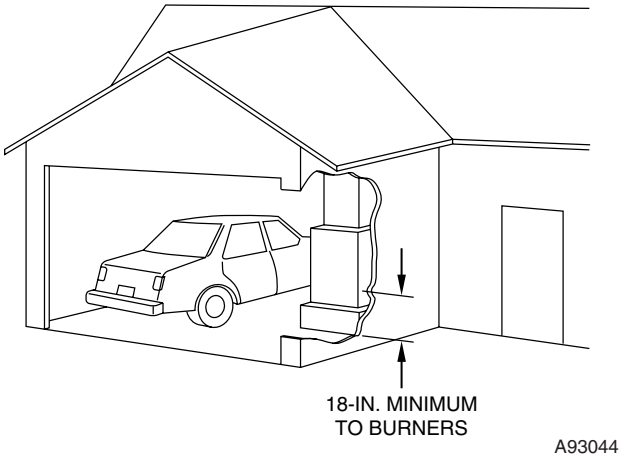

Fig. 5—Installation in a Garage

⚠ WARNING

→ **FIRE AND EXPLOSION HAZARD**

Failure to follow this warning could result in personal injury, death and/or property damage.

When the furnace is installed in a residential garage, the burners and ignition sources must be located at least 18 inches above the floor. The furnace must be located or protected to avoid damage by vehicles. When the furnace is installed in a public garage, airplane hangar, or other building having a hazardous atmosphere, the furnace must be installed in accordance with the NFGC or NSCNGPIC. (See Fig. 5.)

⚠ CAUTION

PROPERTY DAMAGE HAZARD

Improper use or installation of this furnace may cause premature furnace component failure.

This gas furnace may be used for heating buildings under construction provided that:

-The furnace is permanently installed with all electrical wiring, piping, venting and ducting installed according to these installation instructions. A return air duct is provided, sealed to the furnace casing, and terminated outside the space containing the furnace. This prevents a negative pressure condition as created by the circulating air blower, causing a flame rollout and/or drawing combustion products into the structure.

-The furnace is controlled by a thermostat. It may not be ″hot wired″ to provide heat continuously to the structure without thermostatic control.

-Clean outside air is provided for combustion. This is to minimize the corrosive effects of adhesives, sealers and other construction materials. It also prevents the entrainment of drywall dust into combustion air, which can cause fouling and plugging of furnace components.

-The temperature of the return air to the furnace is maintained between 55°F (13°C) and 80°F (27°C), with no evening setback or shutdown. The use of the furnace while the structure is under construction is deemed to be intermittent operation per our installation instructions.

-The air temperature rise is within the rated rise range on the furnace rating plate, and the gas input rate has been set to the nameplate value.

-The filters used to clean the circulating air during the construction process must be either changed or thoroughly cleaned prior to occupancy.

-The furnace, ductwork and filters are cleaned as necessary to remove drywall dust and construction debris from all HVAC system components after construction is completed.

-Verify proper furnace operating conditions including ignition, gas input rate, air temperature rise, and venting according to these installation instructions.

⚠ WARNING

→ **FIRE HAZARD**

Failure to follow this warning could result in unsafe furnace operation, personal injury, death, and/or property damage.

Do not install the furnace on its back or hang furnace with control compartment facing downward. Safety control operation will be adversely affected. Never connect return-air ducts to the back of the furnace. (See Fig. 6.)

LOCATION RELATIVE TO COOLING EQUIPMENT

The cooling coil must be installed parallel with, or on the downstream side of the unit to avoid condensation in the heat exchangers. When installed parallel with the furnace, dampers or other flow control must prevent chilled air from entering the furnace. If the dampers are manually operated, they must be equipped with means to prevent operation of either unit unless the damper is in the full-heat or full-cool position.

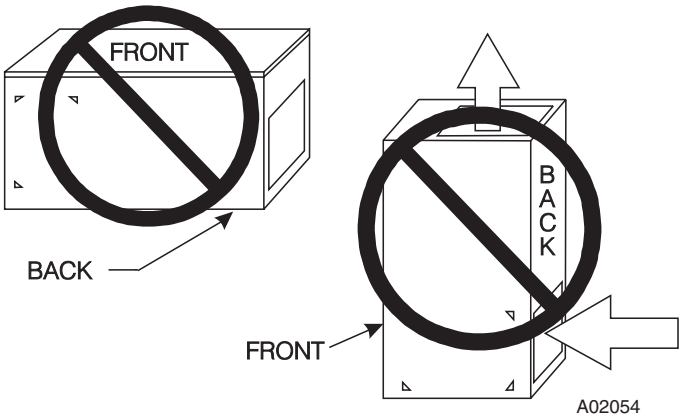

Fig. 6—Prohibit Installation on Back

AIR FOR COMBUSTION AND VENTILATION

Provisions for adequate combustion, ventilation, and dilution air must be provided in accordance with:

- **U.S. Installations:** Section 8.3 of the NFGC, Air for Combustion and Ventilation and applicable provisions of the local building codes.
- **Canadian Installations:** Part 7 of the NSCNGPIC, Venting Systems and Air Supply for Appliances and all authorities having jurisdiction.

⚠ CAUTION

→ **FURNACE CORROSION HAZARD**

Failure to follow this caution may result in furnace damage.

Air for combustion must not be contaminated by halogen compounds, which include fluoride, chloride, bromide, and iodide. These elements can corrode heat exchangers and shorten furnace life. Air contaminants are found in aerosol sprays, detergents, bleaches, cleaning solvents, salts, air fresheners, and other household products.

⚠ WARNING

CARBON MONOXIDE POISONING HAZARD

Failure to follow this warning could result in personal injury or death.

The operation of exhaust fans, kitchen ventilation fans, clothes dryers, attic exhaust fans or fireplaces could create a NEGATIVE PRESSURE CONDITION at the furnace. Make-up air MUST be provided for the ventilation devices, in addition to that required by the furnace. Refer to the Carbon Monoxide Poisoning Hazard warning in the venting section of these instructions to determine if an adequate amount of make-up air is available.

The requirements for combustion and ventilation air depend upon whether or not the furnace is located in a space having a volume of at least 50 cubic feet per 1,000 Btuh input rating for all gas appliances installed in the space.

- Spaces having less than 50 cubic feet per 1,000 Btuh require the **OUTDOOR COMBUSTION AIR** METHOD.
- Spaces having at least 50 cubic feet per 1,000 Btuh may use the **INDOOR COMBUSTION AIR, STANDARD** or **KNOWN-AIR INFILTRATION** METHOD.

Table 2–Minimum Free Area Required for Each Combustion Air Opening or Duct to Outdoors

FURNACE INPUT (BTUH)	TWO HORIZONTAL DUCTS (1 SQ. IN./2,000 BTUH) (1,100 SQ. MM/KW)		SINGLE DUCT OR OPENING (1 SQ. IN./3,000 BTUH) (734 SQ. MM/KW)		TWO OPENINGS OR VERTICAL DUCTS (1 SQ. IN./4,000 BTUH) (550 SQ. MM/KW)	
	Free Area of Opening and Duct (Sq. In.)	Round Duct (in. Dia)	Free Area of Opening and Duct (sq In.)	Round Duct (in. Dia)	Free Area of Opening and Duct (Sq In.)	Round Duct (In. Dia)
44,000	22	6	14.7	5	11	4
66,000	33	7	22	6	16.5	5
88,000	44	8	29.3	7	22	6
110,000	55	9	36.7	7	27.5	6
132,000	66	10	44	8	33	7
154,000	77	10	51.3	9	38.5	8

EXAMPLES: Determining Free Area

FURNACE		WATER HEATER		TOTAL INPUT		
110,000	+	30,000	=	(140,000 divided by 4,000)	=	35.0 Sq. In. for each two Vertical Ducts or Openings
66,000	+	40,000	=	(106,000 divided by 3,000)	=	35.3 Sq. In. for a Single Duct or Opening
88,000	+	30,000	=	(118,000 divided by 2,000)	=	59.0 Sq. In. for each of two Horizontal Ducts

Table 3–Minimum Space Volumes for 100% Combustion, Ventilation, and Dilution from Indoors

ACH	OTHER THAN FAN-ASSISTED TOTAL (1,000'S BTUH GAS INPUT RATE)			FAN-ASSISTED TOTAL (1,000'S BTUH GAS INPUT RATE)					
	30	40	50	44	66	88	110	132	154
	Space Volume (ft^3)								
0.60	1,050	1,400	1,750	1,100	1,650	2,200	2,750	3,300	3,850
0.50	1,260	1,680	2,100	1,320	1,980	2,640	3,300	3,960	4,620
0.40	1,575	2,100	2,625	1,650	2,475	3,300	4,125	4,950	5,775
0.30	2,100	2,800	3,500	2,200	3,300	4,400	5,500	6,600	7,700
0.20	3,150	4,200	5,250	3,300	4,950	6,600	8,250	9,900	11,550
0.10	6,300	8,400	10,500	6,600	9,900	13,200	16,500	19,800	23,100
0.00	NP	NP	NP	NP	NP	NP	NP	NP	NP

NP = Not Permitted

Outdoor Combustion Air Method

1. Provide the space with sufficient air for proper combustion, ventilation, and dilution of flue gases using permanent horizontal or vertical duct(s) or opening(s) directly communicating with the outdoors or spaces that freely communicate with the outdoors.
2. Fig. 7 illustrates how to provide TWO OUTDOOR OPENINGS, one inlet and one outlet combustion and ventilation air opening, to the outdoors.
   a. One opening **MUST** commence within 12″ (300 mm) of the ceiling and the second opening **MUST** commence within 12″ (300 mm) of the floor.
   b. Size openings and ducts per Fig. 7 and Table 2.
   c. TWO HORIZONTAL DUCTS require 1 square inch of free area per 2,000 Btuh (1,100 mm^2/kW) of combined input for all gas appliances in the space per Fig. 7 and Table 2.
   d. TWO OPENINGS OR VERTICAL DUCTS require 1 square inch of free area per 4,000 Btuh (550 mm^2/kW) for combined input of all gas appliances in the space per Fig. 7 and Table 2.
3. ONE OUTDOOR OPENING requires:
   a. 1 square inch of free area per 3,000 Btuh (734 mm^2/kW) for combined input of all gas appliances in the space per Table 2 and
   b. Not less than the sum of the areas of all vent connectors in the space.

The opening shall commence within 12″ (300 mm) of the ceiling. Appliances in the space shall have clearances of at least 1″ (25 mm) from the sides and back and 6″ (150 mm) from the front. The opening shall directly communicate with the outdoors or shall communicate through a vertical or horizontal duct to the outdoors or spaces (crawl or attic) that freely communicate with the outdoors.

Indoor Combustion Air© NFPA & AGA

Standard and **Known-Air-Infiltration Rate** Methods

Indoor air is permitted for combustion, ventilation, and dilution, if the **Standard** or **Known-Air-Infiltration** Method is used.

⚠ WARNING

→ **CARBON MONOXIDE POISONING HAZARD**
Failure to supply outdoor air via grilles or ducts could result in death and/or personal injury.
Many homes require air to be supplied from outdoors for furnace combustion, ventilation, and dilution of flue gases. The furnace combustion air supply must be provided in accordance with this instruction manual.

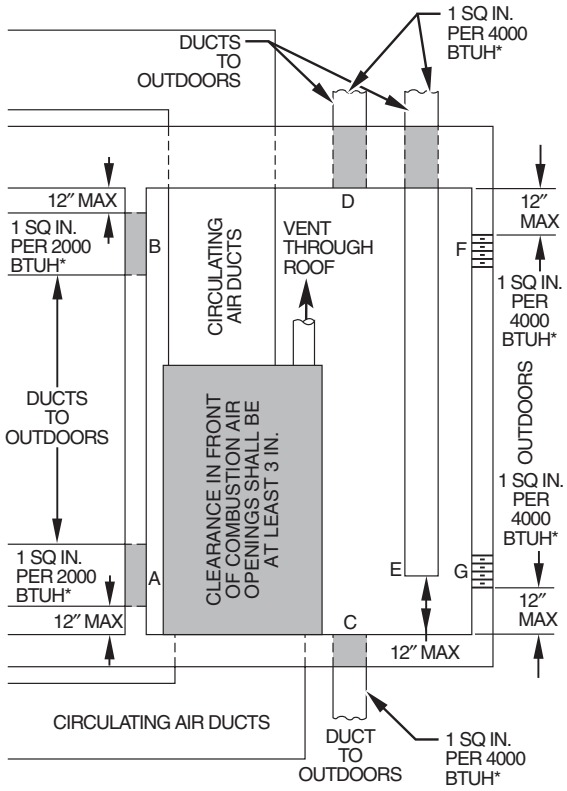

*Minimum dimensions of 3 in.

NOTE: Use any of the following combinations of openings:
A & B C & D D & E F & G

A03174

Fig. 7—Air for Combustion, Ventilation, and Dilution for Outdoors

The **Standard** Method:

1. The space has no less volume than 50 cubic feet per 1,000 Btuh of the maximum input ratings for all gas appliances installed in the space and
2. The air infiltration rate is not known to be less than 0.40 air changes per hour (ACH).

The **Known Air Infiltration Rate** Method shall be used, if the infiltration rate is known to be:

1. Less than 0.40 ACH and
2. Equal to or greater than 0.10 ACH

Infiltration rates greater than 0.60 ACH shall not be used. The minimum required volume of the space varies with the number of ACH and shall be determined per Table 3 or Equations 1 and 2. Determine the minimum required volume for each appliance in the space and add the volumes together to get the total minimum required volume for the space.

Table 3-Minimum Space Volumes were determined by using the following equations from the *National Fuel Gas Code ANSI Z223.1-2002/NFPA 54-2002,8.3.2.2*:

1. For **other than fan-assisted appliances**, such as a draft hood-equipped water heater:

$$\text{Volume}_{\text{Other}} = \frac{21\text{ft}^3}{\text{ACH}}\left(\frac{I_{\text{other}}}{1000\ \text{Btu/hr}}\right)$$

A04002

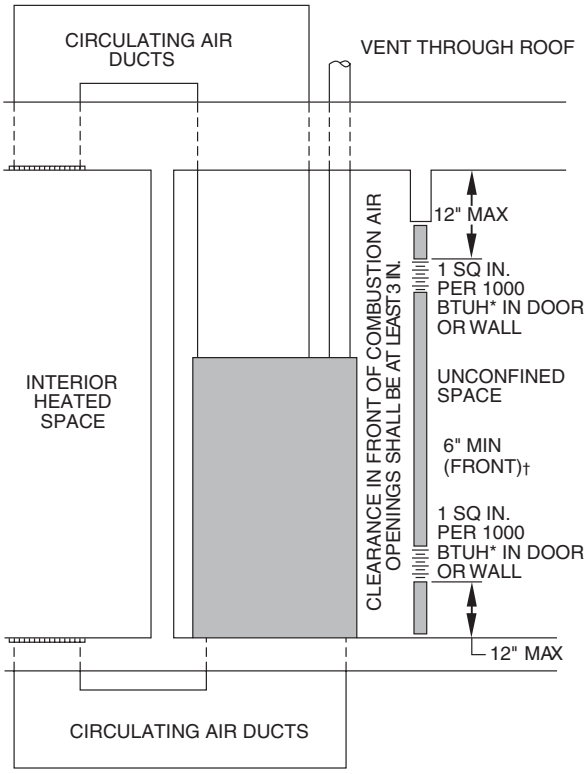

* Minimum opening size is 100 sq in. with minimum dimensions of 3 in.

† Minimum of 3 in. when type-B1 vent is used.

A03175

Fig. 8—Air for Combustion, Ventilation, and Dilution from Indoors

2. For **fan-assisted appliances** such as this furnace:

$$\text{Volume}_{\text{Fan}} = \frac{15\text{ft}^3}{\text{ACH}}\left(\frac{I_{\text{fan}}}{1000\ \text{Btu/hr}}\right)$$

A04003

If:

I_{other} = combined input of all **other than fan-assisted appliances** in Btu/hr

I_{fan} = combined input of all **fan-assisted appliances** in Btu/hr

ACH = air changes per hour (ACH shall not exceed 0.60.)

The following requirements apply to the **Standard** Method and to the **Known Air Infiltration Rate** Method.

1. Adjoining rooms can be considered part of a space if:
   a. There are no closable doors between rooms.
   b. Combining spaces on same floor level. Each opening shall have free area of at least 1 in.^{2}/1,000 Btuh (2,000 mm^2/kW) of the total input rating of all gas appliances in the space, but not less than 100 in.^{2} (0.06 m^2). One opening shall commence within 12″ (300 mm) of the ceiling and the second opening shall commence within 12″ (300 mm) of the floor. The minimum dimension of air openings shall be at least 3 in. (80 mm). (See Fig. 8.)
   c. Combining space on different floor levels. The volumes of spaces on different floor levels shall be considered as communicating spaces if connected by one or more permanent openings in doors or floors having free area of at least 2 in.^{2}/1,000 Btuh (4,400 mm^2/kW) of total input rating of all gas appliances.

2. An attic or crawlspace may be considered a space that freely communicates with the outdoors provided there are adequate permanent ventilation openings directly to outdoors having free area of at least 1-in.^{2}/4,000 Btuh of total input rating for all gas appliances in the space.
3. In spaces that use the **Indoor Combustion Air** Method, infiltration should be adequate to provide air for combustion, permanent ventilation and dilution of flue gases. However, in buildings with unusually tight construction, additional air MUST be provided using the methods described in the **Outdoor Combustion Air** Method section.
   Unusually tight construction is defined as
   Construction with:
   a. Walls and ceilings exposed to the outdoors have a continuous, sealed vapor barrier. Openings are gasketed or sealed and
   b. Doors and openable windows are weatherstripped and
   c. Other openings are caulked or sealed. These include joints around window and door frames, between sole plates and floors, between wall-ceiling joints, between wall panels, at penetrations for plumbing, electrical and gas lines, etc.

Combination of Indoor and Outdoor Air

1. Indoor openings shall comply with the **Indoor Combustion Air** Method below and,
2. Outdoor openings shall be located as required in the **Outdoor Combustion Air** Method mentioned previously and,
3. Outdoor openings shall be sized as follows:
   a. Calculate the Ratio of all Indoor Space volume divided by required volume for **Indoor Combustion Air** Method below.
   b. Outdoor opening size reduction **Factor** is 1 minus the **Ratio** in a. above.
   c. Minimum size of Outdoor openings shall be the size required in **Outdoor Combustion Air** Method above multiplied by reduction **Factor** in b. above. The minimum dimension of air openings shall be not less than 3 in. (80 mm).

INSTALLATION

UPFLOW INSTALLATION

Bottom Return Air Inlet

These furnaces are shipped with bottom closure panel installed in bottom return-air opening. Remove and discard this panel when bottom return air is used. To remove bottom closure panel, perform the following:

1. Tilt or raise furnace and remove 2 screws holding bottom filler panel. (See Fig. 9.)
2. Rotate bottom filler panel downward to release holding tabs.
3. Remove bottom closure panel.
4. Reinstall bottom filler panel and screws.

Side Return Air Inlet

These furnaces are shipped with bottom closure panel installed in bottom return-air opening. This panel MUST be in place when only side return air is used.

NOTE: Side return-air openings can be used in UPFLOW and most HORIZONTAL configurations. Do not use side return-air openings in DOWNFLOW configuration.

Leveling Legs (If Desired)

In upflow position with side return inlet(s), leveling legs may be used. (See Fig. 10.) Install field-supplied, 5/16 X 1-1/2 in. (max) corrosion-resistant machine bolts, washers and nuts.

NOTE: Bottom closure must be used when leveling legs are used. It may be necessary to remove and reinstall bottom closure panel to install leveling legs. To remove bottom closure panel, see Item 1 in Bottom Return Air Inlet section in Step 1 above.

To install leveling legs:

1. Position furnace on its back. Locate and drill a hole in each bottom corner of furnace. (See Fig. 10.)
2. For each leg, install nut on bolt and then install bolt with nut in hole. (Install flat washer if desired.)
3. Install another nut on other side of furnace base. (Install flat washer if desired.)
4. Adjust outside nut to provide desired height, and tighten inside nut to secure arrangement.
5. Reinstall bottom closure panel if removed.

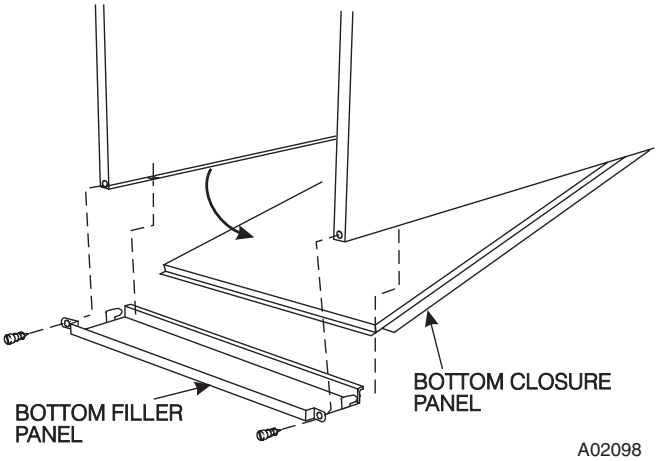

Fig. 9—Removing Bottom Closure Panel

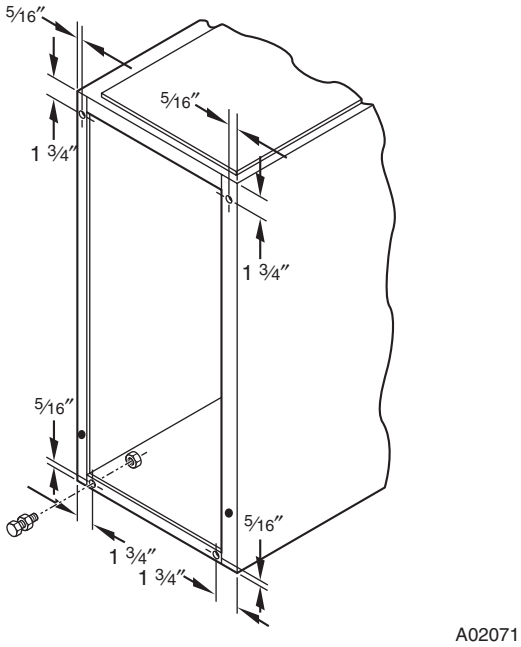

Fig. 10—Leveling Legs

DOWNFLOW INSTALLATION

NOTE: For downflow applications, this furnace is approved for use on combustible flooring when any one of the following 3 accessories are used:

- Special Base, KGASB
- Cased Coil Assembly Part No. CD5 or CK5

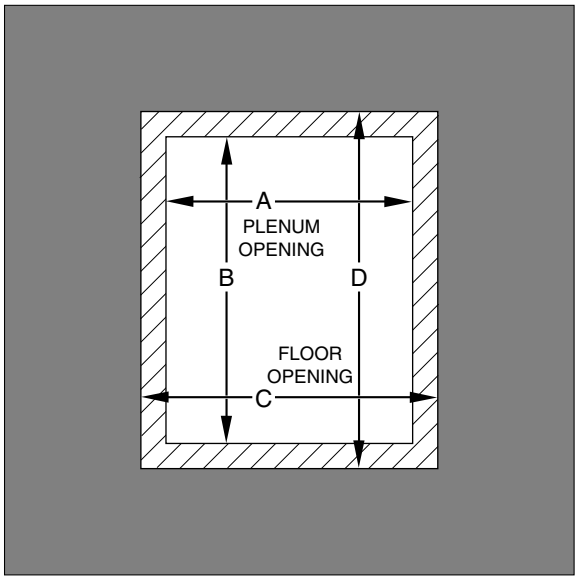

A96283

Fig. 11—Floor and Plenum Opening Dimensions

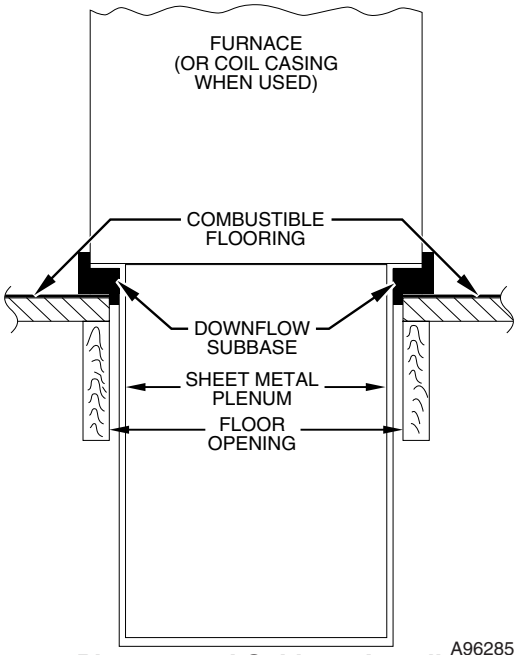

A96285

Fig. 12—Furnace, Plenum, and Subbase Installed on a Combustible Floor

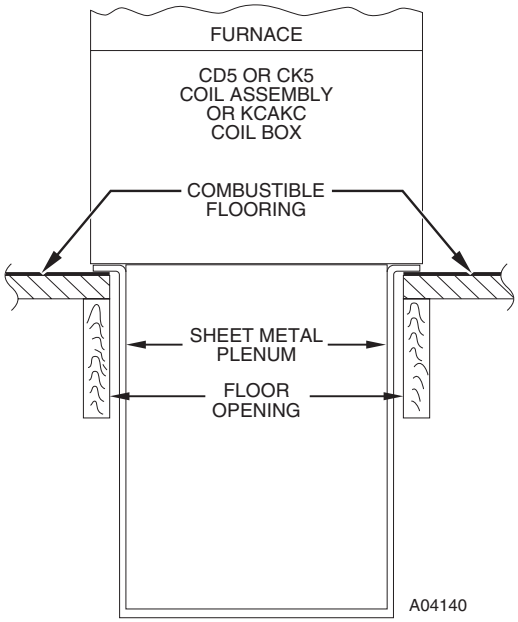

A04140

Fig. 13—Furnace, Plenum, and Coil Assembly or Coil Box Installed on a Combustible Floor

- Coil Box Part No. KCAKC

1. Determine application being installed from Table 4.
2. Construct hole in floor per Table 4 and Fig. 11.
3. Construct plenum to dimensions specified in Table 4 and Fig. 11.
4. If downflow subbase, KGASB is used, install as shown in Fig. 12. If Coil Assembly Part No. CD5 or CK5 or Coil Box Part No. KCAKC is used, install as shown in Fig. 13.

NOTE: It is recommended that the perforated supply-air duct flanges be completely folded over or removed from furnace when installing the furnace on a factory-supplied cased coil or coil box. To remove the supply-air duct flange, use wide duct pliers or hand seamers to bend flange back and forth until it breaks off. Be careful of sharp edges. (See Fig. 14.)

Bottom Return Air Inlet

These furnaces are shipped with bottom closure panel installed in bottom return-air opening. Remove and discard this panel when bottom return air is used. To remove bottom closure panel, perform the following:

1. Tilt or raise furnace and remove 2 screws holding bottom filler panel. (See Fig. 9.)
2. Rotate bottom filler panel downward to release holding tabs.
3. Remove bottom closure panel.
4. Reinstall bottom filler panel and screws.

Table 4—Opening Dimensions (In.)

FURNACE CASING WIDTH	APPLICATION	PLENUM OPENING		FLOOR OPENING	
		A	B	C	D
14–3/16	Upflow Applications on Combustible or Noncombustible Flooring (KGASB subbase not required)	12-11/16	21-5/8	13-5/16	22-1/4
	Downflow Applications on Noncombustible Flooring (KGASB subbase not required)	12-9/16	19	13-3/16	19-5/8
	Downflow applications on combustible flooring **(KGASB subbase required)**	11-13/16	19	13-7/16	20-5/8
	Downflow Applications on Combustible Flooring with CD5 or CK5 Coil Assembly or KCAKC coil box (KGASB subbase not required)	12-5/16	19	13-5/16	20
17–1/2	Upflow Applications on Combustible or Noncombustible Flooring (KGASB subbase not required)	16	21-5/8	16-5/8	22-1/4
	Downflow Applications on Noncombustible Flooring (KGASB subbase not required)	15-7/8	19	16-1/2	19-5/8
	Downflow applications on combustible flooring **(KGASB subbase required)**	15-1/8	19	16-3/4	20-5/8
	Downflow Applications on Combustible Flooring with CD5 or CK5 Coil Assembly or KCAKC coil box (KGASB subbase not required)	15-1/2	19	16-1/2	20
21	Upflow Applications on Combustible or Noncombustible Flooring (KGASB subbase not required)	19-1/2	21-5/8	20-1/8	22-1/4
	Downflow Applications on Noncombustible Flooring (KGASB subbase not required)	19-3/8	19	20	19-5/8
	Downflow applications on combustible flooring **(KGASB subbase required)**	18-5/8	19	20-1/4	20-5/8
	Downflow Applications on Combustible Flooring with CD5 or CK5 Coil Assembly or KCAKC coil box (KGASB subbase not required)	19	19	20	20
24-1/2	Upflow Applications on Combustible or Noncombustible Flooring (KGASB subbase not required)	23	21-1/8	23-5/8	22-1/4
	Downflow Applications on Noncombustible Flooring (KGASB subbase not required)	22-7/8	19	23-1/2	19-5/8
	Downflow applications on Combustible flooring **(KGASB subbase required)**	22-1/8	19	23-3/4	20-5/8
	Downflow Applications on Combustible Flooring with CD5 or CK5 Coil Assembly or KCAKC coil box (KGASB subbase not required)	22-1/2	19	23-1/2	20

HORIZONTAL INSTALLATION

⚠ WARNING

→ **FIRE, EXPLOSION, AND CARBON MONOXIDE POISONING HAZARD**

Failure to follow this warning could result in dangerous operation, serious injury, death, or property damage.

Do not install the furnace on its back or hang furnace with control compartment facing downward. Safety control operation will be adversely affected. Never connect return-air ducts to the back of the furnace.

The furnace can be installed horizontally in an attic or crawlspace on either the left-hand (LH) or right-hand (RH) side. The furnace can be hung from floor joists, rafters or trusses or installed on a non-combustible platform, blocks, bricks or pad.

Suspended Furnace Support

The furnace may be supported under each end with threaded rod, angle iron or metal plumber's strap as shown. (See Fig. 15 and 16.) Secure angle iron to bottom of furnace as shown. Heavy-gauge sheet metal straps (plumber's straps) may be used to suspend the furnace from each bottom corner. To prevent screws from pulling out, use 2 #8 x ¾-in. screws into the side and 2 #8 x ¾-in. screws in the bottom of the furnace casing for each strap. (See Fig. 15 and 16.)

If the screws are attached to ONLY the furnace sides and not the bottom, the straps must be vertical against the furnace sides and not pull away from the furnace sides, so that the strap attachment screws are not in tension (are loaded in shear) for reliable support.

Platform Furnace Support

Construct working platform at location where all required furnace clearances are met. (See Fig. 2 and 17.) For furnaces with 1-in. clearance requirement on side, set furnace on non-combustible blocks, bricks or angle iron. For crawlspace installations, if the furnace is not suspended from the floor joists, the ground underneath furnace must be level and the furnace set on blocks or bricks.

Roll-Out Protection

Provide a minimum 17-3/4″ X 22″ piece of sheet metal for flame roll-out protection in front of burner area for furnaces closer than 12 inches above the combustible deck or suspended furnaces closer than 12 inches to joists. The sheet metal MUST extend underneath the furnace casing by 1 in. with the door removed.

The bottom closure panel on furnaces of widths 17-1/2 in. and larger may be used for flame roll-out protection when bottom of furnace is used for return air connection. See Fig. 17 for proper orientation of roll-out shield.

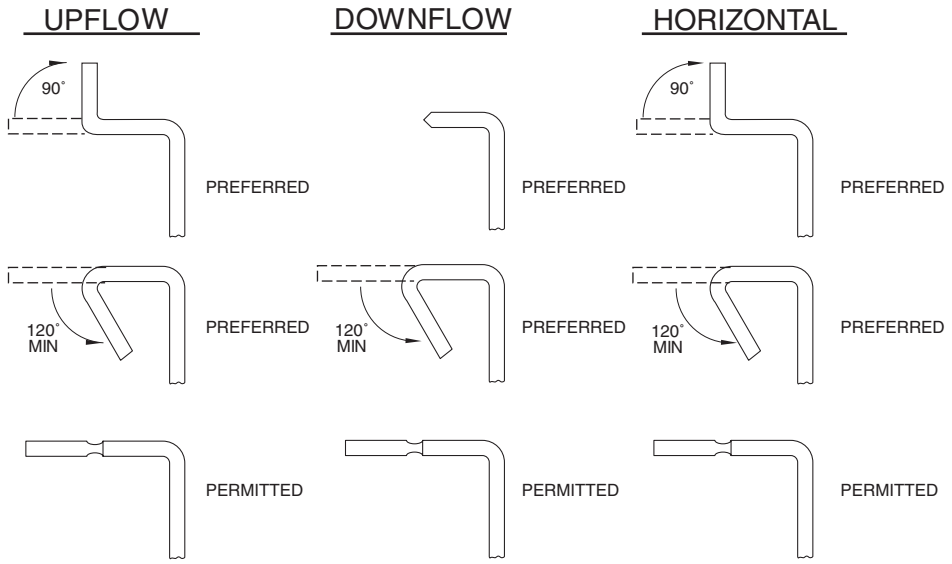

A02329

Fig. 14—Duct Flanges

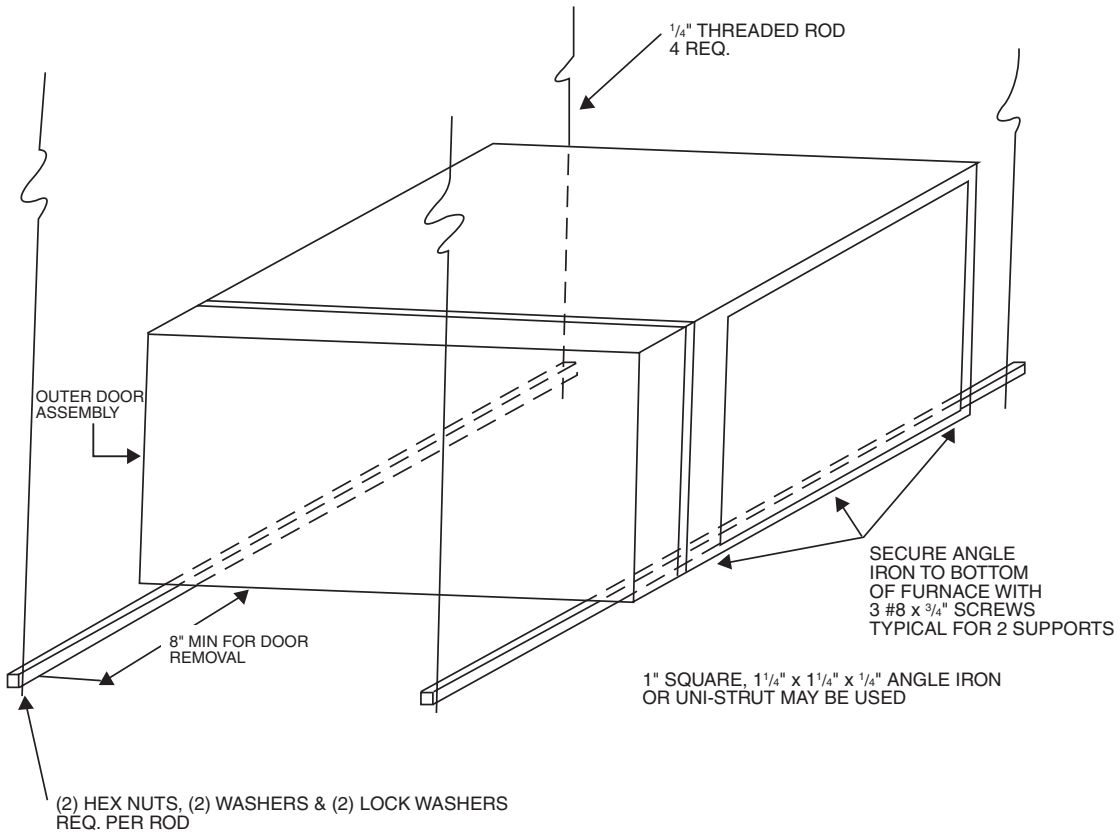

A02345

Fig. 15—Horizontal Unit Suspension

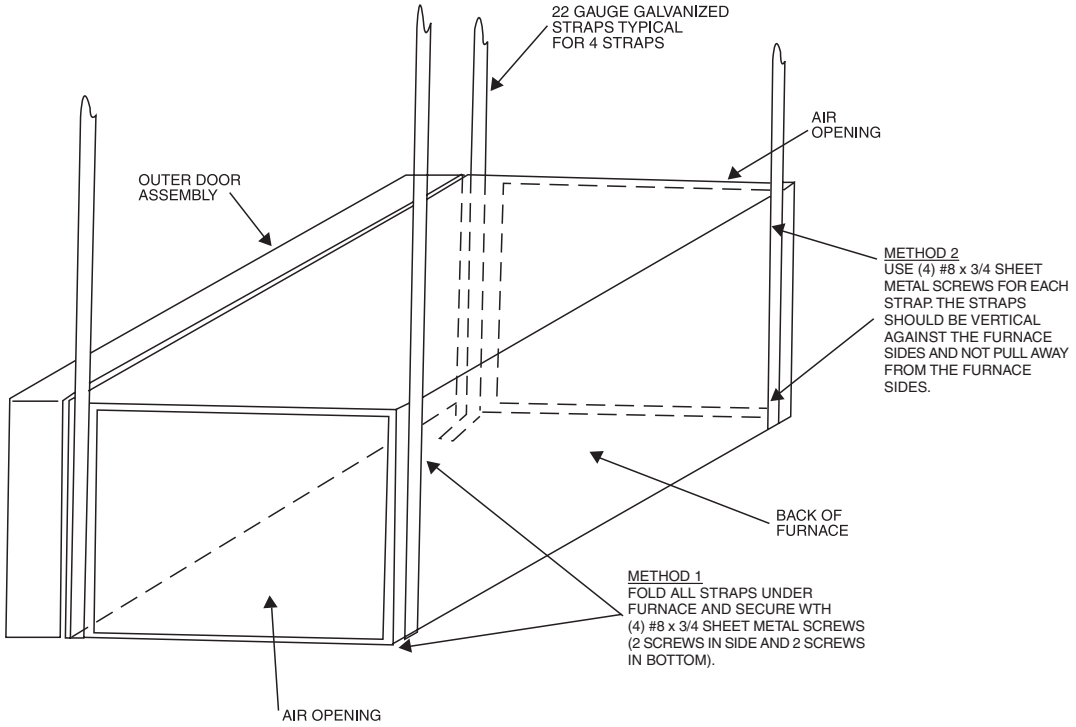

Fig. 16—Horizontal Suspension with Straps

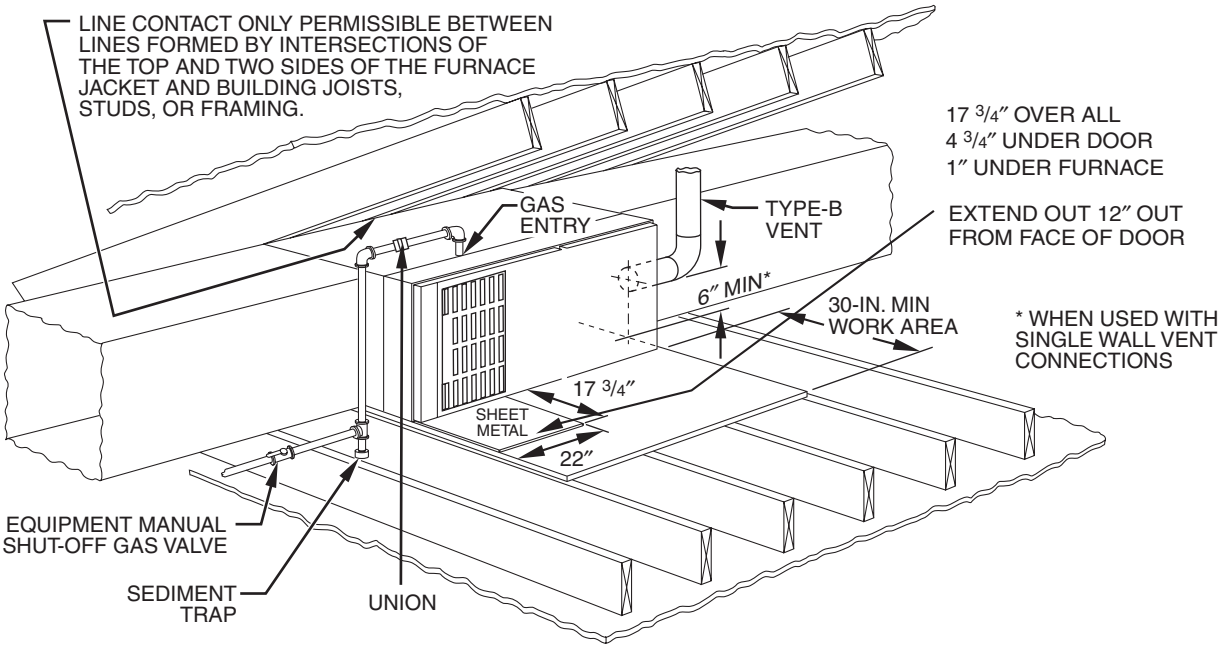

Fig. 17—Typical Attic Installation

Bottom Return Air Inlet

These furnaces are shipped with bottom closure panel installed in bottom return-air opening. Remove and discard this panel when bottom return air is used. To remove bottom closure panel, perform the following:

1. Tilt or raise furnace and remove 2 screws holding bottom filler panel. (See Fig. 9.)
2. Rotate bottom filler panel downward to release holding tabs.
3. Remove bottom closure panel.
4. Reinstall bottom filler panel and screws.

Side Return Air Inlet

These furnaces are shipped with bottom closure panel installed in bottom return-air opening. This panel MUST be in place when side return air inlet(s) are used without a bottom return air inlet.

Not all horizontal furnaces are approved for side return air connections (See Fig. 20.)

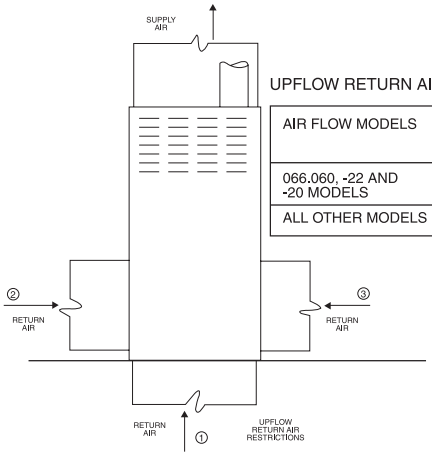

UPFLOW RETURN AIR CONFIGURATIONS AND RESTRICTIONS

AIR FLOW MODELS	RETURN AIR CONNECTION 1 ONLY	RETURN AIR CONNECTION 2 ONLY	RETURN AIR CONNECTION 3 ONLY	RETURN AIR COMBINATIONS OF 1, 2, AND 3
066.060, -22 AND -20 MODELS	YES	YES	YES	YES
ALL OTHER MODELS	YES	YES	YES	YES

A02075

Fig. 18—Upflow Return Air Configurations and Restrictions

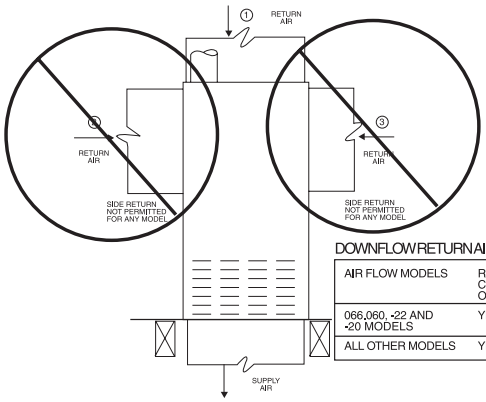

DOWNFLOW RETURN AIR CONFIGURATIONS AND RESTRICTIONS

AIR FLOW MODELS	RETURN AIR CONNECTION 1 ONLY	RETURN AIR CONNECTION 2 ONLY	RETURN AIR CONNECTION 3 ONLY	RETURN AIR COMBINATIONS OF 1, 2, AND 3
066.060, -22 AND -20 MODELS	YES	NO	NO	NO
ALL OTHER MODELS	YES	NO	NO	NO

A02163

Fig. 19—Downflow Return Air Configurations and Restrictions

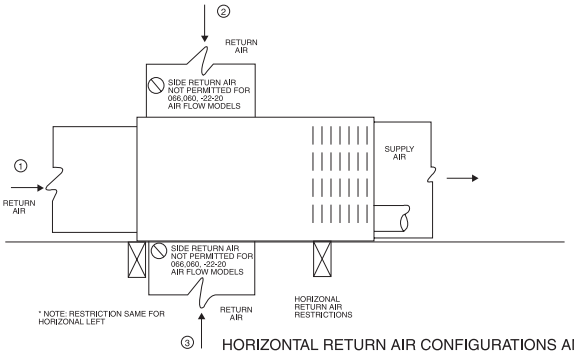

HORIZONTAL RETURN AIR CONFIGURATIONS AND RESTRICTIONS

AIR FLOW MODELS	RETURN AIR CONNECTION 1 ONLY	RETURN AIR CONNECTION 2 ONLY	RETURN AIR CONNECTION 3 ONLY	RETURN AIR COMBINATIONS OF 1, 2, AND 3
066.060, -22 AND -20 MODELS	YES	NO	NO	NO
ALL OTHER MODELS	YES	YES	YES	YES

A02162

Fig. 20—Horizontal Return Air Configurations and Restrictions

FILTER ARRANGEMENT

⚠ WARNING

→ **CARBON MONOXIDE POISONING HAZARD**
Failure to follow this warning could result in personal injury, or death.
Never operate a furnace without a filter or with filter access door removed.

There are no provisions for an internal filter rack in these furnaces. An external filter rack is required.

This furnace is shipped with a factory-supplied Media Filter Cabinet. The Media Filter Cabinet uses either a factory-supplied standard 1-inch filter or 4-inch wide Media Filter which can be purchased separately.

Refer to the instructions supplied with Media Cabinet for assembly and installation options.

AIR DUCTS

General Requirements

The duct system should be designed and sized according to accepted national standards such as those published by: Air Conditioning Contractors Association (ACCA), Sheet Metal and Air Conditioning Contractors National Association (SMACNA) or American Society of Heating, Refrigerating and Air Conditioning Engineers (ASHRAE) or consult *The Air Systems Design Guidelines* reference tables available from your local distributor. The duct system should be sized to handle the required system design CFM at the design external static pressure. The furnace airflow rates are provided in Table 5-Air Delivery-CFM (With Filter).

When a furnace is installed so that the supply ducts carry air circulated by the furnace to areas outside the space containing the furnace, the return air shall also be handled by duct(s) sealed to the furnace casing and terminating outside the space containing the furnace.

Secure ductwork with proper fasteners for type of ductwork used. Seal supply- and return-duct connections to furnace with code approved tape or duct sealer.

NOTE: Flexible connections should be used between ductwork and furnace to prevent transmission of vibration.

Ductwork passing through unconditioned space should be insulated to enhance system performance. When air conditioning is used, a vapor barrier is recommended.

Maintain a 1-in. clearance from combustible materials to supply air ductwork for a distance of 36 in. horizontally from the furnace. See NFPA 90B or local code for further requirements.

Ductwork Acoustical Treatment

NOTE: Metal duct systems that do not have a 90 degree elbow and 10 ft of main duct to the first branch take-off may require internal acoustical lining. As an alternative, fibrous ductwork may be used if constructed and installed in accordance with the latest edition of SMACNA construction standard on fibrous glass ducts. Both acoustical lining and fibrous ductwork shall comply with NFPA 90B as tested by UL Standard 181 for Class 1 Rigid air ducts.

Supply Air Connections

For a furnace not equipped with a cooling coil, the outlet duct shall be provided with a removable access panel. This opening shall be accessible when the furnace is installed and shall be of such a size that the heat exchanger can be viewed for possible openings using light assistance or a probe can be inserted for sampling the air stream. The cover attachment shall prevent leaks.

Upflow and Horizontal Furnaces

Connect supply-air duct to flanges on furnace supply-air outlet. Bend flange upward to 90° with wide duct pliers. (See Fig. 14.) The supply-air duct must be connected to ONLY the furnace supply-outlet-air duct flanges or air conditioning coil casing (when used). DO NOT cut main furnace casing side to attach supply air duct, humidifier, or other accessories. All accessories MUST be connected to duct external to furnace main casing.

NOTE: For horizontal applications, the top most flange may be bent past 90 degrees to allow the evaporator coil to hang on the flange temporarily while the remaining attachment and sealing of the coil are performed.

Downflow Furnaces

Connect supply-air duct to supply-air outlet on furnace. Bend flange inward past 90° with wide duct pliers (See Fig. 14.) The supply-air duct must be connected to ONLY the furnace supply outlet or air conditioning coil casing (when used). When installed on combustible material, supply-air duct must be connected to ONLY the accessory subbase, KGASB0201ALL, or a factory approved air conditioning coil casing. DO NOT cut main furnace casing to attach supply side air duct, humidifier, or other accessories. All accessories MUST be connected to duct external to furnace casing.

Return Air Connections

⚠ WARNING

→ **FIRE HAZARD**
A failure to follow this warning could result in personal injury, or death and/or property damage.

Never connect return-air ducts to the back of the furnace. Follow instructions below.

Downflow Furnaces

The return-air duct must be connected to return-air opening (bottom inlet) as shown in Fig. 3. DO NOT cut into casing sides (left or right). Side opening is permitted for only upflow and certain horizontal furnaces. Bypass humidifier connections should be made at ductwork or coil casing sides exterior to furnace. (See Fig. 19.)

Upflow and Horizontal Furnaces

The return-air duct must be connected to bottom, sides (left or right), or a combination of bottom and side(s) of main furnace casing as shown in Fig. 3. Bypass humidifier may be attached into unused return air side of the furnace casing. (See Fig. 18 and 20.)

Not all horizontal furnace models are approved for side return air connections. (See Fig. 20.)

GAS PIPING

⚠ WARNING

FIRE OR EXPLOSION HAZARD
A failure to follow this warning could result in personal injury, death, and/or property damage.

Never purge a gas line into a combustion chamber. Never test for gas leaks with an open flame. Use a commercially available soap solution made specifically for the detection of leaks to check all connections.

Table 5—Air Delivery - CFM (With Filter)*

FURNACE SIZE	Operating Mode	CFM Airflow Setting	External Static Pressure Range	EXTERNAL STATIC PRESSURE (In. wc)**									
				0.1	0.2	0.3	0.4	0.5	0.6	0.7	0.8	0.9	1.0
036070				AIRFLOW (CFM)									
††	Low Heat	735 (615)†	0 – 0.5	735	735	735	735	725					
	High Heat	1180 (1060)†	0 – 1.0	1160	1165	1175	1180	1180	1180	1180	1180	1180	1175
††	1-1/2 Tons Cooling	525	0 – 0.5‡	525	525	525	525	510					
††	2 Tons Cooling	700	0 – 0.5‡	700	700	700	695	685					
	2-1/2 Tons Cooling	875	0 – 1.0‡	875	875	875	875	875	875	865	855	845	840
	3 Tons Cooling	1050	0 – 1.0‡	1050	1050	1050	1050	1050	1050	1050	1050	1045	1035
	3-1/2 Tons Cooling	1225	0 – 1.0	1205	1215	1225	1225	1225	1225	1225	1225	1225	1210
	Maximum	1400	0 – 1.0	1395	1400	1400	1400	1400	1400	1400	1385	1360	1310
048090													
	Low Heat	985 (825)†	0 – 1.0	950	970	985	985	985	985	985	985	985	980
	High Heat	1210 (1090)†	0 – 1.0	1190	1205	1210	1210	1210	1210	1210	1210	1210	1200
††	1-1/2 Tons Cooling	525	0 – 0.5‡	525	525	525	525	500					
††	2 Tons Cooling	700	0 – 0.5‡	690	695	700	700	690					
	2-1/2 Tons Cooling	875	0 – 1.0‡	830	855	875	875	875	875	870	865	850	820
	3 Tons Cooling	1050	0 – 1.0‡	1005	1025	1040	1050	1050	1050	1050	1050	1050	1050
	3-1/2 Tons Cooling	1225	0 – 1.0‡	1205	1220	1215	1225	1225	1225	1225	1225	1225	1220
	4 Tons Cooling	1400	0 – 1.0	1370	1385	1395	1400	1400	1400	1400	1400	1400	1380
	Maximum	1600	0 – 1.0	1565	1580	1585	1595	1600	1600	1560	1520	1480	1430
060110***													
	Low Heat	1320 (1110)†	0 – 1.0	1275	1295	1315	1320	1320	1320	1320	1320	1320	1315
	High Heat	1475 (1330)†	0 – 1.0	1460	1465	1475	1475	1475	1475	1475	1475	1465	1465
††	2 Tons Cooling	700	0 – 0.5‡	700	700	700	685	660					
††	2-1/2 Tons Cooling	875	0 – 0.5‡	860	875	865	855	840					
††	3 Tons Cooling	1050	0 – 0.5‡	1050	1050	1045	1050	1050					
	3-1/2 Tons Cooling	1225	0 – 1.0‡	1185	1195	1215	1225	1225	1225	1225	1225	1225	1225
	4 Tons Cooling	1400	0 – 1.0‡	1385	1395	1400	1400	1400	1400	1400	1400	1400	1400
	5 Tons Cooling	1750	0 – 1.0‡	1710	1730	1745	1745	1750	1750	1750	1750	1745	1740
	6 Tons Cooling	2100	0 – 1.0	2090	2100	2100	2100	2095	2085	2065	2045	2020	1990
	Maximum	2200	0 – 1.0	2200	2200	2200	2190	2185	2175	2155	2130	2085	2015
066135													
	Low Heat	1700 (1430)†	0 – 1.0	1700	1700	1700	1700	1700	1695	1700	1695	1685	1670
	High Heat	1915 (1725)†	0 – 1.0	1900	1905	1915	1915	1915	1915	1915	1915	1915	1915
††	2 Tons Cooling	700	0 – 0.5‡	700	700	700	700	665					
††	2-1/2 Tons Cooling	875	0 – 0.5‡	870	870	865	865	865					
††	3 Tons Cooling	1050	0 – 0.5‡	1010	1030	1050	1050	1050					
	3-1/2 Tons Cooling	1225	0 – 1.0‡	1155	1180	1200	1210	1220	1225	1225	1225	1225	1225
	4 Tons Cooling	1400	0 – 1.0‡	1395	1400	1400	1400	1400	1400	1400	1390	1375	1355
	5 Tons Cooling	1750	0 – 1.0‡	1740	1750	1750	1750	1735	1740	1735	1730	1715	1700
	6 Tons Cooling	2100	0 – 1.0	2075	2085	2090	2100	2100	2100	2090	2080	2055	2025
	Maximum	2200	0 – 1.0	2180	2195	2200	2200	2200	2200	2185	2165	2140	2095
066155													
	Low Heat	1715 (1440)†	0 – 1.0	1715	1715	1715	1715	1715	1705	1710	1705	1705	1695
	High Heat	1970 (1775)†	0 – 1.0	1955	1965	1965	1970	1970	1970	1970	1970	1970	1960
††	2 Tons Cooling	700	0 – 0.5‡	700	700	700	700	680					
††	2-1/2 Tons Cooling	875	0 – 0.5‡	865	875	875	865	865					
††	3 Tons Cooling	1050	0 – 0.5‡	1015	1020	1035	1045	1050					
	3-1/2 Tons Cooling	1225	0 – 1.0‡	1160	1185	1215	1225	1225	1225	1225	1225	1225	1225
	4 Tons Cooling	1400	0 – 1.0‡	1385	1400	1400	1400	1400	1400	1395	1395	1380	1360
	5 Tons Cooling	1750	0 – 1.0‡	1745	1750	1750	1750	1745	1740	1745	1745	1740	1735
	6 Tons Cooling	2100	0 – 1.0	2055	2070	2080	2085	2095	2100	2100	2100	2090	2065
	Maximum	2200	0 – 1.0	2175	2190	2200	2200	2200	2200	2200	2200	2180	2160

* Actual external static pressure (ESP) can be determined by using the fan laws (CFM^2 is proportional to ESP); such as a system with heating airflow of 1180 CFM at 0.5 ESP would operate at cooling airflow of 1050 CFM at 0.4 ESP and low-heating airflow of 735 CFM at 0.19 ESP.

** A filter is required for each return-air connection to the furnace. Airflow performance includes 1" washable filter media such as contained in factory-authorized accessory filter rack. To determine airflow performance without this filter, assume an additional 0.1" available external static pressure.

† "Comfort mode" airflow values are shown in (parenthesis). "Comfort mode" airflow is selected when the low-heat rise adjustment switch (SW1-3) is OFF and the comfort/efficiency switch (SW1-4) is ON. Furnaces are shipped in this configuration.

‡ Ductwork must be sized for the highest airflow, which is high-heating CFM and is greater than cooling CFM in this case. Note also that heating ESP will be higher than cooling ESP for this system.

†† Operation within the blank areas of the chart is not recommended because high-heat airflow will be above 1.0 ESP.

*** All airflows on 110 size furnace are 5% less on side return only installations.

A04016

⚠ WARNING

FIRE OR EXPLOSION HAZARD

Failure to follow this warning could result in personal injury, death, and/or property damage.

Use proper length of pipe to avoid stress on gas control manifold and a gas leak.

⚠ WARNING

→ **FIRE OR EXPLOSION HAZARD**

Failure to protect gas valve inlet from water and debris could result in death, personal injury and/or property damage. Gas valve inlet and/or inlet pipe must remain capped until gas supply line is permanently installed to protect the valve from moisture and debris. Also, install a sediment trap in the gas supply piping at the inlet to the gas valve.

Gas piping must be installed in accordance with national and local codes. Refer to current edition of NFGC in the U.S. and the NSCNGPIC in Canada.

Installations must be made in accordance with all authorities having jurisdiction. If possible, the gas supply line should be a separate line running directly from meter to furnace.

NOTE: In the state of Massachusetts:

1. Gas supply connections MUST be performed by a licensed plumber or gas fitter.
2. When flexible connectors are used, the maximum length shall not exceed 36 inches (915 mm).
3. When lever handle type manual equipment shutoff valves are used, they shall be T-handle valves.
4. The use of copper tubing for gas piping is NOT approved by the state of Massachusetts.

Refer to Table 6 for recommended gas pipe sizing. Risers must be used to connect to furnace and to meter. Support all gas piping with appropriate straps, hangers, etc. Use a minimum of 1 hanger every 6 ft. Joint compound (pipe dope) should be applied sparingly and only to male threads of joints. Pipe dope must be resistant to the action of propane gas.

⚠ WARNING

FIRE OR EXPLOSION HAZARD

A failure to follow this warning could result in personal injury, death, and/or property damage.

If local codes allow the use of a flexible gas appliance connector, always use a new listed connector. Do not use a connector which has previously served another gas appliance. Black iron pipe shall be installed at the furnace gas control valve and extend a minimum of 2 in. outside the furnace.

⚠ CAUTION

FURNACE DAMAGE HAZARD

Failure to follow this caution may result in furnace damage.

Connect gas pipe to furnace using a backup wrench to avoid damaging gas controls and burner misalignment.

An accessible manual equipment shutoff valve MUST be installed external to furnace casing and within 6 ft of furnace. A 1/8-in. NPT plugged tapping, accessible for test gauge connection, MUST be installed immediately upstream of gas supply connection to furnace and downstream of manual equipment shutoff valve.

Table 6—Maximum Capacity of Pipe*

NOMINAL IRON PIPE SIZE (IN.)	INTERNAL DIAMETER (IN.)	LENGTH OF PIPE (FT)				
		10	20	30	40	50
1/2	0.622	175	120	97	82	73
3/4	0.824	360	250	200	170	151
1	1.049	680	465	375	320	285
1-1/4	1.380	1400	950	770	660	580
1-1/2	1.610	2100	1460	1180	990	900

* Cubic ft of natural gas per hr for gas pressures of 0.5 psig (14–in. wc) or less and a pressure drop of 0.5–in wc (based on a 0.60 specific gravity gas). Ref: Table 12.2 ANSI Z223-2002/NFPA 54-2002.

NOTE: The furnace gas control valve inlet pressure tap connection is suitable to use as test gauge connection providing test pressure DOES NOT exceed maximum 0.5 psig (14-in. wc) stated on gas control valve. (See Fig. 53.)

Some installations require gas entry on right side of furnace (as → viewed in upflow). (See Fig. 21a and 21b.)

Install a sediment trap in riser leading to furnace as shown in Fig → 21c. Connect a capped nipple into lower end of tee. Capped nipple should extend below level of furnace gas controls. Place a ground joint union between furnace gas control valve and exterior manual equipment gas shutoff valve.

A 1/8-in. NPT plugged tapping, accessible for test gauge connection, MUST be installed immediately upstream of gas supply connection to furnace and downstream of manual equipment shutoff valve.

TOP VIEW OF BURNER AND MANIFOLD ASSEMBLY

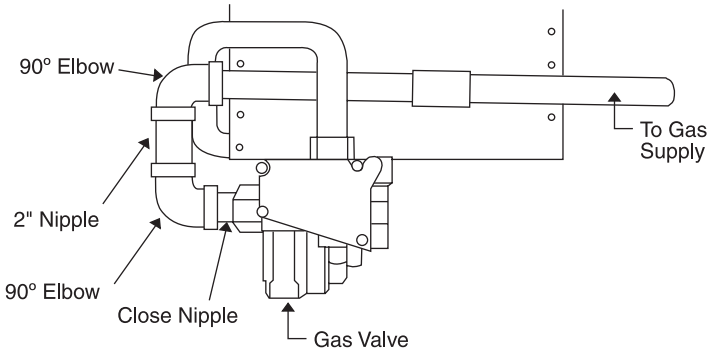

A05028

→ **Fig. 21a—Right Side Gas Entry Example 1**

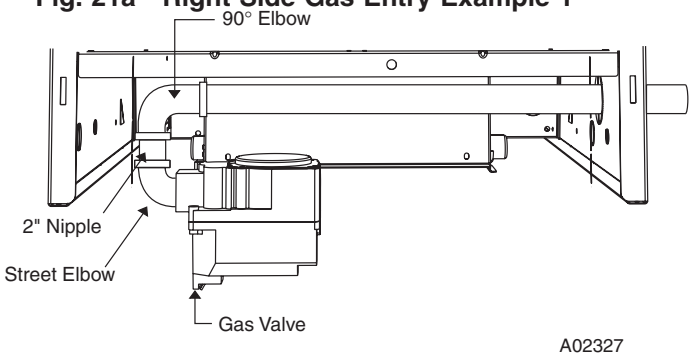

A02327

→ **Fig. 21b—Right Side Gas Entry Example 2**

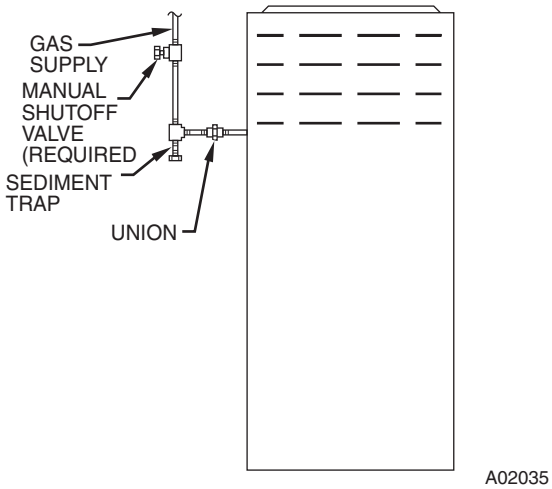

→ **Fig. 21c—Typical Gas Pipe Arrangement**

Piping should be pressure and leak tested in accordance with NFGC in the United States or NSCNGPIC in Canada, local, and national plumbing and gas codes before the furnace has been connected. After all connections have been made, purge lines and check for leakage at furnace prior to operating furnace.

If pressure exceeds 0.5 psig (14-in. wc), gas supply pipe must be disconnected from furnace and capped before and during supply pipe pressure test. If test pressure is equal to or less than 0.5 psig (14-in. wc), turn off electric shutoff switch located on furnace gas control valve and accessible manual equipment shutoff valve before and during supply pipe pressure test. After all connections have been made, purge lines and check for leakage at furnace prior to operating furnace.

The gas supply pressure shall be within the maximum and minimum inlet supply pressures marked on the rating plate with the furnace burners ON and OFF.

ELECTRICAL CONNECTIONS

⚠ WARNING

→ **ELECTRICAL SHOCK HAZARD**
Failure to follow this warning could result in personal injury or death.
Blower access panel door switch opens 115-v power to control. No component operation can occur. Do not bypass or close switch with panel removed.

See Fig. 24 for field wiring diagram showing typical field 115-v wiring. Check all factory and field electrical connections for tightness.

Field-supplied wiring shall conform with the limitations of 63°F (33°C) rise.

⚠ WARNING

→ **ELECTRICAL SHOCK AND FIRE HAZARD**
Failure to follow this warning could result in injury, death, or property damage.
The cabinet MUST have an uninterrupted or unbroken ground according to NEC ANSI/NFPA 70-2002 and Canadian Electrical Code CSA C22.1 or local codes to minimize personal injury if an electrical fault should occur. This may consist of electrical wire, conduit approved for electrical ground or a listed, grounded power cord (where permitted by local code) when installed in accordance with existing electrical codes. Refer to the power cord manufacturer's ratings for proper wire gauge. Do not use gas piping as an electrical ground.

⚠ CAUTION

FURNACE MAY NOT OPERATE
Failure to follow this caution may result in furnace operation stopping and water pipes freezing during cold weather.

Furnace control must be grounded for proper operation or else control will lock out. Control must remain grounded through green/yellow wire routed to gas valve and manifold bracket screw.

115-V WIRING

Verify that the voltage, frequency, and phase correspond to that specified on unit rating plate. Also, check to be sure that service provided by utility is sufficient to handle load imposed by this equipment. Refer to rating plate or Table 7 for equipment electrical specifications.

U.S. Installations: Make all electrical connections in accordance with National Electrical Code (NEC) ANSI/NFPA 70-2002 and any local codes or ordinances that might apply.

Canadian Installations: Make all electrical connections in accordance with Canadian Electrical Code CSA C22.1 or authorities having jurisdiction.

⚠ WARNING

→ **FIRE HAZARD**
Failure to follow this warning could result in injury, death, or property damage.
Do not connect aluminum wire between disconnect switch and furnace. Use only copper wire.

Use a separate, fused branch electrical circuit with a properly sized fuse or circuit breaker for this furnace. See Table 7 for wire size and fuse specifications. A readily accessible means of electrical disconnect must be located within sight of the furnace.

NOTE: Proper polarity must be maintained for 115-v wiring. If polarity is incorrect, control LED status indicator light will flash rapidly and furnace will NOT operate.

J-BOX RELOCATION

NOTE: If factory location of J-Box is acceptable, go to next section (ELECTRICAL CONNECTION to J-Box).

NOTE: On 14″ wide casing models, the J-Box shall not be relocated to other side of furnace casing when the vent pipe is routed within the casing.

1. Remove and save two screws holding J-Box. (See Fig. 22.)

NOTE: The J-Box cover need not be removed from the J-Box in order to move the J-Box. Do NOT remove green ground screw inside J-Box. The ground screw is not threaded into the casing flange and can be lifted out of the clearance hole in casing while swinging the front edge of the J-Box outboard of the casing.

Table 7—Electrical Data

FURNACE SIZE	VOLTS-HERTZ-PHASE	OPERATING VOLTAGE RANGE		MAXIMUM UNIT AMPS	UNIT AMPACITY#	MAXIMUM WIRE LENGTH (FT)‡	MAXIMUM FUSE OR CKT BKR AMPS†	MINIMUM WIRE GAUGE
		Maximum*	Minimum*					
070-12/036070	115-60-1	127	104	9.0	11.99	30	15	14
090-16/048090	115-60-1	127	104	9.6	12.56	29	15	14
110-20/060110	115-60-1	127	104	15.1	19.33	29	20	12
135-22/066135	115-60-1	127	104	14.9	19.13	30	20	12
155-22/066155	115-60-1	127	104	15.0	19.23	29	20	12

* Permissible limits of the voltage range at which the unit operates satisfactorily.
\# Unit ampacity = 125 percent of largest operating component's full load amps plus 100 percent of all other potential operating components' (EAC, humidifier, etc.) full load amps.
† Time-delay type is recommended.
‡ Length shown is as measured 1 way along wire path between furnace and service panel for maximum 2 percent voltage drop.

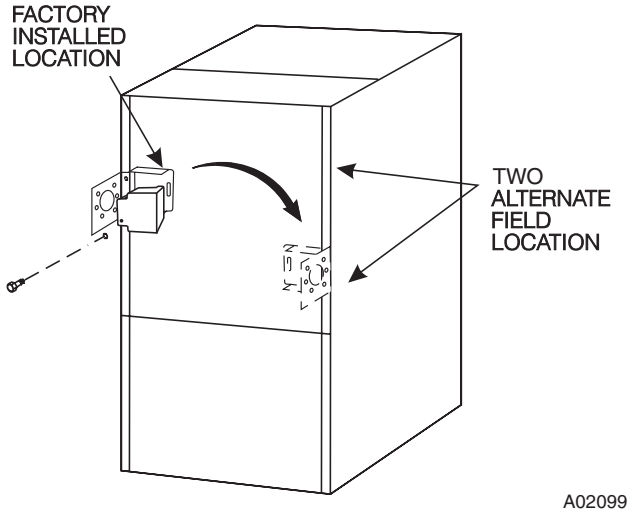

Fig. 22—Relocating J-Box

2. Cut wire tie on loop in furnace wires attached to J-Box.
3. Move J-Box to desired location.
4. Fasten J-Box to casing with the two screws removed in Step 1.
5. Route J-Box wires within furnace away from sharp edges, rotating parts and hot surfaces.

ELECTRICAL CONNECTION TO J-BOX

Field-Supplied Electrical Box on Furnace J-Box Bracket

See Fig. 24.

1. Remove cover from furnace J-Box.
2. Attach electrical box to furnace J-Box bracket with at least two field-supplied screws through holes in electrical box into holes in bracket. Use blunt-nose screws that will not pierce wire insulation.
3. Route furnace power wires through holes in electrical box and J-Box bracket, and make field-wire connections in electrical box. Use best practices (NEC in U.S. and CSA C22.1 in Canada) for wire bushings, strain relief, etc.
4. Route and secure field ground wire to green ground screw on J-Box bracket.
5. Connect line voltage leads as shown in Fig. 24.
6. Reinstall cover to J-Box. Do not pinch wires between cover and bracket.

Electrical Box on Furnace Casing Side

See Fig. 23.

⚠ WARNING

FIRE OR ELECTRICAL SHOCK HAZARD

Failure to follow this warning could result in personal injury, death, or property damage.

If field-supplied manual disconnect switch is to be mounted on furnace casing side, select a location where a drill or fastener cannot damage electrical or gas components.

1. Select and remove a hole knockout in the casing where the electrical box is to be installed.

NOTE: Check that duct on side of furnace will not interfere with installed electrical box.

2. Remove the desired electrical box hole knockout and position the hole in the electrical box over the hole in the furnace casing.
3. Fasten the electrical box to casing by driving two field-supplied screws from inside electrical box into casing steel.

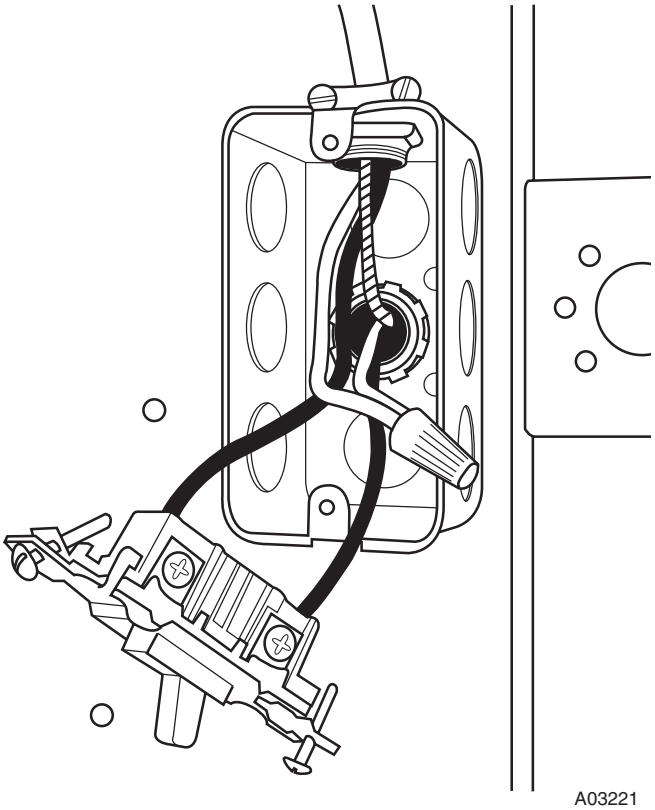

Fig. 23—Field-Supplied Electrical Box on Furnace Casing

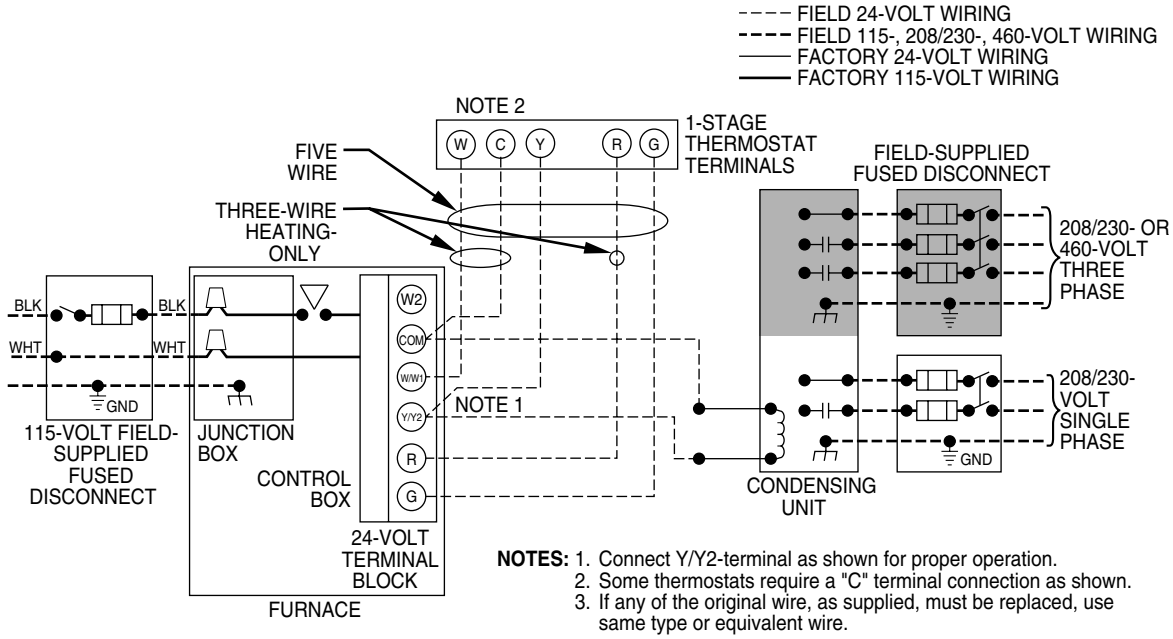

Fig. 24—Field Wiring Diagram

4. Remove and save two screws holding J-Box. (See Fig. 22.)
5. Pull furnace power wires out of 1/2-inch diameter hole in J-Box. Do not loosen wires from strain-relief wire-tie on outside of J-Box.
6. Route furnace power wires through holes in casing and electrical box and into electrical box.
7. Pull field power wires into electrical box.
8. Remove cover from furnace J-Box.
9. Route field ground wire through holes in electrical box and casing, and into furnace J-Box.
10. Reattach furnace J-Box to furnace casing with screws removed in Step 4.
11. Secure field ground wire to J-Box green ground screw.
12. Complete electrical box wiring and installation. Connect line voltage leads as shown in Fig. 24. Use best practices (NEC in U.S. and CSA C22.1 in Canada) for wire bushings, strain relief, etc.
13. Reinstall cover to J-Box. Do not pinch wires between cover and bracket.

POWER CORD INSTALLATION IN FURNACE J-BOX

NOTE: Power cords must be able to handle the electrical requirements listed in Table 7. Refer to power cord manufacturer's listings.

1. Remove cover from J-Box.
2. Route listed power cord through 7/8-inch diameter hole in J-Box.
3. Secure power cord to J-Box bracket with a strain relief bushing or a connector approved for the type of cord used.
4. Secure field ground wire to green ground screw on J-Box bracket.
5. Connect line voltage leads as shown in Fig. 24.
6. Reinstall cover to J-Box. Do not pinch wires between cover and bracket.

BX CABLE INSTALLATION IN FURNACE J-BOX

1. Remove cover from J-Box.
2. Route BX cable into 7/8-inch diameter hole in J-Box.
3. Secure BX cable to J-Box bracket with connectors approved for the type of cable used.
4. Secure field ground wire to green ground screw on J-Box bracket.
5. Connect line voltage leads as shown in Fig. 24.
6. Reinstall cover to J-Box. Do not pinch wires between cover and bracket.

24-V WIRING

Make field 24-v connections at the 24-v terminal strip. (See Fig. 25.) Connect terminal Y/Y2 as shown in Fig. 26-33 for proper cooling operation. Use only AWG No. 18, color-coded, copper thermostat wire.

The 24-v circuit contains an automotive-type, 3-amp fuse located on the control. Any direct shorts during installation, service, or maintenance could cause this fuse to blow. If fuse replacement is required, use ONLY a 3-amp fuse of identical size.

ACCESSORIES

1. Electronic Air Cleaner (EAC)
   Connect an accessory Electronic Air Cleaner (if used) using 1/4-in female quick connect terminals to the two male 1/4-in quick-connect terminals on the control board marked EAC-1 and EAC-2. The terminals are rated for 115VAC, 1.0 amps maximum and are energized during blower motor operation. (See Fig. 25.)
2. Humidifier (HUM)
   Connect an accessory 24 VAC, 0.5 amp maximum humidifer (if used) to the 1/4-in male quick-connect HUM terminal and COM-24V screw terminal on the control board thermostat strip. The HUM terminal is energized when blower is energized in heating. (See Fig. 25.)

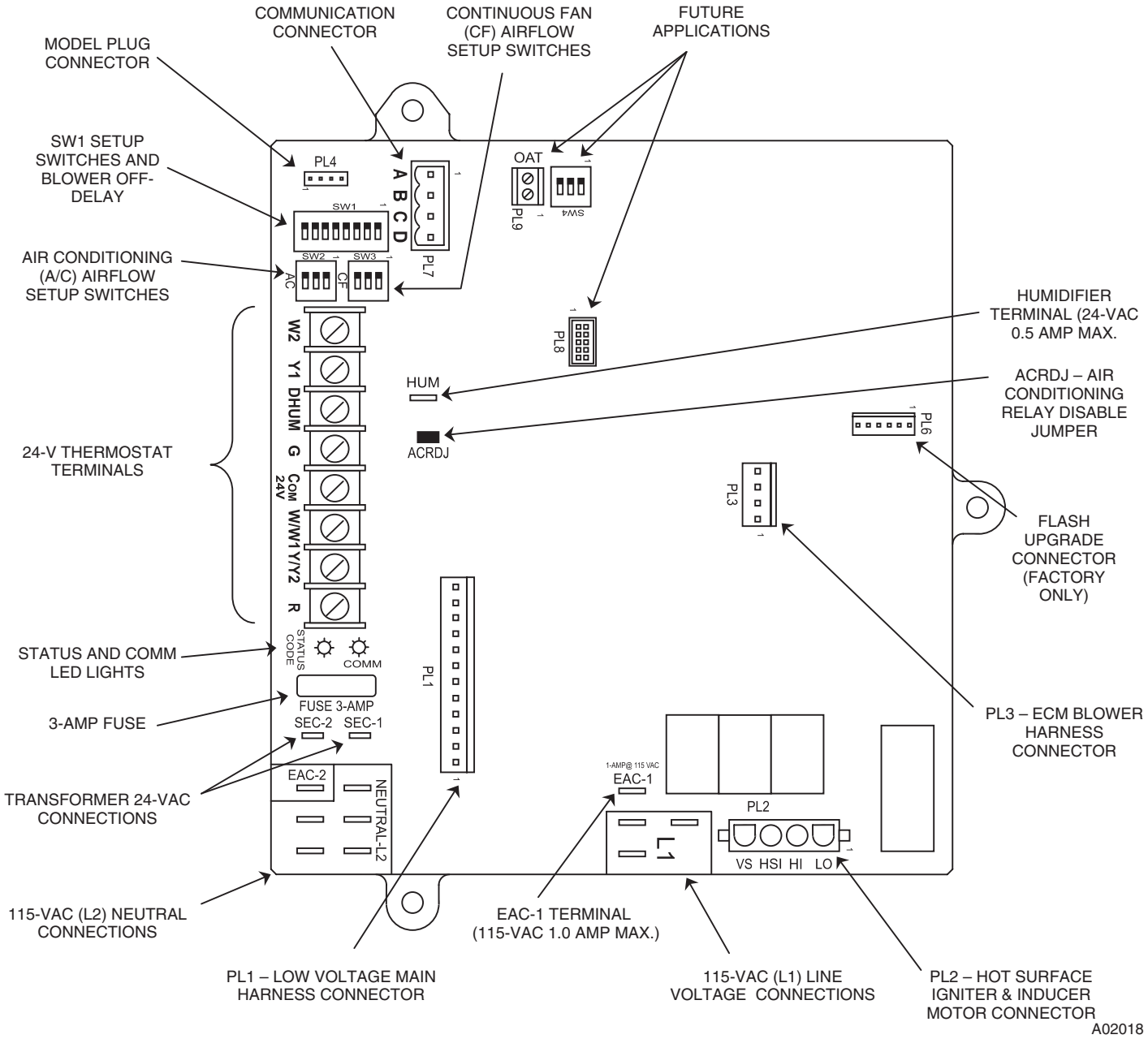

Fig. 25—Variable Speed Furnace Control for ECM Blower Motor

NOTE: DO NOT connect furnace control HUM terminal to HUM (humidifier) terminal on Thermidistat, Zone Controller or similiar device. See Thermidistat™, Zone Controller, thermostat, or controller manufacturer's instructions for proper connection.

VENTING

The furnace shall be connected to a listed factory built chimney or vent, or a clay-tile lined masonry or concrete chimney. Venting into an unlined masonry chimney or concrete chimney is prohibited.

When an existing Category I furnace is removed or replaced, the original venting system, may no longer be sized to properly vent the attached appliances. An improperly sized Category I venting system could cause the formation of condensate in the furnace and vent, leakage of condensate and combustion products, and spillage of combustion products into the living space.

⚠ WARNING

CARBON MONOXIDE POISONING HAZARD

Failure to follow the steps outlined below for each appliance connected to the venting system being placed into operation could result in carbon monoxide poisoning or death.

The following steps shall be followed for each appliance connected to the venting system being placed into operation, while all other appliances connected to the venting system are not in operation:

1. Seal any unused openings in venting system.
2. Inspect the venting system for proper size and horizontal pitch, as required in the National Fuel Gas Code, ANSI Z223.1-2002/NFPA 54 or the CSA B149.1, Natural Gas and Propane Installation Code and these instructions. Determine that there is no blockage or restriction, leakage, corrosion and other deficiencies, which could cause an unsafe condition.
3. As far as practical, close all building doors and windows and all doors between the space in which the appliance(s) connected to the venting system are located and other spaces of the building.
4. Close fireplace dampers.
5. Turn on clothes dryers and any appliance not connected to the venting system. Turn on any exhaust fans, such as range hoods and bathroom exhausts, so they are operating at maximum speed. Do not operate a summer exhaust fan.
6. Follow the lighting instructions. Place the appliance being inspected into operation. Adjust the thermostat so appliance is operating continuously.
7. Test for spillage from draft hood equipped appliances at the draft hood relief opening after 5 minutes of main burner operation. Use the flame of a match or candle.
8. If improper venting is observed during any of the above tests, the venting system must be corrected in accordance with the National Fuel Gas Code, ANSI Z223.1-2002/NFPA 54 and/or CSA B149.1, Natural Gas and Propane Installation Code.
9. After it has been determined that each appliance connected to the venting system properly vents when tested as outlined above, return doors, windows, exhaust fans, fireplace dampers and any other gas-fired burning appliance to their previous conditions of use.

Vent system or vent connectors may need to be resized. Vent systems or vent connectors must be sized to approach minimum size as determined using appropriate table found in the NFGC or NSCNGPIC.

GENERAL VENTING REQUIREMENTS

Follow all safety codes for proper vent sizing and installation requirements, including local building codes, the National Fuel Gas Code ANSI Z223.1-2002/NFPA 54-2002 (NFGC), Parts 10 and 13 in the United States or the *National Standard of Canada, Natural Gas and Propane Installation Code* CSA-B149.1-00 (NSCNGPIC) Section 7 and Appendix C in Canada, the local building codes, and furnace and vent manufacturers' instructions.

These furnaces are design-certified as Category I furnaces in → accordance with ANSI Z21.47-2003/CSA 2.3-2003 and operate with a non-positive vent static pressure to minimize the potential for vent gas leakage. Category I furnaces operate with a flue loss not less than 17 percent to minimize the potential for condensation in the venting system. These furnaces are approved for common venting and multi-story venting with other fan assisted or draft hood equipped appliances in accordance with the NFCG or the NSCNGPIC, the local building codes, and furnace and vent manufacturers' instructions.

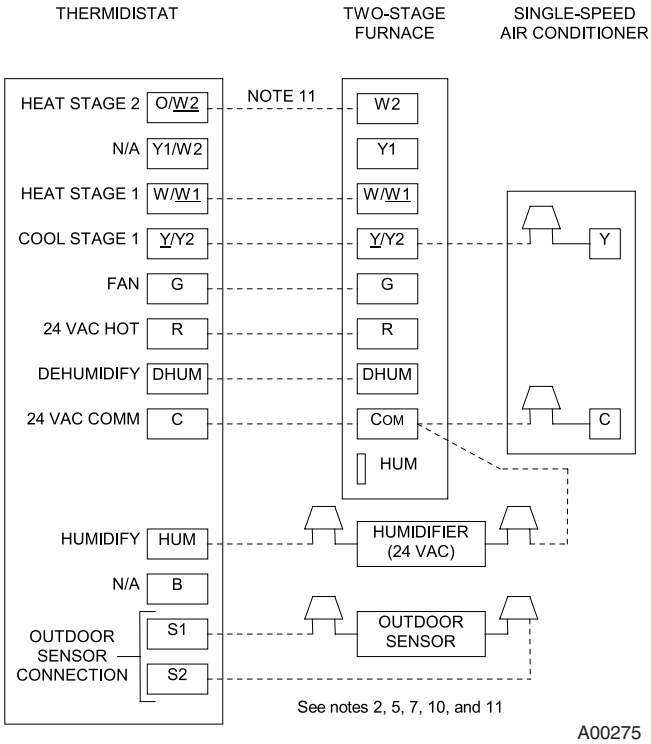

Fig. 26—Two-Stage Furnace with Single-Speed Air Conditioner

The following information and warning must be considered in addition to the requirements defined in the NFGC or the NSCNG-PIC.

⚠ WARNING

→ **CARBON MONOXIDE POISONING HAZARD**

Failure to follow this warning could result in personal injury or death.

Do not bypass the draft safeguard switch, as an unsafe condition could exist which must be corrected.

1. If a vent (common or dedicated) becomes blocked, the furnace will be shut off by the draft safeguard switch located on the vent elbow.
2. Two-stage furnaces require Type B vent connectors outside the casing in all configurations. Single wall vent connector may be used inside the furnace casing with the transition to Type B vent outside the furnace casing. Size the connector so that the FAN-Min vent connector capacity is equal to or lower than the low fire rate of the furnace and the FAN-Max vent connector capacity is equal to or higher than the furnace high fire rate.
3. Do not vent this Category I furnace into a single wall dedicated or common vent. The dedicated or common vent is considered to be the vertical portion of the vent system that terminates outdoors.
4. Vent connectors serving Category I furnaces shall not be connected into any portion of a mechanical draft system operating under positive pressure.
5. In the US: Do not vent this appliance with any solid fuel burning appliance.
   In Canada: Check with the authority having jurisdiction for approval on use with solid fuel burning appliance.

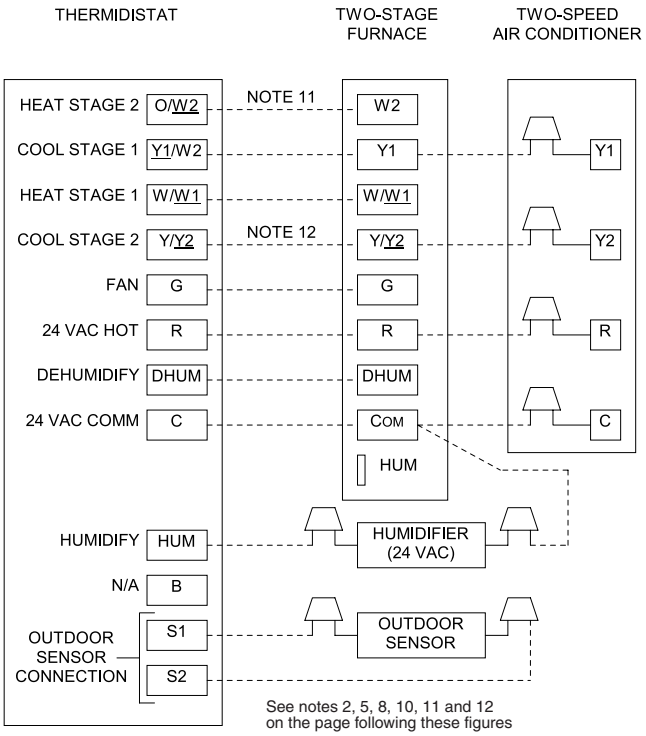

A03179

Fig. 27—Two-Stage Furnace with Two-Speed Air Conditioner

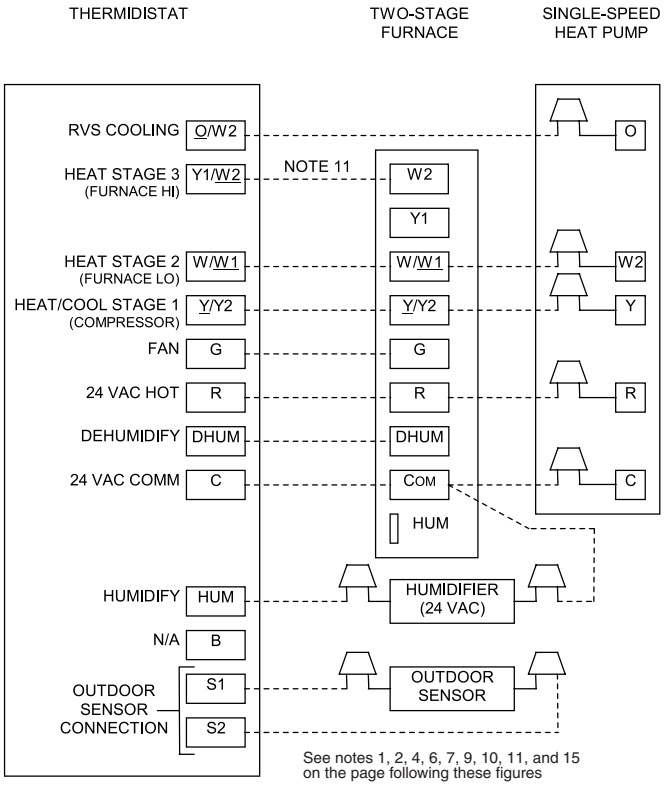

A03180

Fig. 28—Two-Stage Furnace with Single-Speed Heat Pump (Dual Fuel)

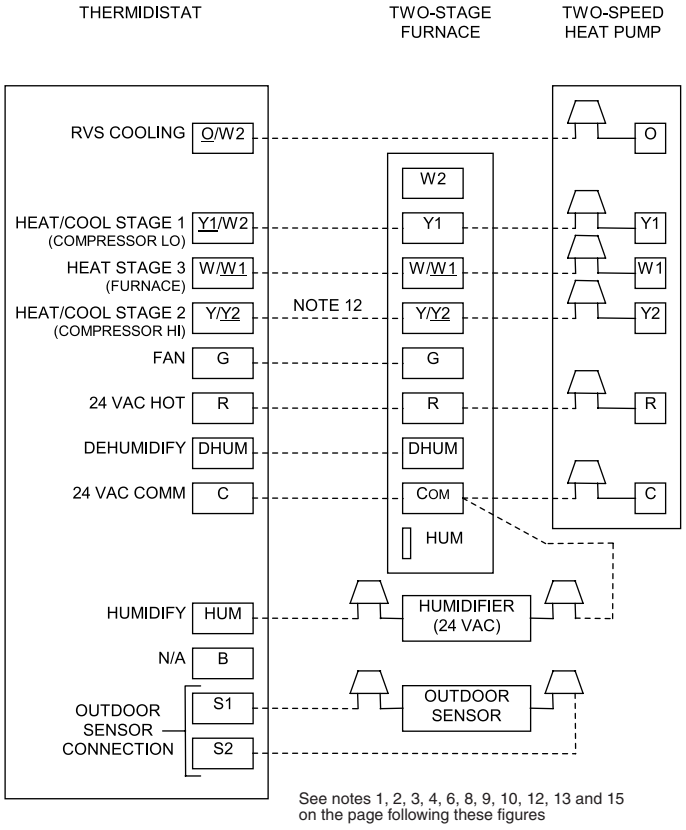

A03178

Fig. 29—Two-Stage Furnace with Two-Speed Heat Pump (Dual Fuel)

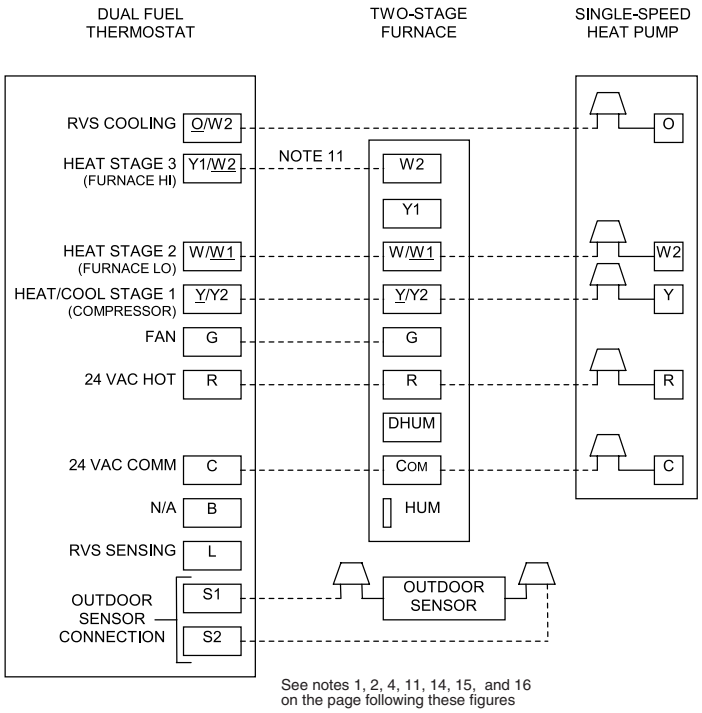

Fig. 30—Dual Fuel Thermostat with Two-Stage Furnace and Single-Speed Heat Pump

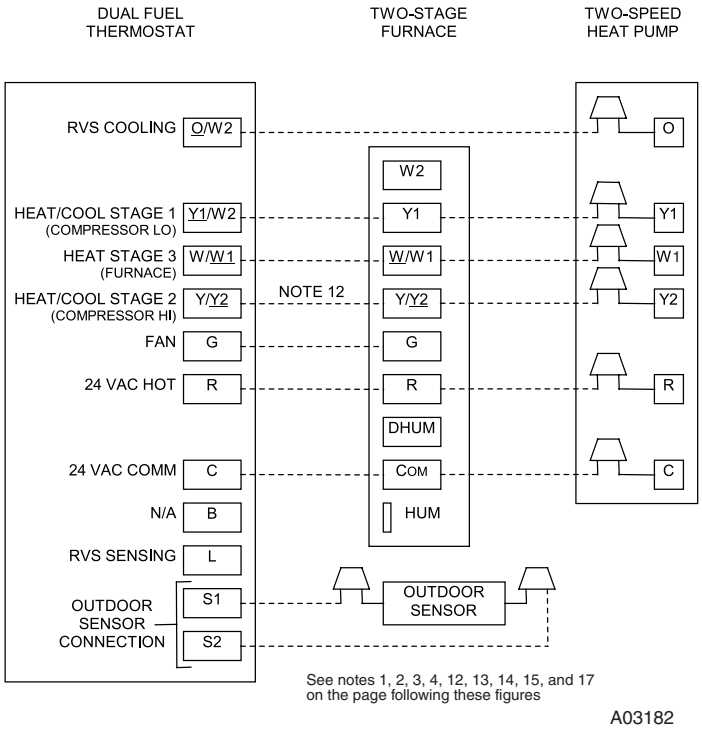

Fig. 31—Dual Fuel Thermostat with Two-Stage Furnace and Two-Speed Heat Pump

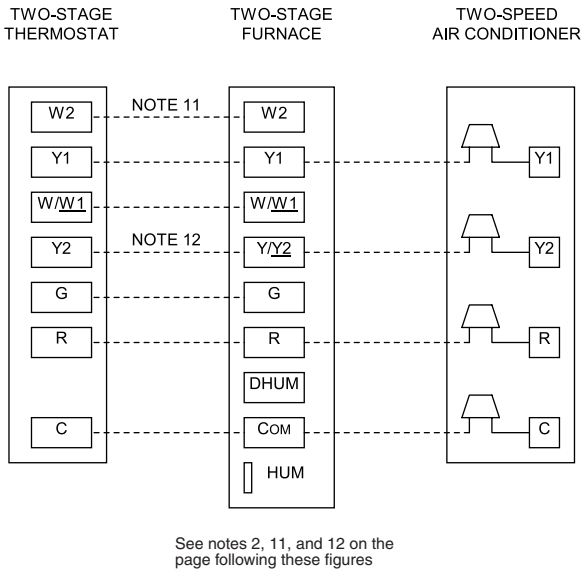

Fig. 32—Two-Stage Thermostat with Two-Stage Furnace and Two-Speed Air Conditioner

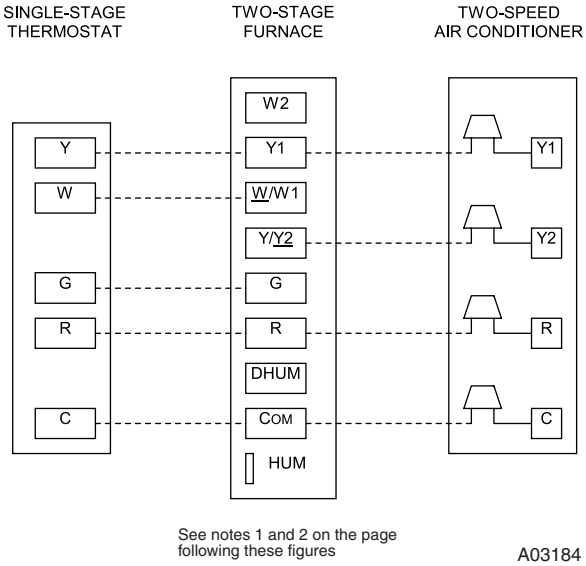

Fig. 33—Single-Stage Thermostat with Two-Stage Furnace and Two-Speed Air Conditioner

NOTES FOR FIGURES 26-33

1. Heat pump **MUST** have a high pressure switch for dual fuel applications.
2. Refer to outdoor equipment Installation Instructions for additional information and setup procedure.
3. If the heat pump date code is 1501E or earlier, select the ″ZONE″ position on the two-speed heat pump control. Heat pumps having date codes 1601E and later do not have or require a ″ZONE″ selection.
4. Outdoor Air Temperature Sensor must be attached in all dual fuel applications.
5. Dip switch No. 1 on Thermidistat should be set in **OFF** position for air conditioner installations. This is factory default.
6. Dip switch No. 1 on Thermidistat should be set in **ON** position for heat pump installations.
7. Dip switch No. 2 on Thermidistat should be set in **OFF** position for single-speed compressor operation. This is factory default.
8. Dip switch No. 2 on Thermidistat should be set in **ON** position for two-speed compressor operation.
9. Configuration Option No. 10 “Dual Fuel Selection” must be turned **ON** in all dual fuel applications.
10. **NO** connection should be made to the furnace HUM terminal when using a Thermidistat.
11. Optional connection: If wire is connected, dip switch SW1-2 on furnace control should be set in ON position to allow Thermidistat/Thermostat to control furnace staging.
12. Optional connection: If wire is connected, ACRDJ jumper on furnace control should be removed to allow Thermidistat/Thermostat to control outdoor unit staging.
13. Furnace must control its own high-stage heating operation via furnace control algorithm.
14. The RVS Sensing terminal “L” should not be connected. This is internally used to sense defrost operation.
15. **DO NOT SELECT** the “FURNACE INTERFACE” or “BALANCE POINT” option on the two-speed heat pump control board. This is controlled internally by the Thermidistat/Dual Fuel Thermostat.
16. Dip switch D on Dual Fuel Thermostat should be set in **OFF** position for single-speed compressor operation. This is factory default.
17. Dip switch D on Dual Fuel Thermostat should be set in **ON** position for two-speed compressor operation.

CHIMNEY INSPECTION CHART

For additional requirements refer to the National Fuel Gas Code NFPA 54/ANSI Z223.1 and ANSI/NFPA 211 Chimneys, Fireplaces, Vents, and Solid Fuel Burning Appliances in the U.S.A. or to the Canadian installation Code CSA-B149.1 in Canada.

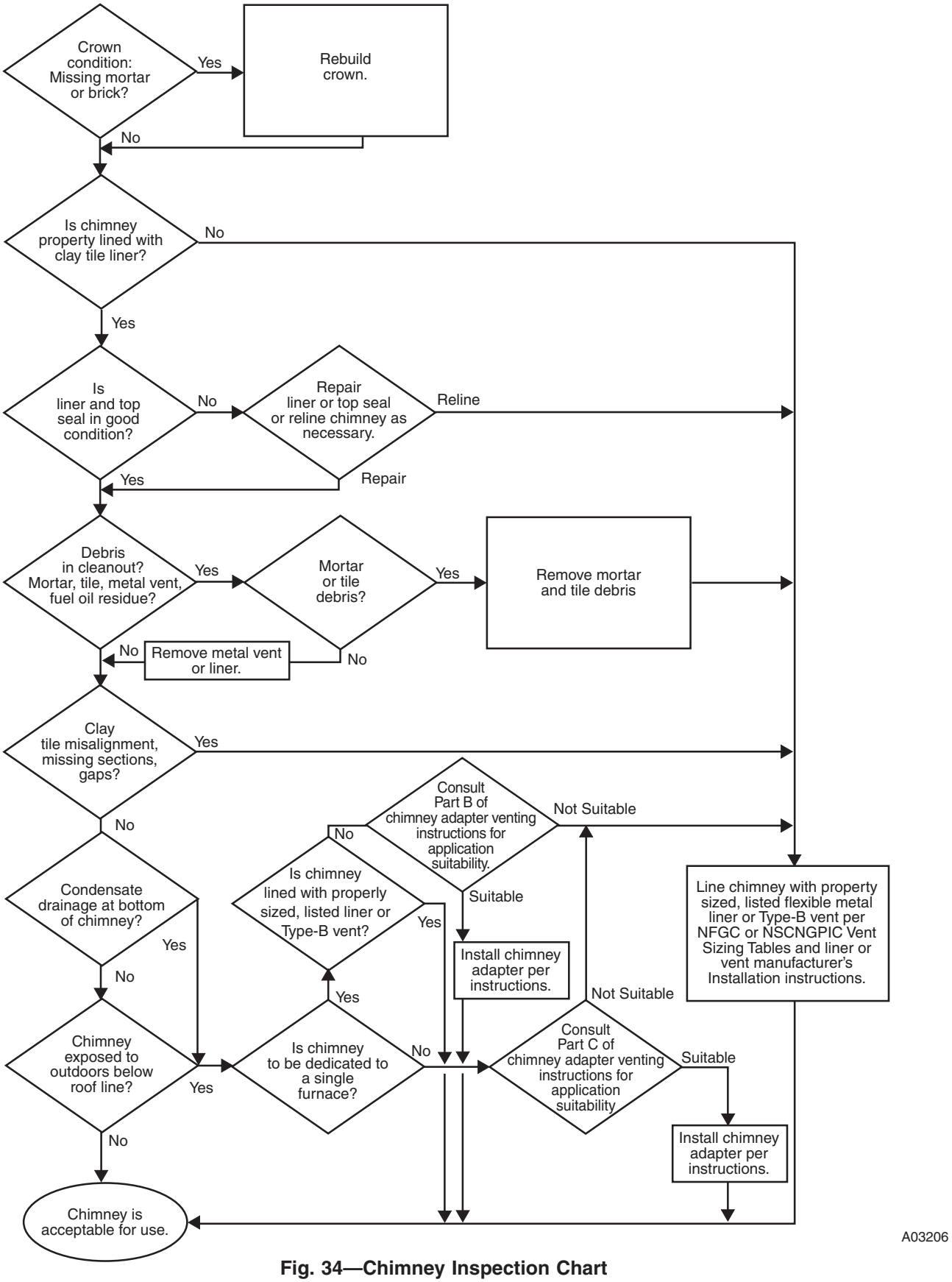

Fig. 34—Chimney Inspection Chart

6. Category I furnaces must be vented vertically or nearly vertically unless equipped with a listed mechanical venter. See SIDEWALL VENTING section.
7. Do not vent this appliance into an unlined masonry chimney. Refer to Chimney Inspection Chart, Fig. 34.

MASONRY CHIMNEY REQUIREMENTS

NOTE: These furnaces are CSA design-certified for use in exterior tile-lined masonry chimneys with a factory accessory Chimney Adapter Kit. Refer to the furnace rating plate for correct kit usage. The Chimney Adapter Kits are for use with ONLY furnaces having a Chimney Adapter Kit number marked on the furnace rating plate.

If a clay tile-lined masonry chimney is being used and it is exposed to the outdoors below the roof line, relining might be required. Chimneys shall conform to the Standard for Chimneys, Fireplaces, Vents, and Soild Fuel Burning Appliances ANSI/NFPA 211-2003 in the United States and to a Provincial or Territorial Building Code in Canada (in its absence, the National Building Code of Canada) and must be in good condition.

U.S.A.-Refer to Sections 13.1.9 and 13.2.20 of the NFGC or the authority having jurisdiction to determine whether relining is required. If relining is required, use a properly sized listed metal liner, Type-B vent, or a listed alternative venting design.

NOTE: See the NFGC 13.1.9 and 13.2.20 regarding alternative venting design and the exception, which cover installations such as our Chimney Adapter Kits KGACA02014FC and KGACA02015FC, which are listed for use with these furnaces.

The Chimney Adapter Kit is a listed alternative venting system for these furnaces. See the kit instructions for complete details.

Canada (and U.S.A.)-This furnace is permitted to be vented into a clay tile-lined masonry chimney that is exposed to the outdoors below the roof line, provided:

1. Vent connector is Type-B double-wall, and
2. This furnace is common vented with at least 1 draft hood-equipped appliance, and
3. The combined appliance input rating is less than the maximum capacity given in Table A, and
4. The input rating of each space heating appliance is greater than the minimum input rating given in Table B for the local 99% Winter Design Temperature. Chimneys having internal areas greater than 38 square inches require furnace input ratings greater than the input ratings of these furnaces. See footnote at bottom of Table B, and
5. The authority having jurisdiction approves.

If all of these conditions cannot be met, an alternative venting design shall be used, such as the listed chimney adapter kit with a furnace listed for use with the kit, a listed chimney-lining system, or a Type-B common vent.

Inspections before the sale and at the time of installation will determine the acceptability of the chimney or the need for repair and/or (re)lining. Refer to the Fig. 34 to perform a chimney inspection. If the inspection of a previously used tile-lined chimney:

a. Shows signs of vent gas condensation, the chimney should be relined in accordance with local codes and the authority having jurisdiction. The chimney should be relined with a listed metal liner, Type-B vent, or a listed chimney adapter kit shall be used to reduce condensation. If a condensate drain is required by local code, refer to the NFGC, Section 10.9 for additional information on condensate drains.
b. Indicates the chimney exceeds the maximum permissible size in the tables, the chimney should be rebuilt or relined to conform to the requirements of the equipment being installed and the authority having jurisdiction.

A chimney without a clay tile liner, which is otherwise in good condition, shall be rebuilt to conform to ANSI/NFPA 211 or be lined with a UL listed (ULC listed in Canada) metal liner or UL listed Type-B vent. Relining with a listed metal liner or Type-B vent is considered to be a vent-in-a-chase.

If a metal liner or Type-B vent is used to line a chimney, no other appliance shall be vented into the annular space between the chimney and the metal liner.

Exterior Masonry Chimney FAN + NAT Installations with Type-B Double-Wall Vent Connectors ©NFPA & AGA

Table A—Combined Appliance Maximum Input Rating in Thousands of BTU per Hour

VENT HEIGHT (FT)	INTERNAL AREA OF CHIMNEY (SQ. IN.)			
	12	19	28	38
6	74	119	178	257
8	80	130	193	279
10	84	138	207	299
15	NR	152	233	334
20	NR	NR	250	368
30	NR	NR	NR	404

APPLIANCE APPLICATION REQUIREMENTS

Appliance operation has a significant impact on the performance of the venting system. If the appliances are sized, installed, adjusted, and operated properly, the venting system and/or the appliances should not suffer from condensation and corrosion. The venting system and all appliances shall be installed in accordance with applicable listings, standards, and codes.

The furnace should be sized to provide 100 percent of the design heating load requirement plus any margin that occurs because of furnace model size capacity increments. Heating load estimates can be made using approved methods available from Air Conditioning Contractors of America (Manual J); American Society of Heating, Refrigerating, and Air-Conditioning Engineers; or other approved engineering methods. Excessive oversizing of the furnace could cause the furnace and/or vent to fail prematurely.

When a metal vent or metal liner is used, the vent must be in good condition and be installed in accordance with the vent manufacturer's instructions.

To prevent condensation in the furnace and vent system, the following precautions must be observed:

1. The return-air temperature must be at least 60°F db except for brief periods of time during warm-up from setback at no lower than 55°F db or during initial start-up from a standby condition.
2. Adjust the gas input rate per the installation instructions. Low gas input rate causes low vent gas temperatures, causing condensation and corrosion in the furnace and/or venting system. Derating is permitted only for altitudes above 2000 ft.
3. Adjust the air temperature rise to the midpoint of the rise range or slightly above. Low air temperature rise can cause low vent gas temperature and potential for condensation problems.
4. Set the thermostat heat anticipator or cycle rate to reduce short cycling.

Table B—Minimum Alowable Input Rating of Space-Heating Appliance in Thousands of BTU per Hour

	VENT HEIGHT (FT)	INTERNAL AREA OF CHIMNEY (SQ. IN.)			
		12	19	28	38
Local 99% Winter Design Temperature: 17 to 26 degrees F*					
17 to 26°F	6	0	55	99	141
	8	52	74	111	154
	10	NR	90	125	169
	15	NR	NR	167	212
	20	NR	NR	212	258
	30	NR	NR	NR	362
Local 99% Winter Design Temperature: 5 to 16 degrees F*					
5 to 16 F	6	NR	78	121	166
	8	NR	94	135	182
	10	NR	111	149	198
	15	NR	NR	193	247
	20	NR	NR	NR	293
	30	NR	NR	NR	377
Local 99% Winter Design Temperature: -10 to 4 degrees F*					
-10 to 4 F	6	NR	NR	145	196
	8	NR	NR	159	213
	10	NR	NR	175	231
	15	NR	NR	NR	283
	20	NR	NR	NR	333
	30	NR	NR	NR	NR
Local 99% Winter Design Temperature: -11 degrees F or lower*					
-11 F or lower		Not recommended for any vent configuration			

*The 99% Winter Design Dry-Bulb (db) temperatures are found in the 1993 ASHRAE Fundamentals Handbook, Chapter 24, Table 1 (United States) and 2 (Canada), or use the 99.6% heating db temperatures found in the 1997 or 2001 ASHRAE Fundamentals Handbook, Climatic Design Information chapter, Table 1A (United States) and 2A (Canada).

Air for combustion must not be contaminated by halogen compounds which include chlorides, fluorides, bromides, and iodides. These compounds are found in many common home products such as detergent, paint, glue, aerosol spray, bleach, cleaning solvent, salt, and air freshener, and can cause corrosion of furnaces and vents. Avoid using such products in the combustion-air supply. Furnace use during construction of the building could cause the furnace to be exposed to halogen compounds, causing premature failure of the furnace or venting system due to corrosion.

Vent dampers on any appliance connected to the common vent can cause condensation and corrosion in the venting system. Do not use vent dampers on appliances common vented with this furnace.

ADDITIONAL VENTING REQUIREMENTS

A 4″ round vent elbow is supplied with the furnace. A 5-inch or 6-inch vent connector may be required for some model furnaces. A field-supplied 4-inch to 5-inch or 4-inch to 6-inch sheet metal increaser fitting is required when 5-inch or 6-inch vent connector is used. See Fig. 35-47, Venting Orientation for approved vent configurations.

NOTE: Vent connector length for connector sizing starts at furnace vent elbow. The 4-inch vent elbow is shipped for upflow configuration and may be rotated for other positions. Remove the 3 screws that secure vent elbow to furnace, rotate furnace vent elbow to position desired, re-install screws. The factory-supplied vent elbow does NOT count as part of the number of vent connector elbows.

The vent connector can exit the door through one of 5 locations on the door.

1. Attach the single wall vent connector to the furnace vent elbow, and fasten the vent connector to the vent elbow with at least two field-supplied, corrosion-resistant, sheet metal screws located 180° apart.

NOTE: An accessory flue extension KGAFE0112UPH is available to extend from the furnace elbow to outside the furnace casing. If flue extension is used, fasten the flue extension to the vent elbow with at least two field-supplied, corrosion-resistant, sheet metal screws located 180° apart. Fasten the vent connector to the flue extension with at least two field-supplied, corrosion-resistant sheet metal screws located 180° apart.

2. Vent the furnace with the appropriate connector as shown in Fig 35-47.

⚠ CAUTION

→ **CUT HAZARD**

Failure to follow this caution may result in personal injury.

Sheet metal parts may have sharp edges or burrs. Use care and wear appropriate protective clothing, safety glasses and gloves when handling parts, and servicing furnaces.

3. Orient the door to determine the correct location of the door knockout to be removed.
4. Use aviation-type tin snips to remove the correct U-shaped knockout in door.

→ **NOTE:** A number of techniques can be used to remove these knockouts as seen in Fig. 48 through 52. The knockout in the bottom of the door is unique due to its flanging and is not easily removed by first cutting the two tie points at the edge of the door, using aviation-type tin snips. (See Fig. 48.) A sharp blow to the rounded end of the knockout (See Fig. 49.) will separate more tie points and allow the knockout to be pulled loose. (See Fig. 50.) Remove any burrs and sharp edges.

For the rectangular J-box knockout, use tin snips along the door edge and use a sharp blow with a hammer to remove the knockout. Remove any burrs and sharp edges.

For the knockouts in the other locations on the door (top and sides), tin snips can also be used along the door edges; however, the preferred method is to use a hammer and screwdriver to strike a sharp blow (See Fig. 51.) directly to the knockout tie points or use a hammer in the upper left corner of the desired knockout. (See Fig. 52.) Remove any burrs and sharp edges.

→ **NOTE:** If a knockout does not come out after two sharp blows, pull and snip as needed to remove the knockout. Additional blows may cause damage to the door.

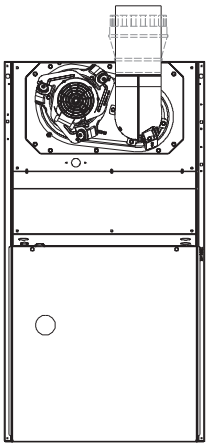

SEE NOTES: 1,2,4,7,8,9
on the page following
these figures

A03208

Fig. 35—Upflow Application-Vent Elbow Up

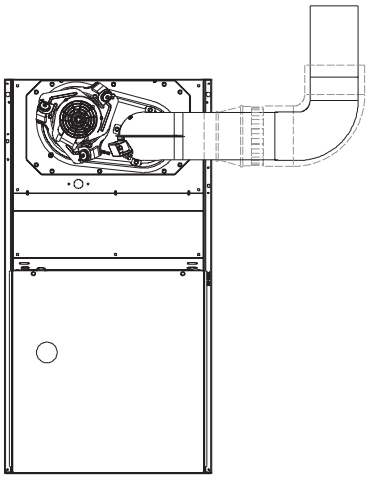

SEE NOTES: 1,2,3,4,7,8,9
on the pages following
these figures

A03209

Fig. 36—Upflow Application-Vent Elbow Right

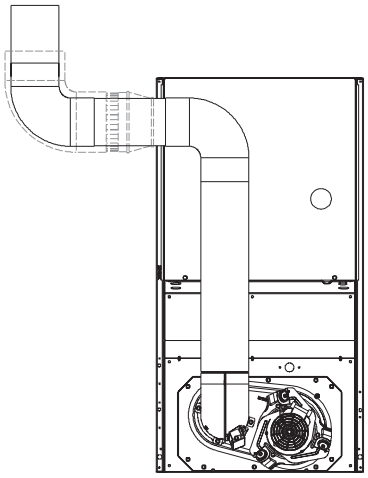

SEE NOTES:1,2,3,4,5,7,8,9
on the page following
these figures

A03210

Fig. 37—Downflow Application-Vent Elbow Up then Left

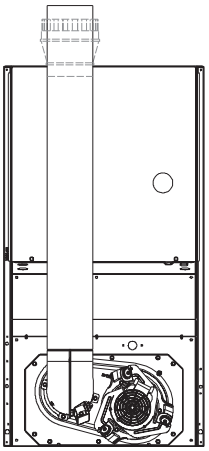

SEE NOTES: 1,2,4,5,7,8,9
on the page following
these figures

A03211

Fig. 38—Downflow Application-Vent Elbow Up

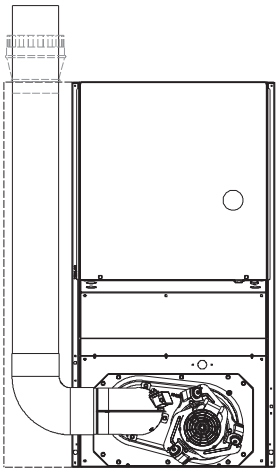

SEE NOTES: 1,2,4,5,6,7,8,9,10
on the page following these figures

A03207

Fig. 39—Downflow Application-Vent Elbow Left then Up

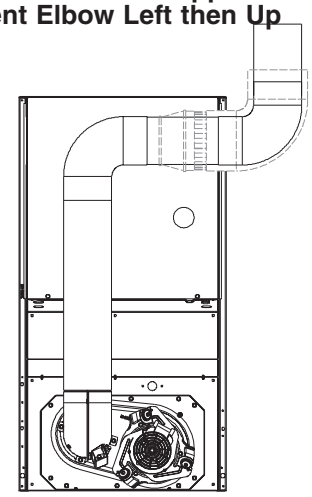

SEE NOTES:1,2,3,4,5,7,8,9
on the page following
these figures.

A03212

Fig. 40—Downflow Application-Vent Elbow Up then Right

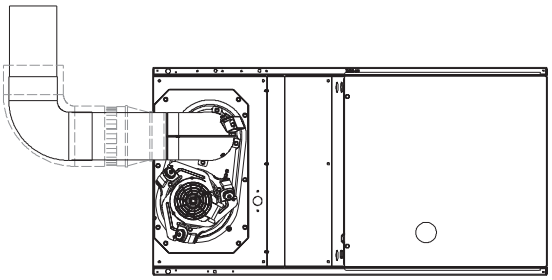

SEE NOTES: 1,2,4,7,8,9 on the page following these figures

A03213

Fig. 41—Horizontal Left Application-Vent Elbow Left

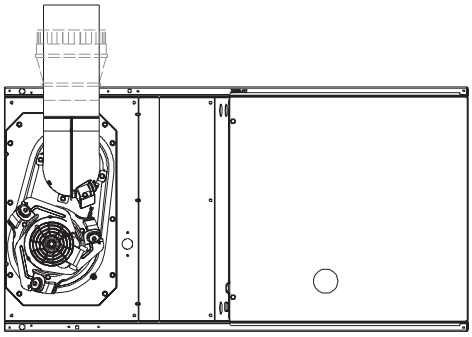

SEE NOTES: 1,2,4,5,7,8,9 on the page following these figures

A03215

Fig. 43—Horizontal Left Application-Vent Elbow Up

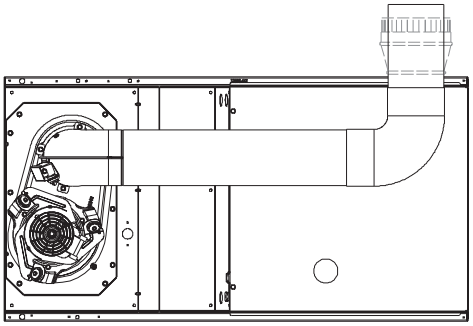

SEE NOTES: 1,2,4,5,7,8,9 on the page following these figures

A03214

Fig. 42—Horizontal Left Application-Vent Elbow Right then Up

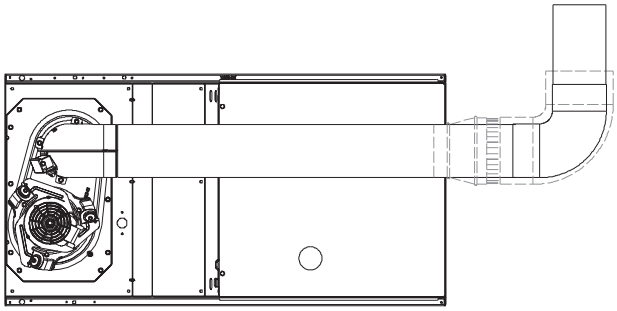

SEE NOTES: 1,2,4,5,7,8,9 on the page following these figures

A03216

Fig. 44—Horizontal Left Application-Vent Elbow Right

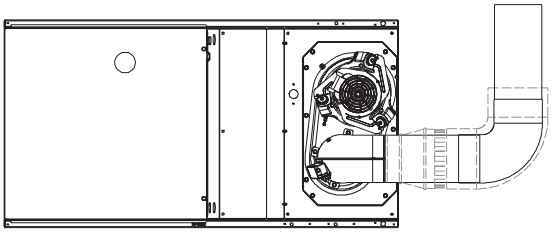

SEE NOTES: 1,2,4,7,8,9 on the page following these figures

A03218

Fig. 45—Horizontal Right Application-Vent Elbow Right

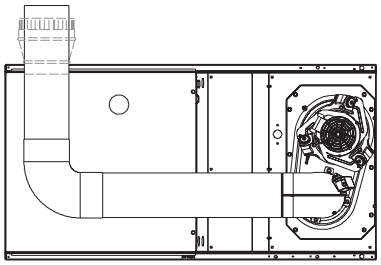

SEE NOTES: 1,2,4,5,7,8,9 on the page following these figures

A03219

Fig. 46—Horizontal Right Application-Vent Elbow Left then Up

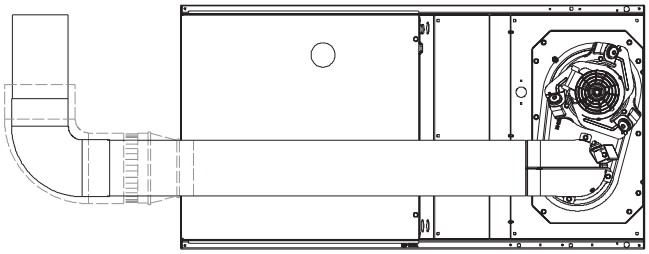

SEE NOTES: 1,2,4,5,7,8,9

A02068

Fig. 47—Horizontal Right Application-Vent Elbow Left

Caution!! For the following applications, use the minimum vertical heights as specified below

For all other applications, follow exclusively the National Fuel Gas Code

FURNACE ORIENTATION	VENT ORIENTATION	FURNACE INPUT(BTU/HR)	MINIMUM VENT DIAMETER (IN.)*	MINIMUM VERTICAL VENT HEIGHT (FT)**
Downflow	Vent elbow left, then up Fig. 37	154,000 132,000 110,000(036/-12 only)	5	12
Horizontal Left	Vent elbow right, then up Fig. 40	154,000 132,000	5	7
Horizontal Left	Vent Elbow up Fig. 41	154,000 132,000	5	7
Horizontal Left	Vent elbow right Fig. 42	154,000	5	7
Downflow	Vent elbow up then left Fig. 35	110,000 (036/-12 only)	5	10
Downflow	Vent elbow up, then right Fig. 38	110,000 (036/-12 only)	5	10

NOTE: All vent configurations must also meet National Fuel Gas Code venting requirements NFGC.
*4 in. inside casing or vent guard
**Including 4 in. vent section(s)

Venting Notes for Fig. 35-47

1. For common vent, vent connector sizing and vent material:
   United States--use the NFGC
   Canada--use the NSCNGPIC
2. Immediately increase to 5-inch or 6-inch vent connector outside furnace casing when 5-inch vent connector is required, refer to Note 1 above.
3. Side outlet vent for upflow and downflow installations must use Type B vent immediately after exiting the furnace, except when KGAVG0101DFG, Downflow Vent Guard Kit, is used in the downflow position.
4. Type-B vent where required, refer to Note 1 above.
5. Four-inch single-wall (26 ga. min.) vent must be used inside furnace casing and when the KGAVG0101DFG Downflow Vent Guard Kit is used external to the furnace.
6. Accessory Downflow Vent Guard Kit, KGAVG0101DFG required in downflow installations with lower vent configuration.
7. Chimney Adapter Kit may be required for exterior masonry chimney applications. Refer to Chimney Adapter Kit, KGACA02014FC or KGACA02015FC, for sizing and complete application details.
8. Secure vent connector to furnace elbow with (2) corrosion-resistant sheet metal screws, spaced approximately 180° apart.
9. Secure all other single wall vent connector joints with (3) corrosion resistant screws spaced approximately 120° apart. Secure Type-B vent connectors per vent connector manufacturer's recommendations.
10. The total height of the vent and connector shall be at least seven feet for the 154,000 Btuh gas input rate model when installed in a downflow application with furnace elbow turned to left side with the connector elbow outside furnace casing pointing upward. (See Fig. 39.)

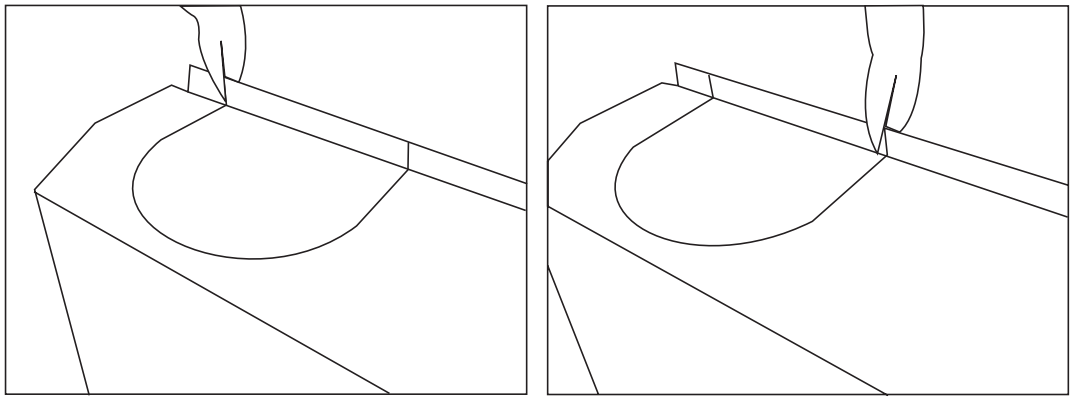

A04127

Fig. 48—Using Tin Snips to Cut Tie Points

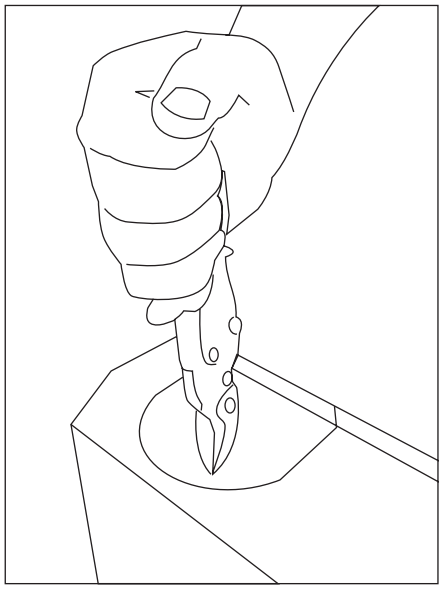

A04128

Fig. 49—Rounded End of Knockout

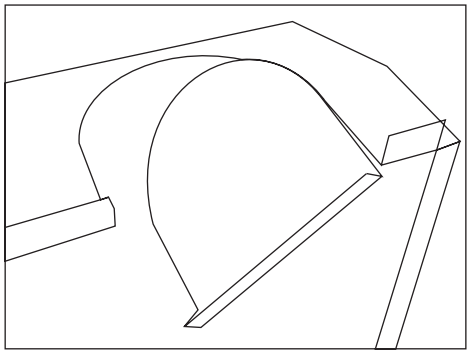

A04129

Fig. 50—Knockout Pulled Loose

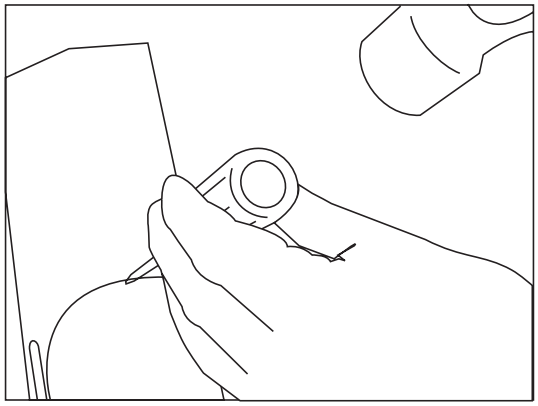

A04130

Fig. 51—Hammer and Screwdriver Used for Knockout

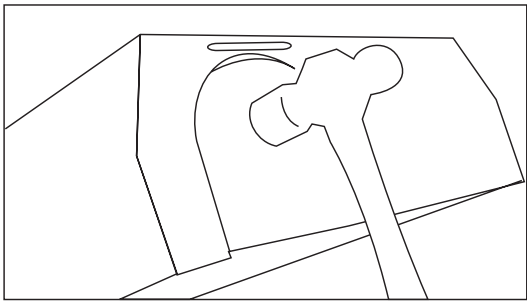

A04131

Fig. 52—Remove Knockout with Hammer

⚠ CAUTION

→ **BURN HAZARD**
Failure to follow this caution may result in personal injury.

Hot vent pipe is within reach of small children when installed in downflow position. Vent pipe is HOT and will cause personal injury.
See the following instruction.

An accessory Vent Guard Kit, KGAVG0101DFG is REQUIRED for downflow applications for use where the vent exits through the lower portion of the furnace casing door. Refer to the Vent Guard Kit Instructions for complete details.

The horizontal portion of the venting system shall slope upwards not less than 1/4-in. per linear ft (21 mm/m) from the furnace to the vent and shall be rigidly supported every 5 ft or less with metal hangers or straps to ensure there is no movement after installation.

SIDEWALL VENTING

This furnace is not approved for direct sidewall horizontal venting.

In the U.S.: Per section 10.3.4 of the NFGC, any listed mechanical venter may be used, when approved by the authority having jurisdiction.

In Canada: Per section 7.24.2 of the NSCNGPIC, any listed mechanical venter may be used, when approved by the authority having jurisdiction.

Select the listed mechanical venter to match the Btuh input of the furnace being vented. Follow all manufacturer's installation requirements for venting and termination included with the listed mechanical venter.

START-UP, ADJUSTMENT, AND SAFETY CHECK

Step 1—General

⚠ WARNING

→ **FIRE HAZARD**
Failure to follow this warning could result in property damage, personal injury or death.
This furnace is equipped with manual reset limit switches in the gas control area. The switches open and shut off power to the gas valve, if a flame rollout or overheating condition occurs in the gas control area. DO NOT bypass the switches. Correct problem before resetting the switches.

1. Maintain 115-v wiring and ground. Improper polarity will result in rapid flashing LED and no furnace operation.
2. Make thermostat wire connections at the 24-v terminal block on the furnace control. Failure to make proper connections will result in improper operation. (See Fig. 24.)
3. Gas supply pressure to the furnace must be greater than 4.5-in. wc (0.16 psig) but not exceed 14-in. wc (0.5 psig).

Table 8—Furnace Setup Switch Description

SETUP SWITCH NO.	SWITCH NAME	NORMAL POSITION	DESCRIPTION OF USE
SW1-1	Status Code Recovery	OFF	Turn ON to retrieve up to 7 stored status codes for troubleshooting assistance when R thermostat lead is disconnected.
SW1-2	Adaptive Heat Mode	OFF	Allows 2-stage operation with a single stage thermostat. Turn ON when using 2 stage thermostat to allow Low Heat operation when R to W/W1 closes and High Heat operation when R to W/W1 and W2 close.
SW1-3	Low Heat Rise Adjust	OFF	Turn ON to increase Low Heat airflow by 18 percent. This compensates for increased return air temperature caused with bypass humidifier.
SW1-4	Comfort/Efficiency Adjustment	ON	Turn ON to decrease Low Heat airflow by 16 percent and High Heat airflow 10 percent for maximum comfort.
SW1-5	CFM per ton adjust	OFF	Turn ON for 400 CFM per ton. Turn OFF for 350 CFM per ton.
SW1-6	Component Self-Test	OFF	Turn ON to initiate Component Self-Test for troubleshooting assistance when R thermostat lead is disconnected. Turn OFF when Self-Test is completed.
SW1-7	Blower OFF delay	ON or OFF	Control blower Off Delay time. Used in conjunction with SW1-8. See Table 10.
SW1-8	Blower OFF delay	ON or OFF	Control blower Off Delay time. Used in conjunction with SW1-7. See Table 10.

⚠ CAUTION

→ **CUT HAZARD**
Failure to follow this caution may result in personal injury.

Sheet metal parts may have sharp edges or burrs. Use care and wear appropriate protective clothing, safety glasses and gloves when handling parts, and servicing furnaces.

4. Check all manual-reset switches for continuity.
5. Replace blower compartment door. Door must be in place to operate furnace.
6. Setup switch descriptions
   The variable speed furnace control has DIP switches to select thermostat staging, blower off delay timings, air flow selection and other operational or service related functions. (See Fig. 25, 57 and Table 8.)

Step 2—Start-Up Procedures

⚠ WARNING

FIRE AND EXPLOSION HAZARD
Failure to follow this warning could cause property damage, personal injury, or death.
Never purge a line into a combustion chamber. Never use matches, candles, flame, or other sources of ignition for the purpose of checking leakage. Use a soap-and-water solution to check for leakage.

1. Purge gas lines after all connections have been made.
2. Check gas lines for leaks.

⚠ WARNING

ELECTRICAL SHOCK HAZARD
Failure to follow this warning could result in personal injury, or death.
Blower access door switch opens 115-v power to control. No component operation can occur unless switch is closed. Caution must be taken when manually closing this switch for service purposes.

3. To Begin Component Self-Test:
   Remove Blower Access Door. Disconnect the thermostat R lead from furnace control board. Manually close blower door switch. Turn Setup DIP switch SW1-6 ON. (See Fig. 25, 57 and Table 8.)

NOTE: The furnace control allows all components, except the gas valve, to be run for short period of time. This feature helps diagnose a system problem in case of a component failure. Component test feature will not operate if any thermostat signal is present at the control.

Refer to service label attached to furnace or See Fig. 56.

Component test sequence is as follows:

a. Inducer motor starts on high-speed and continues to run until Step d. of component test sequence.
b. Hot surface igniter is energized for 15 sec., then off.
c. Blower motor operates for 15 sec.
d. Inducer motor goes to low-speed for 10 sec., then stops.
e. After component test is completed, one or more status codes (11, 25, or 41) will flash. See component test section of service label (Fig. 56) in furnace for explanation of status codes.

NOTE: To repeat component test, turn setup switch SW1-6 OFF, then back ON.

4. Turn setup DIP switch SW1-6 OFF. Reconnect R lead to furnace control board, release blower door switch and reinstall blower access door.
5. Operate furnace per instruction on inner door.
6. Verify furnace shut down by lowering thermostat setting below room temperature.
7. Verify furnace restarts by raising thermostat setting above room temperature.

Step 3—Adjustments

⚠ WARNING

→ **FIRE HAZARD**
Failure to follow this warning could result in property damage, personal injury, and death.
DO NOT bottom out gas valve regulator adjusting screw. This can result in unregulated manifold pressure and result in excess overfire and heat exchanger failures.

⚠ CAUTION

→ **FURNACE DAMAGE HAZARD**
Failure to follow this caution may result in reduced furnace life, property damage.
DO NOT redrill orifices. Improper drilling (burrs, out-of-round holes, etc.) can cause excessive burner noise and misdirection of burner flames. This can result in flame impingement of heat exchangers, causing failures. (See Fig. 54.)

Furnace gas input rate on rating plate is for installations at altitudes up to 2000 ft. Furnace input rate must be within ±2 percent of furnace rating plate input. For altitudes above 5500 ft., a field-supplied high altitude pressure switch is required.

1. Determine the correct gas input rate.
   In the U.S.A.:
   The input rating for altitudes above 2,000 ft. must be reduced by 4 percent for each 1,000 ft. above sea level.
   For installations below 2000 ft., refer to the unit rating plate. For installations above 2000 ft., multiply the input on the rating plate by the de-rate multiplier in Table 9 for the correct input rate.
   In Canada:
   The input rating for altitudes from 2,000 to 4,500 ft above sea level must be derated 10 percent by an authorized Gas Conversion Station or Dealer.
   To determine correct input rate for altitude, see example and use 0.90 as derate multiplier factor.

EXAMPLE:
88,000 BTUH INPUT FURNACE INSTALLED AT 4300 FT.

Furnace Input Rate at Sea Level	X	Derate Multiplier Factor	=	Furnace Input Rate at Installation Altitude
88,000	X	0.90	=	79,200

2. Determine the correct orifice and manifold pressure adjustment. All models in all positions except Low NOx models in downflow and horizontal positions use Table 12 (22,000 Btuh per burner.) Low NOx models in downflow or horizontal positions must use Table 13 (21,000 Btuh per burner.)
   See input listed on rating plate.
   a. Obtain average yearly gas heat value (at installed altitude) from local gas supplier.
   b. Obtain average yearly gas specific gravity from local gas supplier.
   c. Find installation altitude in Table 12 or 13.
   d. Find closest natural gas heat value and specific gravity in Table 12 or 13.

Table 9–Altitude Derate Multiplier for U.S.A.

ALTITUDE (FT)	PERCENT OF DERATE	DERATE MULTIPLIER FACTOR*
0–2000	0	1.00
2001–3000	8–12	0.90
3001–4000	12–16	0.86
4001–5000	16–20	0.82
5001–6000	20–24	0.78
6001–7000	24–28	0.74
7001–8000	28–32	0.70
8001–9000	32–36	0.66
9001–10,000	36–40	0.62

* Derate multiplier factors are based on midpoint altitude for altitude range.

Table 10—Blower Off Delay Setup Switch

DESIRED HEATING MODE BLOWER OFF DELAY (SEC.)	SETUP SWITCH (SW-7 AND -8) POSITION	
	SW1-7	SW1-8
90	OFF	OFF
120	ON	OFF
150	OFF	ON
180	ON	ON

   e. Follow heat value and specific gravity lines to point of intersection to find orifice size and low-and high-heat manifold pressure settings for proper operation.
   f. Check and verify burner orifice size in furnace. NEVER ASSUME ORIFICE SIZE. ALWAYS CHECK AND VERIFY.
   g. Replace orifice with correct size, if required by Table 12 or 13. Use only factory-supplied orifices. See EXAMPLE 2.

EXAMPLE 2: (0–2000 ft altitude)
For 22,000 Btuh per burner application use Table 12.
Heating value = 1000 Btu/cu ft
Specific gravity = 0.62
Therefore: Orifice No. 43*
Manifold pressure: 3.7-in. wc for high-heat
1.6-in. wc for low-heat
* Furnace is shipped with No. 43 orifices. In this example all main burner orifices are the correct size and do not need to be changed to obtain proper input rate.

3. Adjust manifold pressure to obtain low fire input rate. (See Fig. 53.)
   a. Turn gas valve ON/OFF switch to OFF.
   b. Remove manifold pressure tap plug from gas valve.
   c. Connect a water column manometer or similar device to manifold pressure tap.
   d. Turn gas valve ON/OFF switch to ON.
   e. Move setup SW1–2 on furnace control to ON position to lock furnace in low-heat operation. (See Table 8 and Fig. 25.)
   f. Manually close blower door switch.
   g. Jumper R and W/W1 thermostat connections on control to start furnace. (See Fig. 25.)
   → h. Remove regulator adjustment cap from low heat gas valve pressure regulator (See Fig. 53.) and turn low-heat adjusting screw (3/16 or smaller flat-tipped screwdriver) counterclockwise (out) to decrease input rate or clockwise (in) to increase input rate.

NOTE: DO NOT set low-heat manifold pressure less than 1.4-in wc or more than 1.7-in. wc for natural gas. If manifold pressure is outside this range, change main burner orifices.

   i. Install low-heat regulator adjustment cap.
   j. Leave manometer or similar device connected and proceed to Step 4.

NOTE: If orifice hole appears damaged or it is suspected to have been redrilled, check orifice hole with a numbered drill bit of correct size. Never redrill an orifice. A burr-free and squarely aligned orifice hole is essential for proper flame characteristics.

4. Verify natural gas low-heat input rate by clocking meter.

NOTE: Gas valve regulator adjustment caps must be in place for proper input to be clocked.

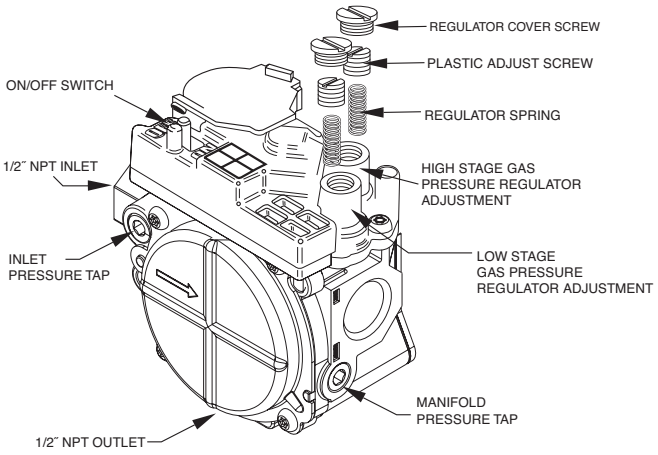

→ **Fig. 53—Redundant Automatic Gas Control Valve**

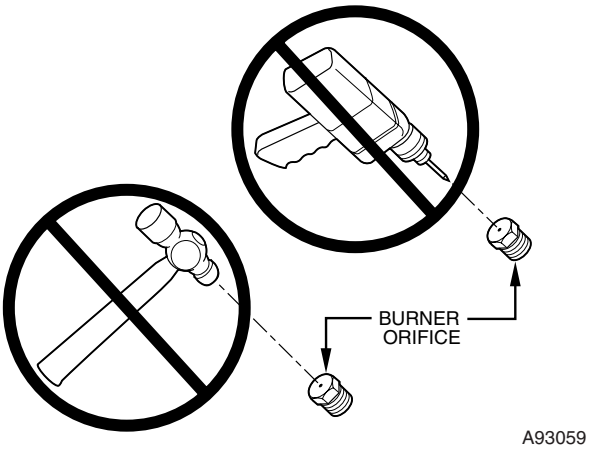

Fig. 54—Orifice Hole

a. Turn off all other gas appliances and pilots served by the meter.

b. Run furnace for 3 minutes in low-heat operation.

c. Measure time (in sec) for gas meter to complete 1 revolution and note reading. The 2 or 5 cubic feet dial provides a more accurate measurement of gas flow.

d. Refer to Table 11 for cubic ft of gas per hr.

e. Multiply gas rate cu ft/hr by heating value (Btu/cu ft) to obtain input.

If clocked rate does not match required input from Step 1, increase manifold pressure to increase input or decrease manifold pressure to decrease input. Repeat steps b through e until correct low-heat input is achieved. Re-install low-heat regulator seal cap on gas valve.

5. Set low heat temperature rise.
The furnace must operate within the temperature rise ranges specified on the furnace rating plate. Do not exceed temperature rise ranges specified on furnace rating plate for high-and low-fire. Determine the temperature rise as follows:

NOTE: Blower access door must be installed when taking temperature rise reading. Leaving blower access door off will result in incorrect temperature measurements.

a. Verify unit is running in low-heat per Step 4. Place thermometers in return and supply ducts as close to furnace as possible. Be sure thermometers do not see radiant heat from heat exchangers. Radiant heat affects temperature rise readings. This practice is particularly important with straight-run ducts.

b. When thermometer readings stabilize, subtract return-air temperature from supply-air temperature to determine air temperature rise.

⚠ WARNING

ELECTRICAL SHOCK HAZARD
Failure to follow this warning could result in personal injury or death.
Disconnect 115-v electrical power before changing speed tap.

⚠ CAUTION

FURNACE DAMAGE HAZARD
Failure to properly set air temperature rise may cause excessive furnace temperatures and shorten furnace life.
Recheck temperature rise. It must be within limits specified on the rating plate. Operation is within a few degrees of the mid-point of rise range when setup switch SW1-4 is OFF.

When setup switch SW1-4 is ON, operation will be near the high end of the rise range for improved comfort.

This furnace is capable of automatically providing proper airflow to maintain the temperature rise within the range specified on unit rating plate.

NOTE: If the temperature rise is outside this range, first check:
1.) Gas input for low heat operation.
2.) Derate for altitude if applicable.
3.) Return and supply ducts for excessive restrictions causing static pressures greater than 0.50-in. wc.
4.) Ensure low-heat rise adjust switch SW1-3 is in ON position when bypass humidifier is used. Refer to Table 8 and Fig. 25 and 57.
5.) Make sure proper model plug is installed.

6. Adjust Manifold Pressure to Obtain High Heat Rate

a. Remove high heat regulator adjustment cap from gas valve pressure regulator.

b. Jumper R, W/W1 and W2 thermostat connections on control to run furnace in high heat. (See Fig. 25 and 57.)

→ c. Turn high-heat adjusting screw (3/16 or smaller flat-tipped screwdriver)) counterclockwise (out) to decrease input rate or clockwise (in) to increase rate.

d. Re-install high-heat adjustment caps.

NOTE: DO NOT set high-heat manifold pressure less than 3.2-in. wc or more than 3.8-in. wc for natural gas. If manifold pressure is outside this range, change main burner orifices.

7. Verify natural gas high heat input rate by clocking meter.

NOTE: Gas valve regulator adjustment caps must be in place for proper input to be clocked.

a. Turn off all other gas appliances and pilots served by the meter.

b. Run for 3 minutes in high-heat operation.

c. Measure time (in sec) for gas meter to complete 1 revolution and note reading.

d. Refer to Table 11 for cubic ft of gas per hr.

e. Multiply gas rate cu ft/hr by heating value (Btu/cu ft) to obtain input.

NOTE: Using the 2 cu. ft. or 5 cu. ft. gas meter dial provides greater accuracy in verifying gas input rate.

Table 11—GAS RATE (CU FT/HR)

SECONDS FOR 1 REVOLUTION	SIZE OF TEST DIAL			SECONDS FOR 1 REVOLUTION	SIZE OF TEST DIAL		
	1 Cu Ft	2 Cu Ft	5 Cu Ft		1 Cu Ft	2 Cu Ft	5 Cu Ft
10	360	720	1800	50	72	144	360
11	327	655	1636	51	71	141	355
12	300	600	1500	52	69	138	346
13	277	555	1385	53	68	136	340
14	257	514	1286	54	67	133	333
15	240	480	1200	55	65	131	327
16	225	450	1125	56	64	129	321
17	212	424	1059	57	63	126	316
18	200	400	1000	58	62	124	310
19	189	379	947	59	61	122	305
20	180	360	900	60	60	120	300
21	171	343	857	62	58	116	290
22	164	327	818	64	56	112	281
23	157	313	783	66	54	109	273
24	150	300	750	68	53	106	265
25	144	288	720	70	51	103	257
26	138	277	692	72	50	100	250
27	133	267	667	74	48	97	243
28	129	257	643	76	47	95	237
29	124	248	621	78	46	92	231
30	120	240	600	80	45	90	225
31	116	232	581	82	44	88	220
32	113	225	563	84	43	86	214
33	109	218	545	86	42	84	209
34	106	212	529	88	41	82	205
35	103	206	514	90	40	80	200
36	100	200	500	92	39	78	196
37	97	195	486	94	38	76	192
38	95	189	474	96	38	75	188
39	92	185	462	98	37	74	184
40	90	180	450	100	36	72	180
41	88	176	439	102	35	71	178
42	86	172	429	104	35	69	173
43	84	167	419	106	34	68	170
44	82	164	409	108	33	67	167
45	80	160	400	110	33	65	164
46	78	157	391	112	32	64	161
47	76	153	383	116	31	62	155
48	75	150	375	120	30	60	150
49	73	147	367				

If clocked rate does not match required input from Step 1, increase manifold pressure to increase input or decrease manifold pressure to decrease input. Repeat steps b through e until correct high heat input is achieved. Re-install high-heat regulator seal cap on gas valve.

8. Set high heat temperature rise.
   Jumper R to W/W1 and W2 to check high-gas-heat temperature rise. Do not exceed temperature rise ranges specified on furnace rating plate for high heat. The furnace must operate within the temperature rise ranges specified on the furnace rating plate.

Determine the air temperature rise as follows:

NOTE: Blower access door must be installed when taking temperature rise reading. Leaving blower access door off will result in incorrect temperature measurements.

a. Verify the unit is operating in high heat per Step 6. Place thermometers in return and supply ducts as close to furnace as possible. Be sure thermometers do not see radiant heat from heat exchangers. Radiant heat affects temperature rise readings. This practice is particularly important with straight-run ducts.

b. When thermometer readings stabilize, subtract return-air temperature from supply-air temperature to determine air temperature rise.

⚠ CAUTION

FURNACE DAMAGE HAZARD
Failure to properly set temperature rise may cause excessive furnace temperatures and shorten furnace life.
Recheck temperature rise. It must be within limits specified on the rating plate. Operation is within a few degrees of the mid-point of rise range when setup switch SW1-4 is OFF.

When setup switch SW1-4 is ON, operation will be near the high end of the rise range for improved comfort.

This furnace is capable of automatically providing proper airflow to maintain the temperature rise within the range specified on unit rating plate.

NOTE: If the temperature rise is outside this range, first check:
1.) Gas input for low-and high-heat operation.
2.) Derate for altitude if applicable.
3.) Return and supply ducts for excessive restrictions causing static pressures greater than 0.50-in. wc.
4.) Make sure proper model plug is installed.

c. Remove thermostat jumpers and release blower access door switch.

d. Repeat Steps a through c as required to adjust for proper rise.

e. When correct high heat input rate and temperature rise is achieved, turn gas valve ON/OFF switch to OFF.

f. Release blower access door switch.

g. Remove manometer or similar device from gas valve.

h. Re-install manifold pressure tap plug in gas valve. (See Fig. 53.)

⚠ WARNING

→ **FIRE HAZARD**
Failure to reinstall manifold pressure tap plug in gas valve could result in personal injury, property damage or death.

Reinstall manifold pressure tap plug in gas valve to prevent gas leak.

i. Remove thermostat jumper wire from furnace control board.

j. Turn gas valve ON/OFF switch to ON.

k. Proceed to Step 9, "Set Blower Off Delay" before installing blower access door.

⚠ CAUTION

Failure to properly set air temperature rise may cause excessive furnace temperatures and shorten furnace life.
Recheck temperature rise. It must be within limits specified on the rating plate. Recommended operation is at the mid-point of rise range or slightly above.

9. Set Blower Off Delay
   a. Remove blower access door if installed.
   b. Turn Dip switch SW-7 or SW-8 ON or OFF for desired blower off delay. (See Table 10 and Fig. 25 and 57.)

TABLE 12—Orifice Size and Manifold Pressure for Gas Input Rate (Tabulated Data Based On 22,000 Btuh High-Heat/14,500 Btuh for Low-Heat Per Burner, Derated 4 Percent For Each 1000 Ft Above Sea Level)

ALTITUDE RANGE (FT)		AVG GAS HEAT VALUE (BTU/CU FT)	SPECIFIC GRAVITY OF NATURAL GAS							
			0.58		0.60		0.62		0.64	
			Orifice no.	Manifold Pressure	Orifice no.	Manifold Pressure	Orifice no.	Manifold Pressure	Orifice no.	Manifold Pressure
U.S.A. and Canada	0 to 2000	900	42	3.5/1.5	42	3.6/1.6	42	3.7/1.6	41	3.5/1.5
		925	42	3.3/1.4	42	3.4/1.5	42	3.5/1.5	42	3.7/1.6
		950	43	3.8/1.7	42	3.3/1.4	42	3.4/1.5	42	3.5/1.5
		975	43	3.6/1.6	43	3.8/1.6	42	3.2/1.4	42	3.3/1.4
		1000	43	3.5/1.5	43	3.6/1.6	43	3.7/1.6	43	3.8/1.7
		1025	43	3.3/1.4	43	3.4/1.5	43	3.5/1.5	43	3.6/1.6
		1050	44	3.6/1.6	43	3.2/1.4	43	3.4/1.5	43	3.5/1.5
		1075	44	3.4/1.5	44	3.5/1.5	43	3.2/1.4	43	3.3/1.4
		1100	44	3.3/1.4	44	3.4/1.5	44	3.5/1.5	43	3.2/1.4
ALTITUDE RANGE (FT)		AVG GAS HEAT VALUE (BTU/CU FT)	SPECIFIC GRAVITY OF NATURAL GAS							
			0.58		0.60		0.62		0.64	
			Orifice no.	Manifold Pressure	Orifice no.	Manifold Pressure	Orifice no.	Manifold Pressure	Orifice no.	Manifold Pressure
U.S.A. and Canada	U.S.A. Altitudes 2001 to 3000 or Canada Altitudes 2001 to 4500	800	42	3.4/1.5	42	3.5/1.5	42	3.6/1.6	42	3.7/1.6
		825	42	3.2/1.4	42	3.3/1.4	42	3.4/1.5	42	3.5/1.5
		850	43	3.7/1.6	43	3.8/1.6	42	3.2/1.4	42	3.3/1.4
		875	43	3.5/1.5	43	3.6/1.6	43	3.7/1.6	43	3.8/1.7
		900	43	3.3/1.4	43	3.4/1.5	43	3.5/1.5	43	3.6/1.6
		925	44	3.5/1.5	43	3.2/1.4	43	3.3/1.4	43	3.4/1.5
		950	44	3.4/1.5	44	3.5/1.5	44	3.6/1.6	43	3.2/1.4
		975	44	3.2/1.4	44	3.3/1.4	44	3.4/1.5	44	3.5/1.5
		1000	45	3.7/1.6	45	3.8/1.7	44	3.2/1.4	44	3.4/1.5
ALTITUDE RANGE (FT)		AVG GAS HEAT VALUE (BTU/CU FT)	SPECIFIC GRAVITY OF NATURAL GAS							
			0.58		0.60		0.62		0.64	
			Orifice no.	Manifold Pressure	Orifice no.	Manifold Pressure	Orifice no.	Manifold Pressure	Orifice no.	Manifold Pressure
U.S.A. Only	3001 to 4000	775	42	3.2/1.4	42	3.3/1.4	42	3.4/1.5	42	3.5/1.5
		800	43	3.6/1.6	43	3.8/1.6	42	3.2/1.4	42	3.3/1.4
		825	43	3.4/1.5	43	3.5/1.5	43	3.7/1.6	43	3.8/1.6
		850	43	3.2/1.4	43	3.3/1.4	43	3.4/1.5	43	3.6/1.5
		875	44	3.5/1.5	44	3.6/1.6	43	3.3/1.4	43	3.4/1.5
		900	44	3.3/1.4	44	3.4/1.5	44	3.5/1.5	43	3.2/1.4
		925	45	3.8/1.6	44	3.2/1.4	44	3.3/1.5	44	3.4/1.5
		950	46	3.8/1.6	45	3.7/1.6	45	3.8/1.7	44	3.3/1.4
ALTITUDE RANGE (FT)		AVG GAS HEAT VALUE (BTU/CU FT)	SPECIFIC GRAVITY OF NATURAL GAS							
			0.58		0.60		0.62		0.64	
			Orifice no.	Manifold Pressure	Orifice no.	Manifold Pressure	Orifice no.	Manifold Pressure	Orifice no.	Manifold Pressure
U.S.A. Only	4001 to 5000	750	43	3.6/1.6	43	3.8/1.6	42	3.2/1.4	42	3.3/1.4
		775	43	3.4/1.5	43	3.5/1.5	43	3.6/1.6	43	3.8/1.6
		800	43	3.2/1.4	43	3.3/1.4	43	3.4/1.5	43	3.5/1.5
		825	44	3.4/1.5	44	3.6/1.5	43	3.2/1.4	43	3.3/1.4
		850	44	3.2/1.4	44	3.4/1.5	44	3.5/1.5	44	3.6/1.6
		875	45	3.7/1.6	45	3.8/1.7	44	3.3/1.4	44	3.4/1.5
		900	46	3.7/1.6	46	3.8/1.7	45	3.7/1.6	44	3.2/1.4
		925	46	3.5/1.5	46	3.6/1.6	46	3.7/1.6	46	3.8/1.7

* Orifice numbers 43 are factory installed

TABLE 12—Orifice Size and Manifold Pressure for Gas Input Rate (Tabulated Data Based On 22,000 Btuh High-Heat/14,500 Btuh for Low-Heat Per Burner, Derated 4 Percent For Each 1000 Ft Above Sea Level)(Continued)

ALTITUDE RANGE (FT)		AVG GAS HEAT VALUE AT ALTITUDE (BTU/CU FT)	SPECIFIC GRAVITY OF NATURAL GAS							
			0.58		0.60		0.62		0.64	
			Orifice No.	Manifold Pressure	Orifice No.	Manifold Pressure	Orifice No.	Manifold Pressure	Orifice No.	Manifold Pressure
U.S.A. Only	5001 to 6000	725	43	3.4/1.5	43	3.5/1.5	43	3.6/1.6	43	3.7/1.6
		750	43	3.2/1.4	43	3.3/1.4	43	3.4/1.5	43	3.5/1.5
		775	44	3.4/1.5	44	3.5/1.5	43	3.2/1.4	43	3.3/1.4
		800	44	3.2/1.4	44	3.3/1.4	44	3.4/1.5	44	3.5/1.5
		825	46	3.8/1.7	45	3.8/1.6	44	3.2/1.4	44	3.3/1.4
		850	46	3.6/1.6	46	3.7/1.6	46	3.8/1.7	45	3.8/1.6
		875	47	3.8/1.7	46	3.5/1.5	46	3.6/1.6	46	3.7/1.6
		900	47	3.6/1.6	47	3.8/1.6	46	3.4/1.5	46	3.5/1.5
ALTITUDE RANGE (FT)		AVG GAS HEAT VALUE AT ALTITUDE (BTU/CU FT)	SPECIFIC GRAVITY OF NATURAL GAS							
			0.58		0.60		0.62		0.64	
			Orifice No.	Manifold Pressure	Orifice No.	Manifold Pressure	Orifice No.	Manifold Pressure	Orifice No.	Manifold Pressure
U.S.A. Only	6001 to 7000	675	43	3.4/1.5	43	3.5/1.5	43	3.6/1.6	43	3.7/1.6
		700	44	3.6/1.6	43	3.3/1.4	43	3.4/1.5	43	3.5/1.5
		725	44	3.4/1.5	44	3.5/1.5	44	3.6/1.6	43	3.2/1.4
		750	45	3.8/1.7	44	3.3/1.4	44	3.4/1.5	44	3.5/1.5
		775	46	3.7/1.6	45	3.7/1.6	45	3.8/1.7	44	3.2/1.4
		800	46	3.5/1.5	46	3.6/1.6	46	3.8/1.6	45	3.7/1.6
		825	47	3.7/1.6	46	3.4/1.5	46	3.5/1.5	46	3.6/1.6
		850	47	3.5/1.5	47	3.6/1.6	47	3.8/1.6	46	3.4/1.5
ALTITUDE RANGE (FT)		AVG GAS HEAT VALUE AT ALTITUDE (BTU/CU FT)	SPECIFIC GRAVITY OF NATURAL GAS							
			0.58		0.60		0.62		0.64	
			Orifice No.	Mainifold Pressure	Orifice No.	Manifold Pressure	Orifice No.	Manifold Pressure	Orifice No.	Manifold Pressure
U.S.A. Only	7001 to 8000	650	44	3.6/1.6	43	3.2/1.4	43	3.4/1.5	43	3.5/1.5
		675	44	3.3/1.5	44	3.5/1.5	44	3.6/1.6	43	3.2/1.4
		700	45	3.8/1.6	44	3.2/1.4	44	3.3/1.4	44	3.4/1.5
		725	46	3.7/1.6	46	3.8/1.7	45	3.7/1.6	44	3.2/1.4
		750	46	3.4/1.5	46	3.6/1.5	46	3.7/1.6	46	3.8/1.6
		775	47	3.6/1.6	47	3.8/1.6	46	3.4/1.5	46	3.6/1.5
		800	47	3.4/1.5	47	3.5/1.5	47	3.7/1.6	47	3.8/1.6
		825	48	3.7/1.6	48	3.8/1.6	47	3.4/1.5	47	3.6/1.5
ALTITUDE RANGE (FT)		AVG GAS HEAT VALUE AT ALTITUDE (BTU/CU FT)	SPECIFIC GRAVITY OF NATURAL GAS							
			0.58		0.60		0.62		0.64	
			Orifice No.	Manifold Pressure	Orifice No.	Manifold Pressure	Orifice No.	Manifold Pressure	Orifice No.	Manifold Pressure
U.S.A. Only	8001 to 9000	625	44	3.3/1.5	44	3.5/1.5	44	3.6/1.6	43	3.2/1.4
		650	45	3.7/1.6	44	3.2/1.4	44	3.3/1.4	44	3.4/1.5
		675	46	3.6/1.6	46	3.8/1.6	45	3.7/1.6	45	3.8/1.7
		700	47	3.8/1.7	46	3.5/1.5	46	3.6/1.6	46	3.7/1.6
		725	47	3.6/1.6	47	3.7/1.6	47	3.8/1.7	46	3.5/1.5
		750	48	3.8/1.7	47	3.5/1.5	47	3.6/1.6	47	3.7/1.6
		775	48	3.6/1.5	48	3.7/1.6	48	3.8/1.7	47	3.5/1.5

* Orifice numbers 43 are factory installed

TABLE 12—Orifice Size and Manifold Pressure for Gas Input Rate (Tabulated Data Based On 22,000 Btuh High-Heat/14,500 Btuh for Low-Heat Per Burner, Derated 4 Percent For Each 1000 Ft Above Sea Level)(Continued)

ALTITUDE RANGE (FT)		AVG GAS HEAT VALUE AT ALTITUDE (BTU/CU FT)	SPECIFIC GRAVITY OF NATURAL GAS							
			0.58		0.60		0.62		0.64	
			Orifice No.	Manifold Pressure	Orifice No.	Manifold Pressure	Orifice No.	Manifold Pressure	Orifice No.	Manifold Pressure
U.S.A. Only	9001 to 10,000	600	45	3.7/1.6	45	3.8/1.7	44	3.3/1.4	44	3.4/1.5
		625	46	3.6/1.6	46	3.7/1.6	46	3.8/1.7	45	3.8/1.6
		650	47	3.8/1.6	46	3.4/1.5	46	3.6/1.5	46	3.7/1.6
		675	47	3.5/1.5	47	3.6/1.6	47	3.7/1.6	46	3.4/1.5
		700	48	3.7/1.6	48	3.8/1.7	47	3.5/1.5	47	3.6/1.6
		725	48	3.5/1.5	48	3.6/1.6	48	3.7/1.6	48	3.8/1.7

* Orifice numbers 43 are factory installed

10. Set thermostat heat anticipator.
    a. Mechanical thermostat—Set thermostat heat anticipator to match the amp draw of the electrical components in the R-W/W1 circuit. Accurate amp draw readings can be obtained at the wires normally connected to thermostat subbase terminals, R and W. The thermostat anticipator should NOT be in the circuit while measuring current.
       (1.) Set SW1-2 switch on furnace control board to ON.
       (2.) Remove thermostat from subbase or from wall.
       (3.) Connect an amp meter as shown in Fig. 55 across the R and W subbase terminals or R and W wires at wall.
       (4.) Record amp draw across terminals when furnace is in low heat and after blower starts.
       (5.) Set heat anticipator on thermostat per thermostat instructions and install on subbase or wall.
       (6.) Turn SW1-2 switch OFF.
       (7.) Install blower access door.
    b. Electronic thermostat: Set cycle rate for 3 cycles per hr.
11. Set Airflow for Air Conditioning -Single Stage and High Stage Cooling
    The ECM blower can be adjusted for a range of airflows for Low Speed or High Speed cooling. See Table 5-Air Delivery - CFM (With Filter). Depending on the model size, the cooling airflow can be adjusted from 1½ tons nominal cooling to 3 ½, to 4 or to 6 tons of nominal cooling based on 350 cfm ton.
    The cooling airflow is adjusted by turning Setup switches SW2-1, SW2-2 and SW2-3 either ON or OFF. Select the required airflow from Fig. 61. Fig. 61 is based on 350 CFM per ton. For airflow at 400 CFM per ton, turn Setup SW1-5 ON (See Table 8 and Fig. 25 and 57.)

NOTE: 6 ton airflow will truncate at 2200 cfm on applicable models. For a complete explanation of cooling airflow, refer to the section titled ″Sequence of Operation.″

12. Set Airflow For Continuous Fan/Low Speed Cooling Airflow
    The ECM blower motor can be adjusted for continuous fan speeds different than heating or cooling fan speed. See Table 5 - Air Delivery - CFM (With Filter). Select the required continuous fan airflow from Fig. 61.
    The continuous fan speed is also the fan speed for low speed cooling when furnace is used with a 2-speed cooling unit. Adjust the Continuous Fan CFM to match the airflow required for low speed cooling. Select the required airflow from Fig. 61. For airflow at 400 CFM per ton, turn Setup SW1-5 ON (See Fig. 61.) The airflow selected for low speed cooling will also be the airflow used for continuous fan.
    The continuous fan speed can be further adjusted at the thermostat using the ″Comfort Fan″ select function. Changing the continuous fan speed at the thermostat DOES NOT change the low speed cooling airflow selected at the control board.

TABLE 13–Orifice Size and Manifold Pressure for Gas Input Rate (Tabulated Data Based On 21,000 Btuh High-Heat/14,500 Btuh for Low-Heat Per Burner, Derated 4 Percent For Each 1000 Ft Above Sea Level)

ALTITUDE RANGE (FT)		AVG GAS HEAT VALUE (BTU/CU FT)	SPECIFIC GRAVITY OF NATURAL GAS							
			0.58		0.60		0.62		0.64	
			Orifice no.	Manifold Pressure	Orifice no.	Manifold Pressure	Orifice no.	Manifold Pressure	Orifice no.	Manifold Pressure
U.S.A. and Canada	0 to 2000	900	42	3.2/1.5	42	3.3/1.6	42	3.4/1.6	42	3.5/1.7
		925	43	3.7/1.8	43	3.8/1.8	42	3.2/1.5	42	3.3/1.6
		950	43	3.5/1.7	43	3.6/1.7	43	3.7/1.8	43	3.8/1.8
		975	43	3.3/1.6	43	3.4/1.6	43	3.5/1.7	43	3.7/1.7
		1000	44	3.6/1.7	43	3.3/1.6	43	3.4/1.6	43	3.5/1.7
		1025	44	3.4/1.6	44	3.6/1.7	43	3.2/1.5	43	3.3/1.6
		1050	44	3.3/1.6	44	3.4/1.6	44	3.5/1.7	43	3.2/1.5
		1075	45	3.8/1.8	44	3.2/1.5	44	3.3/1.6	44	3.4/1.6
		1100	46	3.8/1.8	45	3.7/1.8	44	3.2/1.5	44	3.3/1.6
ALTITUDE RANGE (FT)		AVG GAS HEAT VALUE (BTU/CU FT)	SPECIFIC GRAVITY OF NATURAL GAS							
			0.58		0.60		0.62		0.64	
			Orifice no.	Manifold Pressure	Orifice no.	Manifold Pressure	Orifice no.	Manifold Pressure	Orifice no.	Manifold Pressure
U.S.A. and Canada	U.S.A. Altitudes 2001 to 3000 or Canada Altitudes 2001 to 4500	800	43	3.8/1.8	42	3.2/1.5	42	3.3/1.6	42	3.4/1.6
		825	43	3.5/1.7	43	3.7/1.7	43	3.8/1.8	42	3.2/1.5
		850	43	3.3/1.6	43	3.5/1.6	43	3.6/1.7	43	3.7/1.8
		875	43	3.2/1.5	43	3.3/1.6	43	3.4/1.6	43	3.5/1.7
		900	44	3.4/1.6	44	3.5/1.7	43	3.2/1.5	43	3.3/1.6
		925	44	3.2/1.5	44	3.3/1.6	44	3.5/1.6	44	3.6/1.7
		950	45	3.7/1.8	45	3.8/1.8	44	3.3/1.6	44	3.4/1.6
		975	46	3.7/1.8	46	3.8/1.8	45	3.8/1.8	44	3.2/1.5
		1000	46	3.5/1.7	46	3.6/1.7	46	3.8/1.8	45	3.7/1.8
ALTITUDE RANGE (FT)		AVG GAS HEAT VALUE (BTU/CU FT)	SPECIFIC GRAVITY OF NATURAL GAS							
			0.58		0.60		0.62		0.64	
			Orifice no.	Manifold Pressure	Orifice no.	Manifold Pressure	Orifice no.	Manifold Pressure	Orifice no.	Manifold Pressure
U.S.A. Only	3001 to 4000	775	43	3.5/1.7	43	3.7/1.7	43	3.8/1.8	42	3.2/1.5
		800	43	3.3/1.6	43	3.4/1.6	43	3.5/1.7	43	3.7/1.7
		825	44	3.6/1.7	43	3.2/1.5	43	3.3/1.6	43	3.4/1.6
		850	44	3.4/1.6	44	3.5/1.7	44	3.6/1.7	43	3.2/1.5
		875	45	3.8/1.8	44	3.3/1.6	44	3.4/1.6	44	3.5/1.7
		900	46	3.8/1.8	45	3.8/1.8	44	3.2/1.5	44	3.3/1.6
		925	46	3.6/1.7	46	3.7/1.8	45	3.7/1.8	45	3.8/1.8
		950	46	3.4/1.6	46	3.5/1.7	46	3.7/1.7	46	3.8/1.8
ALTITUDE RANGE (FT)		AVG GAS HEAT VALUE (BTU/CU FT)	SPECIFIC GRAVITY OF NATURAL GAS							
			0.58		0.60		0.62		0.64	
			Orifice no.	Manifold Pressure	Orifice no.	Manifold Pressure	Orifice no.	Manifold Pressure	Orifice no.	Manifold Pressure
U.S.A. Only	4001 to 5000	750	43	3.3/1.6	43	3.4/1.6	43	3.5/1.7	43	3.6/1.7
		775	44	3.6/1.7	43	3.2/1.5	43	3.3/1.6	43	3.4/1.6
		800	44	3.3/1.6	44	3.4/1.6	44	3.6/1.7	43	3.2/1.5
		825	45	3.8/1.8	44	3.2/1.5	44	3.4/1.6	44	3.5/1.6
		850	46	3.8/1.8	45	3.7/1.8	45	3.8/1.8	44	3.3/1.6
		875	46	3.5/1.7	46	3.7/1.7	46	3.8/1.8	45	3.7/1.8
		900	47	3.8/1.8	46	3.5/1.7	46	3.6/1.7	46	3.7/1.8
		925	47	3.6/1.7	47	3.7/1.8	47	3.8/1.8	46	3.5/1.7

* Orifice numbers 43 are factory installed

TABLE 13–Orifice Size and Manifold Pressure for Gas Input Rate (Tabulated Data Based On 21,000 Btuh High-Heat/14,500 Btuh for Low-Heat Per Burner, Derated 4 Percent For Each 1000 Ft Above Sea Level)(Continued)

ALTITUDE RANGE (FT)		AVG GAS HEAT VALUE AT ALTITUDE (BTU/CU FT)	SPECIFIC GRAVITY OF NATURAL GAS							
			0.58		0.60		0.62		0.64	
			Orifice No.	Manifold Pressure	Orifice No.	Manifold Pressure	Orifice No.	Manifold Pressure	Orifice No.	Manifold Pressure
U.S.A. Only	5001 to 6000	725	44	3.5/1.7	43	3.2/1.5	43	3.3/1.6	43	3.4/1.6
		750	44	3.3/1.6	44	3.4/1.6	44	3.5/1.7	43	3.2/1.5
		775	45	3.7/1.8	44	3.2/1.5	44	3.3/1.6	44	3.4/1.6
		800	46	3.7/1.8	46	3.8/1.8	45	3.8/1.8	44	3.2/1.5
		825	46	3.5/1.7	46	3.6/1.7	46	3.7/1.8	46	3.8/1.8
		850	47	3.7/1.8	47	3.8/1.8	46	3.5/1.7	46	3.6/1.7
		875	47	3.5/1.7	47	3.6/1.7	47	3.7/1.8	46	3.4/1.6
		900	48	3.8/1.8	47	3.4/1.6	47	3.5/1.7	47	3.7/1.7
ALTITUDE RANGE (FT)		AVG GAS HEAT VALUE AT ALTITUDE (BTU/CU FT)	SPECIFIC GRAVITY OF NATURAL GAS							
			0.58		0.60		0.62		0.64	
			Orifice No.	Manifold Pressure	Orifice No.	Manifold Pressure	Orifice No.	Manifold Pressure	Orifice No.	Manifold Pressure
U.S.A. Only	6001 to 7000	675	44	3.5/1.7	43	3.2/1.5	43	3.3/1.6	43	3.4/1.6
		700	44	3.3/1.6	44	3.4/1.6	44	3.5/1.7	43	3.2/1.5
		725	45	3.7/1.8	45	3.8/1.8	44	3.3/1.6	44	3.4/1.6
		750	46	3.6/1.7	46	3.8/1.8	45	3.7/1.8	45	3.8/1.8
		775	46	3.4/1.6	46	3.5/1.7	46	3.6/1.7	46	3.8/1.8
		800	47	3.6/1.7	47	3.8/1.8	46	3.4/1.6	46	3.5/1.7
		825	47	3.4/1.6	47	3.5/1.7	47	3.6/1.7	47	3.8/1.8
		850	48	3.7/1.7	48	3.8/1.8	47	3.4/1.6	47	3.5/1.7
ALTITUDE RANGE (FT)		AVG GAS HEAT VALUE AT ALTITUDE (BTU/CU FT)	SPECIFIC GRAVITY OF NATURAL GAS							
			0.58		0.60		0.62		0.64	
			Orifice No.	Manifold Pressure	Orifice No.	Manifold Pressure	Orifice No.	Manifold Pressure	Orifice No.	Manifold Pressure
U.S.A. Only	7001 to 8000	650	44	3.3/1.6	44	3.4/1.6	44	3.5/1.7	43	3.2/1.5
		675	45	3.7/1.8	45	3.8/1.8	44	3.3/1.6	44	3.4/1.6
		700	46	3.6/1.7	46	3.7/1.8	46	3.8/1.8	45	3.8/1.8
		725	47	3.8/1.8	46	3.5/1.7	46	3.6/1.7	46	3.7/1.8
		750	47	3.5/1.7	47	3.7/1.8	47	3.8/1.8	46	3.5/1.6
		775	48	3.8/1.8	47	3.4/1.6	47	3.6/1.7	47	3.7/1.7
		800	48	3.6/1.7	48	3.7/1.8	48	3.8/1.8	47	3.4/1.6
		825	48	3.3/1.6	48	3.5/1.6	48	3.6/1.7	48	3.7/1.8
ALTITUDE RANGE (FT)		AVG GAS HEAT VALUE AT ALTITUDE (BTU/CU FT)	SPECIFIC GRAVITY OF NATURAL GAS							
			0.58		0.60		0.62		0.64	
			Orifice No.	Manifold Pressure	Orifice No.	Manifold Pressure	Orifice No.	Manifold Pressure	Orifice No.	Manifold Pressure
U.S.A. Only	8001 to 9000	625	45	3.7/1.8	45	3.8/1.8	44	3.3/1.6	44	3.4/1.6
		650	46	3.6/1.7	46	3.7/1.8	46	3.8/1.8	45	3.8/1.8
		675	47	3.8/1.8	46	3.4/1.6	46	3.5/1.7	46	3.7/1.7
		700	47	3.5/1.7	47	3.6/1.7	47	3.7/1.8	46	3.4/1.6
		725	48	3.7/1.8	48	3.8/1.8	47	3.5/1.7	47	3.6/1.7
		750	48	3.5/1.7	48	3.6/1.7	48	3.7/1.8	48	3.8/1.8
		775	49	3.8/1.8	48	3.4/1.6	48	3.5/1.7	48	3.6/1.7

* Orifice numbers 43 are factory installed

TABLE 13–Orifice Size and Manifold Pressure for Gas Input Rate (Tabulated Data Based On 21,000 Btuh High-Heat/14,500 Btuh for Low-Heat Per Burner, Derated 4 Percent For Each 1000 Ft Above Sea Level)(Continued)

ALTITUDE RANGE (FT)		AVG GAS HEAT VALUE AT ALTITUDE (BTU/CU FT)	SPECIFIC GRAVITY OF NATURAL GAS							
			0.58		0.60		0.62		0.64	
			Orifice No.	Manifold Pressure	Orifice No.	Manifold Pressure	Orifice No.	Manifold Pressure	Orifice No.	Manifold Pressure
U.S.A. Only	9001 to 10,000	600	46	3.6/1.7	46	3.7/1.8	46	3.8/1.8	45	3.7/1.8
		625	47	3.7/1.8	47	3.8/1.8	46	3.5/1.7	46	3.6/1.7
		650	47	3.4/1.6	47	3.6/1.7	47	3.7/1.8	47	3.8/1.8
		675	48	3.6/1.7	48	3.8/1.8	47	3.4/1.6	47	3.5/1.7
		700	48	3.4/1.6	48	3.5/1.7	48	3.6/1.7	48	3.7/1.8
		725	49	3.7/1.8	49	3.8/1.8	48	3.4/1.6	48	3.5/1.7

* Orifice numbers 43 are factory installed

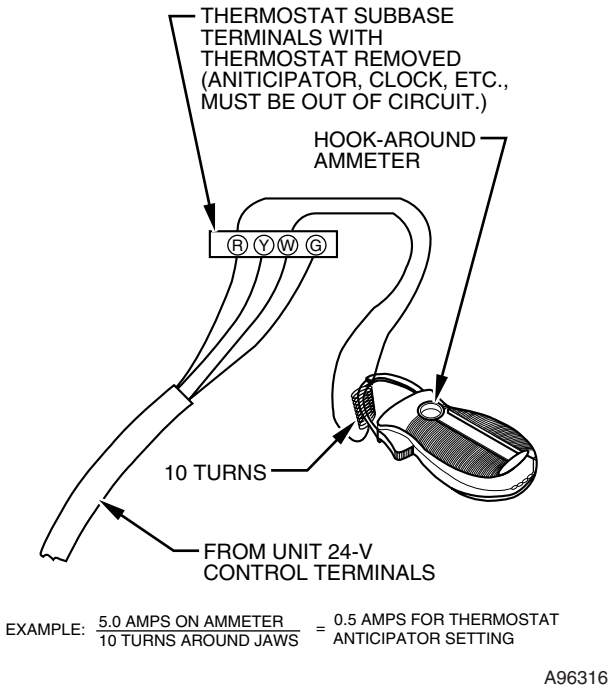

Fig. 55—Amp Draw Check With Ammeter

Step 4—Check Safety Controls

The flame sensor, gas valve, and pressure switch were all checked in the Start-up procedure section as part of normal operation.

1. Check Main Limit Switch
   This control shuts off combustion system and energizes air-circulating blower motor, if furnace overheats. By using this method to check limit control, it can be established that limit is functioning properly and will operate if there is a restricted return-air supply or motor failure. If limit control does not function during this test, cause must be determined and corrected.
   a. Run furnace for at least 5 minutes.
   b. Gradually block off return air with a piece of cardboard or sheet metal until the limit trips.
   c. Unblock return air to permit normal circulation.
   d. Burners will re-light when furnace cools down.
2. Check draft safeguard switch.
   The purpose of this control is to cause the safe shutdown of the furnace during certain blocked vent conditions.
   a. Verify vent pipe is cool to the touch.
   b. Disconnect power to furnace and remove vent connector from furnace vent elbow.
   c. Restore power to furnace and set room thermostat above room temperature.
   d. After normal start-up, allow furnace to operate for 2 minutes, then block vent elbow in furnace 80 percent of vent area with a piece of flat sheet metal.
   e. Furnace should cycle off within 2 minutes. If gas does not shut off within 2 minutes, determine reason draft safeguard switch did not function properly and correct condition.
   f. Remove blockage from furnace vent elbow.
   g. Switch will auto-reset when it cools.
   h. Re-install vent connector.

NOTE: Should switch remain open longer than 3 minutes, furnace control board will lockout the furnace for 3 hours. To reset furnace control board, turn thermostat below room temperature or from HEAT to OFF and turn 115-v power OFF, then back ON.

3. Check Pressure Switch(es)
   This control proves operation of the draft inducer blower.
   a. Turn off 115-v power to furnace.
   b. Disconnect inducer motor lead wires from wire harness.
   c. Turn on 115-v power to furnace.
   d. Set thermostat to ″call for heat″ and wait 1 minute. When pressure switch is functioning properly, hot surface igniter should NOT glow and control diagnostic light flashes a status code 32. If hot surface igniter glows when inducer motor is disconnected, shut down furnace immediately.
   e. Determine reason pressure switch did not function properly and correct condition.
   f. Turn off 115-v power to furnace.
   g. Reconnect inducer motor wires, replace outer door, and turn on 115-v power.
   h. Blower will run for 90 seconds before beginning the call for heat again.
   i. Furnace should ignite normally.

Step 5—Checklist

1. Put away tools and instruments. Clean up debris.
2. Verify that switches SW1-1 and SW1-6 are OFF and other setup switches are set as desired. Verify that switches SW1-7 and SW1-8 for the blower OFF DELAY are set as desired per Table 10.
3. Verify that blower and burner access doors are properly installed.

SERVICE

LED CODE STATUS
CONTINUOUS OFF - Check for 115VAC at L1 and L2, and 24VAC at SEC-1 and SEC-2.
CONTINUOUS ON - Control has 24VAC power.
RAPID FLASHING - Line voltage (115VAC) polarity reversed.

If status code recall is needed disconnect the "R" thermostat lead, reset power, and put setup switch "SW1-1" in the ON position. To clear the status code history put setup switch "SW1-1" in the ON position and jumper thermostat terminals "R", "W/W1", and "Y/Y2" simultaneously until status code #11 is flashed.

EACH OF THE FOLLOWING STATUS CODES IS A TWO DIGIT NUMBER WITH THE FIRST DIGIT DETERMINED BY THE NUMBER OF SHORT FLASHES AND THE SECOND DIGIT BY THE NUMBER OF LONG FLASHES.

11 NO PREVIOUS CODE - Stored status codes are erased automatically after 72 hours or as specified above.
12 BLOWER ON AFTER POWER UP (115 VAC or 24 VAC) -Blower runs for 90 seconds, if unit is powered up during a call for heat (R-W/W1 closed) or (R-W/W1 opens) during blower on-delay period.
13 LIMIT CIRCUIT LOCKOUT - Lockout occurs if a limit, draft safeguard, flame rollout, or blocked vent switch (if used) is open longer than 3 minutes or 10 successive limit trips occurred during high-heat. Control will auto reset after three hours. Refer to status code #33.
14 IGNITION LOCKOUT - Control will auto-reset after three hours. Refer to status code #34.
15 BLOWER MOTOR LOCKOUT - Indicates the blower failed to reach 250 RPM or the blower failed to communicate within 30 seconds after being turned ON in two successive heating cycles. Control will auto reset after 3 hours. Refer to status code #41.
21 GAS HEATING LOCKOUT - Control will NOT auto reset. Check for:
- Mis-wired gas valve -Defective control (valve relay)
22 ABNORMAL FLAME-PROVING SIGNAL - Flame is proved while gas valve is de-energized. Inducer will run until fault is cleared. Check for:
- Leaky gas valve - Stuck-open gas valve
23 PRESSURE SWITCH DID NOT OPEN Check for:
- Obstructed pressure tubing - Pressure switch stuck closed
24 SECONDARY VOLTAGE FUSE IS OPEN Check for: - Short circuit in secondary voltage (24VAC) wiring.
25 INVALID MODEL SELECTION OR SETUP ERROR - Indicates either the model plug is missing or incorrect or, setup switch "SW1-1" or "SW1-6" is positioned improperly. If code flashes 4 times on power-up control is defaulting to model selection stored in memory.Check for: -Thermostat call with SW1-1, SW1-6 or both SW1-1 & SW1-6 ON. - Board date code 2103 or later required to recognize model plug 007. - Proper model plug number and resistance values per wiring diagram
31 HIGH-HEAT PRESSURE SWITCH OR RELAY DID NOT CLOSE OR REOPENED - Control relay may be defective. Refer to status code #32.
32 LOW-HEAT PRESSURE SWITCH DID NOT CLOSE OR REOPENED - If open longer than five minutes, inducer shuts off for 15 minutes before retry. If opens during blower on-delay period, blower will come on for the selected blower off-delay. Check for: - Excessive wind - Restricted vent - Proper vent sizing
32 Continued: Check for: - Low inducer voltage (115 VAC)
- Defective inducer motor - Inadequate combustion air supply
- Defective pressure switch - Low inlet gas pressure (if LGPS used)
- Low inducer voltage (115 VAC)
- Disconnected or obstructed pressure tubing
33 LIMIT CIRCUIT FAULT - Indicates a limit, draft safeguard, flame rollout, or blocked vent switch (if used) is open or the furnace is operating in high-heat only mode due to 2 successive low heat limit trips. Blower will run for 4 minutes or until open switch remakes whichever is longer. If open longer than 3 minutes, code changes to lockout #13. If open less than 3 minutes status code #33 continues to flash until blower shuts off. Flame rollout switch and BVSS require manual reset. Check for: - Loose blower wheel
- Restricted vent - Proper vent sizing - Excessive wind
- Dirty filter or restricted duct system - Defective switch or connections
- Inadequate combustion air supply (Flame Roll-out Switch open)
34 IGNITION PROVING FAILURE - Control will try three more times before lockout #14 occurs. If flame signal lost during blower on-delay period, blower will come on for the selected blower off-delay. Check for:
- Oxide buildup on flame sensor (clean with fine steel wool)
- Proper flame sense microamps (.5 microamps D.C. min., 4.0 - 6.0 nominal)
- Manual valve shut-off - Low inlet gas pressure - Control ground continuity
- Gas valve defective or turned off - Flame sensor must not be grounded
- Inadequate flame carryover or rough ignition
- Green/Yellow wire MUST be connected to furnace sheet metal
41 BLOWER MOTOR FAULT - Indicates the blower failed to reach 250 RPM or the blower failed to communicate within the prescribed times limits. Thirty seconds after being turned ON or ten seconds during steady-state operation.
43 LOW-HEAT PRESSURE SWITCH OPEN WHILE HIGH-HEAT PRESSURE SWITCH IS CLOSED - Check for: - Mis-wired pressure switches
- Low-heat pressure switch stuck open - Low inlet gas pressure (if LGPS used)
- Disconnected or obstructed pressure tubing
45 CONTROL CIRCUITRY LOCKOUT Auto-reset after one hour lockout due to;
- Gas valve relay stuck open - Flame sense circuit failure - Software check error
Reset power to clear lockout. Replace control if status code repeats.

COMPONENT TEST

To initiate the component test sequence, shut OFF the room thermostat or disconnect the "R" thermostat lead. Reset power and then put setup switch "SW1-6" in the ON position to start the component test sequence. Once initiated the furnace control will turn the inducer ON at high-heat speed. The inducer motor will run for the entire test. The hot surface igniter and blower motor will be turned ON for 15 seconds each. When the blower is turned OFF the inducer will be switched to low-speed for 10 seconds. When the component test is completed one or more of the following codes will flash.

CODE	DESCRIPTION
11	Indicates the blower motor tested OK. Visual check of inducer motor and hot surface igniter required.
25	SETUP ERROR - Same as code 25 above.
41	BLOWER MOTOR FAULT - Indicates blower motor failed test. Check blower, wiring, and furnace control.

To repeat component test turn setup switch "SW1-6" OFF and then back ON. After component test is completed put setup switch "SW1-6" in the OFF position and reconnect the "R" thermostat lead.

328787-101 REV. A

A04015

Fig. 56—Service Label

4. Cycle test furnace with room thermostat.
5. Check operation of accessories per manufacturer's instructions.
6. Review User's Guide with owner.
7. Attach literature packet to furnace.

SERVICE AND MAINTENANCE PROCEDURES

⚠ WARNING

→ **FIRE, PERSONAL INJURY AND UNIT DAMAGE HAZARD**

Failure to follow this warning could result in personal injury, or death and/or property damage.

The ability to properly perform maintenance on this equipment requires certain knowledge, mechanical skills, tools, and equipment. If you do not possess these, do not attempt to perform any maintenance on this equipment other than those procedures recommended in the User's Manual.

⚠ WARNING

→ **ELECTRICAL SHOCK, FIRE OR EXPLOSION HAZARD**

Failure to follow this warning could result in personal injury or death, or property damage.

Before servicing, disconnect all electrical power to furnace. Verify proper operation after servicing.

⚠ CAUTION

→ **UNIT OPERATION HAZARD**

Failure to follow this caution may result in improper unit operation or failure of unit components.

Label all wires prior to disconnection when servicing controls. Wiring errors can cause improper and dangerous operation.

Step 1—Introduction

GENERAL

These instructions are written as if the furnace is installed in an upflow application. An upflow furnace application is where the blower is located below the combustion and controls section of the furnace, and conditioned air is discharged upward. Since this furnace can be installed in any of the 4 positions shown in Fig. 4, you must revise your orientation to component location accordingly.

ELECTRICAL CONTROLS AND WIRING

⚠ WARNING

ELECTRICAL SHOCK HAZARD

Failure to follow this warning could result in personal injury or death.

There may be more than 1 electrical supply to the furnace. Check accessories and cooling unit for additional electrical supplies that must be shut off during furnace servicing.

The electrical ground and polarity for 115-v wiring must be properly maintained. Refer to Fig. 24 for field wiring information and to Fig. 57 for furnace wiring information.

NOTE: If the polarity is not correct, the STATUS LED on the control will flash rapidly and prevent the furnace from heating. The control system also requires an earth ground for proper operation of the control and flame-sensing electrode.

The 24-v circuit contains an automotive-type, 3-amp fuse located on the control. (See Fig. 25.) Any shorts of the 24-v wiring during installation, service, or maintenance will cause this fuse to blow. If fuse replacement is required, use ONLY a 3-amp fuse. The control LED will display status code 24 when fuse needs to be replaced.

Proper instrumentation is required to service electrical controls. The control in this furnace is equipped with a Status Code LED (Light-Emitting Diode) to aid in installation, servicing, and troubleshooting. It can be viewed through the sight glass in blower access door. The amber furnace control LED is either ON continuously, rapid flashing, or a code composed of 2 digits. The first digit is the number of short flashes, the second digit is the number of long flashes.

For an explanation of status codes, refer to service label located on blower access door or Fig. 56, and the troubleshooting guide which can be obtained from your distributor.

See Fig. 62, a brief Troubleshooting Guide.

For 2-Stage Variable Speed ECM Controls the stored status codes will NOT be erased from the control memory, when 115- or 24-v power is interrupted. The control will store up to the last 7 Status Codes in order of occurence.

1. To retrieve status codes, proceed with the following:

NOTE: NO thermostat signal may be present at control, and all blower-OFF delays must be completed.

   a. Leave 115-v power to furnace turned on.
   b. Remove outer access door.
   c. Look into blower access door sight glass for current amber LED status. Removing blower access door will open blower access door switch and terminate 115-v power to control so that status code is not displayed.
   d. Remove blower access door.

NOTE: The Status Codes cannot be retrieved by disconnecting the limit switch or draft safeguard switch. To retrieve Status Codes, follow the procedure below.

2. Turn Setup Switch, SW1-1 "ON."
3. Manually close blower access door switch.
4. Control will flash up to 7 Status Codes.
5. The last Status Code, or 8th Code, will be Code 11.
6. Turn SW1-1 "OFF."
7. A continuously-lit Amber LED will appear and indicates proper operation.
8. Release blower access door switch, install blower access door and replace outer door or refer to the SERVICE label on the front of the blower access door for more information.

Component Self-Test

Component Test can ONLY be initiated by performing the following:

1. Remove outer access door.
2. Remove blower access door.
3. Remove the wire from the "R" terminal of the control board.
4. Turn Setup Switch, SW-1-6 "ON."
5. Manually close blower access door switch.

Blower access door switch opens 115-v power to control. No component operation can occur unless switch is closed. Caution must be taken when manually closing this switch for service purposes.

⚠ WARNING

→ **ELECTRICAL SHOCK HAZARD**
Failure to follow this warning could result in personal injury, or death.
Blower access switch opens 115-v power to control. No component operation can occur unless switch is closed. Caution must be exercised to avoid electrical shock from exposed electrical components when manually closing switch for service purposes. There may be more than one electrical supply to the unit. Check accessories and cooling unit for additional electrical supplies.

6. Component Test sequence will function as follows:
   a. Inducer motor starts on high-speed and continues to run until Step (d.) of component test sequence.
   b. Hot surface igniter is energized for 15 sec, then de-energized.
   c. Blower operates for 10 sec, then turns off.
   d. Inducer motor goes to low-speed for 10 seconds, then turns off.
   e. After component test is completed, one or more status codes (11, 25, or 41) will flash. See component test section of service label for explanation of status codes.

NOTE: To repeat component test, turn setup switch SW1-6 OFF then back ON.

   f. Turn setup switch SW1-6 OFF.

7. RELEASE BLOWER ACCESS DOOR SWITCH, reattach wire to "R" terminal on furnace control board, replace blower access door, and replace outer access door.

Step 2—Care and Maintenance

⚠ WARNING

→ **FIRE OR EXPLOSION HAZARD**
Failure to follow this warning could result in personal injury, death and/or property damage.
Never store anything on, near, or in contact with the furnace, such as:
1. Spray or aerosol cans, rags, brooms, dust mops, vacuum cleaners, or other cleaning tools.
2. Soap powders, bleaches, waxes or other cleaning compounds, plastic or plastic containers, gasoline, kerosene, cigarette lighter fluid, dry cleaning fluids, or other volatile fluids.
3. Paint thinners and other painting compounds, paper bags, or other paper products.
   Exposure to these materials could lead to corrosion of the heat exchangers.

For continuing high performance and to minimize possible furnace failure, periodic maintenance must be performed on this furnace. Consult your local dealer about proper frequency of maintenance and the availability of a maintenance contract.

⚠ WARNING

ELECTRICAL SHOCK AND FIRE HAZARD
Failure to follow this warning could result in personal injury, death, and/or property damage.
Turn off the gas and electrical supplies to the furnace before performing any maintenance or service. Follow the operating instructions on the label attached to the furnace.

⚠ WARNING

→ **CARBON MONOXIDE POISONING AND FIRE HAZARD**
Failure to follow this warning could result in personal injury, death and/or property damage.
Never operate furnace without a filter or with filter access door removed.

⚠ CAUTION

→ **CUT HAZARD**
Failure to follow this caution may result in personal injury.
Sheet metal parts may have sharp edges or burrs. Use care and wear appropriate protective clothing, safety glasses and gloves when handling parts, and servicing furnaces.

The minimum maintenance on this furnace is as follows:

1. Check and clean air filter each month or more frequently if required. Replace if torn.

Table 14—Filter Size Information (In.)

FURNACE CASING WIDTH	FILTER SIZE		FILTER TYPE
	Side Return	Bottom Return	
14-1/2	16 X 25 X 1	14 X 25 X 1	Cleanable*
17-1/2	16 X 25 X 1	16 X 25 X 1	Cleanable*
21	16 X 25 X 1	20 X 25 X 1	Cleanable*
24	16 X 25 X 1	24 X 25 X 1	Cleanable*

* Recommended

2. Check blower motor and wheel for cleanliness each heating and cooling season. Clean as necessary.
3. Check electrical connections for tightness and controls for proper operation each heating season. Service as necessary.
4. Inspect burner compartment before each heating season for rust, corrosion, soot or excessive dust. If necessary, have furnace and burner serviced by a qualified service agency.
5. Inspect the vent pipe/vent system before each heating season for rust, corrosion, water leakage, sagging pipes or broken fittings. Have vent pipes/vent system serviced by a qualified service agency.
6. Inspect any accessories attached to the furnace such as a humidifier or electronic air cleaner. Perform any service or maintenance to the accessories as recommended in the accessory instructions.

CLEANING AND/OR REPLACING AIR FILTER

The air filter arrangement will vary depending on the application.

NOTE: If the filter has an airflow direction arrow, the arrow must point towards the blower.

⚠ CAUTION

→ **CUT HAZARD**
Failure to follow this caution may result in personal injury.

Sheet metal parts may have sharp edges or burrs. Use care and wear appropriate protective clothing, safety glasses and gloves when handling parts, and servicing furnaces.

Media cabinet filter procedures:

NOTE: Media cabinet is included with variable speed furnace.

1. Turn off electrical supply to furnace before removing filter access door.
2. Remove filter cabinet door.
3. Slide filter out of cabinet.
4. If equipped with permanent, washable 1-inch filter, clean filter by spraying cold tap water through filter in opposite direction of airflow. Rinse filter and let dry. Oiling or coating of the filter is not recommended. See Table 14 for size information.
5. If equipped with factory-specified disposable media filter, replace only with media filter having the same part number and size. For expandable replacement media, refer to the instructions included with the replacement media. If equipped with accessory KGAFR0301ALL external filter rack, See Table 14.
6. Slide filter into cabinet.
7. Replace filter cabinet door.
8. Turn on electrical supply to furnace.

BLOWER MOTOR AND WHEEL

⚠ WARNING

ELECTRICAL SHOCK HAZARD
Failure to follow this warning could result in personal injury or death.
Blower access door switch opens 115-v power to control. No component operation can occur unless switch is closed. Caution must be taken when manually closing this switch for service purposes.

NOTE: The blower wheel should not be dropped or bent as balance will be affected.

The following steps should be performed by a qualified service agency.

To ensure long life and high efficiency, clean accumulated dirt and grease from blower wheel and motor annually.

The inducer and blower motors are pre-lubricated and require no additional lubrication. These motors can be identified by the absence of oil ports on each end of the motor.

Clean blower motor and wheel as follows:

1. Turn off electrical supply to furnace.
2. Loosen the thumbscrew on outer door and then remove outer door.
3. For downflow or horizontal furnaces having vent pipes within the furnace that pass in front of the blower access door:
   a. Disconnect vent connector from furnace vent elbow.
   b. Disconnect and remove short piece of vent pipe from within furnace.
4. Remove 2 screws from blower access door and remove blower access door.
5. Disconnect blower leads from furnace control. Record wire color and location for reassembly. All other factory wires can be left connected, but field thermostat connections may need to be disconnected depending on their length and routing.
6. Remove 2 screws holding control box to blower shelf.
7. Hang control box from front of furnace casing and away from blower compartment.
8. Remove 2 screws holding blower assembly to blower deck and slide blower assembly out of furnace.
9. Clean blower wheel and motor using a vacuum with soft brush attachment. Blower wheel blades may be cleaned with a small paint or flux brush. Do not remove or disturb balance weights (clips) on blower wheel blades.
10. Vacuum any loose dust from blower housing, wheel and motor.
11. If a greasy residue is present on blower wheel, remove wheel from the blower housing and wash it with an appropriate degreaser. To remove wheel:

NOTE: Before disassembly, mark blower mounting arms, motor, and blower housing so motor and each arm is positioned at the same location during reassembly.

   a. Disconnect ground wire attached to blower housing.
   b. Remove screws securing cutoff plate and remove cutoff plate from housing.
   c. Loosen set screw holding blower wheel on motor shaft (160+/-20 in.-lb. when assembling).
   d. Remove bolts holding motor to blower housing and slide motor out of wheel (40+/-10 in.-lb. when reassembling).

e. Remove blower wheel from housing.

f. Clean wheel and housing.

12. Reassemble motor and blower by reversing steps 11e, through 11a. Be sure to reattach ground wire to the blower housing.
13. Verify that blower wheel is centered in blower housing and set screw contacts the flat portion of the motor shaft. Loosen set screw on blower wheel and reposition if necessary.
14. Spin the blower wheel by hand to verify that the wheel does not rub on the housing.
15. Reinstall blower assembly in furnace.
16. Reinstall control box assembly in furnace.

NOTE: Refer to Fig. 57 if leads were not identified before disconnection.

17. Reconnect blower leads to furnace control. Refer to furnace wiring diagram, and connect thermostat leads if previously disconnected.
18. To check blower for proper rotation:

    a. Turn on electrical supply.

⚠ WARNING

→ **ELECTRICAL SHOCK HAZARD**
Failure to follow this warning could result in personal injury, or death.
Blower access door switch opens 115-v power to furnace control. No component operation can occur unless switch is closed. Exercise caution to avoid electrical shock from exposed electrical components when manually closing this switch for service purposes.

b. Manually close blower access door switch.

NOTE: If R-W/W1 thermostat terminals are jumpered at the time blower access door switch is closed, blower will run for 90 sec before beginning a heating cycle.

c. Perform component self-test as shown at the bottom of the SERVICE label, located on the front of blower access door.

d. Verify blower is rotating in the correct direction

19. If furnace is operating properly, RELEASE BLOWER ACCESS DOOR SWITCH. Remove any jumpers or reconnect any disconnected thermostat leads. Replace blower access door.
20. Downflow or horizontal furnaces with vent pipe through furnace only:

    a. Install and connect short piece of vent pipe inside furnace to existing vent.

    b. Connect vent connector to vent elbow.

21. Turn on gas supply and cycle furnace through one complete heating and cooling cycle. Verify the furnace temperature rise as shown in Adjustments Section. Adjust temperature rise as shown in Adjustments Section. If outdoor temperature is below 70°F, turn off circuit breaker to outdoor unit before running furnace in the cooling cycle. Turn outdoor circuit breaker on after completing cooling cycle.

CLEANING HEAT EXCHANGER

The following steps should be performed by a qualified service agency:

NOTE: If the heat exchangers get a heavy accumulation of soot and carbon, they should be replaced rather than trying to clean them thoroughly. A build-up of soot and carbon indicates that a problem exists which needs to be corrected, such as improper adjustment of manifold pressure, insufficient or poor quality combustion air, incorrect size or damaged manifold orifice(s), improper gas, or a restricted heat exchanger. Action must be taken to correct the problem.

If it becomes necessary to clean the heat exchangers because of dust or corrosion, proceed as follows:

1. Turn OFF gas and electrical power to furnace.
2. Remove outer access door.
3. Disconnect vent connector from furnace vent elbow.
4. For downflow or horizontal furnace having an internal vent pipe, remove internal vent pipe within the casing.
5. Disconnect wires to the following components. Mark wires to aid in reconnection (be careful when disconnecting wires from switches because damage may occur):

    a. Draft safeguard switch.

    b. Inducer motor.

    c. Pressure switches.

    d. Limit overtemperature switch.

    e. Gas valve.

    f. Hot surface igniter.

    g. Flame-sensing electrode

    h. Flame rollout switches.

6. Remove screws that fasten the collector box assembly to the cell panel. Be careful not to damage the collector box. Inducer assembly and elbow need not be removed from collector box.
7. Disconnect gas line from gas manifold.
8. Remove the 4 screws that attach the burner assembly to the cell panel. The gas valve and individual burners need not be removed from support assembly. Remove NOx baffles, if installed.

NOTE: Be very careful when removing burner assembly to avoid breaking igniter. See Fig. 58 and 59 for correct igniter location.

9. Using field-provided 25-caliber rifle cleaning brush, 36 in. long, 1/4″ diameter steel spring cable, a variable speed, reversible electric drill, and vacuum cleaner, clean cells as follows:

    a. Remove metal screw fitting from wire brush to allow insertion into cable.

    b. Insert the twisted wire end of brush into end of spring cable, and crimp tight with crimping tool or crimp by striking with ball-peen hammer. TIGHTNESS IS VERY IMPORTANT.

NOTE: The materials needed in item 9 can usually be purchased at local hardware stores.

(1.) Attach variable-speed, reversible drill to the end of spring cable (end opposite brush).

(2.) Insert brush end of cable into the outlet opening of cell and slowly rotate with drill. DO NOT force cable. Gradually insert cable into upper pass of cell. (See Fig. 60.)

(3.) Work cable in and out of cell 3 or 4 times to obtain sufficient cleaning. DO NOT pull cable with great force. Reverse drill and gradually work cable out.

(4.) Insert brush end of cable in burner inlet opening of cell, and proceed to clean 2 lower passes of cell in same manner as upper pass.

(5.) Repeat foregoing procedures until each cell in furnace has been cleaned.

(6.) Using vacuum cleaner, remove residue from each cell.

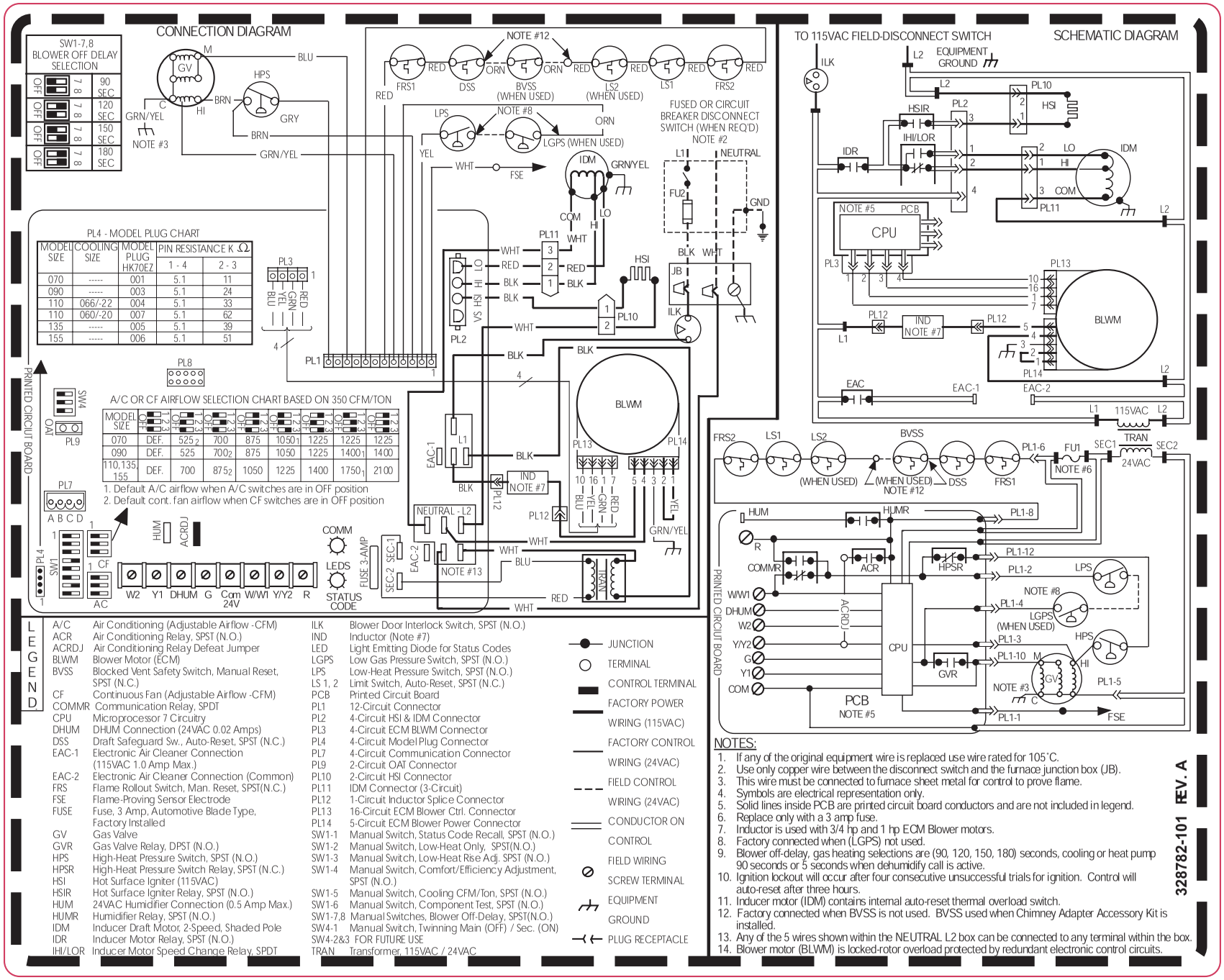

Fig. 57—Wiring Diagram

A04014

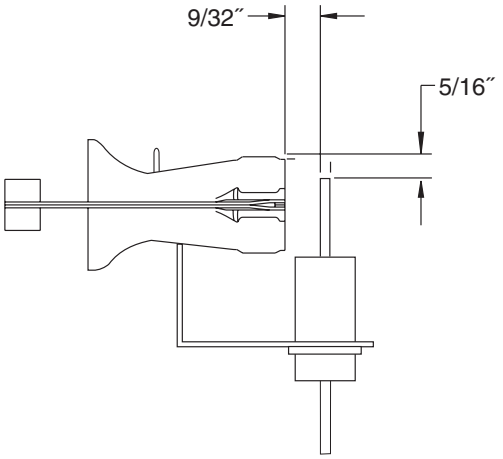

A05025

→ **Fig. 58—Igniter Position-Side View**

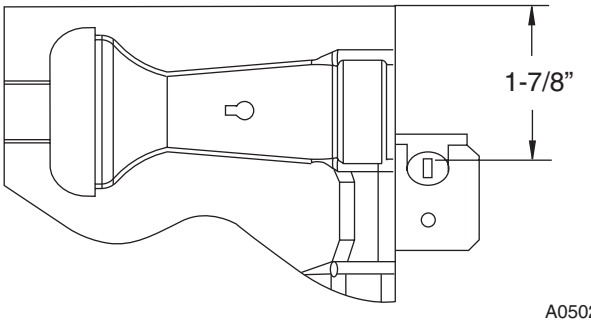

A05026

→ **Fig. 59—Igniter Position-Top View**

(7.) Using vacuum cleaner with soft brush attachment, clean burner assembly.

(8.) Clean flame sensor with fine steel wool.

(9.) Install NOx baffles (if removed).

(10.) Reinstall burner assembly. Center burners in cell openings.

10. Remove old sealant from cell panel and collector box flange.
11. Spray releasing agent on the heat exchanger cell panel where collector box assembly contacts cell panel.

NOTE: A releasing agent such as cooking spray or equivalent (must not contain corn or canola oil, aromatic or halogenated hydrocarbons or inadequate seal may occur) and RTV sealant (G.E. 162, 6702, or Dow-Corning 738) are needed before starting installation. DO NOT substitute any other type of RTV sealant. G.E. 162 (P771-9003) is available through RCD in 3-oz tubes.

12. Apply new sealant to flange of collector box and attach to cell panel using existing screws, making sure all screws are secure.
13. Reconnect wires to the following components (Use connection diagram on wiring label, if wires were not marked for reconnection locations.):
    a. Draft safeguard switch.
    b. Inducer motor.
    c. Pressure switches.
    d. Limit overtemperature switch.
    e. Gas valve.
    f. Hot surface igniter.
    g. Flame-sensing electrode.
    h. Flame rollout switches.

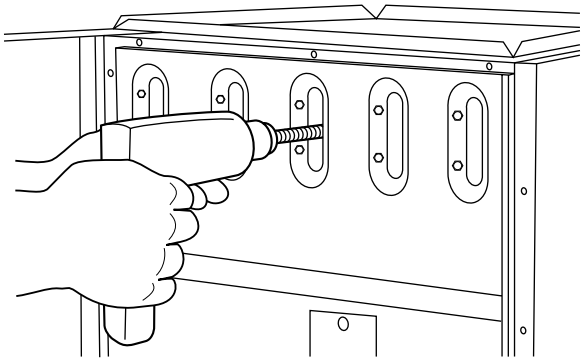

A91252

Fig. 60—Cleaning Heat Exchanger Cell

14. Reinstall internal vent pipe, if applicable.
15. Reinstall vent connector on furnace vent elbow. Securely fasten vent connector to vent elbow with 2 field-supplied, corrosion-resistant, sheet metal screws located 180° apart.
16. Replace blower access door only if it was removed.
17. Set thermostat above room temperature and check furnace for proper operation.
18. Verify blower airflow and speed changes between heating and cooling.

⚠ WARNING

→ **FIRE OR EXPLOSION HAZARD**
Failure to follow this warning could result in personal injury, death and/or property damage.

Never use a match or other open flame to check for gas leaks. Use a soap-and-water solution.

19. Check for gas leaks.

Step 3—Sequence of Operation

NOTE: Furnace control must be grounded for proper operation or else control will lock out. Control is grounded through green/yellow wire routed to gas valve and burner box screw.

Using the schematic diagram in Fig. 57, follow the sequence of operation through the different modes. Read and follow the wiring diagram very carefully.

NOTE: If a power interruption occurs during a call for heat (W/W1 or W/W1-and-W2), the control will start a 90-second blower-only ON period two seconds after power is restored, if the thermostat is still calling for gas heating. The amber LED light will flash code 12 during the 90-second period, after which the LED will be ON continuous, as long as no faults are detected. After the 90-second period, the furnace will respond to the thermostat normally.

The blower door must be installed for power to be conducted through the blower door interlock switch ILK to the furnace control CPU, transformer TRAN, inducer motor IDM, blower motor BLWM, hot-surface igniter HSI, and gas valve GV.

1. **Two-Stage Heating (Adaptive Mode) with Single-Stage Thermostat**
   See Fig. 24 or 33 for thermostat connections

NOTE: The low-heat only switch SW1-2 selects either the low-heat only operation mode when ON, (see item 2. below) or the adaptive heating mode when OFF in response to a call for heat. (See Table 8.) When the W2 thermostat terminal is energized it will always cause high-heat operation when the R-to-W circuit is closed, regardless of the setting of the low-heat only switch.

This furnace can operate as a two-stage furnace with a single-stage

thermostat because the furnace control CPU includes a programmed adaptive sequence of controlled operation, which selects low-heat or high-heat operation. This selection is based upon the stored history of the length of previous gas-heating periods of the single-stage thermostat.

The furnace will start up in either low- or high-heat. If the furnace starts up in low-heat, the control CPU determines the low-heat on-time (from 0 to 16 minutes) which is permitted before switching to high-heat.

If the power is interrupted, the stored history is erased and the control CPU will select low-heat for up to 16 minutes and then switch to high-heat, as long as the thermostat continues to call for heat. Subsequent selection is based on stored history of the thermostat cycle times.

The wall thermostat ″calls for heat″, closing the R-to-W circuit. The furnace control performs a self-check, verifies the low-heat and high-heat pressure switch contacts LPS and HPS are open, and starts the inducer motor IDM in high-speed.

a. **Inducer Prepurge Period**

(1.) If the furnace control CPU selects low-heat operation the inducer motor IDM comes up to speed, the low-heat pressure switch LPS closes, and the furnace control CPU begins a 15-second prepurge period. If the low-heat pressure switch LPS fails to remain closed the inducer motor IDM will remain running at high-speed. After the low-heat pressure switch re-closes the furnace control CPU will begin a 15-second prepurge period, and continue to run the inducer motor IDM at high-speed.

(2.) If the furnace control CPU selects high-heat operation, the inducer motor IDM remains running at high-speed, and the high-heat pressure switch relay HPSR is de-energized to close the NC contact. When sufficient pressure is available the high-heat pressure switch HPS closes, and the high-heat gas valve solenoid GV-HI is energized. The furnace control CPU begins a 15-second prepurge period after the low-heat pressure switch LPS closes. If the high-heat pressure switch HPS fails to close and the low-heat pressure switch LPS closes, the furnace will operate at low-heat gas flow rate until the high-heat pressure switch closes for a maximum of 2 minutes after ignition.

b. **Igniter Warm-Up** -At the end of the prepurge period, the Hot-Surface Igniter HSI is energized for a 17-second igniter warm-up period.

c. **Trial-For-Ignition Sequence** -When the igniter warm-up period is completed the main gas valve relay contact GVR closes to energize the gas valve solenoid GV-M. The gas valve solenoid GV-M permits gas flow to the burners where it is ignited by the HSI. Five seconds after the GVR closes, a 2-second flame proving period begins. The HSI igniter will remain energized until the flame is sensed or until the 2-second flame proving period begins.

If the furnace control CPU selects high-heat operation, the high-heat gas valve solenoid GV-HI is also energized.

d. **Flame-Proving** - When the burner flame is proved at the flame-proving sensor electrode FSE, the inducer motor IDM switches to low-speed unless the furnace is operating in high-heat, and the furnace control CPU begins the blower-ON delay period and continues to hold the gas valve GV-M open. If the burner flame is not proved within two seconds, the control CPU will close the gas valve GV-M, and the control CPU will repeat the ignition sequence for up to three more Trials-For-Ignition before going to Ignition-Lockout. **Lockout will be reset** automatically after three hours, by momentarily interrupting 115 vac power to the furnace, or by interrupting 24 vac power at SEC1 or SEC2 to the furnace control CPU (not at W/W1, G, R, etc.).

If flame is proved when flame should not be present, the furnace control CPU will lock out of Gas-Heating mode and operate the inducer motor IDM on high speed until flame is no longer proved.

e. **Blower-On delay** - If the burner flame is proven the blower-ON delays for low-heat and high-heat are as follows:

Low-heat - 45 seconds after the gas valve GV-M is opened the blower motor BLWM is turned ON at low-heat airflow.
High-heat - 25 seconds after the gas valve GV-M is opened the BLWM is turned ON at high-heat airflow.

Simultaneously, the humidifier terminal HUM and electronic air cleaner terminal EAC-1 are energized and remain energized throughout the heating cycle.

f. **Switching from Low- to High-Heat** - If the furnace control CPU switches from low-heat to high-heat, the furnace control CPU will switch the inducer motor IDM speed from low to high. The high-heat pressure switch relay HPSR is de-energized to close the NC contact. When sufficient pressure is available the high-heat pressure switch HPS closes, and the high-heat gas valve solenoid GV-HI is energized. The blower motor BLWM will transition to high-heat airflow five seconds after the furnace control CPU switches from low-heat to high-heat.

g. **Switching from High- to Low-Heat** -The furnace control CPU will not switch from high-heat to low-heat while the thermostat R-to-W circuit is closed when using a single-stage thermostat.

h. **Blower-Off Delay** - When the thermostat is satisfied, the R to W circuit is opened, de-energizing the gas valve GV-M, stopping gas flow to the burners, and de-energizing the humidifier terminal HUM. The inducer motor IDM will remain energized for a 5-second post-purge period. The blower motor BLWM and air cleaner terminal EAC-1 will remain energized at low-heat airflow or transition to low-heat airflow for 90, 120, 150, or 180 seconds (depending on selection at blower-OFF delay switches). The furnace control CPU is factory-set for a 120-second blower-OFF delay.

2. **Two-Stage Thermostat and Two-Stage Heating**
See Fig. 32 for thermostat connections.

NOTE: In this mode the low-heat only switch SW1-2 must be ON to select the low-heat only operation mode in response to closing the thermostat R-to-W1 circuit. Closing the thermostat R-to-W1-and-W2 circuits always causes high-heat operation, regardless of the setting of the low-heat only switch.

The wall thermostat ″calls for heat″, closing the R-to-W1 circuit for low-heat or closing the R-to-W1-and-W2 circuits for high-heat. The furnace control performs a self-check, verifies the low-heat and high-heat pressure switch contacts LPS and HPS are open, and starts the inducer motor IDM in high-speed.

The start up and shut down functions and delays described in item 1. above apply to the 2-stage heating mode as well, except for switching from low- to high-Heat and vice versa.

a. **Switching from Low- to High-Heat** - If the thermostat R-to-W1 circuit is closed and the R-to-W2 circuit closes, the furnace control CPU will switch the inducer motor IDM speed from low to high. The high-heat pressure switch relay HPSR is de-energized to close the NC contact. When sufficient pressure is available the high-heat pressure

Cooling Tonnage vs. Airflow (CFM)

AIR CONDITIONING TONS (12,000 BTU/HR)	AIRFLOW (CFM)	070 MODEL	090 MODEL	110, 135, & 155 MODELS
1-1/2	525	X_2	X	—
2	700	X	X_2	X
2-1/2	875	X	X	X_2
3	1050	X_1	X	X
3-1/2	1225	X_1	X_1	X
4	1400	—	X_1	X
5	1750	—	—	X_1
6	2100	—	—	X

X-INDICATES AN ALLOWABLE SELECTION.

AIR CONDITIONING (A/C) OR CONTINUOUS-FAN (CF) AIRFLOW SELECTION CHART
BASED ON 350 CFM/TON
SW1-5 ON

MODEL SIZE	SWITCH SW3 POSITIONS							
	OFF 1 2 3	OFF 1 2 3	OFF 1 2 3	OFF 1 2 3	OFF 1 2 3	OFF 1 2 3	OFF 1 2 3	OFF 1 2 3
070	DEF	525_2	700	875	1050_1	1225	1225	1225
090	DEF	525	700_2	875	1050	1225	1400_1	1400
110,135,155	DEF	700	875_2	1050	1225	1400	1750_1	2100

BASED ON 400 CFM/TON
SW1-5 ON

MODEL SIZE	SWITCH SW3 POSITIONS							
	OFF 1 2 3	OFF 1 2 3	OFF 1 2 3	OFF 1 2 3	OFF 1 2 3	OFF 1 2 3	OFF 1 2 3	OFF 1 2 3
070	DEF	600_2	800	1000	1200_1	1400	1400	1400
090	DEF	600	800_2	1000	1200	1400	1600_1	1600
110,135,155	DEF	800	1000_2	1200	1400	1600	2000_1	2200

1.DEFAULT A/C AIRFLOW WHEN A/C SWITCHES ARE IN OFF POSITION (FACTORY SETTING)
2.DEFAULT CONT. FAN AIRFLOW WHEN CF SWITCHES ARE IN OFF POSITION (FACTORY SETTING)
3. SWITCH POSITIONS ARE ALSO SHOWN ON FURNACE WIRING DIAGRAM

Fig. 61—Cooling (A/C) or Continuous-Fan (CF) Airflow Selection Chart

A03220

switch HPS closes, and the high-heat gas valve solenoid GV-HI is energized. The blower motor BLWM will transition to high-heat airflow five seconds after the R-to-W2 circuit closes.

b. **Switching from High- to Low-Heat** -If the thermostat R-to-W2 circuit opens, and the R-to-W1 circuit remains closed, the furnace control CPU will switch the inducer motor IDM speed from high to low. The high-heat pressure switch relay HPSR is energized to open the NC contact and de-energize the high-heat gas valve solenoid GV-HI. When the inducer motor IDM reduces pressure sufficiently, the high-heat pressure switch HPS will open. The gas valve solenoid GV-M will remain energized as long as the low-heat pressure switch LPS remains closed. The blower motor BLWM will transition to low-heat airflow five seconds after the R-to-W2 circuit opens.

3. **Cooling mode**
The thermostat ″calls for cooling″.

a. **Single-Speed Cooling**-
See Fig. 24 for thermostat connections
The thermostat closes the R-to-G-and-Y circuits. The R-to-Y circuit starts the outdoor unit, and the R-to-G-and-Y/Y2 circuits start the furnace blower motor BLWM on cooling airflow. Cooling airflow is based on the A/C selection shown in Fig. 61. The electronic air cleaner terminal EAC-1 is energized with 115 vac when the blower motor BLWM is operating.
When the thermostat is satisfied, the R-to-G-and-Y circuits are opened. The outdoor unit will stop, and the furnace blower motor BLWM will continue operating at cooling airflow for an additional 90 seconds. Jumper Y/Y2 to DHUM to reduce the cooling off-delay to 5 seconds. (See Fig. 25.)

b. **Single-Stage Thermostat and Two-Speed Cooling (Adaptive Mode)** -
See Fig. 33 for thermostat connections
This furnace can operate a two-speed cooling unit with a single-stage thermostat because the furnace control CPU includes a programmed adaptive sequence of controlled operation, which selects low-cooling or high-cooling operation. This selection is based upon the stored history of the length of previous cooling period of the single-stage thermostat.

NOTE: The air conditioning relay disable jumper ACRDJ must be connected to enable the adaptive cooling mode in response to a call for cooling. (See Fig. 25.) When ACRDJ is in place the furnace control CPU can turn on the air conditioning relay ACR to energize the Y/Y2 terminal and switch the outdoor unit to high-cooling.

The furnace control CPU can start up the cooling unit in either low- or high-cooling. If starting up in low-cooling, the furnace control CPU determines the low-cooling on-time (from 0 to 20

minutes) which is permitted before switching to high-cooling.
If the power is interrupted, the stored history is erased and the furnace control CPU will select low-cooling for up to 20 minutes and then energize the air conditioning relay ACR to energize the Y/Y2 terminal and switch the outdoor unit to high-cooling, as long as the thermostat continues to call for cooling. Subsequent selection is based on stored history of the thermostat cycle times.

The wall thermostat ″calls for cooling″, closing the R-to-G-and-Y circuits. The R-to-Y1 circuit starts the outdoor unit on low-cooling speed, and the R-to-G-and-Y1 circuits starts the furnace blower motor BLWM at low-cooling airflow which is the true on-board CF selection as shown in Fig. 61.
If the furnace control CPU switches from low-cooling to high-cooling, the furnace control CPU will energize the air conditioning relay ACR. When the air conditioning relay ACR is energized the R-to-Y1-and-Y2 circuits switch the outdoor unit to high-cooling speed, and the R-to-G-and-Y1-and-Y/Y2 circuits transition the furnace blower motor BLWM to high-cooling airflow. High-cooling airflow is based on the A/C selection shown in Fig. 61.

NOTE: When transitioning from low-cooling to high-cooling the outdoor unit compressor will shut down for 1 minute while the furnace blower motor BLWM transitions to run at high-cooling airflow.

The electronic air cleaner terminal EAC-1 is energized with 115 vac whenever the blower motor BLWM is operating.
When the thermostat is satisfied, the R-to-G-and-Y circuit are opened. The outdoor unit stops, and the furnace blower BLWM and electronic air cleaner terminal EAC-1 will remain energized for an additional 90 seconds. Jumper Y1 to DHUM to reduce the cooling off-delay to 5 seconds. (See Fig. 25.)

c. **Two-Stage Thermostat and Two-Speed Cooling**
See Fig. 32 for thermostat connections

NOTE: The air conditioning relay disable jumper ACRDJ must be disconnected to allow thermostat control of the outdoor unit staging. (See Fig. 25.)

The thermostat closes the R-to-G-and-Y1 circuits for low-cooling or closes the R-to-G-and-Y1-and-Y2 circuits for high-cooling. The R-to-Y1 circuit starts the outdoor unit on low-cooling speed, and the R-to-G-and-Y1 circuit starts the furnace blower motor BLWM at low-cooling airflow which is the true on-board CF (continuous fan) selection as shown in Fig. 61. The R-to-Y1-and-Y2 circuits start the outdoor unit on high-cooling speed, and the R-to-G-and-Y/Y2 circuits start the furnace blower motor BLWM at high-cooling airflow. High-cooling airflow is based on the A/C (air conditioning) selection shown in Fig. 61.
The electronic air cleaner terminal EAC-1 is energized with 115 vac whenever the blower motor BLWM is operating.
When the thermostat is satisfied, the R-to-G-and-Y1 or R-to-G-and-Y1-and-Y2 circuits are opened. The outdoor unit stops, and the furnace blower BLWM and electronic air cleaner terminal EAC-1 will remain energized for an additional 90 seconds. Jumper Y1 to DHUM to reduce the cooling off-delay to 5 seconds. (See Fig. 25.)

4. **Thermidistat Mode**
See Fig. 26-29 for thermostat connections
The dehumidification output, DHUM on the Thermidistat should be connected to the furnace control thermostat terminal DHUM. When there is a dehumidify demand, the DHUM input is activated, which means 24 vac signal is removed from the DHUM input terminal. In other words, the DHUM input logic is reversed. The DHUM input is turned ON when no dehumidify demand exists. Once 24 vac is detected by the furnace control on the DHUM input, the furnace control operates in Thermidistat mode. If the DHUM input is low for more than 48 hours, the furnace control reverts back to non-Thermidistat mode.
The cooling operation described in item 3. above also applies to operation with a Thermidistat. The exceptions are listed below:

a. **Low cooling-**When the R-to-G-and-Y1 circuit is closed and there is a demand for dehumidification, the furnace blower motor BLWM will drop the blower airflow to 86 percent of low-cooling airflow which is the true on-board CF (continuous fan) selection as shown in Fig. 61.

b. **High cooling-**When the R-to-G-and Y/Y2 circuit is closed and there is a demand for dehumidification, the furnace blower motor BLWM will drop the blower airflow to 86 percent of high-cooling airflow. High-cooling airflow is based on the A/C (air conditioning) selection shown in Fig. 61.

c. **Cooling off-delay-**When the ″call for cooling″ is satisfied and there is a demand for dehumidification, the cooling blower-off delay is decreased from 90 seconds to 5 seconds.

5. **Super-Dehumidify Mode**
Super-Dehumidify mode can only be entered if the furnace control is in the Thermidistat mode and there is a demand for dehumidification. The cooling operation described in item 3. above also applies to operation with a Thermidistat. The exceptions are listed below:

a. When the R-to-Y1 circuit is closed, R-to-G circuit is open, and there is a demand for dehumidification, the furnace blower motor BLWM will drop the blower airflow to 65 percent of low-cooling airflow for a maximum of 10 minutes each cooling cycle or until the R-to-G circuit closes or the demand for dehumidification is satisfied. Low-cooling airflow is the true on-board CF (continuous fan) selection as shown in Fig. 61.

b. When the R-to-Y/Y2 circuit is closed, R-to-G circuit is open, and there is a demand for dehumidification, the furnace blower motor BLWM will drop the blower airflow to 65 percent of high-cooling airflow for a maximum of 10 minutes each cooling cycle or until the R-to-G circuit closes or the demand for dehumidification is satisfied. High-cooling airflow is based on the A/C (air conditioning) selection shown in Fig. 61.

c. When the ″call for cooling″ is satisfied and there is a demand for dehumidification, the cooling blower-off delay is decreased from 90 seconds to 5 seconds.

6. **Continuous Blower Mode**
When the R-to-G circuit is closed by the thermostat, the blower motor BLWM will operate at continuous blower airflow. Continuous blower airflow selection is initially based on the CF (continuous fan) selection shown in Fig. 61. Factory default is shown in Fig. 61. Terminal EAC-1 is energized as long as the blower motor BLWM is energized.
During a call for heat, the furnace control CPU will transition the blower motor BLWM to continuous blower airflow, low-heat airflow, or the midrange airflow, whichever is lowest. The blower motor BLWM will remain ON until the main burners ignite then shut OFF and remain OFF for the blower-ON delay (45 seconds in low-heat, and 25 seconds in high-heat), allowing the furnace heat exchangers to heat up more quickly, then restarts at the end of the blower-ON delay period at low-heat or high-heat airflow, respectively.
The blower motor BLWM will revert to continuous-blower airflow after the heating cycle is completed. In high-heat, the furnace control CPU will drop the blower motor BLWM to

low-heat airflow during the selected blower-OFF delay period before transitioning to continuous-blower airflow.

When the thermostat ″calls for low-cooling″, the blower motor BLWM will switch to operate at low-cooling airflow. When the thermostat is satisfied, the blower motor BLWM will operate an additional 90 seconds at low-cooling airflow before transitioning back to continuous-blower airflow.

When the thermostat ″calls for high-cooling″, the blower motor BLWM will operate at high cooling airflow. When the thermostat is satisfied, the blower motor BLWM will operate an additional 90 seconds at high-cooling airflow before transitioning back to continuous-blower airflow.

When the R-to-G circuit is opened, the blower motor BLWM will continue operating for an additional 5 seconds, if no other function requires blower motor BLWM operation.

Continuous Blower Speed Selection from Thermostat -To select different continuous-blower airflows from the room thermostat, momentarily turn off the FAN switch or push-button on the room thermostat for 1-3 seconds after the blower motor BLWM is operating. The furnace control CPU will shift the continuous-blower airflow from the factory setting to the next highest CF selection airflow as shown in Fig. 61. Momentarily turning off the FAN switch again at the thermostat will shift the continuous-blower airflow up one more increment. If you repeat this procedure enough you will eventually shift the continuous-blower airflow to the lowest CF selection as shown in Table 1. The selection can be changed as many times as desired and is stored in the memory to be automatically used following a power interruption.

NOTE: If the blower-off delay is set to the maximum, the adjustable continuous-fan feature is locked (i.e., fan speed cannot be changed from its current setting).

7. **Heat pump**

   See Fig. 28-31 for thermostat connections.

   When installed with a heat pump, the furnace control automatically changes the timing sequence to avoid long blower off times during demand defrost cycles. Whenever W/W1 is energized along with Y1 or Y/Y2, the furnace control CPU will transition to or bring on the blower motor BLWM at cooling airflow, low-heat airflow, or the midrange airflow, whichever is lowest. The blower motor BLWM will remain on until the main burners ignite then shut OFF and remain OFF for 25 seconds before coming back on at heating airflow.

   When the W/W1 input signal disappears, the furnace control begins a normal inducer post-purge period while changing the blower airflow. If Y/Y2 input is still energized the furnace control CPU will transition the blower motor BLWM airflow to cooling airflow. If Y/Y2 input signal disappears and the Y1 input is still energized the furnace control CPU will transition the blower motor BLWM to low-cooling airflow. If both the Y1 and Y/Y2 signals disappear at the same time, the blower motor BLWM will remain on at low-heat airflow for the selected blower-OFF delay period. At the end of the blower-OFF delay, the blower motor BLWM will shut OFF unless G is still energized, in which case the blower motor BLWM will operate at continuous blower airflow.

8. **Component test**

   The furnace features a component test system to help diagnose a system problem in the case of a component failure. To initiate the component test procedure, ensure that there are no thermostat inputs to the control and all time delays have expired. Turn on setup switch SW1-6. (See Fig. 25.)

NOTE: The component test feature will not operate if the control is receiving any thermostat signals or until all time delays have expired.

The component test sequence is as follows:

a. The furnace control CPU turns the inducer motor ON at high-heat speed and keeps it ON through step c.

b. After waiting 10 seconds the furnace control CPU turns the hot surface igniter ON for 15 seconds, then OFF.

c. The furnace control CPU then turns the blower motor BLWM on at midrange airflow for 15 seconds, then OFF.

d. After shutting the blower motor OFF the furnace control CPU switches the inducer to low-heat speed for 10 seconds, then OFF.

NOTE: The EAC terminals are energized when the blower is operating.

After the component test is completed, 1 or more status codes (11, 25, or 41) will flash. See component test section or Service Label (Fig. 56.) for explanation of status codes.

NOTE: To repeat component test, turn setup switch SW1-6 to OFF and then back ON.

Step 4—Wiring Diagram

Refer to wiring diagram Fig. 57.

Step 5—Troubleshooting

Refer to the service label. (See Fig. 56—Service Label.)

The Troubleshooting Guide (See Fig. 62.) can be a useful tool in isolating furnace operation problems. Beginning with the word “Start,” answer each question and follow the appropriate arrow to the next item.

The Guide will help to identify the problem or failed component. After replacing any component, verify correct operation sequence.

A more detailed Troubleshooting Guide is available from your distributor.

Fig. 62—Troubleshooting Guide-Variable Speed

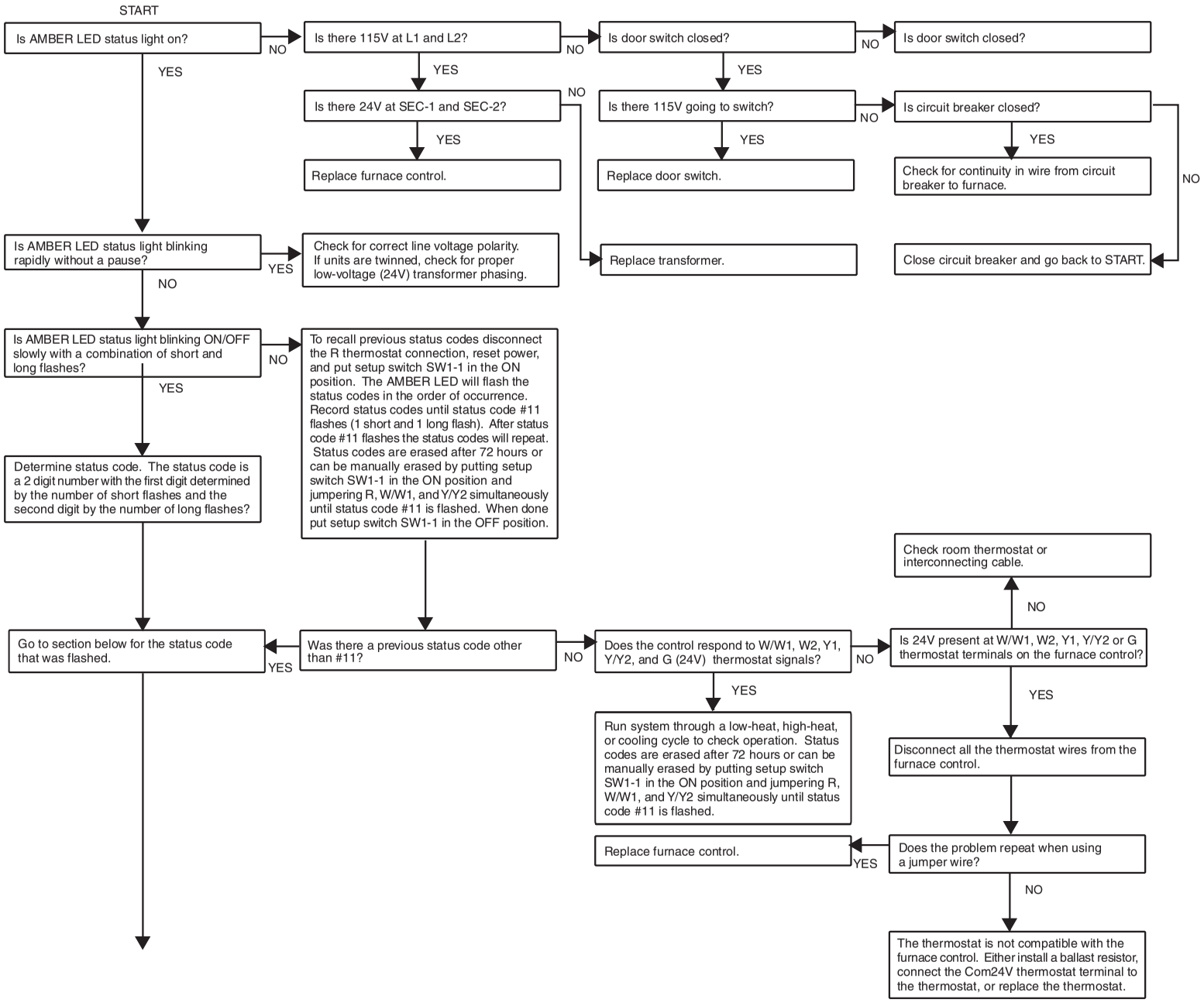

A02108b

11 NO PREVIOUS CODE – Status codes are erased after 72 hours or can be manually erased by putting setup switch SW1-1 in the ON position and jumpering R, W/W1, and Y/Y2 simultaneously until status code #11 is flashed. Run system through a low-heat, high-heat, or cooling cycle to check system.

12 BLOWER ON AFTER POWER UP – (115V OR 24V) – Normal operation. Blower runs for 90 seconds, if unit is powered up during a call for heat (R-W/W1 closed) or when (R-W/W1 opens) during the blower on-delay period.

13 LIMIT CIRCUIT LOCKOUT – Lockout occurs if the limit, draft safeguard, flame rollout, or blocked vent switch* (if used) is open longer than 3 minutes or 10 successive limit trips occurred during high-heat. Control will auto-reset after 3 hours. See code 33.

14 IGNITION LOCKOUT – System failed to ignite gas and prove flame in 4 attempts. Control will auto-reset after 3 hours. See status code 34.

15 BLOWER MOTOR LOCKOUT – Indicates the blower failed to reach 250 RPM or the blower failed to communicate within 30 seconds after being turned ON in two successive heating cycles. Control will auto-reset after 3 hours. See code 41.

21 GAS HEATING LOCKOUT – Turn off power and wait 5 minutes to retry. Check for:
- Stuck closed gas valve relay on control.
- Miswire or short to gas valve wire.

22 ABNORMAL FLAME-PROVING SIGNAL Flame is proved while gas valve is de-energized. Inducer will run until fault is cleared. Check for:
- Stuck open or leaky gas valve.

23 PRESSURE SWITCH DID NOT OPEN Check for:
- Obstructed pressure tube.
- Pressure switch stuck closed.

24 SECONDARY VOLTAGE FUSE IS OPEN Check for:
- Short circuit in secondary voltage (24V) wiring including thermostat leads. Disconnect thermostat leads to isolate short circuit.

32 LOW-HEAT PRESSURE SWITCH DID NOT CLOSE OR REOPENED – If open longer than 5 minutes, inducer shuts off for 15 minutes before retry. If opens during blower on-delay period, blower will come on for the selected blower off-delay. Check for:
- Proper vent sizing.
- Low inducer voltage (115V).
- Low inlet gas pressure (if LGPS used).
- Inadequate combustion air supply.
- Disconnected or obstructed pressure tubing.
- Defective inducer motor.
- Defective pressure switch.
- Excessive wind.
- Restricted vent.

33 LIMIT CIRCUIT FAULT – Indicates the limit, draft safeguard, flame rollout, or blocked vent shut off switch* (if used) is open or the furnace is operating in high-heat only mode due to 2 successive low-heat limit trips. Blower will run for 4 min. or until open switch remakes whichever is longer. If open longer than 3 min., code changes to lockout #13. If open less than 3 min. status code #33 continues to flash until blower shuts off. Flame rollout switch and BVSS requires manual reset. Check for:
- Dirty filter or restricted duct system.
- Loose blower wheel.
- Defective switch or connections
- Inadequate combustion air supply (flame rollout switch open).
- Restricted vent.
- Proper vent sizing.
- Excessive wind.

34 IGNITION PROVING FAILURE – If flame is not sensed during the trial for ignition period, the control will repeat the ignition sequence 3 more times before lockout #14 occurs. If flame signal is lost during the blower on-delay period, blower will come on for the selected blower off-delay. Check the following items first before proceeding to the next step.
- Gas valve turned off.
- Manual shut-off valve.
- Green/Yellow wire MUST be connected to furnace sheet metal.
- Flame sensor must not be grounded.

To determine whether the problem is in the gas valve, igniter, or flame sensor the system can be operated in component test mode. To check the igniter remove the R thermostat connection from the control, reset power, and put setup switch SW1-6 in the ON position to start the component test. Does the igniter glow orange/white by the end of the 15 second warm-up period?

NO → Unplug igniter harness from control and repeat component test by turning setup switch SW1-6 OFF and then back ON. Check for 115V between pin 3 and NEUTRAL-L2 on the control. Was 115V present for the 15 second period?
- NO → Replace furnace control.
- YES → Check for continuity in the harness and igniter. Replace defective component.

YES → Reconnect the R thermostat lead and set thermostat to call for heat. Connect voltmeter across gas valve connections. Does gas valve receive 24V?
- NO → Check connections. If OK, replace control.
- YES → Does gas valve open and allow gas to flow?
  - NO → Check that all gas valves are turned on. Replace valve.
  - YES → Do the main burners ignite?
    - NO → Check for:
      - Inadequate flame carryover or rough ignition.
      - Low inlet gas pressure.
      - Proper firing rate.
      - Blocked or incorrect carry- over gap. (.045" nominal)
    - YES → Do the main burners stay on?
      - YES → Allow blower to come on and repeat test to check for intermittent operation.
      - NO → Repeat call for heat and check flame sensor current during trial for ignition period. Is the DC microamps below 0.5?
        - NO → Check connections and retry. If current is near typical value (4.0-6.0 nominal) and burners will not stay on, repeat check in high-heat. If burners will still not stay on replace control. If burners operate in high-heat then switch to low-heat,check manifold pressure. If OK, check burner carryover and flame sensor location.
        - YES → Clean flame sensor with fine steel wool and recheck current. Nominal current is 4.0 to 6.0 microamps.
          - Is current near typical value?
            - NO → Replace electrode.
            - YES → Will main burners ignite and stay on?
              - NO → Replace furnace control.
              - YES → Fixed.

43 LOW-HEAT PRESSURE SWITCH OPEN WHILE HIGH-HEAT PRESSURE SWITCH IS CLOSED - Check for:
- Low-heat pressure switch stuck open.
- Disconnected or obstructed pressure tube.
- Miswired pressure switches.
- Low inlet gas pressure (if LGPS used).

45 CONTROL CIRCUITRY LOCKOUT Auto-reset after 1 hour lockout due to:
- Flame circuit failure.
- Gas valve relay stuck open.
- Software check error.

Reset power to clear lockout. Replace control if code repeats.

* Blocked vent shut off switch used in Chimney Adapter Kit

A02108b

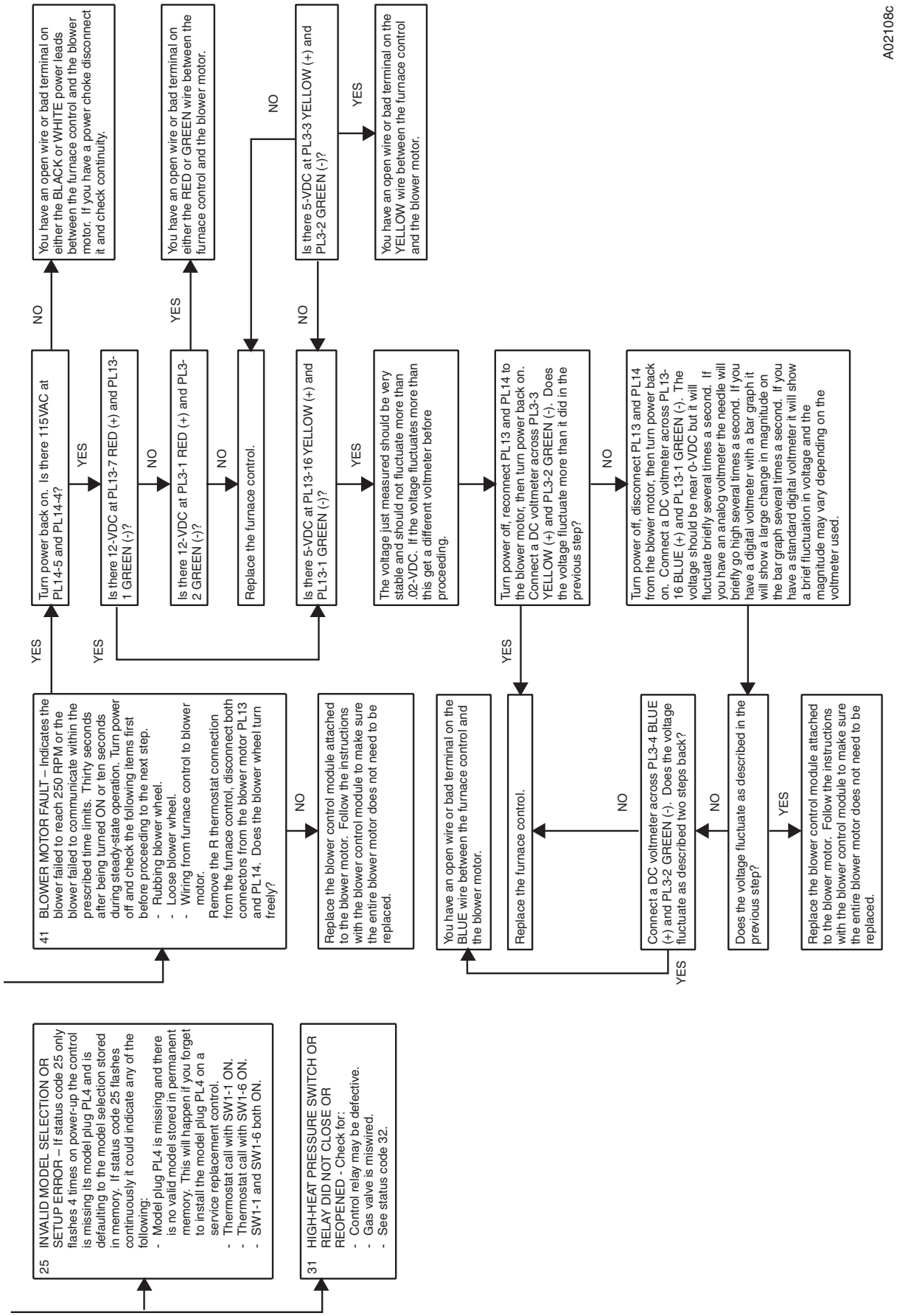

Copyright 2005 Carrier Corporation

Manufacturer reserves the right to discontinue, or change at any time, specifications or designs without notice and without incurring obligations.