58UHV, 58UXV
Upflow/Horizontal Variable-Speed, 2-Stage Induced-Combustion Gas Furnaces

Installation, Start-Up, and Operating Instructions
Sizes 060-120, Series 100

NOTE: Read the entire instruction manual before starting the installation.

This symbol → indicates a change since the last issue.

Index Page

SAFETY CONSIDERATIONS 1
Clearances to Combustibles....2
ELECTROSTATIC DISCHARGE (ESD) PRECAUTIONS PROCEDURE 2
INTRODUCTION 2
Dimensional Drawing 3
LOCATION 3-4
General 3
Location Relative to Cooling Equipment 4
Hazardous Locations....4
AIR FOR COMBUSTION AND VENTILATION....4-5
Unconfined Space 4
Confined Space....4-5
INSTALLATION....5-7
Upflow Installation 5
Horizontal Attic Installation 7
Horizontal Crawlspace Installation 7
FILTER ARRANGEMENT 7
LEVELING LEGS (IF REQUIRED) 7-8
GAS PIPING 8-9
ELECTRICAL CONNECTIONS....9-10
115-v Wiring 9-10
24-v Wiring....10
Accessories 10
VENTING 10
START-UP, ADJUSTMENT, AND SAFETY CHECK....11-21
General 11
Sequence of Operation 11-15
Adaptive Heating Mode....12
Non-Adaptive Heating Mode 12-13
Cooling Mode 13
Continuous Blower Mode....13
Heat Pump Mode....13-14
Defrost Mode 14
Set-Up Procedures 14-15
Start-Up Procedures 15
Adjustments 15-20
Set Gas Input Rate 15-17
Set Temperature Rise 17-19
Set Thermostat Heat Anticipator....19
Check Safety Controls....19-21
Checklist....21

SAFETY CONSIDERATIONS

Installation and servicing of heating equipment can be hazardous due to gas and electrical components. Only trained and qualified personnel should install, repair, or service heating equipment.

Untrained personnel can perform basic maintenance functions such as cleaning and replacing air filters. All other operations must be performed by trained service personnel. When working on heating equipment, observe precautions in the literature, on tags, and on labels attached to or shipped with the unit and other safety precautions that may apply.

→ Follow all safety codes. In the United States, refer to the National Fuel Gas Code (NFGC) NFPA No. 54-1992/ANSI Z223.1-1992. In Canada, refer to the current edition of the National Standard of Canada CAN/CGA- B149.1- and .2-M95 Natural Gas and Propane Installation Codes (NSCNGPIC). Wear safety glasses and work gloves. Have fire extinguisher available during start-up and adjustment procedures and service calls.

Recognize safety information. This is the safety-alert symbol ⚠ . When you see this symbol on the furnace and in instructions or manuals, be alert to the potential for personal injury.

Understand the signal words DANGER, WARNING, and CAUTION. These words are used with the safety-alert symbol. DANGER identifies the most serious hazards which **will** result in severe personal injury or death. WARNING signifies a hazard which **could** result in personal injury or death. CAUTION is used to identify unsafe practices which **would** result in minor personal injury or product and property damage.

These instructions cover minimum requirements and conform to existing national standards and safety codes. In some instances, these instructions exceed certain local codes and ordinances, especially those that may not have kept up with changing residential construction practices. We require these instructions as a minimum for a safe installation.

Manufacturer reserves the right to discontinue, or change at any time, specifications or designs without notice and without incurring obligations.

Table 1—Minimum Clearances To Combustible Materials (In.)

UNIT SIZE		060	080—120
UPFLOW			
Furnace Sides	Single-Wall Vent	1	0
	Type B-1 Double-Wall Vent	0	0
Furnace Back		0	0
Plenum Top		1	1
Furnace Front (See Notes)	Single-Wall Vent	6	6
	Type B-1 Double-Wall Vent	3	3
Vent	Single-Wall Vent	6	6
	Type B-1 Double-Wall Vent	1	1
HORIZONTAL POSITION (IN ALCOVE, ATTIC, AND CRAWLSPACE)			
Sides*‡		1	1
Back		0	0
Top	Single-Wall Vent	1	1
	Type B-1 Double-Wall Vent	1	1
Furnace Front† (See Notes)	Single-Wall Vent	6	6
	Type B-1 Double-Wall Vent	3	3
Vent	Single-Wall Vent	6	6
	Type B-1 Double-Wall Vent	1	1
HORIZONTAL POSITION (IN CLOSET)**			
Sides*‡		1	1
Back		0	0
Top	Single-Wall Vent	2	2
	Type B-1 Double-Wall Vent	2	2
Furnace Front (See Notes)	Single-Wall Vent	6	6
	Type B-1 Double-Wall Vent	3	3
Vent	Single-Wall Vent	6	6
	Type B-1 Double-Wall Vent	1	1

* The supply side must maintain 6-in. clearance from flue to combustible materials when using single-wall vent.
† 18-in. front clearance required for alcove.
‡ Indicates supply or return sides when furnace is in the horizontal position. Line contact only permissible between lines formed by intersection of top and two sides of furnace casing, and building joints, stud, or framing. Clearance to return side is a minimum of zero in.
** J-box must be installed on lower (bottom) inside of furnace.

NOTES:
1. Provide 30-in. front clearance for servicing. An open door in front of the furnace can meet this requirement.
2. A minimum clearance of 3 in. must be provided in front of the furnace for combustion air and proper operation.

ELECTROSTATIC DISCHARGE (ESD) PRECAUTIONS PROCEDURE

⚠ CAUTION

Electrostatic discharge can affect electronic components. Take precautions during furnace installation and servicing to protect the furnace electronic control. Precautions will prevent electrostatic discharges from personnel and hand tools which are held during the procedure. These precautions will help to avoid exposing the control to electrostatic discharge by putting the furnace, the control, and the person at the same electrostatic potential.

1. Disconnect all power to the furnace. DO NOT TOUCH THE CONTROL OR **ANY** WIRE CONNECTED TO THE CONTROL PRIOR TO DISCHARGING YOUR BODY'S ELECTROSTATIC CHARGE TO GROUND.
2. Firmly touch a clean, unpainted, metal surface of the furnace chassis which is close to the control. Tools held in a person's hand during grounding will be satisfactorily discharged.
3. After touching the chassis you may proceed to service the control or connecting wires as long as you do nothing that recharges your body with static electricity (For example: DO NOT move or shuffle your feet, DO NOT touch ungrounded objects, etc.).
4. If you touch ungrounded objects (recharge your body with static electricity), firmly touch furnace again before touching control or wires.
5. Use this procedure for installed and uninstalled (ungrounded) furnaces.
6. Before removing a new control from its container, discharge your body's electrostatic charge to ground to protect the control from damage. If the control is to be installed in a furnace, follow items 1. through 5. before bringing the control or yourself into contact with the furnace. Put all used AND new controls into containers before touching ungrounded objects.
7. An ESD service kit (available from commercial sources) may also be used to prevent ESD damage.

INTRODUCTION

The models 58UHV and 58UXV Series 100 Furnaces are available in sizes 60,000 through 117,000 Btuh input capacities.

These furnaces use variable-speed motors manufactured by General Electric (GE) and known as ICM2+ motors. They are integrated control motors, which include a pre-programmed microprocessor-based control to precisely control the selected airflow rates. The motor will be referred to as ICM2+ in the rest of this document.

The design of the upflow/horizontal gas-fired furnace is A.G.A. and C.G.A. design-certified for use with natural and propane gases and for installation on combustible wood flooring, in alcoves, attics, basements, closets, or utility rooms. The design of this furnace line is **not** A.G.A. and C.G.A. design-certified for installation in mobile homes, recreation vehicles, or outdoors.

Before installing the furnace, refer to the current edition of the NFGC. Canadian installations must be installed in accordance with NSCNGPIC and all authorities having jurisdiction. For further information, the NFGC is available from National Fire Protection Association Inc. Batterymarch Park, Quincy, MA 02269; American Gas Association, 1515 Wilson Boulevard, Arlington, VA 22209; or from Literature Distribution.

Installation must conform to the regulations of the serving gas supplier and the local building, heating, and plumbing codes in effect in the area in which the installation is made, or in the absence of local codes with the requirements of the NFGC or NSCNGPIC.

⚠ CAUTION

Application of this furnace should be indoors with special attention given to vent sizing and material, gas input rate, air temperature rise, and unit sizing. Improper installation or misapplication of the furnace can require excessive servicing or cause premature component failure.

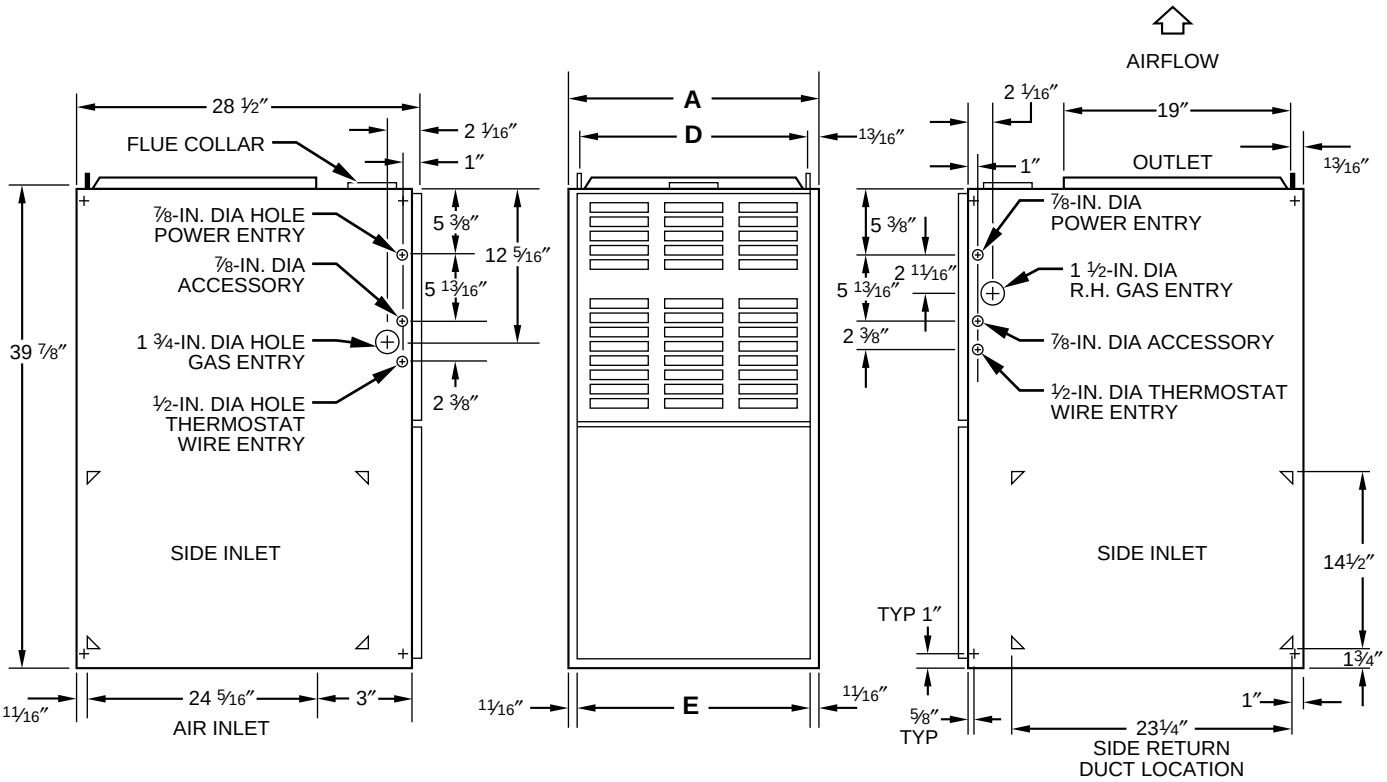

NOTES: 1. Two additional 7/8-in. dia knockouts are located in the top plate.
2. Minimum return-air opening at furnace:
a. For 800 CFM–16-in. round or 14 1/2 x 12-in. rectangle.
b. For 1200 CFM–20-in. round or 14 1/2 x 19 1/2-in. rectangle.
c. For 1600 CFM–22-in. round or 14 1/2 x 23 1/4-in. rectangle.
d. For airflow requirements above 1800 CFM, use both side inlets, a combination of 1 side inlet and the bottom, or the bottom only.

A88367

Fig. 1—Dimensional Drawing

Table 2—Dimensions (In.)

UNIT SIZE	A	D	E	FLUE COLLAR	SHIP. WT
060-12	14-3/16	12-9/16	12-11/16	4	134
080-16	21	19-3/8	19-1/2	4	154
100-20	24-1/2	22-7/8	23	4	184
120-20	24-1/2	22-7/8	23	5	194

⚠ WARNING

Improper installation, adjustment, alteration, service, maintenance, or use can cause carbon monoxide poisoning, explosion, fire, electrical shock, or other conditions which may cause personal injury or property damage. Consult a qualified installer, service agency, local gas supplier, or your distributor or branch for information or assistance. The qualified installer or agency must use only factory-authorized and listed kits or accessories when modifying this product. A failure to follow this warning can cause electrical shock, fire, personal injury, or death.

This furnace is designed for a minimum continuous return-air temperature of 60°F db or intermittent operation down to 55°F db such as when used with a night setback thermostat. Return-air temperature must not exceed 85°F db.

To aid in installation, troubleshooting, and service, a status code label is located on the blower compartment door. This label explains how to use the LED status indicator on the furnace control which is viewed through the sight glass on the door.

For high-altitude installations, the high-altitude conversion kit MUST be installed at or above 5500 ft above sea level.

For accessory installation details, refer to the applicable installation literature.

NOTE: Remove all shipping brackets and materials before operating the furnace.

Step 1—Location

GENERAL

⚠ CAUTION

Do not install furnace in a corrosive or contaminated atmosphere. Make sure all combustion and circulating air requirements are met.

⚠ CAUTION

Do not use this furnace during construction when adhesives, sealers, and/or new carpets are being installed and curing. If the furnace is required during construction, use clean outside air for combustion and ventilation. Compounds of chlorine and fluorine, when burned in combustion air, form acids which will cause corrosion of the heat exchangers and metal vent system. Some of these compounds are released from paneling and dry wall adhesives, paints, thinners, masonry cleaning materials, and many other solvents commonly used in the construction process.
Excessive exposure to contaminated combustion air will result in safety and performance related problems.

This furnace must be installed so the electrical components are protected from water.

Locate the furnace as near the center of the air distribution system and chimney or vent as possible. The furnace should be installed as level as possible. When a furnace is installed so that the supply ducts carry air to areas outside the space containing the furnace, the return air must also be handled by a duct(s) sealed to the furnace casing and terminating outside the space containing the furnace.

Provide ample space for servicing and cleaning. Always comply with the minimum fire protection clearances shown on the unit clearance label. This furnace shall not be installed directly on carpeting, tile, or any combustible material other than wood flooring.

LOCATION RELATIVE TO COOLING EQUIPMENT

The cooling coil must be installed parallel with or on the downstream side of the furnace to avoid condensation in the heat exchangers. When installed parallel with a furnace, dampers or other means used to control the flow of air must prevent chilled air from entering the furnace. If the dampers are manually operated, they must be equipped with means to prevent operation of either unit unless the damper is in the full-heat or full-cool position.

HAZARDOUS LOCATIONS

When the furnace is installed in a residential garage, it must be installed so that the burners and ignition source are located at least 18 in. above the floor. The furnace should be protected from physical damage by vehicles. When a furnace is installed in public garages, airplane hangars, or other buildings having hazardous atmospheres, the unit must be installed in accordance with the recommended good practice requirements of the National Fire Protection Association, Inc.

Step 2—Air for Combustion and Ventilation

Provisions for adequate combustion and ventilation air must be provided in accordance with Section 5.3, Air for Combustion and Ventilation, of the NFGC or applicable provisions of the local building codes.

Canadian installations must be in accordance with Section 7 of the NSCNGPIC and all authorities having jurisdiction.

⚠ CAUTION

Air for combustion must not be contaminated by halogen compounds, which include fluoride, chloride, bromide, and iodide. These elements are found in aerosol sprays, detergents, bleaches, cleaning solvents, salts, air fresheners, and other household products.

All fuel-burning equipment must be supplied with air for combustion of the fuel. Sufficient air MUST be provided to ensure there will not be a negative pressure in the equipment room or space. In addition, a positive seal MUST be made between the furnace cabinet and the return-air duct to prevent pulling air from the burner area and draft safeguard opening into the circulating air.

⚠ CAUTION

The operation of exhaust fans, kitchen ventilation fans, clothes dryers, or fireplaces could create a negative air pressure condition at the furnace. Make-up air must be provided for these devices, in addition to that required by the furnace.

The requirements for combustion and ventilation air depend upon whether the furnace is located in a CONFINED or UNCONFINED space.

UNCONFINED SPACE

An unconfined space has volume of at least 50 cu ft for each 1000 Btuh of total input for all the appliances (such as furnaces, clothes dryers, water heaters, etc.) in the space.

For Example:

58UHV AND 58UXV FURNACES HIGH-STAGE INPUT BTUH	MINIMUM SQ FT WITH 7-1/2 FT CEILING
60,000	400
80,000	534
100,000	667
117,000	780

If the unconfined space is of unusually tight construction, air for combustion and ventilation MUST come from either the outdoors or spaces freely communicating with the outdoors. Combustion and ventilation openings must be sized the same as for a confined space as defined below. Return air must not be taken from the room unless an equal or greater amount of air is supplied to the room.

CONFINED SPACE

A confined space has volume of less than 50 cu ft per 1000 Btuh of the total input rating for all appliances installed in that space. A confined space MUST have 2 permanent openings, 1 within 12 in. of the ceiling, and the other within 12 in. of the floor which freely communicate with an unconfined space or the outdoors. (See Fig. 2.)

NOTE: In determining the free area of an opening, the blocking effect of the louvers, grilles, and screens must be considered. If the free area of a louver or grille design is unknown, it may be assumed that wood louvers have a 20 percent free area, and metal louvers or grilles have a 60 percent free area. Screens, when used, must not be smaller than 1/4-in. mesh. Louvers and grilles must be constructed so they cannot be closed.

The size of the openings depends upon whether the air comes from outside of the structure or an unconfined space inside the structure.

1. All air from inside the structure:
   a. Each opening MUST have at least 1 sq in. of free area per 1000 Btuh of the total input for all equipment within the confined space, but not less than 100 sq in. per opening. (See Fig. 2.) The minimum dimension of air openings shall not be less than 3 in.

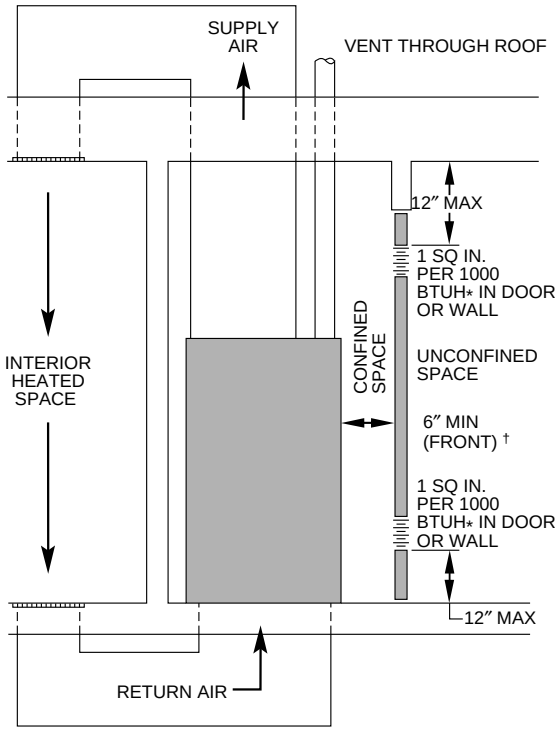

* Minimum opening size is 100 square in. with minimum dimensions of 3-In.

† Minimum of 3-In. when type-B1 vent is used.

A89012

Fig. 2—Confined Space: Air for Combustion and Ventilation from an Unconfined Space

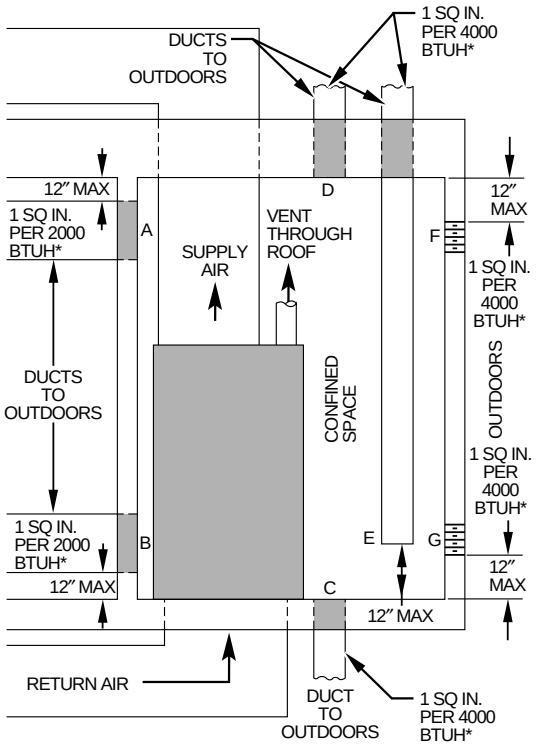

*Minimum dimensions of 3-In.

NOTE: Use any of the following combinations of openings:
A & B C & D D & E F & G

A89013

Fig. 3—Confined Space: Air for Combustion and Ventilation from Outdoors

For Example:

COMBUSTION AIR FROM UNCONFINED SPACE	
58UHV and 58UXV Furnaces High-Stage Input Btuh	Free Area per Opening (Sq In.)
60,000	100
80,000	100
100,000	100
117,000	117

b. If the building is constructed unusually tight, a permanent opening directly communicating with the outdoors should be provided. This opening shall have a minimum free area of 1 sq in. per 4000 Btuh of total input rating for all equipment in the enclosure. (See Fig. 3.)

c. If the furnace is installed on a raised platform to provide a return-air plenum, and return air is taken directly from the hallway or space adjacent to the furnace, all air for combustion must come from outdoors. (See Fig. 3.)

2. All air from outside the structure:

a. If combustion air is taken from outdoors through vertical ducts, the openings and ducts MUST have at least 1 sq in. of free area per 4000 Btuh of the total input for all equipment within the confined space. (See Fig. 3.)

For Example:

COMBUSTION AIR FROM OUTDOORS THROUGH VERTICAL DUCTS		
58UHV and 58UXV Furnaces High-Stage Input Btuh	Free Area per Opening (Sq In.)	Round Pipe (In. Dia)
60,000	15.0	5
80,000	20.0	6
100,000	25.0	6
117,000	29.3	7

b. If combustion air is taken from the outdoors through horizontal ducts, the openings and ducts MUST have at least 1 sq in. of free area per 2000 Btuh of the total input for all equipment within the confined space. (See Fig. 3.)

For Example:

COMBUSTION AIR FROM OUTDOORS THROUGH HORIZONTAL DUCTS		
58UHV and 58UXV Furnaces High-Stage Input Btuh	Free Area per Opening (Sq In.)	Round Pipe (In. Dia)
60,000	30.0	7
80,000	40.0	8
100,000	50.0	8
117,000	58.5	9

c. When ducts are used, they must be of the same cross-sectional area as the free area of the openings to which they connect. The minimum dimension of ducts must not be less than 3 in. (See Fig. 3.)

INSTALLATION

Step 1—Upflow Installation

⚠ WARNING

Do not install the furnace on its back. Safety control operation will be adversely affected. Never connect return-air ducts to the sides or back of the furnace. A failure to follow this warning could result in fire, personal injury, or death.

NOTE: Door clip on the control door may be removed for upflow installations.

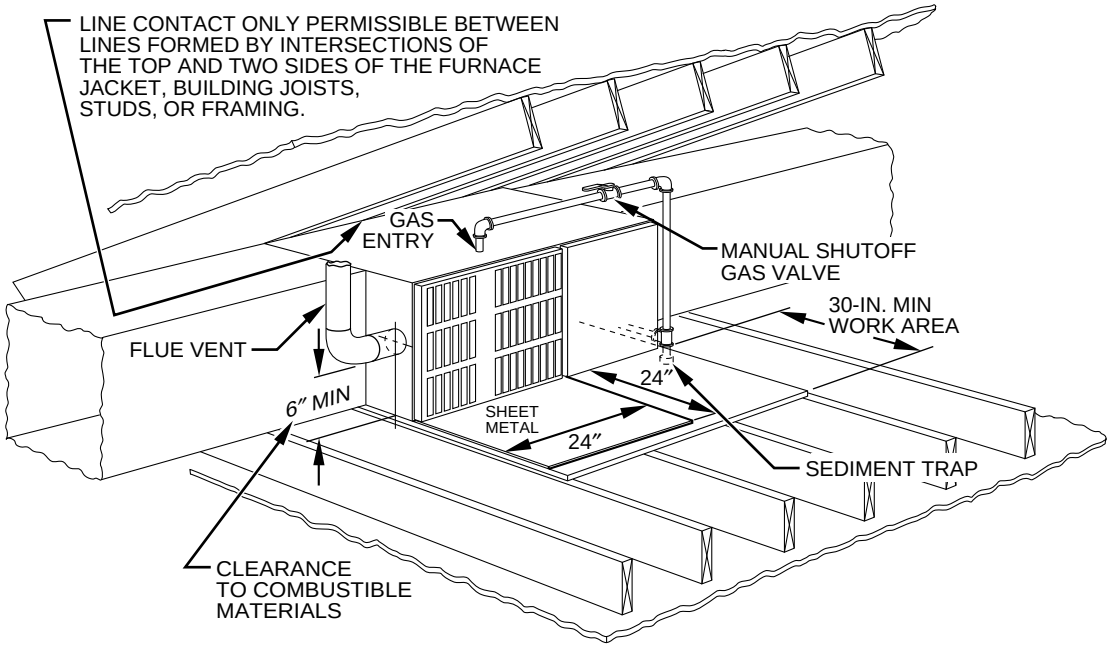

A95233

Fig. 4—Horizontal Attic Installation

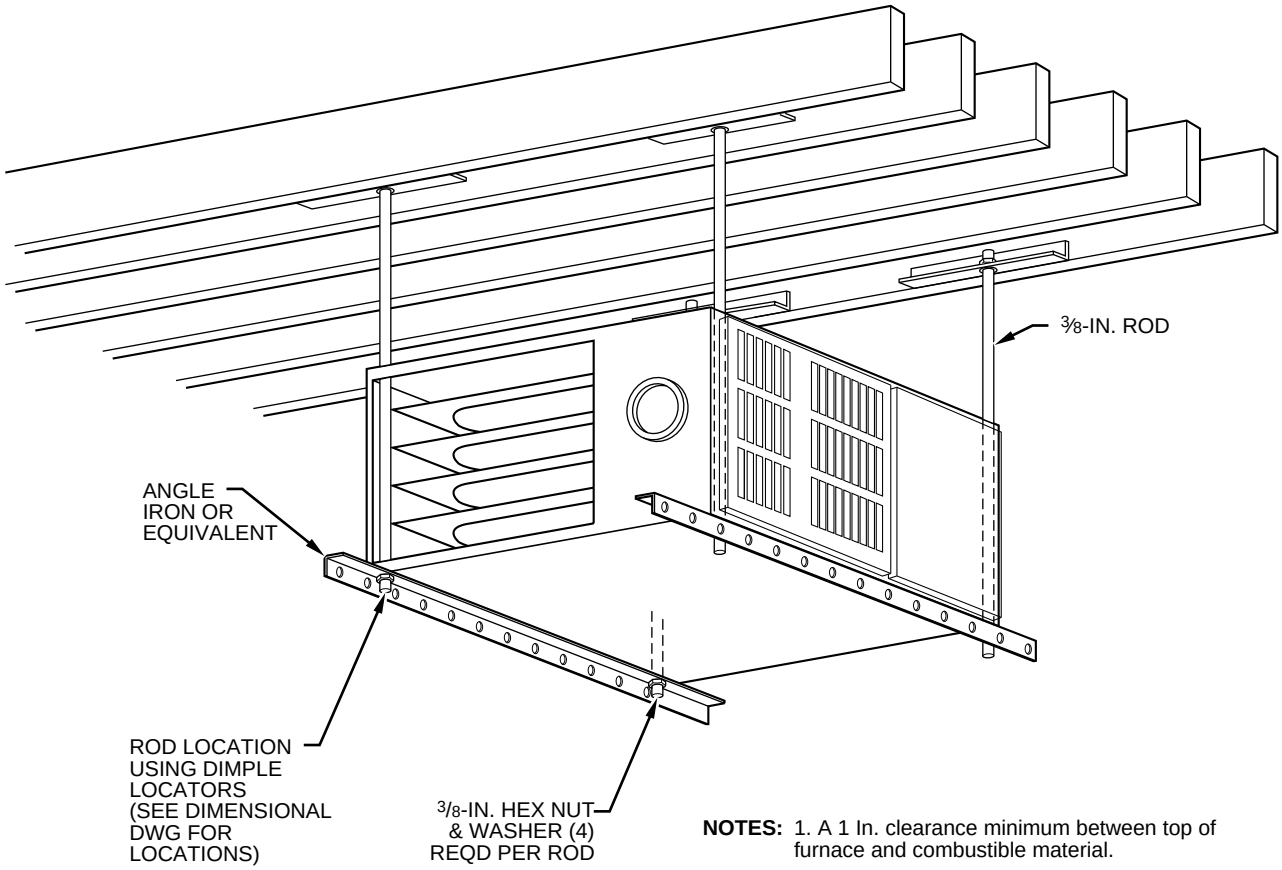

NOTES: 1. A 1 In. clearance minimum between top of furnace and combustible material.

2. The entire length of furnace must be supported when furnace is used in horizontal position.

A95234

Fig. 5—Horizontal Crawlspace Installation on Hanger Rods

1. Position furnace in desired location.
2. Connect gas supply pipe.
3. Connect supply- and return-air ducts.

Step 2—Horizontal Attic Installation

⚠ WARNING

Do not install the furnace on its back; safety control operation will be adversely affected. Never connect return-air ducts to the sides or back of the furnace. A failure to follow this warning could result in fire, personal injury, or death.

The furnace can be installed horizontally with either the left-hand (LH) or right-hand (RH) side down. A typical attic installation is shown in Fig. 4.

CONSTRUCT A WORKING PLATFORM

Construct working platform on location where all required furnace clearances are met. (See Table 1 and Fig. 4.)

INSTALL FURNACE

1. Position furnace in desired location.
2. Connect gas supply pipe. See Fig. 4 for typical piping entry.
3. Connect supply- and return-air ducts.
4. Install 24- X 24-in. sheet metal shield on platform in front of louvered control panel as shown in Fig. 4.

Step 3—Horizontal Crawlspace Installation

The furnace can be installed horizontally with either the LH or RH side down. In a crawlspace, the furnace can either be hung from the floor joist (See Fig. 5) or installed on suitable blocks or pad. (See Fig. 6.) The furnace can be suspended from each corner by hanger bolts (4 each 3/8-in. all-thread rod) cut to desired length. Use 1- X 3/8-in. flat washer, 3/8-in. lockwasher, and 3/8-in. nuts on hanger rods. (See Fig. 5.) Dimples are provided for hole locations. (See Fig. 1.)

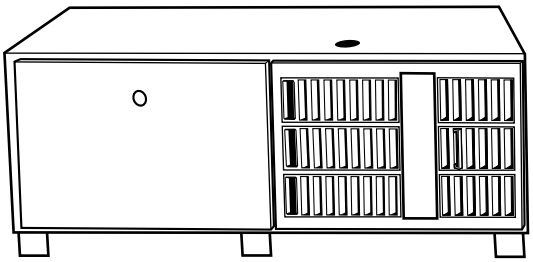

A95235

Fig. 6—Horizontal Installation on Blocks

Since the horizontal crawlspace installation is very similar to the attic, refer to Attic Installation section. The installation of a sheet metal shield in front of the louvered control panel is covered in Attic Installation section. For a crawlspace installation, this same sheet metal shield must be installed above the louvered control panel. Extend the sheet metal shield over the furnace top far enough to cover the gas pipe entry hole.

Step 4—Filter Arrangement

⚠ WARNING

Never operate unit without a filter or with filter access door removed. A failure to follow this warning could result in fire, personal injury, or death.

The factory-supplied filter(s) are shipped in the blower compartment. Determine location for the filter and move filter retaining hardware, if necessary, before attaching the return-air duct. After the return-air duct has been connected to the furnace, install the filter(s) inside the furnace blower compartment. See Fig. 7 for side return application and Fig. 8 for bottom return application.

A bottom closure panel is factory installed in the bottom of the furnace. When bottom return inlet is desired, remove and discard the enclosure panel.

Filter retaining brackets, supports, and retainers are factory assembled and shipped installed for side return application, with 1 set of all required hardware on each furnace. (See Fig. 7.)

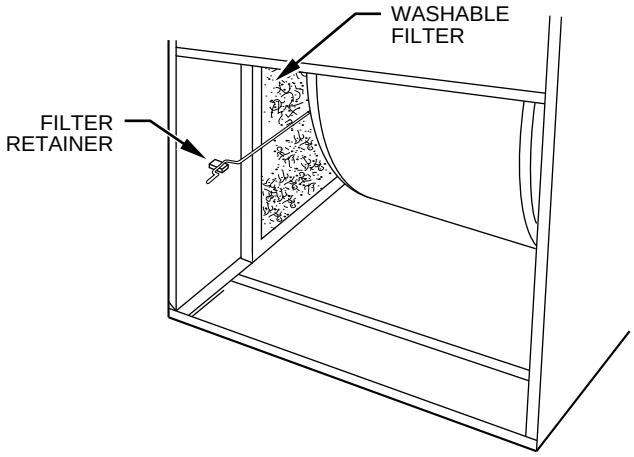

A95284

Fig. 7—Side Filter Arrangement

For bottom return applications, remove the front and back brackets and supports from each side. The back bracket(s) are installed in the rear of the furnace casing. Dimples are provided to mark mounting screw locations.

The front bracket(s) are installed on the bottom front plate, as shown in Fig. 8, once the bottom enclosure has been removed. Rotate filter side supports 180° so filter will rest on support and reinstall. Install small U-shaped end of filter retaining rod in the rear bracket. Install the front of the filter retainer rod as shown in Fig. 8. Two sets of hardware are needed for furnaces in 24-1/2 in. casings using 2 filters for bottom return. All hardware is provided for filter installation.

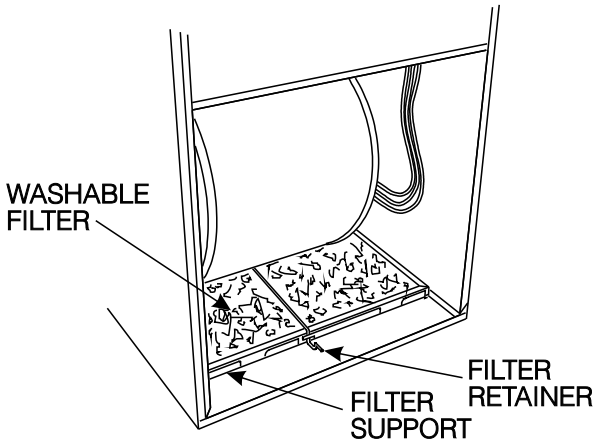

A93046

Fig. 8—Bottom Filter Arrangement

Step 5—Leveling Legs (If Required For Upflow)

When the furnace is used with side inlet(s) and leveling legs are required, refer to Fig. 9 and install field-supplied, corrosion-resistant 5/16-in. machine bolts and nuts.

Table 3—Filter Information (In.)

FURNACE CASING WIDTH	FILTER SIZE*		FILTER TYPE
	Side Return	Bottom Return	
14-3/16‡	(1) 16 X 25 X 1†	(1) 14 X 25 X 1	Cleanable
21	(1) 16 X 25 X 1	(1) 20 X 25 X 1†	Cleanable
24-1/2	(2) 16 X 25 X 1†	(1) 24 X 25 X 1	Cleanable

* Filters can be field modified by cutting the frame as marked and folding to the desired size. Alternate sizes can be ordered from your distributor or dealer.
† Factory-provided with the furnace.
‡ External side filter rack must be used for upflow right-side return.

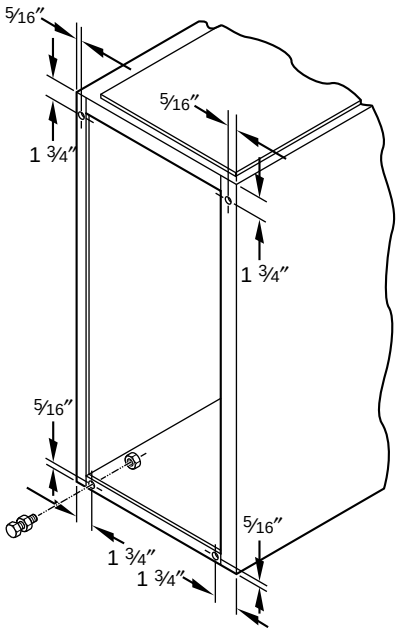

A89014

Fig. 9—Leveling Leg Installation

NOTE: The length of the bolt should not exceed 1-1/2 in.

1. Lay furnace on its back. Locate and drill 5/16-in. diameter hole in each bottom corner of furnace as shown in Fig. 9.
2. Install nut on bolt and install bolt with nut in hole. (Install flat washer if desired.)
3. Install another nut on other side of furnace base. (Install flat washer if desired.)
4. Adjust outside nut to provide desired height and tighten inside nut to secure arrangement.

Step 6—Gas Piping

⚠ CAUTION

Emissions control devices located at the heat exchanger inlets MUST be removed for propane installations (Refer to gas conversion kit for instructions).

Gas piping must be installed in accordance with national and local codes. Refer to the NFGC in U.S. Canadian installations must be installed in accordance with NSCNGPIC and all authorities having jurisdiction.

⚠ WARNING

If a flexible connector is required or allowed by the authority having jurisdiction, black iron pipe shall be installed at the furnace gas control valve and extend a minimum of 2 in. outside the furnace casing. A failure to follow this warning could result in fire, personal injury, or death.

The gas supply line should be a separate line running directly from the gas meter to the furnace, if possible. Refer to Table 4 for the recommended gas pipe size. Risers must be used to connect to the furnace and the meter.

Piping should be pressure tested in accordance with local and national plumbing and gas codes BEFORE the furnace has been attached. If the test pressure exceeds 0.5 psig (14-in. wc), the gas supply pipe must be disconnected from the furnace and capped before the pressure test. If the test pressure is equal to or less than 0.5 psig (14-in. wc), close the manual shutoff valve before the test. (See Fig. 10.) It is recommended that the ground joint union be loosened before pressure testing. After all connections have been made, purge the lines and check for leakage with regulated gas supply pressure.

Install a sediment trap in the riser leading to the furnace. The trap can be installed by connecting a tee to the riser leading from the furnace. Connect a capped nipple into the lower end of the tee. The capped nipple should extend below the level of the gas controls. (See Fig. 10.)

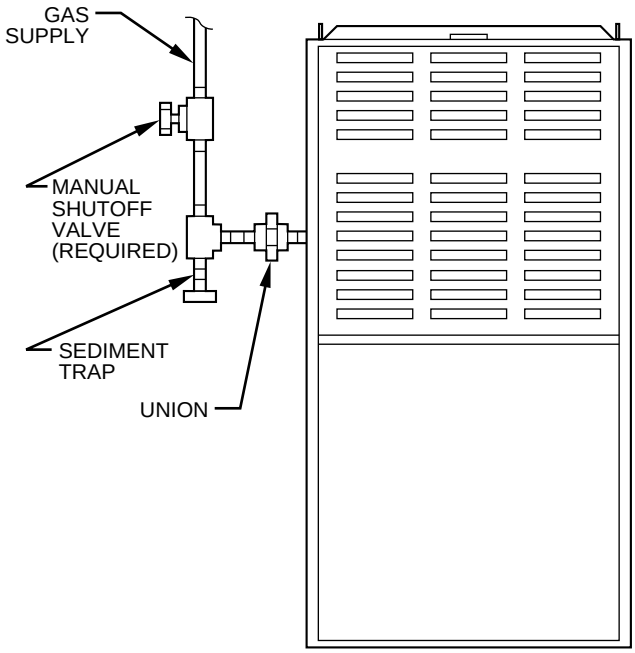

A89417

Fig. 10—Typical Gas Pipe Arrangement

Table 4—Maximum Capacity of Pipe*

NOMINAL IRON PIPE SIZE (IN.)	INTERNAL DIAMETER (IN.)	LENGTH OF PIPE (FT)				
		10	20	30	40	50
1/2	0.622	175	120	97	82	73
3/4	0.824	360	250	200	170	151
1	1.049	680	465	375	320	285
1-1/4	1.380	1400	950	770	660	580
1-1/2	1.610	2100	1460	1180	990	900

* Cubic ft of gas per hr for gas pressures of 0.5 psig (14-in. wc) or less, and a supply line pressure drop of 0.5-in. wc (based on a 0.60 specific gravity gas). Ref: Table 10-2, NFGC.

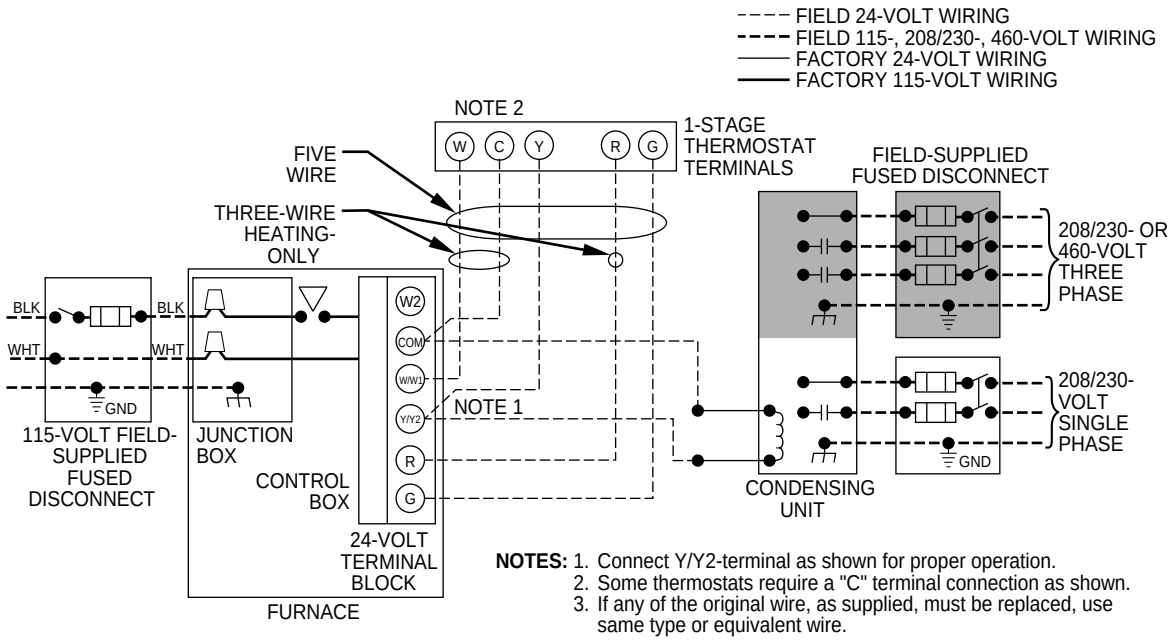

Fig. 11—Heating and Cooling Application Wiring Diagram 1-Stage Thermostat and Condensing Unit

Apply joint compound (pipe dope) sparingly and only to the male threads of each joint. The compound must be resistant to the action of propane gas.

Install an accessible manual shutoff valve upstream of the furnace gas controls and within 72 in. of the furnace. A 1/8-in. NPT plugged tapping is provided on the gas valve for test gage connection. Installation of an additional 1/8-in. NPT plugged tapping, accessible for test gage connection, installed immediately upstream of the gas supply connection to the furnace and downstream of the manual shutoff valve, is not required. Place ground joint union between the gas control manifold and the manual shutoff valve.

⚠ WARNING

Use the proper length of pipes to avoid stress on the gas control manifold. A failure to follow this warning can cause a gas leak resulting in a fire, explosion, personal injury, or death.

⚠ CAUTION

Use a backup wrench at the furnace gas control when connecting the gas pipe to the furnace to avoid damaging gas controls or manifold.

⚠ WARNING

Never purge a line into a combustion chamber. Never use matches, candles, flame, or other sources of ignition for the purpose of checking leakage. Use a soap-and-water solution to check for leakage. A failure to follow this warning can cause a fire, explosion, personal injury, or death.

Step 7—Electrical Connections

115-V WIRING

Refer to the unit rating plate or Table 5 for equipment electrical requirements. The control system requires an earth ground for proper operation.

⚠ CAUTION

Do not connect aluminum wire between disconnect switch and furnace. Use only copper wire.

→ Make all electrical connections in accordance with the National Electrical Code (NEC) ANSI/NFPA 70-1996 and local codes or ordinances that might apply. For Canadian installations, all electrical connections must be made in accordance with CSA C22.1 Canadian Electrical Code, or authorities having jurisdiction.

Table 5—Electrical Data

UNIT SIZE	VOLTS—HERTZ—PHASE	OPERATING VOLTAGE RANGE		MAX UNIT AMPS	MIN WIRE GAGE	MAX WIRE LENGTH (FT)‡	MAX FUSE OR HACR-TYPE CKT BKR AMPS†
		Max*	Min*				
060-12	115—60—1	127	104	10.1	14	36	15
080-16	115—60—1	127	104	10.6	14	34	15
100-20	115—60—1	127	104	12.6	14	29	15
120-20	115—60—1	127	104	13.9	14	26	15

* Permissible limits of the voltage range at which the unit will operate satisfactorily.
† Time-delay fuse is recommended.
‡ Length shown is as measured along wire path between unit and service panel for maximum 2 percent voltage drop.

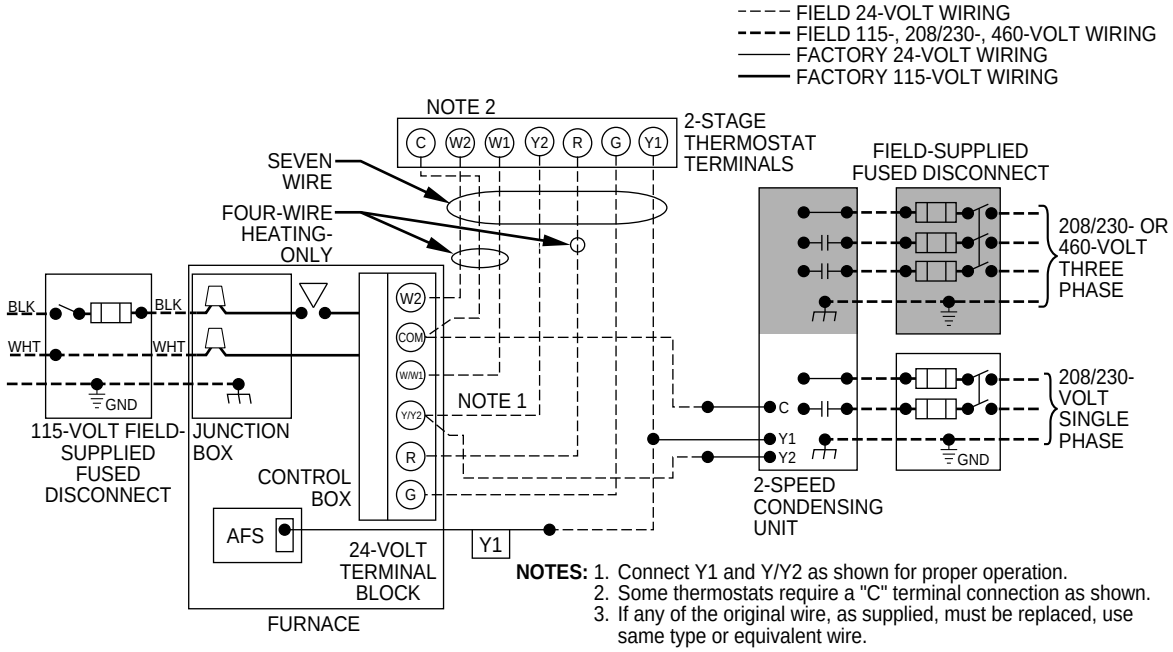

→ **Fig. 12—Heating and Cooling Application Wiring Diagram 2-Stage Thermostat and Condensing Unit**

⚠ WARNING

→ The cabinet MUST have an uninterrupted or unbroken ground according to NEC ANSI/NFPA 70-1996 and Canadian Electrical Code, CSA C22.1 or local codes to minimize personal injury if an electrical fault should occur. This may consist of electrical wire or conduit approved for electrical ground when installed in accordance with existing electrical codes. Do not use gas piping as an electrical ground.

The junction box can be moved to the left-hand side of the furnace when a left-hand side power supply is desired. Remove the 2 screws holding the junction box. Mount the junction box on the left-hand side of the furnace. Holes have been provided in casing. When moved, tuck the wiring harness behind the clip provided to keep extra wire lengths out of the way.

NOTE: Proper polarity must be maintained for 115-v wiring. If polarity is incorrect, the furnace control status LED will flash rapidly and prevent heating operation.

24-V WIRING

Refer to ESD Precautions Procedure before proceeding with 24-v connections.

Make field 24-v connections at the 24-v terminal block. (See Fig. 13.) Connect terminal Y/Y2 as shown in Fig. 11 or 12 for proper cooling operation. Use only AWG No. 18 or larger, color-coded copper thermostat wire.

The 24-v circuit contains an automotive-type, 3-amp fuse located on the main control. Any 24-v electrical shorts during installation, service, or maintenance could cause this fuse to blow. If fuse replacement is required, use ONLY a 3-amp fuse. The control will flash code 24 when the fuse needs replacement.

ACCESSORIES

1. Electronic air cleaner (EAC)

   A terminal block (EAC-1 [hot] and EAC-2 [neutral]) is provided for EAC connection. (See Fig. 13.) The terminals are energized with 115v, 1-amp maximum during blower motor operation.

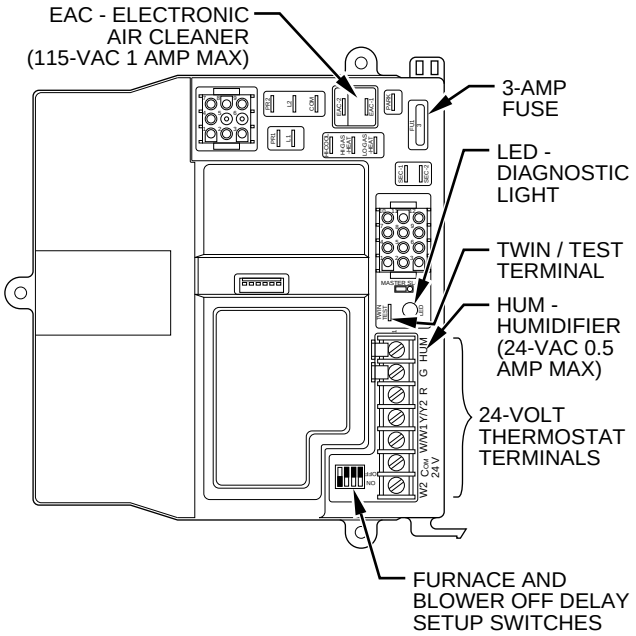

Fig. 13—Furnace Control

2. Humidifier (HUM)

   Screw terminals (HUM and COM 24V) are provided for 24-v humidifier connection. The terminals are energized with 24v, 0.5-amp maximum when the gas valve is energized.

Step 8— Venting

Refer to the enclosed Installation Instructions, GAMA Venting Tables for Category I Furnaces, and Venting for 2-stage Category I fan-assisted furnaces. In Canada use venting tables found in CAN/CGA B149.1 or .2-M91 Amendment No. 1. The horizontal portion of the venting system shall maintain a minimum of 1/4-in. upward slope per linear ft (away from furnace), and it shall be rigidly supported every 5 ft or less with hangers or straps to ensure that there will be no movement after installation.

Table 6—Setup Switch Description

SETUP SWITCH NO.	NORMAL POSITION	DESCRIPTION OF USE
SW-1 Only High-Gas Heat	OFF (Staged Gas Heat)	Turn switch on to obtain only high-gas-heat operation on any call for heat regardless of whether R-W/W1, or R-W/W1, -W2 is closed. SW-1 overrides SW-2.
SW-2 Low-Gas Heat (Adaptive Mode)	OFF (Single-Stage Thermostat)	Turn switch off for installations with single-stage thermostats; control selects low-gas-heat or high-gas-heat operation based on previous cycles. Turn switch on for installations with 2-stage thermostats to permit only low-gas-heat operation in response to closing R-W/W1. High-gas heat is supplied only when R to W/W1 and W2 are closed.
SW-3 and SW4	ON, OFF	Switches control gas heating mode blower-off delay. (See Table 7.)

Step 9—Start-Up, Adjustment, and Safety Check

GENERAL

The furnace must have a 115-v power supply properly connected and grounded. Correct polarity must be maintained to enable gas heating operation.

The gas service pressure must not exceed 0.5 psig (14-in. wc), and no less than 0.16 psig (4.5-in. wc).

Thermostat wire connections at R and W/W1 are the minimum required for gas heating operation. W2 must be connected for 2-stage heating thermostats. Y/Y2 and G are required to be connected to the furnace for cooling and heat pumps. G is required for continuous-fan. COM 24V is required for some clock thermostats. These connections must be made at the 24-v terminal block on the furnace control. (See Fig. 13.) O is required for heat pumps only. Y1 is required for 2-stage cooling and 2-stage heat pumps. The O and Y1 connectors must be made to the ICM2+ furnace's orange and blue leads, flagged "O" and "Y1," respectively.

This furnace can be installed with either a single-stage heating or a 2-stage heating thermostat.
For single-stage thermostats, connect thermostat R to W/W1 at the furnace control terminal block. (See Fig. 11.) For single-stage thermostats, the control will determine, based on length of previous heating on and off cycles, when to operate in low- and high-stage for optimum comfort. Setup switch-2 (SW-2) must be in the factory-shipped OFF position. See Fig. 14 and Tables 6 and 7 for setup switch information.

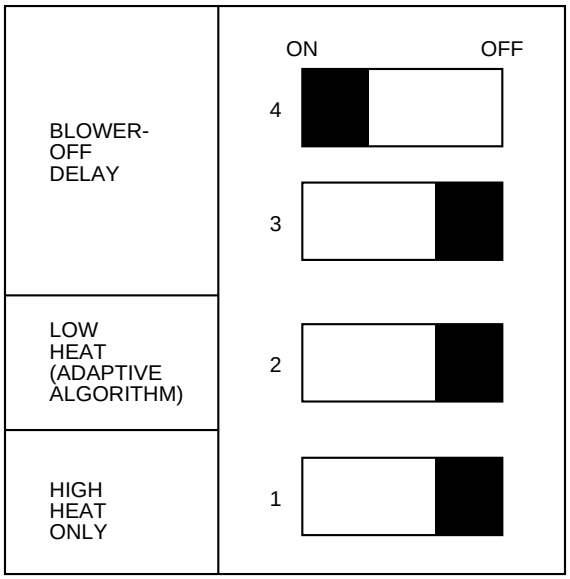

A93377

Fig. 14—Setup Switches on Furnace Control (Factory Settings)

Table 7—Blower-Off Delay Setup Switch (SW) Position

DESIRED HEATING MODE BLOWER-OFF DELAY (SEC)	SETUP SWITCH	
	SW-3	SW-4
90	OFF	OFF
135	OFF	ON
180	ON	OFF
225	ON	ON

If a 2-stage heating thermostat is to be used, move SW-2 to the ON position at the end of the furnace installation. This overrides the built-in control process for selecting high- and low-stage and allows the 2-stage thermostat to select gas heating modes. The W2 from the thermostat must be connected to W2 on the control terminal block. (See Fig. 12.)

⚠ CAUTION

This furnace is equipped with a manual reset limit switch in the gas control area. The switch will open and shut off power to the gas valve if a flame rollout or overheating condition occurs in the gas control area. DO NOT bypass the switch. Correct inadequate combustion-air supply, component failure, or restricted flue gas passageway before resetting the switch.

Before operating the furnace, check each manual reset switch for continuity. If necessary, press and release the button to reset the switch.

SEQUENCE OF OPERATION

Using the schematic diagram in Fig. 16, follow the sequence of operation through the different modes. Read and follow the diagram very carefully.

NOTE: The GE ICM2+ BLWM speeds are infinitely variable from 300 to 1400 rpm and are dynamically controlled to precisely control airflow rate (CFM). The ICM2+ motor ramps to speed at a controlled rate to reduce start-up noise perception (4 to 11 sec, depending on the target CFM). The ICM2+ motor ramps down slowly to a stop in the same time as the ramp-up time. ICM2+ ramp-up and ramp-down times are additive to blower-on and -off delays, respectively. The ICM2+ is 115-v energized whenever power is available at the furnace control, but operates only when the 24-v motor control input(s) are on.

NOTE: If a power interruption occurs during a call for heat (W/W1 or W/W1 and W2) and if the thermostat is still calling for gas heating, the control will start a 90-sec blower only on period 2 sec after power is restored. The red LED will flash code 12 during the 90-sec period, after which the LED will be on continuously as long as no faults are detected. The ICM2+ motor will operate at low-gas heat CFM after a power interruption in

either low- or high-stage. After the 90-sec period, the furnace will respond to the thermostat normally.

The blower door must be installed for power to be conducted through the blower door interlock switch (ILK) to the furnace control (CPU), transformer (TRAN), inducer motor (IDM), blower motor (BLWM), hot surface ignitor (HSI), and gas valve (GV).

1. Adaptive Heating Mode—Single-Stage Thermostat with 2-Stage Heating (See Fig. 11 for thermostat connections.)

NOTE: In response to thermostat call for heat R to W/W1, the control selects high-stage heating only with HIGH HEAT ONLY switch (SW1) set to ON regardless of the LOW HEAT switch (SW2) setting. With the HIGH HEAT ONLY switch set to OFF, the LOW HEAT switch selects either the low-stage heating only mode when set to ON, or the adaptive heating mode when set to OFF in response to a thermostat call for heat R to W/W1. (See Fig. 14 for description of switch settings or Fig. 16 for control circuit diagram.)

This furnace can operate as a 2-stage furnace with a single-stage thermostat because the furnace control CPU includes a programmed adaptive sequence of controlled operation, which selects low- or high-stage gas heat operation. This selection is based upon the stored history of the lengths of previous gas heating on/off periods of the single-stage thermostat.

The furnace will start up in either low- or high-stage gas heat. If the furnace starts up in low-stage, the control CPU determines the low-stage on time (from 0 to 16 minutes) which is permitted before switching to high-stage.

If the power is interrupted, the stored history is erased. When this happens, the control CPU selects low-stage for 16 minutes and then switches to high-stage, as long as the thermostat continues to call for heat. Subsequent selection is based on stored history of the thermostat cycle times.

When the thermostat calls for heat, R-W/W1 circuit closes. The furnace control performs a self-check, verifies that the pressure switch contacts for low- and high-stage (LPS and HPS) are open, and starts the IDM in low speed or high speed as appropriate.

a. Inducer prepurge period—A 15 sec prepurge period begins when LPS contacts close. For high-stage operation, both LPS and HPS must be closed. For low-stage operation, only LPS must be closed.

b. Ignitor warm-up—At the end of the prepurge period, the HSI is energized for a 17-sec ignitor warm-up period.

c. Trial-for-ignition sequence—When the ignitor warm-up period is completed, the main gas valve relay contacts (MGVR-1 and -2) (and high-heat pressure switch relay HPSR for high-stage operation) close to energize low-(and high-) stage the gas valve solenoid(s) (GV) and the humidifier terminal (HUM). The gas valve opens, and 24-v power is supplied for a field-installed humidifier at terminals HUM and COM 24V. The GV permits gas flow to the burners where it is ignited. After 5 sec, the HSI is de-energized, and a 2-sec flame-proving period begins.

If the HPS fails to close on a call for high-stage gas heat and the LPS closes, the furnace operates at low-stage gas flow rate until the HPS closes.

d. Flame-proving—When the burner flame is proved at the flame-proving sensor electrode (FSE), the control CPU begins the blower-on delay period and continues to hold the GV open. If the burner flame is not proved within 2 sec, the control CPU closes the GV, and the control CPU repeats the ignition sequence for up to 3 more trials-for-ignition before going to ignition lockout. The CONTROL TERMINATES LOCKOUT AUTOMATICALLY after 3 hrs, or by momentarily interrupting 115-v power to the furnace, or by interrupting 24-v power at SEC1 or SEC2 to the control CPU (not at W/W1, G, R, etc.). Opening the thermostat R-W circuit will not terminate an ignition lockout.

If flame is proved when flame should not be present, the control CPU locks out of gas heating mode and operates the IDM on high speed until flame is no longer proved.

e. Blower-on delay—If the burner flame is proved, 45 sec after the GV is opened the BLWM is energized at the appropriate heating airflow: low- or high-stage CFM. Simultaneously, the terminals EAC-1 and EAC-2 are energized with 115v and remain energized as long as BLWM is energized.

f. Switching from low- to high-stage gas heat—If the furnace control CPU switches from low- to high-stage, the control CPU switches the IDM speed from low to high. The high-heat pressure switch relay (HPSR) closes. When the IDM provides sufficient pressure to close the HPS, the high-stage gas valve solenoid GV is energized. The BLWM switches to high-stage airflow 5 sec after the control CPU switches from low-gas heat to high-gas heat.

g. Switching from high- to low-stage gas heat—The control CPU will not switch from high- to low-stage while the thermostat R-W circuit is closed when a single-stage thermostat is used.

→ h. Blower-off delay—When the thermostat is satisfied, the R-W circuit is opened, the GV is de-energized, stopping gas flow to the burners, and terminals HUM and COM 24V are de-energized. The IDM remains energized for a 5 sec post-purge period. The BLWM, which had been operating at low- or high-stage airflow, will operate at low-stage airflow for 90 sec.

(1.) When in low-stage gas heat and the thermostat is satisfied, the blower will continue to operate at the low-stage gas heat CFM until the blower-off delay reaches 90 sec. If the blower-off delay switches (on the 2-stage furnace control) are set for more than 90 sec, the blower will operate at the selected continuous fan CFM for the remaining blower-off delay time.

(2.) When in high-stage gas heat and the thermostat is satisfied, the blower will continue to operate at the high-stage gas heat CFM until the blower-off delay expires, for all settings of the gas heat blower-off delay switches on the 2-stage furnace control.

i. The furnace control is factory set for a 135-sec blower-off delay.

2. Non-Adaptive Heating Mode—Two-Stage Thermostat and 2-Stage Heating (See Fig. 12 for thermostat connections).

NOTE: In response to thermostat call for heat R to W/W1 and with HIGH HEAT ONLY switch SW1 set to OFF, the control selects low-stage heating only with LOW HEAT switch SW2 set to ON, or the control selects adaptive heating mode with LOW HEAT switch SW2 set to ON. The control selects high-stage heating only with HIGH-HEAT ONLY switch SW1 set to ON. In response to thermostat call for high-stage heat R to W1 and W2, the control selects high-stage heating regardless of switch SW1 and SW2 settings. See Fig. 14 for description of switch settings or Fig. 16 for control circuit diagram.

The start-up and shutdown functions and delays described in item 1. apply to the 2-stage heating mode as well, except for switching from low- to high-stage and vice versa.

a. When the thermostat calls for heat, the R-W/W1 circuit closes for low-stage or the R to W1-and-W2 circuits close for high-stage. The furnace control performs a self-check, verifies pressure switch contacts for low- and high-stage LPS and HPS are normally open, and starts the IDM in low speed or high speed as appropriate.

b. Switching from low- to high-stage gas heat—If the thermostat R-W/W1 circuit for low-stage is closed and the R-W2 circuit for high-stage closes, the control CPU switches the IDM speed from low to high. The HPSR closes. When the IDM provides sufficient pressure to close the HPS, the high-stage gas valve solenoid GV is energized. The BLWM switches to high-stage airflow 5 sec after the R-W2 circuit closes.

c. Switching from high- to low-stage gas heat—If the thermostat R-W2 circuit for high-stage opens and the R-W/W1 circuit for low-stage remains closed, the control CPU switches the IDM speed from high to low. The HPSR opens to de-energize the high-stage gas valve solenoid GV. When the IDM reduces pressure sufficiently, the HPS opens. The low-stage gas valve solenoid GV remains energized as long as the LPS remains closed. The BLWM switches to low-stage airflow 5 sec after the R-W2 circuit opens.

3. Cooling Mode

a. Single-Speed Cooling Outdoor Unit (See Fig. 11 for thermostat connections.)

(1.) The thermostat closes the R to G-and-Y circuits. The R-Y circuit starts the outdoor unit, and the R to G-and-Y/Y2 circuits start the furnace BLWM on cooling speed.

(2.) The terminals EAC-1 and EAC-2 are energized with 115v when the BLWM is operating.

(3.) When the thermostat is satisfied, the R to G-and-Y circuits are opened. The outdoor unit stops, and the furnace BLWM continues operating at cooling airflow for an additional 90 sec.

b. Two-Speed Cooling Outdoor Unit (See Fig. 12 for thermostat connections.)

(1.) The thermostat closes the R to G-and-Y1 circuits for low cooling or closes the R to G-and-Y1-and-Y/Y2 circuits for high cooling. The R to Y1 circuit operates the outdoor unit on low cooling speed. The R to G-and-Y1 circuit operates the furnace BLWM at low cooling airflow (65% of single-speed cooling airflow; different airflow than for low-gas heat). The R to Y1-and-Y2 circuits operate the outdoor unit on high-cooling airflow, and the R to G-and-Y/Y2-and-Y1 circuits operate the furnace BLWM at high-cooling airflow. Two-speed high-cooling airflow is 105% of single-speed cooling airflow.

NOTE: Y1 is found in the outdoor unit. The furnace control CPU controls BLWM airflow by sensing only G-and-Y1 for low-cooling airflow and G-and-Y1-and-Y/Y2 for high-cooling airflow.

(2.) Terminals EAC-1 and EAC-2 are energized with 115v when the BLWM is operating on either cooling airflow.

(3.) When the thermostat is satisfied, the R to G-and-Y1 or R to G-and-Y1-and-Y/Y2 circuits open. The outdoor unit stops, and the furnace blower continues operating on the same cooling airflow for an additional 90 sec.

4. Continuous-Blower Mode

a. When the R to G circuit is closed by the thermostat, the BLWM operates at LOW, MED, or HI (50%, 65%, or 100% of single-speed cooling airflow; different than low-gas heat airflow). LOW, MED, and HI selections are described in Set-up Procedures. Terminals EAC-1 and EAC-2 are energized with 115v as long as the BLWM is operating.

b. During a call for heat, the BLWM stops during ignitor warm-up (17 sec), ignition (7 sec), and blower-on delay (45 sec), allowing the furnace heat exchangers to heat up quickly, after which the BLWM operates at the appropriate gas heating airflow.

c. The BLWM reverts to continuous-blower airflow after the heating cycle is completed. In high-stage gas heating, the furnace control CPU and ICM2+ motor control hold the BLWM at low-stage airflow for a 90-sec blower-off delay period (regardless of selected blower-off delay) before reverting to continuous-blower airflow.

d. When the thermostat calls for low-cooling, the BLWM switches to low-cool airflow or the selected continuous-blower airflow, whichever is greater. Note that a HI selection for continuous-blower airflow will provide more than normal airflow during 2-speed low-cooling. When the thermostat is satisfied, the BLWM switches to continuous-blower airflow.

e. When the thermostat calls for high cooling, the BLWM operates at high-cool airflow. When the thermostat is satisfied, the BLWM operates an additional 2 sec at high-cool airflow before reverting back to continuous-blower airflow.

f. When the R-G circuit is opened, the BLWM continues operating for an additional 90 sec, if no other function requires BLWM operation.

5. Heat Pump Mode

NOTE: A dual-fuel thermostat or accessory interface kit is required with single-speed heat pumps. See dual-fuel thermostat or interface kit Installation Instructions for single-speed heat pump thermostat and interface connections. No interface kit is needed for 2-speed heat pumps. See 2-speed heat pump Installation Instructions to determine whether a standard or dual-fuel heat pump thermostat is required and for thermostat connections.

NOTE: See TSTAT Price Page for dual-fuel thermostat ordering number.

a. Single-Speed Heat Pump Cooling

(1.) The thermostat and interface kit close the R to Y/Y2-and-G-and-O circuits to operate the furnace BLWM at cooling airflow. The Y/Y2 input to the furnace control is necessary to provide adequate cooling airflow.

(2.) Terminals EAC-1 and EAC-2 are energized with 115v when the BLWM is operating.

(3.) When the thermostat is satisfied, furnace BLWM continues operating at the cooling airflow for an additional 90 sec.

b. Two-Speed Heat Pump Cooling

(1.) The thermostat R to G-and-Y1-and-O circuits operate the furnace BLWM at low-cool airflow. The thermostat R to G-and-Y/Y2-and-Y1-and-O circuits operate the furnace BLWM at high-cool airflow (105% of single-speed cooling airflow).

NOTE: The furnace control CPU controls blower airflow by sensing G, Y1, and O for low-cool airflow and G, Y1, Y/Y2, and O for 2-speed high-cool airflow.

(2.) Terminals EAC-1 and EAC-2 are energized with 115v when the BLWM is operating at either cooling airflow.

(3.) When the thermostat is satisfied, the furnace BLWM continues operating at the same cooling airflow for an additional 90 sec.

c. Single-Speed Heat Pump Heating

(1.) The thermostat (and accessory interface kit) R to G-and-Y/Y2 circuits operate the furnace BLWM at heat pump heating airflow. Heating airflow is the same as cooling airflow for airflow selection HP-EFFY and 90% of cooling airflow for HP-CFMT selection.

(2.) Terminals EAC-1 and EAC-2 are energized with 115v when the BLWM is operating.

(3.) When the thermostat is satisfied, the furnace BLWM continues operating at the same heat pump heating airflow for an additional 90 sec.

d. Two-Speed Heat Pump Heating

(1.) The thermostat closes the R to Y1-and-G circuits for low heat and operates the furnace BLWM at heat pump low-heat airflow (may not be identical to low-cooling airflow, depending on HP selection at airflow selector). Closing the R-Y/Y2, Y1 and G circuits to the furnace provides BLWM heat pump high-heat airflow.

NOTE: The furnace control CPU controls BLWM airflow by sensing G and Y1 for heat pump low-heating airflow, and G, Y1, and Y/Y2 for heat pump high-heating airflow (105% of single-speed heating airflow).

(2.) Terminals EAC-1 and EAC-2 are energized with 115v when the BLWM is operating at either heating airflow.

(3.) When the thermostat is satisfied, the furnace BLWM continues operating at the same heating airflow for an additional 90 sec.

(4.) Opening only the R-Y/Y2 circuit switches the BLWM to heat pump low-heating airflow.

6. Defrost

a. When the furnace control R to W/W1-and-Y/Y2 circuits are closed, the furnace control CPU continues BLWM operation at the heat pump heating airflow until the end of the prepurge period, then shuts off BLWM until the end of the HSI ignitor-on period (22 sec).

b. When installed with a heat pump, the furnace control CPU automatically holds the blower-off time to 22 sec during the HSI ignitor-on period. After 17 sec of the HSI ignitor-on period, a trial-for-ignition sequence occurs as described above for gas heating. After flame is proven and without a blower-on delay, the BLWM then operates at high-gas-heat airflow during defrost. For both single-speed and 2-speed heat pumps, defrost mode is in high-gas heat only.

c. When furnace control R-W/W1 circuit is opened, the furnace control CPU begins the normal inducer post-purge period and the BLWM continues operating for the blower-off delay period. If the R-G circuit remains closed, the BLWM reverts to continuous-blower operation.

SET-UP PROCEDURES

The ICM2+ blower motor operating mode selections are made on the airflow selector control with color-coded jumper wires. The factory jumper settings have large bold circles marked around the pins. (See Fig. 16.)

NOTE: The ICM2+ furnaces are not approved for twinning.

1. Gas Heating

a. The VIOLET wire is factory connected to 1 of 4 pins: A, B, C, or D on airflow selector. The factory pin selection can be checked by noting PIN marking in the lower right-hand corner of furnace rating plate.

b. The gas heating air temperature rise is selected on airflow selector (See Fig. 15.) with RED and VIOLET jumper wires. The selections are MID, HI, and MED-HI. MID gives mid point of temperature rise range marked on rating plate. HI gives high end of temperature rise range. MID-HI gives temperature rise about halfway between MID and HI. Select the rise by moving WHITE connectors on RED and VIOLET jumper wires to desired pin positions. These settings select the rise for high and low stages. See Table 8 for air temperature rise.

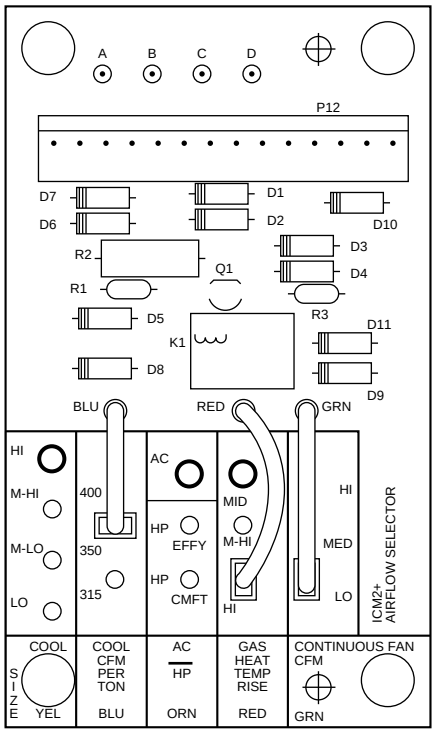

A96061

→ **Fig. 15—Airflow Selector Control**

2. Cooling and Heat Pump Heating

a. The cooling and heat pump selections can be determined from Tables 9 and 10. The selections are made by moving the WHITE connector on appropriately colored jumper wire to desired pin position.

NOTE: Power must be cycled off and then on for the cool size selection to take effect. Power need not be cycled off and on for the CFM/TON to take effect.

b. The YELLOW COOL SIZE jumper is used to select airflow to match the needed tons for the cooling or heat pump system. The BLUE CFM/TON jumper is used to select a slight adjustment to the airflow. The traditional CFM per ton is 400 for cooling and heat pump airflow. 350

→ **Table 8—Gas Heat Airflow—Nominal CFM (With Filter)**

FURNACE SIZE	GAS HEAT TEMP RISE*		GAS HEAT TEMP RISE (°F)†		GAS HEAT AIRFLOW (CFM)	
	Jumper Position		High-Stage	Low-Stage	High-Stage	Low-Stage
	Red Wire	Violet Wire				
060	HI	A	51	45	925	615
	M-HI	A	46	38	1085	730
	MID	D	40	30	1250	1135
080	HI	A	58	44	970	790
	M-HI	A	51	39	1140	925
	MID	D	45	29	1310	1395
100	HI	A	51	44	1430	1035
	M-HI	A	45	39	1685	1215
	MID	D	40	30	1935	1630
120	HI	A	69	49	1330	1240
	M-HI	A	59	43	1560	1460
	MID	D	55	40	1720	1605

*Use listed jumper position combinations only.
†Within ± 2°F

CFM per ton is the airflow used to attain the best efficiency with these units. 315 CFM per ton is the airflow used for improved dehumidification and/or with undersized ducts. Additional humidity control can be attained by using a humidistat (see Set-up Procedures section, item 4.).

c. The ORANGE jumper wire selects airflow for cooling-only (AC) or heat pump heating and cooling, and selects heat pump heating best efficiency (HP EFFY) or enhanced comfort (HP CMFT). HP EFFY provides the same heating airflow as used for cooling. HP CMFT reduces the heating airflow to 90% of the cooling airflow for a higher air temperature rise and better comfort.

3. Continuous-fan

The GREEN jumper wire selects the airflow CFM for continuous-fan. LO provides 50% of the airflow used for single-speed cooling or 2-speed cooling. MED provides 65% of cooling airflow. HI provides 100% of cooling airflow for continuous-fan operation.

NOTE: If HI is selected with a 2-speed cooling or heat pump system, the airflow will remain at 100% of high-cooling/heating when the system is in low-cooling and heat pump low-heating mode. Continuous-fan selection has no effect on gas-heating airflow.

4. As an alternative to selecting 315 CFM per ton for cooling airflow, an active dehumidification mode can be invoked by connecting a humidistat in series with the GREEN wire marked DEHUM connected to the 1/4 quick-connect terminal at G on the furnace control. The humidistat contacts should open on a rise in humidity. When the humidistat contacts open, the airflow will be reduced to 80% of the selected airflow, except that this airflow will not be reduced to less than 280 CFM per ton.

NOTE: When a humidistat is calling for reduced airflow and the thermostat is satisfied, the blower will not operate on the continuous-fan LOW setting to prevent re-evaporation of condensate at the evaporator coil. When continuous-fan MED or HI setting is selected, normal airflow will be reduced to 80%.

START-UP PROCEDURES

1. Component test—The furnace features a component test system to help diagnose a system problem in the case of a component failure. To initiate the component test procedure, ensure that there are no thermostat inputs to the control and all time delays have expired. Short the TWIN/TEST terminal to ground or COM 24V for 1 to 4 sec. (See Fig. 13.)

NOTE: The component test feature will not operate if the control is receiving any thermostat signals or until all time delays have expired. The ICM2+ blower motor speed ramp-up will slightly delay blower response times.

The component test sequence is as follows:

a. The furnace control checks itself, operates the inducer motor on low speed for 7 sec and on high speed for 7 sec, then stops.

b. The hot surface ignitor is energized for 15 sec, then de-energized.

c. The blower motor operates at continuous-fan airflow for 7 sec.

d. The blower motor operates at high-gas heat airflow for 7 sec. The gas valve and humidifier terminal HUM are not energized for safety reasons.

e. The blower motor operates at single-speed cooling/heat pump heating airflow (or 2-speed heat pump high-heat/high-cooling) for 7 sec, then stops.

NOTE: The EAC terminals are energized when the blower is operating.

2. After all connections have been made, purge gas lines and check for leaks.

⚠ WARNING

Never purge a gas line into a combustion chamber. Never use matches, candles, flame, or other sources of ignition for the purpose of checking leakage. Use a soap-and-water solution to check for leakage. A failure to follow this warning can cause a fire, explosion, personal injury, or death.

3. To operate furnace, follow procedures on operating instructions label attached to furnace.

4. With furnace operating, set thermostat below room temperature and observe that furnace goes off. Set thermostat above room temperature and observe that furnace restarts.

ADJUSTMENTS

1. Set gas input rate.

→ Table 9—Air Conditioning and Heat Pump Cooling/Efficiency Heating Airflow Nominal CFM (With Filter)

AC/HP JUMPER POSITION:	AC	AIR CONDITIONING, COOLING AIRFLOW
	HP—EFFY	HEAT PUMP—EFFICIENCY, COOLING AND HEATING AIRFLOW
	HP—CFMT	HEAT PUMP—COMFORT, COOLING AIRFLOW

Furnace Size	Airflow Selection		Single-Speed CFM			Two-Speed (High/Low) CFM					
	Cool Size Jumper Position	Tons	Cool CFM Per Ton Jumper Position			Cool CFM Per Ton Jumper Position					
						400		350		315	
			400	350	315	High	Low	High	Low	High	Low
060	LO	1-1/2	600	530	500*	630	500*	550	500*	500*	500*
	M-LO	2	800	700	630	865	510	735	500*	660	500*
	M-HI	2-1/2	1000	880	790	1060	650	920	570	825	510
	HI	3	1200	1050	945	1260	780	1100	680	990	585
080	LO	2-1/2	1000	875	790	1050	660	920	595	830	545
	M-LO	3	1215	1050	945	1260	790	1100	700	990	625
	M-HI	3-1/2	1400	1225	1100	1470	910	1280	805	1155	715
	HI	4	1600	1400	1350	1635	1040	1470	915	1325	820
100	LO	3	1195	1045	950	1260	780	1090	775	990	700*
	M-LO	3-1/2	1400	1225	1090	1470	910	1285	830	1155	715
	M-HI	4	1600	1400	1260	1680	1040	1465	915	1325	820
	HI	5	2000	1750	1575	1085	1300	1840	1150	1655	1025
120	LO	3	1160	1050	955	1195	865	1085	785	985	785
	M-LO	3-1/2	1400	1220	1090	1420	970	1265	875	1150	845
	M-HI	4	1600	1395	1250	1650	1070	1465	975	1315	930
	HI	5	2000	1750	1565	2110	1300	1865	1140	1640	1080

* Minimum airflow is set for use with electronic air cleaner: 060—500 CFM, 080—500 CFM, 100—700 CFM, 120—700 CFM

NOTES:
1. A humidistat can be added to reduce airflow for better dehumidification when needed. This feature reduces the selected cooling airflow by 20% (280 CFM per ton limit).
2. Continuous-fan settings are 50%, 65%, or 100% of selected cooling airflow.

→ Table 10—Heat Pump Comfort Heating Nominal CFM (With Filter)

AC/HP JUMPER POSITION: HP—CMFT HEAT PUMP—COMFORT, HEATING AIRFLOW

Furnace Size	Airflow Selection		Single-Speed CFM			Two-Speed (High/Low) CFM					
	Cool Size Jumper Position	Tons	Cool CFM Per Ton Jumper Position			Cool CFM Per Ton Jumper Position					
						400		350		315	
			400	350	315	HIGH	LOW	HIGH	LOW	HIGH	LOW
060	LO	1-1/2	540	500*	500*	565	500*	500*	500*	500*	500*
	M-LO	2	720	630	570	780	500*	660	500*	595	500*
	M-HI	2-1/2	900	790	710	945	585	830	515	740	500*
	HI	3	1080	945	855	1135	700	990	610	895	555
080	LO	2-1/2	900	785	710	945	605	825	535	755	500*
	M-LO	3	1080	945	850	1135	715	990	630	895	560
	M-HI	3-1/2	1260	1100	990	1325	830	1150	725	1040	655
	HI	4	1440	1260	1135	1510	940	1325	825	1190	740
100	LO	3	1075	940	855	1130	700	980	700	890	700*
	M-LO	3-1/2	1260	1100	990	1325	820	1155	750	1040	700*
	M-HI	4	1440	1260	1130	1510	935	1320	825	1190	740
	HI	5	1800	1575	1420	1890	1170	1655	1035	1490	920
120	LO	3	1045	945	860	1075	780	975	750	885	750
	M-LO	3-1/2	1260	1100	980	1280	875	1140	790	1035	760
	M-HI	4	1440	1255	1125	1485	965	1320	880	1185	835
	HI	5	1800	1575	1410	1900	1170	1650	1025	1475	970

* Minimum airflow is set for electronic air cleaner: 060—500 CFM, 080—500 CFM, 100—700 CFM, 120—700 CFM

NOTES:
1. A humidistat can be added to reduce airflow for better dehumidification when needed. This feature reduces the selected cooling airflow by 20% (280 CFM per ton limit).
2. Continuous-fan settings are 50%, 65%, or 100% of selected cooling airflow.

The gas input rate must be set for both high- and low-stage heat. Each adjustment is made independently at the gas control regulators.

There are 2 methods of adjusting the gas input rate. The preferred method is by using Table 11 and following instructions in item a. The second method is by clocking the gas meter and following instructions in item b.

The procedure in item b. MUST be used for altitudes above 2000 ft.

The gas valve regulator has been nominally set at 1.5-in. wc for low-stage and 3.5-in. wc for high-stage for natural gas.

a. Check gas input rate using Table 11.

(1.) Obtain average yearly gas heat value for local gas supply.

(2.) Obtain average yearly specific gravity for local gas supply.

(3.) Verify furnace model. Table 11 can only be used for models 58UHV and 58UXV Furnaces.

(4.) Check and verify orifice size in furnace. NEVER ASSUME THE ORIFICE SIZE. ALWAYS CHECK AND VERIFY.

(5.) Find natural gas heat value and specific gravity in Table 11.

(6.) Follow heat value and specific gravity lines to point of intersection. Find orifice size and manifold pressure settings for proper operation at given natural gas conditions on low and high stages.

EXAMPLE:
Heat value = 980 Btu/cu ft
Specific gravity = 0.62
Therefore: Orifice No. 44*
Manifold pressure 3.5-in. wc on high stage and 1.5-in. wc on low stage.
* The furnace is shipped with No. 45 orifices. Therefore, in this example all main burner orifices must be changed and manifold pressure must be adjusted.

(7.) Proceed to item c. to adjust manifold pressure.

b. Check gas input rate by clocking gas meter for low and high stage.

(1.) Obtain average yearly heat value for local gas supply.

NOTE: Be sure heating value used for calculations is correct for your altitude. Consult local gas utility for altitude adjustments (if any) of gas heating value.

(2.) Check and verify orifice size in furnace. NEVER ASSUME THE ORIFICE SIZE. ALWAYS CHECK AND VERIFY.

(3.) Turn off all other gas appliances and pilots.

(4.) Turn SW-2 to ON. Close R-W/W1 and jumper R to W2 to start furnace in high stage and let run for 3 minutes.

(5.) Measure time (in sec) for gas meter to complete 1 revolution.

(6.) Refer to Table 12 for gas rate (cubic ft of gas per hr).

(7.) Multiply gas rate (cubic ft/hr) by heating value (Btu/cubic ft).

EXAMPLE:
Btu/hr heating input = Btu/cu ft X cu ft/hr
Heating value of gas = 1070 Btu/cu ft
Time for 1 revolution of 2-cu ft dial = 72 sec
Gas rate = 100 cu ft/hr (from Table 12)
Btu/hr heating input = 100 X 1070 = 107,000 Btuh

(8.) Remove jumper R to W2 and repeat items (5.) through (7.) for low stage.

NOTE: High altitude—In the United States, gas input on rating plate is for altitudes up to 2000 ft. for natural and propane gases. Ratings for altitudes over 2000 ft MUST be reduced 4 percent for each 1000 ft above sea level. To obtain the adjusted altitude rating, adjust the manifold pressure (see item c.) and replace the main burner orifices as needed. Refer to NFGC Appendix F, Table F-4 for proper orifice sizing at high altitudes. Installations at altitudes 5500 feet or higher above sea level shall use a factory-supplied high-altitude conversion kit. In Canada, gas input on rating plate is for altitudes up to 2000 ft for natural and propane gases. High-altitude ratings are from 2000 ft to 4500 ft above sea level. High-altitude rating includes a 10 percent derate as required by Canadian standards.

(9.) Measured gas inputs should equal low- and high-stage gas inputs on unit rating plate ± 2 percent.

(10.) Proceed to item c. to adjust manifold pressure.

⚠ CAUTION

DO NOT redrill burner orifices. Improper drilling (burrs, out-of-round, etc.) can cause excessive burner operating noise and misdirection of burner flames. This could result in flame impingement on burners and heat exchanger surfaces, leading to potential failures.

c. Adjust gas manifold pressure

(1.) Move SW-2 to the ON position to lock out the adaptive algorithm. (See Fig. 13 and 14.) Jumper R to W/W1 and W2 to call for high stage.

(2.) Remove gas control regulator adjustment seal caps. (See Fig. 17.)

(3.) Turn high-fire adjusting screw (5/64-in. hex allen wrench) counterclockwise (out) to decrease input rate or clockwise (in) to increase rate. When adjusting input rate, DO NOT set manifold pressure less than 3.2-in. wc or more than 3.8-in. wc for natural gas. If manifold pressure is outside this range, change main burner orifices.

(4.) Remove R-to-W2 jumper to place furnace in low-stage operation for low-stage adjustment.

(5.) Turn low-stage adjusting screw (5/64-in. hex allen wrench) counterclockwise (out) to decrease input rate or clockwise (in) to increase rate. When adjusting input rate, DO NOT set manifold pressure less than 1.3-in wc or more than 1.7-in. wc for natural gas. If manifold pressure is outside this range, change main burner orifices.

NOTE: If orifices are changed, both high- and low-stage input rates must be readjusted, with manifold pressures within ranges specified in items (3.) and (5.).

NOTE: If orifice appears damaged or it is suspected to have been redrilled, check the orifice size with a numbered drill bit of the correct size. Never use a redrilled orifice. A burr-free and squarely aligned orifice is essential for proper flame characteristics.

(6.) Remove jumper on R-W/W1 after low-stage adjustments.

(7.) When correct input is obtained, replace regulator seal caps. Main burner flame should be clear blue, almost transparent. (See Fig. 18.)

2. Set air temperature rises.

Place SW-2 in ON position. Jumper R to W/W1 and W2 to check high-stage temperature rise. To check low-stage temperature rise, remove jumper to W2. Determine air temperature rises for both high and low stages. Do not exceed temperature rise ranges specified on unit rating plate for high and low stages.

a. Place duct thermometers in return and supply ducts as near furnace as possible. Be sure thermometers do not see heat exchangers so that radiant heat will not affect thermometer readings. This is particularly important with straight run ducts.

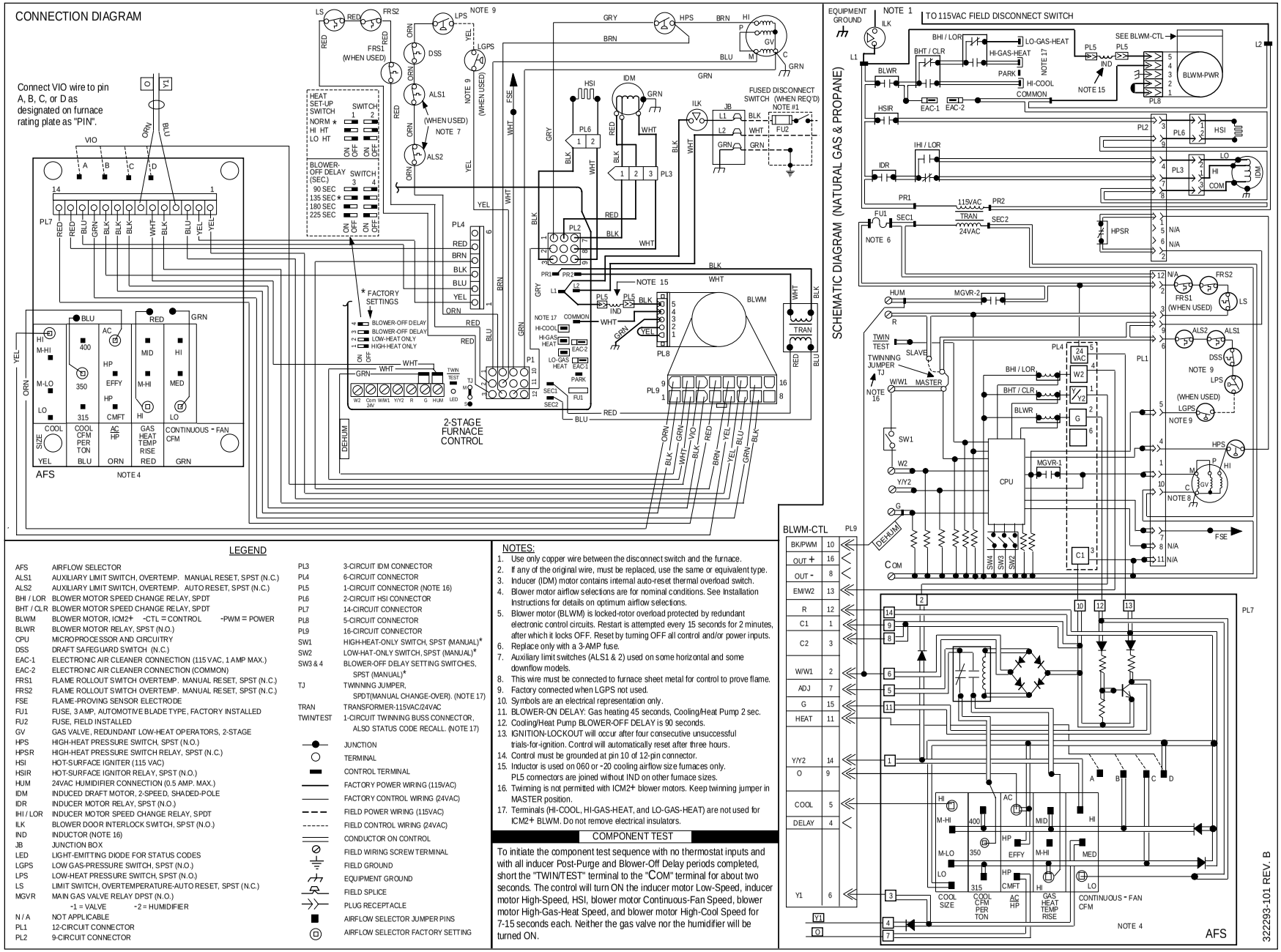

A96107

→ **Fig. 16—Wiring Diagram**

LEGEND

AFS	AIRFLOW SELECTOR
ALS1	AUXILIARY LIMIT SWITCH, OVERTEMP. MANUAL RESET, SPST (N.C.)
ALS2	AUXILIARY LIMIT SWITCH, OVERTEMP. AUTO RESET, SPST (N.C.)
BHI / LOR	BLOWER MOTOR SPEED CHANGE RELAY, SPDT
BHT / CLR	BLOWER MOTOR SPEED CHANGE RELAY, SPDT
BLWM	BLOWER MOTOR, ICM2+ -CTL = CONTROL -PWM = POWER
BLWR	BLOWER MOTOR RELAY, SPST (N.O.)
CPU	MICROPROCESSOR AND CIRCUITRY
DSS	DRAFT SAFEGUARD SWITCH (N.C.)
EAC-1	ELECTRONIC AIR CLEANER CONNECTION (115 VAC, 1 AMP MAX.)
EAC-2	ELECTRONIC AIR CLEANER CONNECTION (COMMON)
FRS1	FLAME ROLLOUT SWITCH OVERTEMP. MANUAL RESET, SPST (N.C.)
FRS2	FLAME ROLLOUT SWITCH OVERTEMP. MANUAL RESET, SPST (N.C.)
FSE	FLAME-PROVING SENSOR ELECTRODE
FU1	FUSE, 3 AMP, AUTOMOTIVE BLADE TYPE, FACTORY INSTALLED
FU2	FUSE, FIELD INSTALLED
GV	GAS VALVE, REDUNDANT LOW-HEAT OPERATORS, 2-STAGE
HPS	HIGH-HEAT PRESSURE SWITCH, SPST (N.O.)
HPSR	HIGH-HEAT PRESSURE SWITCH RELAY, SPST (N.C.)
HSI	HOT-SURFACE IGNITER (115 VAC)
HSIR	HOT-SURFACE IGNITOR RELAY, SPST (N.O.)
HUM	24VAC HUMIDIFIER CONNECTION (0.5 AMP. MAX.)
IDM	INDUCED DRAFT MOTOR, 2-SPEED, SHADED-POLE
IDR	INDUCER MOTOR RELAY, SPST (N.O.)
IHI / LOR	INDUCER MOTOR SPEED CHANGE RELAY, SPDT
ILK	BLOWER DOOR INTERLOCK SWITCH, SPST (N.O.)
IND	INDUCTOR (NOTE 16)
JB	JUNCTION BOX
LED	LIGHT-EMITTING DIODE FOR STATUS CODES
LGPS	LOW GAS-PRESSURE SWITCH, SPST (N.O.)
LPS	LOW-HEAT PRESSURE SWITCH, SPST (N.O.)
LS	LIMIT SWITCH, OVERTEMPERATURE-AUTO RESET, SPST (N.C.)
MGVR	MAIN GAS VALVE RELAY DPST (N.O.) -1 = VALVE -2 = HUMIDIFIER
N / A	NOT APPLICABLE
PL1	12-CIRCUIT CONNECTOR
PL2	9-CIRCUIT CONNECTOR
PL3	3-CIRCUIT IDM CONNECTOR
PL4	6-CIRCUIT CONNECTOR
PL5	1-CIRCUIT CONNECTOR (NOTE 16)
PL6	2-CIRCUIT HSI CONNECTOR
PL7	14-CIRCUIT CONNECTOR
PL8	5-CIRCUIT CONNECTOR
PL9	16-CIRCUIT CONNECTOR
SW1	HIGH-HEAT-ONLY SWITCH, SPST (MANUAL)*
SW2	LOW-HAT-ONLY SWITCH, SPST (MANUAL)*
SW3 & 4	BLOWER-OFF DELAY SETTING SWITCHES, SPST (MANUAL)*
TJ	TWINNING JUMPER, SPDT(MANUAL CHANGE-OVER). (NOTE 17)
TRAN	TRANSFORMER-115VAC/24VAC
TWIN/TEST	1-CIRCUIT TWINNING BUSS CONNECTOR, ALSO STATUS CODE RECALL. (NOTE 17)
●	JUNCTION
○	TERMINAL
▬	CONTROL TERMINAL
———	FACTORY POWER WIRING (115VAC)
———	FACTORY CONTROL WIRING (24VAC)
- - -	FIELD POWER WIRING (115VAC)
- - -	FIELD CONTROL WIRING (24VAC)
═══	CONDUCTOR ON CONTROL
⊘	FIELD WIRING SCREW TERMINAL
⏚	FIELD GROUND
⏚	EQUIPMENT GROUND
	FIELD SPLICE
	PLUG RECEPTACLE
■	AIRFLOW SELECTOR JUMPER PINS
◎	AIRFLOW SELECTOR FACTORY SETTING

NOTES:

1. Use only copper wire between the disconnect switch and the furnace.
2. If any of the original wire, must be replaced, use the same or equivalent type.
3. Inducer (IDM) motor contains internal auto-reset thermal overload switch.
4. Blower motor airflow selections are for nominal conditions. See Installation Instructions for details on optimum airflow selections.
5. Blower motor (BLWM) is locked-rotor overload protected by redundant electronic control circuits. Restart is attempted every 15 seconds for 2 minutes, after which it locks OFF. Reset by turning OFF all control and/or power inputs.
6. Replace only with a 3-AMP fuse.
7. Auxiliary limit switches (ALS1 & 2) used on some horizontal and some downflow models.
8. This wire must be connected to furnace sheet metal for control to prove flame.
9. Factory connected when LGPS not used.
10. Symbols are an electrical representation only.
11. BLOWER-ON DELAY: Gas heating 45 seconds, Cooling/Heat Pump 2 sec.
12. Cooling/Heat Pump BLOWER-OFF DELAY is 90 seconds.
13. IGNITION-LOCKOUT will occur after four consecutive unsuccessful trials-for-ignition. Control will automatically reset after three hours.
14. Control must be grounded at pin 10 of 12-pin connector.
15. Inductor is used on 060 or -20 cooling airflow size furnaces only. PL5 connectors are joined without IND on other furnace sizes.
16. Twinning is not permitted with ICM2+ blower motors. Keep twinning jumper in MASTER position.
17. Terminals (HI-COOL, HI-GAS-HEAT, and LO-GAS-HEAT) are not used for ICM2+ BLWM. Do not remove electrical insulators.

COMPONENT TEST

To initiate the component test sequence with no thermostat inputs and with all inducer Post-Purge and Blower-Off Delay periods completed, short the "TWIN/TEST" terminal to the "COM" terminal for about two seconds. The control will turn ON the inducer motor Low-Speed, inducer motor High-Speed, HSI, blower motor Continuous-Fan Speed, blower motor High-Gas-Heat Speed, and blower motor High-Cool Speed for 7-15 seconds each. Neither the gas valve nor the humidifier will be turned ON.

Table 11—Models 58UHV and 58UXV Orifice Size and Manifold Pressure for Correct Input Rate (Tabulated Data Based on Altitude Up to 2000 ft and 20,000 Btuh High Heat/13,000 Btuh Low Heat Per Burner)

GAS HEAT VALUE (BTU/CU FT)	SPECIFIC GRAVITY OF NATURAL GAS															
	0.58		0.60		0.62		0.64		0.66		0.68		0.70		0.72	
	Orf No.	Heat High/Low	Orf No.	Heat High/Low	Orf No.	Heat High/Low	Orf No.	Heat High/Low	Orf No.	Heat High/Low	Orf No.	Heat High/Low	Orf No.	Heat High/Low	Orf No.	Heat High/Low
860	43	3.7/1.6	43	3.8/1.6	42	3.2/1.4	42	3.3/1.4	42	3.4/1.5	41 42	3.2/1.4 3.6/1.5	41 42	3.3/1.4 3.7/1.5	41 42	3.4/1.4 3.8/1.6
875	43	3.6/1.5	43	3.7/1.6	43	3.8/1.6	42	3.2/1.4	42	3.3/1.4	42	3.4/1.4	41 42	3.2/1.3 3.5/1.5	41 42	3.3/1.4 3.6/1.5
890	43	3.5/1.5	43	3.6/1.5	43	3.7/1.6	43	3.8/1.6	42	3.2/1.4	42	3.3/1.4	42	3.4/1.4	41 42	3.2/1.3 3.5/1.5
905	43 44	3.3/1.3 3.7/1.5	43	3.5/1.4	43	3.6/1.5	43	3.7/1.5	43	3.8/1.6	42	3.2/1.4	42	3.3/1.4	42	3.4/1.4
920	43 44	3.2/1.3 3.7/1.5	43 44	3.3/1.4 3.8/1.6	43	3.5/1.4	43	3.6/1.5	43	3.7/1.5	43	3.8/1.5	42	3.2/1.3	42	3.3/1.3
935	44	3.6/1.5	43 44	3.2/1.4 3.7/1.6	43 44	3.3/1.4 3.8/1.6	43	3.5/1.5	43	3.6/1.5	43	3.7/1.5	43	3.8/1.6	42	3.2/1.3
950	44	3.5/1.5	44	3.6/1.5	43 44	3.2/1.4 3.7/1.6	43 44	3.3/1.4 3.8/1.6	43	3.4/1.5	43	3.6/1.5	43	3.7/1.5	43	3.8/1.6
965	44	3.4/1.4	44	3.5/1.5	44	3.6/1.5	43 44	3.2/1.4 3.7/1.6	43 44	3.3/1.4 3.8/1.6	43	3.4/1.5	43	3.5/1.5	43	3.6/1.5
980	44	3.3/1.4	44	3.4/1.4	44	3.5/1.5	44	3.6/1.5	43 44	3.2/1.4 3.7/1.6	43 44	3.3/1.4 3.8/1.6	43	3.4/1.5	43	3.5/1.5
995	44 45	3.2/1.3 3.8/1.6	44	3.3/1.4	44	3.4/1.4	44	3.5/1.5	44	3.6/1.5	43 44	3.2/1.4 3.7/1.6	43 44	3.3/1.4 3.8/1.6	43	3.4/1.4
1010	45	3.7/1.6	44 45	3.2/1.3 3.8/1.6	44	3.3/1.4	44	3.4/1.4	44	3.5/1.5	44	3.6/1.5	43 44	3.2/1.4 3.7/1.6	43 44	3.3/1.4 3.8/1.6
1025	45 46	3.6/1.5 3.8/1.6	45	3.7/1.6	44	3.2/1.3	44	3.3/1.4	44	3.4/1.4	44	3.5/1.5	44	3.6/1.5	43 44	3.2/1.4 3.7/1.6
1040	45 46	3.5/1.5 3.7/1.6	45 46	3.6/1.5 3.8/1.6	45	3.7/1.6	44	3.2/1.3	44	3.3/1.4	44	3.4/1.4	44	3.5/1.5	44	3.6/1.5
1055	45 46	3.4/1.4 3.6/1.5	45 46	3.5/1.5 3.7/1.6	45 46	3.6/1.5 3.8/1.6	45	3.8/1.6	44	3.2/1.3	44	3.3/1.4	44	3.4/1.4	44	3.5/1.5
1070	45 46	3.3/1.4 3.5/1.5	45 46	3.4/1.4 3.6/1.5	45 46	3.5/1.5 3.7/1.6	45 46	3.7/1.5 3.8/1.6	45	3.8/1.6	44	3.2/1.4	44	3.3/1.4	44	3.4/1.4
1085	45 46 47	3.2/1.4 3.4/1.4 3.8/1.6	45 46	3.3/1.4 3.5/1.5	45 46	3.4/1.5 3.6/1.5	45 46	3.6/1.5 3.7/1.6	45	3.7/1.5	45	3.8/1.6	44	3.2/1.4	44	3.3/1.4
1100	46 47	3.3/1.4 3.7/1.6	45 46	3.2/1.4 3.4/1.4	45 46	3.4/1.4 3.5/1.5	45 46	3.5/1.5 3.6/1.5	45 46	3.6/1.5 3.8/1.6	45	3.7/1.6	45	3.8/1.6	44	3.2/1.4

b. When thermometer readings stabilize, subtract return-air temperature from supply-air temperature to determine temperature rise.

NOTE: If the temperature rise is outside this range, first check:

(1.) Gas input for low- and high-stage operation.

(2.) Derate for altitude if applicable.

(3.) Return and supply ducts for excessive restrictions causing static pressures greater than 0.70-in. wc.

c. Adjust air temperature rise by adjusting airflow. Move the RED jumper wire on the airflow selector control to MID, HI, or M-HI for mid-point of the air temperature rise range, high end of the rise range, or in-between, respectively. The single RED jumper selection is used for both high- and low-stage rises. Power need not be reset after making this selection.

⚠ CAUTION

Recheck the temperature rise. It must be within the limits specified on the unit rating plate. Recommended operation is at midpoint of rise range or above.

3. Set thermostat heat anticipator.

a. When using a non-electronic thermostat, the thermostat heat anticipation must be set to match the amp draw of the electrical components in the R-W/W1 circuit. Accurate amp draw readings can be obtained at the wires normally connected to thermostat subbase terminals R and W/W1. Fig. 19 illustrates an easy method of obtaining the actual amp draw. The amp reading should be taken after the blower motor has started and the furnace is operating in low stage. To operate the furnace in low stage, first move SW-2 to ON position, THEN connect the ammeter wires as shown in Fig. 19. The thermostat anticipator should NOT be in this circuit while measuring the current. If the thermostat has no subbase, the thermostat MUST be disconnected from the R and W/W1 wires during the current measurement. Return SW-2 to final desired location after completing the reading. See the thermostat manufacturer's instructions for adjusting the heat anticipator and for varying the heating cycle length.

b. When using an electronic thermostat, set the cycle rate for 3 cycles per hr, if possible.

CHECK SAFETY CONTROLS

The flame sensor, gas valve, and pressure switches were all checked in the Start-up section as part of normal operation.

1. Check primary limit control.

This control shuts off the combustion control system and energizes the circulating-air blower motor if the furnace overheats.

Table 12—Gas Rate (Cu Ft/Hr)

SECONDS FOR 1 REVOLUTION	SIZE OF TEST DIAL 1 cu ft	2 cu ft	5 cu ft	SECONDS FOR 1 REVOLUTION	SIZE OF TEST DIAL 1 cu ft	2 cu ft	5 cu ft
10	360	720	1800	**50**	72	144	360
11	327	655	1636	**51**	71	141	355
12	300	600	1500	**52**	69	138	346
13	277	555	1385	**53**	68	136	340
14	257	514	1286	**54**	67	133	333
15	240	480	1200	**55**	65	131	327
16	225	450	1125	**56**	64	129	321
17	212	424	1059	**57**	63	126	316
18	200	400	100	**58**	62	124	310
19	189	379	947	**59**	61	122	305
20	180	360	900	**60**	60	120	300
21	171	343	857	**62**	58	116	290
22	164	327	818	**64**	56	112	281
23	157	313	783	**66**	54	109	273
24	150	300	750	**68**	53	106	265
25	144	288	720	**70**	51	103	257
26	138	277	692	**72**	50	100	250
27	133	267	667	**74**	48	97	243
28	129	257	643	**76**	47	95	237
29	124	248	621	**78**	46	92	231
30	120	240	600	**80**	45	90	225
31	116	232	581	**82**	44	88	220
32	113	225	563	**84**	43	86	214
33	109	218	545	**86**	42	84	209
34	106	212	529	**88**	41	82	205
35	103	206	514	**90**	40	80	200
36	100	200	500	**92**	39	78	196
37	97	195	486	**94**	38	76	192
38	95	189	474	**96**	38	75	188
39	92	185	462	**98**	37	74	184
40	90	180	450	**100**	36	72	180
41	88	176	439	**102**	35	71	178
42	86	172	429	**104**	35	69	173
43	84	167	419	**106**	34	68	170
44	82	164	409	**108**	33	67	167
45	80	160	400	**110**	33	65	164
46	78	157	391	**112**	32	64	161
47	76	153	383	**116**	31	62	155
48	75	150	375	**120**	30	60	150
49	73	147	367				

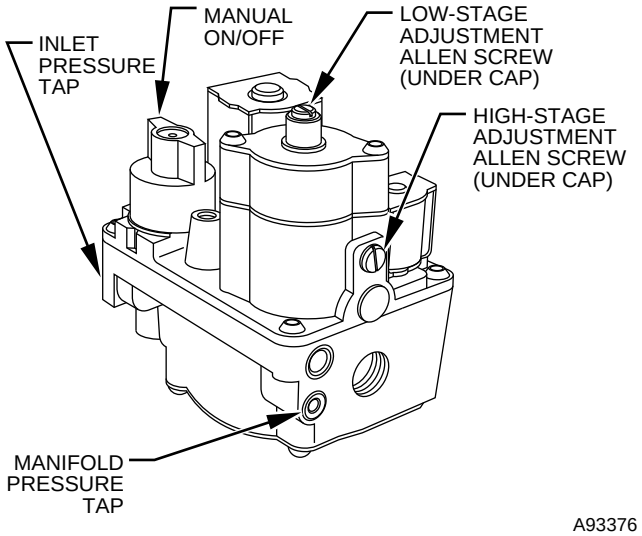

Fig. 17—Redundant Automatic Gas Control Valve

The preferred method of checking the limit control is to gradually block off the return air after the furnace has been operating for a period of at least 5 minutes. As soon as the limit has shut off the burners, the return-air opening should be unblocked. By using this method to check the limit control, it can be established that the limit is functioning properly and will operate, if there is a motor failure.

2. Check draft safeguard switch.

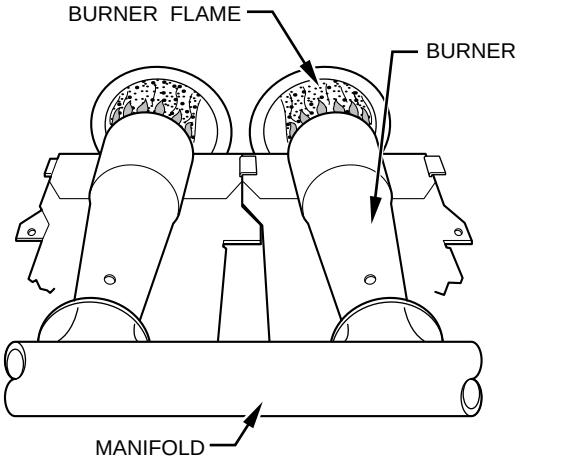

Fig. 18—Burner Flame

The purpose of this control is to cause safe shutdown of the furnace during certain blocked vent conditions.

a. Disconnect power to furnace and remove vent connector from furnace flue collar. Be sure to allow time for vent connector pipe to cool down before removing.

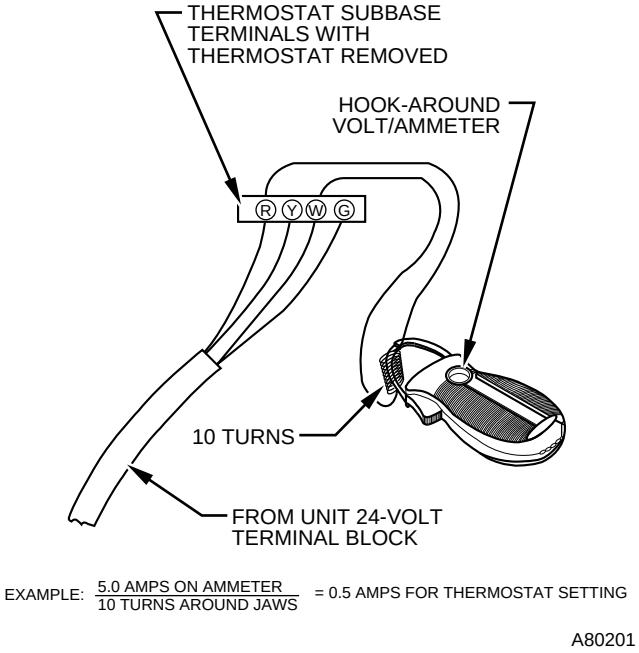

Fig. 19—Amp Draw Check With Ammeter

b. Restore power to furnace and set room thermostat above room temperature.

c. After normal start-up, allow furnace to operate for 2 minutes, then block flue outlet 100 percent. Furnace should cycle off within 2 minutes.

d. Remove blockage and reconnect vent connector to furnace flue collar.

e. Wait 5 minutes and then reset draft safeguard switch.

3. Check flow-sensing pressure switches.

This control proves operation of draft-inducer blower.

a. Turn off 115-v power to furnace.

b. Remove gas control door and disconnect inducer motor leads from wire harness.

c. Turn on 115-v power to furnace.

d. Close thermostat switch as if making normal furnace start. If the hot surface ignitor does not glow within several minutes and control flashes code 32, then the flow-sensing switches are functioning properly.

e. Turn off 115-v power to furnace.

f. Reconnect inducer motor wires, replace gas control door, and turn on 115-v power.

CHECKLIST

1. Put away tools and instruments, and clean up debris.
2. Check SW-1 through SW-4 after completing installation to ensure desired settings for thermostat type (SW-1 and SW-2) and blower-off delay (SW-3 and SW-4). Refer to Tables 6 and 7.
3. Verify manual reset switches have continuity.
4. Ensure blower and gas control access doors are properly installed.
5. Cycle-test furnace with room thermostat.
6. Check operation of accessories per manufacturer's instructions.
7. Review User's Manual with owner.
8. Leave literature packet near furnace.

SERVICE TRAINING

Packaged Service Training programs are an excellent way to increase your knowledge of the equipment discussed in this manual, including:

- Unit Familiarization
- Maintenance
- Installation Overview
- Operating Sequence

A large selection of product, theory, and skills programs is available, using popular video-based formats and materials. All include video and/or slides, plus companion book.

Classroom Service Training plus "hands-on" the products in our labs can mean increased confidence that really pays dividends in faster troubleshooting, fewer callbacks. Course descriptions and schedules are in our catalog.

CALL FOR FREE CATALOG 1-800-962-9212

[ ] Packaged Service Training [ ] Classroom Service Training

Copyright 1996 CARRIER Corp. • 7310 W. Morris St. • Indianapolis, IN 46231

Manufacturer reserves the right to discontinue, or change at any time, specifications or designs without notice and without incurring obligations.