311AAV/JAV
Deluxe Induced-Combustion
4-Way Multipoise Furnace

Installation, Start-up, Operating, and Service and Maintenance Instructions -Series A

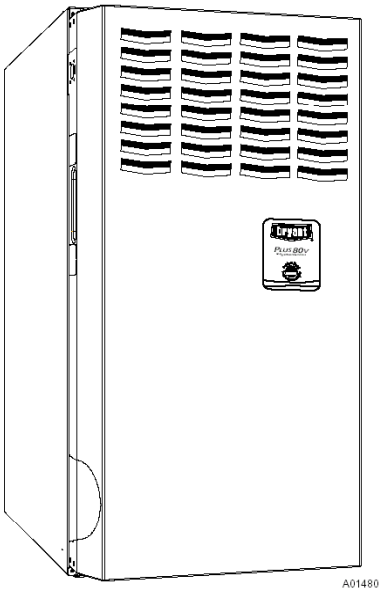

The Plus 80™ Gas Furnace

The 311AAV/JAV Deluxe 4-Way Multipoise Gas Furnace offers outstanding features in an 80% AFUE furnace. Deluxe features include: third fan relay for discrete continuous fan speed, the ability to change continuous fan speeds from the thermostat, dehumidify mode, standard Media Filter Cabinet, fault code storage, and more. The Plus 80 is very quiet thanks to a new combustion design that eliminates noise, not just muffle or box it in. Applications are easy with 4-way multipoise design, through-the-furnace downflow venting, 13 different venting options, and a door designed for easy service access. An inner blower door is provided for tighter sealing in sensitive applications. The 311AAV/JAV furnace is approved for use with natural or propane gas, and the 311JAV is also approved for use in Low NOx Air Quality Management Districts.

STANDARD FEATURES

- **Noise elimination combustion system**
- **Media Filter Cabinet included**
- **Microprocessor based "smart" control center**
  - **Fan On Plus™ -**Continuous Fan speed adjustable from thermostat
  - Dehumidify mode
  - Adjustable heating air temperature rise
  - LED diagnostics and self test feature
  - Non-volatile fault code storage
- **Patented blocked vent safeguard to ensure proper furnace venting**
- **All models are Chimney Friendly when used with accessory vent kit**
- **Insulated blower compartment**
- **Four-position furnace: upflow, horizontal right, horizontal left, downflow**
  Thirteen different vent options
- **Heat pump compatible**
- **Hot surface ignition (HSI)**
- **Residential installations eligible for consumer financing through the Comfort Credit Program**
- **Twinning in Upflow, Downflow and Horizontal**

LIMITED WARRANTY

- 20-year warranty on "Super S™" heat exchanger
- 3-year parts warranty on microprocessor and hot surface ignition
- 5-year parts warranty on all other components

Single-Stage Deluxe Induced-Combustion 4-Way Multipoise Furnace

Cancels: II 311A-45-2 II 311A-45-3

Installation, Start-up, Operating, and Service and Maintenance Instructions Series 100/A

NOTE: Read the entire instruction manual before starting the installation.

This symbol → indicates a change since the last issue.

REGISTERED QUALITY SYSTEM

TABLE OF CONTENTS

SAFETY CONSIDERATIONS 2
INTRODUCTION 3
CODES AND STANDARDS 3
- Safety 3
- General Installation 3
- Combustion and Ventilation Air 4
- Duct Systems 4
- Acoustical Lining and Fibrous Glass Duct 4
- Gas Piping and Gas Pipe Pressure Testing 5
- Electrical Connections 5

ELECTROSTATIC DISCHARGE (ESD) PRECAUTIONS PROCEDURE 5
LOCATION 5
- General 5
- Location Relative to Cooling Equipment 6

AIR FOR COMBUSTION AND VENTILATION 6
- Unconfined Space 7
- Confined Space 7

INSTALLATION 8
- Upflow Installation 8
  - Bottom Return Air Inlet 11
  - Side Return Air Inlet 8
  - Leveling Legs (If Desired) 8
- Downflow Installation 9
  - Bottom Return Air Inlet 11
- Horizontal Installation 11
  - Suspended Unit Support 11
  - Platform Unit Support 11
  - Roll-Out Protection 11
  - Bottom Return Air Inlet 11
  - Side Return Air Inlet 11
- Filter Arrangement 12
- Air Ducts 12
  - General Requirements 12
  - Ductwork Acoustical Treatment 12
  - Supply Air Connections 12
  - Return Air Connections 13
- Gas Piping 13
- Electrical Connections 15
  - 115-V Wiring 15
  - J-Box Relocation 16
  - Electrical Connection to J-Box 16
  - For Power Cord Installation 16
  - For BX Cable Installation 16
  - J-Box Cover Installation 16
  - 24-V Wiring 16
  - Accessories 16
- Venting 18
  - General Venting Requirements 18
  - Masonry Chimney Requirements 21
  - Appliance Application Requirements 22
  - Additional Venting Requirements 25
  - Sidewall Venting 26

START-UP, ADJUSTMENT, AND SAFETY CHECK 26
- General 26
- Start-Up Procedures 26
- Adjustments 27
- Check Safety Controls 30
- Checklist 31

SERVICE AND MAINTENANCE PROCEDURES 31
- Introduction 31
  - General 31
  - Electrical Controls and Wiring 32
- Care and Maintenance 33
  - Cleaning and/or Replacing Air Filter 33
  - Blower Motor and Wheel 33
  - Cleaning Heat Exchanger 34
- Sequence of Operation 36
- Wiring Diagrams 37
- Troubleshooting 37

Manufacturer reserves the right to discontinue, or change at any time, specifications or designs without notice and without incurring obligations.

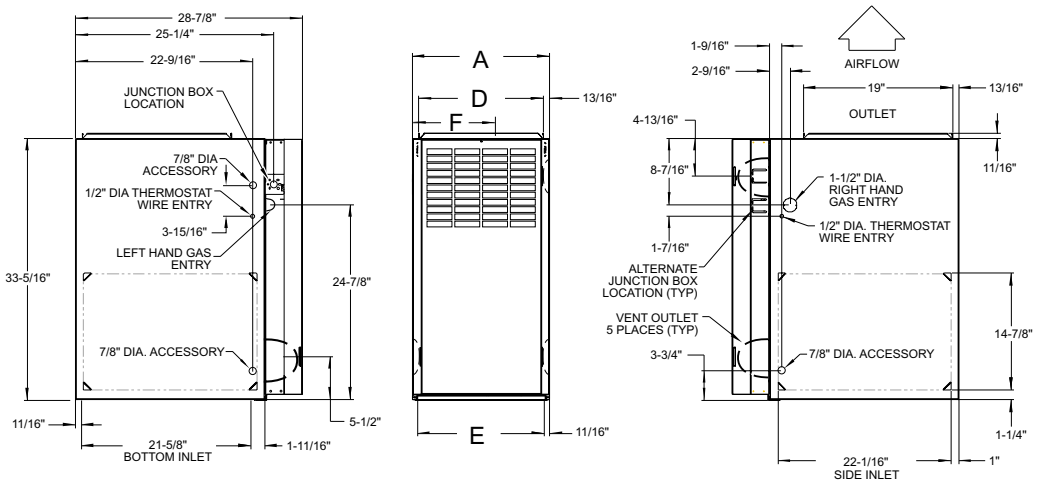

A02304

NOTES:
1. Two additional 7/8-in. diameter holes are located in the top plate.
2. Minimum return-air openings at furnace, based on metal duct. If flex duct is used, see flex duct manufacturer's recommendations for equivalent diameters.
   a. For 800 CFM-16-in. round or 14 1/2 x 12-in. rectangle.
   b. For 1200 CFM-20-in. round or 14 1/2 x 19 1/2-in. rectangle.
   c. For 1600 CFM-22-in. round or 14 1/2 x 22-in. rectangle.
   d. For airflow requirements above 1800 CFM, see Air Delivery table in Product Data literature for specific use of single side inlets. The use of both side inlets, a combination of 1 side and the bottom, or the bottom only will ensure adequate return air openings for airflow requirements above 1800 CFM.

→ **Fig. 1—Dimensional Drawing**

SAFETY CONSIDERATIONS

⚠ CAUTION

→ Application of this furnace should be indoors with special attention given to vent sizing and material, gas input rate, air temperature rise, unit leveling, and unit sizing. Improper installation or misapplication of furnace can require excessive servicing or cause premature component failure.

⚠ WARNING

Improper installation, adjustment, alteration, service, maintenance, or use can cause carbon monoxide poisoning, explosion, fire, electrical shock, or other conditions which may cause personal injury or property damage. Consult a qualified installer, service agency, local gas supplier, or your distributor or branch for information or assistance. The qualified installer or agency must use only factory-authorized and listed kits or accessories when modifying this product. Failure to follow this warning could result in electrical shock, fire, personal injury, or death.

→ Installing and servicing heating equipment can be hazardous due to gas and electrical components. **Only trained and qualified personnel should install, repair, or service heating equipment.** Untrained personnel can perform basic maintenance functions such as cleaning and replacing air filters. All other operations must be performed by trained service personnel. When working on heating equipment, observe precautions in literature, on tags, and on labels attached to or shipped with unit and other safety precautions that may apply.

These instructions cover minimum requirements and conform to existing national standards and safety codes. In some instances, these instructions exceed certain local codes and ordinances, especially those that may not have kept up with changing residential construction practices. We require these instructions as a minimum for a safe installation.

⚠ CAUTION

Sheet metal parts may have sharp edges or burrs. Use care and wear appropriate protective clothing and gloves when handling parts. Failure to follow this caution could result in personal injury.

Wear safety glasses and work gloves. Have fire extinguisher available during start-up and adjustment procedures and service calls.

This is the safety-alert symbol ⚠. When you see this symbol on the furnace and in instructions or manuals, be alert to the potential for personal injury.

Understand the signal words DANGER, WARNING, CAUTION, and NOTE. These words are used with the safety-alert symbol. DANGER identifies the most serious hazards which **will** result in severe personal injury or death. WARNING signifies a hazard which **could** result in personal injury or death. CAUTION is used to identify unsafe practices which **would** result in minor personal injury or product and property damage. NOTE is used to highlight suggestions which will result in enhanced installation, reliability, or operation.

1. Use only with type of gas approved for this furnace. Refer to the furnace rating plate.
2. Install this furnace only in a location and position as specified in the "Location" section of these instructions.
3. Provide adequate combustion and ventilation air to the furnace space as specified in "Air for Combustion and Ventilation" section.
4. Combustion products must be discharged outdoors. Connect this furnace to an approved vent system only, as specified in the "Venting" section of these instructions
5. Never test for gas leaks with an open flame. Use a commercially available soap solution made specifically for the detection of leaks to check all connections, as specified in the "Gas Piping" section.

Table 1—Dimensions (IN.)

UNIT SIZE	A	B	C	VENT CONN*	SHIP WT (LB)
045-08/024045	14-3/16	12-9/16	12-11/16	4	114
045-12/036045	14-3/16	12-9/16	12-11/16	4	117
070-08/024070	14-3/16	12-9/16	12-11/16	4	121
070-12/036070	14-3/16	12-9/16	12-11/16	4	125
070-16/048070	17-1/2	15-7/8	16	4	133
090-14/042090	17-1/2	15-7/8	16	4	136
090-16/048090	21	19-3/8	19-1/2	4	149
090-20/060090	21	19-3/8	19-1/2	4	155
110-12/036110	17-1/2	15-7/8	16	4	144
110-16/048110	21	19-3/8	19-1/2	4	155
110-22/066110	21	19-3/8	19-1/2	4	161
135-16/048135	21	19-3/8	19-1/2	4	158
135-22/066135	24-1/2	22-7/8	23	4	173
155-20/060155	24-1/2	22-7/8	23	4	180

* 5” or 6” vent connector may be required in some cases.

6. Always install furnace to operate within the furnace’s intended temperature-rise range with a duct system which has an external static pressure within the allowable range, as specified in the “Start-Up, Adjustments, and Safety Check” section. See furnace rating plate.
7. When a furnace is installed so that supply ducts carry air circulated by the furnace to areas outside the space containing the furnace, the return air shall also be handled by duct(s) sealed to the furnace casing and terminating outside the space containing the furnace. See “Air Ducts” section.
8. A gas-fired furnace for installation in a residential garage must be installed as specified in the warning box in the “Location” section.
9. The furnace is not to be used for temporary heating of buildings or structures under construction.
10. → These Multipoise Gas-Fired Furnaces are CSA (A.G.A. and C.G.A.) design-certified for natural and propane gases (see furnace rating plate) and for installation in alcoves, attics, basements, closets, utility rooms, crawlspaces, and garages. The furnace is factory-shipped for use with natural gas. A CSA (A.G.A. and C.G.A.) listed gas conversion kit is required to convert furnace for use with propane gas.
11. → See Fig. 2 for required clearances to combustibles.
12. → Maintain a 1-in. clearance from combustible materials to supply air ductwork for a distance of 36 inches horizontally from the furnace. See NFPA 90B or local code for further requirements.
13. → These furnaces SHALL NOT be installed directly on carpeting, tile, or any other combustible material other than wood flooring. In downflow installations, factory accessory floor base MUST be used when installed on combustible materials and wood flooring. Special base is not required when this furnace is installed on manufacturer’s Coil Assembly Part No. CD5 or CK5, or when Coil Box Part No. KCAKC is used.

INTRODUCTION

→ Series 100/A 4–way multipoise Category I fan-assisted furnace is CSA (A.G.A. and C.G.A.) design-certified for natural and propane gas and for installation in alcoves, attics, basements, closets, utility rooms, crawl spaces, and garages. A fan-assisted furnace is an appliance equipped with an integral mechanical means to either draw or force products of combustion through the combustion chamber and/or heat exchanger. The furnace is factory-shipped for use with natural gas. A CSA (A.G.A. and C.G.A.) listed gas conversion kit is required to convert furnace for use with propane gas. This furnace is **not** approved for installation in mobile homes, recreational vehicles, or outdoors.

This furnace is designed for minimum continuous return-air temperature of 60°F db or intermittent operation down to 55°F db such as when used with a night setback thermostat. Return-air temperature must not exceed 85°F db. Failure to follow these return-air limits may affect reliability of heat exchangers, motors, and controls. (See Fig. 3.)

For accessory installation details, refer to the applicable instruction literature.

NOTE: Remove all shipping brackets and materials before operating the furnace.

CODES AND STANDARDS

Follow all national and local codes and standards in addition to these instructions. The installation must comply with regulations of the serving gas supplier, local building, heating, plumbing, and other codes. In absence of local codes, the installation must comply with the national codes listed below and all authorities having jurisdiction.

In the United States and Canada, follow all codes and standards for the following:

Step 1—Safety

- US: National Fuel Gas Code (NFGC) NFPA 54–2002/ANSI Z223.1–2002 and the Installation Standards, Warm Air Heating and Air Conditioning Systems ANSI/NFPA 90B
- CANADA: CAN/CGA-B149.1–and .2–M00 National Standard of Canada. Natural Gas and Propane Installation Codes (NSC-NGPIC)

Step 2—General Installation

- US: Current edition of the NFGC and the NFPA 90B. For copies, contact the National Fire Protection Association Inc., Batterymarch Park, Quincy, MA 02269; or for only the NFGC, contact the American Gas Association, 400 N. Capitol, N.W., Washington DC 20001 or www.NFPA.org.
- CANADA: NSCNGPIC. For a copy, contact Standard Sales, CSA International, 178 Rexdale Boulevard, Etobicoke (Toronto), Ontario, M9W 1R3 Canada

INSTALLATION

MINIMUM INCHES CLEARANCE TO COMBUSTIBLE CONSTRUCTION
DISTANCE MINIMALE EN POUCES AUX CONSTRUCTIONS COMBUSTIBLES

This forced air furnace is equipped for use with natural gas at altitudes 0-10,000 ft (0-3,050m).

An accessory kit, supplied by the manufacturer,shall be used to convert to propane gas use or may be required for some natural gas applications.

This furnace is for indoor installation in a building constructed on site.

This furnace may be installed on combustible flooring in alcove or closet at minimum clearance as indicated by the diagram from combustible material .

This furnace may be used with a Type B-1 Vent and may be vented in common with other gas-fired appliances.

Cette fournaise à air pulsé est équipée pour utilisation avec gaz naturel et altitudes comprises entre 0-3,050m (0-10,000 pi).

Utiliser une trousse de conversion, fournie par le fabricant, pour passer au gaz propane ou pour certaines installations au gaz naturel.

Cette fournaise est prévue pour être installée dans un bâtiment construit sur place.

Cette fournaise peut être installée sur un plancher combustible dans une alcôve ou dans un garde-robe en respectant le minimum d'espace libre des matériaux combustibles, tel qu'indiqué sur le diagramme.

Cette fournaise peut être utilisée avec un conduit d´évacuation de Type B-1 ou connectée au conduit commun d´autres appareils à gaz.

This furnace is approved for UPFLOW, DOWNFLOW, and HORIZONTAL installations.

Cette fournaise est approuvée pour l´installation HORIZONTALE et la circulation d´air VERS LE HAUT et VERS LE BAS.

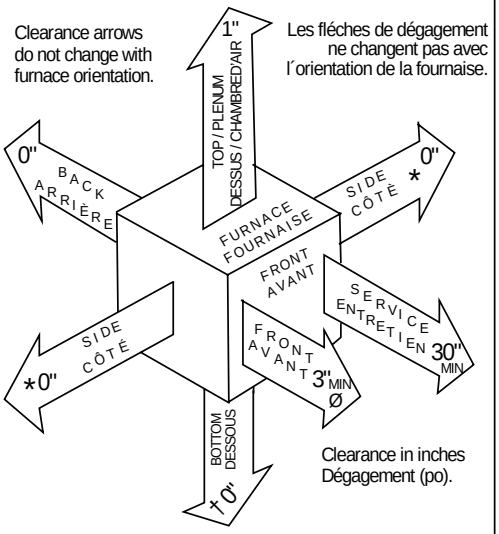

Vent Clearance to combustibles:
For Single Wall vents 6 inches (6 po).
For Type B-1 vent type 1 inch (1 po).

Dégagement de l´évent avec combustibles:
Pour conduit d´évacuation à paroi simple 6 po (6 inches).
Pour conduit d´évacuation de Type B-1 1 po (1 inch).

MINIMUM INCHES CLEARANCE TO COMBUSTIBLE CONSTRUCTION

DOWNFLOW POSITIONS:

† Installation on non-combustible floors only.
For Installation on combustible flooring only when installed on special base, Part No. KGASB0201ALL, Coil Assembly, Part No. CD5 or CK5, or Coil Casing, Part No. KCAKC.

Ø 18 inches front clearance required for alcove.

* Indicates supply or return sides when furnace is in the horizontal position. Line contact only permissible between lines formed by intersections of the Top and two Sides of the furnace jacket, and building joists, studs or framing.

DÉGAGEMENT MINIMUM EN POUCES AVEC ÉLÉMENTS DE CONSTRUCTION COMBUSTIBLES

POUR LA POSITION COURANT DESCENDANT:

† Pour l´installation sur plancher non combustible seulement.
Pour l´installation sur un plancher combustible seulement quand on utilise la base spéciale, pièce n° KGASB0201ALL, l´ensemble serpentin, pièce n° CD5 ou CK5, ou le carter de serpentin, pièce n° KCAKC.

Ø Dans une alcôve, on doit maintenir un dégagement à l´avant de 18 po (450 mm).

* La position indiquée concerne le côté d´entrée ou de retour quand la fournaise est dans la position horizontale.
Le contact n´est permis qu´entre les lignes formées par les intersections du dessus et des deux côtés de la chemise de la fournaise et les solives, montant sous cadre de charpente.

327590-101 REV. B

A02330

→ **Fig. 2—Clearances to Combustibles**

Step 3—Combustion and Ventilation Air

- US: Section 8.3 of the NFGC, Air for Combustion and Ventilation
- CANADA: Part 7 of NSCNGPIC, Venting Systems and Air Supply for Appliances

Step 4—Duct Systems

- US and CANADA: Air Conditioning Contractors Association (ACCA) Manual D, Sheet Metal and Air Conditioning Contractors National Association (SMACNA), or American Society of Heating, Refrigeration, and Air Conditioning Engineers (ASHRAE) 2001 Fundamentals Handbook Chapter 34.

Step 5—Acoustical Lining and Fibrous Glass Duct

- US and CANADA: current edition of SMACNA and NFPA 90B as tested by UL Standard 181 for Class I Rigid Air Ducts

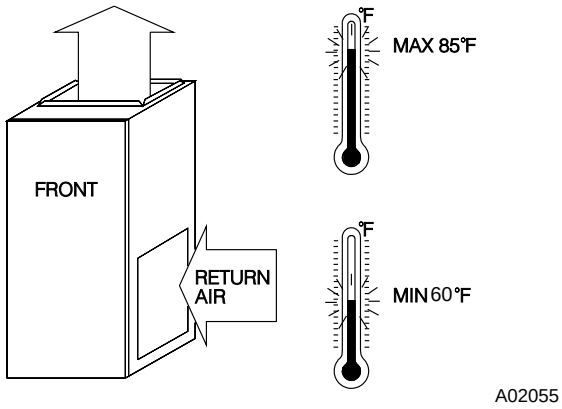

Fig. 3—Return Air Temperature

Step 6—Gas Piping and Gas Pipe Pressure Testing

- US: NFGC; chapters 5, 6, 7, and 12 and National Plumbing Codes
- CANADA: NSCNGPIC Parts 3, 4, 5, A, B, E, and H.

Step 7—Electrical Connections

- US: National Electrical Code (NEC) ANSI/NFPA 70–2002
- CANADA: Canadian Electrical Code CSA C22.1

→ ELECTROSTATIC DISCHARGE (ESD) PRECAUTIONS PROCEDURE

⚠ CAUTION

Electrostatic discharge can affect electronic components. Follow the Electrostatic Discharge Precautions Procedure listed below during furnace installation and servicing to protect the furnace electronic control.
Precautions will prevent electrostatic discharges from personnel and hand tools which are held during the procedure. These precautions will help to avoid exposing the control to electrostatic discharge by putting the furnace, the control, and the person at the same electrostatic potential.

1. Disconnect all power to the furnace. Multiple disconnects may be required. DO NOT TOUCH THE CONTROL OR **ANY** WIRE CONNECTED TO THE CONTROL PRIOR TO DISCHARGING YOUR BODY'S ELECTROSTATIC CHARGE TO GROUND.
2. Firmly touch the clean, unpainted, metal surface of the furnace chassis which is close to the control. Tools held in a person's hand during grounding will be satisfactorily discharged.
3. After touching the chassis, you may proceed to service the control or connecting wires as long as you do nothing to recharge your body with static electricity (for example; DO NOT move or shuffle your feet, do not touch ungrounded objects, etc.).
4. If you touch ungrounded objects (and recharge your body with static electricity), firmly touch a clean, unpainted metal surface of the furnace again before touching control or wires.
5. Use this procedure for installed and uninstalled (ungrounded) furnaces.
6. Before removing a new control from its container, discharge your body's electrostatic charge to ground to protect the control from damage. If the control is to be installed in a furnace, follow items 1 through 4 before bringing the control or yourself in contact with the furnace. Put all used and new controls into containers before touching ungrounded objects.
7. An ESD service kit (available from commercial sources) may also be used to prevent ESD damage.

LOCATION

Step 1—General

This multipoise furnace is shipped in packaged configuration. Some assembly and modifications are required when used in any of the four applications shown in Figure 4.

This furnace must:

- be installed so the electrical components are protected from water.
- **not** be installed directly on any combustible material other than wood flooring (refer to INTRODUCTION).
- be located as close to the chimney/vent and attached to an air distribution system. Refer to Air Ducts section.
- be provided ample space for servicing and cleaning. Always comply with minimum fire protection clearances shown on the furnace clearance to combustible label.

⚠ CAUTION

Do not install furnace in a corrosive or contaminated atmosphere. Make sure all combustion and circulating air requirements are met, in addition to all local codes and ordinances.

⚠ CAUTION

This gas furnace may be used for construction heat provided that:
-The furnace is permanently installed with all electrical wiring, piping, venting and ducting installed according to these installation instructions. A return air duct is provided, sealed to the furnace casing, and terminated outside the space containing the furnace. This prevents a negative pressure condition as created by the circulating air blower, causing a flame rollout and/or drawing combustion products into the structure.
-The furnace is controlled by a thermostat. It may not be "hot wired" to provide heat continuously to the structure without thermostatic control.
-Clean outside air is provided for combustion. This is to minimize the corrosive effects of adhesives, sealers and other construction materials. It also prevents the entrainment of drywall dust into combustion air, which can cause fouling and plugging of furnace components.
-The temperature of the return air to the furnace is no less than 55 degrees F, with no evening setback or shutdown. The use of the furnace while the structure is under construction is deemed to be intermittent operation per our installation instructions.
-The air temperature rise is within the rated rise range on the furnace rating plate, and the firing rate has been set to the nameplate value.
-The filters used to clean the circulating air during the construction process must be either changed or thoroughly cleaned prior to occupancy.
-The furnace, ductwork and filters are cleaned as necessary to remove drywall dust and construction debris from all HVAC system components after construction is completed.

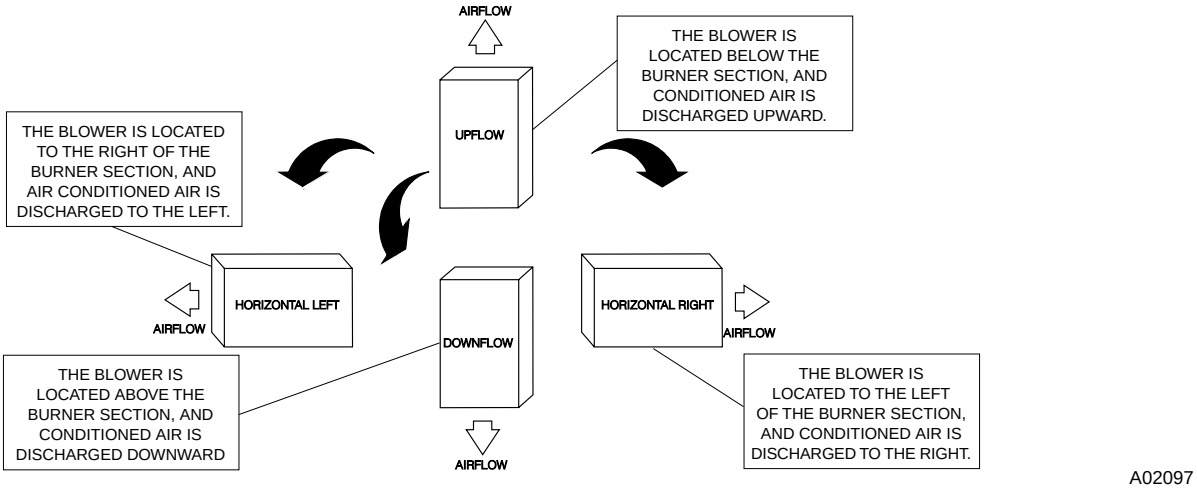

Fig. 4—Multipoise Orientations

⚠ WARNING

→ Do not install the furnace on its back or hang furnace with control compartment facing downward. Safety control operation will be adversely affected. Never connect return-air ducts to the back of the furnace. Failure to follow this warning could result in fire, personal injury, or death. (See Fig. 5.)

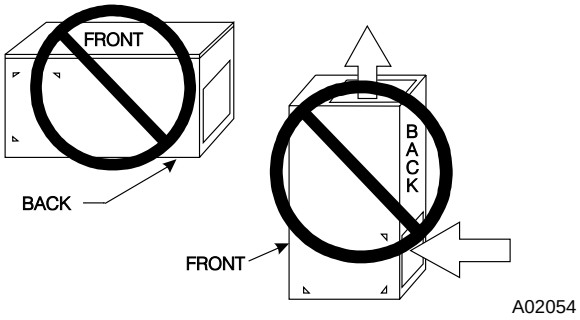

Fig. 5—Prohibit Installation on Back

Step 2—Location Relative to Cooling Equipment

The cooling coil must be installed parallel with, or on the downstream side of the unit to avoid condensation in the heat exchangers. When installed parallel with the furnace, dampers or other flow control must prevent chilled air from entering the furnace. If the dampers are manually operated, they must be equipped with means to prevent operation of either unit unless the damper is in the full-heat or full-cool position.

AIR FOR COMBUSTION AND VENTILATION

Provisions for adequate combustion and ventilation air must be provided in accordance with Section 8.3 of the NFGC, Air for Combustion and Ventilation, or applicable provisions of the local building codes.

Canadian installations must be installed in accordance with NSC-NGPIC Part 7 and all authorities having jurisdiction.

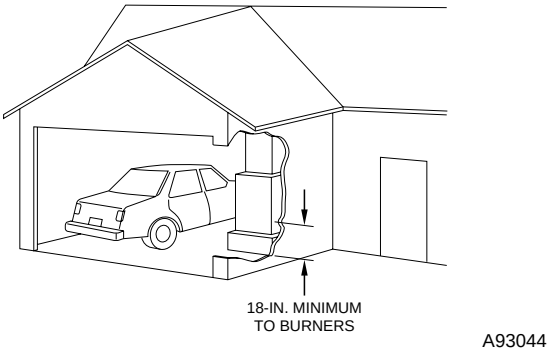

Fig. 6—Installation in a Garage

⚠ WARNING

When the furnace is installed in a residential garage, the burners and ignition sources must be located at least 18 inches above the floor. The furnace must be located or protected to avoid damage by vehicles. When the furnace is installed in a public garage, airplane hangar, or other building having a hazardous atmosphere, the furnace must be installed in accordance with the NFGC or NSCNGPIC. (See Fig. 6.)

⚠ CAUTION

Air for combustion must not be contaminated by halogen compounds, which include fluoride, chloride, bromide, and iodide. These elements are found in aerosol sprays, detergents, bleaches, cleaning solvents, salts, air fresheners, and other household products.

All fuel-burning equipment must be supplied with air for fuel combustion. Sufficient air **must** be provided to avoid negative pressure in the equipment room or space. A positive seal **must** be made between the furnace cabinet and the return-air duct to prevent pulling air from the burner area and from blocked vent safeguard opening.

Table 2–Minimum Free Area of Combustion Air Opening*

FURNACE INPUT (BTUH)	AIR FROM INDOOR UNCONFINED SPACE	OUTDOOR AIR THROUGH VERTICAL DUCTS		OUTDOOR AIR THROUGH HORIZONTAL DUCTS		OUTDOOR AIR THROUGH SINGLE DUCT	
	Free Area of Opening (Sq In.)	Free Area of Opening and Duct (Sq. In.)	Round Pipe In. Dia)	Free Area of Opening and Duct (sq In.)	Round Pipe (In. Dia)	Free Area of Opening and Duct (Sq In.)	Round Pipe (In. Dia)
44,000	100	11	4	22	6	14.7	5
66,000	100	16.5	5	33	7	22.0	6
88,000	100	22.0	6	44.0	8	29.3	7
110,000	110	27.5	6	55	9	36.7	7
132,000	132	33	7	66	10	44.0	8
154,000	154	38.5	7	77	10	51.3	8

* Free area shall be equal to or greater than the sum of the areas of all vent connectors in the confined space. Opening area must be increased if other gas appliances in the space require combustion air.

⚠ CAUTION

→ The operation of exhaust fans, kitchen ventilation fans, clothes dryers, attic exhaust fans or fireplaces could create a NEGATIVE PRESSURE CONDITION at the furnace. Make-up air MUST be provided for the ventilation devices, in addition to that required by the furnace. Refer to Carbon Monoxide Hazard in venting section of these instructions to determine amount of make-up air required.

The requirements for combustion and ventilation air depend upon whether the furnace is located in an unconfined or confined space.

Step 1—Unconfined Space

An **unconfined space** has a volume of at least 50 cu ft for each 1000 Btuh total input for all appliances (furnaces, clothes dryers, water heaters, etc.) in the space.

For example:

FURNACE INPUT (BTUH)	MINIMUM WITH 7–1/2 FT CEILING (SQ FT)
44,000	294
66,000	441
88,000	587
110,000	734
132,000	881
154,000	1028

If the unconfined space is constructed unusually tight, air for combustion and ventilation **must** come from either the outdoors or spaces freely communicating with the outdoors. Combustion and ventilation openings must be equivalent to those used for a confined space (defined below). Return air must not be taken from the room unless an equal or greater amount of air is supplied to the room.

Step 2—Confined Space

A **confined space** has a volume less than 50 cu ft per 1000 Btuh of total input ratings of all appliances installed in that space. A confined space **must** have provisions for supplying air for combustion, ventilation, and dilution of flue gases using one of the following methods in Table 2 and Fig. 7 and 8.

NOTE: When determining the free area of an opening, the blocking effect of louvers, grilles, and screens must be considered. If the free area of the louver or grille design is unknown, assume wood louvers have a 20 percent free area and metal louvers or grilles have a 60 percent free area. Screens must not be smaller than 1/4-in. mesh. Louvers and grilles must be constructed so they cannot be closed.

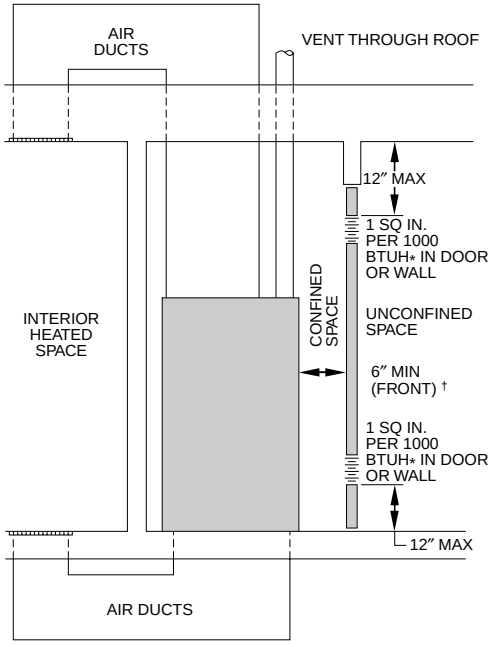

Fig. 7—Confined Space: Air for Combustion and Ventilation from an Unconfined Indoor Space

The opening size depends upon whether air comes from outside of the structure or an unconfined space inside the structure.

1. Air from inside the structure requires 2 openings (for structures not of unusually tight construction):
   a. Each opening must have a minimum free area of not less than 1 sq in per 1000 Btuh of total input rating for all gas utilization equipment in the confined space, but not less than 100 sq in. The minimum dimension of air openings should be no smaller than 3 in. (See Table 2 and Fig. 7.)
   b. If building construction is unusually tight, a permanent opening directly communicating with the outdoors shall be provided. (See next section).
   c. If the furnace is installed on a raised platform to provide a return-air plenum, and return air is taken directly from the hallway or space adjacent to furnace, all air for combustion must come from outdoors.
2. Air from outside the structure requires 1 of the following:
   a. If combustion air is taken from outdoors through 2 vertical ducts, the openings and ducts **must** have at least 1 sq in. of

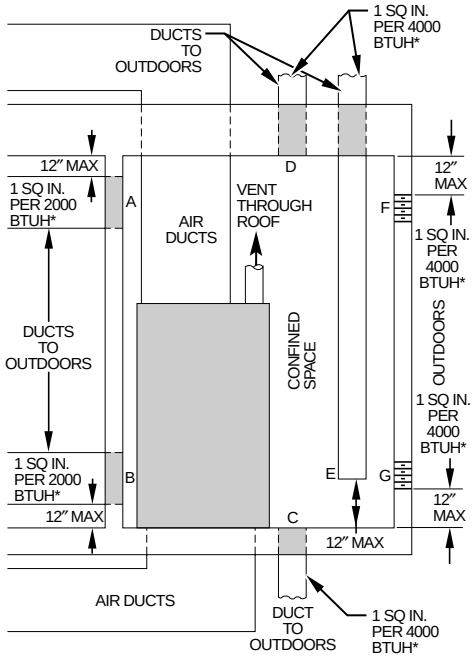

Fig. 8—Confined Space: Air for Combustion and Ventilation from Outdoors

free area per 4000 Btuh of total input for all equipment within the confined space. (See Fig. 8 and Table 2.)

b. If combustion air is taken from outdoors through 2 horizontal ducts, the openings and ducts **must** have at least 1 sq in. of free area per 2000 Btuh of total input for all equipment within the confined space. (See Fig. 8 and Table 2.)

c. If combustion air is taken from the outdoors through a single opening or duct (horizontal or vertical) commencing within 12 in. of the top of the confined space, the opening and duct **must** have at least 1 sq in. of free area per 3000 Btuh of the total input for all equipment within the confined space and not less than the sum of the areas of all vent connectors in the confined space. Equipment clearances to the structure shall be at least 1 in. from the sides and back and 6 in. from the front of the appliances. (See Table 2 and Fig. 8.)

When ducts are used, they must be of the same cross sectional area as the free area of the openings to which they connect. The minimum dimension of ducts must not be less than 3 in.

INSTALLATION

Step 1—Upflow Installation

BOTTOM RETURN AIR INLET

These furnaces are shipped with bottom closure panel installed in bottom return-air opening. Remove and discard this panel when bottom return air is used. To remove bottom closure panel, perform the following:

1. Tilt or raise furnace and remove 2 screws holding bottom filler panel. (See Fig. 9.)
2. Rotate bottom filler panel downward to release holding tabs.
3. Remove bottom closure panel.
4. Reinstall bottom filler panel and screws.

SIDE RETURN AIR INLET

These furnaces are shipped with bottom closure panel installed in bottom return-air opening. This panel MUST be in place when only side return air is used.

→ **NOTE:** Side return-air openings can be used in UPFLOW and most HORIZONTAL configurations. Do not use side return-air openings in DOWNFLOW configuration.

LEVELING LEGS (IF DESIRED)

In upflow position with side return inlet(s), leveling legs may be used. (See Fig. 10.) Install field-supplied, 5/16 X 1 1/2 in. (max) corrosion-resistant machine bolts, washers and nuts.

NOTE: Bottom closure must be used when leveling legs are used. It may be necessary to remove and reinstall bottom closure panel to install leveling legs. To remove bottom closure panel, see Fig. 9.

To install leveling legs:

1. Position furnace on its back. Locate and drill a hole in each bottom corner of furnace. (See Fig. 10.)
2. For each leg, install nut on bolt and then install bolt and nut in hole. (Install flat washer if desired.)
3. Install another nut on other side of furnace base. (Install flat washer if desired.)
4. Adjust outside nut to provide desired height, and tighten inside nut to secure arrangement.
5. Reinstall bottom closure panel if removed.

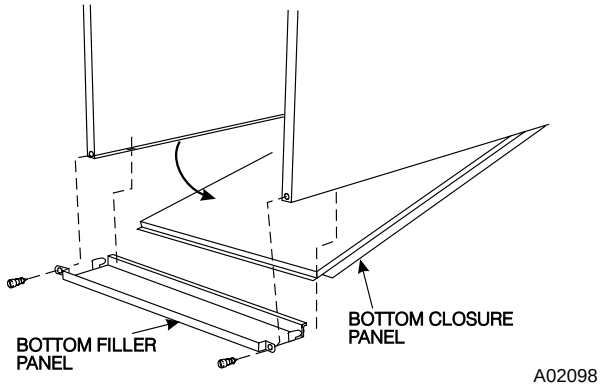

Fig. 9—Removing Bottom Closure Panel

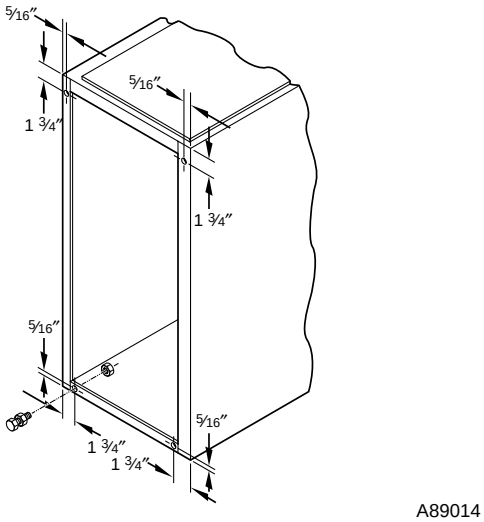

Fig. 10—Leveling Legs

Step 2—Downflow Installation

NOTE: For downflow applications, this furnace is approved for use on combustible flooring when any one of the 3 accessories are used:

- Special Base, KGASB
- Cased Coil Assembly Part No. CD5 or CK5
- Coil Box Part No. KCAKC

1. Determine application being installed from Table 3.
2. Construct hole in floor per Table 3 and Fig. 11.
3. Construct plenum to dimensions specified in Table 3 and Fig. 11.
4. If downflow subbase, KGASB is used, install as shown in Fig. 12. If Coil Assembly Part No. CD5 or CK5 or Coil Box Part No. KCAKC is used, install as shown in Fig. 13.

NOTE: It is recommended that the perforated supply-air duct flanges be completely folded over or removed from furnace when installing the furnace on a factory-supplied cased coil or coil box. To remove the supply-air duct flange, use wide duct pliers or hand seamers to bend flange back and forth until it breaks off. Be careful of sharp edges. (See Fig. 14.)

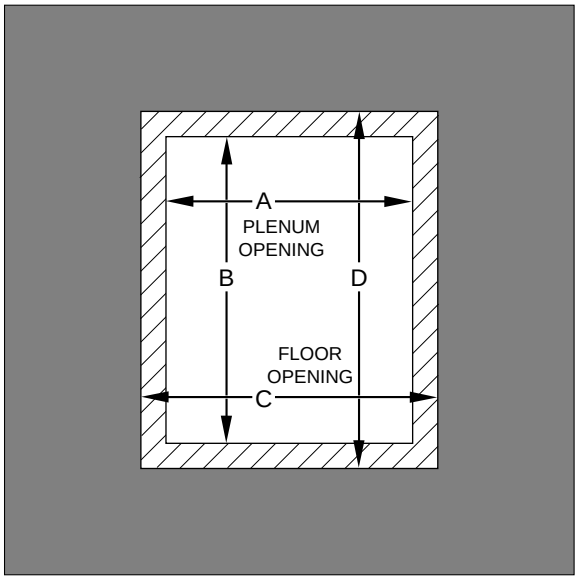

A96283

Fig. 11—Floor and Plenum Opening Dimensions

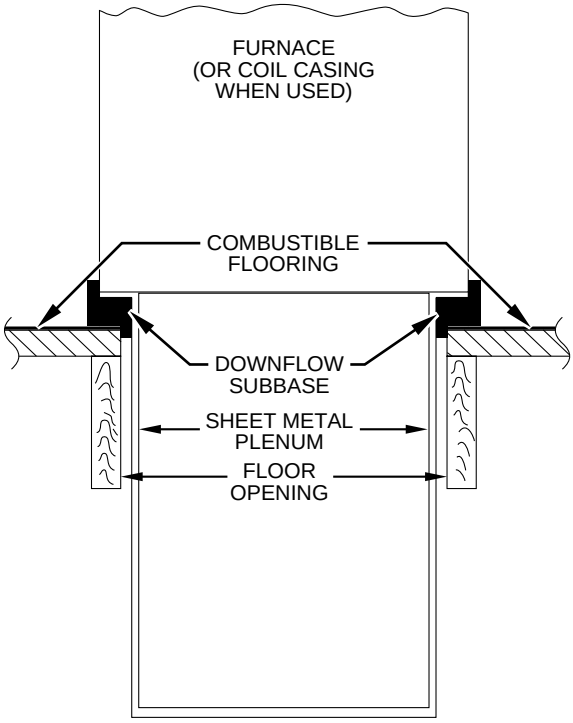

A96285

Fig. 12—Furnace, Plenum, and Subbase Installed on a Combustible Floor

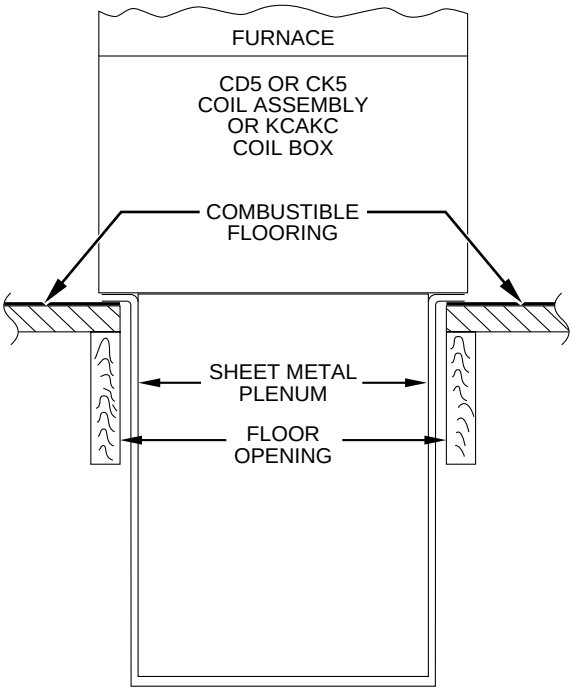

A96284

Fig. 13—Furnace, Plenum, and Coil Assembly or Coil Box Installed on a Combustible Floor

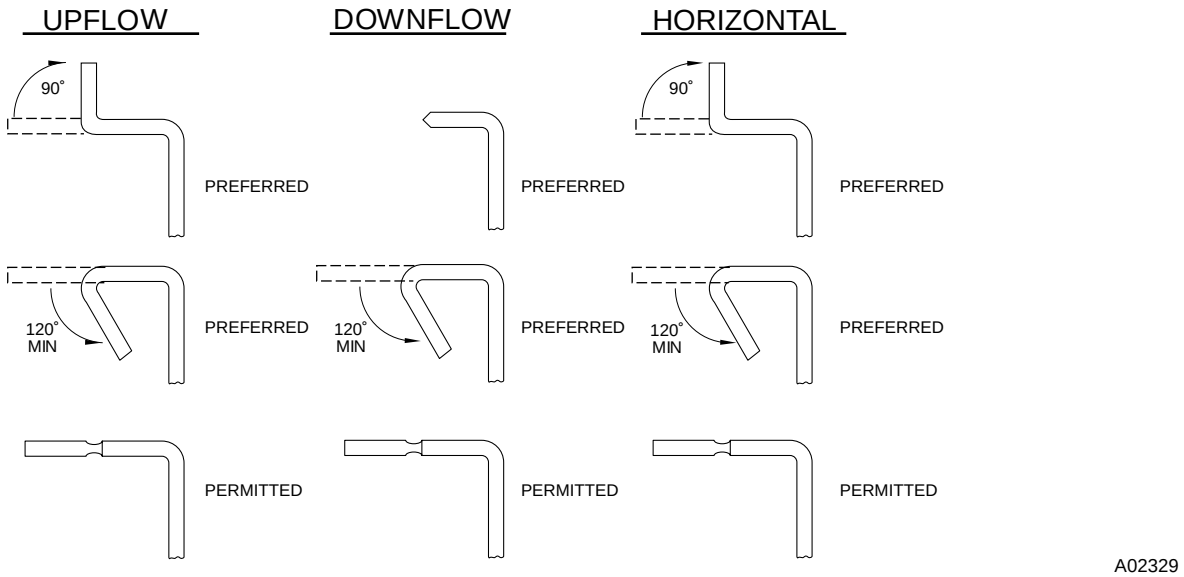

→ **Fig. 14—Duct Flanges**

Table 3—Opening Dimensions (In.)

FURNACE CASING WIDTH	APPLICATION	PLENUM OPENING		FLOOR OPENING	
		A	B	C	D
14–3/16	Upflow Applications on Combustible or Noncombustible Flooring (KGASB subbase not required)	12-11/16	21-5/8	13-5/16	22-1/4
	Downflow Applications on Noncombustible Flooring (KGASB subbase not required)	12-9/16	19	13-3/16	19-5/8
	Downflow applications on combustible flooring **(KGASB subbase required)**	11-13/16	19	13-7/16	20-5/8
	Downflow Applications on Combustible Flooring with CD5 or CK5 Coil Assembly or KCAKC coil box (KGASB subbase not required)	12-5/16	19	13-5/16	20
17–1/2	Upflow Applications on Combustible or Noncombustible Flooring (KGASB subbase not required)	16	21-5/8	16-5/8	22-1/4
	Downflow Applications on Noncombustible Flooring (KGASB subbase not required)	15-7/8	19	16-1/2	19-5/8
	Downflow applications on combustible flooring **(KGASB subbase required)**	15-1/8	19	16-3/4	20-5/8
	Downflow Applications on Combustible Flooring with CD5 or CK5 Coil Assembly or KCAKC coil box (KGASB subbase not required)	15-1/2	19	16-1/2	20
21	Upflow Applications on Combustible or Noncombustible Flooring (KGASB subbase not required)	19-1/2	21-5/8	20-1/8	22-1/4
	Downflow Applications on Noncombustible Flooring (KGASB subbase not required)	19-3/8	19	20	19-5/8
	Downflow applications on combustible flooring **(KGASB subbase required)**	18-5/8	19	20-1/4	20-5/8
	Downflow Applications on Combustible Flooring with CD5 or CK5 Coil Assembly or KCAKC coil box (KGASB subbase not required)	19	19	20	20
24-1/2	Upflow Applications on Combustible or Noncombustible Flooring (KGASB subbase not required)	23	21-1/8	23-5/8	22-1/4
	Downflow Applications on Noncombustible Flooring (KGASB subbase not required)	22-7/8	19	23-1/2	19-5/8
	Downflow applications on Combustible flooring **(KGASB subbase required)**	22-1/8	19	23-3/4	20-5/8
	Downflow Applications on Combustible Flooring with CD5 or CK5 Coil Assembly or KCAKC coil box (KGASB subbase not required)	22-1/2	19	23-1/2	20

⚠ WARNING

→ Do not install the furnace on its back or hang furnace with control compartment facing downward. Safety control operation will be adversely affected. Never connect return-air ducts to the back of the furnace. Failure to follow this warning could result in fire, personal injury, or death.

→ BOTTOM RETURN AIR INLET

These furnaces are shipped with bottom closure panel installed in bottom return-air opening. Remove and discard this panel when bottom return air is used. To remove bottom closure panel, perform the following:

1. Tilt or raise furnace and remove 2 screws holding bottom filler panel. (See Fig. 9.)
2. Rotate bottom filler panel downward to release holding tabs.
3. Remove bottom closure panel.
4. Reinstall bottom filler panel and screws.

Step 3—Horizontal Installation

The furnace can be installed horizontally in an attic or crawl space on either the left-hand (LH) or right-hand (RH) side. The furnace can be hung from floor joists, rafters or trusses or installed on a platform, noncombustible blocks, bricks or pad.

SUSPENDED UNIT SUPPORT

The furnace may be supported under each end with threaded rod, angle iron or metal plumber's strap as shown. (See Fig. 15 and 16.) Secure angle iron to bottom of furnace as shown. Heavy-gauge sheet metal straps (plumber's straps) may be used to suspend the unit from each bottom corner. To prevent screws from pulling out, use 2 # 8 x ¾-in. screw into the side and 2 # 8 x ¾-in. screw in the bottom of the furnace casing for each strap. (See Fig. 15 and 16.)

PLATFORM UNIT SUPPORT

Construct working platform at location where all required furnace clearances are met. (See Fig. 2 and 17.) For furnaces with 1-in. clearance requirement on side, set unit on noncombustible blocks, bricks or angle iron. For crawl space installations, if the unit is not suspended from the floor joists, the ground underneath unit must be level and the unit set on blocks or bricks.

ROLL-OUT PROTECTION

Provide a minimum 17 3/4″ X 22″ piece of sheet metal for roll-out protection in front of burner area for units closer than 12 inches above the combustible deck or suspended units closer than 12-in. to joists. The sheet metal MUST extend underneath the furnace casing by 1 in. with the door removed.

The bottom closure pan on furnaces of widths 17 1/2 in. and larger may be used for roll-out protection when bottom of furnace is used for return air connection. See Fig. 17 for proper orientation of roll-out shield.

→ BOTTOM RETURN AIR INLET

These furnaces are shipped with bottom closure panel installed in bottom return-air opening. Remove and discard this panel when bottom return air is used. To remove bottom closure panel, perform the following:

1. Tilt or raise furnace and remove 2 screws holding bottom filler panel. (See Fig. 9.)
2. Rotate bottom filler panel downward to release holding tabs.
3. Remove bottom closure panel.
4. Reinstall bottom filler panel and screws.

→ SIDE RETURN AIR INLET

These furnaces are shipped with bottom closure panel installed in bottom return-air opening. This panel MUST be in place when only one side return air is used.

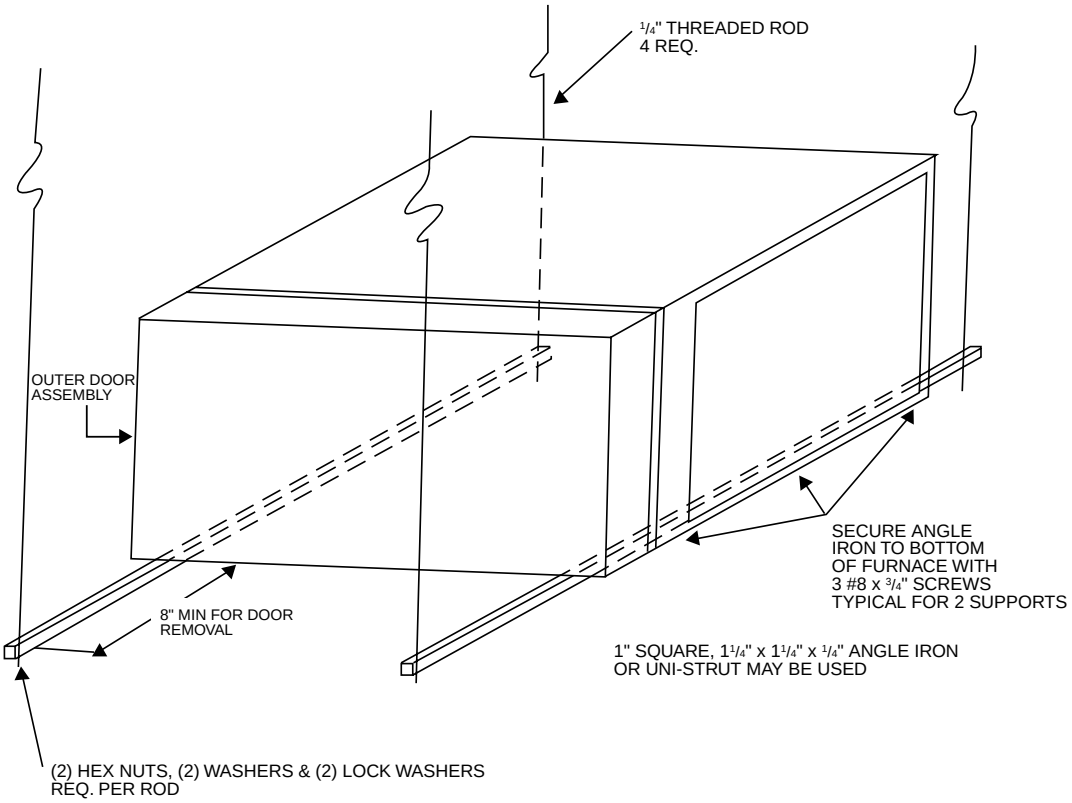

A02345

→ **Fig. 15—Horizontal Unit Suspension**

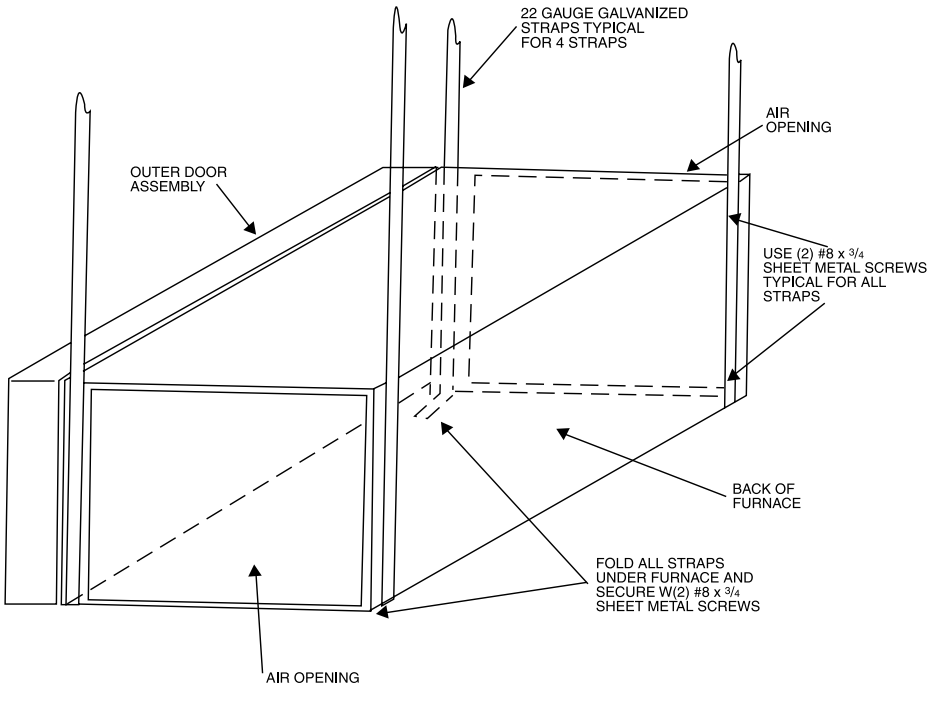

Fig. 16—Horizontal Suspension with Straps

→ Not all horizontal furnaces are approved for side return air connections. (See Fig. 20.)

Step 4—Filter Arrangement

⚠ WARNING

Never operate a furnace without a filter or with filter access door removed. Failure to follow this warning could result in fire, personal injury, or death.

There are no provisions for an internal filter rack in these furnaces.

Deluxe furnaces are shipped with a factory supplied Media Filter Cabinet. The Media Filter Cabinet uses either the factory-supplied standard 1–in. filter or a 4–in. wide Media Filter which can be purchased separately.

Refer to the instructions supplied with Media Cabinet for assembly and installation options.

Step 5—Air Ducts

GENERAL REQUIREMENTS

The duct system should be designed and sized according to accepted national standards such as those published by: Air Conditioning Contractors Association (ACCA), Sheet Metal and Air Conditioning Contractors National Association (SMACNA) or American Society of Heating, Refrigerating and Air Conditioning Engineers (ASHRAE) or consult *The Air Systems Design Guidelines* reference tables available from your local distributor. The duct system should be sized to handle the required system design CFM at the design external static pressure.

When a furnace is installed so that the supply ducts carry air to areas outside the space containing the furnace, the return air must also be handled by a duct(s) sealed to the furnace casing and terminating outside the space containing the furnace.

Secure ductwork with proper fasteners for type of ductwork used. Seal supply- and return-duct connections to furnace with code approved tape or duct sealer.

Flexible connections should be used between ductwork and furnace to prevent transmission of vibration. Ductwork passing through unconditioned space should be insulated and sealed to enhance system performance. When air conditioning is used, a vapor barrier is recommended.

Maintain a 1-in. clearance from combustible materials to supply air ductwork for a distance of 36 in. horizontally from the furnace. See NFPA 90B or local code for further requirements.

DUCTWORK ACOUSTICAL TREATMENT

Metal duct systems that do not have a 90 degree elbow and 10 ft of main duct to the first branch take-off may require internal acoustical lining. As an alternative, fibrous ductwork may be used if constructed and installed in accordance with the latest edition of SMACNA construction standard on fibrous glass ducts. Both acoustical lining and fibrous ductwork shall comply with NFPA 90B as tested by UL Standard 181 for Class 1 Rigid air ducts.

SUPPLY AIR CONNECTIONS

→ For a furnace not equipped with a cooling coil, the outlet duct shall be provided with a removable access panel. This opening shall be accessible when the furnace is installed and shall be of such a size that the heat exchanger can be viewed for possible openings using light assistance or a probe can be inserted for sampling the air stream. The cover attachment shall prevent leaks.

Upflow and Horizontal Furnaces

Connect supply-air duct to flange on furnace supply-air outlet. Bend flange upward to 90° with wide duct pliers. The supply-air duct attachment must ONLY be connected to furnace supply-outlet-air duct flanges or air conditioning coil casing (when used). DO NOT cut main furnace casing to attach supply side air duct, humidifier, or other accessories. All accessories MUST be connected external to furnace main casing.

Downflow Furnaces

Connect supply-air duct to supply-air opening on furnace. The supply-air duct attachment must ONLY be connected to furnace supply/outlet or air conditioning coil casing (when used). When installed on combustible material, supply-air duct attachment must

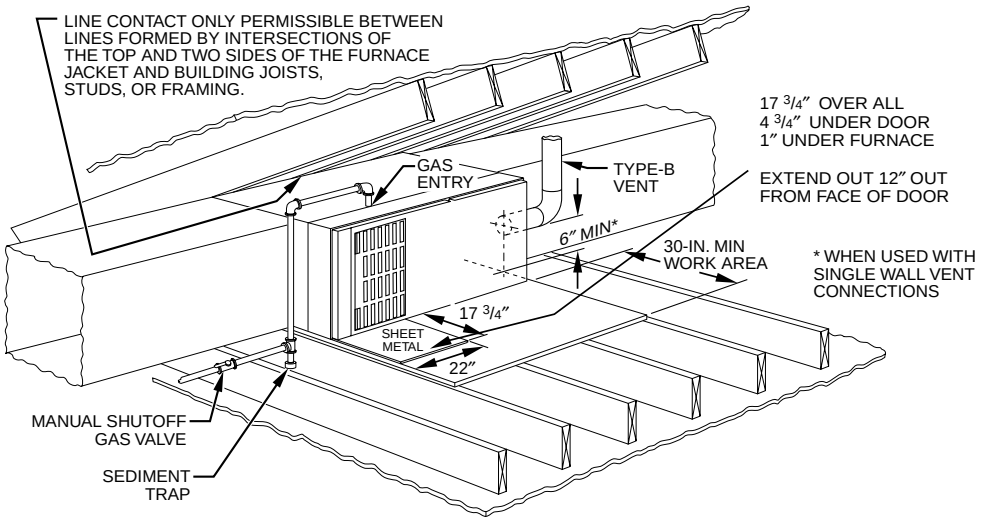

Fig. 17—Typical Attic Installation

ONLY be connected to the accessory subbase KGASB or factory approved air conditioning coil casing. DO NOT cut main furnace casing to attach supply side air duct, humidifier, or other accessories. All accessories MUST be connected external to furnace casing.

RETURN AIR CONNECTIONS

⚠ WARNING

Never connect return-air ducts to the back of the furnace. A failure to follow this warning can cause a fire, personal injury, or death.

Downflow Furnaces

The return-air duct must be connected to return-air opening (bottom inlet) as shown in Fig. 1. DO NOT cut into casing sides (left or right). Side opening is permitted for only upflow and most horizontal furnaces. (See Fig. 19.) Bypass humidifier connections should be made at ductwork or coil casing sides exterior to furnace.

Upflow and Horizontal Furnaces

The return-air duct must be connected to bottom, sides (left or right), or a combination of bottom and side(s) of main furnace casing as shown in Fig. 1. Bypass humidifier may be attached to unused side return air portion of the furnace casing. See Fig. 18, 19, and 20.

→ Not all horizontal furnaces are approved for side return air connections. (See Fig. 20.)

Step 6—Gas Piping

⚠ WARNING

→ Never purge a gas line into a combustion chamber. Never test for gas leaks with an open flame. Use a commercially available soap solution made specifically for the detection of leaks to check all connections. A failure to follow this warning could result in fire, explosion, personal injury, or death.

Gas piping must be installed in accordance with national and local codes. Refer to current edition of NFGC in the U.S., the NSCNG-PIC in Canada.

Installations must be made in accordance with all authorities having jurisdiction. If possible, the gas supply line should be a separate line running directly from meter to furnace.

Refer to Table 4 for recommended gas pipe sizing. Risers must be used to connect to furnace and to meter. Support all gas piping with appropriate straps, hangers, etc. Use a minimum of 1 hanger every 6 ft. Joint compound (pipe dope) should be applied sparingly and only to male threads of joints. Pipe dope must be resistant to the action of propane gas.

→ **Table 4—Maximum Capacity of Pipe***

NOMINAL IRON PIPE SIZE (IN.)	INTERNAL DIAMETER (IN.)	LENGTH OF PIPE (FT)				
		10	20	30	40	50
1/2	0.622	175	120	97	82	73
3/4	0.824	360	250	200	170	151
1	1.049	680	465	375	320	285
1-1/4	1.380	1400	950	770	660	580
1-1/2	1.610	2100	1460	1180	990	900

* Cubic ft of gas per hr for gas pressures of 0.5 psig (14–in. wc) or less and a pressure drop of 0.5–in wc (based on a 0.60 specific gravity gas).
Ref: Table 12.2 NFPA 54-2002.

⚠ CAUTION

→ If local codes allow the use of a flexible gas appliance connector, always use a new listed connector. Do not use a connector which has previously serviced another gas appliance. Black iron pipe shall be installed at the gas valve and extend a minimum of 2 in. outside the furnace.

⚠ CAUTION

Connect gas pipe to gas valve using a backup wrench to avoid damaging gas controls.

⚠ WARNING

Use proper length of pipe to avoid stress on gas control manifold. Failure to follow this warning could result in a gas leak resulting in fire, explosion, personal injury, or death.

→ An accessible manual shutoff valve MUST be installed external to furnace casing and within 6 ft of furnace. A 1/8-in. NPT plugged tapping, accessible for test gage connection, MUST be installed immediately upstream of gas supply connection to furnace and downstream of manual shutoff valve.

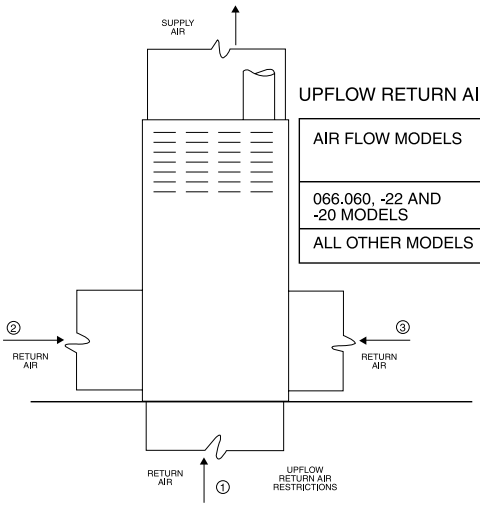

UPFLOW RETURN AIR CONFIGURATIONS AND RESTRICTIONS

AIR FLOW MODELS	RETURN AIR CONNECTION 1 ONLY	RETURN AIR CONNECTION 2 ONLY	RETURN AIR CONNECTION 3 ONLY	RETURN AIR COMBINATIONS OF 1, 2, AND 3
066.060, -22 AND -20 MODELS	YES	YES	YES	YES
ALL OTHER MODELS	YES	YES	YES	YES

A02075

Fig. 18—Upflow Return Air Configurations and Restrictions

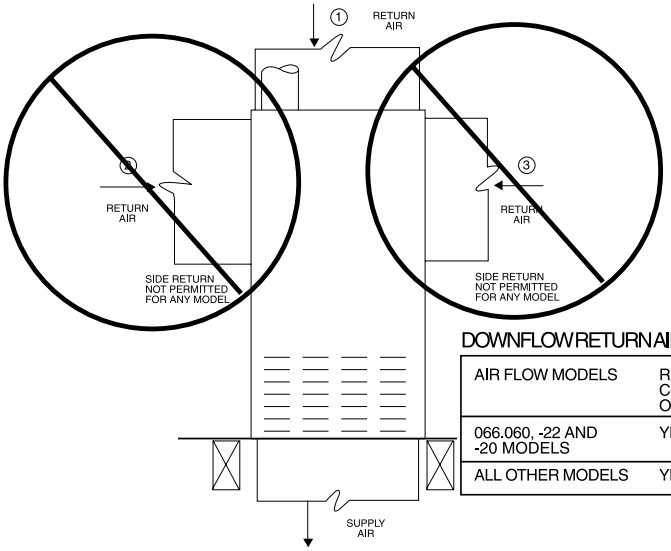

DOWNFLOW RETURN AIR CONFIGURATIONS AND RESTRICTIONS

AIR FLOW MODELS	RETURN AIR CONNECTION 1 ONLY	RETURN AIR CONNECTION 2 ONLY	RETURN AIR CONNECTION 3 ONLY	RETURN AIR COMBINATIONS OF 1, 2, AND 3
066.060, -22 AND -20 MODELS	YES	NO	NO	NO
ALL OTHER MODELS	YES	NO	NO	NO

A02163

Fig. 19—Downflow Return Air Configurations and Restrictions

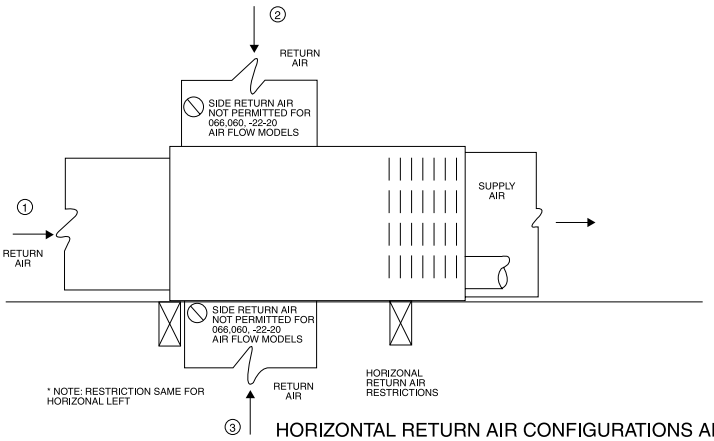

HORIZONTAL RETURN AIR CONFIGURATIONS AND RESTRICTIONS

AIR FLOW MODELS	RETURN AIR CONNECTION 1 ONLY	RETURN AIR CONNECTION 2 ONLY	RETURN AIR CONNECTION 3 ONLY	RETURN AIR COMBINATIONS OF 1, 2, AND 3
066.060, -22 AND -20 MODELS	YES	NO	NO	NO
ALL OTHER MODELS	YES	YES	YES	YES

A02162

Fig. 20—Horizontal Return Air Configurations and Restrictions

→ **NOTE:** The gas valve inlet pressure tap connection is suitable to use as test gage connection providing test pressure DOES NOT exceed maximum 0.5 psig (14-in. wc) stated on gas control valve. (See Fig. 50.)

→ Some installations require gas entry on right side of furnace (as viewed in upflow.) (See Fig. 21a.)

Install a sediment trap in riser leading to furnace as shown in Fig 21b. Connect a capped nipple into lower end of tee. Capped nipple should extend below level of gas controls. Place a ground joint union between gas control manifold and exterior manual equipment gas shutoff valve. A 1/8-in. NPT plugged tapping, accessible for test gage connection, MUST be installed immediately upstream of gas supply connection to furnace and downstream of manual shutoff valve.

→ Piping should be pressure and leak tested in accordance with NFGC in the United States or NSCNGPIC in Canada, local, and national plumbing and gas codes before the furnace has been connected. After all connections have been made, purge lines and check for leakage at furnace prior to operating furnace.

→ If pressure exceeds 0.5 psig (14-in. wc), gas supply pipe must be disconnected from furnace and capped before pressure test. If test pressure is equal to or less than 0.5 psig (14-in. wc), turn off electric shutoff switch located on furnace gas control valve and accessible manual shutoff valve before test. After all connections have been made, purge lines and check for leakage.

→ The gas supply pressure shall be within the maximum and minimum inlet supply pressures marked on the rating plate with the furnace burners ON and OFF.

Step 7—Electrical Connections

⚠ WARNING

Blower access panel door switch opens 115-v power to control. No component operation can occur. Do not bypass or close switch with panel removed. Failure to follow this warning could result in personal injury or death.

See Fig. 24 for field wiring diagram showing typical field 115-v wiring. Check all factory and field electrical connections for tightness.

→ Field-supplied wiring shall conform with the limitations of 63°F (33°C) rise.

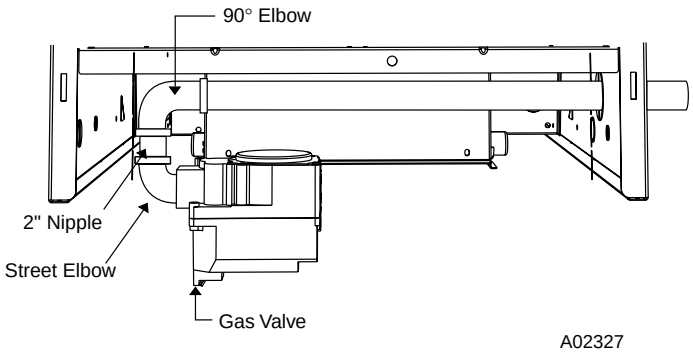

→ **Fig. 21a—Right Side Gas Entry Example**

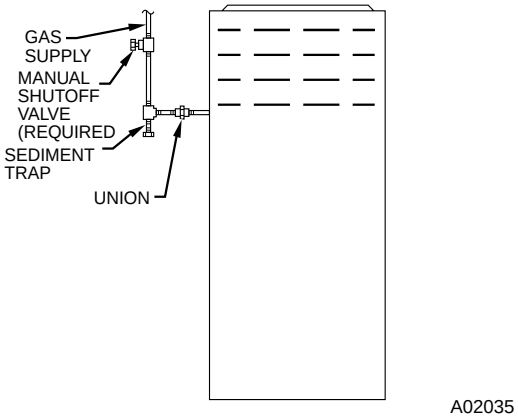

Fig. 21b—Typical Gas Pipe Arrangement

⚠ WARNING

The cabinet MUST have an uninterrupted or unbroken ground according to NEC ANSI/NFPA 70-2002 and Canadian Electrical Code CSA C22.1 or local codes to minimize personal injury if an electrical fault should occur. This may consist of electrical wire, conduit approved for electrical ground or a listed, grounded power cord (where permitted by local code) when installed in accordance with existing electrical codes. Refer to the power cord manufacturer's ratings for proper wire gage. Do not use gas piping as an electrical ground. Failure to follow this warning could result in electrical shock, fire, or death.

⚠ CAUTION

Furnace control must be grounded for proper operation or control will lock out. Control is grounded through green/yellow wire routed to gas valve and manifold bracket screw.

115-V WIRING

Verify that the voltage, frequency, and phase correspond to that specified on unit rating plate. Also, check to be sure that service provided by utility is sufficient to handle load imposed by this equipment. Refer to rating plate or Table 5 for equipment electrical specifications. Make all electrical connections in accordance with National Electrical Code (NEC) ANSI/NFPA 70-2002 and any local codes or ordinances that might apply. For Canadian installations, all electrical connections must be made in accordance with Canadian Electrical Code CSA C22.1 or authorities having jurisdiction.

⚠ CAUTION

Do not connect aluminum wire between disconnect switch and furnace. Use only copper wire.

Use a separate, fused branch electrical circuit with a properly sized fuse or circuit breaker for this furnace. See Table 5 for wire size and fuse specifications. A readily accessible means of electrical disconnect must be located within sight of the furnace.

NOTE: Proper polarity must be maintained for 115-v wiring. If polarity is incorrect, control LED status indicator light will flash rapidly and furnace will NOT operate.

J-BOX RELOCATION

NOTE: If factory location of J-Box is acceptable, go to next section (J-Box Cover Installation).

→ Table 5—Electrical Data

UNIT SIZE	VOLTS-HERTZ-PHASE	OPERATING VOLTAGE RANGE		MAXIMUM UNIT AMPS	UNIT AMPACITY#	MAXIMUM WIRE LENGTH (FT)‡	MAXIMUM FUSE OR CKT BKR AMPS†	MINIMUM WIRE GAGE
		Maximum*	Minimum*					
045-08/024045	115-60-1	127	104	5.6	7.77	48	15	14
045-12/036045	115-60-1	127	104	7.0	9.47	40	15	14
070-08/024070	115-60-1	127	104	5.0	7.06	53	15	14
070-12/036070	115-60-1	127	104	6.7	9.19	41	15	14
070-16/048070**	115-60-1	127	104	9.8	12.59	29	15	14
090-14/042090	115-60-1	127	104	8.1	10.83	35	15	14
090-16/048090	115-60-1	127	104	9.8	12.95	29	15	14
090-20/060090**	115-60-1	127	104	12.9	17.60	35	20	12
110-12/036110	115-60-1	127	104	8.2	10.75	35	15	14
110-16/048110	115-60-1	127	104	10.1	13.12	29	15	14
110-22/066110	115-60-1	127	104	13.7	17.62	33	20	12
135-16/013548	115-60-1	127	104	10.1	13.12	29	15	14
135-22/066135	115-60-1	127	104	14.4	18.55	31	20	12
155-20/060155	115-60-1	127	104	15.0	19.33	30	20	12

* Permissible limits of the voltage range at which the unit operates satisfactorily.
\# Unit ampacity = 125 percent of largest operating component's full load amps plus 100 percent of all other potential operating components' (EAC, humidifier, etc.) full load amps.
† Time-delay type is recommended.
‡ Length shown is as measured 1 way along wire path between unit and service panel for maximum 2 percent voltage drop.
** Preliminary

NOTE: On 14″ wide casing models, the J-Box shall not be relocated to other side of furnace casing when the vent pipe is routed within the casing.

1. Remove screws holding auxiliary J-box. (See Fig. 22.)
2. Cut wire tie on loop in wires to J-box.
3. Locate box to desired location.
4. Fasten J-Box to casing with screws.
5. Route J-box wires within furnace away from sharp edges and hot surfaces.

ELECTRICAL CONNECTION TO J-BOX

⚠ CAUTION

If manual disconnect switch is to be mounted on furnace, select a location where a drill or fastener will not contact electrical or gas components.

1. Attach electrical box to J-Box bracket.
2. Route wires through hole in electrical box and J-Box bracket.
3. Secure ground wire to green screw on J-Box bracket.
4. Connect line voltage leads as shown in Fig. 24.

FOR POWER CORD INSTALLATION

Power cords must be able to handle the electrical requirements listed in Table 5. Refer to power cord manufacturer's listings.

1. Route listed power cord through hole in J-Box.
2. Secure power cord to J-Box bracket with a strain relief bushing or a connector approved for the type of cord used.
3. Secure ground wire to green screw on J-Box bracket.
4. Connect line voltage leads as shown in Fig. 24.

FOR BX CABLE INSTALLATION

1. Route BX cable to hole in J-Box.
2. Secure BX cable to J-Box bracket with connectors approved for the type of cable used.
3. Secure ground wire to green screw on J-Box bracket.
4. Connect line voltage leads as shown in Fig. 24.

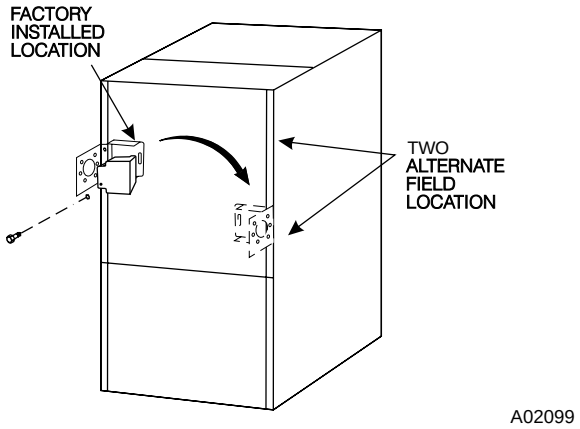

Fig. 22—Relocating J-Box

J-BOX COVER INSTALLATION

1. Remove J-Box cover from blower access door on furnace and reinstall blower access door screw.
2. Fold tab on J-box bracket with pliers.
3. Insert tab of J-box cover into slot of J-box bracket.
4. Secure J-Box cover to bracket with screw provided.
5. Remove U-shaped cut-out from outer door to clear J-box.

24-V WIRING

Make field 24-v connections at the 24-v terminal strip. (See Fig. 23.) Connect terminal Y/Y2 as shown in Fig. 24 for proper cooling operation. Use only AWG No. 18, color-coded, copper thermostat wire. See Fig. 25–31 for additional tstat wiring configurations.

The 24-v circuit contains an automotive-type, 3-amp fuse located on the control. Any direct shorts during installation, service, or maintenance could cause this fuse to blow. If fuse replacement is required, use ONLY a 3-amp fuse of identical size.

ACCESSORIES

1. Electronic Air Cleaner (EAC)
   Connect an accessory Electronic Air Cleaner (if used) using 1/4-in female quick connect terminals to the two male 1/4-in

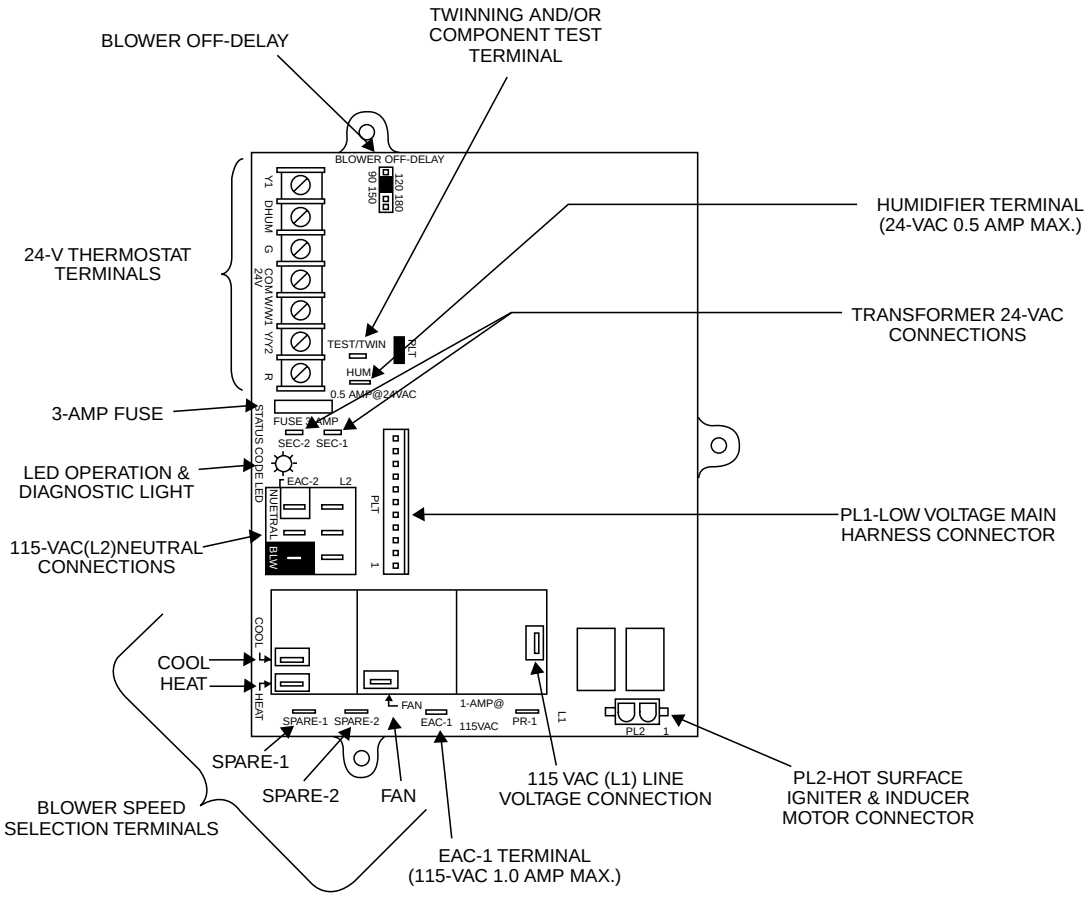

Fig. 23—Furnace Control

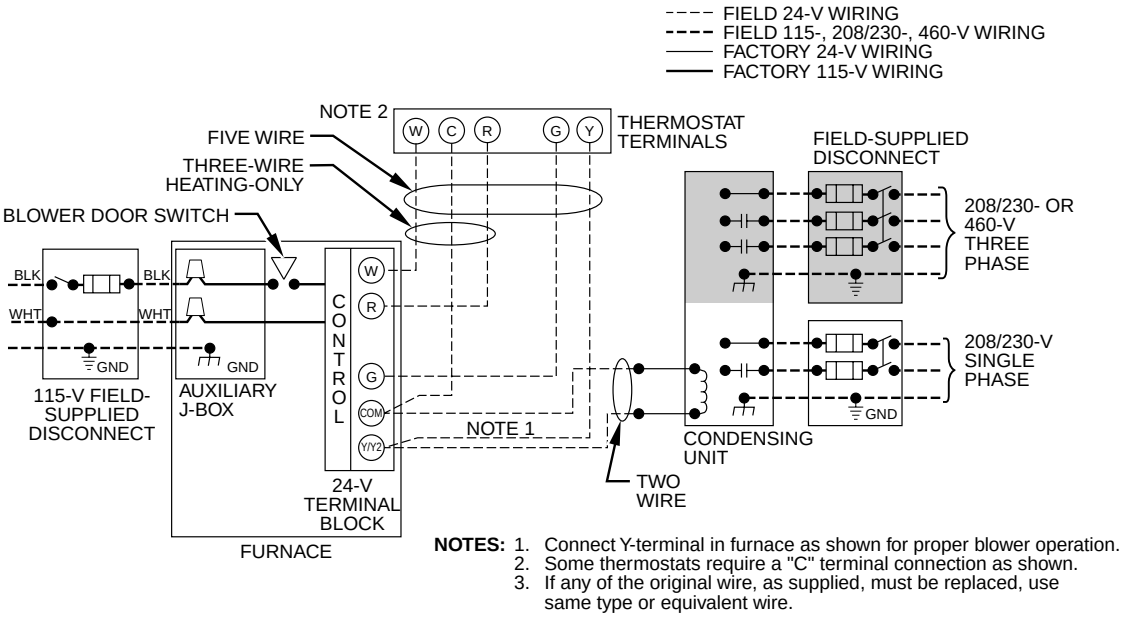

Fig. 24—Heating and Cooling Application Wiring Diagram with 1–Stage Thermostat

quick-connect terminals on the control board marked EAC-1 and EAC-2. The terminals are rated for 115 VAC, 1.0 amps maximum and are energized during blower motor operation.

2. Humidifier (HUM)
   Connect an accessory 24 VAC, 0.5 amp maximum humidifier (if used) to the 1/4-in male quick-connect HUM terminal and COM-24V screw terminal on the control board thermostat strip.

   The HUM terminal is energized when gas valve is energized.

NOTE: A field-supplied, 115-v controlled relay connected to EAC terminals may be added if humidifier operation is desired during blower operation.

⚠ WARNING

DO NOT connect furnace control HUM terminal to HUM (humidifier) terminal on Thermidistat™, Zone Controller or similar device. See Thermidistat™, Zone Controller, thermostat, or controller manufacturer's instructions for proper connection.

Step 8—Venting

→ The furnace shall be connected to a factory built chimney or vent complying with a recognized standard, or a masonry or concrete chimney lined with a lining material acceptable to the authority having jurisdiction. Venting into an unlined masonry chimney or concrete chimney is prohibited.

→ When an existing furnace is removed or replaced in a venting system, the venting system may not be properly sized to vent the attached appliances. An improperly sized Category I venting system could cause the formation of condensate in the furnace and vent, leakage of condensate and combustion products, and spillage of combustion products into the living space, etc.

⚠ WARNING

CARBON MONOXIDE POISONING HAZARD

Failure to follow the steps outlined below for each appliance connected to the venting system being placed into operation could result in carbon monoxide poisoning or death.

The following steps shall be followed for each appliance connected to the venting system being placed into operation, while all other appliances connected to the venting system are not in operation:

1. Seal any unused openings in venting system.
2. Inspect the venting system for proper size and horizontal pitch, as required in the National Fuel Gas Code, ANSI Z223.1/NFPA 54 or the CSA B149.1, Natural Gas and Propane Installation Code and these instructions. Determine that there is no blockage or restriction, leakage, corrosion and other deficiencies, which could cause an unsafe condition.
3. As far as practical, close all building doors and windows and all doors between the space in which the appliance(s) connected to the venting system are located and other spaces of the building.
4. Close fireplace dampers.
5. Turn on clothes dryers and any appliance not connected to the venting system. Turn on any exhaust fans, such as range hoods and bathroom exhausts, so they are operating at maximum speed. Do not operate a summer exhaust fan.
6. Follow the lighting instructions. Place the appliance being inspected into operation. Adjust the thermostat so appliance is operating continuously.
7. Test for spillage from draft hood equipped appliances at the draft hood relief opening after 5 minutes of main burner operation. Use the flame of a match or candle.
8. If improper venting is observed during any of the above tests, the venting system must be corrected in accordance with the National Fuel Gas Code, ANSI Z223.1/NFPA 54 and/or CSA B149.1, Natural Gas and Propane Installation Codes.
9. After it has been determined that each appliance connected to the venting system properly vents when tested as outlined above, return doors, windows, exhaust fans, fireplace dampers and any other gas-fired burning appliance to their previous conditions of use.

→ Vent system or vent connectors may need to be resized. For any other appliances when resizing vent systems or vent connectors, system or connector must be sized to approach minimum size as determined using appropriate table found in the NFGC or NSCNGPIC.

GENERAL VENTING REQUIREMENTS

Follow all safety codes for proper vent sizing and installation requirements, including local building codes, the National Fuel Gas Code (NFGC) ANSI Z223.1-2002/NFPA 54-2002, Parts 7 and 10 in the United States or the National Standard of Canada, Natural Gas and Propane Installation Code (NSCNGPIC) CSA-B149.1-00, Section 7 and Appendix C in Canada.

These furnaces are design-certified as Category I furnaces in accordance with ANSI Z21.47a/CSA 2.3a-2001 and operate with a non-positive vent static pressure to minimize the potential for vent gas leakage. Category I furnaces operate with a flue loss not less than 17 percent to minimize the potential for condensation in the venting system. These furnaces are approved for common venting and multistory venting with other fan assisted or draft hood equipped appliances in accordance with the NFCG or the NSCNGPIC.

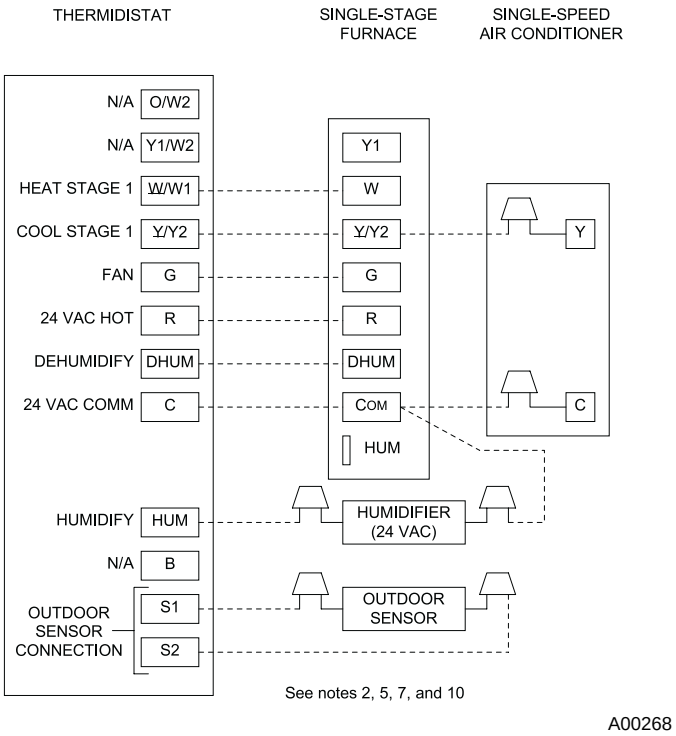

Fig. 25–Single-Stage Furnace with Single-Speed Air Conditioner

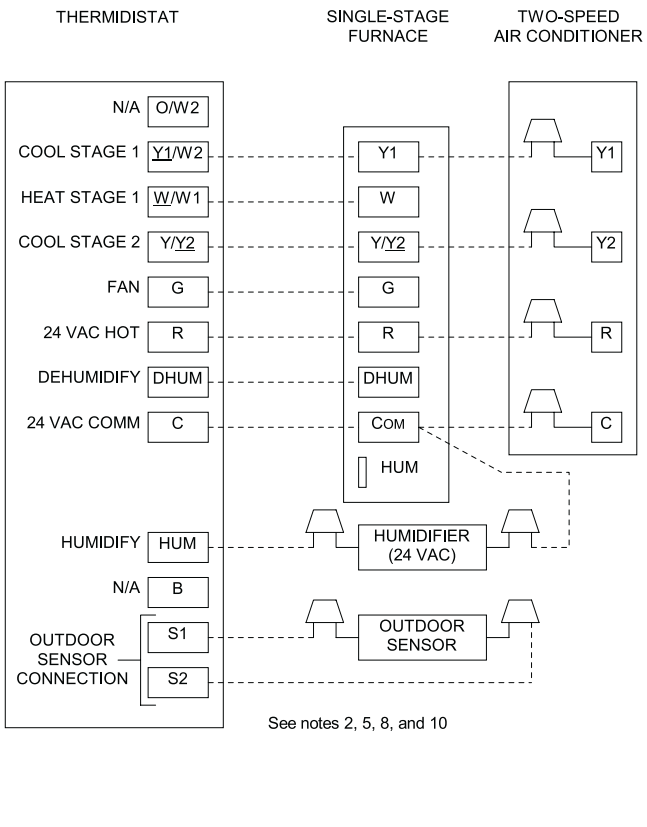

Fig. 26–Single Stage Furnace with Two-Speed Air Conditioner

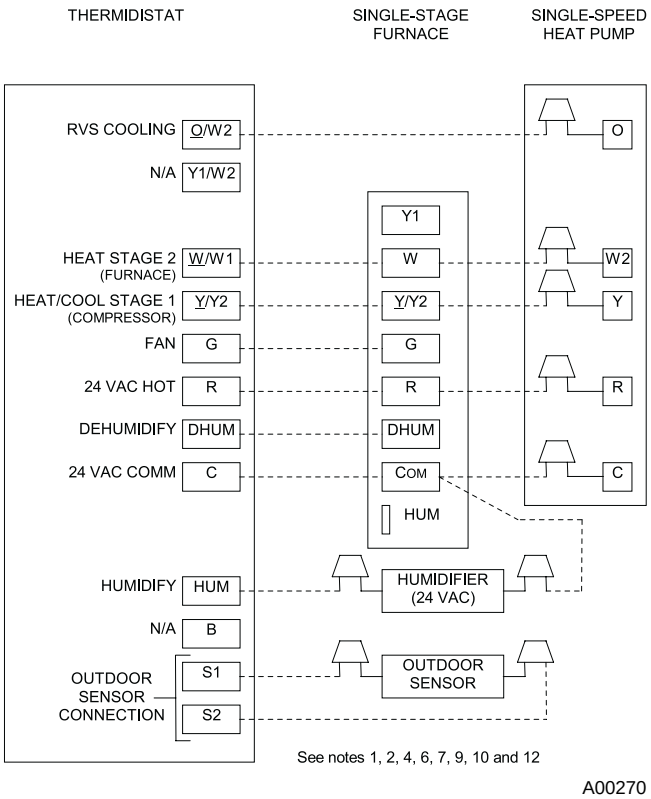

Fig. 27–Single-Stage Furnace with Single-Speed Heat Pump (Dual Fuel)

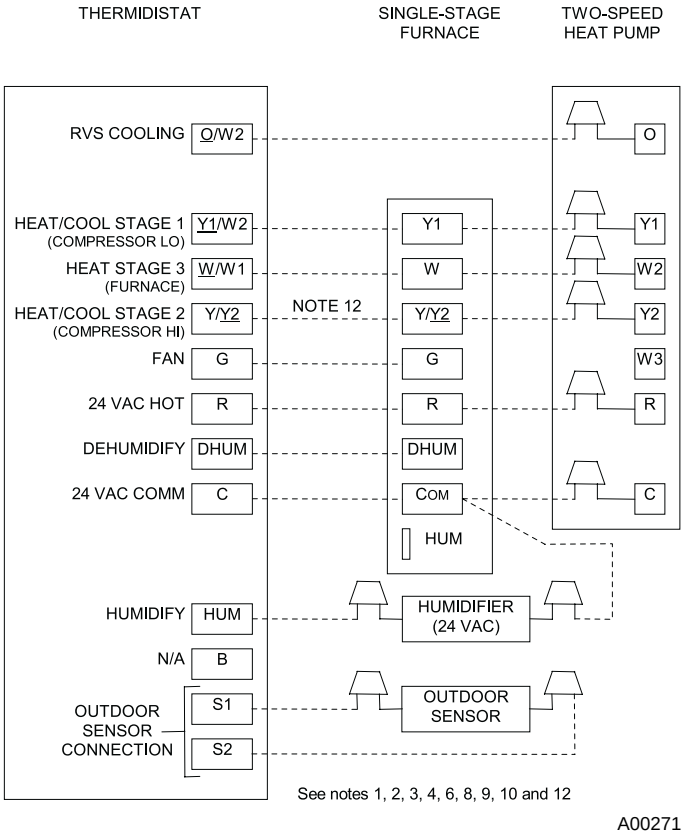

Fig. 28–Single-Stage Furnace with Two-Speed Heat Pump (Dual Fuel)

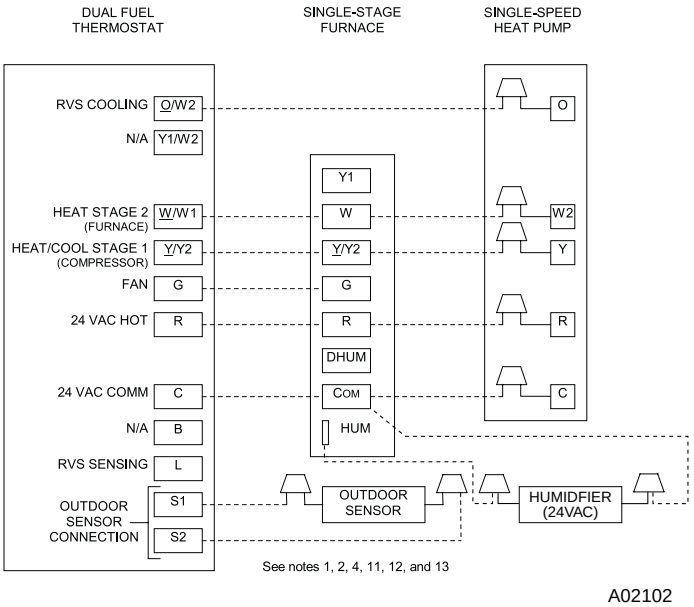

Fig. 29–Dual Fuel Thermostat with Single-Stage Furnace and Single-Speed Heat Pump

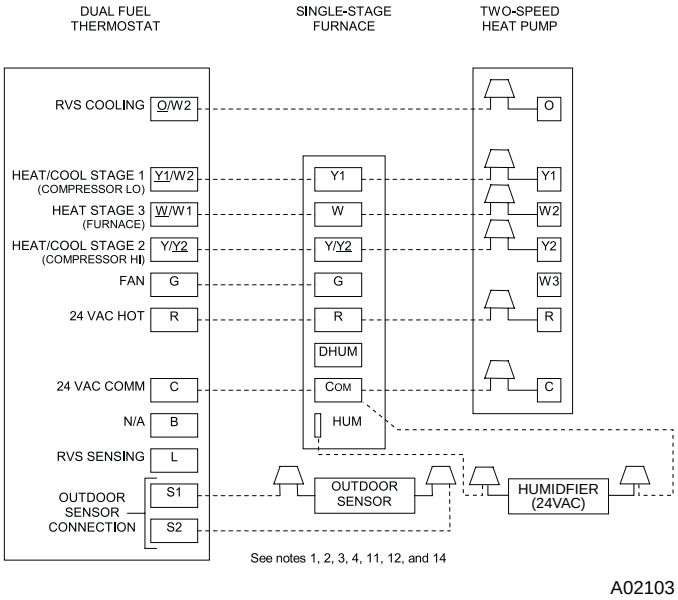

Fig. 30–Dual Fuel Thermostat with Single-Stage Furnace and Two-Speed Heat Pump

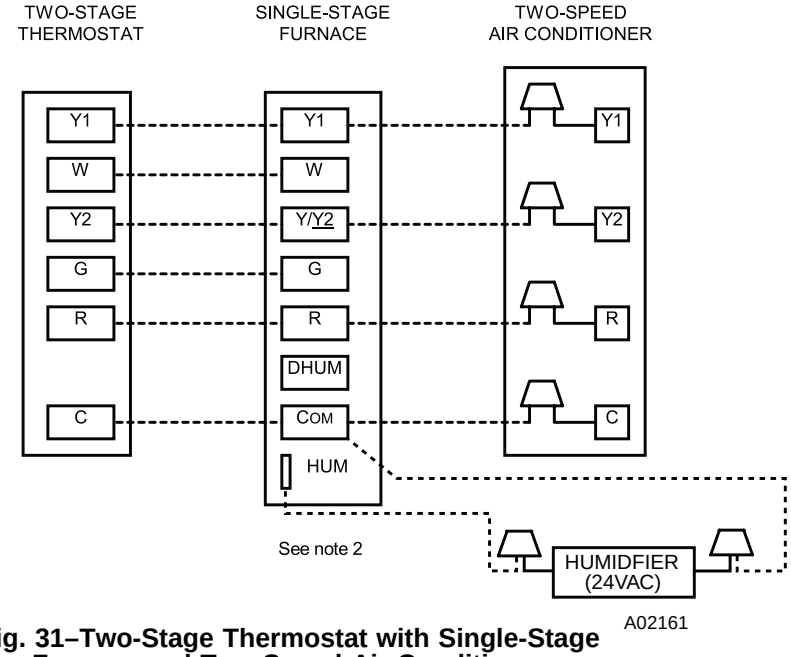

Fig. 31–Two-Stage Thermostat with Single-Stage Furnace and Two-Speed Air Conditioner

Notes For Figure 25-31

1. Heat pump **MUST** have a high pressure switch for dual fuel applications.
2. Refer to outdoor equipment Installation Instructions for additional information and setup procedure.
3. Select the “ZONE” position on the two-speed heat pump control.
4. Outdoor Air Temperature Sensor must be attached in all dual fuel applications.
5. Dip switch No. 1 on Thermidistat should be set in **OFF** position for air conditioner installations. This is factory default.
6. Dip switch No. 1 on Thermidistat should be set in**ON** position for heat pump installations.
7. Dip switch No. 2 on Thermidistat should be set in **OFF** position for single-speed compressor operation. This is factory default.
8. Dip switch No. 2 on Thermidistat should be set in **ON** position for two-speed compressor operation.
9. Configuration Option No. 10 “Dual Fuel Selection” must be turned**ON** in all dual fuel applications.
10. **NO** connection should be made to the furnace HUM terminal when using a Thermidistat.
11. The RVS Sensing terminal “L” should not be connected. This is internally used to sense defrost operation.
12. **DO NOT SELECT** the “FURNACE INTERFACE” or “BALANCE POINT” option on the two-speed heat pump control board. This is controlled internally by the Thermidistat/Dual Fuel Thermostat.
13. Dip switch D on Dual Fuel Thermostat should be set in **OFF** position for single-speed compressor operation. This is factory default.
14. Dip switch D on Dual Fuel Thermostat should be set in **ON** position for two-speed compressor operation.

The following information and warning must be considered in addition to the requirements defined in the NFGC and the NSCNGPIC.

1. If a vent (common or dedicated) becomes blocked, the furnace will be shut off by the draft safeguard switch located on the vent elbow.

⚠ WARNING

Do not bypass the draft safeguard switch, as an unsafe condition could exist which must be corrected. Failure to follow this warning could result in a build-up of carbon monoxide and lead to personal injury or death.

2. Do not connect this appliance to a single-wall dedicated or common vent. The dedicated or common vent is considered to be the vertical portion of the vent system that terminates outdoors.
3. Vent connectors serving Category I furnaces shall not be connected into any portion of a mechanical draft system operating under positive pressure.
4. In the U.S., do not vent this appliance with any solid fuel burning appliance. In Canada, check with the authority having jurisdiction for approval on use with solid fuel burning appliance.
5. → Category I furnaces must be vented vertically or nearly vertically unless equipped with a listed power ventor.
6. → Do not vent this appliance into an unlined masonry chimney. Refer to Chimney Inspection Chart, Fig. 32.

MASONRY CHIMNEY REQUIREMENTS

⚠ CAUTION

These furnaces are CSA design-certified for use in exterior tile-lined masonry chimneys with a factory accessory Chimney Adapter Kit. Refer to the furnace rating plate for correct kit usage. The Chimney Adapter Kits are for use with ONLY furnaces having a Chimney Adapter Kit numbers marked on the furnace rating plate.

If a clay tile-lined masonry chimney is being used and it is exposed to the outdoors below the roof line, relining might be required. Chimneys shall conform to the Standard for Chimneys, Fireplaces, Vents, and Soild Fuel Burning Appliances ANSI/NFPA 211-2000 in the United States and to a Provincial or Territorial Building Code in Canada (in its absence, the National Building Code of Canada) and must be in good condition.

U.S.A.-Refer to Sections 13.1.9 and 13.2.20 of the NFGC or the authority having jurisdiction to determine whether relining is required. If relining is required, use a properly sized listed metal liner, Type-B vent, or a listed alternative venting design.

NOTE: See the NFGC, 13.2.20 regarding alternative venting design and the Exception, which cover installations such as the Chimney Adapter Kits KGACA02014FC and KGACA02015FC, which are listed for use with these furnaces.

The Chimney Adapter Kit is listed alternative venting system for these furnaces. See the kit instructions for complete details.

Canada-This furnace is permitted to be vented into a clay tile-lined masonry chimney that is exposed to the outdoors below the roof line, provided:

1. Vent connector is Type-B double-wall, and
2. This furnace is common vented with at least 1 draft hood-equipped appliance, and
3. The combined appliance input rating is less than the maximum capacity given in Table A, and
4. The input rating of each space heating appliance is greater than the minimum input rating given in Table B for the local winter design temperature. Chimneys having interanl areas greater than 38 sqyare inches require furnace input ratings greater than the input ratings of these furnaces. See footnote at bottom of Table B, and
5. The authority having jurisdiction approves.

If all of these conditions cannot be met, an alternative venting design shall be used, such as the listed chimney adapter kit with these furnaces, which are listed for use with the kit, a listed chimney-lining system, or a Type-B common vent.

Exterior Masonry Chimney FAN + NAT Installations with Type-B Double-Wall Vent Connectors

Table A—Combined Appliance Maximum Inut Rating in Thousands of BTU per Hour

VENT HEIGHT (FT)	INTERNAL AREA OF CHIMNEY (SQ. IN.)			
	12	19	28	38
6	74	119	178	257
8	80	130	193	279
10	84	138	207	299
15	NR	152	233	334
20	NR	NR	250	368
30	NR	NR	NR	404

Table B—Minimum Allowable Input Rating of Space-Heating Appliance in Thousands of BTU per Hour

	VENT HEIGHT (FT)	INTERNAL AREA OF CHIMNEY (SQ. IN.)			
		12	19	28	38
Local 99% Winter Design Temperature: 17 to 26 degrees F*					
17 to 26 F	6	0	55	99	141
	8	52	74	111	154
	10	NR	90	125	169
	15	NR	NR	167	212
	20	NR	NR	212	258
	30	NR	NR	NR	362
Local 99% Winter Design Temperature: 5 to 16 degrees F*					
5 to 16 F	6	NR	78	121	166
	8	NR	94	135	182
	10	NR	111	149	198
	15	NR	NR	193	247
	20	NR	NR	NR	293
	30	NR	NR	NR	377
Local 99% Winter Design Temperature: -10 to 4 degrees F*					
-10 to 4 F	6	NR	NR	145	196
	8	NR	NR	159	213
	10	NR	NR	175	231
	15	NR	NR	NR	283
	20	NR	NR	NR	333
	30	NR	NR	NR	NR
Local 99% Winter Design Temperature: -11 degrees F or lower*					
-11 F or lower		Not recommended for any vent configuration			

*The 99% Winter Design Dry-Bulb (db) temperatures are found in the 1993 ASHRAE Fundamentals Handbook, Chapter 24, Table 1 (United States) and 2 (Canada), or use the 99.6% heating db temperatures found in the 1997 or 2001 ASHRAE Fundamentals Handbook, Climatic Design Information chapter, Table 1A (United States) and 2A (Canada).

Inspections before the sale and at the time of installation will determine the acceptability of the chimney or the need for repair and/or (re)lining. Refer to the Fig. 32 to perform a chimney inspection. If the inspection of a previously used tile-lined chimney:

a. Shows signs of vent gas condensation, the chimney should be relined in accordance with local codes and the authority having jurisdiction. The chimney should be relined with a listed metal liner, Type-B vent, or a listed chimney adapter kit shall be used to reduce condensation. If a condensate drain is required by local code, refer to the NFGC, Section 7.9 for additional information on condensate drains.

b. Indicates the chimney exceeds the maximum permissible size in the tables, the chimney should be rebuilt or relined to conform to the requirements of the equipment being installed and the authority having jurisdiction.

A chimney without a clay tile liner, which is otherwise in good condition, shall be rebuilt to conform to ANSI/NFPA 211 or be lined with a UL listed (ULC listed in Canada) metal liner or UL listed Type-B vent. Relining with a listed metal liner or Type-B vent is considered to be a vent-in-a-chase.

If a metal liner or Type-B vent is used to line a chimney, no other appliance shall be vented into the annular space between the chimney and the metal liner.

APPLIANCE APPLICATION REQUIREMENTS

Appliance operation has a significant impact on the performance of the venting system. If the appliances are sized, installed, adjusted, and operated properly, the venting system and/or the appliances should not suffer from condensation and corrosion. The venting system and all appliances shall be installed in accordance with applicable listings, standards, and codes.

The furnace should be sized to provide 100 percent of the design heating load requirement plus any margin that occurs because of furnace model size capacity increments. Heating load estimates can be made using approved methods available from Air Conditioning Contractors of America (Manual J); American Society of Heating, Refrigerating, and Air-Conditioning Engineers; or other approved engineering methods. Excessive oversizing of the furnace could cause the furnace and/or vent to fail prematurely.

When a metal vent or metal liner is used, the vent must be in good condition and be installed in accordance with the vent manufacturer's instructions.

To prevent condensation in the furnace and vent system, the following precautions must be observed:

1. The return-air temperature must be at least 60°F db except for brief periods of time during warm-up from setback at no lower than 55°F db or during initial start-up from a standby condition.
2. Adjust the gas input rate per the installation instructions. Low gas input rate causes low vent gas temperatures, causing condensation and corrosion in the furnace and/or venting system. Derating is permitted only for altitudes above 2000 ft.

⚠ CAUTION

Personal injury can result form sharp metal edges, etc. Be careful when removing parts. Gloves and safety glasses should be worn when servicing equipment.

3. Adjust the air temperature rise range to the midpoint or slightly above. Low air temperature rise can cause low vent gas temperature and potential for condensation problems.
4. Set the thermostat heat anticipator or cycle rate to reduce short cycling.

Air for combustion must not be contaminated by halogen compounds which include chlorides, fluorides, bromides, and iodides. These compounds are found in many common home products such as detergent, paint, glue, aerosol spray, bleach, cleaning solvent, salt, and air freshener, and can cause corrosion of furnaces and vents. Avoid using such products in the combustion-air supply.

CHIMNEY INSPECTION CHART

For additional requirements refer to the National Fuel Gas Code NFPA 54/ANSI Z223.1 and ANSI/NFPA 211 Chimneys, Fireplaces, Vents, and Solid Fuel Burning Appliances in the U.S.A. or to the Canadian installation Codes CSA-B149.1 in Canada.

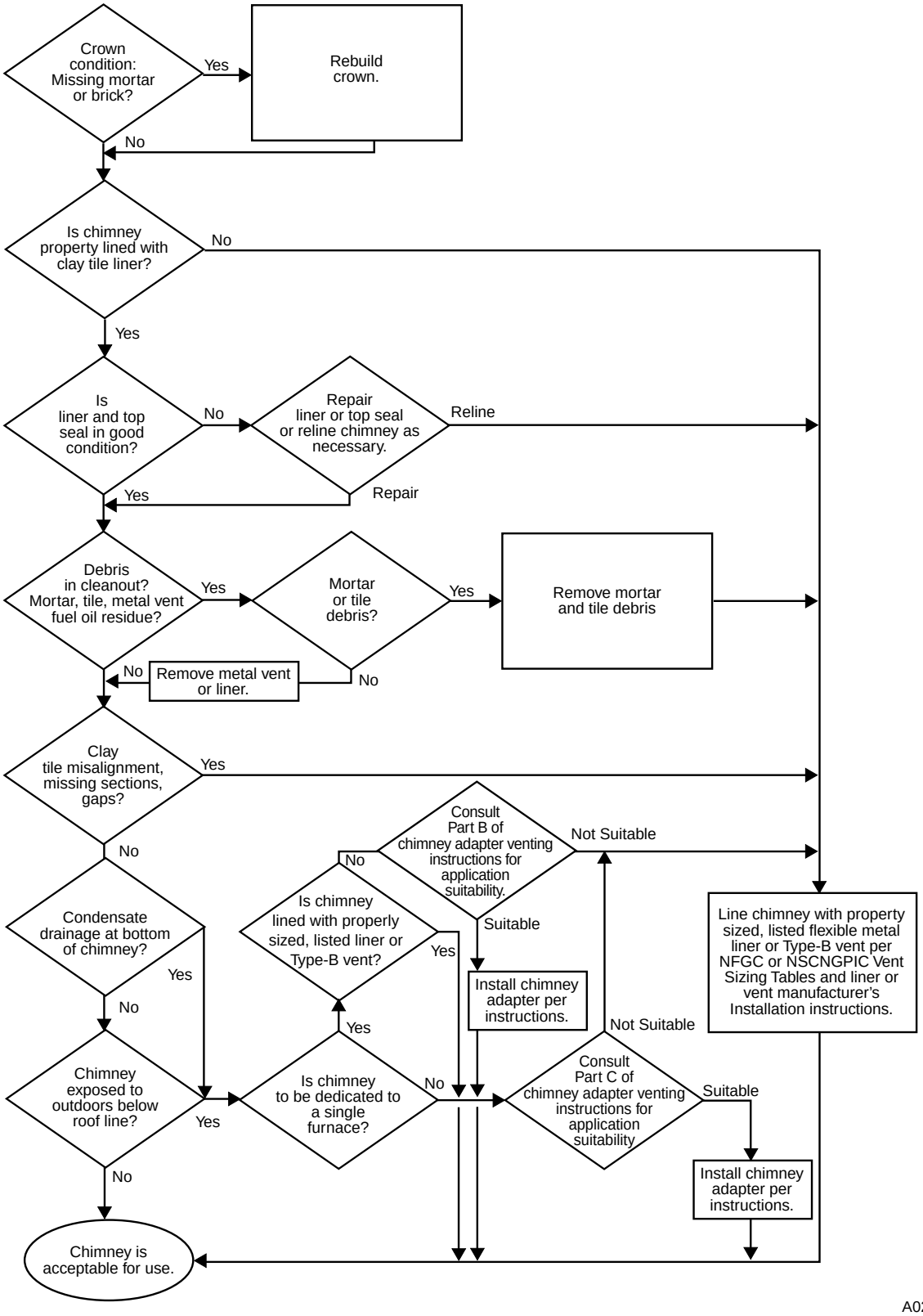

A02101

Fig. 32—Chimney Inspection Chart

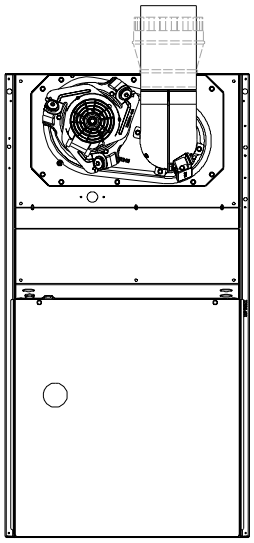

SEE NOTES: 1,2,4,7,8,9

A02058

Fig. 33—Upflow Application-Vent Elbow Up

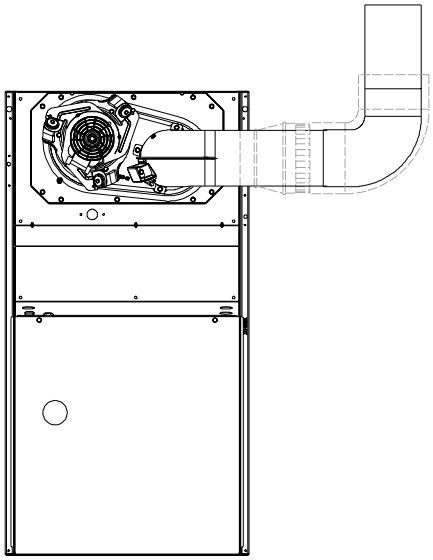

SEE NOTES: 1,2,3,4,7,8,9

A02059

Fig. 34—Upflow Application-Vent Elbow Right

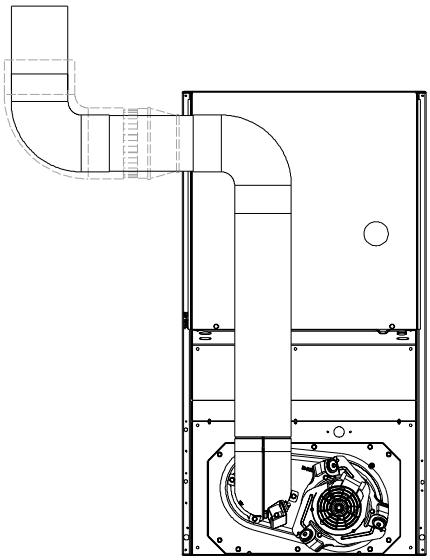

SEE NOTES:1,2,3,4,5,7,8,9

A02060

Fig. 35—Downflow Application-Vent Elbow Up then Left

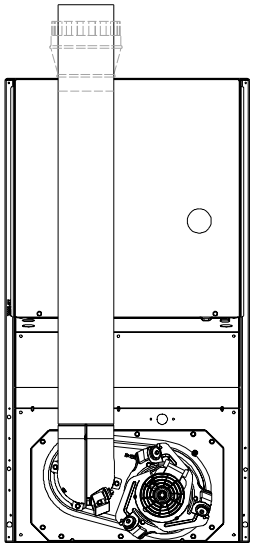

SEE NOTES: 1,2,4,5,7,8,9

A02061

Fig. 36—Downflow Application-Vent Elbow Up

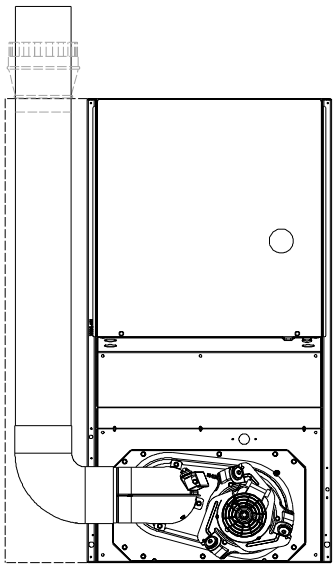

SEE NOTES: 1,2,4,5,6,7,8,9

A02062

Fig. 37—Downflow Application-Vent Elbow Left then Up

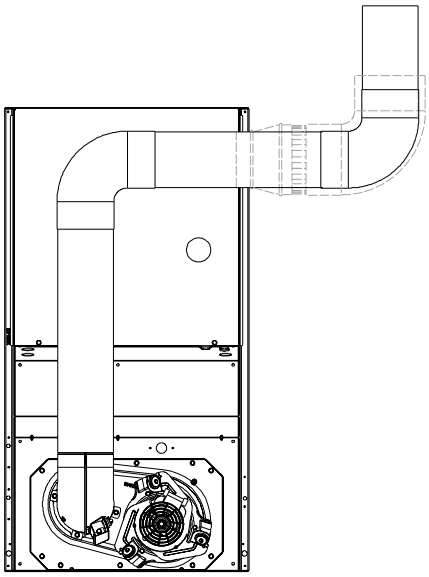

SEE NOTES: 1,2,3,4,5,7,8,9

A02297

→ **Fig. 38—Downflow Application-Vent Elbow Up then Right**

See Venting Notes on page 26.

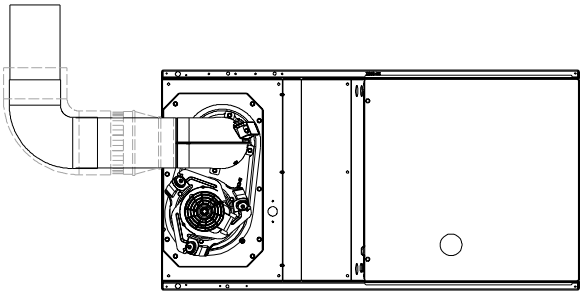

SEE NOTES: 1,2,4,7,8,9

A02064

Fig. 39—Horizontal Left Application-Vent Elbow Left

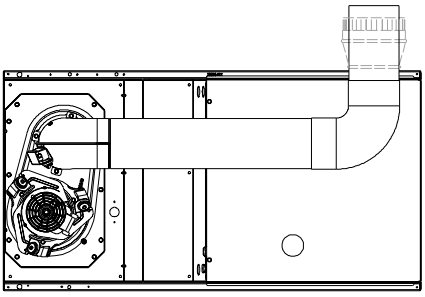

SEE NOTES: 1,2,4,5,7,8,9

A02065

Fig. 40—Horizontal Left Application-Vent Elbow Right then Up

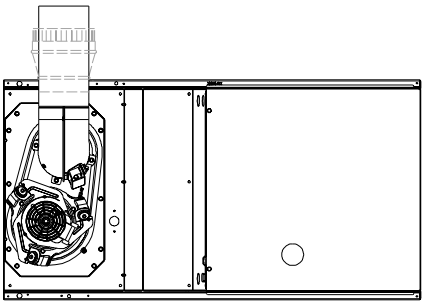

SEE NOTES: 1,2,4,5,7,8,9

A02066

Fig. 41—Horizontal Left Application-Vent Elbow Up

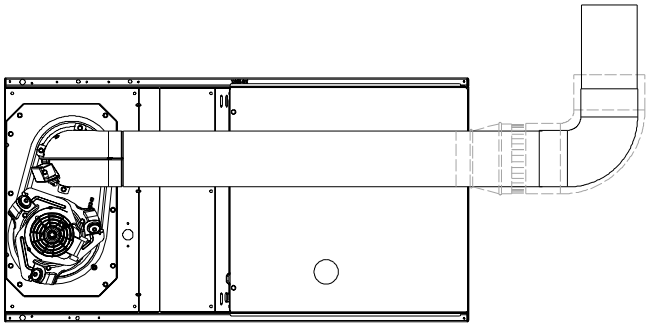

SEE NOTES: 1,2,4,5,7,8,9

A02067

Fig. 42—Horizontal Left Application-Vent Elbow Right

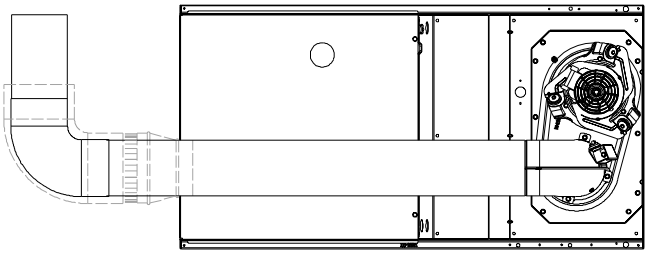

SEE NOTES: 1,2,4,5,7,8,9

A02068

Fig. 43—Horizontal Right Application-Vent Elbow Left

See Venting Notes on Page 26

Furnace use during construction of the building could cause the furnace to be exposed to halogen compounds, causing premature failure of the furnace or venting system due to corrosion.

Vent dampers on any appliance connected to the common vent can cause condensation and corrosion in the venting system. Do not use vent dampers on appliances common vented with this furnace.

ADDITIONAL VENTING REQUIREMENTS

A 4″ round vent elbow is supplied with the furnace. A 5 inch or 6 inch vent connector maybe required for some model furnaces. A field-supplied 4 inch to 5 inch or 4 inch to 6 inch sheet metal increaser fitting is required when 5 inch or 6 inch vent connector is used. See Fig. 33–45 Venting Orientation for approved vent configurations.

NOTE: Vent connector length for connector sizing starts at furnace vent elbow. The 4 inch vent elbow is shipped for upflow configuration and may be rotated for other positions. Remove the 3 screws that secure vent elbow to furnace, rotate furnace vent elbow to position desired, reinstall screws. The factory-supplied vent elbow does NOT count as part of the number of vent connector elbows.

The vent connector can exit the door through one of 5 locations on the door.

1. Attach the single wall vent connector to the furnace vent elbow, and fasten the vent connector to the vent elbow with at least two field-supplied, corrosion-resistant, sheet metal screws located 180° apart.
2. Vent the furnace with the appropriate connector as shown in Fig. 33–45.
3. Orient the door to determine the correct location of the door cutout to be removed.
4. Use aviation-type tin snips to remove the correct U-shaped cut-out on door.

An accessory Vent Guard Kit, KGAVG0101DFG is REQUIRED for downflow applications for use where the vent exits through the lower portion of the furnace casing door. Refer to the Vent Guard Kit Instructions for complete details.

The horizontal portion of the venting system shall maintain a minimum of 1/4-in. upward slope per linear ft and it shall be rigidly supported every 5 ft or less with metal hangers or straps to ensure there is no movement after installation.

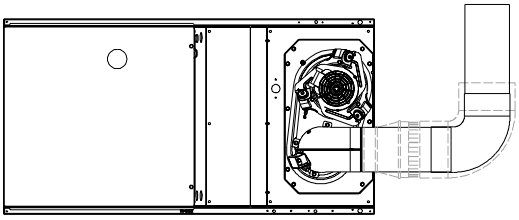

A02069

SEE NOTES: 1,2,4,7,8,9

Fig. 44—Horizontal Right Application-Vent Elbow Right

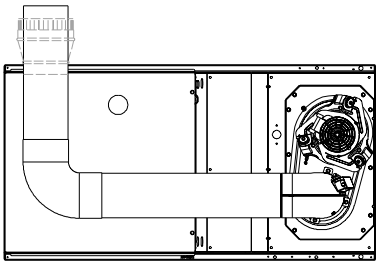

SEE NOTES: 1,2,4,5,7,8,9

A02070

Fig. 45—Horizontal Right Application-Vent Elbow Left then Up

Venting Notes for Fig. 33-45

1. For common vent, vent connector sizing and vent material: United States, latest edition of the National Fuel Gas Code (NFGC), ANSI Z223.1/NFPA 54. In Canada, latest edition of the National Standards of Canada, Natural Gas and Propane Installation Code (NSCNGPIC), CSA B149.1-00.
2. Immediately increase to 5–inch vent connector outside furnace casing when 5-inch vent connector required, refer to Note 1 above.
3. Side outlet vent for upflow and downflow installations must use Type B vent immediately after exiting the furnace, except when KGAVG0101DFG is used in the downflow position.
4. Type B vent where required, refer to Note 1 above.
5. 4” single wall (26 ga. min.) vent must be used inside furnace casing and when the KGAVG0101DFG Downflow Vent Guard Kit is used external to the furnace.
6. Accessory Downflow Vent Guard Kit, KGAVG0101DFG required in downflow installations with bottom vent configuration.
7. Chimney Adapter Kit required for exterior masonry chimney applications. Refer to Chimney Adapter Kit, KGACA02014FC and KGACA02015FC for sizing and complete application details.
8. Secure vent connector to furnace elbow with (2) corrosion-resistant sheet metal screws, spaced approximately 180° apart.
9. Secure all other single wall vent connector joints with (3) corrosion resistant screws spaced approximately 120° apart. Secure Type B vent connectors per vent connector manufacturer’s recommendations.

SIDEWALL VENTING

This furnace is not approved for direct sidewall horizontal venting without the use of an add-on power venter.

In the U.S.: Per the NFGC, any listed power venter may be used, when approved by the authority having jurisdiction.

In Canada: Only power venters approved by the appliance manufacturer and where allowed by the authority having jurisdiction may be used for sidewall venting.

The only approved power venter is the Field Controls SWG-4D and SWG-5D sidewall power venter. Select the power venter to match the Btuh input of the appliance being vented. Follow all manufacturer’s installation requirements for venting and termination included with the power venter.

START-UP, ADJUSTMENT, AND SAFETY CHECK

Step 1—General

⚠ WARNING

This furnace is equipped with manual reset limit switches in the gas control area. The switches open and shut off power to the gas valve if a flame rollout or overheating condition occurs in the gas control area. DO NOT bypass the switches. Correct inadequate combustion air supply problem and reset the switches. Failure to follow this warning can cause fire, explosion, personal injury, or death.

⚠ CAUTION

Personal injury can result form sharp metal edges, etc. Be careful when removing parts. Gloves and safety glasses should be worn when servicing equipment.

1. Maintain 115-v wiring and ground. Improper polarity will result in rapid flashing LED and no furnace operation.
2. Make thermostat wire connections at the 24-v terminal block on the furnace control. Failure to make proper connections will result in improper operation. (See Fig. 24.)
3. Gas supply pressure to the furnace must greater than 4.5-in. wc (0.16 psig) but not exceed 14-in. wc (0.5 psig).
4. Check all manual-reset switches for continuity.
5. Install blower compartment door. Door must be in place to operate furnace.
6. Replace outer door.

Step 2—Start-Up Procedures

⚠ WARNING

Never purge a gas line into a combustion chamber. Never use matches, candles, flame, or other sources of ignition for the purpose of checking leakage. Use a soap-and-water solution to check for leakage. Failure to follow this warning can cause fire, explosion, personal injury, or death.

1. Purge gas lines after all connections have been made.
2. Check gas lines for leaks.

⚠ WARNING

→ Blower access door switch opens 115-v power to control. No component operation can occur unless switch is closed. Caution must be taken when manually closing this switch for service purposes. Failure to follow this warning could result in electrical shock, personal injury, or death.

3. To Begin Component Self-Test: Disconnect the thermostat R lead from the furnace control board. Manually close the blower door switch closed. Briefly short the TEST/TWIN terminal to the COM 24V terminal. Status LED will flash code and then turn ON the inducer motor until the end of the test. The hot surface ignitor, blower motor FAN speed, blower motor HEAT speed and blower motor COOL speed will be turned ON for 10-15 seconds each. Gas valve and humidifier will not be turned on. (See Fig. 23.)

NOTE: The furnace control allows all components, except the gas valve, to be run for short period of time. This feature helps

diagnose a system problem in case of a component failure. Component test feature will not operate if any thermostat signal is present at the control.

→ Component test sequence is as follows:
Refer to service label attached to furnace or see Fig. 50.

a. LED will display previous status code 4 times.
b. Inducer motor starts and continues to run until Step f of component test sequence.
c. Hot surface ignitor is energized for 15 sec., then off.
d. Blower motor operates on HEAT speed for 10 sec.
e. Blower motor operates on COOL speed for 10 sec.
f. Inducer motor stops.
g. Reconnect R lead to furnace control board, release blower door switch and re-install blower door.

4. Operate furnace per instruction on door.
5. Verify furnace shut down by lowering thermostat setting below room temperature.
6. Verify furnace restarts by raising thermostat setting above room temperature.

Step 3—Adjustments

⚠ CAUTION

DO NOT bottom out gas valve regulator adjusting screw. This can result in unregulated manifold pressure and result in excess overfire and heat exchanger failures.

⚠ CAUTION

DO NOT redrill orifices. Improper drilling (burrs, out-of-round holes, etc.) can cause excessive burner noise and misdirection of burner flames. This can result in flame impingement of heat exchangers, causing failures. (See Fig. 48.)

Furnace gas input rate on rating plate is for installations at altitudes up to 2000 ft. Furnace input rate must be within ±2 percent of furnace rating plate input.

In the U.S.A., the input rating for altitudes above 2,000 ft. must be reduced by 4 percent for each 1,000 ft. above sea level. In Canada, input rating must be reduced by 10 percent for altitudes of 2,000 ft. to 4,500 ft. above sea level.

Table 6–Altitude Derate Multipler for U.S.A.

ALTITUDE (FT)	PERCENT OF DERATE	DERATE MULTIPLIER FACTOR*
0–2000	0	1.00
2001–3000	8–12	0.90
3001–4000	12–16	0.86
4001–5000	16–20	0.82
5001–6000	20–24	0.78
6001–7000	24–28	0.74
7001–8000	28–32	0.70
8001–9000	32–36	0.66
9001–10,000	36–40	0.62

* Derate multiplier factors are based on midpoint altitude for altitude range.

1. Determine the correct gas input rate.
   In the U.S.:
   For installations below 2000 ft, refer to the unit rating plate. For installations above 2000 ft, multiply the input on the rating plate by the de-rate multiplier in Table 6 for the correct input rate.

In Canada:
At installation altitudes from 2000 to 4500 ft, this furnace must be derated 10 percent by an authorized Gas Conversion Station or Dealer. To determine correct input rate for altitude, see example 1 and use 0.90 as derate multiplier factor.

2. Determine the correct orifice and manifold pressure adjustment. There are two different orifice and manifold adjustment tables.All models in all positions, except Low NOx models in downflow or horizontal positions, use Table 10 (22,000 Btuh/Burner).
   Low NOx models in the downflow or horizontal positions must use Table 11 (21,000 Btuh/Burner). See input listed on rating plate.
   a. Obtain average yearly gas heat value (at installed altitude) from local gas supplier.
   b. Obtain average yearly gas specific gravity from local gas supplier.
   c. Find installation altitude in Table 10 or 11.
   d. Find closest natural gas heat value and specific gravity in Table 10 or 11.

Caution!! For the following applications, use the minimum vertical vent heights as specified below. For all other applications, follow exclusively the National Fuel Gas Code.

FURNACE ORIENTATION	VENT ORIENTATION	FURNACE INPUT(BTU/HR)	MINIMUM VENT DIAMETER (IN.)*	MINIMUM VERTICAL VENT HEIGHT (FT)**
Downflow	Vent elbow left, then up Fig. 37	154,000 132,000 110,000(036/-12 only)	5	12
Horizontal Left	Vent elbow right, then up Fig. 40	154,000 132,000	5	7
Horizontal Left	Vent Elbow up Fig. 41	154,000 132,000	5	7
Horizontal Left	Vent elbow right Fig. 42	154,000	5	7
Downflow	Vent elbow up then left Fig. 35	110,000 (036/-12 only)	5	10
Downflow	Vent elbow up, then right Fig. 38	110,000 (036/-12 only)	5	10

NOTE: All vent configurations must also meet National Fuel Gas Code venting requirements NFGC
*4 in. inside casing or vent guard
**Including 4 in. vent section(s)

EXAMPLE 1:

88,000 BTUH INPUT FURNACE INSTALLED AT 4300 FT.

		Derate		Furnace Input Rate
Furnace Input Rate	X	Multiplier	=	at Installation
at Sea Level		Factor		Altitude
88,000	X	0.90	=	79,200

e. Follow heat value and specific gravity lines to point of intersection to find orifice size and manifold pressure settings for proper operation.

f. Check and verify burner orifice size in furnace. NEVER ASSUME ORIFICE SIZE. ALWAYS CHECK AND VERIFY.

g. Replace orifice with correct size if required by Table 10 or 11. Use only factory-supplied orifices. See EXAMPLE 2. 22,000 BTUH/Burner application use Table 10.

EXAMPLE 2: (0–2000 ft altitude)
Heating value = 1000 Btu/cu ft
Specific gravity = 0.62
Therefore: Orifice No. 43*
→ Manifold pressure: 3.7-in. wc
* Furnace is shipped with No. 43 orifices. In this example all main burner orifices are the correct size and do not need to be changed to obtain proper input rate.

3. Adjust manifold pressure to obtain correct input rate.

a. Turn gas valve ON/OFF switch to OFF

b. Remove manifold pressure tap plug from gas valve. (See Fig. 47.)

c. Connect a water column manometer or similar device to manifold pressure tap.

d. Manually close blower door switch

e. Set thermostat to call for heat.

f. Jumper R and W thermostat connections on furnace control board to start furnace.

g. Remove regulator seal cap and turn regulator adjusting screw counterclockwise (out) to decrease input rate of clockwise (in) to increase input rate.

h. Install regulator seal cap.

i. Leave manometer or similar device connected and proceed to Step 4.

NOTE: DO NOT set manifold pressure less than 3.2-in wc or more than 3.8-in. wc for natural gas at sea level. If manifold pressure is outside this range, change main burner orifices or refer Table 10 or 11.

NOTE: If orifice hole appears damaged or it is suspected to have been redrilled, check orifice hole with a numbered drill bit of correct size. Never redrill an orifice. A burr-free and squarely aligned orifice hole is essential for proper flame characteristics.

4. Verify natural gas input rate by clocking meter.

NOTE: Gas valve regulator adjustment cap must be in place for proper input to be clocked.

a. Turn off all other gas appliances and pilots.

b. Run furnace for 3 minutes in heating operation.

c. Measure time (in sec) for gas meter to complete 1 revolution and note reading. The 2 cubic feet dial provides a more accurate measurement of gas flow.

d. Refer to Table 8 for cubic ft of gas per hr.

e. Multiply gas rate (cu ft/hr) by heating value (Btu/cu ft) to obtain input.

If clocked rate does not match required input from Step 1, increase manifold pressure to increase input or decrease manifold pressure to decrease input. Repeat steps b through e until correct input is achieved. Reinstall regulator seal cap on gas valve.

5. Set temperature rise.
The furnace must operate within the temperature rise ranges specified on the furnace rating plate. Do not exceed temperature rise range specified on unit rating plate. Determine the temperature rise as follows:

a. Place thermometers in return and supply ducts as close to furnace as possible. Be sure thermometers do not see radiant heat from heat exchangers. Radiant heat affects temperature rise readings. This practice is particularly important with straight-run ducts.

b. When thermometer readings stabilize, subtract return-air temperature from supply-air temperature to determine air temperature rise.

NOTE: Blower access door must be installed for proper temperature rise measurement.

NOTE: If the temperature rise is outside this range, first check:
1.) Gas input for heating operation.
2.) Derate for altitude if applicable.
3.) Return and supply ducts for excessive restrictions causing static pressures greater than 0.50-in. wc.
4.)Dirty filter.

⚠ WARNING

Disconnect 115-v electrical power before changing speed tap. Failure to follow this warning could result in personal injury.

c. Adjust air temperature rise by adjusting blower speed. Increase blower speed to reduce temperature rise. Decrease blower speed to increase temperature rise.

d. Turn thermostat down below room temperature and remove blower access door.

Table 7—Speed Selection

COLOR	SPEED	AS SHIPPED
White	Common	BLW
Black	High	COOL
Yellow†	Med-High	SPARE
Blue	Med-Low	HEAT
Red	Low*	SPARE

* Continuous-blower speed-as shipped default
† Not available on 1/5 HP motors.

e. To change motor speed selection for heating, remove blower motor lead from control HEAT terminal (See Fig. 46.) Select desired blower motor speed lead from one of the other terminals and relocate it to the HEAT terminal (See Table 7 for lead color identification). Reconnect original lead to SPARE terminal.

f. Repeat steps a through e.

g. When correct input rate and temperature rise is achieved, turn gas valve ON/OFF switch to OFF.

h. Remove manometer or similar device from gas valve.

i. Reinstall manifold pressure tap plug in gas valve.

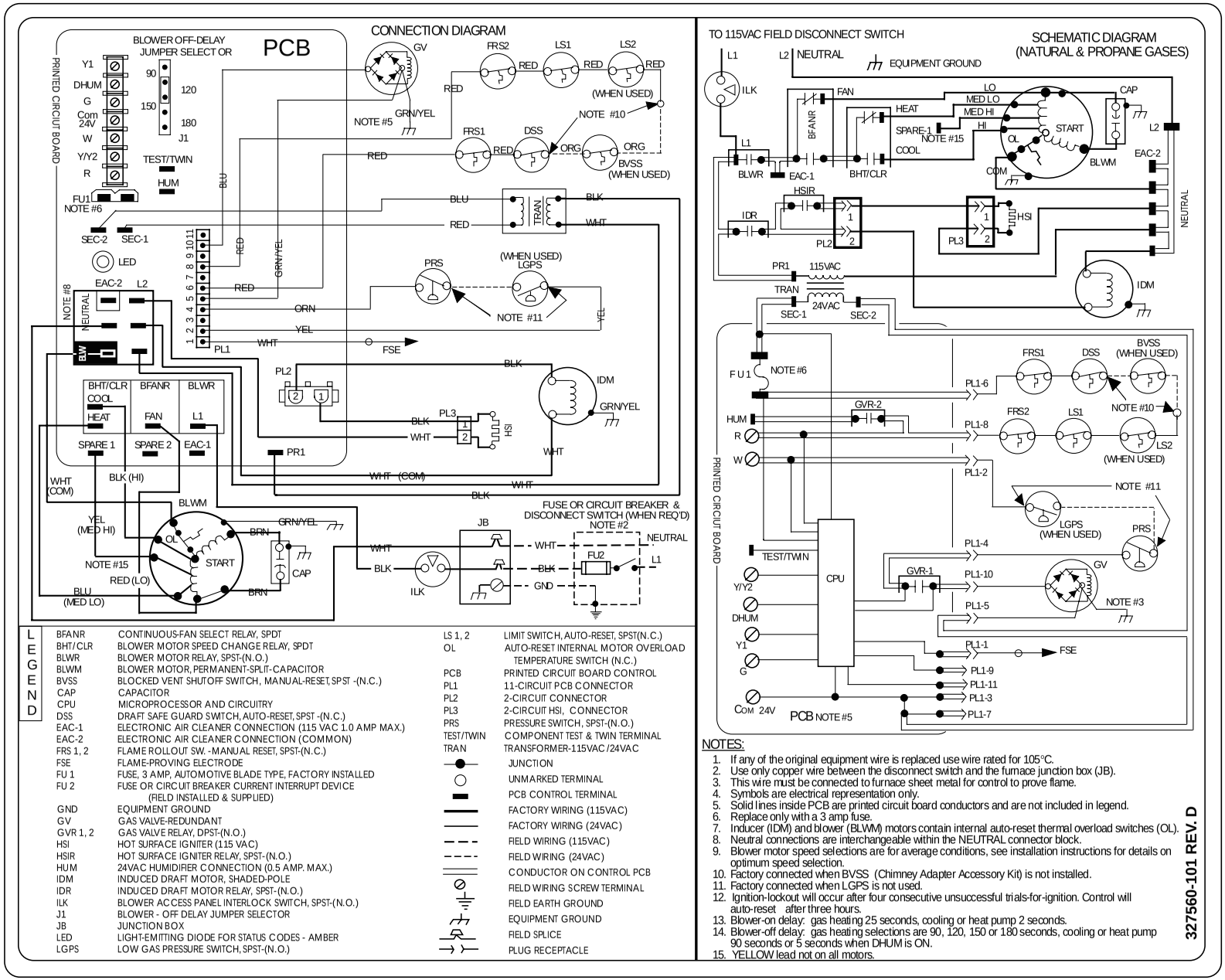

Fig. 46—Wiring Diagram

A02140

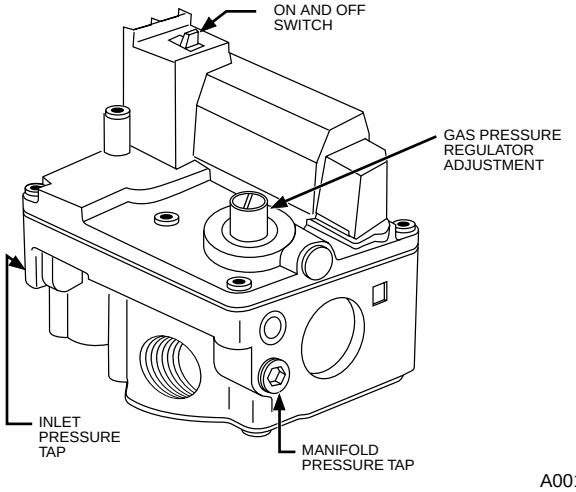

Fig. 47—Redundant Automatic Gas Control Valve

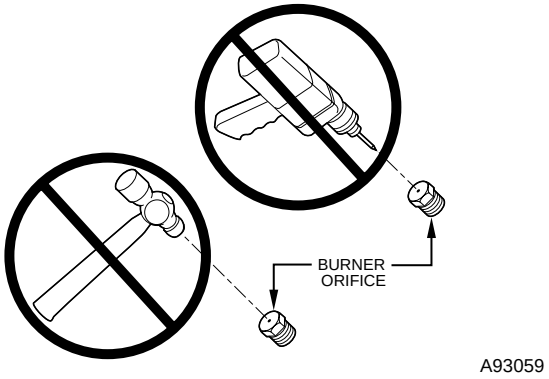

Fig. 48—Orifice Hole

⚠ WARNING

Failure to reinstall manifold pressure tap plug in gas valve will result in fire, explosion, personal injury, property damage or death.

j. Reinstall blower access door if removed.

k. Turn gas valve ON/OFF switch to ON.

⚠ CAUTION

Recheck temperature rise. It must be within limits specified on the rating plate. Recommended operation is at the mid-point of rise range or slightly above

6. Set thermostat heat anticipator.

   a. Mechanical thermostat—Set thermostat heat anticipator to match the amp draw of the electrical components in the R-W circuit. Accurate amp draw readings can be obtained at the wires normally connected to thermostat subbase terminals, R and W. The thermostat anticipator should NOT be in the circuit while measuring current.

      (1.) Remove thermostat from subbase or from wall.

      (2.) Connect an amp meter as shown in Fig. 49 across the R and W terminals or R and W wires.

      (3.) Record amp draw across terminals when furnace is in heating and after blower starts.

      (4.) Set heat anticipator on thermostat per thermostat instructions and install on subbase or wall.

   b. Electronic thermostat: Set cycle rate for 4 cycles per hr.

TABLE 8–GAS RATE (CU FT/HR)

SECONDS FOR 1 REVOLUTION	SIZE OF TEST DIAL			SECONDS FOR 1 REVOLUTION	SIZE OF TEST DIAL		
	1 Cu Ft	2 Cu Ft	5 Cu Ft		1 Cu Ft	2 Cu Ft	5 Cu Ft
10	360	720	1800	50	72	144	360
11	327	655	1636	51	71	141	355
12	300	600	1500	52	69	138	346
13	277	555	1385	53	68	136	340
14	257	514	1286	54	67	133	333
15	240	480	1200	55	65	131	327
16	225	450	1125	56	64	129	321
17	212	424	1059	57	63	126	316
18	200	400	1000	58	62	124	310
19	189	379	947	59	61	122	305
20	180	360	900	60	60	120	300
21	171	343	857	62	58	116	290
22	164	327	818	64	56	112	281
23	157	313	783	66	54	109	273
24	150	300	750	68	53	106	265
25	144	288	720	70	51	103	257
26	138	277	692	72	50	100	250
27	133	267	667	74	48	97	243
28	129	257	643	76	47	95	237
29	124	248	621	78	46	92	231
30	120	240	600	80	45	90	225
31	116	232	581	82	44	88	220
32	113	225	563	84	43	86	214
33	109	218	545	86	42	84	209
34	106	212	529	88	41	82	205
35	103	206	514	90	40	80	200
36	100	200	500	92	39	78	196
37	97	195	486	94	38	76	192
38	95	189	474	96	38	75	188
39	92	185	462	98	37	74	184
40	90	180	450	100	36	72	180
41	88	176	439	102	35	71	178
42	86	172	429	104	35	69	173
43	84	167	419	106	34	68	170
44	82	164	409	108	33	67	167
45	80	160	400	110	33	65	164
46	78	157	391	112	32	64	161
47	76	153	383	116	31	62	155
48	75	150	375	120	30	60	150
49	73	147	367				

7. Adjust blower off delay
   The blower off delay has 4 adjustable settings from 90 sec to 180 sec. The blower off delay jumpers are located on the furnace control board. (See Fig. 23.)
   To change the blower off delay setting, move the jumper from one set of pins on the control to the pins used for the selected blower off delay. Factory off delay setting is 120 sec.

Step 4—Check Safety Controls

The flame sensor, gas valve, and pressure switch were all checked in the Start-up procedure section as part of normal operation.

1. Check Main Limit Switches
   This control shuts off combustion control system and energizes air-circulating blower motor, if furnace overheats. By using this method to check limit control, it can be established that limit is functioning properly and will operate if there is a restricted duct system or motor failure. If limit control does not function during this test, cause must be determined and corrected.

   a. Run furnace for at least 5 minutes.

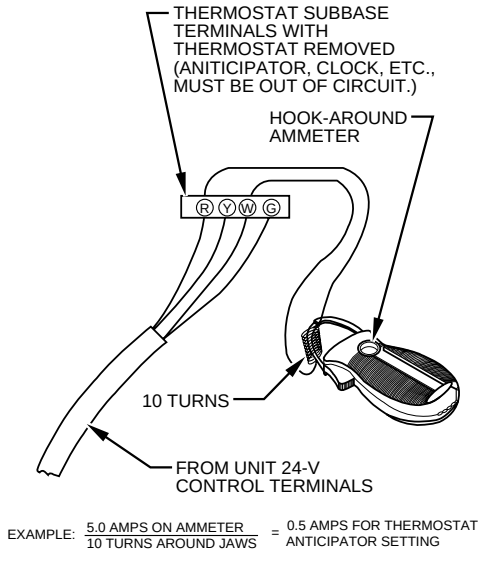

Fig. 49—Amp Draw Check With Ammeter

Table 9—FILTER SIZE INFORMATION (IN.)

FURNACE CASING WIDTH	FILTER SIZE		FILTER TYPE
	Side Return	Bottom Return	
14-1/2	16 X 25 X 1	14 X 25 X 1	Cleanable*
17-1/2	16 X 25 X 1	16 X 25 X 1	Cleanable*
21	16 X 25 X 1	20 X 25 X 1	Cleanable*
24	16 X 25 X 1	24 X 25 X 1	Cleanable*

* Recommended

b. Gradually block off return air with a piece of cardboard or sheet metal until the limit trips.

c. Unblock return air to permit normal circulation.

d. Burners will re-light when furnace cools down.

2. Check draft safeguard switch.
The purpose of this control is to permit the safe shutdown of the furnace during certain blocked vent conditions.

a. Verify vent pipe is cool to the touch.

b. Disconnect power to furnace and remove vent connector from furnace vent elbow.

c. Restore power to furnace and set room thermostat above room temperature.

d. After normal start-up, allow furnace to operate for 2 minutes, then block vent elbow in furnace 80 percent of vent area with a piece of flat sheet metal.

e. Furnace should cycle off within 2 minutes.

f. Remove blockage and reconnect vent pipe to furnace vent elbow.

g. Switch will auto-reset when it cools.

h. Control board should lock out furnace, cycle 115 vac power to reset control.

3. Check Pressure Switch(es)
This control proves operation of the draft inducer blower.

a. Turn off 115-v power to furnace.

b. Disconnect inducer motor lead wires from wire harness.

c. Turn on 115-v power to furnace.

d. Set thermostat to ″call for heat″ and wait 1 minute. When pressure switch is functioning properly, hot surface ignitor should NOT glow and control diagnostic light flashes a status code 32. If hot surface ignitor glows when inducer motor is disconnected, shut down furnace immediately.

e. Determine reason pressure switch did not function properly and correct condition.

f. Turn off 115-v power to furnace.

g. Reconnect inducer motor wires, replace outer door, and turn on 115-v power.

Step 5—Checklist

1. Put away tools and instruments. Clean up debris.
2. Check that blower OFF-DELAY time is selected as desired.
3. Verify that blower and burner access doors are properly installed.
4. Cycle test furnace with room thermostat.
5. Check operation of accessories per manufacturer's instructions.
6. Review User's Guide with owner.
7. Locate literature packet near furnace.

SERVICE AND MAINTENANCE PROCEDURES

⚠ WARNING

The ability to properly perform maintenance on this equipment requires certain knowledge, mechanical skills, tools, and equipment. If you do not possess these, do not attempt to perform any maintenance on this equipment other than those procedures recommended in the User's Manual. FAILURE TO FOLLOW THIS WARNING COULD RESULT IN POSSIBLE DAMAGE TO THIS EQUIPMENT, SERIOUS PERSONAL INJURY, OR DEATH.

⚠ WARNING

→ ELECTRICAL SHOCK, FIRE, OR EXPLOSION HAZARD
Failure to follow safety warnings exactly could result in dangerous operation, serious injury, death, or property damage.
Improper servicing could result in dangerous operation, serious injury, death, or property damage.
- Before servicing, disconnect all electrical power to furnace.
- When servicing controls, label all wires prior to disconnecting. Reconnect wires correctly.
- Verify proper operation after servicing.

⚠ CAUTION

Label all wires prior to disconnection when servicing controls. Wiring errors can cause improper and dangerous operation.

Step 1—Introduction

GENERAL

These instructions are written as if the furnace is installed in an upflow application. An upflow furnace application is where the blower is located below the combustion and controls section of the furnace, and conditioned air is discharged upward. Since this furnace can be installed in any of the 4 positions shown in Fig. 4, you must revise your orientation to component location accordingly.

SERVICE

If status code recall is needed, briefly remove then reconnect one main limit wire to display stored status code. On RED LED boards do not remove power or blower door before initiating status code recall. After status code recall is completed component test will occur.

LED CODE **STATUS**

CONTINUOUS OFF - Check for 115VAC at L1 and L2, and 24VAC at SEC-1 and SEC-2.
CONTINUOUS ON - Control has 24VAC power.
RAPID FLASHING - Line voltage (115VAC) polarity reversed. If twinned, refer to twinning kit instructions.

EACH OF THE FOLLOWING STATUS CODES IS A TWO DIGIT NUMBER WITH THE FIRST DIGIT DETERMINED BY THE NUMBER OF SHORT FLASHES AND THE SECOND DIGIT BY THE NUMBER OF LONG FLASHES.

11 NO PREVIOUS CODE - Stored status code is erased automatically after 72 hours. On RED LED boards stored status codes can also be erased when power (115 VAC or 24 VAC) to control is interrupted.
12 BLOWER ON AFTER POWER UP (115 VAC or 24 VAC) -Blower runs for 90 seconds, if unit is powered up during a call for heat (R-W closed) or R-W opens during blower on-delay.
13 LIMIT CIRCUIT LOCKOUT - Lockout occurs if the limit, draft safeguard, flame rollout, or blocked vent switch (if used) is open longer than 3 minutes or 10 successive limit trips occurred during high-heat. - Control will auto reset after three hours. - Refer to #33.
14 IGNITION LOCKOUT - Control will auto-reset after three hours. Refer to #34.
21 GAS HEATING LOCKOUT - Control will NOT auto reset.
Check for: - Mis-wired gas valve -Defective control (valve relay)
22 ABNORMAL FLAME-PROVING SIGNAL - Flame is proved while gas valve is de-energized. Inducer will run until fault is cleared. Check for: - Leaky gas valve
- Stuck-open gas valve
23 PRESSURE SWITCH DID NOT OPEN Check for:
- Obstructed pressure tubing. - Pressure switch stuck closed.
24 SECONDARY VOLTAGE FUSE IS OPEN Check for:
- Short circuit in secondary voltage (24VAC) wiring.

COMPONENT TEST

To initiate the component test sequence, shut OFF the room thermostat or disconnect the "R" thermostat lead. Briefly short the TEST/TWIN terminal to the "Com 24V" terminal. Status LED will flash code and then turn ON the inducer motor. The inducer motor will run for the entire component test. The hot surface ignitor, blower motor fan speed (on AMBER LED boards only) blower motor-heat speed, and blower motor-cool speed will be turned ON for 10-15 seconds each. Gas Valve and Humidifier will not be turned on.

327596-101 REV. A

31 PRESSURE SWITCH DID NOT CLOSE OR REOPENED - If open longer than five minutes, inducer shuts off for 15 minutes before retry. Check for: - Excessive wind
- Proper vent sizing - Defective inducer motor
- Low inducer voltage (115VAC) - Defective pressure switch
- Inadequate combustion air supply - Disconnected or obstructed pressure tubing
- Low inlet gas pressure (if LGPS used) - Restricted vent
If it opens during blower on-delay period, blower will come on for the selected blower off-delay.
33 LIMIT CIRCUIT FAULT - Indicates the limit, draft safeguard, flame rollout, or blocked vent switch (if used) is open or the furnace is operating in high-heat only mode due to 2 successive low heat limit trips. Blower will run for 4 minutes or until open switch remakes whichever is longer. If open longer than 3 minutes, code changes to lockout #13.
If open less than 3 minutes status code #33 continues to flash until blower shuts off.
Flame rollout switch and BVSS require manual reset. Check for: - Restricted vent
- Proper vent sizing - Loose blower wheel. - Excessive wind
- Dirty filter or restricted duct system.
- Defective blower motor or capacitor. - Defective switch or connections.
- Inadequate combustion air supply (Flame Roll-out Switch open).
34 IGNITION PROVING FAILURE - Control will try three more times before lockout #14 occurs. If flame signal lost during blower on-delay period, blower will come on for the selected blower off-delay. Check for: - Flame sensor must not be grounded
- Oxide buildup on flame sensor (clean with fine steel wool).
- Proper flame sense microamps (.5 microamps D.C. min., 4.0 - 6.0 nominal).
- Gas valve defective or gas valve turned off - Manual valve shut-off
- Defective Hot Surface Ignitor - Control ground continuity
- Low inlet gas pressure - Inadequate flame carryover or rough ignition
- Green/Yellow wire **MUST** be connected to furnace sheet metal
45 CONTROL CIRCUITRY LOCKOUT Auto-reset after one hour lockout due to;
- Gas valve relay stuck open - Flame sense circuit failure - Software check error
Reset power to clear lockout. Replace control if status code repeats.

A02027

Fig. 50—Service Label

ELECTRICAL CONTROLS AND WIRING

⚠ CAUTION

There may be more than 1 electrical supply to the unit. Check accessories and cooling unit for additional electrical supplies

The electrical ground and polarity for 115-v wiring must be properly maintained. Refer to Fig. 24 for field wiring information and to Fig. 46 for furnace wiring information.

NOTE: If the polarity is not correct, the STATUS LED on the control will flash rapidly and prevent the furnace from heating. The control system also requires an earth ground for proper operation of the control and flame-sensing electrode.

The 24-v circuit contains an automotive-type, 3-amp fuse located on the control. (See Fig. 23.) Any shorts of the 24-v wiring during installation, service, or maintenance will cause this fuse to blow. If fuse replacement is required, use ONLY a 3-amp fuse. The control LED will display status code 24 when fuse needs to be replaced.

Proper instrumentation is required to service electrical controls. The control in this furnace is equipped with a Status Code LED (Light-Emitting Diode) to aid in installation, servicing, and troubleshooting. It can be viewed through the sight glass in blower access door. The furnace control LED is either ON continuously, rapid flashing, or a code composed of 2 digits. The first digit is the number of short flashes, the second digit is the number of long flashes.

For an explanation of status codes, refer to service label located on blower access door or Fig. 50 and the troubleshooting guide at the end of this procedure.

For Controls With an Amber LED the stored status codes will not be erased from the control memory even if 115- or 24-v power is interrupted.

1. To retrieve status codes, proceed with the following:

NOTE: NO thermostat signal may be present at control, and all blower-OFF delays must be completed.

a. Leave 115-v power to furnace turned on.

b. Remove outer access door.

c. Look into blower access door sight glass for current LED status. Removing blower access door will open blower access door switch and terminate 115-v power to control so that status code is not displayed.

d. BRIEFLY remove insulated terminal wire from the draft safeguard (DSS) switch until LED goes out, then reconnect it.

NOTE: If wire to LS or DSS is disconnected longer than 4 sec, main blower starts, and retrieval request is ignored.

2. When above items have been completed, the LED flashes status code 4 times. Record this status code for further troubleshooting.
3. Component self-test will begin. Refer to COMPONENT TEST section for complete test sequence.
4. Check LED status.
5. Refer to the SERVICE label on the front of the blower access door for more information.

Component Self-Test

Component Test can also be initiated by performing the following:

1. Remove outer access door.
2. Remove blower access door.
3. Remove the wire from the ″R″ terminal of the control board.
4. Manually close blower access door switch.

⚠ WARNING

Failure to follow this warning could result in electrical shock, personal injury, or death. Blower access door switch opens 115-v power to control. No component operation can occur unless switch is closed. Caution must be taken when manually closing this switch for service purposes.

5. BRIEFLY short (jumper) TEST/TWIN, 3/16-in. quick-connect male terminal on control (behind Y/Y2 terminal) to the COM-24V terminal on furnace control. (See Fig. 23.)

NOTE: If TEST/TWIN to COM-24V terminals are jumpered longer than 2 sec, LED will flash rapidly, and test request will be ignored.

6. Component Test will function as follows:
   a. LED flashes a status code 4 times. Record this status code for further troubleshooting.
   b. Inducer motor starts and continues to run until step g of component test sequence.
   c. Hot surface ignitor is energized for 15 sec, then de-energized.
   d. Blower operates at FAN speed for 10 sec, then turns off.
   e. Blower operates at HEAT speed for 10 sec, then turns off.
   f. Blower operates at COOL speed for 10 sec, then turns off.
   g. Inducer motor turns off.

Items a through g above will assist in furnace troubleshooting since all components are functionally operated except the gas valve. This procedure is also referred to as ″Component Test Sequence.″

7. Check LED status. If no previous faults in history, control will flash status code 11.
8. If LED status indicates proper operation, RELEASE BLOWER ACCESS DOOR SWITCH, reattach wire to ″R″ terminal on furnace control board, replace blower access door, and replace burner access door.

Step 2—Care and Maintenance

⚠ WARNING

Never store anything on, near, or in contact with the furnace, such as:
1. Spray or aerosol cans, rags, brooms, dust mops, vacuum cleaners, or other cleaning tools.
2. Soap powders, bleaches, waxes or other cleaning compounds, plastic or plastic containers, gasoline, kerosene, cigarette lighter fluid, dry cleaning fluids, or other volatile fluids.
3. Paint thinners and other painting compounds, paper bags, or other paper products.

A failure to follow this warning could result in corrosion of the heat exchanger, fire, personal injury, or death.

For continuing high performance and to minimize possible equipment failure, periodic maintenance must be performed on this equipment. Consult your local dealer about proper frequency of maintenance and the availability of a maintenance contract.

⚠ WARNING

Turn off the gas and electrical supplies to the unit before performing any maintenance or service. Follow the operating instructions on the label attached to the furnace. A failure to follow this warning could result in personal injury.

⚠ WARNING

Never operate unit without a filter or with filter access door removed. A failure to follow this warning could result in fire, personal injury, or death.

⚠ CAUTION

Personal injury can result from sharp metal edges, etc. Be careful when removing parts. Gloves and safety glasses should be worn when servicing equipment

The minimum maintenance on this equipment is as follows:

1. Check and clean air filter each month or more frequently if required. Replace if torn.
2. Check blower motor and wheel for cleanliness each heating and cooling season. Clean as necessary.
3. Check electrical connections for tightness and controls for proper operation each heating season. Service as necessary.
4. Inspect burner compartment before each heating season for rust, corrosion, soot or excessive dust. If necessary, have furnace and burner serviced by a qualified professional.
5. Inspect the vent pipe/vent system before each heating season for rust, corrosion, water leakage, sagging pipes or broken fittings. Have vent pipes/vent system serviced by a qualified professional.
6. Inspect any accessories attached to the furnace such as a humidifier or electronic air cleaner. Perform any service or maintenance to the accessories as recommended in the accessory instructions.

CLEANING AND/OR REPLACING AIR FILTER

The air filter arrangement may vary depending on the application. The filter is exterior to the furnace casing.

NOTE: If the filter has an airflow direction arrow, the arrow must point towards the blower.

⚠ CAUTION

Personal injury can result from sharp metal edges, etc. Be careful when removing parts. Gloves and safety glasses should be worn when servicing equipment

Media cabinet filter procedures :

NOTE: Media cabinet is included with single-stage deluxe furnace.

1. Turn off electrical supply to furnace before removing filter access door.
2. Remove filter cabinet door.
3. Slide filter out of cabinet.
4. If equipped with permanent, washable 1″ filter, clean filter by spraying cold tap water through filter in opposite direction of airflow. Rinse filter and let dry. Oiling or coating of the filter is not recommended. See Table 9 for size information.
5. If equipped with factory-specified disposable media filter, replace only with media filter having the same part number and size. For expandable replacement media, refer to the instructions included with the replacement media. If equipped with accessory KGAFR0301ALL external filter rack, See Table 9.
6. Slide filter into cabinet.
7. Replace filter cabinet door.
8. Turn on electrical supply to furnace.

BLOWER MOTOR AND WHEEL

⚠ WARNING

→ Blower access door switch opens 115-v power to control. No component operation can occur unless switch is closed. Caution must be taken when manually closing this switch for service purposes. Failure to follow this warning could result in personal injury or death.

⚠ CAUTION

The blower wheel should not be dropped or bent as balance will be affected.

The following steps should be performed by a qualified service technician.

To ensure long life and high efficiency, clean accumulated dirt and grease from blower wheel and motor annually.

The inducer and blower motors are pre-lubricated and require no additional lubrication. These motors can be identified by the absence of oil ports on each end of the motor.

Clean blower motor and wheel as follows:

1. Turn off electrical supply to furnace.
2. Loosen the thumbscrew on outer door and remove outer door.
3. For downflow or horizontal furnaces having vent pipes within the furnace that pass in from of the blower access door:
   a. Disconnect vent connector from furnace vent elbow.
   b. Disconnect and remove short piece of vent pipe from within furnace.
4. Remove 2 screws from blower access door and remove blower access door.
5. Disconnect blower leads from furnace control. Note wire color and location for reassembly. All other factory wires can be left connected, but field thermostat connections may need to be disconnected depending on their length and routing.
6. Remove 2 screws from control box to blower shelf.
7. Hang control box from front of furnace casing and away from blower compartment.
8. Remove 2 screws holding blower assembly to blower deck and slide blower assembly out of furnace.
9. Clean blower wheel and motor using a vacuum with soft brush attachment. Blower wheel blades may be cleaned with a small paint or flux brush. Do not remove or disturb balance weights (clips) on blower wheel blades.
10. Vacuum any loose dust from blower housing, wheel and motor.
11. If a greasy residue is present on blower wheel, remove wheel from the blower housing and wash it with an appropriate degreaser. To remove wheel:

→ **NOTE:** Before disassembly, mark blower motor, and blower housing so motor and each arm is positioned at the same location during reassembly.

   a. Disconnect capacitor wires and ground wire attached to blower housing.
   b. Remove screws securing cutoff plate and remove cutoff plate from housing.
   c. Loosen set screw holding blower wheel on motor shaft.
   d. Remove bolts holding motor to blower housing and slide motor out of wheel.
   e. Remove blower wheel from housing.
   f. Clean wheel and housing.
12. Reassemble motor and blower by reversing steps 11f through 11a, finishing with 11a. Be sure to reattach ground wire to the blower housing.
13. Verify that blower wheel is centered in blower housing and set screw contacts the flat portion of the motor shaft. Loosen set screw on blower wheel and reposition if necessary.
14. Spin the blower wheel by hand to verify that the wheel does not rub on the housing.
15. Reinstall blower assembly in furnace.
16. Reinstall control box assembly in furnace.

⚠ CAUTION

Heating fan speed(s) MUST be adjusted to provide proper air temperature rise as specified on the rating plate. Failure to adjust the heating speed(s) may shorten heat exchanger life. Recommended operation is at the midpoint of the rise range or slightly above. Refer to ″SET TEMPERATURE RISE″ under START-UP, ADJUSTMENT, and SAFETY CHECK.

NOTE: Refer to Table 7 for motor speed lead relocation if leads were not identified before disconnection.

17. Reconnect blower leads to furnace control. Refer to furnace wiring diagram, and connect thermostat leads if previously disconnected. (See Fig. 27.)
18. To check blower for proper rotation:
   a. Turn on electrical supply.

⚠ WARNING

Blower access door switch opens 115-v power to furnace control. No component operation can occur. Caution must be taken when manually closing this switch for service purposes. Failure to follow this warning could result in electrical shock, personal injury, or death.

   b. Manually close blower access door switch.

NOTE: If thermostat terminals are jumpered at the time blower access door switch is closed, blower will run for 90 sec before beginning a heating or cooling cycle.

   c. Perform component self-test as shown at the bottom of the SERVICE label, located on the front of blower access door.
   d. Verify blower is rotating in the correct direction
19. If furnace is operating properly, RELEASE BLOWER ACCESS DOOR SWITCH. Replace blower access door and remove any jumpers or reconnect any disconnected thermostat leads.
20. Downflow or horizontal furnaces with vent pipe through furnace only:
   a. Install and connect short piece of vent pipe inside furnace to existing vent.
   b. Connect vent connector to vent elbow.
21. Reinstall casing door.
22. Turn on gas supply and cycle furnace through one complete heating and cooling cycle. Verify the unit temperature rise as shown in “Adjustments” Section. Adjust temperature rise as shown in “Adjustments” Section. If outdoor temperature is below 70°F, turn off circuit breaker to outdoor unit before running furnace in the cooling cycle. Turn outdoor circuit breaker on after completing cooling cycle.

CLEANING HEAT EXCHANGER

The following steps should be performed by a qualified service technician:

NOTE: If the heat exchangers get a heavy accumulation of soot and carbon, they should be replaced rather than trying to clean them thoroughly. A heavy build-up of soot and carbon indicates that a problem exists which needs to be corrected, such as improper adjustment of manifold pressure, insufficient or poor quality combustion air, incorrect size or damaged manifold orifice(s), improper gas, or a restricted heat exchanger. Action must be taken to correct the problem.

If it becomes necessary to clean the heat exchangers because of dust or corrosion, proceed as follows:

1. Turn OFF gas and electrical power to furnace.
2. Remove outer access door.
3. Disconnect vent connector from furnace vent elbow.
4. For downflow or horizontal furnace having an internal vent pipe, remove internal vent pipe within the casing.
5. Disconnect wires to the following components. Mark wires to aid in reconnection of:
   a. Draft safeguard switch.
   b. Inducer motor.
   c. Pressure switch(es).
   d. Limit overtemperature switch.
   e. Gas valve.
   f. Hot surface ignitor.
   g. Flame-sensing electrode
   h. Flame rollout switches.
6. Remove screws that fasten the collector box assembly to the cell panel. Be careful not to damage the collector box. Inducer assembly and elbow need not be removed from collector box.
7. Disconnect gas line from gas manifold.
8. Remove the 4 screws that attach the burner assembly to the cell panel. The gas valve and individual burners need not be removed from support assembly. Remove NOx baffles if installed.

NOTE: Be very careful when removing burner assembly to avoid breaking ignitor. See Fig. 51 and 52 for correct ignitor location.

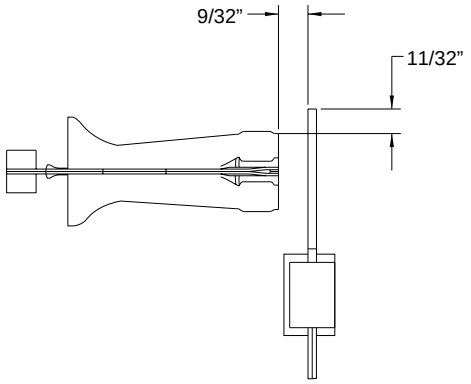

A02150

Fig. 51—Position of Ignitor to Burner

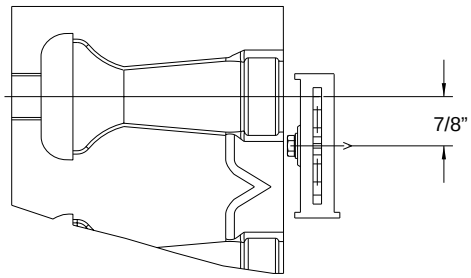

A02151

Fig. 52—Position of Ignitor to Burner

9. Using field-provided 25-caliber rifle cleaning brush, 1/4″ diameter steel spring cable, 36 in. long, a variable speed, reversible electric drill, and vacuum cleaner, clean cells as follows:
   a. Remove metal screw fitting from wire brush to allow insertion into cable.
   b. Insert the twisted wire end of brush into end of spring cable, and crimp tight with crimping tool or crimp by striking with ball-peen hammer. TIGHTNESS IS VERY IMPORTANT.

NOTE: The materials needed in item 9 can usually be purchased at local hardware stores.

(1.) Attach variable-speed, reversible drill to the end of spring cable (end opposite brush).

(2.) Insert brush end of cable into the outlet opening of cell and slowly rotate with drill. DO NOT force cable. Gradually insert cable into upper pass of cell. (See Fig. 49.)

(3.) Work cable in and out of cell 3 or 4 times to obtain sufficient cleaning. DO NOT pull cable with great force. Reverse drill and gradually work cable out.

(4.) Insert brush end of cable in burner inlet opening of cell, and proceed to clean 2 lower passes of cell in same manner as upper pass.

(5.) Repeat foregoing procedures until each cell in furnace has been cleaned.

(6.) Using vacuum cleaner, remove residue from each cell.

(7.) Using vacuum cleaner with soft brush attachment, clean burner assembly.

(8.) Clean flame sensor with fine steel wool.

(9.) Install NOx baffles (if removed).

(10.) Reinstall burner assembly. Center burners in cell openings.

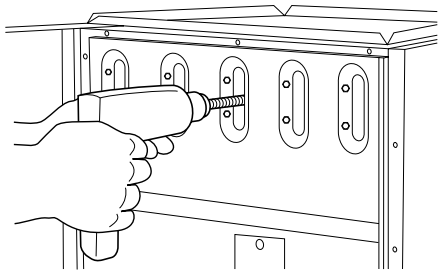

A91252

Fig. 53—Cleaning Heat Exchanger Cell

10. Remove old sealant from cell panel and inducer backing plate flange.
11. Spray releasing agent on the heat exchanger cell panel where collector box assembly contacts cell panel.

NOTE: A releasing agent such as cooking spray or equivalent (must not contain corn or canola oil, aromatic or halogenated hydrocarbons or inadequate seal may occur) and RTV sealant (G.E. 162, 6702, or Dow-Corning 738) are needed before starting installation. DO NOT substitute any other type of RTV sealant. G.E. 162 (P771-9003) is available through RCD in 3-oz tubes.

12. Apply new sealant to flange of inducer assembly and attach to cell panel using existing screws, making sure all screws are secure.
13. Reconnect wires to the following components. (Use connection diagram on wiring label, if wires were not marked for reconnection locations.):
   a. Draft safeguard switch.
   b. Inducer motor.
   c. Pressure switch(es).
   d. Limit over-temperature switch.

e. Gas valve.

f. Hot surface ignitor.

g. Flame-sensing electrode.

h. Flame rollout switches.

i. Install NOx baffles (if removed).

14. Reinstall internal vent pipe, if applicable.
15. Reinstall vent connector on furnace vent elbow. Securely fasten vent connector to vent elbow with 2 field-supplied, corrosion-resistant, sheet metal screws located 180° apart.
16. Replace blower access door only.
17. Set thermostat above room temperature and check furnace for proper operation.
18. Verify blower airflow and speed changes between heating and cooling.
19. Check for gas leaks.

⚠ WARNING

Never use a match or other open flame to check for gas leaks. Use a soap-and-water solution. A failure to follow this warning could result in fire, personal injury, or death.

20. Replace outer access door.

Step 3—Sequence of Operation

→ **NOTE:** Furnace control must be grounded for proper operation or control will lock out. Control is grounded through green/yellow wire routed to gas valve and manifold bracket screw.

Using the schematic diagram in Fig. 46, follow the sequence of operation through the different modes. Read and follow the wiring diagram very carefully.

NOTE: If a power interruption occurs during a call for heat (W), the control will start a 90-second blower-only ON period two seconds after power is restored, if the thermostat is still calling for gas heating. The Amber LED light will flash code 12 during the 90-second period, after which the LED will be ON continuous, as long as no faults are detected. After the 90-second period, the furnace will respond to the thermostat normally.

The blower door must be installed for power to be conducted through the blower door interlock switch ILK to the furnace control CPU, transformer TRAN, inducer motor IDM, blower motor BLWM, hot-surface igniter HSI, and gas valve GV.

1. **Heating**
   (See Fig. 24 for thermostat connections.)
   The wall thermostat ″calls for heat,″ closing the R to W circuit. The furnace control performs a self-check, verifies the pressure switch contacts PRS is open, and starts the inducer motor IDM.

   a. **Inducer Prepurge Period**- As the inducer motor IDM comes up to speed, the pressure switch contacts PRS close to begin a 15-second prepurge period.

   b. **Ignitor Warm-Up**- At the end of the prepurge period, the Hot-Surface ignitor HSI is energized for a 17-second ignitor warm-up period.

   c. **Trial-for-Ignition Sequence**- When the ignitor warm-up period is completed the main gas valve relay contacts GVR-1 and -2 close to energize the gas valve GV, the gas valve opens, and 24 vac power is supplied for a field-installed humidifier at the HUM terminal. The gas valve GV permits gas flow to the burners where it is ignited. After 5 seconds, the ignitor HSI is de-energized and a 2-second Flame-Proving period begins.

   d. **Flame-Proving**- When the burner flame is proved at the flame-proving sensor electrode FSE, the furnace control CPU begins the blower-ON delay period and continues to hold the gas valve GV open. If the burner flame is not proved within two seconds, the control CPU will close the gas valve GV, and the control CPU will repeat the ignition sequence for up to three more Trials-For-Ignition before going to Ignition-Lockout. **Lockout will be reset** automatically after three hours or by momentarily interrupting 115 vac power to the furnace, or by interrupting 24 vac power at SEC1 or SEC2 to the furnace control CPU (not at W, G, R, etc.).
   If flame is proved when flame should not be present, the furnace control CPU will lock out of Gas-Heating mode and operate the inducer motor IDM until flame is no longer proved.

   e. **Blower-On Delay**- If the burner flame is proven, the blower motor is energized on HEAT speed 25 seconds after the gas valve GV is energized.
   Simultaneously, the electronic air cleaner terminal EAC-1 is energized and remains energized as long as the blower motor BLWM is energized.

   f. **Blower-Off Delay**- When the thermostat is satisfied, the R-to-W circuit is opened, de-energizing the gas valve GV, stopping gas flow to the burners, and de-energizing the humidifier terminal HUM. The inducer motor IDM will remain energized for a 5-second post-purge period. The blower motor BLWM and air cleaner terminal EAC-1 will remain energized for 90, 120, 150, or 180 seconds (depending on the blower-OFF delay selection). The furnace control CPU is factory-set for a 120-second blower-OFF delay.

2. **Cooling Mode**
   The thermostat "calls for cooling."

   a. **Single-Speed Cooling**
   (See Fig. 24, 25, 27, and 29 for thermostat connections)

   The thermostat closes the R to G-and-Y circuits. The R to Y circuit starts the outdoor unit, and the R to G-and-Y/Y2 circuits start the furnace blower motor BLWM on COOL speed.
   The electronic air cleaner terminal EAC-1 is energized with 115 vac when the blower motor BLWM is operating.
   When the thermostat is satisfied, the R to G-and-Y circuits are opened. The outdoor unit will stop, and the furnace blower motor BLWM will continue operating on the COOL speed for an additional 90 seconds. Jumper Y/Y2 to DHUM to reduce the cooling off-delay to 5 seconds. (See Fig. 23.)

   b. **Two-Speed Cooling**
   (See Fig. 28, 30, and 31 for thermostat connections.)

   The thermostat closes the R to G-and-Y1 circuits for low-cooling or closes the R to G and-Y1-and-Y2 circuits for high-cooling. The R to Y1 circuit starts the outdoor unit on low-cooling speed, and the R to G-and-Y1 circuit starts the furnace blower motor BLWM on low-cool speed (same speed as FAN). The R to Y1-and-Y2 circuits start the outdoor unit on high-cooling speed, and the R to G-and-Y/Y2 circuits start the furnace blower motor BLWM on COOL speed.
   The electronic air cleaner terminal EAC-1 is energized with 115 vac whenever the blower motor BLWM is operating.
   When the thermostat is satisfied, the R to G and-Y1 or R to G and-Y1 and-Y2 circuits are opened. The outdoor unit

stops, and the furnace blower BLWM and electronic air cleaner terminal EAC-1 will remain energized for an additional 90 seconds. Jumper Y1 to DHUM to reduce the cooling off-delay to 5 seconds. (See Fig. 23.)

3. **Thermidistat Mode**
(See Fig. 25-28 for Thermidistat connections.)
The dehumidification output, DHUM on the Thermidistat should be connected to the furnace control thermostat terminal DHUM. When there is a dehumidify demand, the DHUM input is activated, which means 24 vac signal is removed from the DHUM input terminal. In other words, the DHUM input logic is reversed. The DHUM input is turned ON when no dehumidify demand exists. Once 24 vac is detected by the furnace control on the DHUM input, the furnace control operates in Thermidistat mode. If the DHUM input is low for more than 48 hours, the furnace control reverts back to non-Thermidistat mode.
The cooling operation described in item 2. above also applies to operation with a Thermidistat. The exceptions are listed below:
   a. When the R to G-and-Y1 circuit is closed and there is a demand for dehumidification, the furnace blower motor BLWM will continue running at low-cool speed (same speed as FAN).
   b. When the R to G-and Y/Y2 circuit is closed and there is a demand for dehumidification, the furnace blower motor BLWM will drop the blower speed from COOL to HEAT for a maximum of 10 minutes before reverting back to COOL speed. If there is still a demand for dehumidification after 20 minutes, the furnace control CPU will drop the blower speed back to HEAT speed. This alternating 10-minute cycle will continue as long as there is a call for cooling.
   c. When the ″call for cooling″ is satisfied and there is a demand for dehumidification, the cooling blower-off delay is decreased from 90 seconds to 5 seconds.

4. **Continuous Blower Mode**
When the R to G circuit is closed by the thermostat, the blower motor BLWM will operate on continuous-blower speed (can be adjusted to FAN, HEAT, or COOL speed) at the thermostat. Factory default is FAN speed. Terminal EAC-1 is energized as long as the blower motor BLWM is energized.
During a call for heat, the blower BLWM will stop during igniter warm-up (17 seconds), ignition (7 seconds), and blower-ON delay (25 seconds), allowing the furnace heat exchangers to heat up more quickly, then restarts at the end of the blower-ON delay period at HEAT speed.
In heating, the furnace control CPU will hold the blower motor BLWM at HEAT speed during the selected blower-OFF delay period before reverting to continuous-blower speed.
When the thermostat ″calls for low-cooling″, the blower motor BLWM will switch to operate at low-cool speed (same speed as FAN). When the thermostat is satisfied, the blower motor BLWM will operate an additional 90 seconds on low-cool speed (same speed as FAN) before reverting back to continuous-blower speed.
When the thermostat ″calls for high-cooling″, the blower motor BLWM will operate at COOL speed. When the thermostat is satisfied, the blower motor BLWM will operate an additional 90 seconds on COOL speed before reverting back to continuous-blower speed.
When the R to G circuit is opened, the blower motor BLWM will continue operating for an additional 5 seconds, if no other function requires blower motor BLWM operation.
Continuous Blower Speed Selection from Thermostat -To select different continuous-blower speeds from the room thermostat, momentarily turn off the FAN switch or push-button on the room thermostat for 1-3 seconds after the blower motor BLWM is operating. The furnace control CPU will shift the continuous-blower speed from the factory setting of FAN to HEAT speed. Momentarily turning off the FAN switch again at the thermostat will shift the continuous-blower speed from HEAT to COOL. Repeating the procedure will shift the continuous-blower speed from COOL to FAN speed. The selection can be changed as many times as desired and is stored in the memory to be automatically used following a power interruption.

5. **Heat pump**
(See Fig. 27-30 for thermostat connections.)
When installed with a heat pump, the furnace control automatically changes the timing sequence to avoid long blower off times during demand defrost cycles. When the R to W-and-Y1 or R to W-and-Y1-and-G circuits are energized the furnace control CPU will switch to or turn on the blower motor BLWM at HEAT speed, and begin a heating cycle. The blower motor BLWM will remain on until the end of the prepurge period, then shut off for 24 seconds then come back on at HEAT speed. When the W input signal disappears, the furnace control begins a normal inducer post-purge period and the blower remains running at HEAT speed for the selected blower-OFF delay period then switches to low-cool speed (same speed as FAN). If the R to W-and-Y1-and-G signals disappear at the same time, the blower motor BLWM will remain on for the selected blower-OFF delay period. If the R to W-and-Y1 signals disappear, leaving the G signal, the blower motor BLWM will remain on for the selected blower-OFF delay period then switch to continuous-blower speed.
When the R to W-and-Y/Y2, R to W-and-Y/Y2-and-G, R to W-and-Y1-and-Y/Y2, or R to W-and-Y1-and-Y/Y2-and-G circuits are energized the furnace control CPU will switch to or turn on the blower motor BLWM at HEAT speed, and begin a heating cycle. The blower motor BLWM will remain on until the end of the prepurge period, then shut off for 24 seconds then come back on at HEAT speed. When the W input signal disappears, the furnace control begins a normal inducer post-purge period and the blower switches to COOL speed after a 3 second delay. If the R to W-and-Y/Y2-and-G or R to W-and-Y1-and-Y/Y2-and-G signals disappear at the same time, the blower motor BLWM will remain on for the selected blower-OFF delay period. If the R to W-and-Y/Y2 or R to W-and-Y1-and-Y/Y2 signals disappear, leaving the G signal, the blower motor BLWM will remain on for the selected blower-OFF delay period then switch to continuous-blower speed.

Step 4—Wiring Diagrams

Refer to Fig. 24 and 46 for wiring diagrams.

Step 5—Troubleshooting

Refer to the service label. (See Fig. 50—Service Label.)

The Troubleshooting Guide can be a useful tool in isolating furnace operation problems. Beginning with the word “Start,” answer each question and follow the appropriate arrow to the next item.

The Guide will help to identify the problem or failed component. After replacing any component, verify correct operation sequence.

TABLE 10—Orifice Size* and Manifold Pressure For Gas Input Rate
(Tabulated Data Based On 22,000 Btuh Per Burner, Derated 4 Percent For Each 1000 Ft Above Sea Level)

ALTITUDE RANGE (FT)		AVG GAS HEAT VALUE (BTU/CU FT)	SPECIFIC GRAVITY OF NATURAL GAS							
			0.58		0.60		0.62		0.64	
			Orifice No.	Manifold Pressure	Orifice No.	Manifold Pressure	Orifice No.	Manifold Pressure	Orifice No.	Manifold Pressure
U.S.A. and Canada	0 to 2000	900	42	3.5	42	3.6	42	3.7	41	3.5
		925	42	3.3	42	3.4	42	3.5	42	3.7
		950	43	3.8	42	3.3	42	3.4	42	3.5
		975	43	3.6	43	3.8	42	3.2	42	3.3
		1000	43	3.5	43	3.6	43	3.7	43	3.8
		1025	43	3.3	43	3.4	43	3.5	43	3.6
		1050	44	3.6	43	3.2	43	3.4	43	3.5
		1075	44	3.4	44	3.5	43	3.2	43	3.3
		1100	44	3.3	44	3.4	44	3.5	43	3.2
ALTITUDE RANGE (FT)		AVG GAS HEAT VALUE (BTU/CU FT)	SPECIFIC GRAVITY OF NATURAL GAS							
			0.58		0.60		0.62		0.64	
			Orifice No.	Manifold Pressure	Orifice No.	Manifold Pressure	Orifice No.	Manifold Pressure	Orifice No.	Manifold Pressure
U.S.A. and Canada	U.S.A. Altitudes 2001 to 3000 or Canada Altitudes 2000 to 4500	800	42	3.4	42	3.5	42	3.6	42	3.7
		825	42	3.2	42	3.3	42	3.4	42	3.5
		850	43	3.7	43	3.8	42	3.2	42	3.3
		875	43	3.5	43	3.6	43	3.7	43	3.8
		900	43	3.3	43	3.4	43	3.5	43	3.6
		925	43	3.1	43	3.2	43	3.3	43	3.4
		950	43	2.9	43	3.0	43	3.1	43	3.2
		975	43	2.8	43	2.9	43	3.0	43	3.1
		1000	43	2.6	43	2.7	43	2.8	43	2.9
ALTITUDE RANGE (FT)		AVG GAS HEAT VALUE (BTU/CU FT)	SPECIFIC GRAVITY OF NATURAL GAS							
			0.58		0.60		0.62		0.64	
			Orifice No.	Manifold Pressure	Orifice No.	Manifold Pressure	Orifice No.	Manifold Pressure	Orifice No.	Manifold Pressure
U.S.A. Only	3001 to 4000	775	42	3.2	42	3.3	42	3.4	42	3.5
		800	43	3.6	43	3.8	42	3.2	42	3.3
		825	43	3.4	43	3.5	43	3.7	43	3.8
		850	43	3.2	43	3.3	43	3.4	43	3.6
		875	43	3.0	43	3.1	43	3.3	43	3.4
		900	43	2.9	43	3.0	43	3.1	43	3.2
		925	43	2.7	43	2.8	43	2.9	43	3.0
		950	43	2.6	43	2.7	43	2.8	43	2.8
ALTITUDE RANGE (FT)		AVG GAS HEAT VALUE (BTU/CU FT)	SPECIFIC GRAVITY OF NATURAL GAS							
			0.58		0.60		0.62		0.64	
			Orifice No.	Manifold Pressure	Orifice No.	Manifold Pressure	Orifice No.	Manifold Pressure	Orifice No.	Manifold Pressure
U.S.A. Only	4001 to 5000	750	43	3.6	43	3.8	42	3.2	42	3.3
		775	43	3.4	43	3.5	43	3.6	43	3.8
		800	43	3.2	43	3.3	43	3.4	43	3.5
		825	43	3.0	43	3.1	43	3.2	43	3.3
		850	43	2.8	43	2.9	43	3.0	43	3.1
		875	43	2.7	43	2.8	43	2.9	43	2.9
		900	43	2.5	43	2.6	43	2.7	43	2.8
		925	43	2.4	43	2.5	43	2.6	43	2.6

* Orifice numbers 43 are factory installed

Table 10—Orifice Size* And Manifold Pressure For Gas Input Rate (Continued)
(Tabulated Data Based On 22,000 Btuh Per Burner, Derated 4 Percent For Each 1000 Ft Above Sea Level)

ALTITUDE RANGE (FT)		AVG GAS HEAT VALUE AT ALTITUDE (BTU/CU FT)	SPECIFIC GRAVITY OF NATURAL GAS							
			0.58		0.60		0.62		0.64	
			Orifice No.	Manifold Pressure	Orifice No.	Manifold Pressure	Orifice No.	Manifold Pressure	Orifice No.	Manifold Pressure
U.S.A. Only	5001 to 6000	725	43	3.4	43	3.5	43	3.6	43	3.7
		750	43	3.2	43	3.3	43	3.4	43	3.5
		775	43	3.0	43	3.1	43	3.2	43	3.3
		800	43	2.8	43	2.9	43	3.0	43	3.1
		825	43	2.6	43	2.7	43	2.8	43	2.9
		850	43	2.5	43	2.5	43	2.6	43	2.7
		875	43	2.3	43	2.4	43	2.5	43	2.6
		900	43	2.2	43	2.3	43	2.3	43	2.4
ALTITUDE RANGE (FT)		AVG GAS HEAT VALUE AT ALTITUDE (BTU/CU FT)	SPECIFIC GRAVITY OF NATURAL GAS							
			0.58		0.60		0.62		0.64	
			Orifice No.	Manifold Pressure	Orifice No.	Manifold Pressure	Orifice No.	Manifold Pressure	Orifice No.	Manifold Pressure
U.S.A. Only	6001 to 7000	675	43	3.4	43	3.5	43	3.6	43	3.7
		700	43	3.1	43	3.3	43	3.4	43	3.5
		725	43	2.9	43	3.0	43	3.1	43	3.2
		750	43	2.7	43	2.8	43	2.9	43	3.0
		775	43	2.6	43	2.7	43	2.7	43	2.8
		800	43	2.4	43	2.5	43	2.6	43	2.7
		825	43	2.3	43	2.3	43	2.4	43	2.5
		850	43	2.1	43	2.2	43	2.3	43	2.4
ALTITUDE RANGE (FT)		AVG GAS HEAT VALUE AT ALTITUDE (BTU/CU FT)	SPECIFIC GRAVITY OF NATURAL GAS							
			0.58		0.60		0.62		0.64	
			Orifice No.	Manifold Pressure	Orifice No.	Manifold Pressure	Orifice No.	Manifold Pressure	Orifice No.	Manifold Pressure
U.S.A. Only	7001 to 8000	650	43	3.1	43	3.2	43	3.4	43	3.5
		675	43	2.9	43	3.0	43	3.1	43	3.2
		700	43	2.7	43	2.8	43	2.9	43	3.0
		725	43	2.5	43	2.6	43	2.7	43	2.8
		750	43	2.4	43	2.4	43	2.5	43	2.6
		775	43	2.2	43	2.3	43	2.4	43	2.4
		800	43	2.1	43	2.1	43	2.2	43	2.3
		825	48	3.7	43	2.0	43	2.1	43	2.2
ALTITUDE RANGE (FT)		AVG GAS HEAT VALUE AT ALTITUDE (BTU/CU FT)	SPECIFIC GRAVITY OF NATURAL GAS							
			0.58		0.60		0.62		0.64	
			Orifice No.	Manifold Pressure	Orifice No.	Manifold Pressure	Orifice No.	Manifold Pressure	Orifice No.	Manifold Pressure
U.S.A. Only	8001 to 9000	625	43	2.9	43	3.0	43	3.1	43	3.2
		650	43	2.7	43	2.8	43	2.9	43	3.0
		675	43	2.5	43	2.6	43	2.7	43	2.8
		700	43	2.3	43	2.4	43	2.5	43	2.6
		725	43	2.2	43	2.2	43	2.3	43	2.4
		750	43	2.0	43	2.1	43	2.2	43	2.2
		775	48	3.6	48	3.7	43	2.0	43	2.1

* Orifice numbers 43 are factory installed

Table 10—Orifice Size* And Manifold Pressure For Gas Input Rate (Continued)
(Tabulated Data Based On 22,000 Btuh Per Burner, Derated 4 Percent For Each 1000 Ft Above Sea Level)

ALTITUDE RANGE (FT)		AVG GAS HEAT VALUE AT ALTITUDE (BTU/CU FT)	SPECIFIC GRAVITY OF NATURAL GAS							
			0.58		0.60		0.62		0.64	
			Orifice No.	Manifold Pressure	Orifice No.	Manifold Pressure	Orifice No.	Manifold Pressure	Orifice No.	Manifold Pressure
U.S.A. Only	9001 to 10,000	600	43	2.7	43	2.8	43	2.9	43	3.0
		625	43	2.5	43	2.6	43	2.6	43	2.7
		650	43	2.3	43	2.4	43	2.4	43	2.5
		675	43	2.1	43	2.2	43	2.3	43	2.3
		700	48	3.7	43	2.0	43	2.1	43	2.2
		725	48	3.5	48	3.6	48	3.7	43	2.0

* Orifice numbers 43 are factory installed

TABLE 11—Orifice Size* and Manifold Pressure For Gas Input Rate
(Tabulated Data Based On 21,000 Btuh Per Burner, Derated 4 Percent For Each 1000 Ft Above Sea Level)

ALTITUDE RANGE (FT)		AVG GAS HEAT VALUE (BTU/CU FT)	SPECIFIC GRAVITY OF NATURAL GAS							
			0.58		0.60		0.62		0.64	
			Orifice No.	Manifold Pressure	Orifice No.	Manifold Pressure	Orifice No.	Manifold Pressure	Orifice No.	Manifold Pressure
U.S.A. and Canada	0 to 2000	900	42	3.2	42	3.3	42	3.4	42	3.5
		925	43	3.7	43	3.8	42	3.2	42	3.3
		950	43	3.5	43	3.6	43	3.7	43	3.8
		975	43	3.3	43	3.4	43	3.5	43	3.7
		1000	44	3.6	43	3.3	43	3.4	43	3.5
		1025	44	3.4	44	3.6	43	3.2	43	3.3
		1050	44	3.3	44	3.4	44	3.5	43	3.2
		1075	45	3.8	44	3.2	44	3.3	44	3.4
		1100	46	3.8	45	3.7	44	3.2	44	3.3
ALTITUDE RANGE (FT)		AVG GAS HEAT VALUE (BTU/CU FT)	SPECIFIC GRAVITY OF NATURAL GAS							
			0.58		0.60		0.62		0.64	
			Orifice No.	Manifold Pressure	Orifice No.	Manifold Pressure	Orifice No.	Manifold Pressure	Orifice No.	Manifold Pressure
U.S.A. and Canada	U.S.A. Altitudes 2001 to 3000 or Canada Altitudes 2000 to 4500	800	43	3.8	42	3.2	42	3.3	42	3.4
		825	43	3.5	43	3.7	43	3.8	42	3.2
		850	43	3.3	43	3.5	43	3.6	43	3.7
		875	43	3.2	43	3.3	43	3.4	43	3.5
		900	43	3.0	43	3.1	43	3.2	43	3.3
		925	43	2.8	43	2.9	43	3.0	43	3.1
		950	43	2.7	43	2.8	43	2.9	43	2.9
		975	43	2.5	43	2.6	43	2.7	43	2.8
		1000	43	2.4	43	2.5	43	2.6	43	2.7
ALTITUDE RANGE (FT)		AVG GAS HEAT VALUE (BTU/CU FT)	SPECIFIC GRAVITY OF NATURAL GAS							
			0.58		0.60		0.62		0.64	
			Orifice No.	Manifold Pressure	Orifice No.	Manifold Pressure	Orifice No.	Manifold Pressure	Orifice No.	Manifold Pressure
U.S.A. Only	3001 to 4000	775	43	3.5	43	3.7	43	3.8	42	3.2
		800	43	3.3	43	3.4	43	3.5	43	3.7
		825	43	3.1	43	3.2	43	3.3	43	3.4
		850	43	2.9	43	3.0	43	3.1	43	3.2
		875	43	2.8	43	2.9	43	3.0	43	3.1
		900	43	2.6	43	2.7	43	2.8	43	2.9
		925	43	2.5	43	2.6	43	2.7	43	2.7
		950	43	2.4	43	2.4	43	2.5	43	2.6
ALTITUDE RANGE (FT)		AVG GAS HEAT VALUE (BTU/CU FT)	SPECIFIC GRAVITY OF NATURAL GAS							
			0.58		0.60		0.62		0.64	
			Orifice No.	Manifold Pressure	Orifice No.	Manifold Pressure	Orifice No.	Manifold Pressure	Orifice No.	Manifold Pressure
U.S.A. Only	4001 to 5000	750	43	3.3	43	3.4	43	3.5	43	3.6
		775	43	3.1	43	3.2	43	3.3	43	3.4
		800	43	2.9	43	3.0	43	3.1	43	3.2
		825	43	2.7	43	2.8	43	2.9	43	3.0
		850	43	2.6	43	2.7	43	2.8	43	2.8
		875	43	2.4	43	2.5	43	2.6	43	2.7
		900	43	2.3	43	2.4	43	2.5	43	2.5
		925	43	2.2	43	2.2	43	2.3	43	2.4

* Orifice numbers 43 are factory installed

Table 11—Orifice Size* And Manifold Pressure For Gas Input Rate (Continued)
(Tabulated Data Based On 21,000 Btuh Per Burner, Derated 4 Percent For Each 1000 Ft Above Sea Level)

ALTITUDE RANGE (FT)		AVG GAS HEAT VALUE AT ALTITUDE (BTU/CU FT)	SPECIFIC GRAVITY OF NATURAL GAS							
			0.58		0.60		0.62		0.64	
			Orifice No.	Manifold Pressure	Orifice No.	Manifold Pressure	Orifice No.	Manifold Pressure	Orifice No.	Manifold Pressure
U.S.A. Only	5001 to 6000	725	43	3.1	43	3.2	43	3.3	43	3.4
		750	43	2.9	43	3.0	43	3.1	43	3.2
		775	43	2.7	43	2.8	43	2.9	43	3.0
		800	43	2.5	43	2.6	43	2.7	43	2.8
		825	43	2.4	43	2.5	43	2.5	43	2.6
		850	43	2.2	43	2.3	43	2.4	43	2.5
		875	43	2.1	43	2.2	43	2.3	43	2.3
		900	43	2.0	43	2.1	43	2.1	43	2.2
ALTITUDE RANGE (FT)		AVG GAS HEAT VALUE AT ALTITUDE (BTU/CU FT)	SPECIFIC GRAVITY OF NATURAL GAS							
			0.58		0.60		0.62		0.64	
			Orifice No.	Manifold Pressure	Orifice No.	Manifold Pressure	Orifice No.	Manifold Pressure	Orifice No.	Manifold Pressure
U.S.A. Only	6001 to 7000	675	43	3.1	43	3.2	43	3.3	43	3.4
		700	43	2.9	43	3.0	43	3.1	43	3.2
		725	43	2.7	43	2.8	43	2.9	43	2.9
		750	43	2.5	43	2.6	43	2.7	43	2.8
		775	43	2.3	43	2.4	43	2.5	43	2.6
		800	43	2.2	43	2.3	43	2.3	43	2.4
		825	43	2.1	43	2.1	43	2.2	43	2.3
		850	48	3.7	43	2.0	43	2.1	43	2.1
ALTITUDE RANGE (FT)		AVG GAS HEAT VALUE AT ALTITUDE (BTU/CU FT)	SPECIFIC GRAVITY OF NATURAL GAS							
			0.58		0.60		0.62		0.64	
			Orifice No.	Manifold Pressure	Orifice No.	Manifold Pressure	Orifice No.	Manifold Pressure	Orifice No.	Manifold Pressure
U.S.A. Only	7001 to 8000	650	43	2.9	43	3.0	43	3.1	43	3.2
		675	43	2.7	43	2.7	43	2.8	43	2.9
		700	43	2.5	43	2.6	43	2.6	43	2.7
		725	43	2.3	43	2.4	43	2.5	43	2.5
		750	43	2.1	43	2.2	43	2.3	43	2.4
		775	43	2.0	43	2.1	43	2.2	43	2.2
		800	48	3.6	48	3.7	43	2.0	43	2.1
		825	48	3.3	48	3.5	48	3.6	48	3.7
ALTITUDE RANGE (FT)		AVG GAS HEAT VALUE AT ALTITUDE (BTU/CU FT)	SPECIFIC GRAVITY OF NATURAL GAS							
			0.58		0.60		0.62		0.64	
			Orifice No.	Manifold Pressure	Orifice No.	Manifold Pressure	Orifice No.	Manifold Pressure	Orifice No.	Manifold Pressure
U.S.A. Only	8001 to 9000	625	43	2.7	43	2.7	43	2.8	43	2.9
		650	43	2.5	43	2.5	43	2.6	43	2.7
		675	43	2.3	43	2.4	43	2.4	43	2.5
		700	43	2.1	43	2.2	43	2.3	43	2.3
		725	48	3.7	43	2.0	43	2.1	43	2.2
		750	48	3.5	48	3.6	48	3.7	43	2.0
		775	49	3.8	48	3.4	48	3.5	48	3.6

* Orifice numbers 43 are factory installed

Table 11—Orifice Size* And Manifold Pressure For Gas Input Rate (Continued)
(Tabulated Data Based On 21,000 Btuh Per Burner, Derated 4 Percent For Each 1000 Ft Above Sea Level)

ALTITUDE RANGE (FT)		AVG GAS HEAT VALUE AT ALTITUDE (BTU/CU FT)	SPECIFIC GRAVITY OF NATURAL GAS							
			0.58		0.60		0.62		0.64	
			Orifice No.	Manifold Pressure	Orifice No.	Manifold Pressure	Orifice No.	Manifold Pressure	Orifice No.	Manifold Pressure
U.S.A. Only	9001 to 10,000	600	43	2.4	43	2.5	43	2.6	43	2.7
		625	43	2.3	43	2.3	43	2.4	43	2.5
		650	43	2.1	43	2.2	43	2.2	43	2.3
		675	48	3.6	48	3.8	43	2.1	43	2.1
		700	48	3.4	48	3.5	48	3.6	48	3.7
		725	49	3.7	49	3.8	48	3.4	48	3.5

* Orifice numbers 43 are factory installed

TROUBLESHOOTING GUIDE

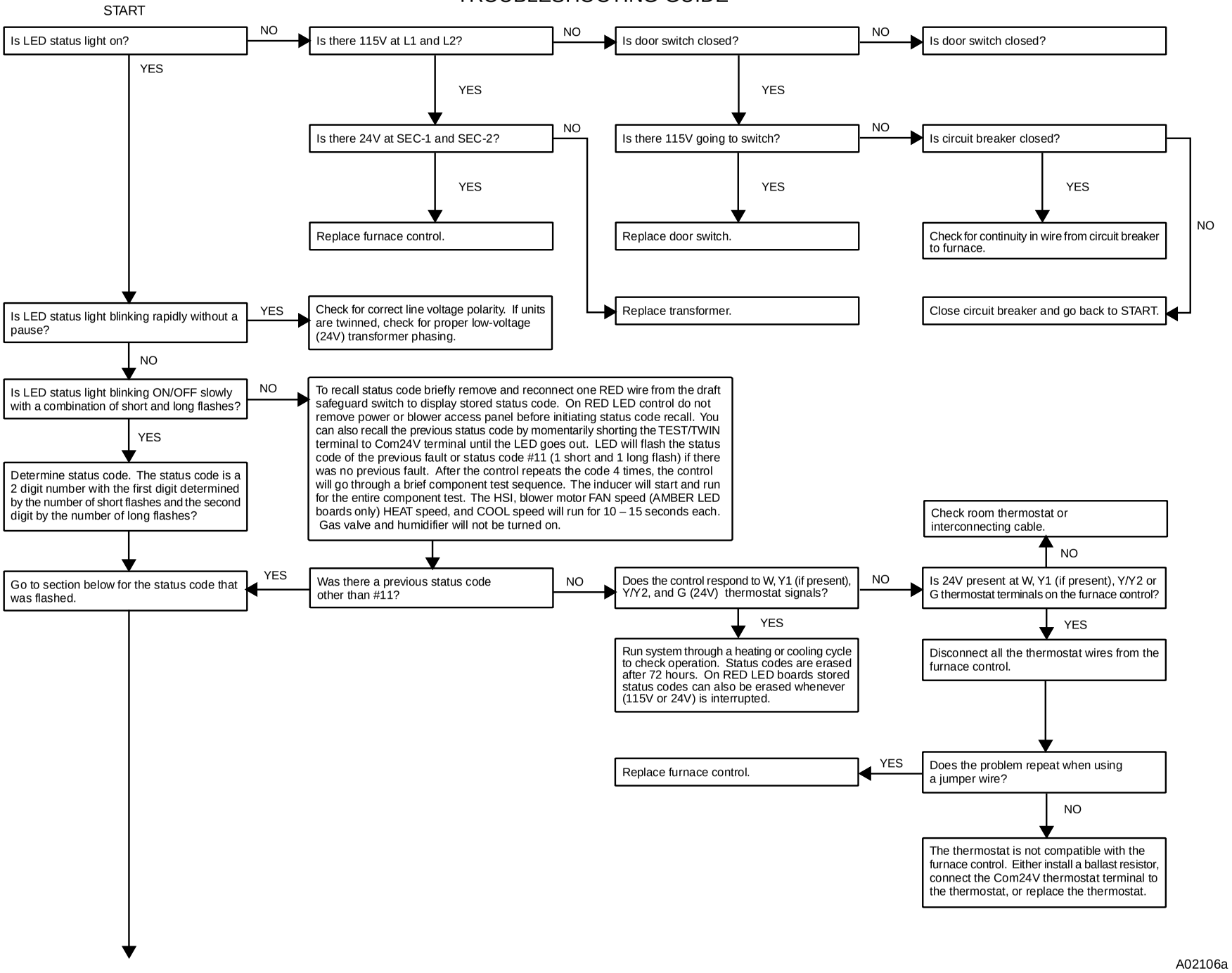

A02106a

11 NO PREVIOUS CODE – Stored codes are erased after 72 hours. On RED LED boards stored status codes can also be erased whenever power (115V or 24V) is interrupted. Run system through a heating or cooling cycle to check system.

12 BLOWER ON AFTER POWER UP – (115V OR 24V) – Normal operation. Blower runs for 90 seconds, if unit is powered up during a call for heat (R-W closed) or when (R-W opens) during the blower on-delay period.

13 LIMIT CIRCUIT LOCKOUT – Lockout occurs if the limit, draft safeguard, flame rollout, or blocked vent switch*(if used) is open longer than 3 minutes. Control will auto-reset after 3 hours. See code 33.

14 IGNITION LOCKOUT – System failed to ignite gas and prove flame in 4 attempts. Control will auto-reset after 3 hours. See status code 34.

21 GAS HEATING LOCKOUT – Turn off power and wait 5 minutes to retry. Check for:
- Stuck closed gas valve relay on control.
- Miswire or short to gas valve wire.

22 ABNORMAL FLAME-PROVING SIGNAL Flame is proved while gas valve is de-energized. Inducer will run until fault is cleared. Check for:
- Stuck open or leaky gas valve.

23 PRESSURE SWITCH DID NOT OPEN Check for:
- Obstructed pressure tube.
- Pressure switch stuck closed.

24 SECONDARY VOLTAGE FUSE IS OPEN Check for:
- Short circuit in secondary voltage (24V) wiring including thermostat leads. Disconnect thermostat leads to isolate short circuit.

31 PRESSURE SWITCH DID NOT CLOSE OR REOPENED – If open longer than 5 minutes, inducer shuts off for 15 minutes before retry. If opens during blower on-delay period, blower will come on for the selected blower off-delay. Check for:
- Proper vent sizing.
- Low inducer voltage (115V).
- Low inlet gas pressure (if LGPS used).
- Inadequate combustion air supply.
- Disconnected or obstructed pressure tubing.
- Defective inducer motor.
- Defective pressure switch.
- Excessive wind.
- Restricted vent.

33 LIMIT CIRCUIT FAULT – Indicates the limit, draft safeguard, flame rollout, or blocked vent switch* (if used) is open. Blower will run for 4 minutes or until open switch remakes whichever is longer. If open longer than 3 minutes, code changes to lockout #13. If open less than 3 min. status code #33 continues to flash until blower shuts off. Flame rollout switch and BVSS requires manual reset. Check for:
- Dirty filter or restricted duct system.
- Loose blower wheel.
- Defective switch or connections.
- Defective blower motor or capacitor.
- Inadequate combustion air supply (flame rollout switch open).
- Restricted vent.
- Proper vent sizing.
- Excessive wind.

34 IGNITION PROVING FAILURE – If flame is not sensed during the trial for ignition period, the control will repeat the ignition sequence 3 more times before lockout #14 occurs. If flame signal is lost during the blower on-delay period, blower will come on for the selected blower off-delay. Check the following items first before proceeding to the next step.
- Gas valve turned off.
- Manual shut-off valve.
- Green/Yellow wire MUST be connected to furnace sheet metal.
- Flame sensor must not be grounded.

To determine whether the problem is in the gas valve, igniter, or flame sensor the system can be operated in the component test mode to check the igniter. First remove the R thermostat connection from the control and initiate the component test sequence. Does the igniter glow orange/white by the end of the 15 second warm-up period?

NO → Unplug igniter harness from control and initiate another component test sequence. Check for 115V between pin 1 and NEUTRAL-L2 on the control. Was 115V present for the 15 second period?
- NO → Replace furnace control.
- YES → Check for continuity in the harness and igniter. Replace defective component.

YES → Reconnect the R thermostat lead and set thermostat to call for heat. Connect voltmeter across gas valve connections. Does gas valve receive 24V?
- NO → Check connections. If OK, replace control.
- YES ↓

Does gas valve open and allow gas to flow?
- NO → Check that all gas valves are turned on. Replace valve.
- YES ↓

Do the main burners ignite?
- NO → Check for:
  - Inadequate flame carryover or rough ignition.
  - Low inlet gas pressure.
  - Proper firing rate.
  - Blocked or incorrect carry- over gap. (.045" nominal)
- YES ↓

Do the main burners stay on?
- YES → Allow blower to come on and repeat test to check for intermittent operation.
- NO ↓

Repeat call for heat and check flame sensor current during trial for ignition period. Is the DC microamps below 0.5?
- NO → Check connections and retry. If current is near typical value (4.0-6.0 nominal) and burners will not stay on, replace control.
- YES ↓

Clean flame sensor with fine steel wool and recheck current. Nominal current is 4.0 to 6.0 microamps.

Is current near typical value?
- NO → Replace electrode.
- YES ↓

Will main burners ignite and stay on?
- NO → Replace furnace control.
- YES ↓

Fixed.

45 CONTROL CIRCUITRY LOCKOUT Auto-reset after 1 hour lockout due to:
- Flame circuit failure.
  - Gas valve relay stuck open.
- Software check error.

Reset power to clear lockout. Replace control if code repeats.

* Blocked vent switch used in Chimney Adapter Kit

A02106b

Copyright 2002 Carrier Corporation

Manufacturer reserves the right to discontinue, or change at any time, specifications or designs without notice and without incurring obligations.