service and maintenance procedures

4-WAY MULTIPOISE FIXED-CAPACITY DIRECT-VENT CONDENSING GAS FURNACE

490AAV

Series D

Cancels: SP05-30

SP05-34
10-96

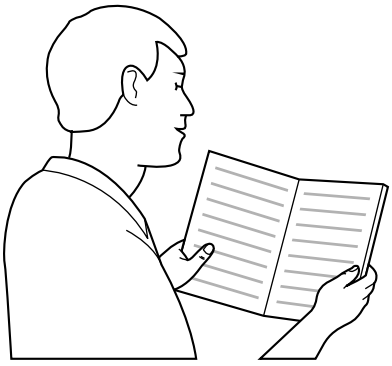

A93040

NOTE: Read the entire instruction manual before performing any service or maintenance.

This symbol → indicates a change since the last issue.

Index Page

SAFETY CONSIDERATIONS....1-2
ELECTROSTATIC DISCHARGE (ESD) PRECAUTIONS....2
GENERAL....2
CARE AND MAINTENANCE....2-11
Cleaning and/or Replacing Air Filter....2-3
Blower Motor and Wheel Maintenance....3-4
Cleaning Burners....4
Cleaning Heat Exchangers....4-5
Primary Heat Exchangers....4-5
Secondary Heat Exchangers....5
Flushing Collector Box and Drainage System....5-7
Servicing Hot Surface Ignitor....7-8
Electrical Controls and Wiring....8
Troubleshooting....9-10
Checking Heat Tape Operation (If Applicable)....10
Winterizing....10-11
WIRING DIAGRAM....12
SERVICE LABEL....13
TROUBLESHOOTING GUIDE....14-15

SAFETY CONSIDERATIONS

Installing and servicing heating equipment can be hazardous due to gas and electrical components. Only trained and qualified personnel should install, repair, or service heating equipment.

Untrained personnel can perform basic maintenance functions such as cleaning and replacing air filters. All other operations must be performed by trained service personnel. When working on heating equipment, observe precautions in the literature, on tags, and on labels attached to or shipped with the unit and other safety precautions that may apply.

→ Follow all safety codes, including NFPA 54/ANSI Z223.1-1996, National Fuel Gas Code and ANSI/NFPA 90B, Installation Standards, Warm Air Heating and Air Conditioning Systems. In Canada, refer to the current edition of the National Standard of Canada CAN/CGA-B-149. Wear safety glasses and work gloves. Have a fire extinguisher available during start-up and adjustment procedures and service calls.

As an ENERGY STAR[SM] Partner, Payne Heating & Cooling has determined that this product meets the ENERGY STAR guidelines for energy efficiency.

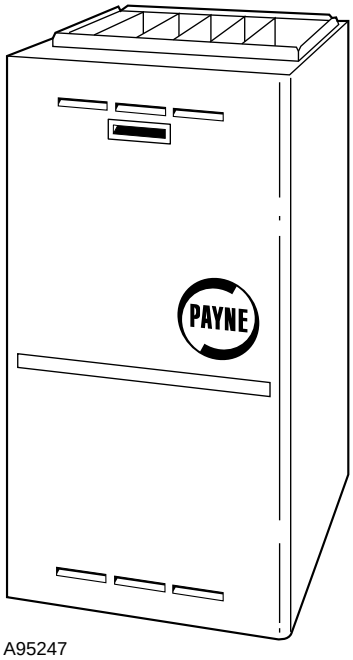

A95247

APPROVALS
ISO 9001
EN 29001
BS 5750 PART 1
ANSI/ASQC Q91

CERTIFICATE NO. FM 29652

CERTIFICATION OF MANUFACTURING SITE

Fig. 1—Multipoise Furnace in Upflow Orientation

Recognize safety information. This is the safety-alert symbol ⚠ . When you see this symbol on the unit and in instructions or manuals, be alert to the potential for personal injury.

Understand the signal words DANGER, WARNING, and CAUTION. These words are used with the safety-alert symbol. DANGER identifies the most serious hazards which **will** result in severe personal injury or death. WARNING signifies hazards which **could** result in personal injury or death. CAUTION is used to identify unsafe practices which **would** result in minor personal injury or product and property damage. NOTE is used to highlight suggestions which **will** result in enhanced installation, reliability, or operation.

⚠ **WARNING:** The ability to properly perform maintenance on this equipment requires certain expertise, mechanical skills, tools, and equipment. If you do not possess these, do not attempt to perform any maintenance on this equipment other than those procedures recommended in the User's Manual. FAILURE TO FOLLOW THIS WARNING COULD RESULT IN POSSIBLE DAMAGE TO THIS EQUIPMENT, SERIOUS PERSONAL INJURY, OR DEATH.

WARNING: Never store anything on, near, or in contact with the furnace, such as:

1. Spray or aerosol cans, rags, brooms, dust mops, vacuum cleaners, or other cleaning tools.
2. Soap powders, bleaches, waxes or other cleaning compounds, plastic or plastic containers, gasoline, kerosene, cigarette lighter fluid, dry cleaning fluids, or other volatile fluids.
3. Paint thinners and other painting compounds, paper bags, or other paper products.

Failure to follow this warning can cause corrosion of the heat exchanger, fire, personal injury, or death.

ELECTROSTATIC DISCHARGE (ESD) PRECAUTIONS

CAUTION: Electrostatic discharge can affect electronic components. Take precautions during furnace installation and servicing to protect the furnace electronic control. Precautions will prevent electrostatic discharges from personnel and hand tools which are held during the procedure. These precautions will help to avoid exposing the control to electrostatic discharge by putting the furnace, the control, and the person at the same electrostatic potential.

1. Disconnect all power to the furnace. DO NOT TOUCH THE CONTROL OR **ANY** WIRE CONNECTED TO THE CONTROL PRIOR TO DISCHARGING YOUR BODY'S ELECTROSTATIC CHARGE TO GROUND.
2. Firmly touch a clean, unpainted, metal surface of the furnace chassis which is close to the control. Tools held in a person's hand during grounding will be satisfactorily discharged.
3. After touching the chassis you may proceed to service the control or connecting wires as long as you do nothing that recharges your body with static electricity (for example; DO NOT move or shuffle your feet, DO NOT touch ungrounded objects, etc.).
4. If you touch ungrounded objects (recharge your body with static electricity), firmly touch furnace again before touching control or wires.
5. Use this procedure for installed and uninstalled (ungrounded) furnaces.
6. Before removing a new control from its container, discharge your body's electrostatic charge to ground to protect the control from damage. If the control is to be installed in a furnace, follow items 1 through 5 before bringing the control or yourself into contact with the furnace. Put all used AND new controls into containers before touching ungrounded objects.
7. An ESD service kit (available from commercial sources) may also be used to prevent ESD damage.

GENERAL

These instructions are written as if the furnace is installed in an upflow application. An upflow furnace application is where the blower is located below the combustion and controls section of the furnace, and conditioned air is discharged upward. Since this furnace can be installed in any of the 4 positions shown in Fig. 2, you may need to revise your orientation to component location accordingly.

CARE AND MAINTENANCE

For continuing high performance and to minimize possible equipment failure, it is essential that maintenance be performed annually on this equipment. Consult your local dealer for maintenance and maintenance contract availability.

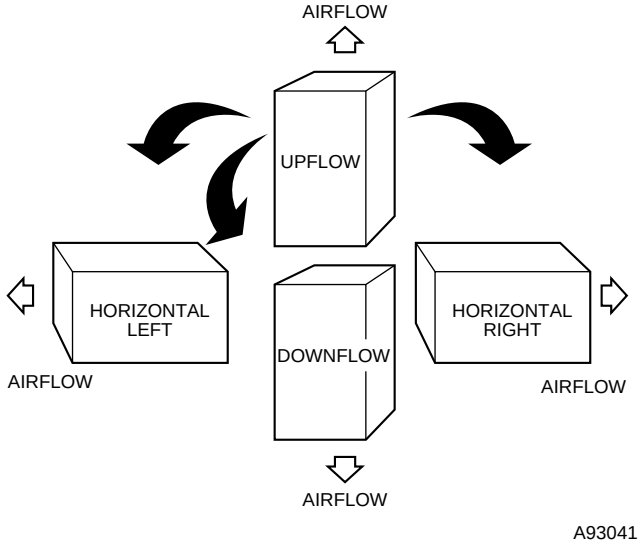

Fig. 2—Multipoise Orientations

WARNING: Turn off the gas and electrical supplies to the unit before performing any maintenance or service. Follow the operating instructions on the label attached to the furnace. Failure to follow this warning could result in personal injury or death.

The minimum maintenance that should be performed on this equipment is as follows:

1. Check and clean or replace air filter each month as required.
2. Check blower motor and wheel for cleanliness annually.
3. Check electrical connections for tightness and controls for proper operation each heating season. Service as necessary.
4. Check for proper condensate drainage. Clean as necessary.
5. Check for blockages in combustion-air and vent pipes annually.
6. Check burners for cleanliness annually.

CAUTION: Personal injury could result from sharp metal edges, etc. Use care when removing parts.

I. CLEANING AND/OR REPLACING AIR FILTER

The air filter arrangement may vary depending on the application or orientation.

CAUTION: Never operate unit without a filter or with the blower access panel removed. Failure to follow this warning could result in a fire or personal injury.

To clean or replace the filters, proceed as follows:

1. Turn off electrical supply to furnace.
2. Remove main furnace door and blower access panel.
3. Release filter retainer wire. (See Fig. 3 and 4.)
4. Slide filter out of furnace.
5. Furnaces are equipped with permanent, washable filter(s). Clean filter by spraying cold tap water through filter in opposite direction of airflow.
6. Rinse filter and let dry. Oiling or coating of filter is not recommended.
7. Place filter in furnace.

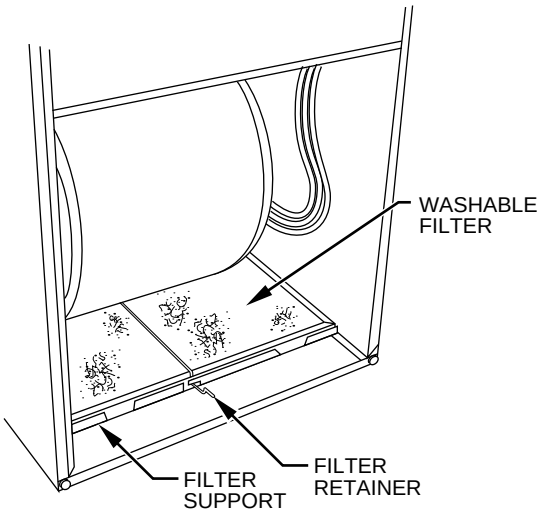

A93046

Fig. 3—Bottom Filter Arrangement

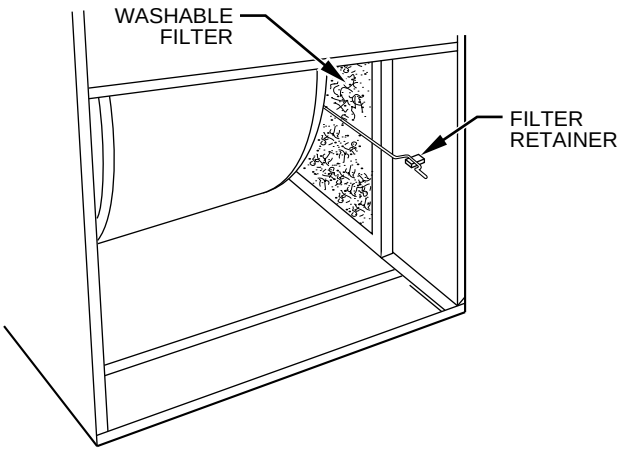

A93045

Fig. 4—Filter Installed for Side Inlet

8. Replace blower access panel and main furnace door.
9. Turn on electrical supply to furnace.

NOTE: If the filter has cross-mesh binding, the binding must face the blower. If the filter has an air direction arrow, the arrow must point toward the blower.

II. BLOWER MOTOR AND WHEEL MAINTENANCE

To ensure long life, economy, and high efficiency, clean accumulated dirt and grease from blower wheel and motor annually.

The inducer and blower motors are pre-lubricated and require no additional lubrication. These motors can be identified by the absence of oil ports on each end of the motor.

The following items should be performed by a qualified service technician.

Clean blower motor and wheel as follows:

1. Turn off electrical supply to furnace.
2. Remove main furnace door and blower access panel.
3. Disconnect wires.

   All factory wires can be left connected, but field thermostat connections may need to be disconnected depending on their length and routing.
4. Position control box, transformer, and door switch assembly to right side of furnace casing.
5. If condensate trap is located in left- or right-hand side of furnace casing, proceed to item 6, otherwise remove trap and tubing as described below.
   a. Disconnect field drain connection from condensate trap.
   b. Disconnect drain and relief port tubes from condensate trap.
   c. Remove condensate trap from blower shelf.
6. Remove screws securing blower assembly to blower shelf and slide blower assembly out of furnace.
7. Clean blower wheel and motor by using a vacuum with soft brush attachment. Be careful not to disturb balance weights (clips) on blower wheel vanes. Do not bend wheel or blades as balance will be affected.
8. If greasy residue is present on blower wheel, remove wheel from the blower housing and wash it with an appropriate degreaser. To remove wheel:
   a. Mark blower wheel location on shaft before disassembly to ensure proper reassembly.
   b. Loosen setscrew holding blower wheel on motor shaft.

NOTE: Mark blower mounting arms and blower housing so each arm is positioned at the same hole location during reassembly.

   c. Mark blower wheel orientation and cutoff plate location to ensure proper reassembly.
   d. Remove screws securing cutoff plate and remove cutoff plate from housing.
   e. Remove bolts holding motor mounts to blower housing and slide motor and mounts out of housing. Disconnect capacitor and ground wire attached to blower housing before removing motor.
   f. Remove blower wheel from housing.
   g. Clean wheel per instructions on degreaser cleaner.
9. Reassemble motor and blower wheel by reversing items 8b through 8f. Ensure wheel is positioned for proper rotation. Be sure to reattach ground wire.
10. Reinstall blower assembly in furnace.
11. Reinstall condensate trap and tubing if previously removed.
    a. Reinstall condensate trap in hole in blower shelf.
    b. Connect condensate trap drain tubes. See Fig. 8 or tubing diagram on main furnace door for proper tube location.
       (1.) Connect 1 tube (blue or blue and white striped) from collector box.
       (2.) Connect 1 tube (violet or unmarked) from inducer housing.
       (3.) Connect 1 tube (relief port, green or pink) from collector box.
    c. Connect field drain to condensate trap.

NOTE: Ensure tubes are not kinked or pinched, as this will affect operation.

12. Reinstall control box, transformer, and door switch assembly on blower shelf.
13. Reconnect wires.

    Refer to furnace wiring diagram, and connect thermostat leads if previously disconnected. (See Fig. 16.)

NOTE: Refer to Table 1 for motor speed lead relocation if leads were not identified before disconnection.

TABLE 1—SPEED SELECTOR

COLOR	SPEED	FACTORY ATTACHED TO
Black	High	Cool
Yellow (When Present)	Medium High	Spare
Blue	Medium Low	Heat
Red	Low	Spare
White	Common	Com

> ⚠ **CAUTION:** Heating speed selection MUST be adjusted to provide proper temperature rise as specified on the rating plate. Failure to adjust the heating speed may shorten heat exchanger life.

14. Turn on electrical supply. Manually close blower access panel door switch. Use a piece of tape to hold switch closed. Check for proper rotation and speed changes between heating and cooling by jumpering R to G and R to Y on control center thermostat terminals. (See Fig. 13.)

> ⚠ **WARNING:** Blower access panel door switch opens 115-v power to control center. No component operation can occur. Caution must be taken when manually closing this switch for service purposes. Failure to follow this warning could result in personal injury or death.

15. If furnace is operating properly, release blower access panel door switch, replace blower access panel, and replace main furnace door.

III. CLEANING BURNERS

The following items should be performed by a qualified service technician. If the burners develop an accumulation of light dirt or dust, they may be cleaned by using the following procedure:

1. Turn off gas and electrical supplies to furnace.
2. Remove main furnace door.
3. Remove burner box cover.
4. Using backup wrench, disconnect gas supply pipe from gas valve.
5. Remove wires from gas valve. Note location for reassembly.

> ⚠ **CAUTION:** Label all wires prior to disconnection when servicing controls. Wiring errors can cause improper and dangerous operation.

6. Remove burner box pressure tube from gas valve regulator fitting.
7. Remove screws that secure manifold to burner box. (See Fig. 5.)
8. Remove manifold, orifices, and gas valve as 1 assembly.
9. Remove screws attaching burner assembly in burner box.
10. Remove burner assembly from burner box.

NOTE: All burners are attached to burner bracket and can be removed as 1 assembly.

11. Clean burners with soft brush and vacuum.
12. Reinstall manifold, orifice, and gas valve assembly in burner box. Ensure manifold seal grommet is installed properly and burners fit over orifices.

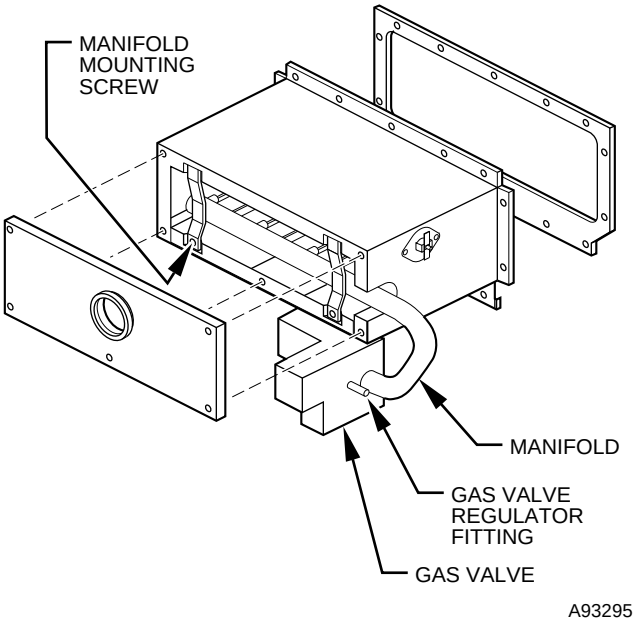

Fig. 5—Burner Box Assembly

13. Reconnect wires to gas valve. Refer to furnace wiring diagram for proper wire location.
14. Reinstall burner box pressure tube to gas valve regulator fitting.
15. Reinstall gas supply pipe to gas valve using backup wrench on gas valve to prevent rotation and improper orientation.

NOTE: Use propane gas resistant pipe dope to prevent gas leaks. DO NOT use Teflon tape.

> ⚠ **WARNING:** Gas valve switch or knob MUST be facing forward or tilted upward. Failure to follow this warning could result in property damage, personal injury, or death.

16. Replace burner box cover.
17. Turn on gas and electrical supplies to furnace.
18. Check for gas leaks.

> ⚠ **WARNING:** Never use matches, candles, flame, or other sources of ignition to check for gas leakage. Use a soap-and-water solution. Failure to follow this warning could result in a fire, personal injury, or death.

19. Replace main furnace door.

IV. CLEANING HEAT EXCHANGERS

The following items should be performed by a qualified service technician.

A. Primary Heat Exchangers

If the heat exchangers get an accumulation of light dirt or dust on the inside, they may be cleaned by the following procedure:

NOTE: If the heat exchangers get a heavy accumulation of soot and carbon, both the primary and secondary heat exchangers should be replaced rather than trying to clean them thoroughly due to their intricate design. A build-up of soot and carbon indicates that a problem exists which needs to be corrected, such as improper adjustment of manifold pressure, insufficient or poor quality combustion air, improper vent termination, incorrect size or damaged manifold orifice(s), improper gas, or a restricted heat exchanger (primary or secondary). Action must be taken to correct the problem.

1. Turn off gas and electrical supplies to furnace.
2. Remove main furnace door.
3. Disconnect wires or connectors to rollout switch, gas valve, ignitor, and flame sensor.

> ⚠ **CAUTION:** Label all wires prior to disconnection when servicing controls. Wiring errors can cause improper and dangerous operation.

4. Disconnect combustion-air intake pipe from intake housing.
5. Remove the pressure switch tube from intake housing.
6. Remove screws attaching intake housing to burner box, and rotate intake housing away from burner box for removal.
7. Using backup wrench, disconnect gas supply pipe from gas valve.
8. Disconnect pressure tubing from gas valve.
9. Remove 2 screws attaching top filler panel and rotate upwards to gain access to screws attaching burner box to cell panel.
10. Remove screws attaching burner box to cell panel. (See Fig. 5.)

NOTE: Burner box cover, manifold, gas valve, and burner assembly should be removed as 1 assembly.

11. Clean heat exchanger openings with a vacuum and a soft brush. (See Fig. 6.)

NOTE: After cleaning, inspect the heat exchangers to ensure they are free of all foreign objects that may restrict flow of combustion products.

12. Reverse items 4 through 10 for reassembly.

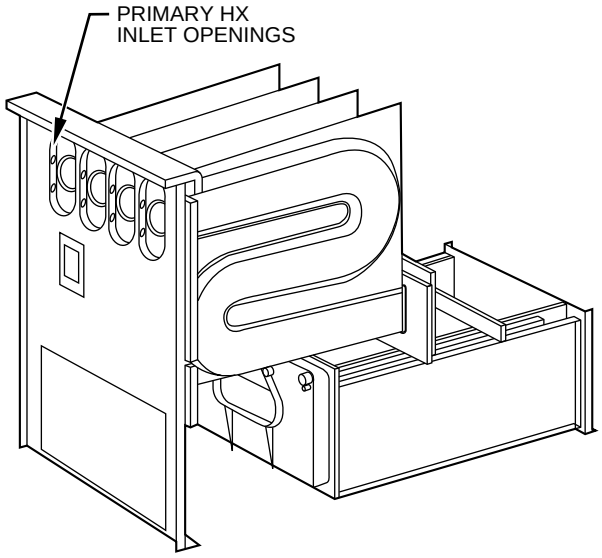

A93080

Fig. 6—Cleaning Inlet Openings of Primary Heat Exchangers

> ⚠ **WARNING:** The ground wire from the gas valve MUST be attached to the burner box attachment screw. Failure to attach this ground wire to an adequate casing ground will cause the furnace control to lock out.

NOTE: Be sure burner box gasket is installed between burner box and cell panel. If gasket is damaged, replace it.

NOTE: Inspect combustion-air intake housing. If foamed gasket was removed, check for any damage. If gasket is damaged in any way, it must be repaired. To repair, remove damaged gasket section, apply sealant releasing agent such as PAM cooking spray or equivalent (must not contain corn or canola oil, aromatic or halogenated hydrocarbons) to burner box and apply a small bead of G.E. RTV 162. G.E. RTV 6702, or Dow-Corning RTV 738 sealant to edge of combustion-air intake housing. (See Fig. 7.)

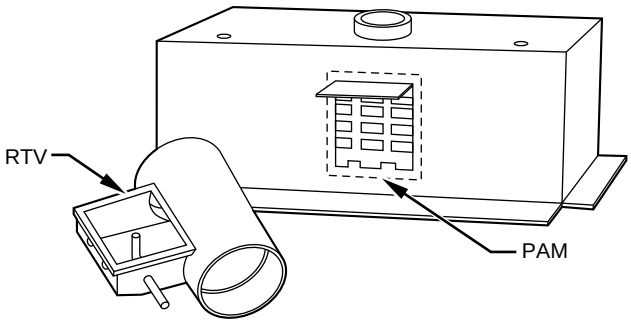

A93087

Fig. 7—Combustion-Air Intake Housing Gasket Repair

13. Refer to furnace wiring diagram and reconnect wires to rollout switch, gas valve, ignitor, and flame sensor.
14. Reconnect pressure switch tubes to gas valve and intake housing. Refer to tube routing label on main furnace door for proper tube location. Be sure tubes are not kinked. (See Fig. 8.)
15. Turn on gas and electrical supplies to furnace.
16. Check furnace operation through 2 complete heat operating cycles. Look through sight glass in burner enclosure to check burners. Burner flames should be clear blue, almost transparent. (See Fig. 9.)
17. Check for gas leaks.

> ⚠ **WARNING:** Never use matches, candles, flame, or other sources of ignition to check for gas leakage. Use a soap-and-water solution. Failure to follow this warning could result in a fire, personal injury, or death.

18. Replace main furnace door.

B. Secondary Heat Exchangers

NOTE: The condensing side (inside) of the secondary heat exchangers CANNOT be serviced or inspected. A small number of bottom outlet openings can be inspected by removing the inducer assembly. See Flushing Collector Box and Drainage System section for details on removing inducer assembly.

V. FLUSHING COLLECTOR BOX AND DRAINAGE SYSTEM

1. Turn off gas and electrical supplies to furnace.
2. Remove main furnace door.
3. Disconnect inducer motor and pressure switch wires or connectors.
4. Disconnect pressure switch tubes.
5. Disconnect vent pipe from inducer housing outlet by loosening clamp.
6. Disconnect drain tube from inducer housing. (See Fig. 8.)
7. Remove inducer housing assembly by removing 4 bolts attaching assembly to cell panel.

INSTALLATION

This appliance requires a special venting system. Refer to the installation instructions for parts list and method of installation. Furnace must be installed level, or pitched forward within 1/2 inch of level for proper drainage. Failure will result in equipment or property damage. See Installation Manual for IMPORTANT unit support details on horizontal applications.

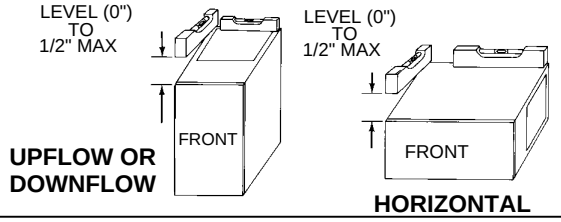

Furnace is shipped from factory in upflow configuration. Pressure tube and drain tube routing MUST match the diagrams below.

Tube location when used in UPFLOW application

Condensate Trap; Factory Installed in Blower Shelf

(Blower access panel removed)

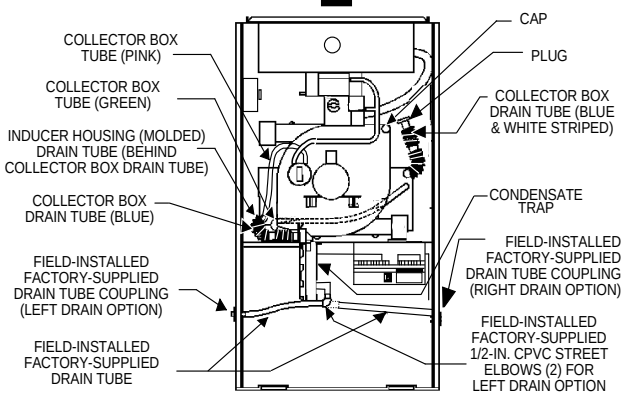

Condensate Trap on LEFT Side Optional

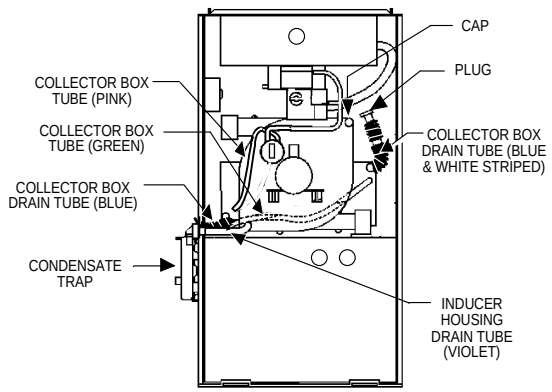

Tube location when used in DOWNFLOW application

Condensate Trap on LEFT Side

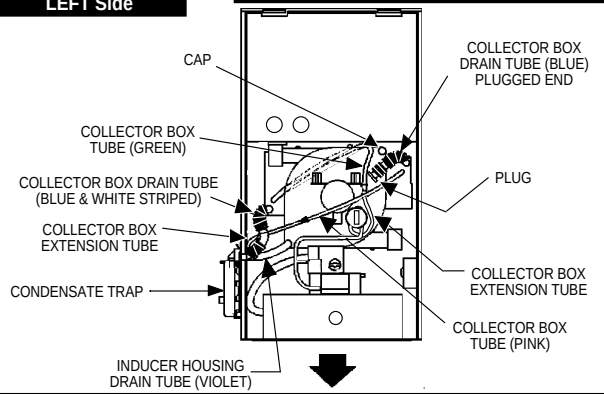

Condensate Trap on RIGHT Side

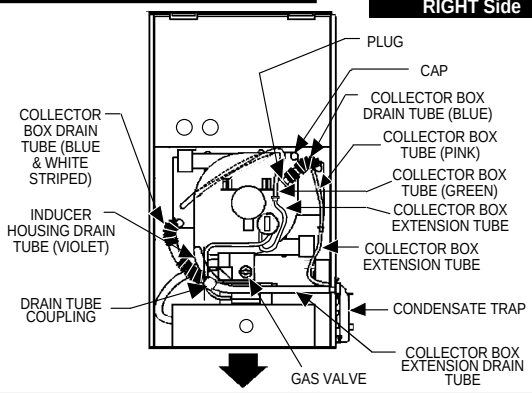

Tube location when used on HORIZONTAL - LEFT application

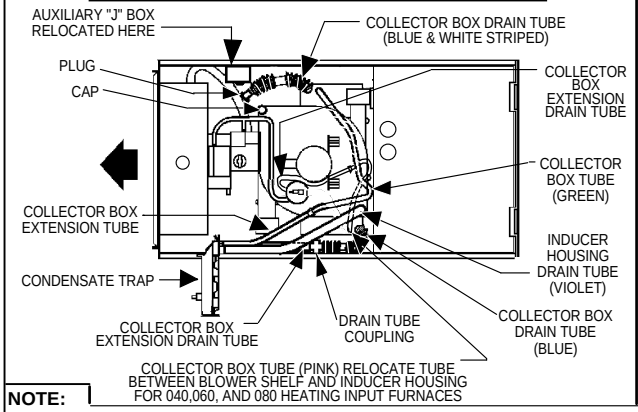

Tube location when used on HORIZONTAL - RIGHT application

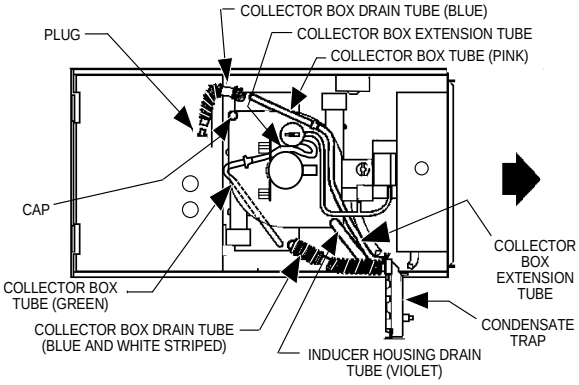

NOTE:

1. All tubing must be connected securely and routed to avoid kinks and traps.
2. Pressure tubing must always slope away from pressure switch to collector box connection as shown.
3. HORIZONTAL-LEFT installations require the collector box pressure tube to be relocated between the inducer housing and the blower shelf to prevent a trap. Refer to the Installation Instructions for further details.

322593-101 REV. A

A96212

Fig. 8—Furnace Pressure and Drain Tubing Diagram

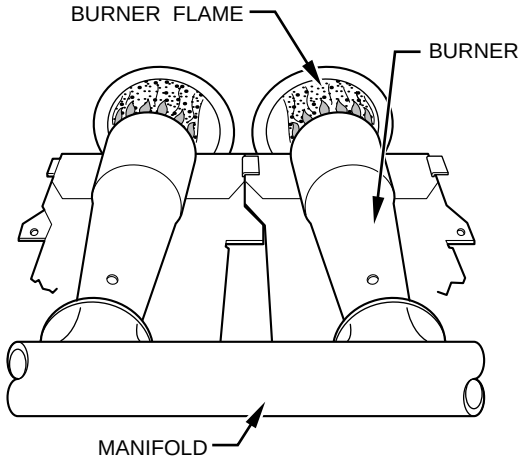

A89020

Fig. 9—Burner Flame

8. Flush inside of collector box with water until discharge from condensate trap is clean and runs freely.

NOTE: Ensure the drain tube disconnected from the inducer housing is higher than the collector box opening or water will flow out tube.

9. Inspect inside area of collector box for any pieces of foreign materials and remove if present.

> ⚠ **CAUTION:** DO NOT use wire brush or other sharp object to inspect or dislodge materials in secondary heat exchangers as failure of the secondary heat exchanger will occur. Flush with water only.

10. Reassemble inducer assembly by reversing items 5 through 7.

NOTE: If seal between the inducer housing and the collector box is damaged in any way, it must be repaired. To repair, apply sealant releasing agent such as PAM cooking spray or equivalent (must not contain corn or canola oil, aromatic or halogenated hydrocarbons) to inducer housing. (See Fig. 10.) Apply a small bead of G.E. RTV 162, G.E. RTV 6702, or Dow-Corning RTV 738 sealant to groove in collector box.

11. Refer to furnace wiring diagram and reconnect wires to inducer motor and pressure switch or connectors.
12. Reconnect pressure tubes to pressure switch. See diagram on main furnace door for proper location of tubes. Be sure tubes are not kinked. (See Fig. 8.)
13. Turn on gas and electrical supplies to furnace.
14. Check furnace operation through 2 complete heat operating cycles. Check area below inducer housing, vent pipe, and condensate trap to ensure no condensate leaks occur. If leaks are found, correct the problem.
15. Check for gas leaks.

> ⚠ **WARNING:** Never use matches, candles, flame, or other sources of ignition to check for gas leakage. Use a soap-and-water solution. Failure to follow this warning could result in a fire, personal injury, or death.

16. Replace main furnace door.

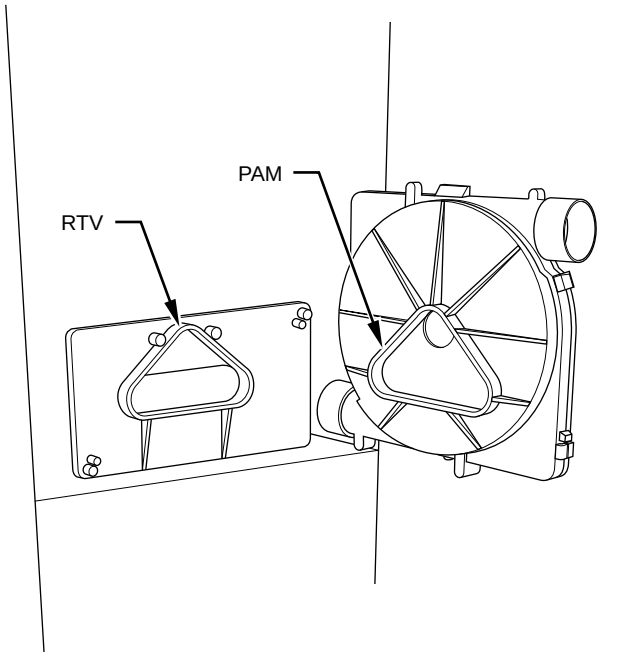

A93081

Fig. 10—Gasket on Collector Box

VI. SERVICING HOT SURFACE IGNITOR

The ignitor does NOT require annual inspection. Check ignitor resistance before removal.

1. Turn off gas and electrical supplies to furnace.
2. Remove main furnace door.
3. Disconnect ignitor wire connection.
4. Check ignitor resistance.
   a. Using an ohm meter, check resistance across both ignitor leads in connector.
   b. Cold reading should be between 45 ohms and 90 ohms.
   c. If ohm reading is higher than 110 ohms, ignitor is cracked and must be replaced.
5. Remove ignitor assembly.

> ⚠ **CAUTION:** Allow ignitor to cool before removal. Normal operation temperatures exceed 2000°F.

   a. Do not remove ignitor from retainer while assembly is in furnace. Using a small pocket straight-blade screwdriver, slowly pry 1 edge of the spring retainer from burner box housing. While working ignitor assembly loose, grasp white ceramic block to wiggle assembly (ignitor and retainer) from its location.

> ⚠ **CAUTION:** The ignitor is fragile. DO NOT allow it to hit the side of the burner box opening while removing or replacing it.

   b. Inspect ignitor for a white area indicating a crack may be present. If found, replace ignitor.

NOTE: A small crack cannot be seen on a new ignitor. After a period of operation, a white area will be visible around the crack.

   c. If replacement is required, replace ignitor on ignitor retainer external to furnace to avoid damage as the silicon portion is very brittle and will easily crack or shatter.

d. To remove ignitor from ignitor retainer, apply pressure on bottom/side clips to release pressure on ignitor ceramic block. Slowly work ceramic block out of spring retainer.

6. To replace ignitor/ignitor assembly, reverse items 5a through 5d. (See Fig. 11.)

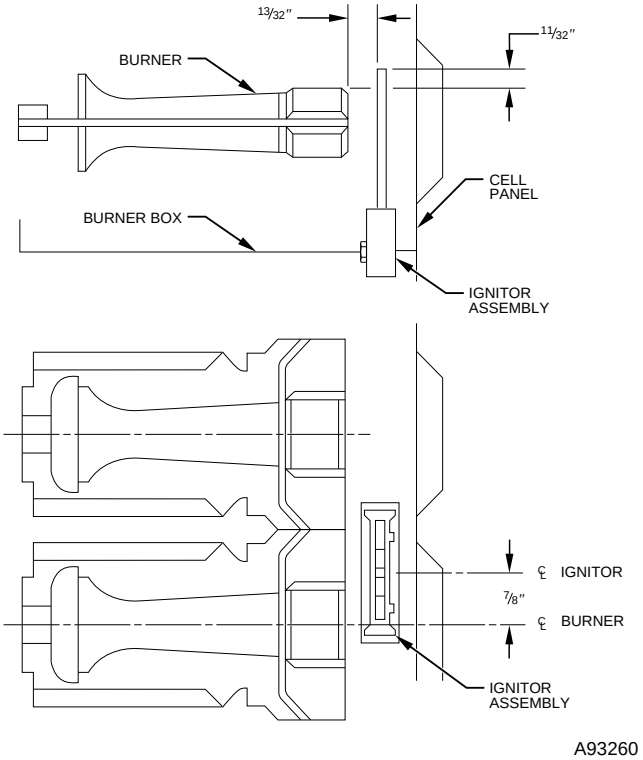

Fig. 11—Hot Surface Ignitor Location and Burner Assembly

7. Reconnect ignitor wire connection.
8. Turn on gas and electrical supplies to furnace.
9. Verify ignitor operation by initiating control board self-test feature or by cycling thermostat.
10. Replace main furnace door.

VII. ELECTRICAL CONTROLS AND WIRING

> ⚠ **CAUTION:** There may be more than 1 electrical supply to the unit. Check accessories and cooling unit for additional electrical supplies.

The electrical ground and polarity for 115-v wiring must be maintained properly. Refer to Fig. 12 for field wiring information and to Fig. 16 for unit wiring information.

NOTE: If the polarity is not correct, the STATUS LED on the control center will flash rapidly and prevent the furnace from operating. The control system also requires an earth ground for proper operation of the control center and flame sensing.

The 24-v circuit contains an automotive-type, 3-amp fuse located on the control center. (See Fig. 13.) Any direct shorts of the 24-v wiring during installation, service, or maintenance will cause this fuse to blow. If fuse replacement is required, use ONLY a fuse of identical size.

With power to the unit disconnected, check all electrical connections for tightness. Tighten all screws on electrical connections. If any smoky or burned connections are found, disassemble the connection, clean all parts, strip wire, and reassemble properly and securely.

Reconnect electrical supply to unit and observe unit through 1 complete operating cycle. Electrical controls are difficult to check without proper instrumentation; if there are any discrepancies in the operating cycle, contact your dealer and request service.

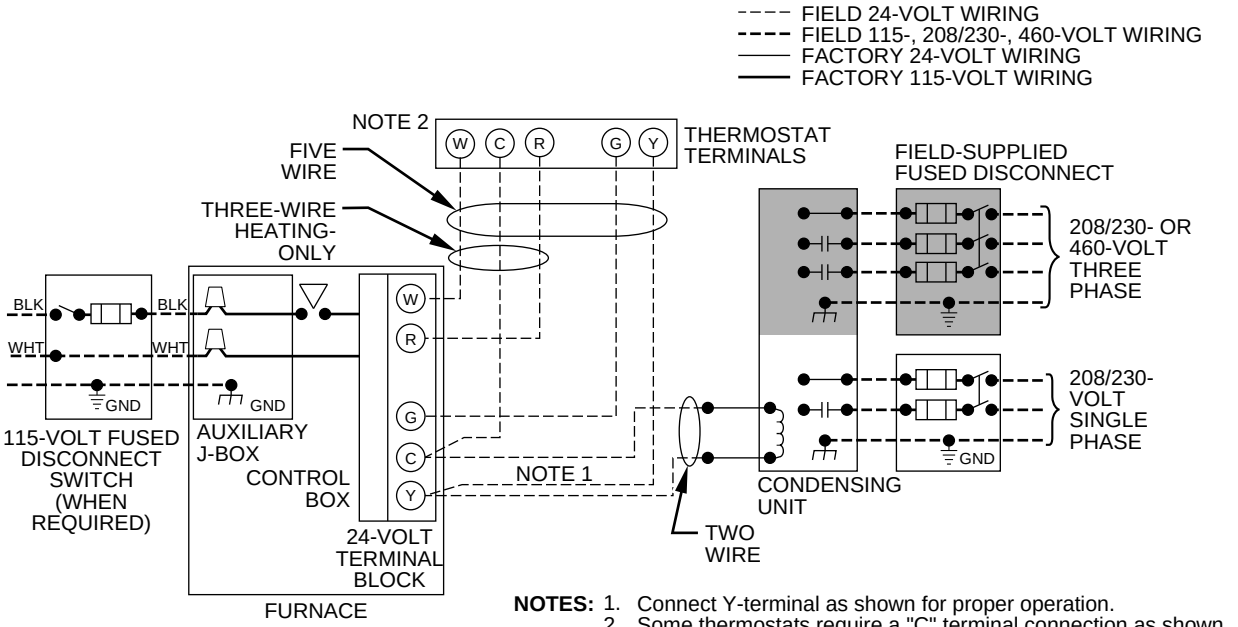

NOTES: 1. Connect Y-terminal as shown for proper operation.
2. Some thermostats require a "C" terminal connection as shown.
3. If any of the original wire, as supplied, must be replaced, use same type or equivalent wire.

A96415

→ **Fig. 12—Field Wiring**

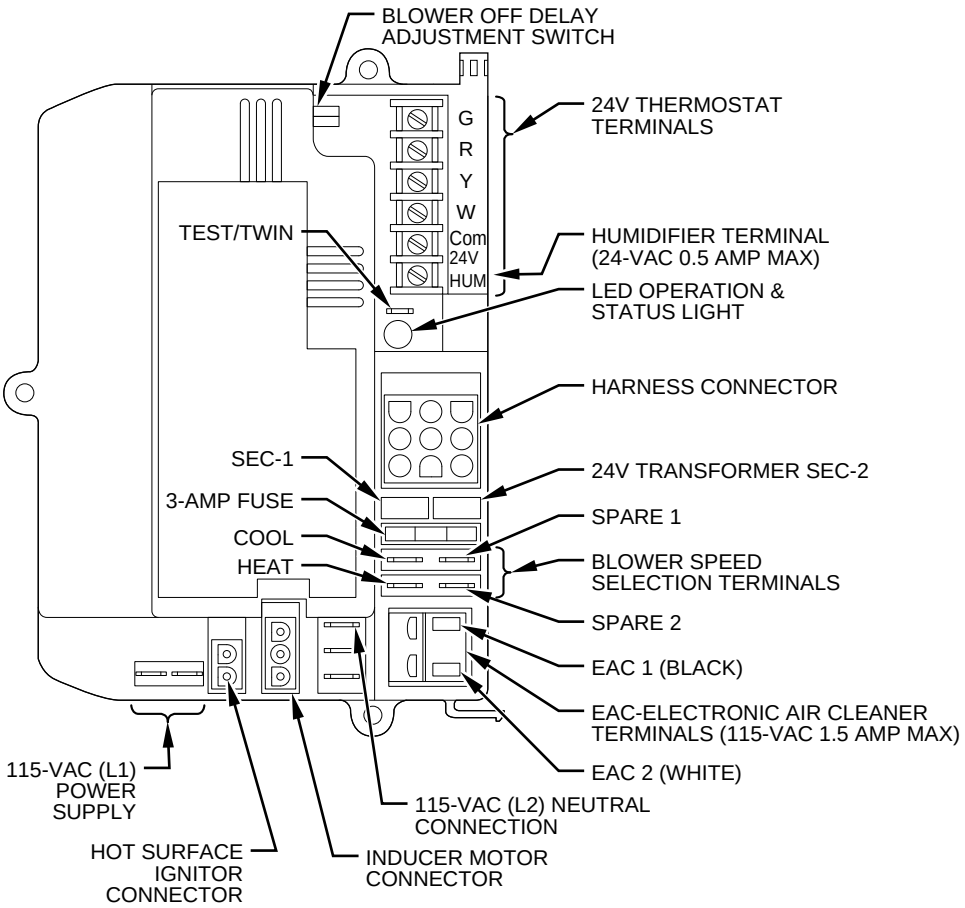

Fig. 13—Control Center

VIII. TROUBLESHOOTING

For an explanation of status codes, refer to service label located on back of main furnace door or Fig. 17, and the Troubleshooting Guide.

The control center stores 1 status code (representing the last fault to occur) for a period of 48 hr or until the 115- or 24-v power is interrupted.

NOTE: Removing blower access panel will open blower access panel door switch and terminate 115-v power to control center. The status code will be erased. Look into blower access panel sight glass for current LED status BEFORE removing blower access panel.

The unit's component test is a useful troubleshooting tool since it displays the current status code of the furnace and functionally operates all furnace components except the gas valve. The component test and methods to initiate it are described below.

A. Component Test Sequence

NOTE: All components are functionally operated except the gas valve.

When component test is initiated, the following sequence of events occurs:

1. LED flashes a status code 4 times.
2. Inducer motor starts and continues to run for remainder of component test.
3. Hot surface ignitor is energized for 15 sec, then de-energized.
4. Main blower operates at cooling speed for 10 sec, then turns off.
5. Main blower operates at heating speed for 10 sec, then turns off.
6. Inducer motor stops.

Component test can be initiated by one of the following procedures.

B. Initiating Component Test and Retrieving Status Code By Removing Main Limit Switch Wire

NOTE: NO thermostat signal may be present at control center and all blower time delay off periods must be completed.

1. Leave 115-v power to furnace turned on.
2. Remove main furnace door.
3. Look into blower access panel sight glass for current LED status.

NOTE: Leave blower access panel installed to maintain power to control center to view current LED status.

4. BRIEFLY remove either wire from the main limit switch until the LED goes out, then reconnect it.

> ⚠ **CAUTION:** Make sure limit switch wire does not contact any metallic component such as the gas valve. If wire is shorted, 3-amp fuse on control center will blow.

NOTE: If wire to main limit is disconnected longer than 4 sec, the control senses limit circuit is open. Main blower will start and retrieval request will be ignored.

5. When above items have been completed, the component test sequence will occur as described in the Component Test Sequence section above.

NOTE: Be sure to record the status code which is flashed 4 times at start of component test for further troubleshooting.

6. After component test is completed and LED is ON continuously indicating the furnace is ready to operate when a signal from the thermostat is received, replace main furnace door.

C. Initiating Component Test and Retrieving Status Code By Jumpering Control TEST Terminal

1. Remove main furnace door.
2. Remove blower access panel.
3. Manually close blower access panel door switch. Use a piece of tape to hold switch closed.

> ⚠ **WARNING:** Blower access panel door switch opens 115-v power to control center. No component operation can occur. Caution must be taken when manually closing this switch for service purposes. Failure to follow this warning could result in electrical shock, personal injury, or death.

4. BRIEFLY short (jumper) TEST, 1/4-in. quick-connect terminal on control center (adjacent to the LED diagnostic light) and the COM terminal on thermostat connection block. (See Fig. 13.)

NOTE: If TEST to COM terminals are jumpered longer than 2 sec, LED will flash rapidly, and retrieval request will be ignored.

5. When above items have been completed, the component test sequence will occur as described in the Component Test Sequence section above.

NOTE: Be sure to record the status code which is flashed 4 times at start of component test for further troubleshooting.

6. After component test is completed and furnace is operating properly, release blower access panel door switch, replace blower access panel, and replace main furnace door.

IX. CHECKING HEAT TAPE OPERATION (IF APPLICABLE)

In applications where the ambient temperature around the furnace is 32°F or lower, freeze protection measures are required. If this application is where heat tape has been applied, check to ensure it will operate when low temperatures are present.

NOTE: Heat tape, when used, should be wrapped around the condensate drain trap and drain line. There is no need to use heat tape within the furnace casing. Most heat tapes are temperature activated, and it is not practical to verify the actual heating of the tape. Check the following:

1. Check for signs of physical damage to heat tape such as nicks, cuts, abrasions, gnawing by animals, etc.
2. Check for discolored heat tape insulation. If any damage or discolored insulation is evident, replace heat tape.
3. Check that heat tape power supply circuit is on.

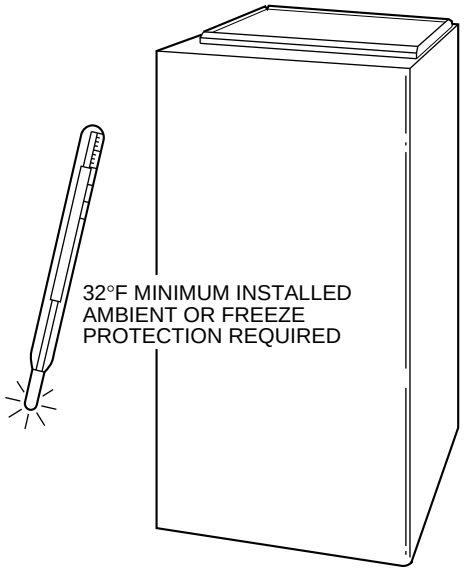

A93058

> ⚠ **CAUTION:** If this furnace is installed in an unconditioned space where the ambient temperatures may be 32°F or lower, freeze protection measures must be taken.

X. WINTERIZING

> ⚠ **CAUTION:** Freezing condensate left in the furnace will damage the equipment.

If the furnace will be off for an extended period of time in a structure where the temperature will drop to 32°F or below, winterize as follows:

1. Turn off electrical supply to furnace.
2. Remove main furnace door.
3. Disconnect drain tube from inducer housing. (See Fig. 14.)
4. Insert funnel in drain tube and pour antifreeze, propylene glycol (RV, swimming pool antifreeze, or equivalent) into furnace until it is visible at point where condensate enters open drain. (See Fig. 15.)
5. Reconnect drain tube to inducer housing.
6. Replace main furnace door.

> ⚠ **CAUTION:** Do not use ethylene glycol (Prestone II antifreeze/coolant or equivalent automotive type). Failure of plastic components will occur.

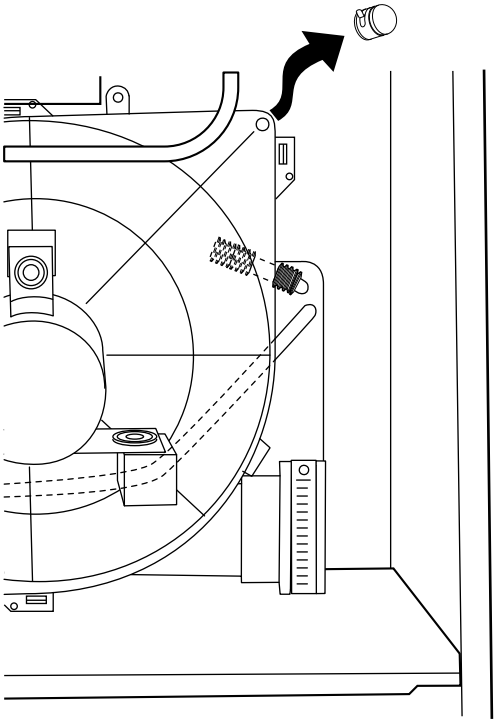

A94208

Fig. 14—Inducer Housing Drain Tube

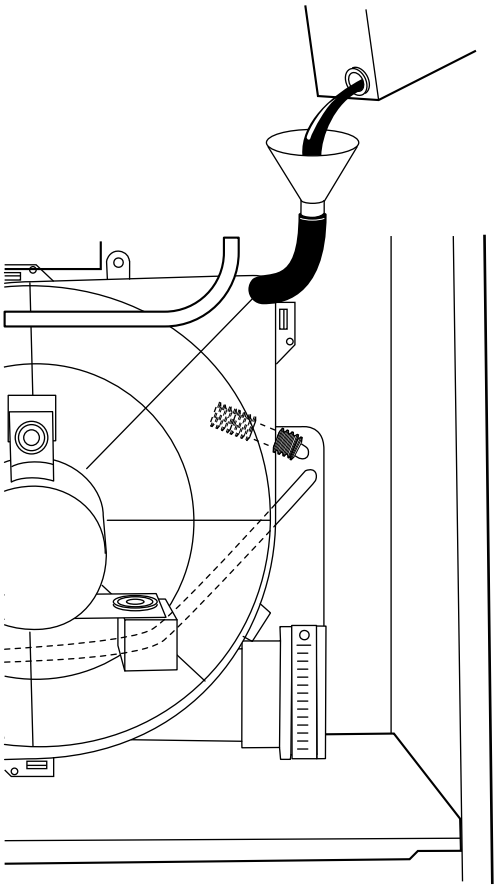

A94209

Fig. 15—Funnel in Drain and Antifreeze Running Through Trap

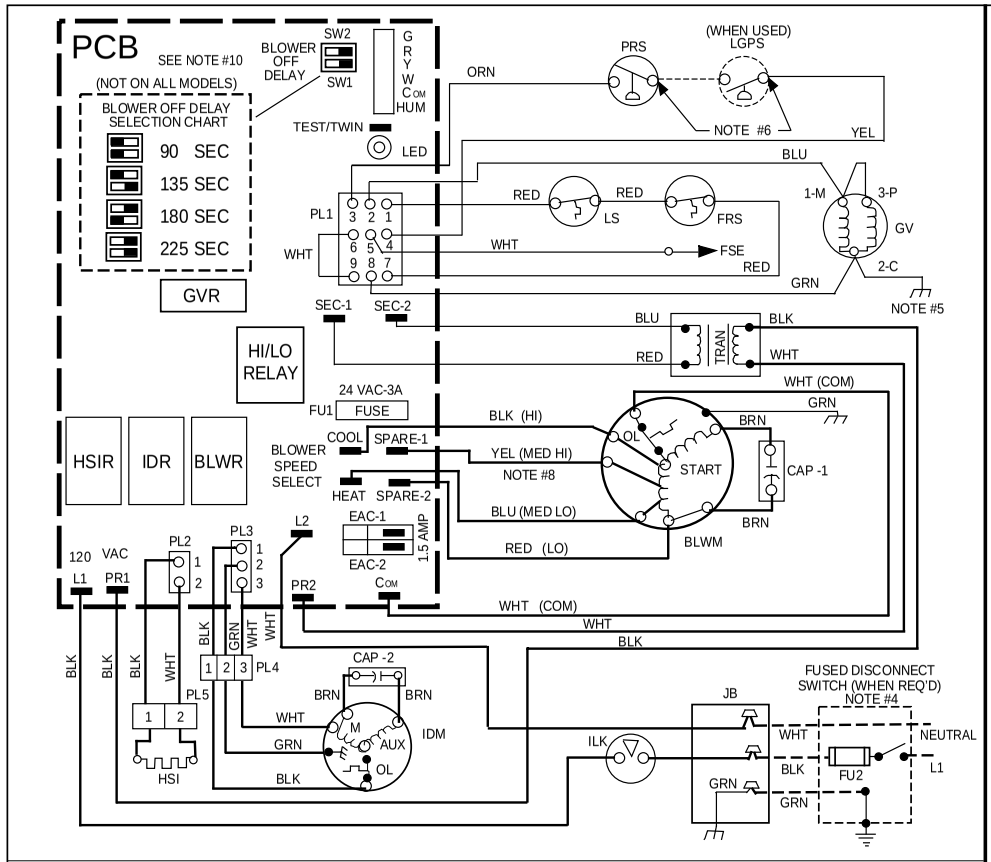

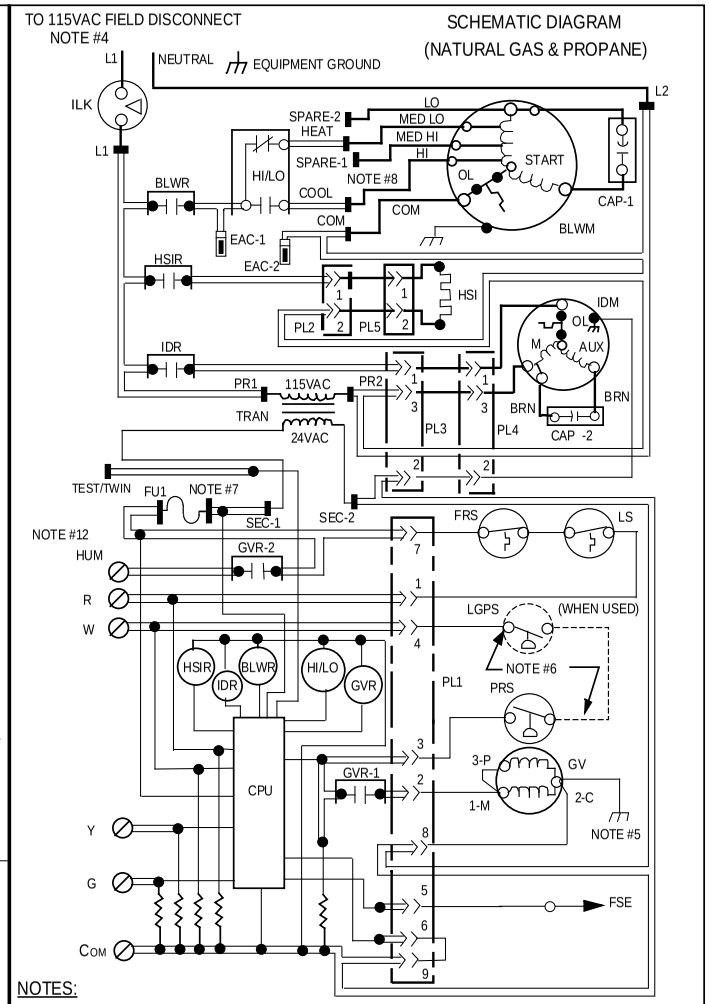

LEGEND

BLWR	BLOWER MOTOR RELAY, SPST-(N.O.)
BLWM	BLOWER MOTOR
CAP	CAPACITOR
CPU	MICROPROCESSOR AND CIRCUITRY
EAC-1	ELECTRONIC AIR CLEANER CONNECTION (115 VAC 1.5 AMP MAX.)
EAC-2	ELECTRONIC AIR CLEANER CONNECTION (COMMON)
FRS	FLAME ROLLOUT SW. -MANUAL RESET, SPST-(N.C.)
FSE	FLAME PROVING ELECTRODE
FU1	FUSE, 3 AMP, AUTOMOTIVE BLADE TYPE, FACTORY INSTALLED
FU2	FUSE OR CIRCUIT BREAKER CURRENT INTERRUPT DEVICE (FIELD INSTALLED & SUPPLIED)
GV	GAS VALVE-REDUNDANT OPERATORS
GVR	GAS VALVE RELAY, DPST-(N.O.)
HI/LO	BLOWER MOTOR SPEED CHANGE RELAY, SPDT
HSI	HOT SURFACE IGNITOR (115 VAC)
HSIR	HOT SURFACE IGNITOR RELAY, SPST-(N.O.)
HUM	24VAC HUMIDIFIER CONNECTION (.5 AMP. MAX.)
IDM	INDUCED DRAFT MOTOR
IDR	INDUCED DRAFT RELAY, SPST-(N.O.)
ILK	BLOWER ACCESS PANEL INTERLOCK SWITCH, SPST-(N.O.)
JB	JUNCTION BOX
LED	LIGHT-EMITTING DIODE FOR STATUS CODES
LGPS	LOW GAS PRESSURE SWITCH, SPST-(N.O.)
LS	LIMIT SWITCH, AUTO RESET, SPST(N.C.)
OL	AUTO-RESET INTERNAL MOTOR OVERLOAD TEMP. SW.
PCB	PRINTED CIRCUIT BOARD
PL1	9-CIRCUIT CONNECTOR
PL2	2-CIRCUIT PCB CONNECTOR
PL3	3-CIRCUIT IDM CONNECTOR
PL4	3-CIRCUIT IDM EXTENSION CONNECTOR
PL5	2-CIRCUIT HSI/PCB CONNECTOR
PRS	PRESSURE SWITCH, SPST-(N.O.)
SW1 & 2	BLOWER OFF DELAY
TEST/TWIN	COMPONENT TEST & TWIN TERMINAL
TRAN	TRANSFORMER-115VAC/24VAC
	JUNCTION
	UNMARKED TERMINAL
	PCB TERMINAL
	FACTORY WIRING (115VAC)
	FACTORY WIRING (24VAC)
	FIELD WIRING (115VAC)
	FIELD WIRING (24VAC)
	CONDUCTOR ON PCB
	FIELD WIRING TERMINAL
	FIELD GROUND
	EQUIPMENT GROUND
	FIELD SPLICE
	PLUG RECEPTACLE

NOTES:

1. IF ANY OF THE ORIGINAL EQUIPMENT WIRE IS REPLACED USE WIRE RATED FOR 105°C.
2. INDUCER (IDM) AND BLOWER (BLWM) MOTORS CONTAIN INTERNAL AUTO-RESET THERMAL OVERLOAD SWITCHES (OL).
3. BLOWER MOTOR SPEED SELECTIONS ARE FOR AVERAGE CONDITIONS, SEE INSTALLATION INSTRUCTIONS FOR DETAILS ON OPTIMUM SPEED SELECTION.
4. USE ONLY COPPER WIRE BETWEEN THE DISCONNECT SWITCH AND THE FURNACE JUNCTION BOX (JB).
5. THIS WIRE MUST BE CONNECTED TO FURNACE SHEETMETAL FOR CONTROL TO PROVE FLAME.
6. FACTORY CONNECTED WHEN LGPS NOT USED.
7. REPLACE ONLY WITH A 3 AMP FUSE.
8. YELLOW LEAD NOT ON ALL MOTORS.
9. BLOWER-ON DELAY, GAS HEATING 60 SECONDS, COOLING OR HEAT PUMP 2 SECONDS.
10. BLOWER-OFF DELAY, GAS HEATING 90, 135, 180 OR 225 SECONDS, COOLING OR HEAT PUMP 90 SECONDS. (135 SECONDS ONLY ON SOME MODELS)
11. IGNITION-LOCKOUT WILL OCCUR AFTER FOUR CONSECUTIVE UNSUCCESSFUL TRIALS-FOR-IGNITION. CONTROL WILL AUTO-RESET AFTER THREE HOURS.
12. SOME MODELS MAY HAVE SPADE QUICK CONNECT TERMINALS.

322854-101 REV. C

A95087

Fig. 16—Wiring Diagram

SERVICE

LED CODE	STATUS
CONTINUOUS OFF -	Check for 115VAC at L1 and L2, and 24VAC at SEC-1 and SEC-2.
CONTINUOUS ON -	Control has 24V power.
RAPID FLASHING -	Line voltage (115V) polarity reversed. If twinned, refer to twinning kit instructions.

EACH OF THE FOLLOWING STATUS CODES IS A TWO DIGIT NUMBER WITH THE FIRST DIGIT DETERMINED BY THE NUMBER OF SHORT FLASHES AND THE SECOND DIGIT BY THE NUMBER OF LONG FLASHES.

11 **NO PREVIOUS CODE** - Stored status codes are erased when power (115V or 24V) to control is interrupted or 48 hours after each fault is cleared.

12 **BLOWER ON AFTER POWER UP (115V or 24V)** - Blower runs for 90 seconds, if unit is powered up during a call for heat (R-W closed).

13 **LIMIT OR FLAME ROLL-OUT SWITCH LOCKOUT** - Auto reset after three hours. For flame roll-out switch or fuse link, refer to #33.

14 **IGNITION LOCKOUT -** Control will auto-reset after three hours. Refer to #34.

21 **GAS HEATING LOCKOUT** - Control will NOT auto reset.
Check for: - Stuck gas valve relay on control or miswire to gas valve circuit.

22 **ABNORMAL FLAME-PROVING SIGNAL** - Flame is proved while gas valve is de-energized. Inducer will run until fault is cleared. Check for:
- Stuck-open gas valve or leaky gas valve.

23 **PRESSURE SWITCH DID NOT OPEN** Check for:
- Obstructed pressure tubing.
- Defective pressure switch (stuck closed).

24 **SECONDARY VOLTAGE FUSE IS OPEN**
Check for: - Short circuit in secondary voltage (24V) wiring.

31 **PRESSURE, DRAFT SAFEGUARD, AUXILIARY-LIMIT (when used), OR BLOCKED VENT SHUTOFF (when used) SWITCH DID NOT CLOSE OR REOPENED -** If open longer than five minutes, inducer shuts off for 15 minutes before retry. Check for:
- Proper vent sizing and condensate pitch or sag.
- Vent restriction or high winds.
- Defective inducer motor or start capacitor.
- Inadequate Combustion air supply.
- Low inducer voltage.
- Disconnected or obstructed pressure tubing.
- Defective pressure switch or connections. If it opens after trial for ignition period, blower will come on for 90 second recycle delay.

33 **LIMIT OR FLAME ROLL-OUT SWITCH IS OPEN** - If open longer than three minutes,code changes to #13. Check for:
- Defective blower motor or start capacitor.
- Loose blower wheel.
- Dirty filter or restricted duct system.
- Defective switch or connections.
- Inadequate Combustion air supply Flame Roll-out Switch or fuse link.
- Open Flame Roll-out switch,or fuse link. Manual reset or replace.

34 **IGNITION PROVING FAILURE** - Control will try three more times before a lockout #14 occurs. If flame signal lost after trial for ignition period, blower will come on for 90 second recycle delay. Check for:
- Oxide buildup on flame sensor (clean with fine sandpaper).
- Proper flame sense microamps (.5 microamps D.C. minimum).
- Gas valve turned off. - Manual shut-off valve. - Low inlet gas pressure.
- Green wire **MUST** be connected to furnace sheet metal.
- Inadequate flame carryover or rough ignition.

COMPONENT TEST

To initiate the component test sequence,shut OFF the room thermostat or disconnect the "R" thermostat lead. Briefly short the TEST terminal to the 'Com 24V' terminal. Status LED will flash code and then turn ON the inducer motor. The inducer motor will run for the entire component test. The hot surface ignitor, blower motor-heat speed, and blower motor-cool speed will be turned ON for 10-15 seconds each.

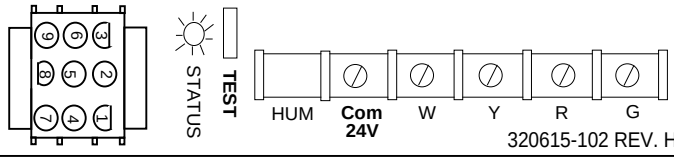

320615-102 REV. H

A96263

→ **Fig. 17—Service Label**

Troubleshooting Guide

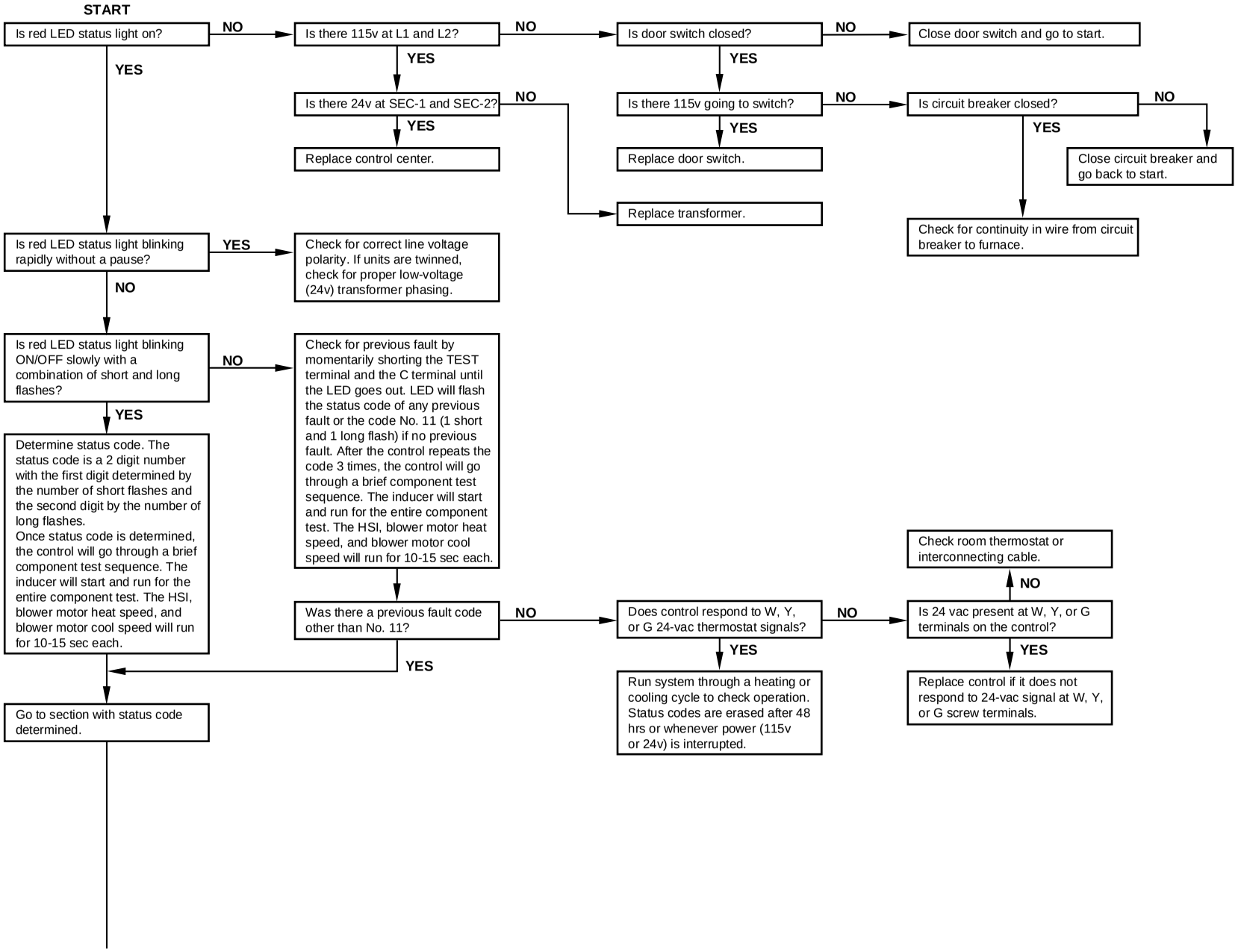

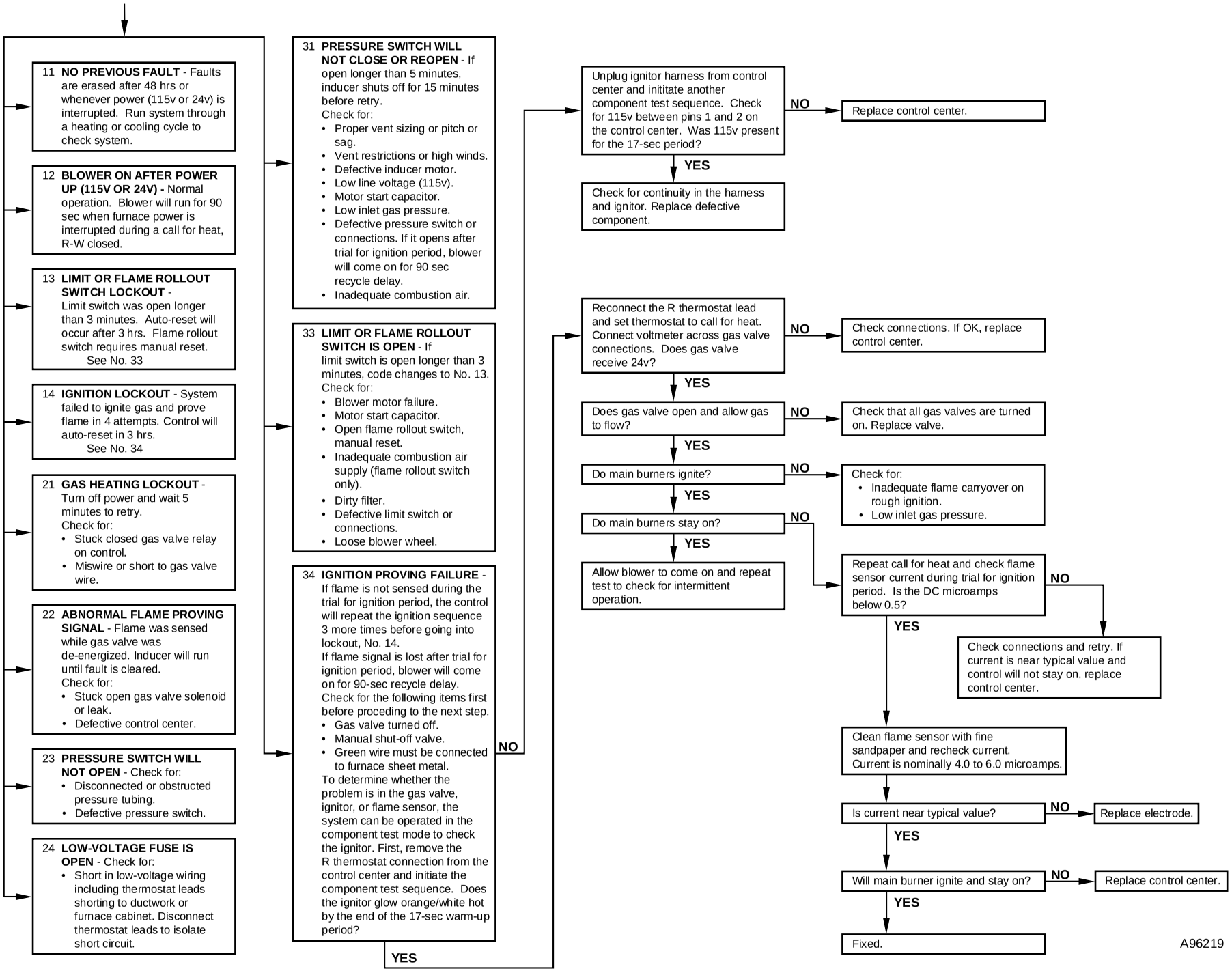
11 NO PREVIOUS FAULT - Faults are erased after 48 hrs or whenever power (115v or 24v) is interrupted. Run system through a heating or cooling cycle to check system.
12 BLOWER ON AFTER POWER UP (115V OR 24V) - Normal operation. Blower will run for 90 sec when furnace power is interrupted during a call for heat, R-W closed.
13 LIMIT OR FLAME ROLLOUT SWITCH LOCKOUT - Limit switch was open longer than 3 minutes. Auto-reset will occur after 3 hrs. Flame rollout switch requires manual reset. See No. 33
14 IGNITION LOCKOUT - System failed to ignite gas and prove flame in 4 attempts. Control will auto-reset in 3 hrs. See No. 34
21 GAS HEATING LOCKOUT - Turn off power and wait 5 minutes to retry. Check for: • Stuck closed gas valve relay on control. • Miswire or short to gas valve wire.
22 ABNORMAL FLAME PROVING SIGNAL - Flame was sensed while gas valve was de-energized. Inducer will run until fault is cleared. Check for: • Stuck open gas valve solenoid or leak. • Defective control center.
23 PRESSURE SWITCH WILL NOT OPEN - Check for: • Disconnected or obstructed pressure tubing. • Defective pressure switch.
24 LOW-VOLTAGE FUSE IS OPEN - Check for: • Short in low-voltage wiring including thermostat leads shorting to ductwork or furnace cabinet. Disconnect thermostat leads to isolate short circuit.
31 PRESSURE SWITCH WILL NOT CLOSE OR REOPEN - If open longer than 5 minutes, inducer shuts off for 15 minutes before retry. Check for: • Proper vent sizing or pitch or sag. • Vent restrictions or high winds. • Defective inducer motor. • Low line voltage (115v). • Motor start capacitor. • Low inlet gas pressure. • Defective pressure switch or connections. If it opens after trial for ignition period, blower will come on for 90 sec recycle delay. • Inadequate combustion air.
33 LIMIT OR FLAME ROLLOUT SWITCH IS OPEN - If limit switch is open longer than 3 minutes, code changes to No. 13. Check for: • Blower motor failure. • Motor start capacitor. • Open flame rollout switch, manual reset. • Inadequate combustion air supply (flame rollout switch only). • Dirty filter. • Defective limit switch or connections. • Loose blower wheel.
34 IGNITION PROVING FAILURE - If flame is not sensed during the trial for ignition period, the control will repeat the ignition sequence 3 more times before going into lockout, No. 14. If flame signal is lost after trial for ignition period, blower will come on for 90-sec recycle delay. Check for the following items first before proceding to the next step. • Gas valve turned off. • Manual shut-off valve. • Green wire must be connected to furnace sheet metal. To determine whether the problem is in the gas valve, ignitor, or flame sensor, the system can be operated in the component test mode to check the ignitor. First, remove the R thermostat connection from the control center and initiate the component test sequence. Does the ignitor glow orange/white hot by the end of the 17-sec warm-up period?
NO
YES
Unplug ignitor harness from control center and inititate another component test sequence. Check for 115v between pins 1 and 2 on the control center. Was 115v present for the 17-sec period?
NO
Replace control center.
YES
Check for continuity in the harness and ignitor. Replace defective component.
Reconnect the R thermostat lead and set thermostat to call for heat. Connect voltmeter across gas valve connections. Does gas valve receive 24v?
NO
Check connections. If OK, replace control center.
YES
Does gas valve open and allow gas to flow?
NO
Check that all gas valves are turned on. Replace valve.
YES
Do main burners ignite?
NO
Check for: • Inadequate flame carryover on rough ignition. • Low inlet gas pressure.
YES
Do main burners stay on?
NO
YES
Allow blower to come on and repeat test to check for intermittent operation.
Repeat call for heat and check flame sensor current during trial for ignition period. Is the DC microamps below 0.5?
NO
Check connections and retry. If current is near typical value and control will not stay on, replace control center.
YES
Clean flame sensor with fine sandpaper and recheck current. Current is nominally 4.0 to 6.0 microamps.
Is current near typical value?
NO
Replace electrode.
YES
Will main burner ignite and stay on?
NO
Replace control center.
YES
Fixed.
A96219

SERVICE TRAINING

Packaged Service Training programs are an excellent way to increase your knowledge of the equipment discussed in this manual, including:

- Unit Familiarization
- Maintenance
- Installation Overview
- Operating Sequence

A large selection of product, theory, and skills programs is available, using popular video-based formats and materials. All include video and/or slides, plus companion book.

Classroom Service Training plus "hands-on" the products in our labs can mean increased confidence that really pays dividends in faster troubleshooting, fewer callbacks. Course descriptions and schedules are in our catalog.

CALL FOR FREE CATALOG 1-800-962-9212

[ ] Packaged Service Training [ ] Classroom Service Training

A94328