38MHRC
Outdoor Unit Single Zone Ductless System
Sizes 09 to 36

Product Data

Fig. 1 — Sizes 9K - 24K

NOTE: Images are for illustration purposes **only**. Actual models may differ slightly.

TABLE OF CONTENTS

PAGE

INDUSTRY LEADING FEATURES / BENEFITS 1
MODEL NUMBER NOMENCLATURE 3
STANDARD FEATURES AND ACCESSORIES 4
DIMENSIONS - HEAT PUMP 5
DIMENSIONS - COOLING ONLY 5
CLEARANCES 13
SPECIFICATIONS - HEAT PUMP 14
SPECIFICATIONS - COOLING ONLY 15
SYSTEM PERFORMANCE - HEAT PUMP 16
SYSTEM PERFORMANCE - COOLING ONLY 16
COMPRESSOR SPECIFICATIONS - HEAT PUMP 17
COMPRESSOR SPECIFICATIONS - COOLING ONLY 17
REFRIGERANT COIL SPECIFICATIONS - HEAT PUMP 18
REFRIGERANT COIL SPECIFICATIONS - COOLING ONLY . 19
PIPING AND REFRIGERANT - HEAT PUMP 20
PIPING AND REFRIGERANT - COOLING ONLY 20
COOLING PERFORMANCE DATA - HEAT PUMP 21
COOLING PERFORMANCE DATA - COOLING ONLY 23
HEATING PERFORMANCE DATA - HEAT PUMP 24
APPLICATION DATA 26
WIRING 28
ELECTRICAL DATA - HEAT PUMP 30
ELECTRICAL DATA - COOLING ONLY 30
WIRING DIAGRAMS 32
GUIDE SPECIFICATIONS 38

INDUSTRY LEADING FEATURES / BENEFITS

A PERFECT BALANCE BETWEEN BUDGET LIMITS, ENERGY SAVINGS AND COMFORT.

The **38MHRC** series ductless systems are a matched combination of an outdoor condensing unit and an indoor fan coil unit connected only by refrigerant tubing and wires.

The ductless system permits creative solutions to design problems such as:

- Add-ons to current space (an office or family room addition)
- Special space requirements
- When changes in the load cannot be handled by the existing system
- When adding air conditioning to spaces that are heated by hydronic or electric heat and have no ductwork
- Historical renovations or any application where preserving the look of the original structure is essential.

The ideal compliment to your ducted system when it is impractical or prohibitively expensive to use ductwork.

The compact indoor fan coil units take up very little space in the room and do not obstruct windows. The fan coils are attractively styled to blend with most room decors. Advanced system components incorporate innovative technology to provide reliable cooling performance at low sound levels.

Inverter Technology

The inverter driven compressor is designed to run at various input power frequencies (Hz) which controls the compressor's motor speed.

Even Temperature – The control package, including the inverter, monitors the outdoor and indoor temperatures as they relate to the selected indoor set point and adjusts the compressor speed to match the load and keep the system operating continuously rather than cycling and creating temperature swings. This translates to higher comfort levels for the occupants.

Rapid Pull Down/Warm-Up – Comfort is increased by the inverter system's ability to ramp up the compressor speed enabling the system to reach the user selected room temperature set point quicker.

Humidity Control – Running the system for longer periods and continuously varying the compressor speed enhances the humidity control.

Individual Room Comfort

Maximum comfort is provided because each space can be controlled individually based on the usage pattern.

Low Sound Levels

When noise is a concern, ductless systems are the answer. The indoor units are whisper quiet. There are no compressors indoors, either in the conditioned space or directly over it, and there is none of the noise usually generated by air being forced through the ductwork.

When sound ordinances and proximity to neighbors demand quiet operation, the **38MHRC** unit is the right choice. With the inverter technology, these units run at lower speeds most of the time resulting in reduced sound levels.

Inverter Technology – Enhanced Economical Operation

Ductless systems are inherently economical to operate. Individual rooms are heated or cooled only when required, and since the air is delivered directly to the space, there is no need to use additional energy to move the air in the ductwork. This economical operation is enhanced further when the inverter system output matches the load resulting in a more efficient system.

Easy-To-Use Controls

The systems have microprocessor-based controls to provide the ultimate in comfort and efficiency. The user friendly wired and wireless remote controls provide the interface between the user and the unit.

Secure Operation

If security is an issue, outdoor and indoor units are connected only by refrigerant piping and wiring to prevent intruders from crawling through ductwork or wall openings. In addition, since the **38MHRC** can be installed close to an outside wall, coils are protected from vandals and severe weather.

Fast Installation

This compact ductless system is simple to install. Only wires and piping need to run between the indoor and outdoor units. These units are fast and easy to install ensuring minimal disruption to customers in homes or the workplace. This makes the **38MHRC** systems the equipment of choice for retrofit applications.

Simple Servicing and Maintenance

Removing the top panel of the outdoor unit provides immediate access to the control compartment, providing the service technician access to the diagnostic LEDs to facilitate the troubleshooting process. In addition, the draw-thru design of the outdoor unit means that dirt accumulates on the outside surface of the coil. Coils can be cleaned quickly from the inside using a pressure hose and detergent.

On the indoor units, service and maintenance expense is reduced due to the permanent easy to clean filters. Also, error codes are displayed on the front panel to alert the user to certain system malfunctions.

Built-in Reliability

Ductless system indoor and outdoor units are designed to provide years of trouble-free operation. Both the indoor and outdoor units are well protected. Whenever the microprocessor detects abnormal conditions, the unit stops and an error code appears.

Inverter systems provide additional reliability due to the soft start.

This refers to the inverter's ability to start the compressor motor using reduced voltage and reduced current. This feature is beneficial from an electrical standpoint (eliminates current spikes) as well as an overall reliability standpoint due to reduced stress on all associated system components.

Agency Listings

All systems are listed with AHRI (Air conditioning, Heating, and Refrigeration Institute) and are UL certified per UL 60335-2-40 standard.

Manufacturer reserves the right to change, at any time, specifications and designs without notice and without obligations.

MODEL NUMBER NOMENCLATURE

OUTDOOR UNIT

38 MH R C Q 12 A A 3

38 = OUTDOOR UNIT

MH = MODEL

UNIT TYPE
R = OUTDOOR UNIT

MAJOR SERIES

SYSTEM TYPE
C = COOLING ONLY
Q = HEAT PUMP

VOLTAGE
1 = 115-1-60
3 = 208/230-1-60

VARIATIONS
A = STANDARD

MAXIMUM NUMBER OF FAN COIL UNITS THAT CAN BE CONNECTED TO THE OUTDOOR UNIT
A = 1:1

NOMINAL CAPACITY
09 - 0.75 TON
12 - 1 TON
18 - 1.5 TONS
24 - 2 TONS
30 - 2.5 TONS
36 - 3 TONS

Use of the AHRI Certified TM Mark indicates a manufacturer's participation in the program For verification of certification for individual products, go to www.ahridirectory.org.

STANDARD FEATURES AND ACCESSORIES

Ease Of Installation	
Low Voltage Controls	S
Comfort Features	
Microprocessor Controls	S
Auto Restart Function	S
Auto Changeover	S
Energy Saving Features	
Inverter Driven Compressor	S
46° F Heating Mode (Heating Setback)	S
Safety And Reliability	
3 Minute Time Delay For Compressor	S
High Compressor Discharge Temperature	S
Low Voltage Protection	S
Compressor Overload Protection	S
Compressor Over Current Protection	S
IPM Module Protection	S
Condenser High Temp Protection in Cooling Mode	S
Anti-corrosion pre-coated fins	S
Ease Of Service And Maintenance	
Diagnostics	S
Liquid Line Pressure Taps	S
Application Flexibility	
Crankcase Heater	S
Base pan Heater on Heat Pump units only	S

Legend

S - Standard
A - Accessory

Accessories - Heat Pump

Outdoor Unit Model Number	Base Pan Base Rubber Plugs RCD Part No.	Quantity per Unit
38MHRCC12AA1	12600801A00077	6
38MHRCC12AA3		6
38MHRCC18AA3		9
38MHRCC24AA3	N/A	N/A
38MHRCQ12AA1	12600801A00077	30
38MHRCQ09AA3		30
38MHRCQ12AA3		30
38MHRCQ18AA3		26
38MHRCQ24AA3		31
38MHRCQ30AA3		5
38MHRCQ36AA3		5

NOTE: The base pan is built in with multiple holes for proper draining during the defrost process. For applications where it is required to seal these holes, and re-direct the condensate drain, rubber plugs are available through RCD.

Outdoor Units

Crankcase Unit

The crankcase heater is standard on all unit sizes. Heater clamps must be placed around the compressor oil sump.

Base pan Heater

The base pan heater is standard on all unit sizes.

Manufacturer reserves the right to change, at any time, specifications and designs without notice and without obligations.

DIMENSIONS - HEAT PUMP

SYSTEM SIZE		9K (115V)	12K (115V)	9K (208/230V)	12K (208/230V)	18K (208/230V)	24K (208/230V)	30K (208/230V)	36K (208/230V)
Height (H)	in (mm)	21.85(555)	21.85(555)	21.85(555)	21.85(555)	21.81(554)	26.50(673)	31.89(810)	31.89(810)
Width (W)	in (mm)	30.12(765)	30.12(765)	30.12(765)	30.12(765)	31.69(805)	35.04(890)	37.24(946)	37.24(946)
Depth (D)	in (mm)	11.93(303)	11.93(303)	11.93(303)	11.93(303)	12.99(330)	13.46(342)	16.14(410)	16.14(410)
Weight - Net	lbs. (kg)	57.76(26.2)	62.17(28.2)	55.11(25.0)	59.30(26.9)	73.85(33.5)	97.88(44.4)	142.86(64.8)	150.13(68.1)
Packaging									
Height	in (mm)	24.02(610)	24.02(610)	24.02(610)	24.02(610)	24.21(615)	29.13(740)	34.84(885)	34.84(885)
Width	in (mm)	34.92(887)	34.92(887)	34.92(887)	34.92(887)	36.02(915)	39.17(995)	42.91(1090)	42.91(1090)
Depth	in (mm)	13.27(337)	13.27(337)	13.27(337)	13.27(337)	14.57(370)	15.67(398)	19.69(500)	19.69(500)
Weight - Gross	lbs. (kg)	63.49(28.8)	67.68(30.7)	60.85(27.6)	64.82(29.4)	79.81(36.2)	104.50(47.4)	152.56(69.2)	158.95(72.1)
Carton Material	Carton Box								
Material Thickness	in (mm)	0.197(5)	0.197(5)	0.197(5)	0.197(5)	0.197(5)	0.295(7.5)	0.295(7.5)	0.295(7.5)

DIMENSIONS - COOLING ONLY

SYSTEM SIZE		12K (115 V)	12K (208/230 V)	18K (208/230 V)	24K (208/230 V)
Unit					
Height (H)	in (mm)	19.49(495)	19.49(495)	21.85(555)	26.50(673)
Width (W)	in (mm)	28.35(720)	28.35(720)	30.12(765)	35.04(890)
Depth (D)	in (mm)	10.63(270)	10.63(270)	11.93(303)	13.46(342)
Weight -Net	lbs. (kg)	51.15(23.2)	48.72(22.1)	61.51(27.9)	97.88(44.4)
Packaging					
Height	in (mm)	21.26(540)	21.26(540)	24.02(610)	29.13(740)
Width	in (mm)	32.87(835)	32.87(835)	34.92(887)	39.17(995)
Depth	in (mm)	11.81(300)	11.81(300)	13.27(337)	15.67(398)
Weight-Gross	lbs. (kg)	55.11(25)	52.1(23.9)	66.8(30.3)	104.50(47.4)
Carton Drawing No.	--	818*288*520	818*288*520	877*327*590	985*388*720
Carton Material	--	Carton Box			
Material Thickness	in (mm)	0.197(5)	0.197(5)	0.197(5)	0.295(7.5)

Manufacturer reserves the right to change, at any time, specifications and designs without notice and without obligations.

DIMENSIONS (CONT)

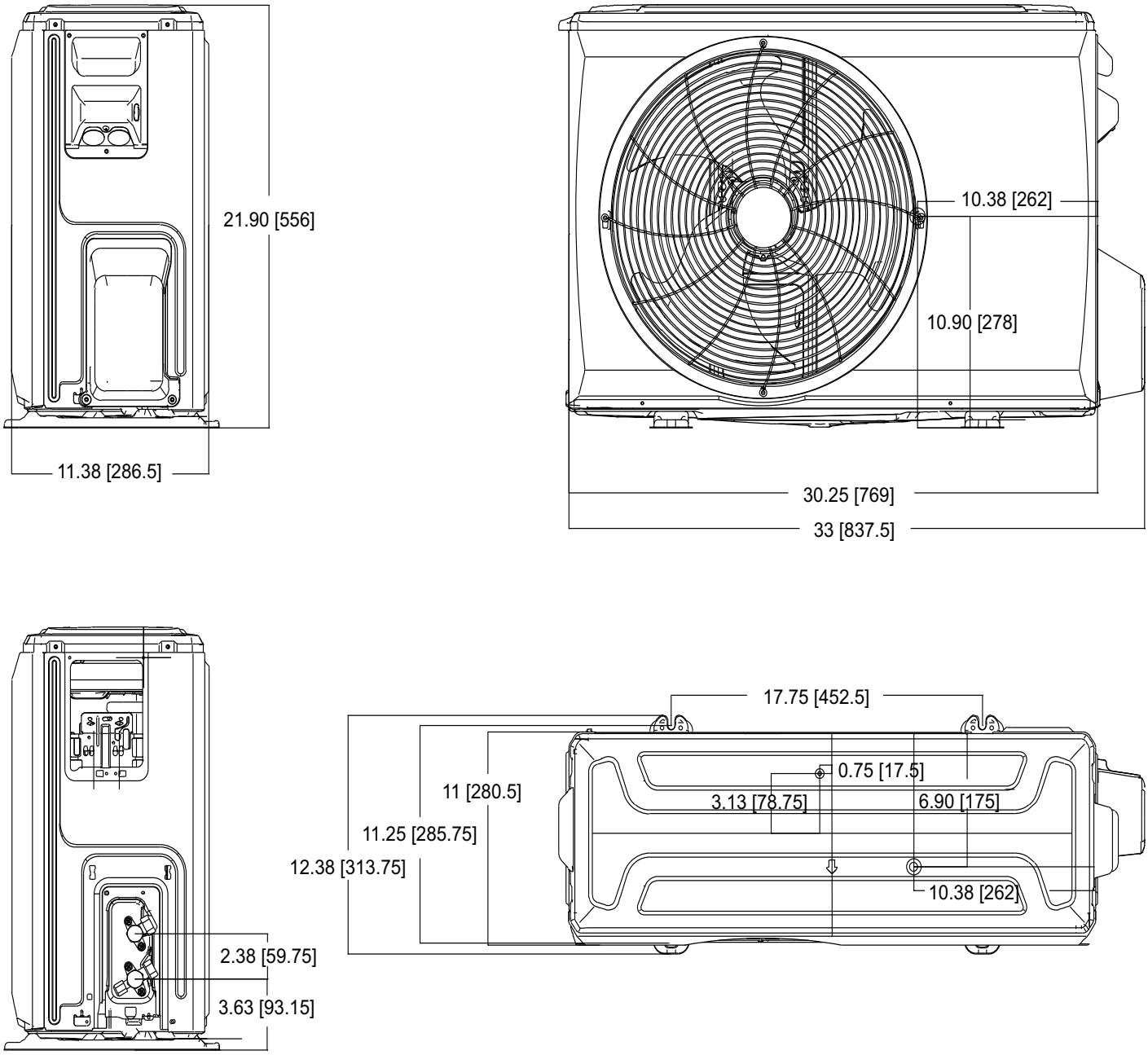

Fig. 2 — Sizes 9K/12K (115V) and 9K/12K (208/230V) Heat Pump and 18K Cooling Only

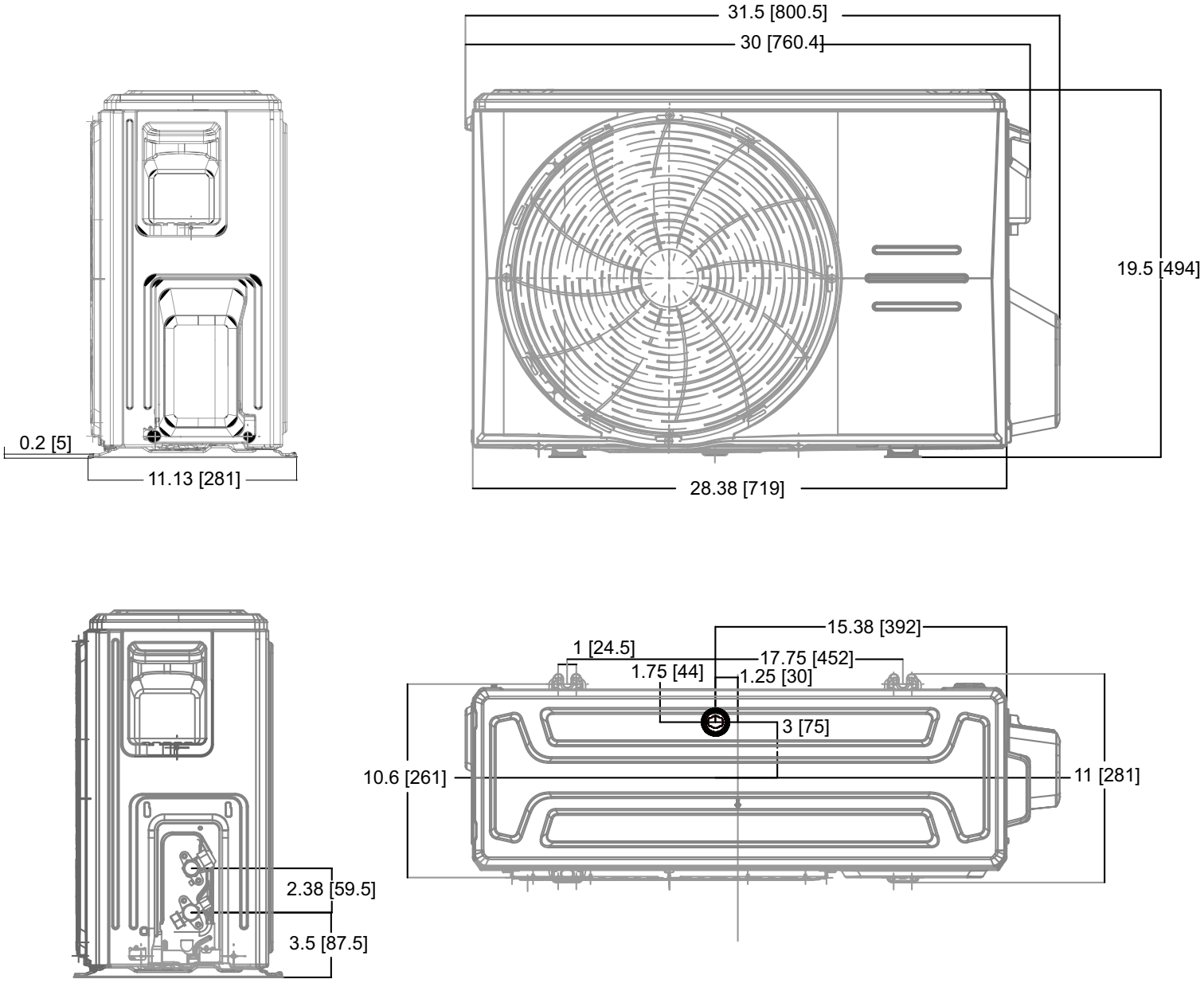

Fig. 3 — Sizes 9K/12K (115V) and 12K (208/230V) Cooling Only

DIMENSIONS (CONT)

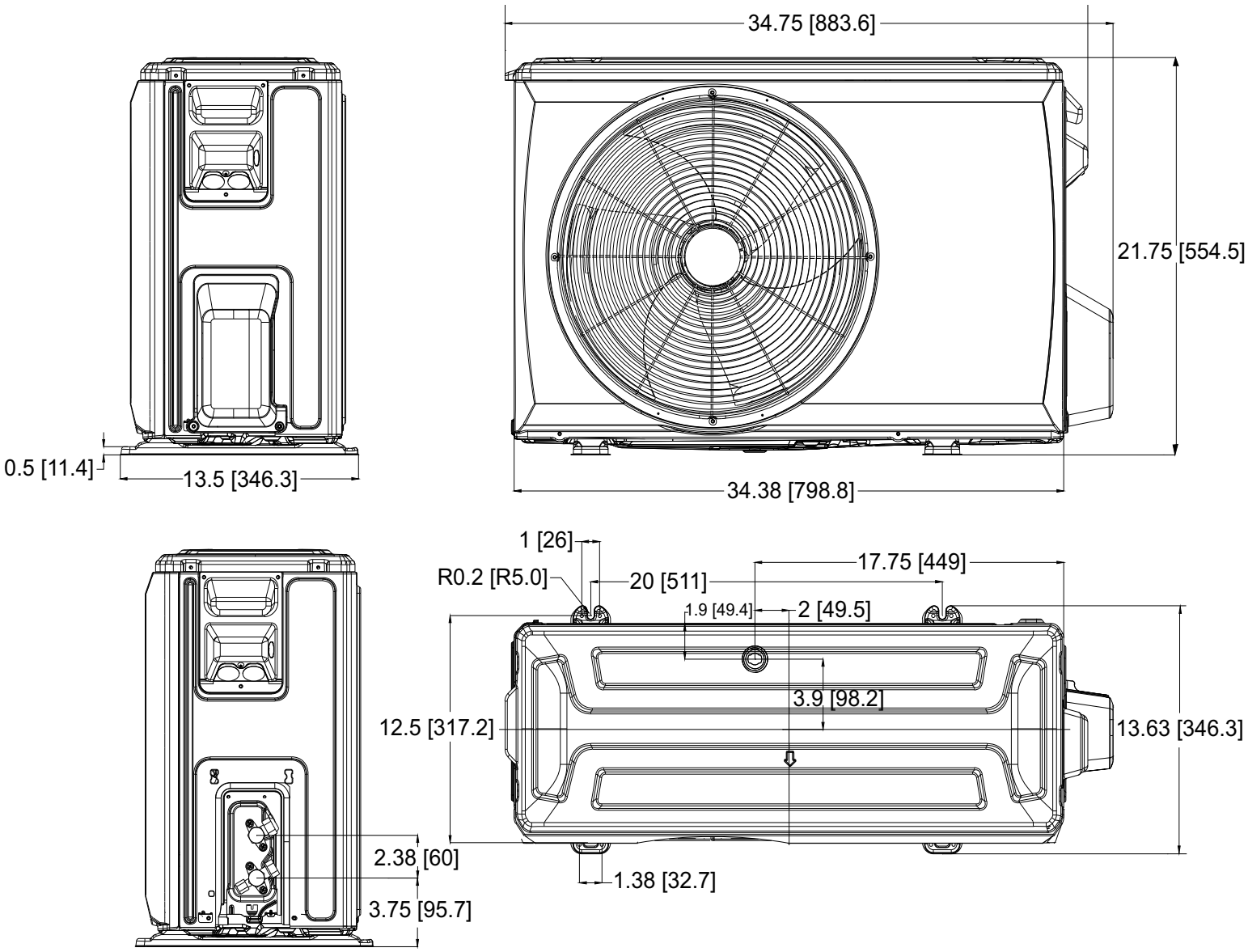

Fig. 4 — Size 18K Heat Pump

DIMENSIONS (CONT)

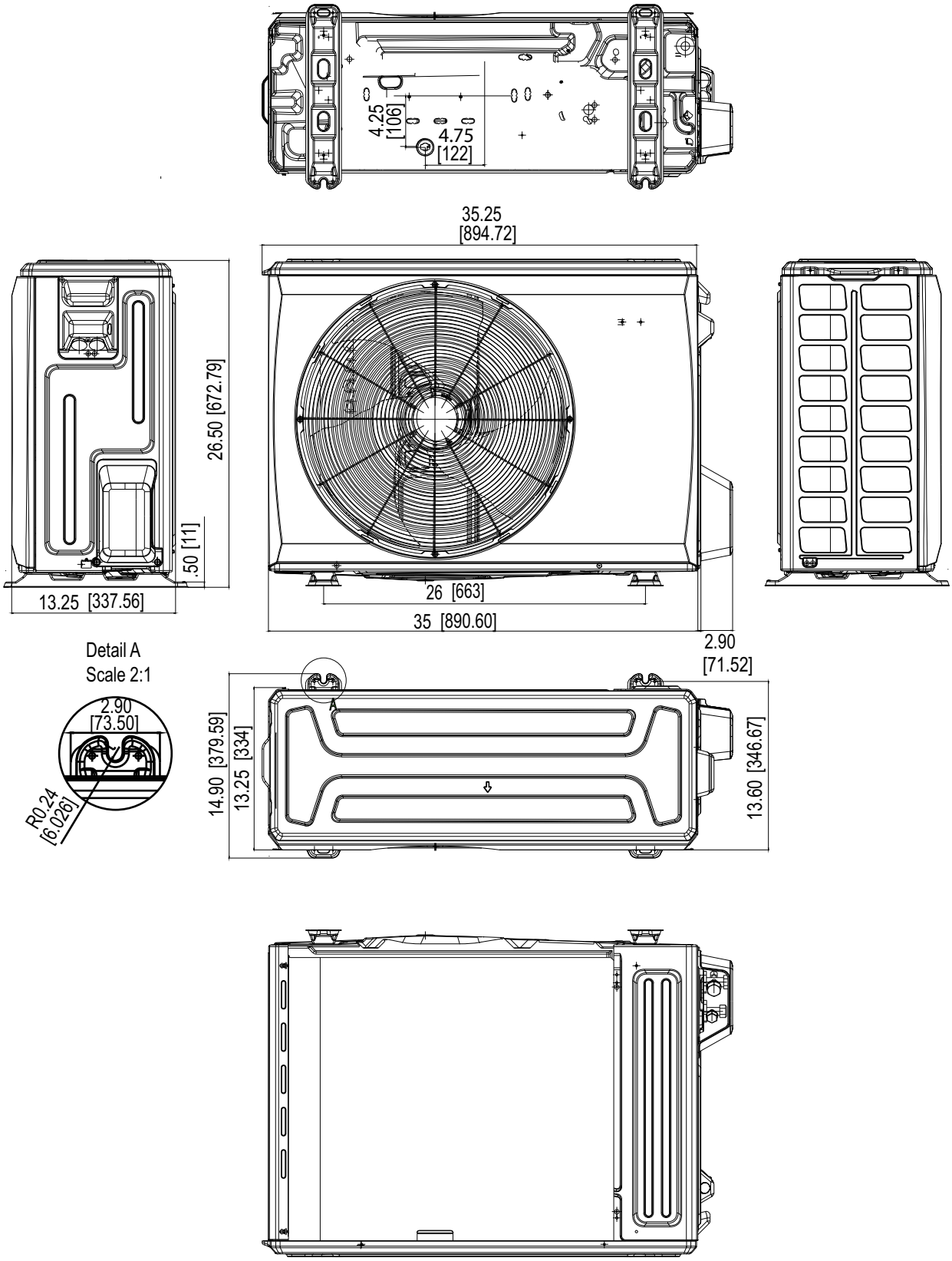

Fig. 5 —Size 24K Heat Pump

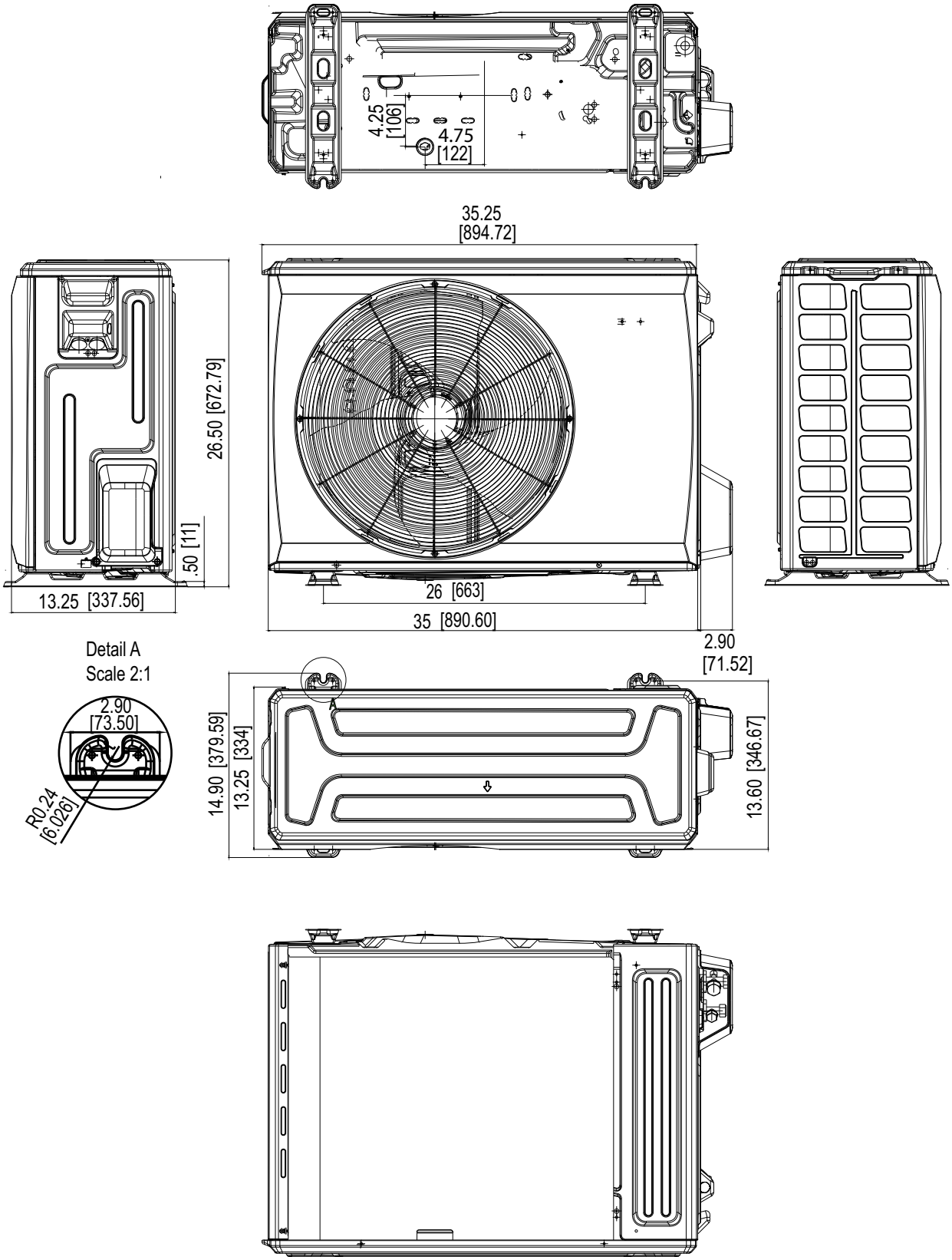

Fig. 6 —Size 24K Cooling Only

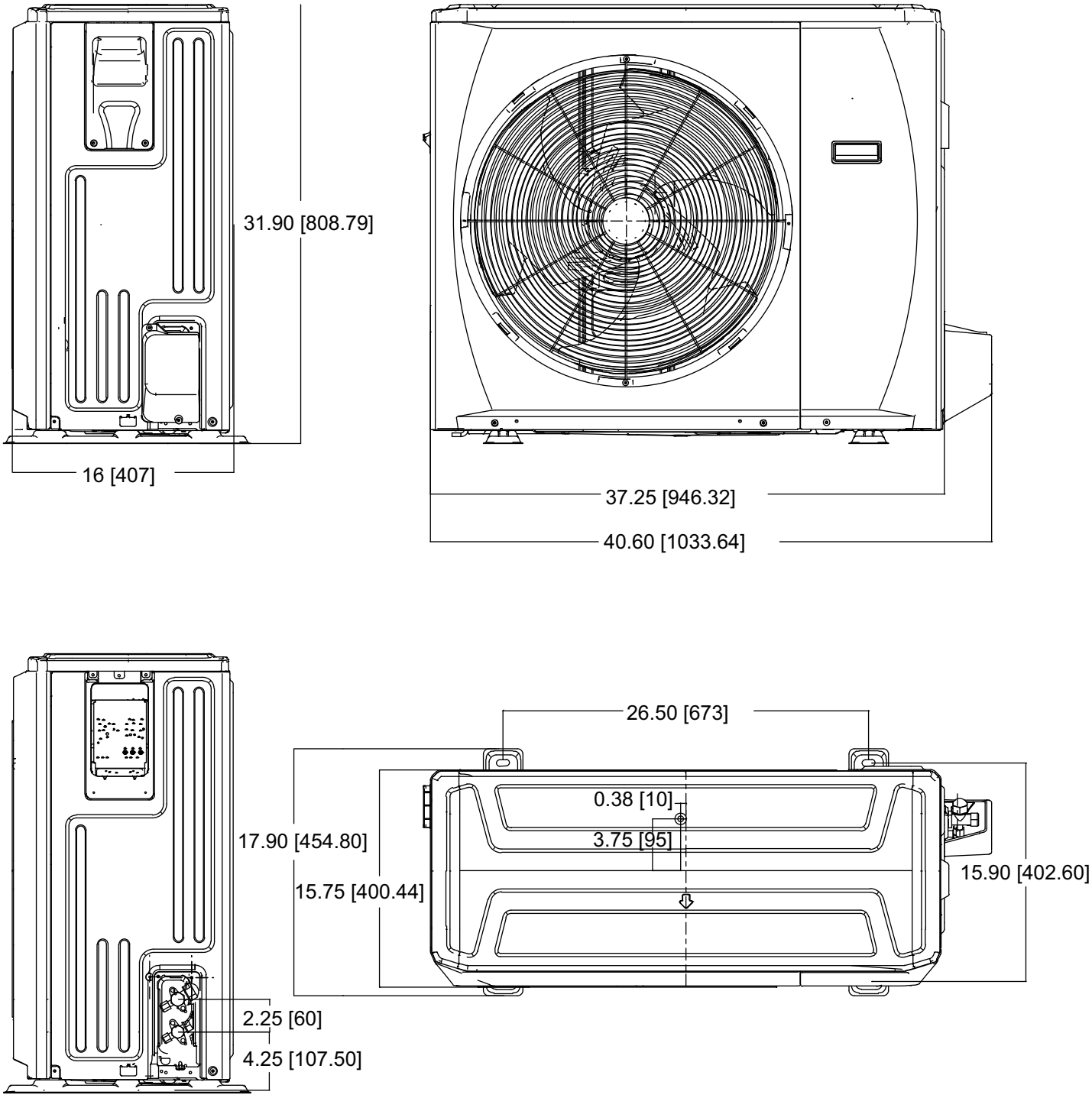

Fig. 7 —Size 30K Heat Pump

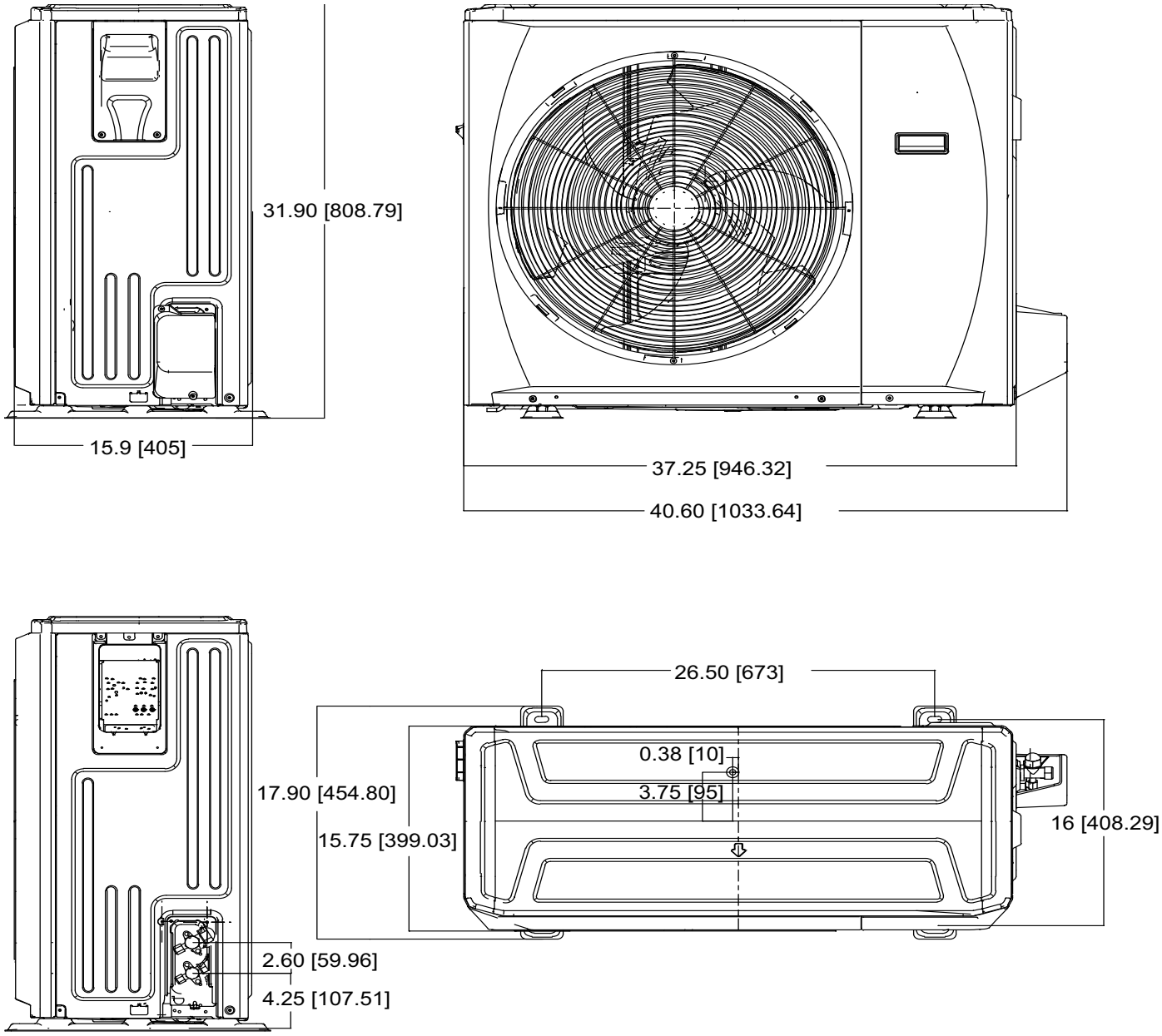

Fig. 8 —Size 36K Heat Pump

CLEARANCES

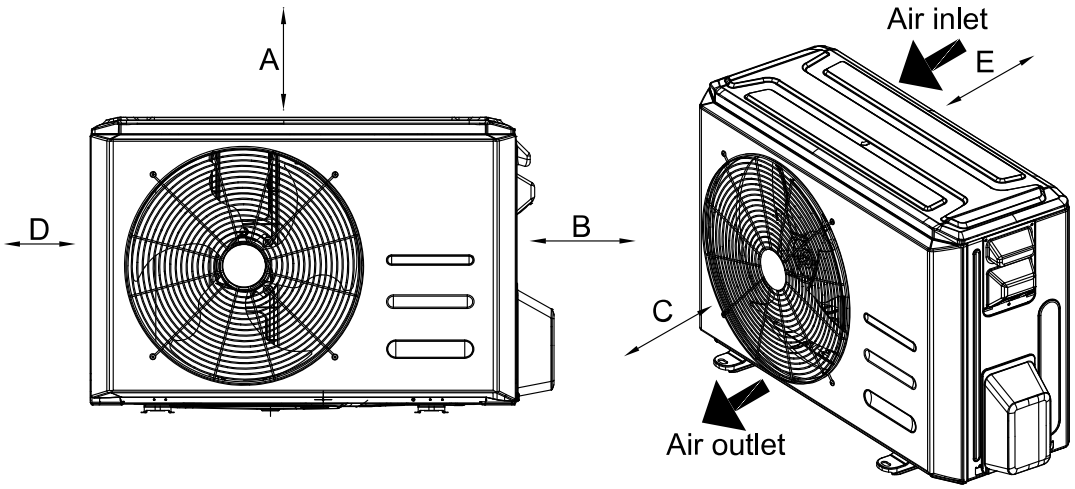

Fig. 9 — Clearances

UNIT	MINIMUM VALUE - IN. (MM)
A	24 (609)
B	24 (609)
C	24 (609)
D	4 (101)
E	6 (152)

NOTE: The outdoor unit must be mounted at least 2in (50mm) above the maximum anticipated snow depth.
NOTE: The inverter driven outdoor units cannot be stacked on top of one another.

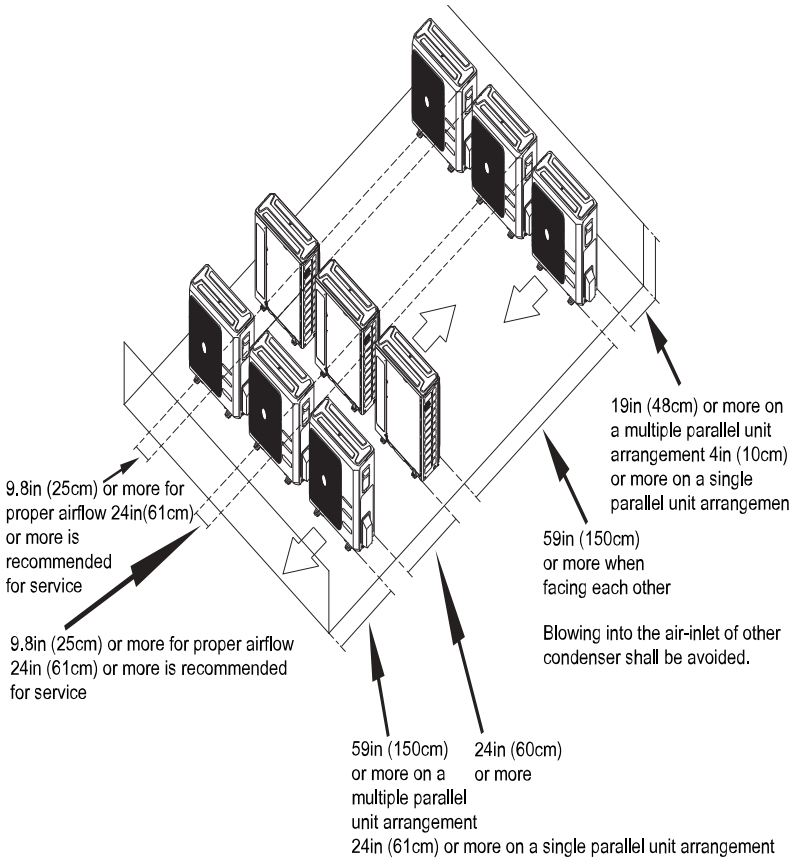

Fig. 10 — Clearances for multiple units

SPECIFICATIONS - HEAT PUMP

SYSTEM	SIZE		9K	12K	9K	12K	18K	24K	30K	36K
Electrical	Voltage, Phase, Cycle	V/Ph/Hz	115-1-60	115-1-60	208/230-1-60	208/230-1-60	208/230-1-60	208/230-1-60	208/230-1-60	208/230-1-60
	MCA	A.	20	18.5	12.0	15	15	19	25	28
	MOCP - Fuse Rating	A.	30	25	15	15	20	30	30	35
	Max - Min Voltage Range	V	127~104	127-104	253-187					
Operating Range	Cooling Outdoor DB Min - Max	° F (° C)	0~122 (-17~50)							
	Heating Outdoor DB Min - Max	° F (° C)	0~86 (-17~30)							
Piping	Total Piping Length	ft (m)	82 (25)	82 (25)	82 (25)	82 (25)	98 (30)	164 (50)	164 (50)	213(65)
	Piping Lift*	ft (m)	32 (10)	32 (10)	32 (10)	32 (10)	65 (20)	82 (25)	82 (25)	98.4 (30)
	Pipe Connection Size - Liquid	in (mm)	1/4 (6.35)	1/4 (6.35)	1/4 (6.35)	1/4 (6.35)	1/4 (6.35)	3/8 (9.52)	3/8 (9.52)	3/8 (9.52)
	Pipe Connection Size - Suction	in (mm)	3/8 (9.52)	1/2 (12.7)	3/8 (9.52)	1/2 (12.7)	1/2 (12.7)	5/8 (16)	5/8 (16)	5/8 (16)
Refrigerant	Type		R410A							
	Charge	lbs (kg)	1.59 (0.72)	1.79 (0.81)	1.59 (0.72)	1.79 (0.81)	2.98 (1.35)	3.92 (1.78)	6.17(2.8)	7.5(3.4)
	Metering Device		EEV					Throttle Valve	EEV + Throttle Valve	
Outdoor Coil	Face Area	Sq. Ft.	4.04	4.04.0	4.04.0	4.04.0	4.67	5.90	8.14	8.14
	No. Rows		1	1	1	1	2	1.6	3	3
	Fins per inch		18	20	18	20	20	20	18	18
	Circuits		2	2	2	2	4	5	6	6
Compressor	Type		Rotary Inverter							
	Model		KSK103D33U EZ	KSN98D64U FZ3	KSK103D33U EZ3	KSN98D64U FZ3	KSN140D21U FZ	KTM240D43 UKT	KTF250D22U MT	KTF250D22U MT
	Oil Type		VG74	VG74	VG74	VG74	VG74	VG74	VG74	VG74
	Oil Charge	Fl. Oz.	10.48	10.15	10.48	10.15	14.88	20.97	22.70	22.70
	Rated Input Current of the Power Conversion Equipment	A.	15	13.0	7	7.5	10	14.3	17	22
Outdoor	Unit Width	in (mm)	30.12 (765)	30.12 (765)	30.12 (765)	30.12 (765)	31.69 (805)	35.04 (890)	37.24(946)	37.24(946)
	Unit Height	in (mm)	21.85 (555)	21.85 (555)	21.85 (555)	21.85 (555)	21.81 (554)	26.50(673)	31.89(810)	31.89(810)
	Unit Depth	in (mm)	11.93 (303)	11.93 (303)	11.93 (303)	11.93 (303)	12.99 (330)	13.46 (342)	16.14(410)	16.14(410)
	Net Weight	lbs (kg)	57.76 (26.2)	62.17 (28.2)	55.11 (25.0)	59.30 (26.9)	73.85 (33.5)	97.88 (44.4)	142.86(64.8)	150.13(68.1)
	Airflow	CFM	1,294	1,235	1,294	1,235	1,235	1,765	2,235	2,235
	Sound Pressure	dB(A)	55.0	53.5	55	55.5	55	59.5	70	71

NOTE: See the current compatibility chart for a list of the indoor unit and outdoor unit match ups.

SPECIFICATIONS - COOLING ONLY

SYSTEM	SIZE		12	12	18	24
ELECTRICAL	Voltage, Phase, Cycle	V/Ph/Hz	115-1-60	208/230-1-60	208/230-1-60	208/230-1-60
	MCA	A.	19	9	19	19
	Max-Min Voltage*	V	127-104	253-187	253-187	253-187
OPERATING RANGE	Cooling Outdoor DB Min - Max	° F (° C)	0~122 (-17~50)	0~122 (-17~50)	0~122 (-17~50)	0~122 (-17~50)
PIPING	Total Piping Length	ft (m)	82 (25)	82 (25)	98 (30)	164 (50)
	Piping Lift**	ft (m)	33 (10)	33 (10)	66 (20)	66 (20)
	Pipe Connection Size - Liquid	in (mm)	1/4 (6.35)	1/4 (6.35)	1/4 (6.35)	3/8 (9.52)
	Pipe Connection Size - Suction	in (mm)	1/2 (12.7)	1/2 (12.7)	1/2 (12.7)	5/8 (16)
REFRIGERANT	Type		R410A			
	Charge	lbs (kg)	1.43 (0.65)	1.43 (0.65)	1.98 (0.9)	3.92 (1.78)
	Metering Device		Capillary			
OUTDOOR COIL	Face Area	Sq. Ft.	3.75	3.75	4.15	5.90
	No. Rows		1	1	2	1.6
	Fins per inch		21	21	21	20
	Circuits		2	2	2	5
COMPRESSOR	Compressor Type		Rotary Inverter			
	Model		KSK103D33UEZ3	KSK103D33UEZ3	KSN140D58UFZ	KTM240D43UKT
	Oil Type		VG74	VG74	VG74	VG74
	Oil Charge	Fl. Oz.	10.5	10.5	14.9	21.0
	Rated Input Current of the Power Conversion Equipment	A.	14.3	14.3	11.0	14.3
OUTDOOR	Unit Width	in (mm)	28.35 (720)	28.35 (720)	30.12 (765)	35.04 (890)
	Unit Height	in (mm)	19.49 (495)	19.49 (495)	21.85 (555)	26.50 (673)
	Unit Depth	in (mm)	10.63 (270)	10.63 (270)	11.93 (303)	13.46 (342)
	Net Weight	lbs (kg)	51.15 (23.2)	48.72 (22.1)	61.51 (27.9)	97.88 (44.4)
	Airflow	CFM	1,059	1,059	1,235	1,765
	Sound Pressure	dB(A)	52.0	52.5	55.5	59.5

* Permissible limits of the voltage range at which the unit will operate satisfactorily.

Manufacturer reserves the right to change, at any time, specifications and designs without notice and without obligations.

SYSTEM PERFORMANCE - HEAT PUMP

INDOOR MODEL		9K (115V)	12K (115V)	09K (208/230V)	12K (208/230V)	18K (208/230V)	24K (208/230V)	30K (208/230V)	36K (208/230V)
Energy Star	-	NO	NO	NO	NO	NO	NO	NO	NO
Cooling System Tons	-	0.75	1.0	0.75	1.0	1.5	2.0	2.5	3.0
Cooling Rated Capacity	Btu/h	9,000	12,000	9,000	12,000	18,000	24,000	30,000	36,000
Cooling Capacity Range	Btu/h	2,650~10,300	3,800~12,100	2,900~10,500	3,800~13,350	3,900~20,000	6,200~24,600	8,200~30,670	8,300~37,500
SEER	-	21.5	20	21.5	20.5	19.5	18.5	21	18
EER	-	12.5	10.3	12.6	10.8	11	9.5	12.2	9.5
Heating Rated Capacity (DOE H12 - 47°F)	Btu/h	10,000	12,000	10,000	12,000	18,800	24,000	30,000	36,000
Heating Rated Capacity (DOE H32 - 17°F)	Btu/h	5,800	7,000	5,800	7,000	11,400	16,300	20,000	20,000
Heating Maximum Capacity (17°F)	Btu/h	7,800	9,000	7,500	9,000	12,500	14,800	21,100	25,000
Heating Maximum Capacity (5°F)	Btu/h	7,500	6,272	7,300	8,000	11,700	15,400	17,800	20,000
Heating Capacity Range	Btu/h	2,700~10,500	2,730~12,500	2,400~10,500	2,730~13,900	6,300~19,400	6,800~26,800	11,800~30,800	10,900~37,360
HSPF	-	9.1	8.7	9.4	9.2	8.7	8.6	8.7	7.8
COP (DOE H12 - 47°F)	W/W	3.26	3.05	3.24	3.38	3.05	2.99	2.75	2.78
COP (DOE H32 - 17°F)	W/W	2.5	2.5	2.5	2.5	2.52	2.3	2.39	2.3
COP (5°F)	W/W	2.15	1.68	2.2	1.8	2.05	1.76	1.8	1.76

SYSTEM PERFORMANCE - COOLING ONLY

NON-DUCTED HEAT PUMP SYSTEMS		12K (115 V)	12K (208/230 V)	18K (208/230 V)	24K (208/230 V)
Cooling Rated Capacity (DOE A2 - 95°F)	Btu/h	11,500	11,500	17,000	24,000
SEER	Btu/h. W	20.5	20.5	19	17.1
EER (DOE A2 - 95°F)	Btu/h. W	11.2	11.2	10.9	9.3
Cooling Rated Capacity (DOE B2 - 82°F)	Btu/h	12,800	12,500	18,000	24,000
EER (DOE B2 - 82°F)	Btu/h. W	11.94	11.19	13	11
Cooling Capacity Range	Btu/h	3,200-12,800	3,200-12,900	4,500-18,000	6,760-24,300

Manufacturer reserves the right to change, at any time, specifications and designs without notice and without obligations.

COMPRESSOR SPECIFICATIONS - HEAT PUMP

OUTDOOR UNIT SYSTEM	9K	12K	9K	12K	18K	24K	30K	36K
Volts; Phase Hz.	115V~60Hz, 1Ph	115V~60Hz, 1Ph	208-230V~60Hz, 1 Ph	208-230V~60Hz, 1Ph	208-230V~60Hz, 1Ph	208-230V~60Hz, 1Ph	208-230V~60Hz, 1Ph	208-230V~60Hz, 1Ph
Type	Rotary							
Input (W)	325/826	292/765	325/826	292/765	1135	2045	2200	2200
Capacity (BTU/Hr)	6943/11106	6585/10577	6943/11106	6585/10577	14910	25931	27620	27620
Model	KSK103D33UEZ3	KSN98D64UFZ3	KSK103D33UEZ3	KSN98D64UFZ3	KSN140D21UFZ	KTM240D43UKT	KTF250D22UMT	KTF250D22UMT
Brand	GMCC							
Rated Input Current of the Power Conversion Equipment	14	12.98	7.0	7.5	10	14.25	16.0	18.0
Refrigerant Oil	Ester Oil							
Oil Type	VG74							
Oil Charge (fl. Oz)	10.48	10.15	10.48	10.15	14.88	20.97	22.7	22.7
Displacement	10.34	9.8	10.34	9.8	14	24	25.1	25.1

COMPRESSOR SPECIFICATIONS - COOLING ONLY

OUTDOOR UNIT SYSTEM	12K	12K	18K	24K
Volts; Phase Hz.	115V~60Hz,1Ph	208/230V~60Hz,1Ph	208/230V~60Hz,1Ph	208-230V~60Hz,1Ph
Type	Rotary			
Input (W)	325/826	325/826	1090	2045
Capacity (BTU/Hr)	6943/11106	6943/11106	14723	25931
Model	KSK103D33UEZ3	KSK103D33UEZ3	KSN140D58UFZ	KTM240D43UKT
Brand	GMCC			
Rated Input Current of the Power Conversion Equipment	14.3	14.3	11	14.25
Refrigerant Oil	Ester Oil			
Oil Type	VG74			
Oil Charge (fl. Oz)	10.48	10.48	14.88	20.97
Displacement (cm^3/rev)	10.34	10.34	14	24

Manufacturer reserves the right to change, at any time, specifications and designs without notice and without obligations.

REFRIGERANT COIL SPECIFICATIONS - HEAT PUMP

SYSTEM SIZE			9K(115)	12K(115V)	9K(208/230V)	12K(208/230V)	18K(208/230V)	24K(208/230V)	30K(208/230V)	36K(208/230V)
OUTDOOR COIL	Number of rows	Rows	1	1	1	1	2.0	1.6	3	3
	Tube pitch (a)x row pitch (b)	inch	0.83× 0.53	0.83× 0.87	0.83×0.53	0.83× 0.87	0.83× 0.87	0.83×0.87	0.83×0.53	0.83×0.53
		mm	21×13.37	21×22	21×13.37	21×22	21×22	21×22	21×13.37	21×13.37
	Fin Spacing	FPI	18	20	18	20	20	20	18	18
		mm	1.4	1.3	1.4	1.3	1.3	1.3	1.4	1.4
	Fin type		Louvered							
	Fin Material		Gold hydrophilic aluminum							
	Tube outside diameter	inch	0.276	0.28	0.28	0.28	0.28	0.28	0.28	0.28
		mm	7	7	7	7	7	7	7	7
	Nominal Tube Wall	inch	0.00954	0.00945	0.00945	0.00945	0.00945	0.00945	0.00945	0.00945
	Tube Enhancement	(Yes/ No)	Yes	Yes	Yes	Yes	Yes	Yes	Yes	Yes
	Tube Material		Copper							
	Coil length x height x width	inch (mm)	29.29 x 19.84 x 0.53 (744 x 504 x 13.37)	29.33 x 19.84 x 0.87 (745 x 504 x 22)	29.29 x 19.84 x 0.53 (744 x 504 x 13.37)	29.33 x 19.84 x 0.87 (745 x 504 x 22)	33.86 x 19.84 x 1.73 (860 x 504 x 44)	35.43 x 23.98 x 1.73 (900 x 609 x 44)	39.37 x 29.76 x 0.53	39.37 x 29.76 x 0.53
	Face area	ft2	4.04	4.04	4.04	4.04	4.67	5.9	8.14	8.14
	Number of circuits	#	2	2	2	2	4	5	6	6
	1st Capillary Outer diameter x inner diameter x Length	Inch (mm)	0.1 x 0.05 x 19.69 (2.5 x 1.3 x 500)	0.098 x 0.059 x 33.46 (2.5 x 1.5 x 850)	0.098 x 0.051 x 19.69 (2.5 x 1.3 x 500)	0.098 x 0.059 x 33.46 (2.5 x 1.5 x 850)	0.126 x 0.067 x 23.62 (3.2 x 1.7 x 600)	-	-	-
	2nd Capillary Outer diameter x inner diameter x Length	Inch (mm)	-	-	-	-	0.126 x 0.067 x 25.59 (3.2 x 1.7 x 650)	-	-	-
	High Burst Pressure	Psi (MPa)	550(3.79)	550(3.79)	550(3.79)	550(3.79)	550(3.79)	550(3.79)	550(3.79)	550(3.79)
	Low Burst Pressure	Psi (Ma)	340(2.34)	340(2.34)	340(2.34)	340(2.34)	340(2.34)	340(2.34)	340(2.34)	340(2.34)

Manufacturer reserves the right to change, at any time, specifications and designs without notice and without obligations.

REFRIGERANT COIL SPECIFICATIONS - COOLING ONLY

SYSTEM SIZE			12K (115 V)	12K (208/230 V)	18K (208/230 V)	24K (208/230 V)
OUTDOOR COIL	Number of	Rows	1	1	2.0	1.6
	Tube pitch (a)x row pitch (b)	inch	0.57x0.49	0.57x0.49	0.77x0.46	0.83×0.87
		mm	14.5x12.56	14.5x12.56	19.5x11.6	21×22
	Fin Spacing	FPI	21	21	21	20
		mm	1.2	1.2	1.2	1.3
	Fin type		Louvered			
	Fin Material		Unhydrophilic aluminum			Gold hydrophilic aluminum
	Tube outside diameter	inch	0.2	0.2	0.2	0.28
		mm	5	5	5	7
	Nominal Tube Wall	inch	0.00787	0.00787	0.00787	0.00945
	Tube Enhancement	(Yes/ No)	Yes	Yes	Yes	Yes
	Tube Material		Copper			
	Coil length x height x width	inch	29.53x18.27x0.49	29.53x18.27x0.49	29.92x19.96x0.46	35.43*23.98*1.73
		mm	750x464x12.56	750x464x12.56	760x507x11.6	900*609*44
	Face area	ft2	3.75	3.75	4.15	5.9
	Circuit #	#	2	2	2	5
	1st Capillary Outer diameter x inner diameter x Length	Inch (mm)	0.098x0.059x33.46(2.5x1.5x850)	0.098x0.059x33.46(2.5x1.5x850)	0.126x0.067x27.562(3.2x1.7x700)	-
	2nd Capillary Outer diameter x inner diameter x Length	Inch (mm)	-	-	-	-
	High Burst Pressure	Psi (MPa)	550(3.79)	550(3.79)	550(3.79)	550(3.79)
	Low Burst	Psi	340(2.34)	340(2.34)	340(2.34)	340(2.34)

Manufacturer reserves the right to change, at any time, specifications and designs without notice and without obligations.

PIPING AND REFRIGERANT - HEAT PUMP

SYSTEM SIZE			9K (115 V)	12K (115 V)	9K (208/230 V)	12K (208/230 V)	18K (208/230 V)	24K (208/230 V)	30K (208/230 V)	36K (208/230 V)
PIPING	Min. Piping Length	ft. (m)	9.8 (3)	9.8 (3)	9.8 (3)	9.8 (3)	9.8 (3)	9.8 (3)	9.8 (3)	9.8 (3)
	Standard Piping Length	ft. (m)	24.6 (7.5)	24.6 (7.5)	24.6 (7.5)	24.6 (7.5)	24.6 (7.5)	24.6 (7.5)	24.6 (7.5)	24.6 (7.5)
	Max. outdoor-indoor height difference	ft. (m)	32.8 (10)	32.8 (10)	32.8 (10)	32.8 (10)	65.6 (20)	82 (25)	82 (25)	98.4 (30)
	Max. Piping Length with no additional refrigerant charge per System (Standard Piping length)	ft. (m)	24.6 (7.5)	24.6 (7.5)	24.6 (7.5)	24.6 (7.5)	24.6 (7.5)	24.6 (7.5)	24.6 (7.5)	24.6 (7.5)
	Total Maximum Piping Length per system	ft. (m)	82 (25)	82 (25)	82 (25)	82 (25)	98.4 (30)	164 (50)	164 (50)	213 (65)
	Additional refrigerant charge (between Standard – Max piping length)	Oz/ft (g/m)	0.161(15)	0.161(15)	0.161(15)	0.161(15)	0.161(15)	0.322(30)	0.322(30)	0.322(30)
	Suction Pipe (size - connection type)	In (mm)	3/8” (9.52)	1/2” (12.7)	3/8” (9.52)	1/2” (12.7)	1/2” (12.7)	5/8” (15.9)	5/8” (15.9)	5/8” (15.9)
	Liquid Pipe (size - connection type)	In (mm)	1/4” (6.35)	1/4” (6.35)	1/4” (6.35)	1/4” (6.35)	1/4” (6.35)	3/8” (9.52)	3/8” (9.52)	3/8” (9.52)
REFRIGERANT	Refrigerant Type	Type	R410A	R410A	R410A	R410A	R410A	R410A	R410A	R410A
	Charge Amount	lb. (kg)	1.59(0.72)	1.79(0.81)	1.59(0.72)	1.79(0.81)	2.98(1.35)	3.92(1.78)	6.17(2.8)	7.5(3.4)

PIPING AND REFRIGERANT - COOLING ONLY

SYSTEM SIZE			12K (115V)	12K (208/230V)	18K(208/230V)	24K(208/230V)
PIPING	Min. Piping Length	ft. (m)	9.8 (3)	9.8 (3)	9.8 (3)	9.8 (3)
	Standard Piping Length	ft. (m)	24.6 (7.5)	24.6 (7.5)	24.6 (7.5)	24.6 (7.5)
	Max. outdoor-indoor height difference (OU higher than IU)	ft. (m)	32.8 (10)	32.8 (10)	65.6 (20)	82 (25)
	Max. outdoor-indoor height difference (IU higher than OU)	ft. (m)	32.8 (10)	32.8 (10)	65.6 (20)	82 (25)
	Max. Piping Length with no additional Refrigerant charge per System (Standard Piping length)	ft. (m)	24.6 (7.5)	24.6 (7.5)	24.6 (7.5)	24.6 (7.5)
	Total Maximum Piping Length per system	ft. (m)	82 (25)	82 (25)	98.4 (30)	164 (50)
	Additional refrigerant charge (between Standard – Max piping length)	Oz/ft (g/m)	0.161(15)	0.161(15)	0.161(15)	0.322(30)
	Suction Pipe (size - connection type)	In (mm)	ø1/2” (12.7)	ø1/2” (12.7)	ø1/2” (12.7)	5/8” (15.9)
	Liquid Pipe (size - connection type)	In (mm)	ø1/4” (6.35)	ø1/4” (6.35)	ø1/4” (6.35)	3/8” (9.52)
REFRIGERANT	Refrigerant Type	Type	R410A	R410A	R410A	R410A
	Charge Amount	lb. (kg)	1.43(0.65)	1.43(0.65)	1.98(0.9)	3.92(1.78)

Manufacturer reserves the right to change, at any time, specifications and designs without notice and without obligations.

COOLING PERFORMANCE DATA - HEAT PUMP

Cooling Performance Data (Heat Pump) (Sheet 1 of 2)

MODEL	COOLING Indoor Conditions DB	WB		OUTDOOR CONDITIONS (DB) 0°F (-17°C)	5°F (-15°C)	17°F (-8°C)	47°F (8°C)	77°F (25°C)	86°F (30°C)	95°F (35°C)	104°F (40°C)	113°F (45°C)	122°F (50°C)
12 (115V)	69.8°F (21°C)	59°F (15°C)	TC	9.36	9.30	9.52	10.55	9.73	9.83	9.01	8.38	3.79	3.79
			SC	6.81	6.76	6.82	7.22	6.81	6.86	6.48	6.16	3.78	3.78
			Input	0.47	0.44	0.37	0.49	0.69	0.87	0.92	1.00	0.62	0.62
	75.2°F (24°C)	62.6°F (17°C)	TC	11.30	11.24	11.45	12.49	11.67	11.76	10.95	10.31	5.72	5.72
			SC	7.95	7.91	8.06	8.79	8.21	8.28	7.70	7.26	4.03	4.03
			Input	0.72	0.69	0.62	0.73	0.94	1.12	1.16	1.24	0.86	0.86
	80.6°F (27°C)	66.2°F (19°C)	TC	12.63	12.57	12.78	13.82	13.00	13.09	12.28	11.64	7.06	7.06
			SC	8.64	8.60	8.75	9.46	8.89	8.96	8.40	7.97	4.83	4.83
			Input	0.84	0.81	0.74	0.85	1.06	1.24	1.29	1.37	0.98	0.98
	89.6°F (32°C)	73.4°F (23°C)	TC	15.07	15.01	15.22	16.26	15.44	15.53	14.71	14.08	9.49	9.49
			SC	9.18	9.14	9.27	9.90	9.40	9.46	8.96	8.58	5.78	5.78
			Input	1.05	1.02	0.95	1.07	1.27	1.46	1.50	1.58	1.20	1.20
09 (115V), (208-230V)	69.8°F (21°C)	59°F (15°C)	TC	7.16	9.70	6.51	9.06	8.36	8.48	7.95	7.43	6.44	4.86
			SC	5.33	6.28	4.96	5.99	5.72	5.77	5.51	5.26	4.81	4.12
			Input	0.26	0.47	0.20	0.44	0.62	0.78	0.84	0.91	0.91	0.87
	75.2°F (24°C)	62.6°F (17°C)	TC	8.18	10.72	7.53	10.07	9.37	9.50	8.97	8.45	7.46	5.88
			SC	5.70	7.47	5.24	7.02	6.53	6.62	6.25	5.88	5.20	4.10
			Input	0.28	0.49	0.22	0.47	0.64	0.81	0.87	0.94	0.93	0.90
	80.6°F (27°C)	66.2°F (19°C)	TC	9.19	11.74	8.54	11.09	10.39	10.51	9.99	9.46	8.47	6.89
			SC	6.27	8.00	5.82	7.56	7.08	7.17	6.81	6.45	5.78	4.70
			Input	0.31	0.52	0.25	0.49	0.67	0.83	0.89	0.96	0.96	0.92
	89.6°F (32°C)	73.4°F (23°C)	TC	11.08	13.62	10.43	12.97	12.27	12.40	11.87	11.35	10.36	8.78
			SC	7.59	9.33	7.14	8.89	8.41	8.49	8.13	7.77	7.10	6.01
			Input	0.35	0.56	0.29	0.54	0.71	0.87	0.94	1.01	1.00	0.97
12 (208-230V)	69.8°F (21°C)	59°F (15°C)	TC	7.71	8.62	10.56	10.33	9.69	9.75	11.03	8.30	6.45	3.38
			SC	5.69	6.19	6.68	7.21	6.87	6.88	7.46	6.19	5.40	3.38
			Input	0.23	0.30	0.50	0.45	0.64	0.80	1.36	0.91	0.79	0.54
	75.2°F (24°C)	62.6°F (17°C)	TC	8.05	8.96	10.89	10.67	10.03	10.09	11.37	8.64	6.79	3.72
			SC	5.69	6.33	7.70	7.54	7.09	7.13	8.03	6.11	4.80	2.63
			Input	0.14	0.21	0.41	0.36	0.55	0.71	1.27	0.82	0.70	0.45
	80.6°F (27°C)	66.2°F (19°C)	TC	8.78	9.68	11.62	11.40	10.76	10.81	12.09	9.37	7.52	4.44
			SC	6.23	6.87	8.24	8.08	7.63	7.67	8.58	6.65	5.33	3.15
			Input	0.15	0.21	0.41	0.36	0.56	0.72	1.27	0.83	0.70	0.46
	89.6°F (32°C)	73.4°F (23°C)	TC	10.39	11.29	13.23	13.01	12.37	12.42	13.70	10.98	9.13	6.05
			SC	6.93	7.53	8.83	8.68	8.25	8.29	9.14	7.32	6.09	4.04
			Input	0.20	0.27	0.47	0.42	0.61	0.77	1.33	0.88	0.76	0.51
18 (208-230V)	69.8°F (21°C)	59°F (15°C)	TC	13.66	15.21	15.36	17.02	15.14	14.36	16.35	12.21	7.44	7.44
			SC	9.95	11.34	11.40	11.94	11.02	10.72	11.91	9.86	7.44	7.44
			Input	0.62	0.80	0.81	0.82	1.04	1.18	1.72	1.42	1.22	1.22
	75.2°F (24°C)	62.6°F (17°C)	TC	14.79	16.34	16.49	18.15	16.26	15.48	17.48	13.34	8.56	8.56
			SC	10.82	11.95	12.06	13.28	11.90	11.32	12.79	9.76	6.26	6.26
			Input	0.66	0.84	0.85	0.86	1.08	1.22	1.76	1.46	1.26	1.26
	80.6°F (27°C)	66.2°F (19°C)	TC	16.03	17.57	17.73	19.39	17.50	16.72	18.72	14.57	9.80	9.80
			SC	11.51	12.62	12.73	13.92	12.57	12.00	13.44	10.47	7.04	7.04
			Input	0.71	0.89	0.90	0.91	1.12	1.27	1.81	1.51	1.30	1.30
	89.6°F (32°C)	73.4°F (23°C)	TC	18.49	20.03	20.19	21.85	19.96	19.18	21.18	17.04	12.26	12.26
			SC	11.97	12.98	13.08	14.15	12.93	12.42	13.72	11.03	7.94	7.94
			Input	0.80	0.98	0.99	1.00	1.22	1.36	1.90	1.60	1.40	1.40

Manufacturer reserves the right to change, at any time, specifications and designs without notice and without obligations.

Cooling Performance Data (Heat Pump) (Sheet 2 of 2)

MODEL	COOLING Indoor Conditions DB	WB		OUTDOOR CONDITIONS (DB) 0°F (-17°C)	5°F (-15°C)	17°F (-8°C)	47°F (8°C)	77°F (25°C)	86°F (30°C)	95°F (35°C)	104°F (40°C)	113°F (45°C)	122°F (50°C)
24 (208-230V)	69.8°F (21°C)	59°F (15°C)	TC	21.90	25.11	23.23	21.03	21.75	22.29	21.21	19.48	16.65	13.97
			SC	15.15	16.85	15.84	14.83	15.16	15.45	15.18	14.02	12.72	11.40
			Input	1.91	1.65	1.20	1.52	1.91	2.51	2.75	2.96	2.66	2.49
	75.2°F (24°C)	62.6°F (17°C)	TC	23.19	26.40	24.51	22.31	23.03	23.58	22.49	20.76	17.93	15.26
			SC	16.60	18.90	17.55	15.97	16.49	16.88	16.10	14.87	12.84	10.92
			Input	1.99	1.74	1.29	1.61	1.99	2.60	2.84	3.05	2.75	2.58
	80.6°F (27°C)	66.2°F (19°C)	TC	24.61	27.83	25.94	23.74	24.46	25.00	23.92	22.19	19.36	16.69
			SC	17.31	19.56	18.24	16.69	17.19	17.58	16.82	15.60	13.61	11.73
			Input	2.10	1.84	1.39	1.71	2.10	2.70	2.94	3.15	2.85	2.68
	89.6°F (32°C)	73.4°F (23°C)	TC	27.47	30.68	28.80	26.59	27.31	27.86	26.77	25.05	22.22	19.54
			SC	19.40	21.67	20.34	18.78	19.29	19.68	18.91	17.69	15.69	13.80
			Input	2.30	2.04	1.59	1.91	2.30	2.90	3.14	3.35	3.05	2.88
30 (208-230V)	69.8°F (21°C)	59°F (15°C)	TC	29.76	28.98	27.43	25.33	20.49	18.99	24.71	23.41	15.64	6.52
			SC	20.12	19.71	18.99	18.02	15.53	14.82	17.89	16.92	13.36	6.52
			Input	1.18	1.27	1.40	1.69	1.34	1.51	3.01	3.31	2.34	1.52
	75.2°F (24°C)	62.6°F (17°C)	TC	33.23	32.44	30.89	28.79	23.96	22.45	28.17	26.87	19.10	9.98
			SC	20.72	20.23	19.26	17.95	14.94	14.00	17.57	16.75	11.91	6.22
			Input	2.15	2.24	2.37	2.66	2.31	2.47	3.98	4.28	3.31	2.49
	80.6°F (27°C)	66.2°F (19°C)	TC	36.38	35.60	34.05	31.95	27.11	25.61	31.33	30.03	22.26	13.14
			SC	21.46	20.99	20.08	18.84	15.99	15.10	18.48	17.71	13.13	7.75
			Input	2.81	2.90	3.03	3.32	2.97	3.13	4.64	4.94	3.97	3.15
	89.6°F (32°C)	73.4°F (23°C)	TC	4.42	41.64	40.09	37.98	33.15	31.64	37.37	36.06	28.29	19.17
			SC	22.16	21.75	20.94	19.84	17.31	16.53	19.52	18.84	14.78	10.01
			Input	3.79	3.87	4.00	4.30	3.94	4.11	5.62	5.92	4.94	4.12
36 (208-230V)	69.8°F (21°C)	59°F (15°C)	TC	31.66	31.22	25.11	29.92	28.89	28.36	29.08	23.61	19.48	7.62
			SC	21.00	20.74	17.58	20.03	19.48	19.16	19.48	16.68	14.65	7.35
			Input	1.31	1.38	1.69	1.97	2.48	2.95	4.20	3.15	2.83	1.49
	75.2°F (24°C)	62.6°F (17°C)	TC	34.66	34.22	28.11	32.91	31.89	31.36	32.07	26.61	22.48	10.62
			SC	2.66	22.38	18.38	21.52	20.85	20.50	20.97	17.40	14.70	6.94
			Input	1.46	1.53	1.84	2.13	2.63	3.10	4.35	3.30	2.98	1.65
	80.6°F (27°C)	66.2°F (19°C)	TC	37.70	37.27	31.16	35.96	34.94	34.41	35.12	29.66	25.52	13.67
			SC	23.94	23.66	19.78	22.83	22.18	21.85	22.30	18.83	16.21	8.68
			Input	1.60	1.68	1.99	2.27	2.78	3.25	4.49	3.44	3.13	1.79
	89.6°F (32°C)	73.4°F (23°C)	TC	43.42	42.99	36.88	41.68	40.66	40.13	40.84	35.38	31.24	19.39
			SC	24.83	24.58	21.09	23.83	23.25	22.94	23.35	20.23	17.87	11.09
			Input	1.88	1.95	2.26	2.54	3.05	3.52	4.77	3.72	3.40	2.06

LEGEND

DB - Dry Bulb
WB - Wet Bulb
TC - Total Net Capacity (1000 Btu/hour)
SC - Sensible Capacity (1000 Btu/hour)
Input - Total Power (kW)
COP - Coefficient of Performance

Manufacturer reserves the right to change, at any time, specifications and designs without notice and without obligations.

COOLING PERFORMANCE DATA - COOLING ONLY

MODEL	INDOOR CONDITIONS			0°F (-17°C)	5°F (-15°C)	17°F (-8°C)	47°F (8°C)	77°F (25°C)	86°F (30°C)	95°F (35°C)	104°F (40°C)	113°F (45°C)	122°F (50°C)
	DB	WB											
12 (115V)	69.8°F (21°C)	59°F (15°C)	TC	6.63	6.79	7.43	8.65	8.61	10.32	9.17	8.68	4.64	4.64
			SC	5.07	5.96	6.21	6.50	6.44	7.06	6.68	6.11	4.17	4.17
			Input	0.25	0.23	0.27	0.31	0.52	0.97	1.01	1.03	0.75	0.75
	75.2°F (24°C)	62.6°F (17°C)	TC	7.54	7.70	8.34	9.56	9.52	11.23	10.08	9.59	5.55	5.55
			SC	5.54	5.66	6.13	7.02	6.99	8.25	7.41	7.05	4.08	4.08
			Input	0.36	0.34	0.38	0.42	0.63	1.08	1.12	1.14	0.86	0.86
	80.6°F (27°C)	66.2°F (19°C)	TC	8.23	8.39	9.03	10.25	10.21	11.92	10.77	10.28	6.24	6.24
			SC	5.87	5.99	6.44	7.32	7.29	8.51	7.69	7.34	4.45	4.45
			Input	0.43	0.41	0.45	0.49	0.70	1.15	1.19	1.21	0.93	0.93
	89.6°F (32°C)	73.4°F (23°C)	TC	9.55	9.71	10.35	11.57	11.53	13.24	12.09	11.60	7.56	7.56
			SC	6.18	6.28	6.70	7.48	7.46	8.56	7.82	7.50	4.89	4.89
			Input	0.56	0.54	0.58	0.62	0.83	1.28	1.32	1.34	1.06	1.06
12 (230V)	69.8°F (21°C)	59°F (15°C)	TC	7.25	7.12	7.93	9.35	9.40	10.92	9.90	9.27	7.35	5.23
			SC	5.60	6.20	6.79	6.85	6.79	7.55	7.38	6.51	5.88	4.77
			Input	0.29	0.30	0.35	0.38	0.60	1.02	1.14	1.21	1.10	0.81
	75.2°F (24°C)	62.6°F (17°C)	TC	7.98	7.85	8.66	10.08	10.13	11.65	10.63	10.00	8.08	5.96
			SC	6.11	6.01	6.63	7.72	7.76	8.92	8.14	7.66	6.19	4.56
			Input	0.37	0.38	0.43	0.46	0.68	1.10	1.22	1.29	1.18	0.89
	80.6°F (27°C)	66.2°F (19°C)	TC	8.56	8.43	9.24	10.66	10.71	12.23	11.21	10.58	8.66	6.54
			SC	6.41	6.31	6.92	7.98	8.02	9.16	8.40	7.92	6.49	4.90
			Input	0.47	0.48	0.53	0.56	0.78	1.20	1.32	1.39	1.28	0.99
	89.6°F (32°C)	73.4°F (23°C)	TC	9.77	9.64	10.45	11.87	11.92	13.44	12.42	11.79	9.87	7.75
			SC	7.35	7.25	7.86	8.93	8.97	10.11	9.34	8.87	7.43	5.83
			Input	0.66	0.67	0.72	0.75	0.97	1.39	1.51	1.58	1.47	1.18
18K	69.8°F (21°C)	59°F (15°C)	TC	8.21	11.45	12.62	14.76	15.92	17.55	16.86	14.21	12.35	7.80
			SC	7.10	10.20	10.96	10.88	10.43	12.14	11.67	10.65	9.89	7.56
			Input	0.28	0.45	0.52	0.63	0.93	1.63	1.66	1.61	1.61	1.20
	75.2°F (24°C)	62.6°F (17°C)	TC	10.28	13.52	14.69	16.83	17.99	19.62	18.93	16.28	14.42	9.87
			SC	7.11	9.35	10.16	11.64	12.45	13.57	13.10	11.26	9.98	6.83
			Input	0.36	0.53	0.60	0.71	1.01	1.71	1.74	1.69	1.69	1.28
	80.6°F (27°C)	66.2°F (19°C)	TC	11.63	14.87	16.04	18.18	19.34	20.96	20.28	17.63	15.77	11.22
			SC	7.89	10.08	10.88	12.33	13.12	14.22	13.75	11.96	10.69	7.61
			Input	0.41	0.58	0.65	0.76	1.06	1.76	1.79	1.74	1.74	1.33
	89.6°F (32°C)	73.4°F (23°C)	TC	13.64	16.88	18.05	20.19	21.35	22.98	22.29	19.64	17.78	13.23
			SC	9.04	11.19	11.96	13.38	14.15	15.23	14.77	13.02	11.78	8.77
			Input	0.48	0.65	0.72	0.83	1.13	1.83	1.86	1.81	1.81	1.40
24K	69.8°F (21°C)	59°F (15°C)	TC	21.67	22.07	22.82	21.42	21.76	22.11	21.06	19.74	10.83	10.83
			SC	15.19	15.29	15.66	14.99	15.14	15.30	14.82	14.12	10.05	10.05
			Input	1.91	1.89	1.27	1.50	1.89	2.34	2.53	2.74	1.82	1.82
	75.2°F (24°C)	62.6°F (17°C)	TC	23.08	23.47	24.22	22.82	23.17	23.51	22.46	21.14	12.23	12.23
			SC	16.33	16.61	17.14	16.15	16.39	16.63	15.89	14.96	8.65	8.65
			Input	1.99	1.98	1.36	1.59	1.98	2.43	2.62	2.83	1.91	1.91
	80.6°F (27C)	66.2F (19C)	TC	24.59	24.99	25.74	24.34	24.68	25.02	23.98	22.65	13.74	13.74
			SC	17.13	17.41	17.93	16.95	17.19	17.43	16.70	15.78	9.57	9.57
			Input	2.09	2.07	1.45	1.68	2.07	2.52	2.71	2.92	2.00	2.00
	89.6°F (32°C)	73.4°F (23°C)	TC	27.57	27.97	28.72	27.32	27.66	28.01	26.96	25.64	16.72	16.72
			SC	17.49	17.74	18.22	17.33	17.55	17.76	17.10	16.26	10.61	10.61
			Input	2.26	2.25	1.63	1.86	2.25	2.70	2.89	3.10	2.18	2.18

Manufacturer reserves the right to change, at any time, specifications and designs without notice and without obligations.

HEATING PERFORMANCE DATA - HEAT PUMP

Heating Performance Data (Heat Pump) (Sheet 1 of 2)

MODEL	HEATING		OUTDOOR CONDITIONS (DB)								
	Indoor Conditions DB		0°F (-17°C)	5°F (-15°C)	17°F (-8°C)	19.4°F (-7°C)	24.8°F (-4°C)	32°F (0°C)	39.2°F (4°C)	44.6°F (7°C)	53.6°F (12°C)
12K (115V)	59°F (15°C)	TC	5.64	6.08	7.43	7.69	8.70	9.08	10.12	10.98	11.92
		Input	0.90	0.98	0.92	0.92	0.91	0.86	0.90	0.93	0.98
		COP	1.84	1.82	2.36	2.44	2.79	3.11	3.29	3.46	3.58
	64.4°F (18°C)	TC	5.67	6.10	7.46	7.71	8.73	9.10	10.15	11.01	11.95
		Input	0.94	1.02	0.97	0.97	0.96	0.90	0.94	0.97	1.02
		COP	1.77	1.75	2.26	2.34	2.67	2.97	3.15	3.32	3.43
	69°F (20.5°C)	TC	5.69	6.12	7.48	7.74	8.75	9.12	10.17	11.03	11.97
		Input	0.90	0.98	0.92	0.92	0.91	0.86	0.90	0.93	0.98
		COP	1.84	1.82	2.36	2.44	2.79	3.11	3.29	3.46	3.58
	71.6°F (22°C)	TC	5.09	5.52	6.88	7.13	8.15	8.52	9.57	10.43	11.37
		Input	1.00	1.08	1.02	1.02	1.01	0.95	1.00	1.03	1.08
		COP	1.50	1.50	1.97	2.04	2.36	2.62	2.80	2.97	3.09
9K (115V), (208-230V)	59°F (15°C)	TC	7.22	7.39	9.28	9.60	9.21	9.85	9.95	10.76	11.81
		Input	1.15	1.15	1.17	1.19	1.13	1.02	1.01	1.01	1.03
		COP	1.84	1.88	2.33	2.35	2.39	2.84	2.88	3.13	3.34
	64.4°F (18°C)	TC	7.23	7.40	9.29	9.61	9.22	9.86	9.96	10.78	11.82
		Input	1.15	1.15	1.17	1.20	1.13	1.02	1.01	1.01	1.04
		COP	1.84	1.89	2.33	2.35	2.39	2.83	2.88	3.13	3.34
	69°F (20.5°C)	TC	7.24	7.41	9.30	9.62	9.23	9.87	9.97	10.79	11.83
		Input	1.16	1.15	1.17	1.20	1.13	1.02	1.02	1.01	1.04
		COP	1.84	1.88	2.33	2.35	2.39	2.83	2.87	3.13	3.33
	71.6°F (22°C)	TC	7.24	7.42	9.31	9.62	9.23	9.88	9.98	10.79	11.83
		Input	1.16	1.15	1.17	1.20	1.14	1.02	1.02	1.01	1.04
		COP	1.84	1.88	2.33	2.35	2.38	2.83	2.87	3.12	3.33
12K (208-230V)	59°F (15°C)	TC	7.49	6.65	10.28	9.87	11.45	11.38	12.59	13.15	11.74
		Input	1.26	1.18	1.28	1.27	1.33	1.15	1.22	1.25	0.90
		COP	1.75	1.64	2.35	2.28	2.53	2.91	3.03	3.07	3.83
	64.4°F (18°C)	TC	7.40	6.56	10.19	9.78	11.37	11.29	12.50	13.06	11.65
		Input	1.25	1.18	1.28	1.26	1.32	1.14	1.21	1.25	0.89
		COP	1.74	1.63	2.34	2.27	2.53	2.90	3.03	3.07	3.83
	69°F (20.5°C)	TC	7.32	6.49	10.11	9.70	11.29	11.21	12.43	12.98	11.57
		Input	1.24	1.17	1.27	1.26	1.31	1.13	1.21	1.24	0.89
		COP	1.73	1.62	2.33	2.26	2.52	2.90	3.02	3.06	3.83
	71.6°F (22°C)	TC	7.28	6.44	10.07	9.66	11.25	11.17	12.38	12.94	11.53
		Input	1.24	1.17	1.27	1.25	1.31	1.13	1.20	1.24	0.88
		COP	1.72	1.62	2.33	2.26	2.52	2.89	3.02	3.06	3.83
18K (208-230V)	59°F (15°C)	TC	10.84	10.77	13.29	13.87	15.52	17.04	17.47	18.04	17.93
		Input	1.40	1.45	1.41	1.44	1.53	1.60	1.52	1.55	1.29
		COP	2.29	2.18	2.77	2.82	2.97	3.12	3.38	3.41	4.09
	64.4°F (18°C)	TC	10.50	10.44	12.95	13.53	15.19	16.70	17.13	17.71	17.60
		Input	1.46	1.50	1.46	1.50	1.59	1.66	1.57	1.61	1.34
		COP	2.11	2.03	2.59	2.65	2.80	2.95	3.19	3.23	3.84
	69°F (20.5°C)	TC	10.21	10.15	12.67	13.25	14.90	16.41	16.84	17.42	17.31
		Input	1.40	1.45	1.41	1.44	1.53	1.60	1.52	1.55	1.29
		COP	2.29	2.18	2.77	2.82	2.97	3.12	3.38	3.41	4.09
	71.6°F (22°C)	TC	10.60	10.53	13.05	13.63	15.28	16.80	17.23	17.80	17.69
		Input	1.54	1.58	1.54	1.58	1.66	1.74	1.65	1.68	1.42
		COP	2.02	1.95	2.48	2.54	2.69	2.83	3.06	3.10	3.65

Manufacturer reserves the right to change, at any time, specifications and designs without notice and without obligations.

Heating Performance Data (Heat Pump) (Sheet 2 of 2)

MODEL	HEATING		OUTDOOR CONDITIONS (DB)								
	Indoor Conditions DB		0°F (-17°C)	5°F (-15°C)	17°F (-8°C)	19.4°F (-7°C)	24.8°F (-4°C)	32°F (0°C)	39.2°F (4°C)	44.6°F (7°C)	53.6°F (12°C)
24K (208-230V)	59°F (15°C)	TC	14.87	16.28	20.17	20.92	22.88	24.63	26.61	26.72	29.63
		Input	2.20	2.30	2.62	2.67	2.85	2.92	3.09	2.65	3.08
		COP	1.98	2.08	2.26	2.30	2.36	2.48	2.53	2.96	2.82
	64.4°F (18°C)	TC	14.92	16.34	20.23	20.97	22.93	24.69	26.66	26.78	29.68
		Input	2.20	2.30	2.62	2.67	2.85	2.92	3.09	2.65	3.08
		COP	1.99	2.08	2.27	2.31	2.36	2.48	2.53	2.97	2.82
	69°F (20.5°C)	TC	14.97	16.38	20.27	21.02	22.98	24.73	26.71	26.83	29.73
		Input	2.20	2.30	2.62	2.67	2.85	2.92	3.09	2.65	3.08
		COP	1.99	2.08	2.27	2.31	2.36	2.48	2.53	2.97	2.83
	71.6°F (22°C)	TC	15.00	16.41	20.30	21.05	23.01	24.76	26.74	26.85	29.75
		Input	2.20	2.30	2.62	2.67	2.85	2.92	3.09	2.65	3.08
		COP	2.00	2.09	2.27	2.31	2.37	2.49	2.54	2.97	2.83
30K (208-230V)	59°F (15°C)	TC	16.44	18.29	22.97	24.15	25.02	28.42	31.70	31.47	32.68
		Input	2.61	2.81	2.89	2.96	3.13	3.32	3.56	3.41	3.18
		COP	1.85	1.91	2.33	2.40	2.34	2.51	2.61	2.70	3.01
	64.4°F (18°C)	TC	16.63	18.48	23.16	24.34	25.21	28.61	31.89	31.66	32.87
		Input	2.62	2.82	2.90	2.97	3.14	3.34	3.57	3.43	3.19
		COP	1.86	1.92	2.34	2.40	2.35	2.51	2.62	2.71	3.02
	69°F (20.5°C)	TC	16.79	18.64	23.32	24.50	25.37	28.77	32.05	31.82	33.03
		Input	2.64	2.84	2.91	2.98	3.15	3.35	3.58	3.44	3.21
		COP	1.87	1.93	2.35	2.41	2.36	2.52	2.62	2.71	3.02
	71.6°F (22°C)	TC	16.88	18.73	23.41	24.59	25.46	28.86	32.14	31.91	33.12
		Input	2.64	2.84	2.92	2.99	3.16	3.36	3.59	3.44	3.21
		COP	1.87	1.93	2.35	2.41	2.36	2.52	2.62	2.72	3.02
36K (208-230V)	59°F (15°C)	TC	21.14	23.41	23.64	24.90	26.17	27.86	32.56	29.75	32.76
		Input	3.47	3.61	3.57	3.64	3.70	3.73	4.14	3.81	3.48
		COP	1.79	1.90	1.94	2.01	2.07	2.19	2.31	2.29	2.76
	64.4°F (18°C)	TC	21.64	23.91	24.14	25.40	26.67	28.35	33.06	30.25	33.25
		Input	2.13	2.24	2.28	2.35	4.04	4.07	4.48	4.16	3.82
		COP	2.97	3.12	3.10	3.17	1.93	2.04	2.16	2.13	2.55
	69°F (20.5°C)	TC	22.06	24.34	24.56	25.83	27.09	28.78	33.48	30.67	33.68
		Input	1.79	1.90	1.94	2.01	3.70	3.73	4.14	3.81	3.48
		COP	3.47	3.61	3.57	3.64	2.07	2.19	2.31	2.29	2.76
	71.6°F (22°C)	TC	23.79	26.07	26.30	27.56	28.83	30.51	35.22	32.41	35.41
		Input	4.27	4.41	4.37	2.81	4.50	4.53	4.94	4.62	4.28
		COP	1.63	1.73	1.76	2.87	1.88	1.97	2.09	2.06	2.42

LEGEND

DB - Dry Bulb
WB - Wet Bulb
TC - Total Net Capacity (1000 Btu/hour)
SC - Sensible Capacity (1000 Btu/hour)
Input - Total Power (kW)
COP - Coefficient of Performance

Manufacturer reserves the right to change, at any time, specifications and designs without notice and without obligations.

APPLICATION DATA

Unit Selection

Select equipment that either matches or supports slightly more than

the anticipated peak load. This provides better humidity control, fewer unit cycles, and less part-load operation.

For units used in spaces with high sensible loads base equipment selection on unit sensible load not on the total anticipated load. Adjust for anticipated room wet bulb temperature to avoid undersizing the equipment.

Unit Mounting (Outdoor)

Refer to the unit's installation instructions for further details.

Unit leveling - For reliable operation, units should be level in all planes.

Clearance - Minimum clearance (see Fig. 9 — on page 13) must be provided for airflow. The condensing units are designed for free-flow application. Air inlets and outlets should not be restricted.

Unit location - A location which is convenient to installation and not exposed to strong winds. A location that can bear the weight of the outdoor unit and where the outdoor unit can be mounted in a level position.

Do not install the indoor or outdoor units in a location with special environmental conditions. For those applications, contact your sales representative.

System Operating Conditions

OPERATING RANGE MIN / MAX °F (°C)		
	Cooling	Heating
Outdoor DB	0 ~ 122 (-17 ~ 50)	0 ~ 86 (-17 ~ 30)

NOTE: Reference the product installation instructions for more information.

Metering Devices

The outdoor unit utilizes a capillary tube to manage the connected fan coil's refrigerant flow.

Drain Connections

Install drains to meet the local sanitation codes.

Refrigerant Lines

General refrigerant line sizing:

1. The outdoor units are shipped with a full charge of R410A refrigerant. All charges, line sizing, and capacities are based on runs of 25 ft. (7.6 m). For runs over 25 ft. (7.6 m), review the *Long Line Applications* section for the proper charge adjustments.
2. Refrigerant lines should not be buried in the ground. If it is necessary to bury the lines, do not bury more than 36−in (914 mm). Provide a minimum 6−in (152 mm) vertical rise to the service valves to prevent refrigerant migration.
3. Both lines must be insulated. Use a minimum of 1/2−in. (12.7 mm) thick insulation. Closed−cell insulation is recommended in all long−line applications.
4. Special consideration should be given to isolating the interconnecting tubing from the building structure. Isolate the tubing so vibration or noise is not transmitted into the structure.

Long Line Applications:

1. No change in line sizing is required.
2. Add refrigerant per the **Additional Charge** table.

<table>
<tr><th colspan="7">ADDITIONAL CHARGE</th></tr>
<tr><th rowspan="2">Unit Size</th><th colspan="2">Total Line Length ft. (m)</th><th colspan="4">Additional Charge, oz/ft. FT (m)</th></tr>
<tr><th>Min</th><th>Max</th><th>10-25 (3-9)</th><th>>25-82 (8-25)</th><th>>82-98 (25-30)</th><th>>98-164 (30-50)</th></tr>
<tr><td>9</td><td rowspan="4">10(3)</td><td rowspan="2">82(25)</td><td rowspan="4">None</td><td rowspan="3">0.16</td><td></td><td></td></tr>
<tr><td>12</td><td></td><td></td></tr>
<tr><td>18</td><td>98(30)</td><td>0.16</td><td></td></tr>
<tr><td>24</td><td>164(50)</td><td>0.32</td><td>0.32</td><td>0.32</td></tr>
</table>

WIRING

All wires must be sized per NEC (National Electrical Code) or CEC (Canadian Electrical Code) and local codes. Use Electrical Data table MCA (minimum circuit amps) and MOCP (maximum over current protection) to correctly size the wires and the disconnect fuse or breakers respectively.

Recommended Connection Method for Power and Communication Wiring:

The main power is supplied to the outdoor unit. The field supplied 14/3 stranded wire with ground with a 600 volt insulation rating, power/communication wiring from the outdoor unit to indoor unit consists of four (4) wires and provides the power for the indoor unit.

Two wires are line voltage AC power, one is communication wiring (S) and the other is a ground wire. Wiring between indoor and outdoor unit is polarity sensitive. The use of BX wire is NOT recommended.

If installed in a high Electromagnetic field (EMF) area and communication issues exists, a 14/2 stranded shielded wire can be used to replace L2/N and (S) between outdoor unit and indoor unit landing the shield onto ground in the outdoor unit only.

CAUTION

EQUIPMENT DAMAGE HAZARD

Failure to follow this caution may result in equipment damage or improper operation.

Wires should be sized based on NEC and local codes.

CAUTION

EQUIPMENT DAMAGE HAZARD

Failure to follow this caution may result in equipment damage or improper operation.

Be sure to comply with local codes while running wire from the indoor unit to the outdoor unit.

Every wire must be connected firmly. Loose wiring may cause the terminal to overheat or result in unit malfunction. A fire hazard may also exist. Ensure all wiring is tightly connected.

No wire should touch the refrigerant tubing, compressor or any moving parts.

Disconnecting means must be provided and shall be located within sight and readily accessible from the air conditioner.

Connecting cable with conduit shall be routed through the hole in the conduit panel.

Air Flow Data - Heat Pump

HEAT PUMP	9K (115V)	12K (115V)	9K (208/230V)	12K (208/230V)	18K (208/230V)	24K (208/230V)	30K (208/230V)	36K (208/230V)
Outdoor (CFM)	1,294	1,235	1,294	1,235	1,235	1,765	2,235	2,235

Air Flow Data - Cooling Only

COOLING ONLY	12K (115 V)	12K (208/230V)	18K (208/230V)	24K (208/230V)
Outdoor (CFM)	1059	1059	1235	1765

Sound Data - Heat Pump

HEAT PUMP		9K (115V)	12K (115V)	9K (208/230V)	12K (208/230V)	18K (208/230V)	24K (208/230V)	30K (208/230V)	36K (208/230V)
Outdoor Sound Pressure Level	dB(A)	55	53.5	55	55.5	55	59.5	62.5	65
Outdoor Sound Power Level	dB(A)	64	63.1	64.2	64.5	64.3	69.7	70	71

Sound Data - Cooling Only

COOLING ONLY		12K (115 V)	12K (208/230 V)	18K (208/230 V)	24K (208/230 V)
Outdoor Sound Pressure Level	dB(A)	52	52.5	55.5	59.5
Outdoor Sound Power Level	dB(A)	61.5	62	64	69.7

Manufacturer reserves the right to change, at any time, specifications and designs without notice and without obligations.

Sound Pressure in Octave Bands - Heat Pumps

	Frequency (Hz)	63	125	250	500	1000	2000	4000	8000
9K (115V)	Cooling dB	53.3	58.8	57.2	51.2	48.5	42.0	36.1	31.2
	Heating dB	55.5	58.4	56.6	51.0	48.0	41.8	36.1	31.3
	Indoor dB	44.2	33.4	35.6	36.2	35.0	26.7	20.8	15.2
12K (115V)	Cooling dB	57.6	50.0	54.4	49.6	45.6	40.0	35.6	35.3
	Heating dB	59.8	52.1	55.1	49.2	47.7	42.5	37.4	31.6
	Indoor dB	38.8	34.4	38.3	38.6	37.8	33.1	23.1	14.4
9K (208V/ 230V)	Cooling dB	53.3	58.8	57.2	51.2	48.5	42.0	36.1	31.2
	Heating dB	55.5	58.4	56.6	51.0	48.0	41.8	36.1	31.3
	Indoor dB	38.1	33.6	38.5	37.9	36.2	29.6	20.6	13.6
12K (208V/ 230V)	Cooling dB	57.8	58.2	53.9	49.2	46.0	40.5	37.0	32.8
	Heating dB	60.0	57.9	58.4	52.9	47.5	44.2	41.2	36.7
	Indoor dB	34.4	32.2	37.5	39.4	37.8	31.9	22.5	14.9
18K (208V/ 230V)	Cooling dB	60.9	56.5	54.2	51.0	46.5	41.5	37.0	33.6
	Heating dB	62.5	55.9	52.8	53.9	47.9	44.0	39.4	36.1
	Indoor dB	37.8	36.5	40.6	40.7	40.0	34.9	27.5	17.1
24K (208V/ 230V)	Cooling dB	56.8	60.5	60.1	54.5	50.5	45.7	39.8	34.5
	Heating dB	60.4	59.9	62.7	56.5	52.2	47.2	42.5	39.3
	Indoor dB	39.0	38.7	45.0	43.7	45.5	39.5	33.0	24.4
30K (208V/ 230V)	Cooling dB	43.8	49.7	52.6	56.6	54.8	49.8	46.2	40.2
	Heating dB	39.7	49.6	50.3	53.8	55.9	53.9	49.4	43.7
	Indoor dB	21.0	22.5	30.1	37.5	44.5	44.7	37.0	27.1
36K (208V/ 230V))	Cooling dB	56.8	61.8	61.4	54.4	50.7	45.3	43.2	37.1
	Heating dB	58.4	65	62.9	57	54.9	50.5	46.9	42.3
	Indoor dB	45.5	32.6	31.6	39.1	46.6	47.4	39.0	25.7

Sound Pressure in Octave Bands - Cooling Only

	Frequency (Hz)	63	125	250	500	1000	2000	4000	8000
12 K (115 V)	Cooling dB	49.8	53.3	52.9	48.9	46.1	39.3	32.7	30.3
	Indoor dB	43.6	36	38.7	41.3	40.5	36.9	29.8	20.4
12K (208V/ 230V)	Cooling dB	55	56.2	54.1	52	48.1	42.5	38.7	32.2
	Indoor dB	37.5	32.8	36.7	39.6	38	34.2	26.9	20
18K (208V/ 230V)	Cooling dB	61	56.6	56.3	54	48.1	42.8	38.4	32.5
	Indoor dB	44.1	39.5	43.5	43.1	42.3	37.9	30.4	24.1
24K (208V/ 230V)	Cooling dB	57.3	64.4	59.6	55.4	52.1	46.4	42.1	36.2
	Indoor dB	39.5	38.6	42.8	42.4	42.5	36.6	29.6	24.3

Outdoor Unit Sound Pressure Test Conditions

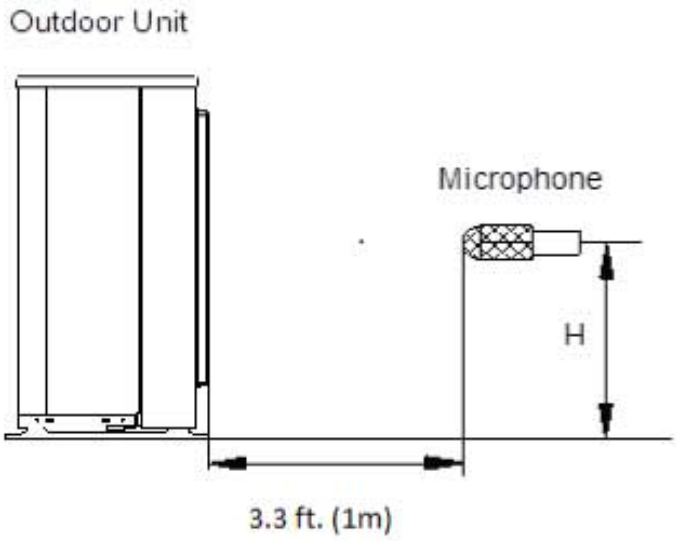

Fig. 11 — Outdoor Unit Sound Pressure Test Conditions

ELECTRICAL DATA - HEAT PUMP

OUTDOOR UNIT		9K (115V)	12K (115V)	9K (208/230V)	12K (208/230V)	18K (208/230V)	24K (208/230V)	30K (208/230V)	36K (208/230V)
Minimum Circuit Ampacity (MCA)	A	20	18.5	12.0	15	15	19	25	28
Recommended Fuse Size	A	20	20	15	15	20	20	30	30
Maximum Overcurrent Protection Ampacity (MOPA)	A	30	25	15	15	20	30	30	35
Voltage-Phase-Frequency		115-1-60		208/230-1-60					
Min – Max Voltage Range*		104-127		187-253					
COOLING									
Running current	(A)	6.3	10.5	3.41	5.2	7	11.12	12.1	18.5
Power consumption	(W)	725	1,212	782	1,176	1,610	2,570	2,700	4,235
Power factor	(%)	79.2	81.8	97.6	97.5	99.1	99.3	96.2	98.7
HEATING									
Running current range	(A)	7.82	10.4	4.1	5.0	7.2	10.25	12.2	18.3
Power consumption	(W)	900	1,172	944	1,131	1,650	2,230	2,700	4,200
Power factor	(%)	80.5	81.5	98	96.3	99.17	99.2	96.3	98.7

ELECTRICAL DATA - COOLING ONLY

OUTDOOR UNIT		12K (115V)	12K (208/230V)	18K (208/230V)	24K (208/230V)
Minimum Circuit Ampacity (MCA)	A	19	9	16	19
Recommended Fuse Size	A	20	10	20	20
Maximum Overcurrent Protection Ampacity (MOPA)	A	30	15	20	30
Voltage-Phase-Frequency		115-1-60	208/230-1-60		
Min – Max Voltage Range*		104-127	187-253		
COOLING					
Running current	(A)	8.9	4.3	7	11.12
Power consumption	(W)	1,020	891	1,600	2,570
Power factor	(%)	98	82	99.2	99.3

*Permissible limits of the voltage range at which the unit will operate satisfactorily.

LEGEND

FLA - Full Load Amps
MCA - Minimum Circuit Amps
MOCP - Maximum Over-Current Protection
RLA - Rated Load Amps

Fan and Motor Specifications - Heat Pump

HEAT PUMP UNIT SIZE			9K (115 V)	12K (115 V)	9K (208/230 V)	12K (208/230 V)	18K (208/230 V)	24K (208/230 V)	30K (208/230 V)	36K (208/230 V)
OUTDOOR FAN	Material		Acrylonitrile Styrene +20%GF							
	Type	-	ZL-421*133*8-3KN	ZL-421*133*8-3KN	ZL-421*133*8-3KN	ZL-421*133*8-3KN	ZL-434*144*8-3KN	ZL-535*133*12-3KFN	ZL-560*139*12-3KN	ZL-560*139*12-3KN
	Diameter	inch	16.58 (421)	16.58 (421)	16.58 (421)	16.58 (421)	17.09 (434)	21.06 (535)	22.05 (560)	22.05 (560)
	Height	inch	5.24 (133)	5.24 (133)	5.24 (133)	5.24 (133)	5.67(144)	5.24 (133)	5.47 (139)	5.47 (139)
OUTDOOR FAN MOTOR	Model	-	ZKFN-34-10-1-3	ZKFN-34-10-1-3	ZKFN-34-10-1-3	ZKFN-34-10-1-3	ZKFN-34-10-1-3	ZKFN-80-8-3	ZKFN-120-8-2	ZKFN-120-8-2
	Volts	V	115	115	208/230	208/230	208/230	208/230	208/230	208/230
	Phase		1	1	1	1	1	1	1	1
	Hertz	Hz	60	60	60	60	60	60	60	60
	FLA	A	0.32	0.73	0.8	0.65	0.7	0.76	1.0	0.5
	Rated HP	HP	0.045	0.045	0.045	0.045	0.045	0.11	0.16	0.16
	Output	W	34	34	34	34	34	80	120	120
	Type	-	DC							
	Insulation class	-	B	B	B	B	B	E	E	E
	Safe class	-	IP24	IP24	IP24	IP24	IP24	IPX4	IPX4	IPX4
	Input	W	99.6	99.6	99.6	99.6	99.6	88	173	173
	Range of current	Amps	0.89±10%	0.89±10%	0.89±10%	0.89±10%	0.89±10%	0.82±20%	1.39±10%	1.39±10%
	Rated current	Amps	0.89	0.89	0.89	0.89	0.89	0.82	1.21	1.21
	Speed	rev/min	800/650/450	780/700/600	800/700/600	780/700/600	950/800/650/450	830/700/550	900/700/500	950/700/500
	Rated RPM	rev/min	800	780	800	780	950	830	900	950
	Max. input	W	100.3	100.3	100.3	100.3	100.3	120	170	170

Fan and Motor Specifications - Cooling Only

COOLING ONLY UNIT SIZE			12K (115 V)	12K (208/230 V)	18K (208/230 V)	24K (208/230 V)
OUTDOOR FAN	Material	-	Acrylonitrile Styrene +20%GF			
	Type	-	ZL-415*129*8-3KN	ZL-415*129*8-3KN	ZL-421*133*8-3KN	ZL-535*133*12-3KFN
	Diameter	inch	16.34 (415)	16.34 (415)	16.58 (421)	21.06 (535)
	Height	inch	5.08 (129)	5.08 (129)	5.24 (133)	5.24 (133)
OUTDOOR FAN MOTOR	Model	-	ZKFN-34-8-1	ZKFN-34-8-1	ZKFN-34-10-1-3	ZKFN-80-8-3
	Volts	V	115	208/230	208/230	208/230
	Phase		1	1	1	1
	Hertz	Hz	60	60	60	60
	FLA	A	0.6	0.6	0.5	0.76
	Rated HP	HP	0.045	0.045	0.045	0.11
	Output	W	34	34	34	80
	Type	-	DC	DC	DC	DC
	Insulation class	-	E	E	B	E
	Safe class	-	IPX4	IPX4	IP24	IPX4
	Input	W	65	65	99.6	88
	Range of current	Amps	0.55±10%	0.55±10%	0.89±10%	0.82±20%
	Rated current	Amps	0.55	0.55	0.89	0.82
	Speed	rev/min	800/700/600	800/700/600	810/700/450	830/700/550
	Rated RPM	rev/min	800	800	810	830
	Max. input	W	103	103	100.3	120

Manufacturer reserves the right to change, at any time, specifications and designs without notice and without obligations.

WIRING DIAGRAMS

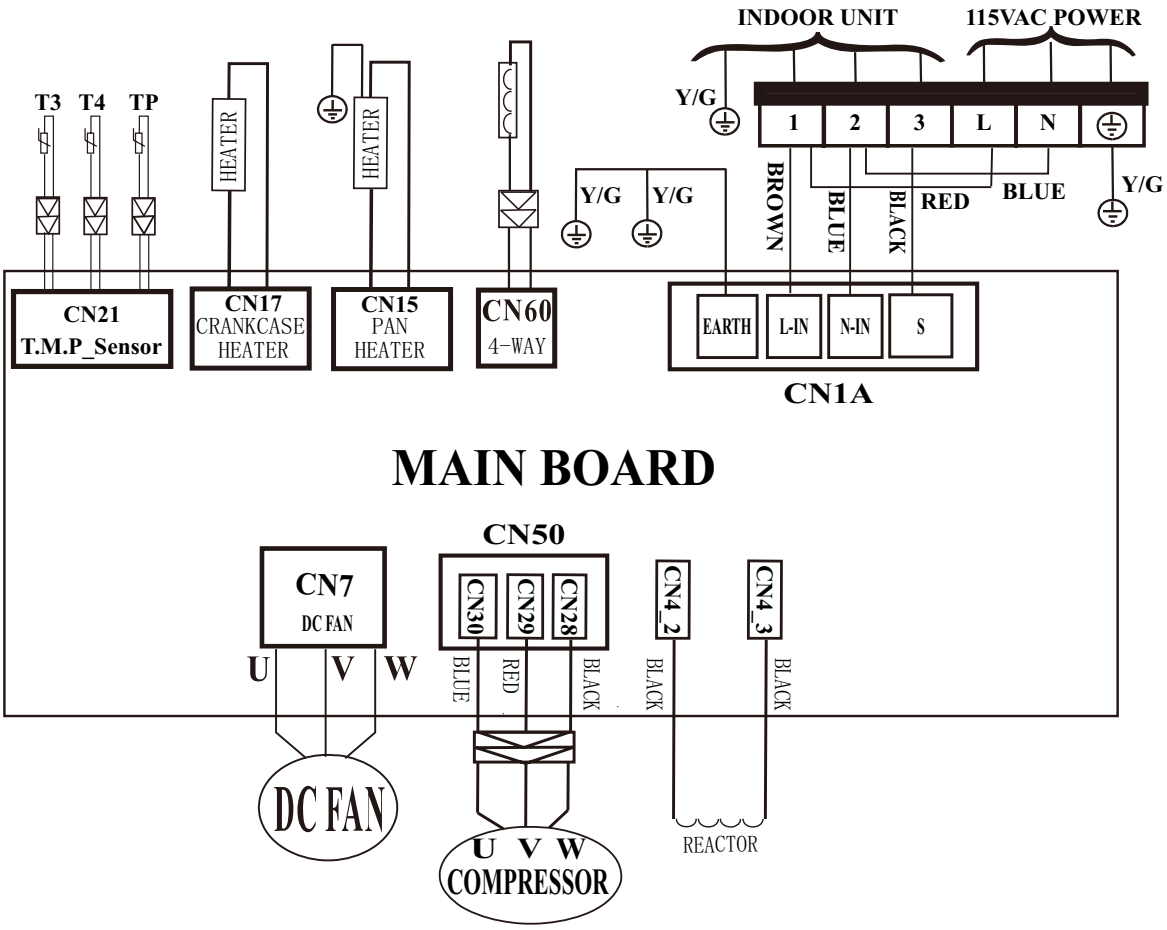

Fig. 12 — Wiring Diagram Size 9K and 12K (115V) - Heat Pump

		CN1A	INPUT	**115V**	AC
		CN4_2/4_3	INPUT	**115V**	AC
		CN7	OUTPUT	0-155V	AC
		CN60	OUTPUT	115V	AC
T3	Condenser TEMP. Sensor	CN21	INPUT	0-5V	DC
T4	Ambient TEMP. Sensor				
TP	Discharge TEMP. Sensor				
		CN15	OUTPUT	115V	AC
		CN17	OUTPUT	115V	AC
		CN50	OUTPUT	0-155V	AC

WIRING DIAGRAMS (CONTINUED)

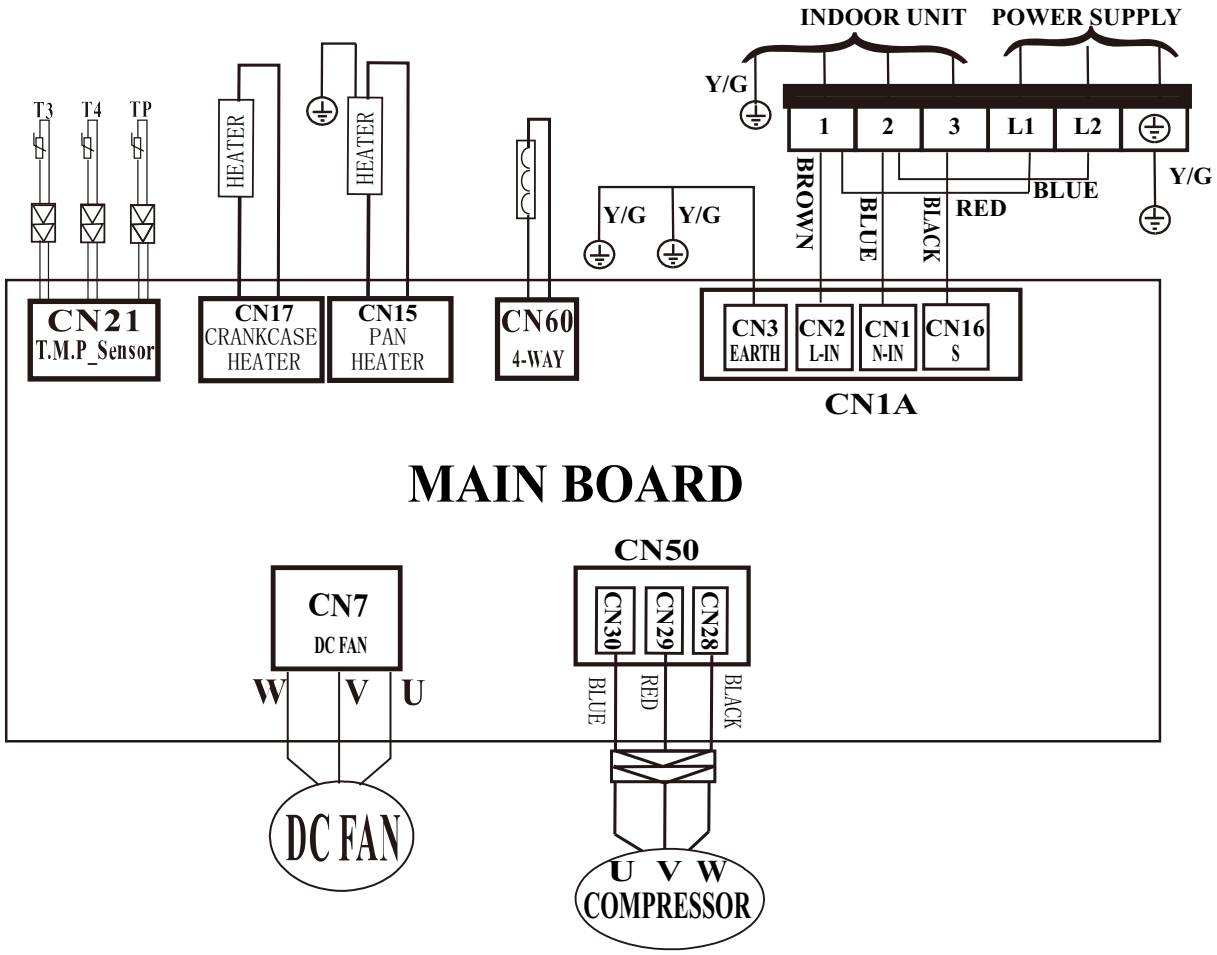

Fig. 13 — Wiring Diagram Sizes 9-18K (208-230V) Heat Pump

		CN1A	INPUT	230V	AC
		CN7	OUTPUT	0-310V	AC
		CN60	OUTPUT	230V	AC
T3	Condenser TEMP. Sensor	CN21	INPUT	0-5V	DC
T4	Ambient TEMP. Sensor				
TP	Discharge TEMP. Sensor				
		CN15	OUTPUT	230V	AC
		CN17	OUTPUT	230V	AC
		CN50	OUTPUT	0-310V	AC

WIRING DIAGRAMS (CONTINUED)

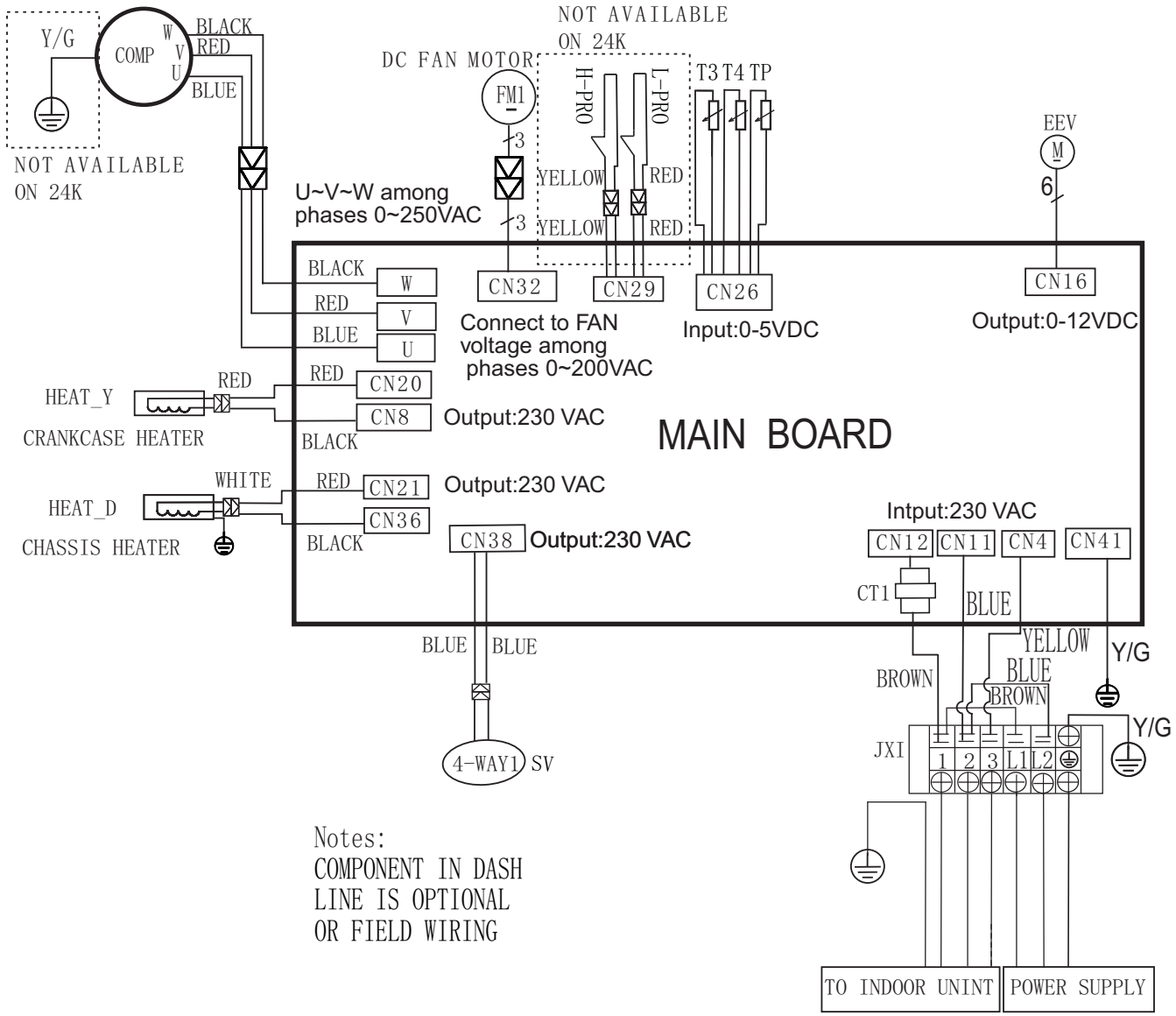

Fig. 14 — Wiring Diagram Size 24K-36K (230V) - Heat Pump

		CN2/7/8	INPUT	230V	AC
		CN414	OUTPUT	0-310V	AC
		CN60	OUTPUT	230V	AC
T3	Condenser TEMP. Sensor	CN17	INPUT	0-5V	DC
T4	Ambient TEMP. Sensor				
TP	Discharge TEMP. Sensor				
		CN16	OUTPUT	230V	AC
		CN19	OUTPUT	230V	AC
		CN27/28/29	OUTPUT	0-310V	AC

WIRING DIAGRAMS (CONTINUED)

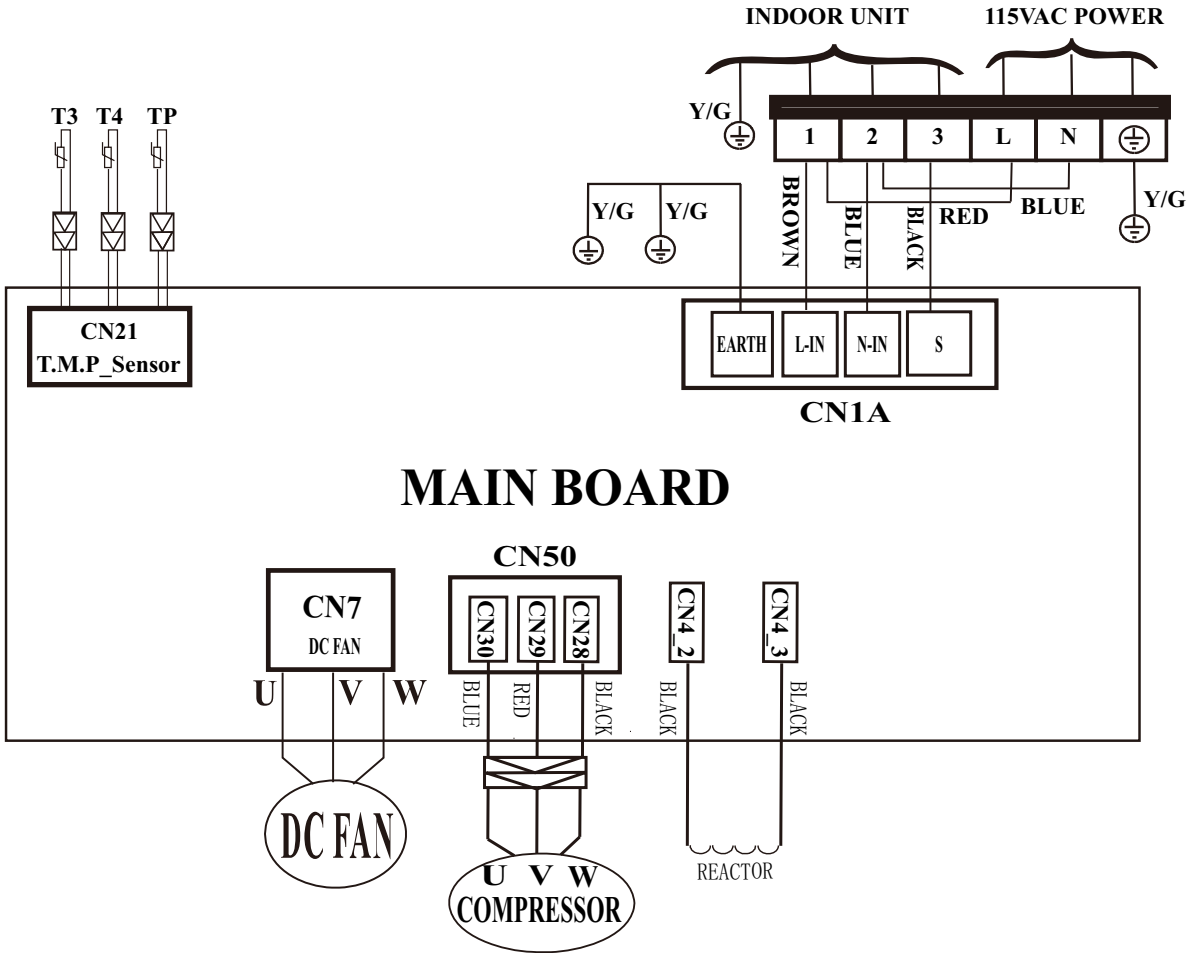

Fig. 14 — Wiring Diagram Size 12K (115V) - Cooling Only

		CN1A	INPUT	115V	AC
		CN4_2/4_3	INPUT	115V	AC
T3	Condenser TEMP. Sensor	CN21	INPUT	0~5V	DC
T4	Ambient TEMP. Sensor				
TP	Discharge TEMP. Sensor				
		CN7	OUTPUT	0~155V	AC
		CN50	OUTPUT	0~155V	AC

WIRING DIAGRAMS (CONTINUED)

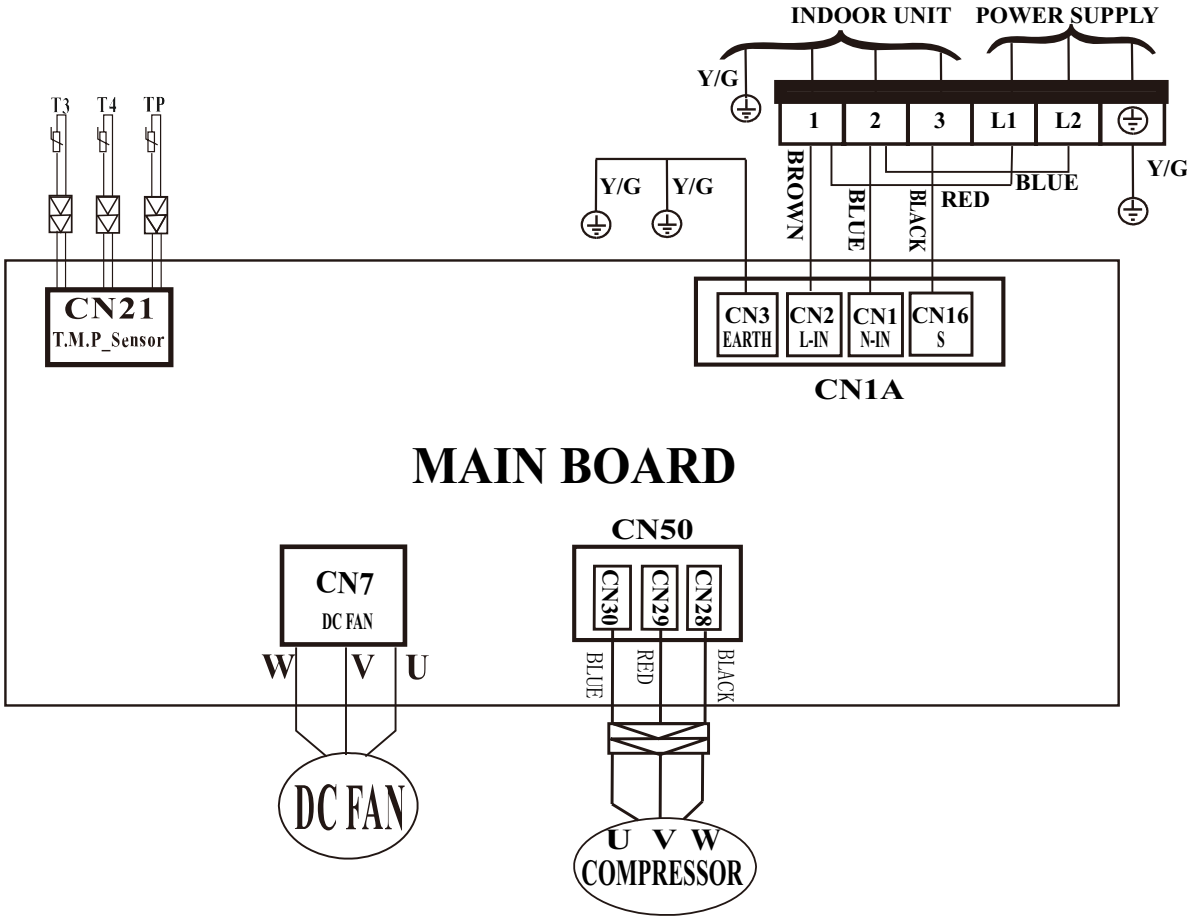

Fig. 15 —Wiring Diagram 12K/18K (208/230V) - Cooling Only

		CN1A	INPUT	230V	AC
		CN7	OUTPUT	0~310V	AC
T3	Condenser TEMP. Sensor	CN21	INPUT	0~5V	DC
T4	Ambient TEMP. Sensor				
TP	Discharge TEMP. Sensor				
		CN50	OUTPUT	0~310V	AC

WIRING DIAGRAMS (CONTINUED)

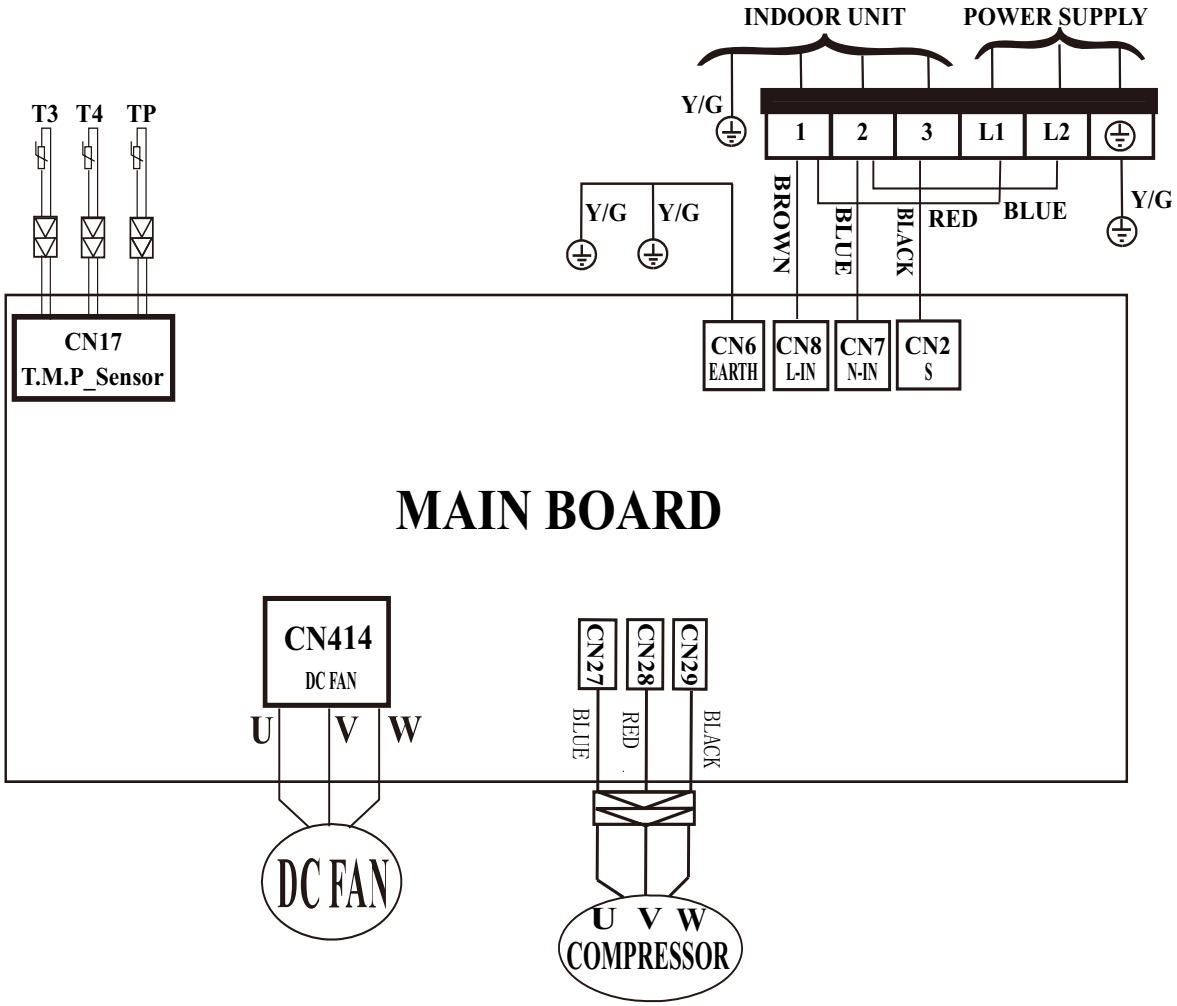

Fig. 16 — Wiring Diagram Size 24K (230V) - Cooling Only

		CN2/7/8	INPUT	230V	AC
		CN414	OUTPUT	0~310V	AC
T3	Condenser TEMP. Sensor	CN17	INPUT	0~5V	DC
T4	Ambient TEMP. Sensor				
TP	Discharge TEMP. Sensor				
		CN27/28/29	OUTPUT	0~310V	AV

GUIDE SPECIFICATIONS

HORIZONTAL DISCHARGE OUTDOOR UNITS

Size Range: 3/4 to 2 Ton Nominal Cooling and 3/4 to 3 Ton Heating Capacity Model Number: **38MHRC**

Part 1 - GENERAL

1.01 System Description

1. Outdoor air-cooled split system compressor sections suitable for on-the-ground, rooftop, wall hung or balcony mounting. Units consist of a rotary compressor, an air-cooled coil, propeller-type draw-through outdoor fan, reversing valve (HP), accumulator (HP units), metering device(s), and a control box. Units discharge air horizontally as shown on the contract drawings. Units function as the outdoor component of an air-to-air heat pump system.
2. Units are to be used in a refrigeration circuit matched to ductless heat pump fan coil units.

1.02 Agency Listings

1. Unit construction complies with ANSI/ASHRAE 15, latest revision, and with the NEC.
2. Units are evaluated in accordance with UL standard 60335-2-40.
3. Units are listed in the CEC directory.
4. Unit cabinet is capable of withstanding 500-hour salt spray test per Federal Test Standard No. 141 (method 6061).
5. Air-cooled condenser coils are leak tested at 550 psig.

1.03 Delivery, Storage, And Handling

Units are shipped in one piece and are stored and handled per unit manufacturer's recommendations.

1.04 Warranty (For Inclusion By Specifying Engineer)

Part 2 - PRODUCTS

2.01 Equipment

A. **General:**

Factory assembled, single piece, air-cooled outdoor unit. Contained within the unit enclosure is all the factory wiring, piping, controls, and the compressor.

B. **Unit Cabinet:**

1. Unit cabinet is constructed of galvanized steel, bonderized and coated with a baked-enamel finish on the inside and outside.
2. Unit access panels is removable with minimal screws and provides full access to the compressor, fan, and control components.
3. The outdoor compartment is isolated and has an acoustic lining to assure quiet operation.

C. **Fans:**

1. Outdoor fans are the direct drive propeller type, and discharges air horizontally. Fans draw air through the outdoor coil.
2. Outdoor fan motors are totally enclosed, single phase motors with class E insulation and permanently lubricated ball bearings. Motor shall be protected by internal thermal overload protection.
3. The shaft has inherent corrosion resistance.
4. Fan blades are non-metallic and statically and dynamically balanced.
5. Outdoor fan openings are equipped with a PVC metal/mesh coated protection grille over the fan.

D. **Compressor:**

1. Compressor is the fully hermetic rotary type.
2. Compressor is equipped with an oil system, operating oil charge, and a motor.
3. Motor is NEMA rated class E, suitable for operation in a refrigerant atmosphere.
4. Compressor assembly is installed on rubber vibration isolators.

E. **Outdoor Coil:**

The coil is constructed of aluminum hydrophilic pre-coated fins mechanically bonded to seamless copper tubes, which are cleaned, dehydrated, and sealed.

F. **Refrigeration Components:**

Refrigerant circuit components include a brass external liquid line service valve with service gage port connections, a suction line service valve with a service gage connection port, service gage port connections on compressor suction and discharge lines with Schrader type fittings with brass caps, accumulator, reversing valve.

G. **Controls and Safeties:**

Operating controls and safeties are factory selected, assembled, and tested. The minimum control functions include the following:

1. Controls:
   - A time delay control sequence is provided standard through the fan coil board
   - Automatic outdoor fan motor protection.
2. Safeties:
   - System diagnostics
   - Compressor motor current and temperature overload protection
   - Outdoor fan failure protection.

H. **Electrical Requirements:**

1. Unit operates on single-phase, 60 Hz power at 115V for unit size 12 Cooling, 9 and 12 Heat Pump and 208/230V for unit sizes 09, 12, 18, 24, 30, and 36 as specified.
2. Unit electrical power has a single point connection.
3. Unit Control voltage to the indoor fan coil is 0-15V DC.
4. All power and control wiring must be installed per NEC and all local electrical codes.
5. The unit has high and low voltage terminal block connections.

© 2023 Carrier. All rights reserved.

Manufacturer reserves the right to change, at any time, specifications and designs without notice and without obligations.