24ABB3
Base™ 13 Air Conditioner with Puron® Refrigerant

Carrier®
Turn to the Experts.℠

Product Data

Puron™
the environmentally sound refrigerant

Carrier's Air Conditioners with Puron® refrigerant provide a collection of features unmatched by any other family of equipment. The 24ABB has been designed utilizing Carrier's Puron refrigerant. The environmentally sound refrigerant allows you to make a responsible decision in the protection of the earth's ozone layer.

As an Energy Star® Partner, Carrier Corporation has determined that this product meets the Energy Star® guidelines for energy efficiency. Refer to the combination ratings in the Product Data for system combinations that meet Energy Star® guidelines.

NOTE: Ratings contained in this document are subject to change at any time. Always refer to the AHRI directory (www.ahridirectory.org) for the most up-to-date ratings information.

INDUSTRY LEADING FEATURES / BENEFITS

Efficiency

- 13 - 14 SEER/10.55 - 12 EER
- Microtube Technology™ refrigeration system
- Indoor air quality accessories available

Sound

- Sound level as low as 75 dBA
- Sound level as low as 74 dBA with accessory sound blanket

Comfort

- System supports Edge® Thermidistat™ or standard thermostat controls

Reliability

- Puron® refrigerant - environmentally sound, won't deplete the ozone layer and low lifetime servce cost.
- Scroll compressor
- Internal pressure relief valve
- Internal thermal overload
- Filter drier
- Balanced refrigeration system for maximum reliability

Durability

WeatherArmor™ protection package:

- Solid, durable sheet metal construction
- Dense wire coil guard available
- Baked-on, complete outer coverage, powder paint

Applications

- Long-line - up to 250 feet (76.20 m) total equivalent length, up to 200 feet (60.96 m) condenser above evaporator, or up to 80 ft. (24.38 m) evaporator above condenser (See Longline Guide for more information.)
- Low ambient (down to -20°F/-28.9°C)) with accessory kit

MODEL NUMBER NOMENCLATURE

1	2	3	4	5	6	7	8	9	10	11	12	13
N	N	A	A	A/N	N	N	N	A/N	A/N	A/N	N	N
2	**4**	**A**	**B**	**B**	**3**	**3**	**6**	**A**	**0**	**0**	**3**	0
Product Series		Product Family	Tier	Major Series	SEER	Cooling Capacity		Grille Variations	Open	Open	Voltage	Series
24=AC		A=RES AC	B=Base	B=Puron	3=13 SEER			A = Dense W = Standard	0=Not Defined	0=Not Defined	3=208/230–1	0 = Original Series

24ABB3

Puron™ the environmentally sound refrigerant

ARI PERFORMANCE CERTIFIED™ ARI Standard 210/240 Unitary Air Conditioners

ISO 9001:2000 QMI REGISTERED

c UL US

Energy ENERGY STAR

This product has been designed and manufactured to meet Energy Star® criteria for energy efficiency when matched with appropriate coil components. However, proper refrigerant charge and proper air flow are critical to achieve rated capacity and efficiency. Installation of this product should follow all manufacturing refrigerant charging and air flow instructions. **Failure to confirm proper charge and air flow may reduce energy efficiency and shorten equipment life.**

STANDARD FEATURES

Feature	**18**	**24**	**30**	**36**	**42**	**48**	**60**
Puron Refrigerant	X	X	X	X	X	X	X
Maximum SEER	14.50	14.25	15.0	14.0	14.0	14.0	13.5
Scroll Compressor	X	X	X	X	X	X	X
Field Installed Filter Drier	X	X	X	X	X	X	X
Front Seating Service Valves	X	X	X	X	X	X	X
Internal Pressure Relief Valve	X	X	X	X	X	X	X
Internal Thermal Overload	X	X	X	X	X	X	X
Long Line capability	X	X	X	X	X	X	X
Low Ambient capability with Kit	X	X	X	X	X	X	X

X = Standard

PHYSICAL DATA

UNIT SIZE–VOLTAGE, SERIES	18–31	24–31	30–31	36–31	42–30	48–31	60–31
Operating Weight lb (kg)	107 (48.5)	110 (49.9)	111 (50.3)	141 (64.0)	190 (86.2)	186 (84.4)	190 (86.2)
Shipping Weight lb (kg)	130 (59.0)	134 (60.8)	136 (61.7)	170 (77.1)	218 (98.9)	224 (101.6)	226 (102.5)
Compressor Type	Scroll						
REFRIGERANT	Puron® (R–410A)						
Control	TXV (Puron® Hard Shutoff)						
Charge lb (kg)	3.50 (1.59)	3.80 (1.72)	4.10 (1.86)	5.34 (2.42)	5.84 (2.65)	7.00 (3.18)	8.19 (3.71)
COND FAN	Propeller Type, Direct Drive						
Air Discharge	Vertical						
Air Qty (CFM)	1792	2218	2218	2954	3167	3365	3129
Motor HP	1/12	1/10	1/10	1/4	1/5	1/4	1/4
Motor RPM	1100	1100	1100	1100	1100	1100	800
COND COIL							
Face Area (Sq ft)	8.4	8.4	9.80	13.13	17.25	19.40	12.93
Fins per In.	20	25	25	25	25	25	20
Rows	1	1	1	1	1	1	2
Circuits	3	3	3	3	4	5	5
VALVE CONNECT. (In. ID)							
Vapor	3/4	3/4	3/4	7/8	7/8	7/8	7/8
Liquid	3/8						
REFRIGERANT TUBES (In. OD)							
Rated Vapor*	3/4	3/4	3/4	7/8	7/8	7/8	1–1/8
Max Liquid Line†	3/8						

* Units are rated with 25 ft (7.6 m) of lineset length. See Vapor Line Sizing and Cooling Capacity Loss table when using other sizes and lengths of lineset.
Note: See unit Installation Instruction for proper installation.

† See *Liquid Line Sizing For Cooling Only Systems with Puron Refrigerant* tables.

REFRIGERANT PIPING LENGTH LIMITATIONS

Liquid Line Sizing and Maximum Total Equivalent Lengths† for Cooling Only Systems with Puron® Refrigerant:

The maximum allowable length of a residential split system depends on the liquid line diameter and vertical separation between indoor and outdoor units.

See Table below for liquid line sizing and maximum lengths :

Maximum Total Equivalent Length
Outdoor Unit BELOW Indoor Unit

Size	Liquid Line Connection	Liquid Line Diam. w/ TXV	AC with Puron Refrigerant Maximum Total Equivalent Length†: Outdoor unit BELOW Indoor Vertical Separation ft (m)								
			0–5 (0–1.5)	6–10 (1.8–3.0)	11–20 (3.4–6.1)	21–30 (6.4–9.1)	31–40 (9.4–12.2)	41–50 (12.5–15.2)	51–60 (15.5–18.3)	61–70 (18.6–21.3)	71–80 (21.6–24.4)
18000 AC with Puron	3/8	1/4	150	150	125	100	100	75	– –	– –	– –
		5/16	250*	250*	250*	250*	250*	250*	250*	225*	150
		3/8	250*	250*	250*	250*	250*	250*	250*	250*	250*
24000 AC with Puron	3/8	1/4	75	75	75	50	50	– –	– –	– –	– –
		5/16	250*	250*	250*	250*	250*	225*	175	125	100
		3/8	250*	250*	250*	250*	250*	250*	250*	250*	250*
30000 AC with Puron	3/8	1/4	30	– –	– –	– –	– –	– –	– –	– –	– –
		5/16	175	225*	200	175	125	100	75	– –	– –
		3/8	250*	250*	250*	250*	250*	250*	250*	250*	250*
36000 AC with Puron	3/8	5/16	175	150	150	100	100	100	75	– –	– –
		3//8	250*	250*	250*	250*	250*	250*	250*	250*	250*
42000 AC with Puron	3/8	5/16	125	100	100	75	75	50	– –	– –	– –
		3/8	250*	250*	250*	250*	250*	250*	250*	250*	150
48000 AC with Puron	3/8	3/8	250*	250*	250*	250*	250*	250*	230	160	– –
60000 AC with Puron	3/8	3/8	250*	250*	250*	225*	190	150	110	– –	– –

*** Maximum actual length not to exceed 200 ft (61 m)**

† Total equivalent length accounts for losses due to elbows or fitting. See the Long Line Guideline for details.

– – = outside acceptable range

Maximum Total Equivalent Length
Outdoor Unit ABOVE Indoor Unit

Size	Liquid Line Connection	Liquid Line Diam. w/ TXV	AC with Puron Refrigerant Maximum Total Equivalent Length†: Outdoor unit ABOVE Indoor Vertical Separation ft (m)							
			25 (7.6)	26–50 (7.9–15.2)	51–75 (15.5–22.9)	76–100 (23.2–30.5)	101–125 (30.8–38.1)	126–150 (38.4–45.7)	151–175 (46.0–53.3)	176–200 (53.6–61.0)
18000 AC with Puron	3/8	1/4	175	250*	250*	250*	250*	250*	250*	250*
		5/16	250*	250*	250*	250*	250*	250*	250*	250*
		3/8	250*	250*	250*	250*	250*	250*	250*	250*
24000 AC with Puron	3/8	1/4	100	125	175	200	225*	250*	250*	250*
		5/16	250*	250*	250*	250*	250*	250*	250*	250*
		3/8	250*	250*	250*	250*	250*	250*	250*	250*
30000 AC with Puron	3/8	1/4	30	– –	– –	– –	– –	– –	– –	– –
		5/16	250*	250*	250*	250*	250*	250*	250*	250*
		3/8	250*	250*	250*	250*	250*	250*	250*	250*
36000 AC with Puron	3/8	5/16	225*	250*	250*	250*	250*	250*	250*	250*
		3/8	250*	250*	250*	250*	250*	250*	250*	250*
42000 AC with Puron	3/8	5/16	175	200	250*	250*	250*	250*	250*	250*
		3/8	250*	250*	250*	250*	250*	250*	250*	250*
48000 AC with Puron	3/8	3/8	250*	250*	250*	250*	250*	250*	250*	250*
60000 AC with Puron	3/8	3/8	250*	250*	250*	250*	250*	250*	250*	250*

*** Maximum actual length not to exceed 200 ft (61 m)**

† Total equivalent length accounts for losses due to elbows or fitting. See the Long Line Guideline for details.

– – = outside acceptable range

REFRIGERANT CHARGE ADJUSTMENTS

Liquid Line Size	Puron Charge oz/ft
3/8	0.60 (Factory charge for lineset = 9 oz)
5/16	0.40
1/4	0.27

Units are factory charged for 15 ft (4.6 m) of 3/8" liquid line. The factory charge for 3/8" lineset 9 oz. When using other length or diameter liquid lines, charge adjustments are required per the chart above.

Charging Formula:

[(Lineset oz/ft x total length) – (factory charge for lineset)] = charge adjustment

Example 1: System has 15 ft of line set using existing 1/4" liquid line. What charge adjustment is required?

Formula: (.27 oz/ft x 15ft) – (9 oz) = (-4.95) oz.

Net result is to remove 4.95 oz of refrigerant from the system

Example 2: System has 45 ft of existing 5/16" liquid line. What is the charge adjustment?

Formula: (.40 oz/ft. x 45ft) – (9 oz.) = 9 oz.

Net result is to add 9 oz of refrigerant to the system

LONG LINE APPLICATIONS

An application is considered Long Line, when the refrigerant level in the system requires the use of accessories to maintain acceptable refrigerant management for systems reliability. See Accessory Usage Guideline table for required accessories. Defining a system as long line depends on the liquid line diameter, actual length of the tubing, and vertical separation between the indoor and outdoor units.

For Air Conditioner systems, the chart below shows when an application is considered Long Line.

AC WITH PURON® REFRIGERANT LONG LINE DESCRIPTION ft (m)
Beyond these lengths, long line accessories are required

Liquid Line Size	Units On Same Level	Outdoor Below Indoor	Outdoor Above Indoor
1/4	No accessories needed within allowed lengths	No accessories needed within allowed lengths	175 (53.3)
5/16	120 (36.6)	50 (15.2)	120 (36.6)
3/8	80 (24.4)	35 (10.7)	80 (24.4)

Note: See Long Line Guideline for details

VAPOR LINE SIZING AND COOLING CAPACITY LOSS

Acceptable vapor line diameters provide adequate oil return to the compressor while avoiding excessive capacity loss. The suction line diameters shown in the chart below are acceptable for AC systems with Puron refrigerant:

Unit Nominal Size (Btuh)	Maximum Liquid Line Diameters (In. OD)	Vapor Line Diameters (In. OD)	Cooling Capacity Loss (%) Total Equivalent Line Length ft. (m)								
			26–50 (7.9–15.2)	51–80 (15.5–24.4)	81–100 (24.7–30.5)	101–125 (30.8–38.1)	126–150 (38.4–45.7)	151–175 (46.0–53.3)	176–200 (53.6–61.0)	201–225 (61.3–68.6)	226–250 (68.9–76.2)
18000 1 Stage AC with Puron	3/8	1/2	1	2	3	5	6	7	8	9	11
		5/8	0	1	1	1	2	2	2	3	3
		3/4	0	0	0	0	1	1	1	1	1
24000 1 Stage AC with Puron	3/8	5/8	0	1	2	2	3	3	4	5	5
		3/4	0	0	1	1	1	1	1	2	2
		7/8	0	0	0	0	0	1	1	1	1
30000 1 Stage AC with Puron	3/8	5/8	1	2	3	3	4	5	6	7	8
		3/4	0	0	1	1	1	2	2	2	3
		7/8	0	0	0	0	1	1	1	1	1
36000 1 Stage AC with Puron	3/8	5/8	1	2	4	5	6	8	9	10	12
		3/4	0	1	1	2	2	3	3	4	4
		7/8	0	0	0	1	1	1	1	2	2
42000 1 Stage AC with Puron	3/8	3/4	0	1	2	2	3	4	4	5	6
		7/8	0	0	1	1	1	2	2	2	3
		1 1/8	0	0	0	0	0	0	0	0	0
48000 1 Stage AC with Puron	3/8	3/4	0	1	2	3	4	5	5	6	7
		7/8	0	0	1	1	2	2	2	3	3
		1 1/8	0	0	0	0	0	0	0	1	1
60000 1 Stage AC with Puron	3/8	3/4	1	2	4	5	6	7	9	10	11
		7/8	0	1	2	2	3	4	4	5	5
		1 1/8	0	0	0	1	1	1	1	1	1

Applications in this area may be long line and may have height restrictions. See the *Residential Piping and Long Line Guideline*.

ACCESSORY THERMOSTATS

THERMOSTAT / SUBBASE PKG.	DESCRIPTION
TP–PRH01–A	Programmable Thermidistat
TP–NRH01–A	Non–programmable Thermidistat
TP–PAC01	Performance Series Programmable AC Stat
TP–NAC01	Performance Series Non–programmable AC Stat
TC–PAC01	Comfort Series Programmable AC Stat
TC–NAC01	Comfort Series Non–programmable AC Stat
TB–PAC01	Base Series Programmable AC Stat
TB–NAC01	Base Series Non–programmable AC Stat
TSTATCCSEN01–B	Outdoor Air Temperature Sensor
TSTATXXBBP01	Backplate for Builder's Thermostat
TSTATXXNBP01	Backplate for Non–Programmable Thermostat
TSTATXXPBP01	Backplate for Programmable Thermostat
TSTATXXCNV10	Thermostat Conversion Kit (4 to 5 wires) – 10 Pack

ACCESSORIES

KIT NUMBER	DESCRIPTION	Size – Voltage & Series						
		18–31	24–31	30–31	36–31	42–30	48–31	60–31
KAAFT0101AAA	FREEZE THERMOSTAT	X	X	X	X	X	X	X
KAATD0101TDR	TIME DELAY RELAY	X	X	X	X	X	X	X
KSALA0301410	LOW AMBIENT PSW	X	X	X	X	X	X	X
KSALA0601AAA†	MOTORMASTER 230V	X	X	X	X	X	X	X
HC32GE234	MOTOR FAN BALL BEARING	X						
HC34GE239	MOTOR FAN BALL BEARING		X	X				
HC40GE226	MOTOR FAN BALL BEARING				X		X	
HC38GE219	MOTOR FAN BALL BEARING					X		
HC40GE225	MOTOR FAN BALL BEARING							X
KSAHS1701AAA	HARD START (CAP / RELAY)	X	X	X	X	X	X	X
KSACY0101AAA	CYCLE PROTECTOR	X	X	X	X	X	X	X
KSASF0101AAA	SUPPORT FEET	X	X	X	X	X	X	X
KAACS0201PTC	START ASSIST PTC	X	X	X	X	X	X	X
KAALS0201LLS	LIQUID LINE SOLENOID	X	X	X	X	X	X	X
KAAWS0101AAA	WINTER START	X	X	X	X	X	X	X
KAACH1201AAA	CRANKCASE HTR					X	X	X
KAACH1401AAA	CRANKCASE HTR	X	X	X	X			
KSATX0201PUR	TXV PURON HSO	X	X	X				
KSATX0301PUR	TXV PURON HSO				X	X		
KSATX0401PUR	TXV PURON HSO						X	
KSATX0501PUR	TXV PURON HSO							X
KSASH0601COP	SOUND HOOD	X	X	X	X	X	X	
KSASH2101COP	SOUND HOOD							X
KAALP0401PUR	LOW PRESSURE SWITCH	X	X	X	X	X	X	X
KAAHI0501PUR	HIGH PRESSURE SWITCH	X	X	X	X	X	X	X

† Required accessories include ball bearing fan motor, compressor start assist (CAP / Relay), crankcase heater, evaporator freeze stat, hard shut–off TXV.
X = Accessory

ACCESSORY USAGE GUIDELINE

ACCESSORY	REQUIRED FOR LOW–AMBIENT COOLING APPLICATIONS (Below 55°F/12.8°C)	REQUIRED FOR LONG LINE APPLICATIONS*	REQUIRED FOR SEA COAST APPLICATIONS (Within 2 miles/3.22 km)
Ball Bearing Fan Motor	Yes†	No	No
Compressor Start Assist Capacitor and Relay	Yes	Yes	No
Crankcase Heater	Yes	Yes	No
Evaporator Freeze Thermostat	Yes	No	No
Hard Shut–Off TXV	Yes	Yes	Yes
Liquid Line Solenoid Valve	No	No	No
Motor Master® Control or Low–ambient Pressure Switch	Yes	No	No
Support Feet	Recommended	No	Recommended
Winter Start Control	Yes #	No	No

* For tubing line sets between 80 and 200 ft. (24.38 and 60.96 m) and/or 20 ft. (6.09 m) vertical differential, refer to Residential Split–System Longline Application Guideline.

† Required for Low–Ambient Controller (full modulation feature) MotorMaster® Control.

\# Required if Low Pressure Switch is factory or field installed.

24ABB3

Accessory Description and Usage (Listed Alphabetically)

1. Ball-Bearing Fan Motor

A fan motor with ball bearings which permits speed reduction while maintaining bearing lubrication.

Usage Guideline:

Required on all units when MotorMaster® is used.

2. Compressor Start Assist - Capacitor and Relay

Start capacitor and relay gives a ”hard” boost to compressor motor at each start up.

Usage Guideline:

Required for reciprocating compressors in the following applications:

Long line

Low ambient cooling

Hard shut off expansion valve on indoor coil

Liquid line solenoid on indoor coil

Required for single-phase scroll compressors in the following applications:

Long line

Low ambient cooling

Suggested for all compressors in areas with a history of low voltage problems.

3. Compressor Start Assist — PTC Type

Solid state electrical device which gives a ”soft” boost to the compressor at each start-up.

Usage Guideline:

Suggested in installations with marginal power supply.

4. Crankcase Heater

An electric resistance heater which mounts to the base of the compressor to keep the lubricant warm during off cycles. Improves compressor lubrication on restart and minimizes the chance of liquid slugging.

Usage Guideline:

Required in low ambient cooling applications.

Required in long line applications.

Suggested in all commercial applications.

5. Cycle Protector

The cycle protector is designed to prevent compressor short cycling. This control provides an approximate 5-minute delay after power to the compressor has been interrupted for any reason, including power outage, protector control trip, thermostat jiggling, or normal cycling.

6. Evaporator Freeze Thermostat

An SPST temperature-actuated switch that stops unit operation when evaporator reaches freeze-up conditions.

Usage Guideline:

Required when low ambient kit has been added.

7. Low-Ambient Pressure Switch Kit

A long life pressure switch which is mounted to outdoor unit service valve. It is designed to cycle the outdoor fan motor in order to maintain head pressure within normal operating limits (approximately 100 psig to 225 psig). The control will maintain working head pressure at low-ambient temperatures down to 0°F (-18°C) when properly installed.

Usage Guideline:

A Low-Ambient Pressure Switch or MotorMaster® Low-Ambient Controller must be used when cooling operation is used at outdoor temperatures below 55°F (12.8°C).

8. MotorMaster® Low-Ambient Controller

A fan-speed control device activated by a temperature sensor, designed to control condenser fan motor speed in response to the saturated, condensing temperature during operation in cooling mode only. For outdoor temperatures down to -20°F (-28.9°C), it maintains condensing temperature at 100°F ±10°F (37.8°C ± 5.5°C).

Usage Guideline:

A MotorMaster® Low Ambient Controller or Low-Ambient Pressure Switch must be used when cooling operation is used at outdoor temperatures below 55°F (12.8°C).

Suggested for all commercial applications.

9. Outdoor Air Temperature Sensor

Designed for use with Carrier Thermostats listed in this publication. This device enables the thermostat to display the outdoor temperature. This device also

is required to enable special thermostat features such as auxiliary heat lock out.

Usage Guideline:

Suggested for all Carrier thermostats listed in this publication.

Accessory Description and Usage (Listed Alphabetically) (Continued)

10. Sound Hood

Wraparound sound reducing cover for the compressor. Reduces the sound level by about 2 dBA.

Usage Guideline:

Suggested when unit is installed closer than 15 ft (4.57 m) to quiet areas, bedrooms, etc.

Suggested when unit is installed between two houses less than 10 ft (3.05 m) apart.

11. Support Feet

Four stick-on plastic feet that raise the unit 4 in. (101.6 mm) above the mounting pad. This allows sand, dirt, and other debris to be flushed from the unit base, minimizing corrosion.

Usage Guideline:

Suggested in the following applications:

Coastal installations.

Windy areas or where debris is normally circulating.

Rooftop installations.

For improved sound ratings.

12. Thermostatic Expansion Valve (TXV)

A modulating flow-control valve which meters refrigerant liquid flow rate into the evaporator in response to the superheat of the refrigerant gas leaving the evaporator.

Kit includes valve, adapter tubes, and external equalizer tube. Hard shut off types are available.

NOTE: When using a hard shut off TXV with single phase reciprocating compressors, a Compressor Start Assist Capacitor and Relay is required.

Usage Guideline:

Required to achieve ARI ratings in certain equipment combinations. Refer to combination ratings.

Hard shut off TXV or LLS required in air conditioner long line applications.

Required for use on all zoning systems.

13. Time-Delay Relay

An SPST delay relay which briefly continues operation of indoor blower motor to provide additional cooling after the compressor cycles off.

NOTE: Most indoor unit controls include this feature. For those that do not, use the guideline below.

Usage Guideline:

For improved efficiency ratings for certain combinations of indoor and outdoor units. Refer to ARI Unitary Directory.

14. Winter Start Control

This control is designed to alleviate nuisance opening of the low-pressure switch by bypassing it for the first 3 minutes of operation.

ELECTRICAL DATA

UNIT SIZE– VOLTAGE, SERIES	V/PH	OPER VOLTS*		COMPR		FAN	MCA	MIN WIRE SIZE†	MIN WIRE SIZE†	MAX LENGTH ft. (m)‡	MAX LENGTH ft. (m)‡	MAX FUSE** or CKT BRK AMPS
		MAX	MIN	LRA	RLA	FLA		60° C	75° C	60° C	75° C	
18–31	208/230/1	253	197	48.0	9.0	0.5	11.8	14	14	66 (20.1)	63 (21.0)	15
24–31				58.3	13.5	0.77	17.6	14	14	44 (13.4)	42 (12.8)	25
30–31				64.0	12.8	0.77	16.8	14	14	46 (14.0)	44 (13.4)	25
36–31				77.0	14.1	1.4	20.5	12	12	61 (18.6)	58 (17.7)	30
42–30				112.0	17.9	1.1	23.5	12	12	53 (16.2)	51 (15.5)	40
48–31				109.0	19.9	1.4	26.2	10	10	76 (23.2)	72 (22.2)	40
60–31				134.0	26.4	1.2	34.2	8	10	62 (18.9)	55 (16.8)	50

* Permissible limits of the voltage range at which the unit will operate satisfactorily

† If wire is applied at ambient greater than 30°C , consult table 310–16 of the NEC (NFPA 70). The ampacity of non–metallic–sheathed cable (NM), trade name ROMEX, shall be that of 60°C conditions, per the NEC (NFPA 70) Article 336–26. If other than uncoated (no–plated), 60 or 75°C insulation, copper wire (solid wire for 10 AWG or smaller, stranded wire for larger than 10 AWG) is used, consult applicable tables of the NEC (NFPA 70).

‡ Length shown is as measured one way along wire path between unit and service panel for voltage drop not to exceed 2%.

** Time–Delay fuse.

FLA – Full Load Amps
LRA – Locked Rotor Amps
MCA – Minimum Circuit Amps
RLA – Rated Load Amps
NOTE: Control circuit is 24–V on all units and requires external power source. Copper wire must be used from service disconnect to unit. All motors/compressors contain internal overload protection.

Complies with 2007 requirements of ASHRAE Standards 90.1

A-WEIGHTED SOUND POWER LEVEL

UNIT SIZE – VOLTAGE, SERIES	STANDARD RATING (dBA)	TYPICAL OCTAVE BAND SPECTRUM (dBA, without tone adjustment)						
		125	250	500	1000	2000	4000	8000
18–31	72	53.5	59.5	63.5	67.0	63.5	59.0	52.5
24–31	76	55.0	61.5	67.0	71.5	69.0	61.0	55.0
30–31	74	55.0	63.5	68.5	68.5	65.5	61.0	54.0
36–31	75	59.5	63.0	68.5	70.0	65.5	61.5	53.5
42–30	78	57.5	65.0	71.0	73.0	70.5	67.5	62.5
48–31	80	58.5	67.5	73.5	75.0	70.5	67.5	64.5
60–31	78	59.0	67.5	71.5	73.5	69.0	66.0	63.5

NOTE: Tested in accordance with ARI Standard 270–2008 (not listed in AHRI).

A-WEIGHTED SOUND POWER LEVEL WITH SOUND SHIELD

UNIT SIZE – VOLTAGE, SERIES	STANDARD RATING (dBA)	TYPICAL OCTAVE BAND SPECTRUM (dBA, without tone adjustment)						
		125	250	500	1000	2000	4000	8000
18–31	71	55.5	60.5	64.0	66.0	63.0	58.5	52.0
24–31	74	55.5	60.5	68.5	70.0	67.0	61.0	53.6
30–31	73	55.5	64.0	68.0	67.0	64.0	60.0	52.5
36–31	74	59.5	63.0	68.0	69.5	65.0	60.5	50.5
42–30	77	57.5	65.0	70.5	72.0	70.0	67.0	62.0
48–31	79	60.5	67.5	73.5	74.5	71.0	68.0	63.5
60–31	78	59.0	68.0	70.5	72.5	68.0	67.0	63.0

NOTE: Tested in accordance with ARI Standard 270–2008 (not listed in AHRI).

CHARGING SUBCOOLING (TXV-TYPE EXPANSION DEVICE)

UNIT SIZE– VOLTAGE & SERIES	REQUIRED SUBCOOLING °F (°C)
18–31	10 (5.6)
24–31	10 (5.6)
30–31	10 (5.6)
36–31	14 (7.8)
42–30	10 (5.6)
48–31	15 (8.3)
60–31	13 (7.2)

DIMENSIONS - ENGLISH

UNIT	SERIES	ELECTRICAL CHARACTERISTICS				A	B	C	D	E	F	G	K	L	M	N	P	OPERATING WEIGHT (lbs)	SHIPPING WEIGHT (lbs)	SHIPPING DIMENSIONS (L x W x H)
		208-230-1-60	230-1-60	208/230-3-60	460-3-60															
24ABB318	1	X	O	O	O	23 1/2"	25 5/16"	3 3/4"	3/4"	4 7/16"	18 1/16"	7 13/16"	2 13/16"	1/2"	16 1/2"	15"	12"	107	130	24 1/4" X 27 3/8" X 33 1/2"
24ABB324	1	X	O	O	O	23 1/2"	25 5/16"	3 3/4"	3/4"	4 7/16"	18 1/16"	7 13/16"	2 13/16"	1/2"	16 1/2"	15"	12"	110	134	24 1/4" X 27 3/8" X 33 1/2"
24ABB330	1	X	O	O	O	23 1/2"	28 11/16"	3 3/4"	3/4"	4 7/16"	18 1/16"	7 13/16"	2 13/16"	1/2"	16 1/2"	15"	14"	111	136	24 1/4" X 27 3/8" X 33 1/2"
24ABB336	1	X	O	O	O	25 3/4"	32 5/16"	3 7/8"	7/8"	4 7/16"	21 1/4"	9 1/8"	2 15/16"	5/8"	14 1/4"	10 1/2"	16"	141	170	26 7/8" X 30 1/16" X 35 15/16"
24ABB342	0	X	O	O	O	31 3/16"	32 5/16"	3 7/8"	7/8"	6 9/16"	24 11/16"	9 1/8"	2 15/16"	5/8"	15 3/4"	16 1/4"	13 3/4"	190	218	32 3/8" X 35 1/2" X 35 15/16"
24ABB348	1	X	O	O	O	31 3/16"	35 3/4"	3 7/8"	7/8"	6 9/16"	24 11/16"	9 1/8"	2 15/16"	5/8"	16 3/8"	15 3/8"	15 1/4"	186	224	32 3/8" X 35 1/2" X 39 3/8"
24ABB360	1, 2	X	O	O	O	31 3/16"	25 1/2"	3 7/8"	7/8"	6 9/16"	24 11/16"	9 1/8"	2 15/16"	5/8"	14 1/8"	15 3/8"	11 3/8"	190	226	32 3/8" X 35 1/2" X 32 9/16"

X = YES
O = NO

NOTES:

1. ALLOW 30" CLEARANCE TO SERVICE SIDE OF UNIT, 48" ABOVE UNIT, 6" ON ONE SIDE, 12" ON REMAINING SIDE, AND 24" BETWEEN UNITS FOR PROPER AIRFLOW.
2. MINIMUM OUTDOOR OPERATING AMBIENT IN COOLING MODE IS 55°F, MAX. 125°F.
3. SERIES DESIGNATION IS THE 13TH POSITION OF THE UNIT MODEL NUMBER.
4. CENTER OF GRAVITY ⊕.
5. ALL DIMENSIONS ARE IN "INCHES" UNLESS NOTED.

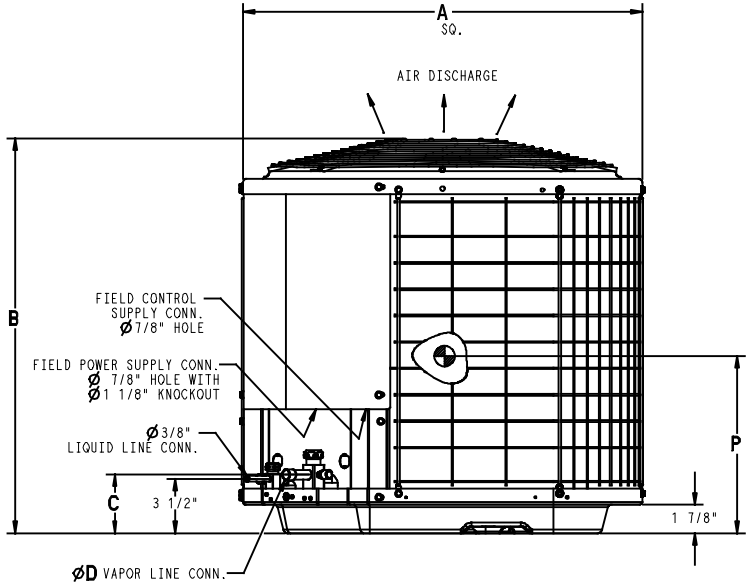

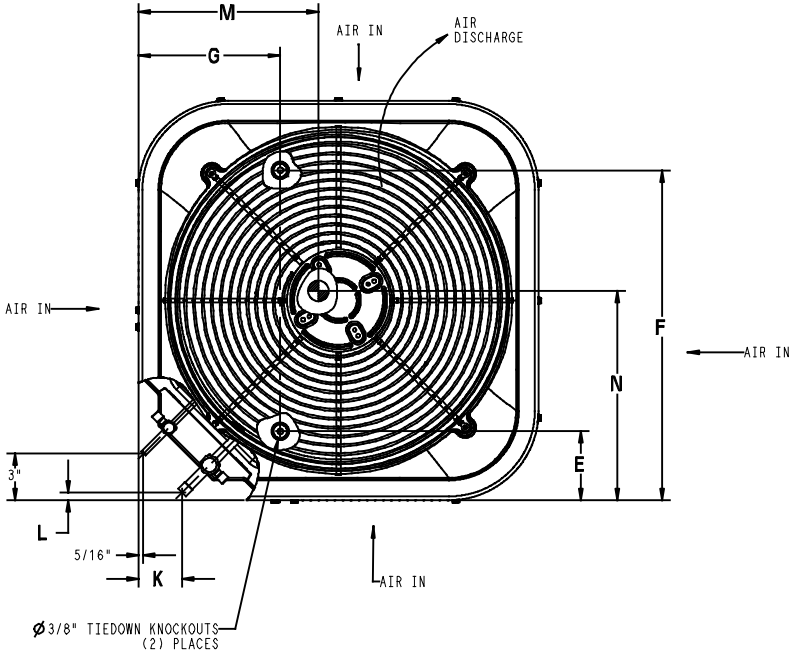

UNIT SIZE	MINIMUM MOUNTING PAD DIMENSIONS
18,24,30	23 1/2" X 23 1/2"
36	26" X 26"
42,48,60	31 1/2" X 31 1/2"
-	35" X 35"

DIMENSIONS - SI

UNIT	SERIES	ELECTRICAL CHARACTERISTICS				A	B	C	D	E	F	G	K	L	M	N	P	OPERATING WEIGHT (Kgs)	SHIPPING WEIGHT (Kgs)	SHIPPING DIMENSIONS (L x W x H)
24ABB318	1	X	O	O	O	596.9	643.0	95.2	19.0	112.7	458.8	198.4	71.4	12.7	419.1	381.0	304.8	48.5	59.0	616.0 X 695.3 X 850.9
24ABB324	1	X	O	O	O	596.9	643.0	95.2	19.0	112.7	458.8	198.4	71.4	12.7	419.1	381.0	304.8	49.9	60.8	616.0 X 695.3 X 850.9
24ABB330	1	X	O	O	O	596.9	728.7	95.2	19.0	112.7	458.8	198.4	71.4	12.7	419.1	381.0	355.6	50.3	61.7	616.0 X 695.3 X 850.9
24ABB336	1	X	O	O	O	654.0	820.8	98.4	22.2	112.7	539.8	231.8	74.6	15.9	362.0	266.7	406.4	64.0	77.1	682.6 X 763.6 X 912.8
24ABB342	0	X	O	O	O	792.2	820.8	98.4	22.2	166.7	627.1	231.8	74.6	15.9	400.0	412.8	349.2	86.2	98.9	822.3 X 901.7 X 912.8
24ABB348	1	X	O	O	O	792.2	908.0	98.4	22.2	166.7	627.1	231.8	74.6	15.9	415.9	390.5	387.4	84.4	101.6	822.3 X 901.7 X 1000.1
24ABB360	1, 2	X	O	O	O	792.2	647.7	98.4	22.2	166.7	627.1	231.8	74.6	15.9	358.8	390.5	288.9	86.2	102.5	822.3 X 901.7 X 827.1
		208-230-1-60	230-1-60	208/230-3-60	460-3-60															

X = YES
O = NO

NOTES:

1. ALLOW 762.0 CLEARANCE TO SERVICE SIDE OF UNIT, 1219.2 ABOVE UNIT, 152.4 ON ONE SIDE, 304.8 ON REMAINING SIDE, AND 609.6 BETWEEN UNITS FOR PROPER AIRFLOW.
2. MINIMUM OUTDOOR OPERATING AMBIENT IN COOLING MODE IS 13°C, MAX. 52°C.
3. SERIES DESIGNATION IS THE 13TH POSITION OF THE UNIT MODEL NUMBER.
4. CENTER OF GRAVITY ⊕.
5. ALL DIMENSIONS ARE IN "MM" UNLESS NOTED.

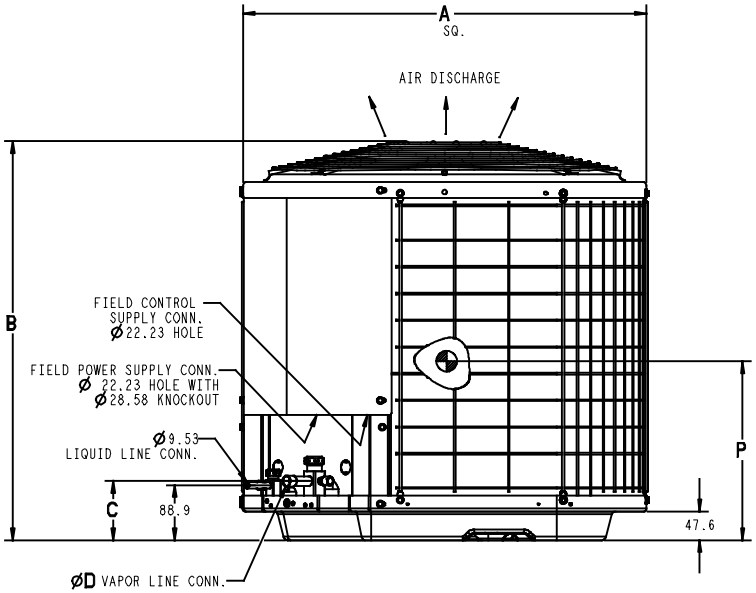

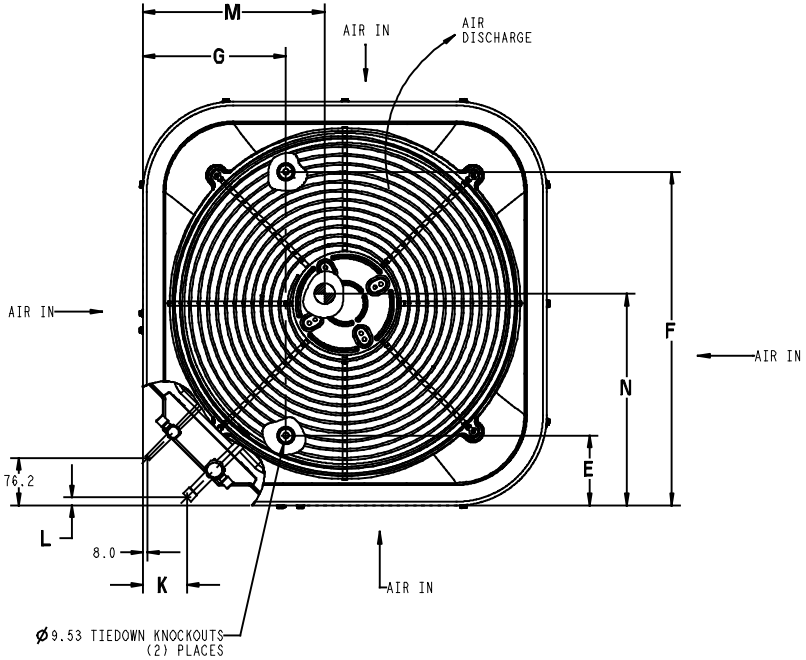

UNIT SIZE	MINIMUM MOUNTING PAD DIMENSIONS
18,24,30	596.9 X 596.9
36	660.4 X 660.4
42,48,60	800.1 X 800.1
-	889.0 X 889.0

24ABB3

CLEARANCES

Clearances (various examples)

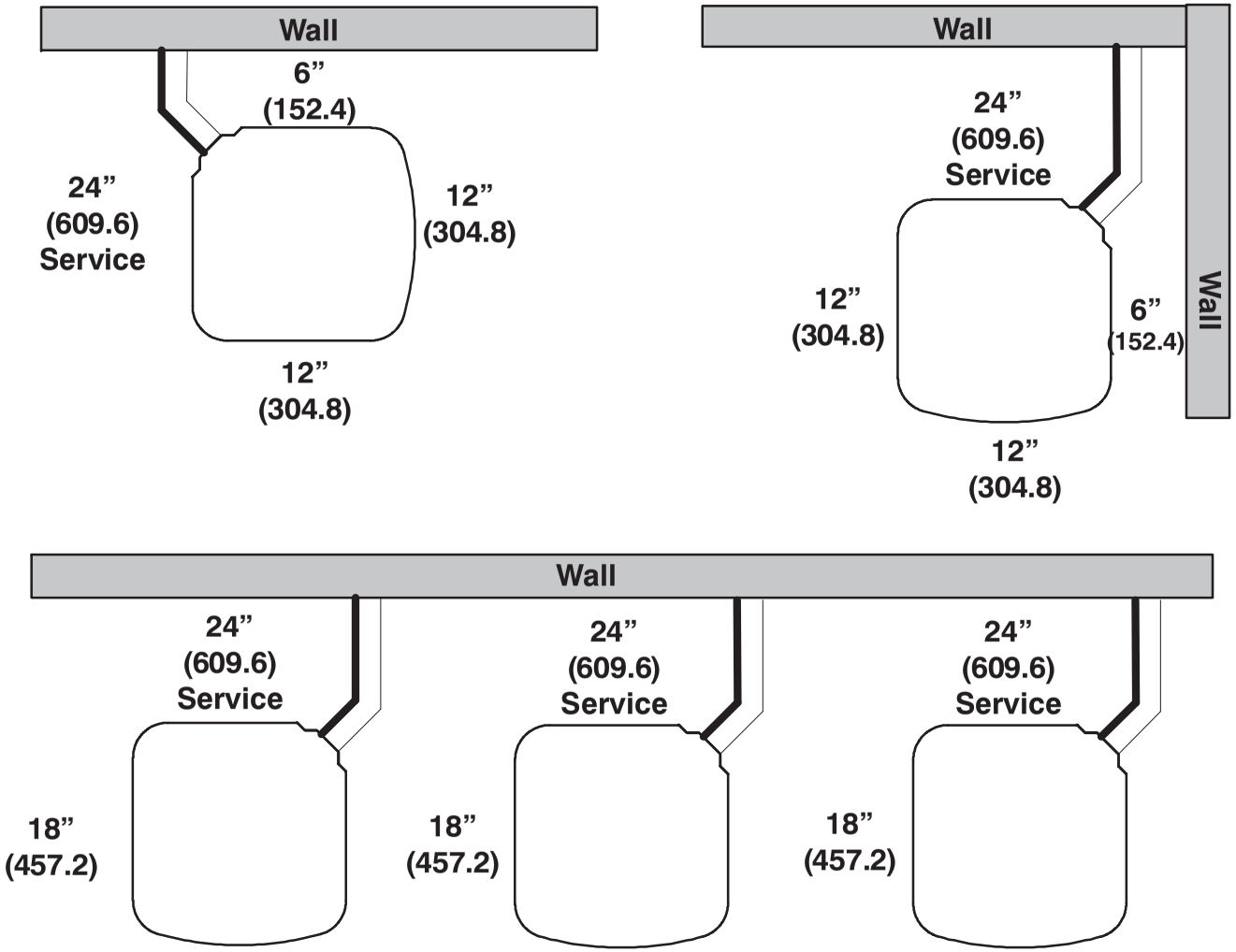

Note: Numbers in ( ) = mm

IMPORTANT: When installing multiple units in an alcove, roof well, or partially enclosed area, ensure there is adequate ventilation to prevent re-circulation of discharge air.

COMBINATION RATINGS

ARI Ref. No.	Model Number	Indoor Model	Furnace Model	Capacity	EER	SEER
3249887	24ABB318(A,W)31	†CAP**1814A**+TDR		17,600	10.9	13.0
3249888	24ABB318(A,W)31	CAP**1814A**	58CV(A,X)070−12	17,500	12.0	14.5
3249889	24ABB318(A,W)31	CAP**1814A**	58PH*045−08	17,800	12.0	14.5
3249891	24ABB318(A,W)31	CAP**2414A**	58CV(A,X)070−12	17,800	12.2	14.5
3249892	24ABB318(A,W)31	CAP**2414A**	58PH*045−08	18,000	12.2	14.5
3249890	24ABB318(A,W)31	CAP**2414A**+TDR		17,900	11.0	13.2
3249895	24ABB318(A,W)31	CAP**2417A**	58CV(A,X)090−16	17,800	12.2	14.5
3249896	24ABB318(A,W)31	CAP**2417A**	58MEB040−12	18,000	12.5	15.0
3249897	24ABB318(A,W)31	CAP**2417A**	58MEB060−12	18,000	12.5	15.0
3249894	24ABB318(A,W)31	CAP**2417A**	58MV(B,C)060−14	17,800	12.2	14.5
3249893	24ABB318(A,W)31	CAP**2417A**+TDR		17,900	11.0	13.2
3249918	24ABB318(A,W)31	CNPF*2418A**+TDR		17,900	11.0	13.2
3249913	24ABB318(A,W)31	CNPH*2417A**	58CV(A,X)070−12	17,800	12.2	14.5
3249914	24ABB318(A,W)31	CNPH*2417A**	58CV(A,X)090−16	17,800	12.2	14.5
3249916	24ABB318(A,W)31	CNPH*2417A**	58MEB040−12	18,000	12.2	15.0
3249917	24ABB318(A,W)31	CNPH*2417A**	58MEB060−12	18,000	12.2	15.0
3249911	24ABB318(A,W)31	CNPH*2417A**	58MV(B,C)060−14	17,800	12.2	14.5
3249912	24ABB318(A,W)31	CNPH*2417A**	58MV(B,C)080−14	17,700	12.2	14.5
3249910	24ABB318(A,W)31	CNPH*2417A**	58MVB040−14	17,800	12.2	14.5
3249915	24ABB318(A,W)31	CNPH*2417A**	58PH*045−08	17,800	12.2	14.5
3249909	24ABB318(A,W)31	CNPH*2417A**+TDR		17,900	11.0	13.2
3249899	24ABB318(A,W)31	CNPV*1814A**	58CV(A,X)070−12	17,500	12.0	14.5
3249900	24ABB318(A,W)31	CNPV*1814A**	58PH*045−08	17,800	12.0	14.5
3249898	24ABB318(A,W)31	CNPV*1814A**+TDR		17,600	10.9	13.0
3249902	24ABB318(A,W)31	CNPV*2414A**	58CV(A,X)070−12	17,800	12.2	14.5
3249903	24ABB318(A,W)31	CNPV*2414A**	58PH*045−08	18,000	12.2	14.5
3249901	24ABB318(A,W)31	CNPV*2414A**+TDR		17,900	11.0	13.2
3249906	24ABB318(A,W)31	CNPV*2417A**	58CV(A,X)090−16	17,800	12.2	14.5
3249907	24ABB318(A,W)31	CNPV*2417A**	58MEB040−12	18,000	12.2	15.0
3249908	24ABB318(A,W)31	CNPV*2417A**	58MEB060−12	18,000	12.2	15.0
3249905	24ABB318(A,W)31	CNPV*2417A**	58MV(B,C)060−14	17,800	12.2	14.5
3249904	24ABB318(A,W)31	CNPV*2417A**+TDR		17,900	11.0	13.2
3249923	24ABB318(A,W)31	CSPH*2412A**	58CV(A,X)070−12	17,900	12.2	14.5
3249924	24ABB318(A,W)31	CSPH*2412A**	58CV(A,X)090−16	17,900	12.2	14.5
3249926	24ABB318(A,W)31	CSPH*2412A**	58MEB040−12	18,000	12.2	15.0
3249927	24ABB318(A,W)31	CSPH*2412A**	58MEB060−12	18,000	12.2	15.0
3249921	24ABB318(A,W)31	CSPH*2412A**	58MV(B,C)060−14	17,900	12.2	14.5
3249922	24ABB318(A,W)31	CSPH*2412A**	58MV(B,C)080−14	17,900	12.2	14.5
3249920	24ABB318(A,W)31	CSPH*2412A**	58MVB040−14	17,800	12.2	14.5
3249925	24ABB318(A,W)31	CSPH*2412A**	58PH*045−08	18,000	12.2	14.5
3249919	24ABB318(A,W)31	CSPH*2412A**+TDR		17,900	11.0	13.2
3249932	24ABB318(A,W)31	FE4ANF002+UI		17,300	12.2	14.5
3249933	24ABB318(A,W)31	FF1ENP018		17,500	10.9	13.0
3249934	24ABB318(A,W)31	FF1ENP024		17,500	11.0	13.2
3249935	24ABB318(A,W)31	FV4BNF002		17,300	12.2	14.5
3249930	24ABB318(A,W)31	FX4CNF018		18,000	12.0	14.5
3249931	24ABB318(A,W)31	FX4CNF024		18,000	12.2	14.5
3249928	24ABB318(A,W)31	FY4ANF018		17,700	10.9	13.0
3249929	24ABB318(A,W)31	FY4ANF024		18,000	10.9	13.0
3250356	24ABB324(A,W)31	†CAP**2414A**+TDR		23,000	11.0	13.0
3250357	24ABB324(A,W)31	CAP**2414A**	58CV(A,X)070−12	22,800	12.0	14.0
3250358	24ABB324(A,W)31	CAP**2414A**	58PH*045−08	23,000	11.7	14.0
3250361	24ABB324(A,W)31	CAP**2417A**	58CV(A,X)090−16	23,000	12.2	14.5
3250362	24ABB324(A,W)31	CAP**2417A**	58MEB040−12	23,400	12.2	14.5
3250363	24ABB324(A,W)31	CAP**2417A**	58MEB060−12	23,400	12.2	14.5
3250364	24ABB324(A,W)31	CAP**2417A**	58MEB080−12	23,200	12.2	14.5
3250360	24ABB324(A,W)31	CAP**2417A**	58MV(B,C)060−14	23,200	12.2	14.5
3250359	24ABB324(A,W)31	CAP**2417A**+TDR		23,000	11.0	13.0
3250366	24ABB324(A,W)31	CAP**3014A**	58CV(A,X)070−12	23,000	12.0	14.5
3250367	24ABB324(A,W)31	CAP**3014A**	58PH*045−08	23,400	12.0	14.0
3250365	24ABB324(A,W)31	CAP**3014A**+TDR		23,200	11.0	13.0
3250370	24ABB324(A,W)31	CAP**3017A**	58CV(A,X)090−16	23,200	12.2	14.5
3250371	24ABB324(A,W)31	CAP**3017A**	58MEB040−12	23,600	12.2	14.5
3250372	24ABB324(A,W)31	CAP**3017A**	58MEB060−12	23,800	12.2	14.5
3250373	24ABB324(A,W)31	CAP**3017A**	58MEB080−12	23,600	12.2	14.5
3250369	24ABB324(A,W)31	CAP**3017A**	58MV(B,C)060−14	23,400	12.2	14.5
3250368	24ABB324(A,W)31	CAP**3017A**+TDR		23,200	11.0	13.0
3250467	24ABB324(A,W)31	CAP**3617A**	58PH*045−08	23,400	12.2	14.5
3250424	24ABB324(A,W)31	CNPF*2418A**+TDR		23,000	11.0	13.0
3250399	24ABB324(A,W)31	CNPH*2417A**	58CV(A,X)070−12	22,800	11.7	14.0
3250400	24ABB324(A,W)31	CNPH*2417A**	58CV(A,X)090−16	22,800	12.0	14.0
3250401	24ABB324(A,W)31	CNPH*2417A**	58CV(A,X)110−20	22,800	11.7	14.0
3250402	24ABB324(A,W)31	CNPH*2417A**	58CV(A,X)135−22	22,800	12.0	14.0
3250403	24ABB324(A,W)31	CNPH*2417A**	58CV(A,X)155−22	22,800	12.0	14.0
3250405	24ABB324(A,W)31	CNPH*2417A**	58MEB040−12	23,200	12.0	14.5
3250406	24ABB324(A,W)31	CNPH*2417A**	58MEB060−12	23,200	12.0	14.5
3250407	24ABB324(A,W)31	CNPH*2417A**	58MEB080−12	23,200	12.0	14.5
3250394	24ABB324(A,W)31	CNPH*2417A**	58MV(B,C)060−14	23,200	12.0	14.0

See notes on page 22

COMBINATION RATINGS CONTINUED

ARI Ref. No.	Model Number	Indoor Model	Furnace Model	Capacity	EER	SEER
3250395	24ABB324(A,W)31	CNPH*2417A**	58MV(B,C)080−14	22,800	12.0	14.0
3250396	24ABB324(A,W)31	CNPH*2417A**	58MV(B,C)080−20	22,600	12.0	14.0
3250397	24ABB324(A,W)31	CNPH*2417A**	58MV(B,C)100−20	22,800	12.0	14.0
3250398	24ABB324(A,W)31	CNPH*2417A**	58MV(B,C)120−20	23,000	12.0	14.0
3250393	24ABB324(A,W)31	CNPH*2417A**	58MVB040−14	22,800	11.7	14.0
3250404	24ABB324(A,W)31	CNPH*2417A**	58PH*045−08	23,000	11.7	14.0
3250392	24ABB324(A,W)31	CNPH*2417A**+TDR		23,000	11.0	13.0
3250415	24ABB324(A,W)31	CNPH*3017A**	58CV(A,X)070−12	23,000	12.0	14.5
3250416	24ABB324(A,W)31	CNPH*3017A**	58CV(A,X)090−16	23,200	12.2	14.5
3250417	24ABB324(A,W)31	CNPH*3017A**	58CV(A,X)110−20	23,200	12.2	14.5
3250418	24ABB324(A,W)31	CNPH*3017A**	58CV(A,X)135−22	23,200	12.2	14.5
3250419	24ABB324(A,W)31	CNPH*3017A**	58CV(A,X)155−22	23,200	12.2	14.5
3250421	24ABB324(A,W)31	CNPH*3017A**	58MEB040−12	23,600	12.2	14.5
3250422	24ABB324(A,W)31	CNPH*3017A**	58MEB060−12	23,800	12.2	14.5
3250423	24ABB324(A,W)31	CNPH*3017A**	58MEB080−12	23,600	12.2	14.5
3250410	24ABB324(A,W)31	CNPH*3017A**	58MV(B,C)060−14	23,400	12.2	14.5
3250411	24ABB324(A,W)31	CNPH*3017A**	58MV(B,C)080−14	23,200	12.2	14.5
3250412	24ABB324(A,W)31	CNPH*3017A**	58MV(B,C)080−20	23,000	12.2	14.5
3250413	24ABB324(A,W)31	CNPH*3017A**	58MV(B,C)100−20	23,200	12.2	14.5
3250414	24ABB324(A,W)31	CNPH*3017A**	58MV(B,C)120−20	23,200	12.2	14.5
3250409	24ABB324(A,W)31	CNPH*3017A**	58MVB040−14	23,200	12.2	14.5
3250420	24ABB324(A,W)31	CNPH*3017A**	58PH*045−08	23,400	12.0	14.0
3250408	24ABB324(A,W)31	CNPH*3017A**+TDR		23,200	11.0	13.0
3250375	24ABB324(A,W)31	CNPV*2414A**	58CV(A,X)070−12	22,800	11.7	14.0
3250376	24ABB324(A,W)31	CNPV*2414A**	58PH*045−08	23,000	11.7	14.0
3250374	24ABB324(A,W)31	CNPV*2414A**+TDR		23,000	11.0	13.0
3250379	24ABB324(A,W)31	CNPV*2417A**	58CV(A,X)090−16	22,800	12.0	14.0
3250380	24ABB324(A,W)31	CNPV*2417A**	58MEB040−12	23,200	12.0	14.5
3250381	24ABB324(A,W)31	CNPV*2417A**	58MEB060−12	23,200	12.0	14.5
3250382	24ABB324(A,W)31	CNPV*2417A**	58MEB080−12	23,200	12.0	14.5
3250378	24ABB324(A,W)31	CNPV*2417A**	58MV(B,C)060−14	23,200	12.0	14.0
3250377	24ABB324(A,W)31	CNPV*2417A**+TDR		23,000	11.0	13.0
3250384	24ABB324(A,W)31	CNPV*3014A**	58CV(A,X)070−12	23,000	12.0	14.5
3250385	24ABB324(A,W)31	CNPV*3014A**	58PH*045−08	23,200	12.0	14.0
3250383	24ABB324(A,W)31	CNPV*3014A**+TDR		23,200	11.0	13.0
3250388	24ABB324(A,W)31	CNPV*3017A**	58CV(A,X)090−16	23,200	12.2	14.5
3250389	24ABB324(A,W)31	CNPV*3017A**	58MEB040−12	23,600	12.2	14.5
3250390	24ABB324(A,W)31	CNPV*3017A**	58MEB060−12	23,800	12.2	14.5
3250391	24ABB324(A,W)31	CNPV*3017A**	58MEB080−12	23,600	12.2	14.5
3250387	24ABB324(A,W)31	CNPV*3017A**	58MV(B,C)060−14	23,400	12.2	14.5
3250386	24ABB324(A,W)31	CNPV*3017A**+TDR		23,200	11.0	13.0
3250468	24ABB324(A,W)31	CNPV*3617A**	58PH*045−08	23,400	12.2	14.5
3250432	24ABB324(A,W)31	CSPH*2412A**	58CV(A,X)070−12	23,000	12.0	14.0
3250433	24ABB324(A,W)31	CSPH*2412A**	58CV(A,X)090−16	23,200	12.0	14.0
3250434	24ABB324(A,W)31	CSPH*2412A**	58CV(A,X)110−20	23,200	12.0	14.0
3250435	24ABB324(A,W)31	CSPH*2412A**	58CV(A,X)135−22	23,200	12.0	14.0
3250436	24ABB324(A,W)31	CSPH*2412A**	58CV(A,X)155−22	23,200	12.0	14.0
3250438	24ABB324(A,W)31	CSPH*2412A**	58MEB040−12	23,400	12.2	14.5
3250439	24ABB324(A,W)31	CSPH*2412A**	58MEB060−12	23,400	12.2	14.5
3250440	24ABB324(A,W)31	CSPH*2412A**	58MEB080−12	23,400	12.2	14.5
3250427	24ABB324(A,W)31	CSPH*2412A**	58MV(B,C)060−14	23,400	12.0	14.0
3250428	24ABB324(A,W)31	CSPH*2412A**	58MV(B,C)080−14	23,000	12.0	14.0
3250429	24ABB324(A,W)31	CSPH*2412A**	58MV(B,C)080−20	23,000	12.0	14.0
3250430	24ABB324(A,W)31	CSPH*2412A**	58MV(B,C)100−20	23,200	12.0	14.0
3250431	24ABB324(A,W)31	CSPH*2412A**	58MV(B,C)120−20	23,200	12.0	14.0
3250426	24ABB324(A,W)31	CSPH*2412A**	58MVB040−14	23,200	12.0	14.0
3250437	24ABB324(A,W)31	CSPH*2412A**	58PH*045−08	23,200	12.0	14.0
3250425	24ABB324(A,W)31	CSPH*2412A**+TDR		23,000	11.0	13.0
3250448	24ABB324(A,W)31	CSPH*3012A**	58CV(A,X)070−12	23,000	12.0	14.5
3250449	24ABB324(A,W)31	CSPH*3012A**	58CV(A,X)090−16	23,200	12.2	14.5
3250450	24ABB324(A,W)31	CSPH*3012A**	58CV(A,X)110−20	23,200	12.2	14.5
3250451	24ABB324(A,W)31	CSPH*3012A**	58CV(A,X)135−22	23,200	12.2	14.5
3250452	24ABB324(A,W)31	CSPH*3012A**	58CV(A,X)155−22	23,200	12.2	14.5
3250454	24ABB324(A,W)31	CSPH*3012A**	58MEB040−12	23,600	12.2	14.5
3250455	24ABB324(A,W)31	CSPH*3012A**	58MEB060−12	23,800	12.2	14.5
3250456	24ABB324(A,W)31	CSPH*3012A**	58MEB080−12	23,600	12.2	14.5
3250443	24ABB324(A,W)31	CSPH*3012A**	58MV(B,C)060−14	23,600	12.2	14.5
3250444	24ABB324(A,W)31	CSPH*3012A**	58MV(B,C)080−14	23,200	12.2	14.5
3250445	24ABB324(A,W)31	CSPH*3012A**	58MV(B,C)080−20	23,000	12.2	14.5
3250446	24ABB324(A,W)31	CSPH*3012A**	58MV(B,C)100−20	23,200	12.2	14.5
3250447	24ABB324(A,W)31	CSPH*3012A**	58MV(B,C)120−20	23,400	12.2	14.5
3250442	24ABB324(A,W)31	CSPH*3012A**	58MVB040−14	23,200	12.2	14.5
3250453	24ABB324(A,W)31	CSPH*3012A**	58PH*045−08	23,400	12.0	14.0
3250441	24ABB324(A,W)31	CSPH*3012A**+TDR		23,200	11.0	13.0
3250462	24ABB324(A,W)31	FE4AN(B,F)003+UI		23,400	12.2	14.5
3250461	24ABB324(A,W)31	FE4ANF002+UI		22,600	12.0	14.0
3250463	24ABB324(A,W)31	FF1ENP024		22,600	11.0	13.0
3250464	24ABB324(A,W)31	FF1ENP030		23,000	10.9	13.0
3250466	24ABB324(A,W)31	FV4BN(B,F)003		23,400	12.2	14.5

See notes on page 22

COMBINATION RATINGS CONTINUED

ARI Ref. No.	Model Number	Indoor Model	Furnace Model	Capacity	EER	SEER
3250465	24ABB324(A,W)31	FV4BNF002		22,600	12.0	14.0
3250459	24ABB324(A,W)31	FX4CNF024		23,200	11.7	14.0
3250460	24ABB324(A,W)31	FX4CNF030		23,400	12.0	14.5
3250457	24ABB324(A,W)31	FY4ANF024		23,000	11.0	13.0
3250458	24ABB324(A,W)31	FY4ANF030		23,200	11.0	13.0
3250469	24ABB330(A,W)31	†CAP**3014A**+TDR		27,400	10.8	13.0
3250482	24ABB330(A,W)31	CAP**3014A**	58CV(A,X)070−12	27,200	11.7	14.0
3250485	24ABB330(A,W)31	CAP**3017A**	58CV(A,X)090−16	27,400	12.0	14.0
3250487	24ABB330(A,W)31	CAP**3017A**	58MEB040−12	27,600	12.0	14.5
3250488	24ABB330(A,W)31	CAP**3017A**	58MEB060−12	27,800	11.7	14.0
3250489	24ABB330(A,W)31	CAP**3017A**	58MEB080−12	27,600	12.0	14.0
3250490	24ABB330(A,W)31	CAP**3017A**	58MEB080−16	27,800	11.7	14.0
3250484	24ABB330(A,W)31	CAP**3017A**	58MV(B,C)060−14	27,400	11.7	14.0
3250486	24ABB330(A,W)31	CAP**3017A**	58PH*070−16	27,400	11.7	14.0
3250483	24ABB330(A,W)31	CAP**3017A**+TDR		27,400	10.8	13.0
3250492	24ABB330(A,W)31	CAP**3614A**	58CV(A,X)070−12	27,400	11.7	14.0
3250491	24ABB330(A,W)31	CAP**3614A**+TDR		27,400	10.8	13.0
3250495	24ABB330(A,W)31	CAP**3617A**	58CV(A,X)090−16	27,400	12.0	14.5
3250497	24ABB330(A,W)31	CAP**3617A**	58MEB040−12	27,800	12.0	14.5
3250498	24ABB330(A,W)31	CAP**3617A**	58MEB060−12	27,600	12.0	14.5
3250499	24ABB330(A,W)31	CAP**3617A**	58MEB080−12	27,600	12.0	14.5
3250500	24ABB330(A,W)31	CAP**3617A**	58MEB080−16	28,000	11.7	14.0
3250494	24ABB330(A,W)31	CAP**3617A**	58MV(B,C)060−14	27,600	12.0	14.0
3250496	24ABB330(A,W)31	CAP**3617A**	58PH*070−16	27,600	11.7	14.0
3250493	24ABB330(A,W)31	CAP**3617A**+TDR		27,600	10.8	13.0
3250505	24ABB330(A,W)31	CAP**3621A**	58CV(A,X)110−20	27,600	12.0	14.5
3250502	24ABB330(A,W)31	CAP**3621A**	58MV(B,C)080−14	27,400	11.7	14.0
3250503	24ABB330(A,W)31	CAP**3621A**	58MV(B,C)080−20	27,400	12.0	14.0
3250504	24ABB330(A,W)31	CAP**3621A**	58MV(B,C)100−20	27,200	11.7	14.0
3250506	24ABB330(A,W)31	CAP**3621A**	58PH*090−16	27,800	12.0	14.0
3250501	24ABB330(A,W)31	CAP**3621A**+TDR		27,600	10.8	13.0
3250567	24ABB330(A,W)31	CNPF*3618A**+TDR		27,400	10.8	13.0
3250538	24ABB330(A,W)31	CNPH*3017A**	58CV(A,X)070−12	27,200	11.7	14.0
3250539	24ABB330(A,W)31	CNPH*3017A**	58CV(A,X)090−16	27,400	11.7	14.0
3250540	24ABB330(A,W)31	CNPH*3017A**	58CV(A,X)110−20	27,400	11.7	14.0
3250541	24ABB330(A,W)31	CNPH*3017A**	58CV(A,X)135−22	27,400	12.0	14.0
3250542	24ABB330(A,W)31	CNPH*3017A**	58CV(A,X)155−22	27,400	12.0	14.0
3250545	24ABB330(A,W)31	CNPH*3017A**	58MEB040−12	27,600	12.0	14.0
3250546	24ABB330(A,W)31	CNPH*3017A**	58MEB060−12	27,800	11.7	14.0
3250547	24ABB330(A,W)31	CNPH*3017A**	58MEB080−12	27,600	12.0	14.0
3250548	24ABB330(A,W)31	CNPH*3017A**	58MEB080−16	27,800	11.7	14.0
3250533	24ABB330(A,W)31	CNPH*3017A**	58MV(B,C)060−14	27,600	11.7	14.0
3250534	24ABB330(A,W)31	CNPH*3017A**	58MV(B,C)080−14	27,200	11.7	14.0
3250535	24ABB330(A,W)31	CNPH*3017A**	58MV(B,C)080−20	27,400	11.7	14.0
3250536	24ABB330(A,W)31	CNPH*3017A**	58MV(B,C)100−20	27,200	11.7	14.0
3250537	24ABB330(A,W)31	CNPH*3017A**	58MV(B,C)120−20	27,400	12.0	14.0
3250532	24ABB330(A,W)31	CNPH*3017A**	58MVB040−14	27,400	11.7	14.0
3250543	24ABB330(A,W)31	CNPH*3017A**	58PH*070−16	27,400	11.5	14.0
3250544	24ABB330(A,W)31	CNPH*3017A**	58PH*090−16	27,600	11.7	14.0
3250531	24ABB330(A,W)31	CNPH*3017A**+TDR		27,400	10.8	13.0
3250556	24ABB330(A,W)31	CNPH*3617A**	58CV(A,X)070−12	27,400	11.7	14.0
3250557	24ABB330(A,W)31	CNPH*3617A**	58CV(A,X)090−16	27,400	11.7	14.0
3250558	24ABB330(A,W)31	CNPH*3617A**	58CV(A,X)110−20	27,400	11.7	14.0
3250559	24ABB330(A,W)31	CNPH*3617A**	58CV(A,X)135−22	27,400	12.0	14.0
3250560	24ABB330(A,W)31	CNPH*3617A**	58CV(A,X)155−22	27,400	12.0	14.0
3250563	24ABB330(A,W)31	CNPH*3617A**	58MEB040−12	27,200	12.0	14.5
3250564	24ABB330(A,W)31	CNPH*3617A**	58MEB060−12	27,200	12.0	14.5
3250565	24ABB330(A,W)31	CNPH*3617A**	58MEB080−12	27,000	12.0	14.5
3250566	24ABB330(A,W)31	CNPH*3617A**	58MEB080−16	27,800	11.7	14.0
3250551	24ABB330(A,W)31	CNPH*3617A**	58MV(B,C)060−14	27,600	11.7	14.0
3250552	24ABB330(A,W)31	CNPH*3617A**	58MV(B,C)080−14	27,200	11.7	14.0
3250553	24ABB330(A,W)31	CNPH*3617A**	58MV(B,C)080−20	27,400	11.7	14.0
3250554	24ABB330(A,W)31	CNPH*3617A**	58MV(B,C)100−20	27,200	11.7	14.0
3250555	24ABB330(A,W)31	CNPH*3617A**	58MV(B,C)120−20	27,400	12.0	14.0
3250550	24ABB330(A,W)31	CNPH*3617A**	58MVB040−14	27,400	11.7	14.0
3250561	24ABB330(A,W)31	CNPH*3617A**	58PH*070−16	27,400	11.5	14.0
3250562	24ABB330(A,W)31	CNPH*3617A**	58PH*090−16	27,600	11.7	14.0
3250549	24ABB330(A,W)31	CNPH*3617A**+TDR		27,400	10.8	13.0
3250508	24ABB330(A,W)31	CNPV*3014A**	58CV(A,X)070−12	27,200	11.7	14.0
3250507	24ABB330(A,W)31	CNPV*3014A**+TDR		27,400	10.8	13.0
3250511	24ABB330(A,W)31	CNPV*3017A**	58CV(A,X)090−16	27,400	11.7	14.0
3250513	24ABB330(A,W)31	CNPV*3017A**	58MEB040−12	27,600	12.0	14.0
3250514	24ABB330(A,W)31	CNPV*3017A**	58MEB060−12	27,800	11.7	14.0
3250515	24ABB330(A,W)31	CNPV*3017A**	58MEB080−12	27,600	12.0	14.0
3250516	24ABB330(A,W)31	CNPV*3017A**	58MEB080−16	27,800	11.7	14.0
3250510	24ABB330(A,W)31	CNPV*3017A**	58MV(B,C)060−14	27,600	11.7	14.0
3250512	24ABB330(A,W)31	CNPV*3017A**	58PH*070−16	27,400	11.5	14.0
3250509	24ABB330(A,W)31	CNPV*3017A**+TDR		27,400	10.8	13.0

See notes on page 22

COMBINATION RATINGS CONTINUED

ARI Ref. No.	Model Number	Indoor Model	Furnace Model	Capacity	EER	SEER
3250519	24ABB330(A,W)31	CNPV*3617A**	58CV(A,X)090−16	27,400	11.7	14.0
3250521	24ABB330(A,W)31	CNPV*3617A**	58MEB040−12	27,200	12.0	14.5
3250522	24ABB330(A,W)31	CNPV*3617A**	58MEB060−12	27,200	12.0	14.5
3250523	24ABB330(A,W)31	CNPV*3617A**	58MEB080−12	27,000	12.0	14.5
3250524	24ABB330(A,W)31	CNPV*3617A**	58MEB080−16	27,800	11.7	14.0
3250518	24ABB330(A,W)31	CNPV*3617A**	58MV(B,C)060−14	27,600	11.7	14.0
3250520	24ABB330(A,W)31	CNPV*3617A**	58PH*070−16	27,400	11.5	14.0
3250517	24ABB330(A,W)31	CNPV*3617A**+TDR		27,400	10.8	13.0
3250529	24ABB330(A,W)31	CNPV*3621A**	58CV(A,X)110−20	27,400	11.7	14.0
3250526	24ABB330(A,W)31	CNPV*3621A**	58MV(B,C)080−14	27,200	11.7	14.0
3250527	24ABB330(A,W)31	CNPV*3621A**	58MV(B,C)080−20	27,400	11.7	14.0
3250528	24ABB330(A,W)31	CNPV*3621A**	58MV(B,C)100−20	27,200	11.7	14.0
3250530	24ABB330(A,W)31	CNPV*3621A**	58PH*090−16	27,600	11.7	14.0
3250525	24ABB330(A,W)31	CNPV*3621A**+TDR		27,400	10.8	13.0
3250481	24ABB330(A,W)31	CNPV*4217A**	58CV(A,X)090−16	27,800	12.2	14.5
3250480	24ABB330(A,W)31	CNPV*4821A**	58PH*090−16	28,400	12.2	14.5
3250575	24ABB330(A,W)31	CSPH*3012A**	58CV(A,X)070−12	27,200	11.7	13.5
3250576	24ABB330(A,W)31	CSPH*3012A**	58CV(A,X)090−16	27,400	11.7	14.0
3250577	24ABB330(A,W)31	CSPH*3012A**	58CV(A,X)110−20	27,600	11.7	14.0
3250578	24ABB330(A,W)31	CSPH*3012A**	58CV(A,X)135−22	27,600	11.7	14.0
3250579	24ABB330(A,W)31	CSPH*3012A**	58CV(A,X)155−22	27,600	12.0	14.0
3250582	24ABB330(A,W)31	CSPH*3012A**	58MEB040−12	27,800	12.0	14.0
3250583	24ABB330(A,W)31	CSPH*3012A**	58MEB060−12	27,800	11.7	14.0
3250584	24ABB330(A,W)31	CSPH*3012A**	58MEB080−12	27,600	11.7	14.0
3250585	24ABB330(A,W)31	CSPH*3012A**	58MEB080−16	27,800	11.7	14.0
3250570	24ABB330(A,W)31	CSPH*3012A**	58MV(B,C)060−14	27,600	11.7	14.0
3250571	24ABB330(A,W)31	CSPH*3012A**	58MV(B,C)080−14	27,400	11.7	14.0
3250572	24ABB330(A,W)31	CSPH*3012A**	58MV(B,C)080−20	27,400	11.7	14.0
3250573	24ABB330(A,W)31	CSPH*3012A**	58MV(B,C)100−20	27,200	11.7	14.0
3250574	24ABB330(A,W)31	CSPH*3012A**	58MV(B,C)120−20	27,600	11.7	14.0
3250569	24ABB330(A,W)31	CSPH*3012A**	58MVB040−14	27,400	11.7	13.5
3250580	24ABB330(A,W)31	CSPH*3012A**	58PH*070−16	27,600	11.5	13.5
3250581	24ABB330(A,W)31	CSPH*3012A**	58PH*090−16	27,600	11.7	14.0
3250568	24ABB330(A,W)31	CSPH*3012A**+TDR		27,400	10.8	13.0
3250593	24ABB330(A,W)31	CSPH*3612A**	58CV(A,X)070−12	27,800	12.0	14.0
3250594	24ABB330(A,W)31	CSPH*3612A**	58CV(A,X)090−16	27,800	12.0	14.5
3250595	24ABB330(A,W)31	CSPH*3612A**	58CV(A,X)110−20	27,800	12.0	14.0
3250596	24ABB330(A,W)31	CSPH*3612A**	58CV(A,X)135−22	27,800	12.0	14.0
3250597	24ABB330(A,W)31	CSPH*3612A**	58CV(A,X)155−22	27,800	12.0	14.0
3250600	24ABB330(A,W)31	CSPH*3612A**	58MEB040−12	27,400	12.0	14.5
3250601	24ABB330(A,W)31	CSPH*3612A**	58MEB060−12	27,400	12.0	14.5
3250602	24ABB330(A,W)31	CSPH*3612A**	58MEB080−12	27,400	12.0	14.5
3250603	24ABB330(A,W)31	CSPH*3612A**	58MEB080−16	27,800	12.0	14.0
3250588	24ABB330(A,W)31	CSPH*3612A**	58MV(B,C)060−14	28,000	12.0	14.0
3250589	24ABB330(A,W)31	CSPH*3612A**	58MV(B,C)080−14	27,800	12.0	14.0
3250590	24ABB330(A,W)31	CSPH*3612A**	58MV(B,C)080−20	27,800	12.0	14.0
3250591	24ABB330(A,W)31	CSPH*3612A**	58MV(B,C)100−20	27,600	12.0	14.0
3250592	24ABB330(A,W)31	CSPH*3612A**	58MV(B,C)120−20	28,000	12.0	14.0
3250587	24ABB330(A,W)31	CSPH*3612A**	58MVB040−14	27,800	12.0	14.0
3250598	24ABB330(A,W)31	CSPH*3612A**	58PH*070−16	27,800	11.7	13.5
3250599	24ABB330(A,W)31	CSPH*3612A**	58PH*090−16	27,800	12.0	14.0
3250586	24ABB330(A,W)31	CSPH*3612A**+TDR		27,400	10.8	13.0
3250474	24ABB330(A,W)31	FE4AN(B,F)003+UI		27,600	12.2	14.5
3250475	24ABB330(A,W)31	FE4AN(B,F)005+UI		28,400	12.2	14.5
3250473	24ABB330(A,W)31	FE4ANF002+UI		27,600	11.7	14.0
3250476	24ABB330(A,W)31	FF1ENP036		27,400	10.9	13.0
3250478	24ABB330(A,W)31	FV4BN(B,F)003		27,600	12.2	14.5
3250479	24ABB330(A,W)31	FV4BN(B,F)005		28,400	12.2	14.5
3250477	24ABB330(A,W)31	FV4BNF002		26,800	11.7	13.5
3250472	24ABB330(A,W)31	FX4CN(B,F)036		27,800	11.5	13.5
3250471	24ABB330(A,W)31	FX4CNF030		27,600	11.7	14.0
3250470	24ABB330(A,W)31	FY4ANF030		27,000	10.9	13.0
3250190	24ABB336(A,W)31	†CAP**3617A**+TDR		33,800	10.9	13.0
3250235	24ABB336(A,W)31	CAP**3614A**	58CV(A,X)070−12	32,400	11.5	13.5
3250234	24ABB336(A,W)31	CAP**3614A**+TDR		32,800	10.9	13.0
3250237	24ABB336(A,W)31	CAP**3617A**	58CV(A,X)090−16	33,400	11.7	14.0
3250352	24ABB336(A,W)31	CAP**3617A**	58MEB040−12	33,600	11.7	14.0
3250353	24ABB336(A,W)31	CAP**3617A**	58MEB060−12	33,600	11.7	14.0
3250354	24ABB336(A,W)31	CAP**3617A**	58MEB080−12	33,600	11.7	14.0
3250355	24ABB336(A,W)31	CAP**3617A**	58MEB080−16	33,600	11.7	14.0
3250236	24ABB336(A,W)31	CAP**3617A**	58MV(B,C)060−14	33,600	11.5	13.5
3250330	24ABB336(A,W)31	CAP**3617A**	58PH*070−16	33,400	11.2	13.5
3250242	24ABB336(A,W)31	CAP**3621A**	58CV(A,X)110−20	33,400	11.7	14.0
3250191	24ABB336(A,W)31	CAP**3621A**	58MEB100−20	33,600	12.0	14.0
3250239	24ABB336(A,W)31	CAP**3621A**	58MV(B,C)080−14	33,400	11.5	13.5
3250240	24ABB336(A,W)31	CAP**3621A**	58MV(B,C)080−20	33,400	11.7	14.0
3250241	24ABB336(A,W)31	CAP**3621A**	58MV(B,C)100−20	33,600	11.7	14.0
3250331	24ABB336(A,W)31	CAP**3621A**	58PH*090−16	33,800	12.0	14.0

See notes on page 22

COMBINATION RATINGS CONTINUED

ARI Ref. No.	Model Number	Indoor Model	Furnace Model	Capacity	EER	SEER
3250332	24ABB336(A,W)31	CAP**3621A**	58PH*110−20	34,000	12.0	14.0
3250238	24ABB336(A,W)31	CAP**3621A**+TDR		33,800	10.9	13.0
3250247	24ABB336(A,W)31	CAP**4221A**	58CV(A,X)110−20	33,600	12.0	14.0
3250192	24ABB336(A,W)31	CAP**4221A**	58MEB100−20	33,800	12.0	14.0
3250244	24ABB336(A,W)31	CAP**4221A**	58MV(B,C)080−14	33,600	11.5	13.5
3250245	24ABB336(A,W)31	CAP**4221A**	58MV(B,C)080−20	33,600	11.7	14.0
3250246	24ABB336(A,W)31	CAP**4221A**	58MV(B,C)100−20	33,800	11.7	14.0
3250333	24ABB336(A,W)31	CAP**4221A**	58PH*090−16	34,000	12.0	14.0
3250334	24ABB336(A,W)31	CAP**4221A**	58PH*110−20	34,200	12.0	14.0
3250243	24ABB336(A,W)31	CAP**4221A**+TDR		34,000	10.9	13.0
3250251	24ABB336(A,W)31	CAP**4224A**	58CV(A,X)135−22	33,600	12.0	14.0
3250252	24ABB336(A,W)31	CAP**4224A**	58CV(A,X)155−22	33,800	12.0	14.0
3250250	24ABB336(A,W)31	CAP**4224A**	58MV(B,C)120−20	33,600	12.0	14.0
3250249	24ABB336(A,W)31	CAP**4224A**	58MVB040−14	33,400	11.7	13.5
3250248	24ABB336(A,W)31	CAP**4224A**+TDR		33,800	10.9	13.0
3250329	24ABB336(A,W)31	CAP**4817A**	58PH*070−16	34,400	11.7	14.0
3250290	24ABB336(A,W)31	CNPF*3618A**+TDR		33,800	10.9	13.0
3250273	24ABB336(A,W)31	CNPH*3617A**	58CV(A,X)070−12	33,200	11.5	13.5
3250274	24ABB336(A,W)31	CNPH*3617A**	58CV(A,X)090−16	33,200	11.5	13.5
3250275	24ABB336(A,W)31	CNPH*3617A**	58CV(A,X)110−20	33,400	11.5	13.5
3250276	24ABB336(A,W)31	CNPH*3617A**	58CV(A,X)135−22	33,400	11.7	14.0
3250277	24ABB336(A,W)31	CNPH*3617A**	58CV(A,X)155−22	33,400	11.7	14.0
3250207	24ABB336(A,W)31	CNPH*3617A**	58MEB040−12	33,400	11.7	14.0
3250208	24ABB336(A,W)31	CNPH*3617A**	58MEB060−12	33,400	11.7	14.0
3250209	24ABB336(A,W)31	CNPH*3617A**	58MEB080−12	33,400	11.7	14.0
3250210	24ABB336(A,W)31	CNPH*3617A**	58MEB080−16	33,400	11.7	14.0
3250211	24ABB336(A,W)31	CNPH*3617A**	58MEB100−20	33,200	11.7	14.0
3250268	24ABB336(A,W)31	CNPH*3617A**	58MV(B,C)060−14	33,400	11.5	13.5
3250269	24ABB336(A,W)31	CNPH*3617A**	58MV(B,C)080−14	33,200	11.5	13.5
3250270	24ABB336(A,W)31	CNPH*3617A**	58MV(B,C)080−20	33,200	11.5	13.5
3250271	24ABB336(A,W)31	CNPH*3617A**	58MV(B,C)100−20	33,400	11.5	13.5
3250272	24ABB336(A,W)31	CNPH*3617A**	58MV(B,C)120−20	33,400	11.5	13.5
3250267	24ABB336(A,W)31	CNPH*3617A**	58MVB040−14	33,200	11.5	13.5
3250340	24ABB336(A,W)31	CNPH*3617A**	58PH*070−16	33,200	11.0	13.5
3250341	24ABB336(A,W)31	CNPH*3617A**	58PH*090−16	33,400	11.7	14.0
3250342	24ABB336(A,W)31	CNPH*3617A**	58PH*110−20	33,600	11.7	14.0
3250266	24ABB336(A,W)31	CNPH*3617A**+TDR		33,800	10.9	13.0
3250285	24ABB336(A,W)31	CNPH*4221A**	58CV(A,X)070−12	33,600	11.5	13.5
3250286	24ABB336(A,W)31	CNPH*4221A**	58CV(A,X)090−16	33,600	11.7	14.0
3250287	24ABB336(A,W)31	CNPH*4221A**	58CV(A,X)110−20	33,800	11.7	14.0
3250288	24ABB336(A,W)31	CNPH*4221A**	58CV(A,X)135−22	33,600	12.0	14.0
3250289	24ABB336(A,W)31	CNPH*4221A**	58CV(A,X)155−22	33,800	12.0	14.0
3250212	24ABB336(A,W)31	CNPH*4221A**	58MEB040−12	33,800	11.7	14.0
3250213	24ABB336(A,W)31	CNPH*4221A**	58MEB060−12	33,800	11.7	14.0
3250214	24ABB336(A,W)31	CNPH*4221A**	58MEB080−12	33,800	11.7	14.0
3250215	24ABB336(A,W)31	CNPH*4221A**	58MEB080−16	33,800	11.7	14.0
3250216	24ABB336(A,W)31	CNPH*4221A**	58MEB100−20	33,800	11.7	14.0
3250280	24ABB336(A,W)31	CNPH*4221A**	58MV(B,C)060−14	33,800	11.7	14.0
3250281	24ABB336(A,W)31	CNPH*4221A**	58MV(B,C)080−14	33,600	11.5	13.5
3250282	24ABB336(A,W)31	CNPH*4221A**	58MV(B,C)080−20	33,600	11.7	14.0
3250283	24ABB336(A,W)31	CNPH*4221A**	58MV(B,C)100−20	33,800	11.7	14.0
3250284	24ABB336(A,W)31	CNPH*4221A**	58MV(B,C)120−20	33,600	11.7	14.0
3250279	24ABB336(A,W)31	CNPH*4221A**	58MVB040−14	33,400	11.5	13.5
3250343	24ABB336(A,W)31	CNPH*4221A**	58PH*070−16	33,600	11.2	13.5
3250344	24ABB336(A,W)31	CNPH*4221A**	58PH*090−16	34,000	12.0	14.0
3250345	24ABB336(A,W)31	CNPH*4221A**	58PH*110−20	34,000	12.0	14.0
3250278	24ABB336(A,W)31	CNPH*4221A**+TDR		34,000	10.9	13.0
3250227	24ABB336(A,W)31	CNPH*4821A**	58CV(A,X)090−16	34,200	12.2	14.5
3250228	24ABB336(A,W)31	CNPH*4821A**	58MEB060−12	34,600	12.0	14.5
3250229	24ABB336(A,W)31	CNPH*4821A**	58MEB080−12	34,600	12.2	14.5
3250231	24ABB336(A,W)31	CNPH*4821A**	58MEB100−20	34,400	12.2	14.5
3250255	24ABB336(A,W)31	CNPV*3617A**	58CV(A,X)090−16	33,200	11.5	13.5
3250193	24ABB336(A,W)31	CNPV*3617A**	58MEB040−12	33,400	11.7	14.0
3250194	24ABB336(A,W)31	CNPV*3617A**	58MEB060−12	33,400	11.7	14.0
3250195	24ABB336(A,W)31	CNPV*3617A**	58MEB080−12	33,400	11.7	14.0
3250196	24ABB336(A,W)31	CNPV*3617A**	58MEB080−16	33,400	11.7	14.0
3250254	24ABB336(A,W)31	CNPV*3617A**	58MV(B,C)060−14	33,400	11.5	13.5
3250335	24ABB336(A,W)31	CNPV*3617A**	58PH*070−16	33,200	11.2	13.5
3250253	24ABB336(A,W)31	CNPV*3617A**+TDR		33,800	10.9	13.0
3250260	24ABB336(A,W)31	CNPV*3621A**	58CV(A,X)110−20	33,400	11.5	13.5
3250197	24ABB336(A,W)31	CNPV*3621A**	58MEB100−20	33,400	11.7	14.0
3250257	24ABB336(A,W)31	CNPV*3621A**	58MV(B,C)080−14	33,200	11.5	13.5
3250258	24ABB336(A,W)31	CNPV*3621A**	58MV(B,C)080−20	33,200	11.5	13.5
3250259	24ABB336(A,W)31	CNPV*3621A**	58MV(B,C)100−20	33,400	11.5	13.5
3250336	24ABB336(A,W)31	CNPV*3621A**	58PH*090−16	33,400	11.7	14.0
3250337	24ABB336(A,W)31	CNPV*3621A**	58PH*110−20	33,600	11.7	14.0
3250256	24ABB336(A,W)31	CNPV*3621A**+TDR		33,800	10.9	13.0
3250200	24ABB336(A,W)31	CNPV*4217A**	58CV(A,X)090−16	33,800	11.7	14.0
3250202	24ABB336(A,W)31	CNPV*4217A**	58MEB040−12	33,800	11.7	14.0

See notes on page 22

COMBINATION RATINGS CONTINUED

ARI Ref. No.	Model Number	Indoor Model	Furnace Model	Capacity	EER	SEER
3250203	24ABB336(A,W)31	CNPV*4217A**	58MEB060−12	33,800	11.7	14.0
3250204	24ABB336(A,W)31	CNPV*4217A**	58MEB080−12	33,800	11.7	14.0
3250205	24ABB336(A,W)31	CNPV*4217A**	58MEB080−16	33,800	11.7	14.0
3250199	24ABB336(A,W)31	CNPV*4217A**	58MV(B,C)060−14	33,800	11.7	14.0
3250201	24ABB336(A,W)31	CNPV*4217A**	58PH*070−16	33,800	11.7	14.0
3250198	24ABB336(A,W)31	CNPV*4217A**+TDR		33,800	11.0	13.0
3250265	24ABB336(A,W)31	CNPV*4221A**	58CV(A,X)110−20	33,800	11.7	14.0
3250206	24ABB336(A,W)31	CNPV*4221A**	58MEB100−20	33,800	11.7	14.0
3250262	24ABB336(A,W)31	CNPV*4221A**	58MV(B,C)080−14	33,600	11.5	13.5
3250263	24ABB336(A,W)31	CNPV*4221A**	58MV(B,C)080−20	33,600	11.7	14.0
3250264	24ABB336(A,W)31	CNPV*4221A**	58MV(B,C)100−20	33,800	11.7	14.0
3250338	24ABB336(A,W)31	CNPV*4221A**	58PH*090−16	34,000	12.0	14.0
3250339	24ABB336(A,W)31	CNPV*4221A**	58PH*110−20	34,000	12.0	14.0
3250261	24ABB336(A,W)31	CNPV*4221A**+TDR		34,000	10.9	13.0
3250230	24ABB336(A,W)31	CNPV*4821A**	58MEB100−20	34,400	12.2	14.5
3250232	24ABB336(A,W)31	CNPV*4821A**	58PH*090−16	34,600	12.2	14.5
3250233	24ABB336(A,W)31	CNPV*4821A**	58PH*110−20	34,800	12.2	14.5
3250298	24ABB336(A,W)31	CSPH*3612A**	58CV(A,X)070−12	33,600	11.7	14.0
3250299	24ABB336(A,W)31	CSPH*3612A**	58CV(A,X)090−16	33,600	12.0	14.0
3250300	24ABB336(A,W)31	CSPH*3612A**	58CV(A,X)110−20	33,600	12.0	14.0
3250301	24ABB336(A,W)31	CSPH*3612A**	58CV(A,X)135−22	33,600	12.0	14.0
3250302	24ABB336(A,W)31	CSPH*3612A**	58CV(A,X)155−22	33,600	12.0	14.0
3250217	24ABB336(A,W)31	CSPH*3612A**	58MEB040−12	33,800	11.7	14.0
3250218	24ABB336(A,W)31	CSPH*3612A**	58MEB060−12	33,800	11.7	14.0
3250219	24ABB336(A,W)31	CSPH*3612A**	58MEB080−12	33,800	11.7	14.0
3250220	24ABB336(A,W)31	CSPH*3612A**	58MEB080−16	33,800	11.7	14.0
3250221	24ABB336(A,W)31	CSPH*3612A**	58MEB100−20	33,800	11.7	14.0
3250293	24ABB336(A,W)31	CSPH*3612A**	58MV(B,C)060−14	33,600	12.0	14.0
3250294	24ABB336(A,W)31	CSPH*3612A**	58MV(B,C)080−14	33,400	11.7	14.0
3250295	24ABB336(A,W)31	CSPH*3612A**	58MV(B,C)080−20	33,600	11.7	14.0
3250296	24ABB336(A,W)31	CSPH*3612A**	58MV(B,C)100−20	33,400	12.0	14.0
3250297	24ABB336(A,W)31	CSPH*3612A**	58MV(B,C)120−20	33,600	12.0	14.0
3250292	24ABB336(A,W)31	CSPH*3612A**	58MVB040−14	33,600	11.5	13.5
3250346	24ABB336(A,W)31	CSPH*3612A**	58PH*070−16	34,000	11.5	13.5
3250347	24ABB336(A,W)31	CSPH*3612A**	58PH*090−16	34,400	12.0	14.0
3250348	24ABB336(A,W)31	CSPH*3612A**	58PH*110−20	34,400	12.0	14.0
3250291	24ABB336(A,W)31	CSPH*3612A**+TDR		33,800	11.0	13.0
3250310	24ABB336(A,W)31	CSPH*4212A**	58CV(A,X)070−12	33,600	11.7	14.0
3250311	24ABB336(A,W)31	CSPH*4212A**	58CV(A,X)090−16	33,600	12.0	14.0
3250312	24ABB336(A,W)31	CSPH*4212A**	58CV(A,X)110−20	33,800	12.0	14.0
3250313	24ABB336(A,W)31	CSPH*4212A**	58CV(A,X)135−22	33,600	12.0	14.0
3250314	24ABB336(A,W)31	CSPH*4212A**	58CV(A,X)155−22	33,800	12.0	14.0
3250222	24ABB336(A,W)31	CSPH*4212A**	58MEB040−12	33,800	11.7	14.0
3250223	24ABB336(A,W)31	CSPH*4212A**	58MEB060−12	33,800	11.7	14.0
3250224	24ABB336(A,W)31	CSPH*4212A**	58MEB080−12	33,800	11.7	14.0
3250225	24ABB336(A,W)31	CSPH*4212A**	58MEB080−16	33,800	11.7	14.0
3250226	24ABB336(A,W)31	CSPH*4212A**	58MEB100−20	33,800	11.7	14.0
3250305	24ABB336(A,W)31	CSPH*4212A**	58MV(B,C)060−14	33,800	12.0	14.0
3250306	24ABB336(A,W)31	CSPH*4212A**	58MV(B,C)080−14	33,600	11.7	14.0
3250307	24ABB336(A,W)31	CSPH*4212A**	58MV(B,C)080−20	33,600	12.0	14.0
3250308	24ABB336(A,W)31	CSPH*4212A**	58MV(B,C)100−20	33,800	12.0	14.0
3250309	24ABB336(A,W)31	CSPH*4212A**	58MV(B,C)120−20	33,600	12.0	14.0
3250304	24ABB336(A,W)31	CSPH*4212A**	58MVB040−14	33,600	11.7	14.0
3250349	24ABB336(A,W)31	CSPH*4212A**	58PH*070−16	34,400	11.7	14.0
3250350	24ABB336(A,W)31	CSPH*4212A**	58PH*090−16	34,600	12.0	14.0
3250351	24ABB336(A,W)31	CSPH*4212A**	58PH*110−20	34,800	12.0	14.0
3250303	24ABB336(A,W)31	CSPH*4212A**+TDR		34,000	11.0	13.0
3250320	24ABB336(A,W)31	FE4AN(B,F)003+UI		33,600	12.0	14.0
3250321	24ABB336(A,W)31	FE4AN(B,F)005+UI		34,800	12.0	14.0
3250322	24ABB336(A,W)31	FE4ANB006+UI		35,200	12.0	14.0
3250319	24ABB336(A,W)31	FE4ANF002+UI		33,400	11.5	13.5
3250323	24ABB336(A,W)31	FE5ANB004+UI		35,000	12.0	14.0
3250324	24ABB336(A,W)31	FF1ENP036		33,600	10.9	13.0
3250326	24ABB336(A,W)31	FV4BN(B,F)003		33,600	12.0	14.0
3250327	24ABB336(A,W)31	FV4BN(B,F)005		34,800	12.0	14.0
3250328	24ABB336(A,W)31	FV4BNB006		35,200	12.0	14.0
3250325	24ABB336(A,W)31	FV4BNF002		33,400	11.5	13.5
3250317	24ABB336(A,W)31	FX4CN(B,F)036		34,000	11.7	14.0
3250318	24ABB336(A,W)31	FX4CN(B,F)042		34,800	11.7	14.0
3250315	24ABB336(A,W)31	FY4ANF036		33,200	10.9	13.0
3250316	24ABB336(A,W)31	FY4ANF042		34,200	11.0	13.0
3249936	24ABB342(A,W)30	†CAP**4221A**+TDR		41,000	11.0	13.0
3250008	24ABB342(A,W)30	CAP**4221A**	58CV(A,X)110−20	40,500	11.2	13.5
3249965	24ABB342(A,W)30	CAP**4221A**	58MEB100−20	40,500	11.7	14.0
3250007	24ABB342(A,W)30	CAP**4221A**	58MV(B,C)080−14	40,000	11.2	13.5
3249937	24ABB342(A,W)30	CAP**4221A**	58PH*090−16	40,500	11.7	14.0
3249938	24ABB342(A,W)30	CAP**4221A**	58PH*110−20	40,500	12.0	14.0
3250011	24ABB342(A,W)30	CAP**4224A**	58CV(A,X)135−22	40,500	11.5	14.0

See notes on page 22

COMBINATION RATINGS CONTINUED

ARI Ref. No.	Model Number	Indoor Model	Furnace Model	Capacity	EER	SEER
3249966	24ABB342(A,W)30	CAP**4224A**	58MEB120−20	40,500	12.0	14.0
3250010	24ABB342(A,W)30	CAP**4224A**	58MV(B,C)040−14	40,000	11.2	13.5
3249939	24ABB342(A,W)30	CAP**4224A**	58PH*135−20	40,500	12.0	14.0
3250009	24ABB342(A,W)30	CAP**4224A**+TDR		41,000	11.0	13.0
3250014	24ABB342(A,W)30	CAP**4817A**	58CV(A,X)090−16	40,000	11.5	14.0
3249967	24ABB342(A,W)30	CAP**4817A**	58MEB040−12	41,000	11.7	14.0
3249968	24ABB342(A,W)30	CAP**4817A**	58MEB060−12	41,000	11.7	14.0
3249969	24ABB342(A,W)30	CAP**4817A**	58MEB080−12	41,000	11.7	14.0
3249970	24ABB342(A,W)30	CAP**4817A**	58MEB080−16	41,000	11.7	14.0
3250013	24ABB342(A,W)30	CAP**4817A**	58MV(B,C)060−14	40,000	11.5	14.0
3249940	24ABB342(A,W)30	CAP**4817A**	58PH*070−16	39,500	11.2	13.5
3250012	24ABB342(A,W)30	CAP**4817A**+TDR		40,500	11.0	13.2
3250017	24ABB342(A,W)30	CAP**4821A**	58CV(A,X)110−20	41,000	11.5	14.0
3249971	24ABB342(A,W)30	CAP**4821A**	58MEB100−20	41,000	12.0	14.0
3250016	24ABB342(A,W)30	CAP**4821A**	58MV(B,C)080−14	40,500	11.2	13.5
3249941	24ABB342(A,W)30	CAP**4821A**	58PH*090−16	41,000	12.0	14.0
3249942	24ABB342(A,W)30	CAP**4821A**	58PH*110−20	41,000	12.0	14.0
3250015	24ABB342(A,W)30	CAP**4821A**+TDR		41,500	11.0	13.2
3250020	24ABB342(A,W)30	CAP**4824A**	58CV(A,X)135−22	41,000	11.7	14.0
3250019	24ABB342(A,W)30	CAP**4824A**	58MV(B,C)040−14	41,000	11.2	13.5
3249943	24ABB342(A,W)30	CAP**4824A**	58PH*135−20	41,000	12.0	14.0
3250018	24ABB342(A,W)30	CAP**4824A**+TDR		41,500	11.0	13.2
3250036	24ABB342(A,W)30	CNPF*4818A**+TDR		41,500	11.0	13.2
3250032	24ABB342(A,W)30	CNPH*4221A**	58CV(A,X)070−12	40,500	11.2	13.5
3249983	24ABB342(A,W)30	CNPH*4221A**	58MEB040−12	40,500	11.7	14.0
3249984	24ABB342(A,W)30	CNPH*4221A**	58MEB060−12	40,500	11.5	13.5
3249985	24ABB342(A,W)30	CNPH*4221A**	58MEB080−12	40,500	11.7	14.0
3249986	24ABB342(A,W)30	CNPH*4221A**	58MEB080−16	40,000	11.7	14.0
3249987	24ABB342(A,W)30	CNPH*4221A**	58MEB100−20	40,500	11.7	14.0
3249988	24ABB342(A,W)30	CNPH*4221A**	58MEB120−20	40,500	11.7	14.0
3250031	24ABB342(A,W)30	CNPH*4221A**	58MV(B,C)040−14	40,000	11.2	13.5
3249949	24ABB342(A,W)30	CNPH*4221A**	58PH*070−16	40,000	11.2	13.2
3249950	24ABB342(A,W)30	CNPH*4221A**	58PH*090−16	40,500	11.7	14.0
3249951	24ABB342(A,W)30	CNPH*4221A**	58PH*110−20	40,500	12.0	14.0
3249952	24ABB342(A,W)30	CNPH*4221A**	58PH*135−20	40,500	11.7	14.0
3250030	24ABB342(A,W)30	CNPH*4221A**+TDR		41,000	11.0	13.0
3250035	24ABB342(A,W)30	CNPH*4821A**	58CV(A,X)070−12	41,000	11.2	13.5
3249989	24ABB342(A,W)30	CNPH*4821A**	58MEB040−12	41,000	11.7	14.0
3249990	24ABB342(A,W)30	CNPH*4821A**	58MEB060−12	41,000	11.7	14.0
3249991	24ABB342(A,W)30	CNPH*4821A**	58MEB080−12	41,000	11.7	14.0
3249992	24ABB342(A,W)30	CNPH*4821A**	58MEB080−16	41,000	11.7	14.0
3249993	24ABB342(A,W)30	CNPH*4821A**	58MEB100−20	41,000	12.0	14.0
3249994	24ABB342(A,W)30	CNPH*4821A**	58MEB120−20	41,000	12.0	14.0
3250034	24ABB342(A,W)30	CNPH*4821A**	58MV(B,C)040−14	40,500	11.2	13.5
3249953	24ABB342(A,W)30	CNPH*4821A**	58PH*070−16	41,000	11.2	13.5
3249954	24ABB342(A,W)30	CNPH*4821A**	58PH*090−16	41,000	12.0	14.0
3249955	24ABB342(A,W)30	CNPH*4821A**	58PH*110−20	41,000	12.0	14.0
3249956	24ABB342(A,W)30	CNPH*4821A**	58PH*135−20	41,000	12.0	14.0
3250033	24ABB342(A,W)30	CNPH*4821A**+TDR		41,500	11.0	13.2
3249974	24ABB342(A,W)30	CNPV*4217A**	58CV(A,X)090−16	40,500	11.7	14.0
3249976	24ABB342(A,W)30	CNPV*4217A**	58MEB040−12	41,000	11.7	14.0
3249977	24ABB342(A,W)30	CNPV*4217A**	58MEB060−12	41,000	11.7	14.0
3249978	24ABB342(A,W)30	CNPV*4217A**	58MEB080−12	41,000	11.7	14.0
3249979	24ABB342(A,W)30	CNPV*4217A**	58MEB080−16	40,500	11.7	14.0
3249973	24ABB342(A,W)30	CNPV*4217A**	58MV(B,C)060−14	40,500	11.5	13.5
3249975	24ABB342(A,W)30	CNPV*4217A**	58PH*070−16	40,500	11.2	13.5
3249972	24ABB342(A,W)30	CNPV*4217A**+TDR		41,000	11.0	13.0
3250023	24ABB342(A,W)30	CNPV*4221A**	58CV(A,X)110−20	40,500	11.5	14.0
3249980	24ABB342(A,W)30	CNPV*4221A**	58MEB100−20	40,500	11.7	14.0
3250022	24ABB342(A,W)30	CNPV*4221A**	58MV(B,C)080−14	40,000	11.2	13.5
3249944	24ABB342(A,W)30	CNPV*4221A**	58PH*090−16	40,500	11.7	14.0
3249945	24ABB342(A,W)30	CNPV*4221A**	58PH*110−20	40,500	12.0	14.0
3250021	24ABB342(A,W)30	CNPV*4221A**+TDR		41,000	11.0	13.0
3250026	24ABB342(A,W)30	CNPV*4821A**	58CV(A,X)110−20	41,000	11.5	14.0
3249981	24ABB342(A,W)30	CNPV*4821A**	58MEB100−20	41,000	12.0	14.0
3250025	24ABB342(A,W)30	CNPV*4821A**	58MV(B,C)080−14	40,500	11.2	13.5
3249946	24ABB342(A,W)30	CNPV*4821A**	58PH*090−16	41,000	12.0	14.0
3249947	24ABB342(A,W)30	CNPV*4821A**	58PH*110−20	41,000	12.0	14.0
3250024	24ABB342(A,W)30	CNPV*4821A**+TDR		41,500	11.0	13.2
3250029	24ABB342(A,W)30	CNPV*4824A**	58CV(A,X)135−22	41,000	11.7	14.0
3249982	24ABB342(A,W)30	CNPV*4824A**	58MEB120−20	41,000	12.0	14.0
3250028	24ABB342(A,W)30	CNPV*4824A**	58MV(B,C)040−14	41,000	11.2	13.5
3249948	24ABB342(A,W)30	CNPV*4824A**	58PH*135−20	41,000	12.0	14.0
3250027	24ABB342(A,W)30	CNPV*4824A**+TDR		41,500	11.0	13.2
3250039	24ABB342(A,W)30	CSPH*4212A**	58CV(A,X)070−12	40,500	11.2	13.5
3249995	24ABB342(A,W)30	CSPH*4212A**	58MEB040−12	41,000	11.7	14.0
3249996	24ABB342(A,W)30	CSPH*4212A**	58MEB060−12	41,000	11.7	14.0
3249997	24ABB342(A,W)30	CSPH*4212A**	58MEB080−12	41,000	11.7	14.0
3249998	24ABB342(A,W)30	CSPH*4212A**	58MEB080−16	41,000	11.7	14.0

See notes on page 22

COMBINATION RATINGS CONTINUED

ARI Ref. No.	Model Number	Indoor Model	Furnace Model	Capacity	EER	SEER
3249999	24ABB342(A,W)30	CSPH*4212A**	58MEB100−20	41,000	12.0	14.0
3250000	24ABB342(A,W)30	CSPH*4212A**	58MEB120−20	41,000	12.0	14.0
3250038	24ABB342(A,W)30	CSPH*4212A**	58MV(B,C)040−14	40,000	11.2	13.5
3249957	24ABB342(A,W)30	CSPH*4212A**	58PH*070−16	40,500	11.5	13.5
3249958	24ABB342(A,W)30	CSPH*4212A**	58PH*090−16	40,500	11.7	14.0
3249959	24ABB342(A,W)30	CSPH*4212A**	58PH*110−20	40,500	12.0	14.0
3249960	24ABB342(A,W)30	CSPH*4212A**	58PH*135−20	40,500	12.0	14.0
3250037	24ABB342(A,W)30	CSPH*4212A**+TDR		41,000	11.0	13.2
3250042	24ABB342(A,W)30	CSPH*4812A**	58CV(A,X)070−12	41,000	11.2	13.5
3250001	24ABB342(A,W)30	CSPH*4812A**	58MEB040−12	41,000	11.7	14.0
3250002	24ABB342(A,W)30	CSPH*4812A**	58MEB060−12	41,000	11.7	14.0
3250003	24ABB342(A,W)30	CSPH*4812A**	58MEB080−12	41,000	11.7	14.0
3250004	24ABB342(A,W)30	CSPH*4812A**	58MEB080−16	41,000	11.7	14.0
3250005	24ABB342(A,W)30	CSPH*4812A**	58MEB100−20	41,000	12.0	14.0
3250006	24ABB342(A,W)30	CSPH*4812A**	58MEB120−20	41,000	12.0	14.0
3250041	24ABB342(A,W)30	CSPH*4812A**	58MV(B,C)040−14	41,000	11.2	13.5
3249961	24ABB342(A,W)30	CSPH*4812A**	58PH*070−16	41,000	11.2	13.5
3249962	24ABB342(A,W)30	CSPH*4812A**	58PH*090−16	41,000	12.0	14.0
3249963	24ABB342(A,W)30	CSPH*4812A**	58PH*110−20	41,000	12.0	14.0
3249964	24ABB342(A,W)30	CSPH*4812A**	58PH*135−20	41,000	12.0	14.0
3250040	24ABB342(A,W)30	CSPH*4812A**+TDR		41,500	11.0	13.2
3250047	24ABB342(A,W)30	FV4BN(B,F)003		40,500	11.5	14.0
3250048	24ABB342(A,W)30	FV4BN(B,F)005		41,500	11.7	14.0
3250049	24ABB342(A,W)30	FV4BNB006		42,500	12.0	14.0
3250045	24ABB342(A,W)30	FX4CN(B,F)042		41,500	11.2	13.5
3250046	24ABB342(A,W)30	FX4CN(B,F)048		42,500	11.5	14.0
3250043	24ABB342(A,W)30	FY4ANF042		41,000	11.0	13.0
3250044	24ABB342(A,W)30	FY4ANF048		42,000	11.0	13.2
3250050	24ABB348(A,W)31	†CAP**4821A**+TDR		46,000	11.0	13.2
3250052	24ABB348(A,W)31	CAP**4817A**	58CV(A,X)090−16	45,000	11.5	13.5
3250143	24ABB348(A,W)31	CAP**4817A**	58MEB080−16	45,000	11.0	13.5
3250051	24ABB348(A,W)31	CAP**4817A**+TDR		45,000	11.0	13.2
3250055	24ABB348(A,W)31	CAP**4821A**	58CV(A,X)110−20	45,000	11.7	13.5
3250144	24ABB348(A,W)31	CAP**4821A**	58MEB100−20	45,000	11.7	14.0
3250053	24ABB348(A,W)31	CAP**4821A**	58MV(B,C)080−20	44,500	11.5	13.5
3250054	24ABB348(A,W)31	CAP**4821A**	58MV(B,C)100−20	45,000	11.2	13.5
3250056	24ABB348(A,W)31	CAP**4821A**	58PH*090−16	45,000	11.7	13.5
3250057	24ABB348(A,W)31	CAP**4821A**	58PH*110−20	45,000	11.7	14.0
3250060	24ABB348(A,W)31	CAP**4824A**	58CV(A,X)135−22	45,000	11.7	14.0
3250061	24ABB348(A,W)31	CAP**4824A**	58CV(A,X)155−22	45,000	12.0	14.0
3250145	24ABB348(A,W)31	CAP**4824A**	58MEB120−20	45,000	11.7	14.0
3250059	24ABB348(A,W)31	CAP**4824A**	58MV(B,C)120−20	45,000	11.5	13.5
3250062	24ABB348(A,W)31	CAP**4824A**	58PH*135−20	45,500	11.7	13.5
3250058	24ABB348(A,W)31	CAP**4824A**+TDR		45,500	11.0	13.2
3250066	24ABB348(A,W)31	CAP**6021A**	58CV(A,X)110−20	46,000	12.0	14.0
3250146	24ABB348(A,W)31	CAP**6021A**	58MEB100−20	45,000	12.0	14.0
3250064	24ABB348(A,W)31	CAP**6021A**	58MV(B,C)080−20	45,000	11.7	13.5
3250065	24ABB348(A,W)31	CAP**6021A**	58MV(B,C)100−20	46,000	11.7	13.5
3250067	24ABB348(A,W)31	CAP**6021A**	58PH*090−16	46,000	12.0	14.0
3250068	24ABB348(A,W)31	CAP**6021A**	58PH*110−20	46,000	12.0	14.0
3250063	24ABB348(A,W)31	CAP**6021A**+TDR		46,000	11.2	13.2
3250071	24ABB348(A,W)31	CAP**6024A**	58CV(A,X)135−22	46,000	12.0	14.0
3250072	24ABB348(A,W)31	CAP**6024A**	58CV(A,X)155−22	46,000	12.2	14.5
3250147	24ABB348(A,W)31	CAP**6024A**	58MEB120−20	45,000	12.0	14.0
3250070	24ABB348(A,W)31	CAP**6024A**	58MV(B,C)120−20	46,000	11.7	14.0
3250073	24ABB348(A,W)31	CAP**6024A**	58PH*135−20	46,000	12.0	14.0
3250069	24ABB348(A,W)31	CAP**6024A**+TDR		46,500	11.2	13.2
3250112	24ABB348(A,W)31	CNPF*4818A**+TDR		45,000	11.0	13.2
3250094	24ABB348(A,W)31	CNPH*4821A**	58CV(A,X)090−16	45,000	11.7	13.5
3250095	24ABB348(A,W)31	CNPH*4821A**	58CV(A,X)110−20	45,000	11.7	13.5
3250096	24ABB348(A,W)31	CNPH*4821A**	58CV(A,X)135−22	45,000	11.7	14.0
3250097	24ABB348(A,W)31	CNPH*4821A**	58CV(A,X)155−22	45,500	12.0	14.0
3250151	24ABB348(A,W)31	CNPH*4821A**	58MEB080−16	45,000	11.5	13.5
3250152	24ABB348(A,W)31	CNPH*4821A**	58MEB100−20	45,000	11.7	14.0
3250153	24ABB348(A,W)31	CNPH*4821A**	58MEB120−20	45,000	11.7	14.0
3250091	24ABB348(A,W)31	CNPH*4821A**	58MV(B,C)080−20	44,500	11.5	13.5
3250092	24ABB348(A,W)31	CNPH*4821A**	58MV(B,C)100−20	45,000	11.2	13.5
3250093	24ABB348(A,W)31	CNPH*4821A**	58MV(B,C)120−20	45,000	11.7	13.5
3250098	24ABB348(A,W)31	CNPH*4821A**	58PH*090−16	45,000	11.7	13.5
3250099	24ABB348(A,W)31	CNPH*4821A**	58PH*110−20	45,000	11.7	14.0
3250100	24ABB348(A,W)31	CNPH*4821A**	58PH*135−20	45,500	11.7	13.5
3250090	24ABB348(A,W)31	CNPH*4821A**+TDR		45,500	11.0	13.2
3250105	24ABB348(A,W)31	CNPH*6024A**	58CV(A,X)090−16	46,000	11.7	14.0
3250106	24ABB348(A,W)31	CNPH*6024A**	58CV(A,X)110−20	46,000	12.0	14.0
3250107	24ABB348(A,W)31	CNPH*6024A**	58CV(A,X)135−22	46,000	12.0	14.0
3250108	24ABB348(A,W)31	CNPH*6024A**	58CV(A,X)155−22	46,000	12.2	14.5
3250154	24ABB348(A,W)31	CNPH*6024A**	58MEB080−16	45,000	11.5	13.5
3250155	24ABB348(A,W)31	CNPH*6024A**	58MEB100−20	45,000	12.0	14.0

See notes on page 22

COMBINATION RATINGS CONTINUED

ARI Ref. No.	Model Number	Indoor Model	Furnace Model	Capacity	EER	SEER
3250156	24ABB348(A,W)31	CNPH*6024A**	58MEB120−20	45,000	12.0	14.0
3250102	24ABB348(A,W)31	CNPH*6024A**	58MV(B,C)080−20	45,500	11.7	13.5
3250103	24ABB348(A,W)31	CNPH*6024A**	58MV(B,C)100−20	46,000	11.7	13.5
3250104	24ABB348(A,W)31	CNPH*6024A**	58MV(B,C)120−20	46,000	11.7	14.0
3250109	24ABB348(A,W)31	CNPH*6024A**	58PH*090−16	46,000	11.7	14.0
3250110	24ABB348(A,W)31	CNPH*6024A**	58PH*110−20	46,000	12.0	14.0
3250111	24ABB348(A,W)31	CNPH*6024A**	58PH*135−20	46,000	12.0	14.0
3250101	24ABB348(A,W)31	CNPH*6024A**+TDR		46,500	11.2	13.2
3250077	24ABB348(A,W)31	CNPV*4821A**	58CV(A,X)110−20	45,000	11.7	13.5
3250148	24ABB348(A,W)31	CNPV*4821A**	58MEB100−20	45,000	11.7	14.0
3250075	24ABB348(A,W)31	CNPV*4821A**	58MV(B,C)080−20	44,500	11.5	13.5
3250076	24ABB348(A,W)31	CNPV*4821A**	58MV(B,C)100−20	45,000	11.2	13.5
3250078	24ABB348(A,W)31	CNPV*4821A**	58PH*090−16	45,000	11.7	13.5
3250079	24ABB348(A,W)31	CNPV*4821A**	58PH*110−20	45,000	11.7	14.0
3250074	24ABB348(A,W)31	CNPV*4821A**+TDR		45,500	11.0	13.2
3250082	24ABB348(A,W)31	CNPV*4824A**	58CV(A,X)135−22	45,000	11.7	14.0
3250083	24ABB348(A,W)31	CNPV*4824A**	58CV(A,X)155−22	45,000	12.0	14.0
3250149	24ABB348(A,W)31	CNPV*4824A**	58MEB120−20	45,000	11.7	14.0
3250081	24ABB348(A,W)31	CNPV*4824A**	58MV(B,C)120−20	45,000	11.5	13.5
3250084	24ABB348(A,W)31	CNPV*4824A**	58PH*135−20	45,500	11.7	13.5
3250080	24ABB348(A,W)31	CNPV*4824A**+TDR		45,500	11.0	13.2
3250087	24ABB348(A,W)31	CNPV*6024A**	58CV(A,X)135−22	46,000	12.0	14.0
3250088	24ABB348(A,W)31	CNPV*6024A**	58CV(A,X)155−22	46,000	12.2	14.5
3250150	24ABB348(A,W)31	CNPV*6024A**	58MEB120−20	45,000	12.0	14.0
3250086	24ABB348(A,W)31	CNPV*6024A**	58MV(B,C)120−20	46,000	11.7	14.0
3250089	24ABB348(A,W)31	CNPV*6024A**	58PH*135−20	46,000	12.0	14.0
3250085	24ABB348(A,W)31	CNPV*6024A**+TDR		46,500	11.2	13.2
3250117	24ABB348(A,W)31	CSPH*4812A**	58CV(A,X)090−16	45,500	11.7	13.5
3250118	24ABB348(A,W)31	CSPH*4812A**	58CV(A,X)110−20	45,000	11.7	13.5
3250119	24ABB348(A,W)31	CSPH*4812A**	58CV(A,X)135−22	45,000	11.7	14.0
3250120	24ABB348(A,W)31	CSPH*4812A**	58CV(A,X)155−22	45,000	12.0	14.0
3250157	24ABB348(A,W)31	CSPH*4812A**	58MEB080−16	45,000	11.5	13.5
3250158	24ABB348(A,W)31	CSPH*4812A**	58MEB100−20	45,000	11.7	14.0
3250159	24ABB348(A,W)31	CSPH*4812A**	58MEB120−20	45,000	11.7	14.0
3250114	24ABB348(A,W)31	CSPH*4812A**	58MV(B,C)080−20	44,500	11.5	13.5
3250115	24ABB348(A,W)31	CSPH*4812A**	58MV(B,C)100−20	45,000	11.2	13.5
3250116	24ABB348(A,W)31	CSPH*4812A**	58MV(B,C)120−20	45,000	11.5	13.5
3250121	24ABB348(A,W)31	CSPH*4812A**	58PH*090−16	45,000	11.7	13.5
3250122	24ABB348(A,W)31	CSPH*4812A**	58PH*110−20	45,000	11.7	14.0
3250123	24ABB348(A,W)31	CSPH*4812A**	58PH*135−20	45,500	11.7	13.5
3250113	24ABB348(A,W)31	CSPH*4812A**+TDR		46,000	11.0	13.2
3250128	24ABB348(A,W)31	CSPH*6012A**	58CV(A,X)090−16	46,000	12.0	14.0
3250129	24ABB348(A,W)31	CSPH*6012A**	58CV(A,X)110−20	46,000	12.0	14.0
3250130	24ABB348(A,W)31	CSPH*6012A**	58CV(A,X)135−22	46,000	12.0	14.0
3250131	24ABB348(A,W)31	CSPH*6012A**	58CV(A,X)155−22	46,000	12.2	14.5
3250160	24ABB348(A,W)31	CSPH*6012A**	58MEB080−16	45,000	11.7	14.0
3250161	24ABB348(A,W)31	CSPH*6012A**	58MEB100−20	45,000	12.0	14.0
3250162	24ABB348(A,W)31	CSPH*6012A**	58MEB120−20	45,000	12.0	14.0
3250125	24ABB348(A,W)31	CSPH*6012A**	58MV(B,C)080−20	45,500	11.7	13.5
3250126	24ABB348(A,W)31	CSPH*6012A**	58MV(B,C)100−20	46,000	11.7	13.5
3250127	24ABB348(A,W)31	CSPH*6012A**	58MV(B,C)120−20	46,000	11.7	14.0
3250132	24ABB348(A,W)31	CSPH*6012A**	58PH*090−16	46,000	12.0	14.0
3250133	24ABB348(A,W)31	CSPH*6012A**	58PH*110−20	46,000	12.0	14.0
3250134	24ABB348(A,W)31	CSPH*6012A**	58PH*135−20	46,000	12.0	14.0
3250124	24ABB348(A,W)31	CSPH*6012A**+TDR		46,500	11.2	13.2
3250139	24ABB348(A,W)31	FE4AN(B,F)005+UI		46,000	12.0	14.0
3250140	24ABB348(A,W)31	FE4ANB006+UI		46,500	12.2	14.5
3250141	24ABB348(A,W)31	FV4BN(B,F)005		46,000	12.0	14.0
3250142	24ABB348(A,W)31	FV4BNB006		46,500	12.2	14.5
3250137	24ABB348(A,W)31	FX4CN(B,F)048		46,000	12.0	14.0
3250138	24ABB348(A,W)31	FX4CN(B,F)060		47,500	12.0	14.0
3250136	24ABB348(A,W)31	FY4ANB060		46,500	11.2	13.2
3250135	24ABB348(A,W)31	FY4ANF048		45,500	11.2	13.2
3285396	24ABB360(A,W)32	†CAP**6024A**+TDR		57,500	11.0	13.0
3285397	24ABB360(A,W)32	CAP**6021A**	58MEB100−20	56,500	11.0	13.2
3285405	24ABB360(A,W)32	CAP**6021A**	58PH*110−20	56,500	11.2	13.2
3285404	24ABB360(A,W)32	CAP**6021A**+TDR		56,500	11.0	13.0
3285406	24ABB360(A,W)32	CAP**6024A**	58CV(A,X)135−22	56,500	11.0	13.2
3285407	24ABB360(A,W)32	CAP**6024A**	58CV(A,X)155−22	57,000	11.2	13.2
3285398	24ABB360(A,W)32	CAP**6024A**	58MEB120−20	56,500	11.0	13.2
3285412	24ABB360(A,W)32	CNPH*6024A**	58CV(A,X)135−22	56,500	11.2	13.2
3285413	24ABB360(A,W)32	CNPH*6024A**	58CV(A,X)155−22	57,000	11.2	13.2
3285400	24ABB360(A,W)32	CNPH*6024A**	58MEB100−20	56,500	11.0	13.2
3285401	24ABB360(A,W)32	CNPH*6024A**	58MEB120−20	56,500	11.0	13.2
3285414	24ABB360(A,W)32	CNPH*6024A**	58PH*110−20	56,500	11.2	13.2
3285411	24ABB360(A,W)32	CNPH*6024A**+TDR		57,000	10.9	13.0
3285409	24ABB360(A,W)32	CNPV*6024A**	58CV(A,X)135−22	56,500	11.2	13.2
3285410	24ABB360(A,W)32	CNPV*6024A**	58CV(A,X)155−22	57,000	11.2	13.2

See notes on page 22

COMBINATION RATINGS CONTINUED

ARI Ref. No.	Model Number	Indoor Model	Furnace Model	Capacity	EER	SEER
3285399	24ABB360(A,W)32	CNPV*6024A**	58MEB120−20	56,500	11.0	13.2
3285408	24ABB360(A,W)32	CNPV*6024A**+TDR		57,000	10.9	13.0
3285416	24ABB360(A,W)32	CSPH*6012A**	58CV(A,X)135−22	56,500	11.2	13.2
3285417	24ABB360(A,W)32	CSPH*6012A**	58CV(A,X)155−22	56,500	11.2	13.2
3285402	24ABB360(A,W)32	CSPH*6012A**	58MEB100−20	56,500	11.0	13.2
3285403	24ABB360(A,W)32	CSPH*6012A**	58MEB120−20	56,500	11.0	13.2
3285418	24ABB360(A,W)32	CSPH*6012A**	58PH*110−20	56,500	11.2	13.2
3285419	24ABB360(A,W)32	CSPH*6012A**	58PH*135−20	56,500	11.2	13.2
3285415	24ABB360(A,W)32	CSPH*6012A**+TDR		57,500	11.0	13.0
3285421	24ABB360(A,W)32	FE4ANB006+UI		57,500	11.5	13.5
3285422	24ABB360(A,W)32	FV4BNB006		57,500	11.5	13.5
3285420	24ABB360(A,W)32	FX4CN(B,F)060		57,500	11.2	13.2

* Tested combination
EER — Energy Efficiency Ratio
SEER — Seasonal Energy Efficiency Ratio
TDR — Time−Delay Relay
UI — User Interface
NOTES:
1. In most cases, only 1 method should be used to achieve TDR function. Using more than 1 method in a system may cause degradation in performance. Use either the accessory Time−Delay Relay KAATD0101TDR or a furnace equipped with TDR. Most Carrier furnaces are equipped with TDR.
2. Ratings are net values reflecting the effects of circulating fan motor heat. Supplemental electric heat is not included.
2. Tested outdoor/indoor combinations have been tested in accordance with DOE test procedures for central air conditioners. Ratings for other combinations are determined under DOE computer simulation procedures.
3. Determine actual CFM values obtainable for your system by referring to fan performance data in fan coil or furnace coil literature.
4. Do not apply with capillary tube coils as performance and reliability are affected.

DETAILED COOLING CAPACITIES#

EVAPORATOR AIR		CONDENSER ENTERING AIR TEMPERATURES °F (°C)																	
		75 (23.9)			85 (29.4)			95 (35)			105 (40.6)			115 (46.1)			125 (51.7)		
CFM	EWB °F (°C)	Capacity MBtuh		Total System KW**	Capacity MBtuh		Total System KW**	Capacity MBtuh		Total System KW**	Capacity MBtuh		Total System KW**	Capacity MBtuh		Total System KW**	Capacity MBtuh		Total System KW**
		Total	Sens‡		Total	Sens‡		Total	Sens‡		Total	Sens‡		Total	Sens‡		Total	Sens‡	
24ABB318(A,W)31 Outdoor Section With CAP**1814A** Indoor Section																			
525	72 (22.2)	20.79	10.51	1.27	19.89	10.18	1.42	18.93	9.83	1.58	17.94	9.47	1.77	16.87	9.09	1.97	15.67	8.67	2.20
	67 (19.4)	19.09	12.93	1.27	18.24	12.58	1.42	17.33	12.21	1.59	16.39	11.84	1.77	15.37	11.44	1.98	14.26	11.01	2.20
	63 (17.2)††	17.84	12.55	1.27	17.02	12.19	1.42	16.15	11.82	1.59	15.24	11.43	1.78	14.26	11.02	1.98	13.22	10.58	2.20
	62 (16.7)	17.53	15.32	1.27	16.74	14.95	1.42	15.91	14.57	1.59	15.04	14.16	1.78	14.17	14.17	1.98	13.33	13.33	2.20
	57 (13.9)	17.00	17.00	1.27	16.36	16.36	1.42	15.67	15.67	1.59	14.95	14.95	1.78	14.18	14.18	1.98	13.33	13.33	2.20
600	72 (22.2)	21.12	11.01	1.29	20.19	10.67	1.44	19.19	10.32	1.61	18.18	9.96	1.80	17.07	9.57	2.00	15.84	9.15	2.22
	67 (19.4)	19.42	13.74	1.29	18.54	13.39	1.45	17.60	13.02	1.61	16.63	12.65	1.80	15.59	12.24	2.00	14.44	11.80	2.23
	63 (17.2)††	18.17	13.32	1.30	17.32	12.96	1.45	16.43	12.58	1.62	15.49	12.19	1.80	14.48	11.77	2.01	13.40	11.33	2.23
	62 (16.7)	17.93	16.44	1.30	17.12	16.06	1.45	16.30	16.21	1.62	15.53	15.53	1.80	14.71	14.71	2.01	13.81	13.81	2.23
	57 (13.9)	17.70	17.70	1.30	17.02	17.02	1.45	16.29	16.29	1.62	15.53	15.53	1.80	14.71	14.71	2.01	13.81	13.81	2.23
675	72 (22.2)	21.35	11.48	1.32	20.39	11.14	1.47	19.37	10.79	1.64	18.34	10.43	1.83	17.20	10.04	2.03	15.94	9.61	2.25
	67 (19.4)	19.66	14.52	1.32	18.76	14.17	1.47	17.79	13.80	1.64	16.81	13.42	1.83	15.74	13.01	2.03	14.58	12.56	2.25
	63 (17.2)††	18.41	14.06	1.32	17.55	13.70	1.48	16.63	13.31	1.64	15.67	12.92	1.83	14.64	12.49	2.03	13.54	12.03	2.26
	62 (16.7)	18.28	18.11	1.32	17.55	17.55	1.48	16.79	16.79	1.64	15.99	15.99	1.83	15.13	15.13	2.03	14.18	14.18	2.25
	57 (13.9)	18.26	18.26	1.32	17.55	17.55	1.48	16.79	16.79	1.64	15.99	15.99	1.83	15.13	15.13	2.03	14.18	14.18	2.25

COOLING INDOOR MODEL	CAPACITY	POWER	FURNACE MODEL
*CAP**1814A**	1.00	1.00	
CAP**2414A**	1.02	1.01	
CAP**2417A**	1.02	1.01	
CNPF*2418A**	1.02	1.01	
CNPH*2417A**	1.02	1.01	
CNPV*1814A**	1.00	1.00	
CNPV*2414A**	1.02	1.01	
CNPV*2417A**	1.02	1.01	
CSPH*2412A**	1.02	1.01	
FE4ANF002	0.98	0.88	
FF1ENP018	0.99	0.99	
FF1ENP024	0.99	0.99	
FV4BNF002	0.98	0.88	
FX4CNF018	1.02	0.93	
FX4CNF024	1.02	0.91	
FY4ANF018	1.01	1.01	
FY4ANF024	1.02	1.02	
CAP**1814A**	0.99	0.90	58CV(A,X)070–12
CAP**2414A**	1.01	0.90	58CV(A,X)070–12
CNPH*2417A**	1.01	0.90	58CV(A,X)070–12
CNPV*1814A**	0.99	0.90	58CV(A,X)070–12
CNPV*2414A**	1.01	0.90	58CV(A,X)070–12
CSPH*2412A**	1.02	0.91	58CV(A,X)070–12
CAP**2417A**	1.01	0.90	58CV(A,X)090–16
CNPH*2417A**	1.01	0.90	58CV(A,X)090–16
CNPV*2417A**	1.01	0.90	58CV(A,X)090–16
CSPH*2412A**	1.02	0.91	58CV(A,X)090–16
CAP**2417A**	1.02	0.89	58MEB040–12
CNPH*2417A**	1.02	0.91	58MEB040–12
CNPV*2417A**	1.02	0.91	58MEB040–12
CSPH*2412A**	1.02	0.91	58MEB040–12
CAP**2417A**	1.02	0.89	58MEB060–12
CNPH*2417A**	1.02	0.91	58MEB060–12
CNPV*2417A**	1.02	0.91	58MEB060–12
CSPH*2412A**	1.02	0.91	58MEB060–12
CAP**2417A**	1.01	0.90	58MV(B,C)060–14
CNPH*2417A**	1.01	0.90	58MV(B,C)060–14

COOLING INDOOR MODEL	CAPACITY	POWER	FURNACE MODEL
CNPV*2417A**	1.01	0.90	58MV(B,C)060–14
CSPH*2412A**	1.02	0.91	58MV(B,C)060–14
CNPH*2417A**	1.01	0.90	58MV(B,C)080–14
CSPH*2412A**	1.02	0.91	58MV(B,C)080–14
CNPH*2417A**	1.01	0.90	58MVB040–14
CSPH*2412A**	1.01	0.90	58MVB040–14
CAP**1814A**	1.01	0.92	58PH*045–08
CAP**2414A**	1.02	0.91	58PH*045–08
CNPH*2417A**	1.01	0.90	58PH*045–08
CNPV*1814A**	1.01	0.92	58PH*045–08
CNPV*2414A**	1.02	0.91	58PH*045–08
CSPH*2412A**	1.02	0.91	58PH*045–08

See notes on page 31

DETAILED COOLING CAPACITIES# CONTINUED

EVAPORATOR AIR		CONDENSER ENTERING AIR TEMPERATURES °F (°C)																	
		75 (23.9)			85 (29.4)			95 (35)			105 (40.6)			115 (46.1)			125 (51.7)		
CFM	EWB °F (°C)	Capacity MBtuh		Total System KW**	Capacity MBtuh		Total System KW**	Capacity MBtuh		Total System KW**	Capacity MBtuh		Total System KW**	Capacity MBtuh		Total System KW**	Capacity MBtuh		Total System KW**
		Total	Sens‡		Total	Sens‡		Total	Sens‡		Total	Sens‡		Total	Sens‡		Total	Sens‡	
24ABB324(A,W)31 Outdoor Section With CAP**2414A** Indoor Section																			
700	72 (22.2)	27.09	13.27	1.65	25.82	12.82	1.85	24.63	12.41	2.06	23.42	12.00	2.30	22.08	11.54	2.56	20.57	11.04	2.84
	67 (19.4)	24.89	16.41	1.65	23.83	15.99	1.84	22.71	15.56	2.05	21.55	15.13	2.29	20.30	14.66	2.56	18.89	14.14	2.84
	63 (17.2)††	23.39	15.98	1.64	22.38	15.55	1.84	21.29	15.11	2.05	20.18	14.66	2.29	18.98	14.17	2.56	17.65	13.64	2.85
	62 (16.7)	23.01	19.56	1.64	22.03	19.14	1.84	20.99	18.67	2.05	19.94	18.19	2.29	18.91	18.91	2.56	17.82	17.82	2.84
	57 (13.9)	22.46	22.46	1.64	21.66	21.66	1.83	20.79	20.79	2.05	19.89	19.89	2.29	18.91	18.91	2.56	17.82	17.82	2.84
800	72 (22.2)	27.52	13.92	1.69	26.15	13.46	1.88	24.91	13.04	2.10	23.67	12.62	2.33	22.29	12.16	2.59	20.73	11.65	2.88
	67 (19.4)	25.25	17.44	1.68	24.16	17.03	1.88	23.00	16.60	2.09	21.82	16.16	2.33	20.53	15.69	2.59	19.09	15.16	2.88
	63 (17.2)††	23.76	16.95	1.68	22.72	16.53	1.87	21.60	16.08	2.09	20.46	15.63	2.33	19.22	15.14	2.59	17.86	14.60	2.88
	62 (16.7)	23.47	20.99	1.68	22.49	20.52	1.87	21.52	21.52	2.09	20.58	20.58	2.33	19.54	19.54	2.59	18.38	18.38	2.88
	57 (13.9)	23.30	23.30	1.68	22.44	22.44	1.87	21.53	21.53	2.09	20.58	20.58	2.33	19.54	19.54	2.59	18.38	18.38	2.88
900	72 (22.2)	27.79	14.53	1.73	26.41	14.07	1.92	25.10	13.63	2.13	23.83	13.21	2.37	22.42	12.76	2.63	20.83	12.24	2.91
	67 (19.4)	25.51	18.45	1.72	24.38	18.03	1.91	23.21	17.59	2.13	22.00	17.15	2.37	20.68	16.66	2.63	19.22	16.12	2.91
	63 (17.2)††	24.03	17.89	1.72	22.96	17.47	1.91	21.82	17.01	2.12	20.66	16.55	2.36	19.39	16.05	2.63	18.01	15.49	2.92
	62 (16.7)	23.97	23.97	1.72	23.07	23.07	1.91	22.11	22.11	2.12	21.12	21.12	2.36	20.03	20.03	2.63	18.82	18.82	2.91
	57 (13.9)	23.96	23.96	1.72	23.07	23.07	1.91	22.11	22.11	2.12	21.12	21.12	2.36	20.04	20.04	2.63	18.82	18.82	2.91

COOLING INDOOR MODEL	CAPACITY	POWER	FURNACE MODEL
*CAP**2414A**	1.00	1.00	
CAP**2417A**	1.00	1.00	
CAP**3014A**	1.01	1.01	
CAP**3017A**	1.01	1.01	
CNPF*2418A**	1.00	1.00	
CNPH*2417A**	1.00	1.00	
CNPH*3017A**	1.01	1.01	
CNPV*2414A**	1.00	1.00	
CNPV*2417A**	1.00	1.00	
CNPV*3014A**	1.01	1.01	
CNPV*3017A**	1.01	1.01	
CSPH*2412A**	1.00	1.00	
CSPH*3012A**	1.01	1.01	
FE4AN(B,F)003	1.02	0.92	
FE4ANF002	0.98	0.90	
FF1ENP024	0.98	0.98	
FF1ENP030	1.00	1.01	
FV4BN(B,F)003	1.02	0.92	
FV4BNF002	0.98	0.90	
FX4CNF024	1.01	0.95	
FX4CNF030	1.02	0.93	
FY4ANF024	1.00	1.00	
FY4ANF030	1.01	1.01	
CAP**2414A**	0.99	0.91	58CV(A,X)070–12
CAP**3014A**	1.00	0.92	58CV(A,X)070–12
CNPH*2417A**	0.99	0.93	58CV(A,X)070–12
CNPH*3017A**	1.00	0.92	58CV(A,X)070–12
CNPV*2414A**	0.99	0.93	58CV(A,X)070–12
CNPV*3014A**	1.00	0.92	58CV(A,X)070–12
CSPH*2412A**	1.00	0.92	58CV(A,X)070–12
CSPH*3012A**	1.00	0.92	58CV(A,X)070–12
CAP**2417A**	1.00	0.90	58CV(A,X)090–16
CAP**3017A**	1.01	0.91	58CV(A,X)090–16
CNPH*2417A**	0.99	0.91	58CV(A,X)090–16
CNPH*3017A**	1.01	0.91	58CV(A,X)090–16
CNPV*2417A**	0.99	0.91	58CV(A,X)090–16
CNPV*3017A**	1.01	0.91	58CV(A,X)090–16
CSPH*2412A**	1.01	0.92	58CV(A,X)090–16
CSPH*3012A**	1.01	0.91	58CV(A,X)090–16

COOLING INDOOR MODEL	CAPACITY	POWER	FURNACE MODEL
CNPH*2417A**	0.99	0.93	58CV(A,X)110–20
CNPH*3017A**	1.01	0.91	58CV(A,X)110–20
CSPH*2412A**	1.01	0.92	58CV(A,X)110–20
CSPH*3012A**	1.01	0.91	58CV(A,X)110–20
CNPH*2417A**	0.99	0.91	58CV(A,X)135–22
CNPH*3017A**	1.01	0.91	58CV(A,X)135–22
CSPH*2412A**	1.01	0.92	58CV(A,X)135–22
CSPH*3012A**	1.01	0.91	58CV(A,X)135–22
CNPH*2417A**	0.99	0.91	58CV(A,X)155–22
CNPH*3017A**	1.01	0.91	58CV(A,X)155–22
CSPH*2412A**	1.01	0.92	58CV(A,X)155–22
CSPH*3012A**	1.01	0.91	58CV(A,X)155–22
CAP**2417A**	1.02	0.92	58MEB040–12
CAP**3017A**	1.03	0.93	58MEB040–12
CNPH*2417A**	1.01	0.92	58MEB040–12
CNPH*3017A**	1.03	0.93	58MEB040–12
CNPV*2417A**	1.01	0.92	58MEB040–12
CNPV*3017A**	1.03	0.93	58MEB040–12
CSPH*2412A**	1.02	0.92	58MEB040–12
CSPH*3012A**	1.03	0.93	58MEB040–12
CAP**2417A**	1.02	0.92	58MEB060–12
CAP**3017A**	1.03	0.93	58MEB060–12
CNPH*2417A**	1.01	0.92	58MEB060–12
CNPH*3017A**	1.03	0.93	58MEB060–12
CNPV*2417A**	1.01	0.92	58MEB060–12
CNPV*3017A**	1.03	0.93	58MEB060–12
CSPH*2412A**	1.02	0.92	58MEB060–12
CSPH*3012A**	1.03	0.93	58MEB060–12
CAP**2417A**	1.01	0.91	58MEB080–12
CAP**3017A**	1.03	0.93	58MEB080–12
CNPH*2417A**	1.01	0.92	58MEB080–12
CNPH*3017A**	1.03	0.93	58MEB080–12
CNPV*2417A**	1.01	0.92	58MEB080–12
CNPV*3017A**	1.03	0.93	58MEB080–12
CSPH*2412A**	1.02	0.92	58MEB080–12
CSPH*3012A**	1.03	0.93	58MEB080–12
CAP**2417A**	1.01	0.91	58MV(B,C)060–14
CAP**3017A**	1.02	0.92	58MV(B,C)060–14
CNPH*2417A**	1.01	0.92	58MV(B,C)060–14

COOLING INDOOR MODEL	CAPACITY	POWER	FURNACE MODEL
CNPH*3017A**	1.02	0.92	58MV(B,C)060–14
CNPV*2417A**	1.01	0.92	58MV(B,C)060–14
CNPV*3017A**	1.02	0.92	58MV(B,C)060–14
CSPH*2412A**	1.02	0.93	58MV(B,C)060–14
CSPH*3012A**	1.03	0.93	58MV(B,C)060–14
CNPH*2417A**	0.99	0.91	58MV(B,C)080–14
CNPH*3017A**	1.01	0.91	58MV(B,C)080–14
CSPH*2412A**	1.00	0.92	58MV(B,C)080–14
CSPH*3012A**	1.01	0.91	58MV(B,C)080–14
CNPH*2417A**	0.98	0.90	58MV(B,C)080–20
CNPH*3017A**	1.00	0.90	58MV(B,C)080–20
CSPH*2412A**	1.00	0.92	58MV(B,C)080–20
CSPH*3012A**	1.00	0.90	58MV(B,C)080–20
CNPH*2417A**	0.99	0.91	58MV(B,C)100–20
CNPH*3017A**	1.01	0.91	58MV(B,C)100–20
CSPH*2412A**	1.01	0.92	58MV(B,C)100–20
CSPH*3012A**	1.01	0.91	58MV(B,C)100–20
CNPH*2417A**	1.00	0.92	58MV(B,C)120–20
CNPH*3017A**	1.01	0.91	58MV(B,C)120–20
CSPH*2412A**	1.01	0.92	58MV(B,C)120–20
CSPH*3012A**	1.02	0.92	58MV(B,C)120–20
CNPH*2417A**	0.99	0.93	58MVB040–14
CNPH*3017A**	1.01	0.91	58MVB040–14
CSPH*2412A**	1.01	0.92	58MVB040–14
CSPH*3012A**	1.01	0.91	58MVB040–14
CAP**2414A**	1.00	0.94	58PH*045–08
CAP**3014A**	1.02	0.93	58PH*045–08
CAP**3617A**	1.02	0.92	58PH*045–08
CNPH*2417A**	1.00	0.94	58PH*045–08
CNPH*3017A**	1.02	0.93	58PH*045–08
CNPV*2414A**	1.00	0.94	58PH*045–08
CNPV*3014A**	1.01	0.92	58PH*045–08
CNPV*3617A**	1.02	0.92	58PH*045–08
CSPH*2412A**	1.01	0.92	58PH*045–08
CSPH*3012A**	1.02	0.93	58PH*045–08

See notes on page 31

DETAILED COOLING CAPACITIES# CONTINUED

EVAPORATOR AIR		CONDENSER ENTERING AIR TEMPERATURES °F (°C)																	
		75 (23.9)			85 (29.4)			95 (35)			105 (40.6)			115 (46.1)			125 (51.7)		
CFM	EWB °F (°C)	Capacity MBtuh		Total System KW**	Capacity MBtuh		Total System KW**	Capacity MBtuh		Total System KW**	Capacity MBtuh		Total System KW**	Capacity MBtuh		Total System KW**	Capacity MBtuh		Total System KW**
		Total	Sens‡		Total	Sens‡		Total	Sens‡		Total	Sens‡		Total	Sens‡		Total	Sens‡	
24ABB330(A,W)31 Outdoor Section With CAP**3014A** Indoor Section																			
875	72 (22.2)	32.18	16.57	2.04	30.84	16.09	2.25	29.42	15.59	2.49	27.93	15.07	2.76	26.28	14.50	3.05	24.43	13.86	3.36
	67 (19.4)	29.70	20.70	2.03	28.44	20.20	2.25	27.08	19.68	2.49	25.67	19.13	2.75	24.11	18.54	3.04	22.39	17.88	3.35
	63 (17.2)††	27.91	20.13	2.03	26.69	19.62	2.25	25.39	19.07	2.49	24.02	18.50	2.75	22.52	17.88	3.04	20.88	17.21	3.35
	62 (16.7)	27.50	24.80	2.03	26.34	24.26	2.25	25.11	23.67	2.49	23.94	23.94	2.75	22.71	22.71	3.04	21.35	21.35	3.35
	57 (13.9)	27.10	27.10	2.03	26.12	26.12	2.25	25.05	25.05	2.49	23.94	23.94	2.75	22.71	22.71	3.04	21.35	21.35	3.35
1000	72 (22.2)	32.58	17.38	2.08	31.18	16.89	2.30	29.72	16.38	2.54	28.19	15.86	2.81	26.50	15.29	3.09	24.59	14.65	3.40
	67 (19.4)	30.08	22.03	2.08	28.79	21.53	2.30	27.40	21.00	2.54	25.96	20.45	2.80	24.36	19.85	3.09	22.60	19.17	3.40
	63 (17.2)††	28.31	21.38	2.08	27.06	20.87	2.30	25.72	20.31	2.53	24.32	19.74	2.80	22.78	19.11	3.09	21.11	18.42	3.40
	62 (16.7)	28.07	27.82	2.08	27.00	27.00	2.29	25.89	25.89	2.53	24.72	24.72	2.80	23.42	23.42	3.09	21.98	21.98	3.40
	57 (13.9)	28.04	28.04	2.08	27.01	27.01	2.29	25.89	25.89	2.53	24.72	24.72	2.80	23.42	23.42	3.09	21.98	21.98	3.40
1125	72 (22.2)	32.83	18.14	2.13	31.40	17.65	2.35	29.91	17.14	2.59	28.35	16.62	2.85	26.63	16.04	3.14	24.68	15.40	3.45
	67 (19.4)	30.36	23.30	2.13	29.03	22.80	2.34	27.62	22.26	2.58	26.15	21.70	2.85	24.54	21.08	3.14	22.76	20.38	3.45
	63 (17.2)††	28.59	22.57	2.12	27.32	22.05	2.34	25.95	21.49	2.58	24.53	20.90	2.85	22.98	20.26	3.13	21.29	19.53	3.44
	62 (16.7)	28.79	28.79	2.12	27.71	27.71	2.34	26.54	26.54	2.58	25.33	25.33	2.85	23.98	23.98	3.13	22.47	22.47	3.44
	57 (13.9)	28.79	28.79	2.12	27.71	27.71	2.34	26.55	26.55	2.58	25.33	25.33	2.85	23.98	23.98	3.13	22.47	22.47	3.44

COOLING INDOOR MODEL	CAPACITY	POWER	FURNACE MODEL
*CAP**3014A**	1.00	1.00	
CAP**3017A**	1.00	1.00	
CAP**3614A**	1.00	1.00	
CAP**3617A**	1.01	1.01	
CAP**3621A**	1.01	1.01	
CNPF*3618A**	1.00	1.00	
CNPH*3017A**	1.00	1.00	
CNPH*3617A**	1.00	1.00	
CNPV*3014A**	1.00	1.00	
CNPV*3017A**	1.00	1.00	
CNPV*3617A**	1.00	1.00	
CNPV*3621A**	1.00	1.00	
CSPH*3012A**	1.00	1.00	
CSPH*3612A**	1.00	1.00	
FE4AN(B,F)003	1.01	0.89	
FE4AN(B,F)005	1.04	0.92	
FE4ANF002	1.01	0.93	
FF1ENP036	1.00	0.99	
FV4BN(B,F)003	1.01	0.89	
FV4BN(B,F)005	1.04	0.92	
FV4BNF002	0.98	0.90	
FX4CN(B,F)036	1.01	0.95	
FX4CNF030	1.01	0.93	
FY4ANF030	0.99	0.98	
CAP**3014A**	0.99	0.92	58CV(A,X)070–12
CAP**3614A**	1.00	0.92	58CV(A,X)070–12
CNPH*3017A**	0.99	0.92	58CV(A,X)070–12
CNPH*3617A**	1.00	0.92	58CV(A,X)070–12
CNPV*3014A**	0.99	0.92	58CV(A,X)070–12
CSPH*3012A**	0.99	0.92	58CV(A,X)070–12
CSPH*3612A**	1.01	0.91	58CV(A,X)070–12
CAP**3017A**	1.00	0.90	58CV(A,X)090–16
CAP**3617A**	1.00	0.90	58CV(A,X)090–16
CNPH*3017A**	1.00	0.92	58CV(A,X)090–16
CNPH*3617A**	1.00	0.92	58CV(A,X)090–16
CNPV*3017A**	1.00	0.92	58CV(A,X)090–16
CNPV*3617A**	1.00	0.92	58CV(A,X)090–16
CNPV*4217A**	1.01	0.90	58CV(A,X)090–16
CSPH*3012A**	1.00	0.92	58CV(A,X)090–16

COOLING INDOOR MODEL	CAPACITY	POWER	FURNACE MODEL
CSPH*3612A**	1.01	0.91	58CV(A,X)090–16
CAP**3621A**	1.01	0.91	58CV(A,X)110–20
CNPH*3017A**	1.00	0.92	58CV(A,X)110–20
CNPH*3617A**	1.00	0.92	58CV(A,X)110–20
CNPV*3621A**	1.00	0.92	58CV(A,X)110–20
CSPH*3012A**	1.01	0.93	58CV(A,X)110–20
CSPH*3612A**	1.01	0.91	58CV(A,X)110–20
CNPH*3017A**	1.00	0.90	58CV(A,X)135–22
CNPH*3617A**	1.00	0.90	58CV(A,X)135–22
CSPH*3012A**	1.01	0.93	58CV(A,X)135–22
CSPH*3612A**	1.01	0.91	58CV(A,X)135–22
CNPH*3017A**	1.00	0.90	58CV(A,X)155–22
CNPH*3617A**	1.00	0.90	58CV(A,X)155–22
CSPH*3012A**	1.01	0.91	58CV(A,X)155–22
CSPH*3612A**	1.01	0.91	58CV(A,X)155–22
CAP**3017A**	1.01	0.91	58MEB040–12
CAP**3617A**	1.01	0.91	58MEB040–12
CNPH*3017A**	1.01	0.91	58MEB040–12
CNPH*3617A**	0.99	0.89	58MEB040–12
CNPV*3017A**	1.01	0.91	58MEB040–12
CNPV*3617A**	0.99	0.89	58MEB040–12
CSPH*3012A**	1.01	0.91	58MEB040–12
CSPH*3612A**	1.00	0.90	58MEB040–12
CAP**3017A**	1.01	0.94	58MEB060–12
CAP**3617A**	1.01	0.91	58MEB060–12
CNPH*3017A**	1.01	0.94	58MEB060–12
CNPH*3617A**	0.99	0.89	58MEB060–12
CNPV*3017A**	1.01	0.94	58MEB060–12
CNPV*3617A**	0.99	0.89	58MEB060–12
CSPH*3012A**	1.01	0.94	58MEB060–12
CSPH*3612A**	1.00	0.90	58MEB060–12
CAP**3017A**	1.01	0.91	58MEB080–12
CAP**3617A**	1.01	0.91	58MEB080–12
CNPH*3017A**	1.01	0.91	58MEB080–12
CNPH*3617A**	0.99	0.89	58MEB080–12
CNPV*3017A**	1.01	0.91	58MEB080–12
CNPV*3617A**	0.99	0.89	58MEB080–12
CSPH*3012A**	1.01	0.93	58MEB080–12
CSPH*3612A**	1.00	0.90	58MEB080–12

COOLING INDOOR MODEL	CAPACITY	POWER	FURNACE MODEL
CAP**3017A**	1.01	0.94	58MEB080–16
CAP**3617A**	1.02	0.94	58MEB080–16
CNPH*3017A**	1.01	0.94	58MEB080–16
CNPH*3617A**	1.01	0.94	58MEB080–16
CNPV*3017A**	1.01	0.94	58MEB080–16
CNPV*3617A**	1.01	0.94	58MEB080–16
CSPH*3012A**	1.01	0.94	58MEB080–16
CSPH*3612A**	1.01	0.91	58MEB080–16
CAP**3017A**	1.00	0.92	58MV(B,C)060–14
CAP**3617A**	1.01	0.91	58MV(B,C)060–14
CNPH*3017A**	1.01	0.93	58MV(B,C)060–14
CNPH*3617A**	1.01	0.93	58MV(B,C)060–14
CNPV*3017A**	1.01	0.93	58MV(B,C)060–14
CNPV*3617A**	1.01	0.93	58MV(B,C)060–14
CSPH*3012A**	1.01	0.93	58MV(B,C)060–14
CSPH*3612A**	1.02	0.92	58MV(B,C)060–14
CAP**3621A**	1.00	0.92	58MV(B,C)080–14
CNPH*3017A**	0.99	0.92	58MV(B,C)080–14
CNPH*3617A**	0.99	0.92	58MV(B,C)080–14
CNPV*3621A**	0.99	0.92	58MV(B,C)080–14
CSPH*3012A**	1.00	0.92	58MV(B,C)080–14
CSPH*3612A**	1.01	0.91	58MV(B,C)080–14
CAP**3621A**	1.00	0.90	58MV(B,C)080–20
CNPH*3017A**	1.00	0.92	58MV(B,C)080–20
CNPH*3617A**	1.00	0.92	58MV(B,C)080–20
CNPV*3621A**	1.00	0.92	58MV(B,C)080–20
CSPH*3012A**	1.00	0.92	58MV(B,C)080–20
CSPH*3612A**	1.01	0.91	58MV(B,C)080–20
CAP**3621A**	0.99	0.92	58MV(B,C)100–20
CNPH*3017A**	0.99	0.92	58MV(B,C)100–20
CNPH*3617A**	0.99	0.92	58MV(B,C)100–20
CNPV*3621A**	0.99	0.92	58MV(B,C)100–20
CSPH*3012A**	0.99	0.92	58MV(B,C)100–20
CSPH*3612A**	1.01	0.91	58MV(B,C)100–20
CNPH*3017A**	1.00	0.90	58MV(B,C)120–20
CNPH*3617A**	1.00	0.90	58MV(B,C)120–20
CSPH*3012A**	1.01	0.93	58MV(B,C)120–20
CSPH*3612A**	1.02	0.92	58MV(B,C)120–20
CNPH*3017A**	1.00	0.92	58MVB040–14

DETAILED COOLING CAPACITIES# CONTINUED

24ABB330(A,W)31 Outdoor Section With CAP3014A** Indoor Section**

COOLING INDOOR MODEL	CAPACITY	POWER	FURNACE MODEL
CNPH*3617A**	1.00	0.92	58MVB040 – 14
CSPH*3012A**	1.00	0.92	58MVB040 – 14
CSPH*3612A**	1.01	0.91	58MVB040 – 14
CAP**3017A**	1.00	0.92	58PH*070 – 16
CAP**3617A**	1.01	0.93	58PH*070 – 16
CNPH*3017A**	1.00	0.94	58PH*070 – 16
CNPH*3617A**	1.00	0.94	58PH*070 – 16
CNPV*3017A**	1.00	0.94	58PH*070 – 16
CNPV*3617A**	1.00	0.94	58PH*070 – 16
CSPH*3012A**	1.01	0.95	58PH*070 – 16
CSPH*3612A**	1.01	0.94	58PH*070 – 16
CAP**3621A**	1.01	0.91	58PH*090 – 16
CNPH*3017A**	1.01	0.93	58PH*090 – 16
CNPH*3617A**	1.01	0.93	58PH*090 – 16
CNPV*3621A**	1.01	0.93	58PH*090 – 16
CNPV*4821A**	1.04	0.92	58PH*090 – 16
CSPH*3012A**	1.01	0.93	58PH*090 – 16
CSPH*3612A**	1.01	0.91	58PH*090 – 16

See notes on page 31

DETAILED COOLING CAPACITIES# CONTINUED

EVAPORATOR AIR		CONDENSER ENTERING AIR TEMPERATURES °F (°C)																	
		75 (23.9)			85 (29.4)			95 (35)			105 (40.6)			115 (46.1)			125 (51.7)		
CFM	EWB °F (°C)	Capacity MBtuh		Total System KW**	Capacity MBtuh		Total System KW**	Capacity MBtuh		Total System KW**	Capacity MBtuh		Total System KW**	Capacity MBtuh		Total System KW**	Capacity MBtuh		Total System KW**
		Total	Sens‡		Total	Sens‡		Total	Sens‡		Total	Sens‡		Total	Sens‡		Total	Sens‡	
24ABB336(A,W)31 Outdoor Section With CAP*3617A Indoor Section																			
1050	72 (22.2)	40.22	21.00	2.54	38.50	20.34	2.79	36.66	19.65	3.07	34.69	18.93	3.39	32.56	18.15	3.76	30.22	17.30	4.20
	67 (19.4)	36.61	25.73	2.51	35.00	25.05	2.76	33.29	24.35	3.04	31.46	23.60	3.36	29.49	22.81	3.74	27.34	21.95	4.18
	63 (17.2)††	34.02	24.88	2.49	32.50	24.20	2.74	30.89	23.49	3.02	29.17	22.73	3.35	27.32	21.94	3.73	25.29	21.07	4.18
	62 (16.7)	33.42	30.44	2.49	31.97	29.75	2.74	30.45	29.01	3.02	28.86	28.20	3.35	27.29	27.29	3.73	25.64	25.64	4.18
	57 (13.9)	32.55	32.55	2.48	31.38	31.38	2.73	30.12	30.12	3.02	28.77	28.77	3.35	27.29	27.29	3.73	25.65	25.65	4.18
1200	72 (22.2)	40.90	21.97	2.60	39.11	21.31	2.85	37.20	20.61	3.13	35.17	19.88	3.45	32.96	19.09	3.82	30.54	18.23	4.25
	67 (19.4)	37.25	27.30	2.57	35.57	26.61	2.82	33.80	25.90	3.10	31.91	25.15	3.42	29.88	24.35	3.80	27.67	23.48	4.24
	63 (17.2)††	34.63	26.36	2.55	33.04	25.66	2.80	31.38	24.94	3.08	29.60	24.18	3.41	27.69	23.37	3.79	25.61	22.48	4.24
	62 (16.7)	34.19	32.60	2.55	32.73	31.85	2.80	31.24	31.24	3.08	29.83	29.83	3.41	28.26	28.26	3.79	26.52	26.52	4.24
	57 (13.9)	33.87	33.87	2.55	32.61	32.61	2.80	31.27	31.27	3.08	29.83	29.83	3.41	28.26	28.26	3.79	26.52	26.52	4.24
1350	72 (22.2)	41.40	22.89	2.66	39.55	22.22	2.91	37.60	21.52	3.19	35.50	20.77	3.51	33.24	19.97	3.88	30.75	19.10	4.31
	67 (19.4)	37.72	28.79	2.63	36.00	28.11	2.88	34.19	27.39	3.16	32.26	26.63	3.48	30.19	25.81	3.86	27.93	24.92	4.30
	63 (17.2)††	35.09	27.77	2.61	33.47	27.07	2.86	31.76	26.34	3.14	29.94	25.57	3.47	27.99	24.73	3.85	25.88	23.82	4.29
	62 (16.7)	34.90	34.90	2.61	33.63	33.63	2.86	32.22	32.22	3.15	30.70	30.70	3.47	29.05	29.05	3.85	27.22	27.22	4.30
	57 (13.9)	34.96	34.96	2.61	33.64	33.64	2.86	32.23	32.23	3.15	30.70	30.70	3.47	29.05	29.05	3.85	27.22	27.22	4.29

COOLING INDOOR MODEL	CAPACITY	POWER	FURNACE MODEL
*CAP**3617A**	1.00	1.00	
CAP**3614A**	0.97	0.97	
CAP**3621A**	1.00	1.00	
CAP**4221A**	1.01	1.01	
CAP**4224A**	1.00	1.00	
CNPF*3618A**	1.00	1.00	
CNPH*3617A**	1.00	1.00	
CNPH*4221A**	1.01	1.01	
CNPV*3617A**	1.00	1.00	
CNPV*3621A**	1.00	1.00	
CNPV*4217A**	1.00	0.99	
CNPV*4221A**	1.01	1.01	
CSPH*3612A**	1.00	0.99	
CSPH*4212A**	1.01	1.00	
FE4AN(B,F)003	0.99	0.90	
FE4AN(B,F)005	1.03	0.94	
FE4ANB006	1.04	0.95	
FE4ANF002	0.99	0.94	
FE5ANB004	1.04	0.94	
FF1ENP036	0.99	0.99	
FV4BN(B,F)003	0.99	0.90	
FV4BN(B,F)005	1.03	0.94	
FV4BNB006	1.04	0.95	
FV4BNF002	0.99	0.94	
FX4CN(B,F)036	1.01	0.94	
FX4CN(B,F)042	1.03	0.96	
FY4ANF036	0.98	0.98	
FY4ANF042	1.01	1.00	
CAP**3614A**	0.96	0.91	58CV(A,X)070–12
CNPH*3617A**	0.98	0.93	58CV(A,X)070–12
CNPH*4221A**	0.99	0.94	58CV(A,X)070–12
CSPH*3612A**	0.99	0.93	58CV(A,X)070–12
CSPH*4212A**	0.99	0.93	58CV(A,X)070–12
CAP**3617A**	0.99	0.92	58CV(A,X)090–16
CNPH*3617A**	0.98	0.93	58CV(A,X)090–16
CNPH*4221A**	0.99	0.93	58CV(A,X)090–16
CNPH*4821A**	1.01	0.90	58CV(A,X)090–16
CNPV*3617A**	0.98	0.93	58CV(A,X)090–16
CNPV*4217A**	1.00	0.93	58CV(A,X)090–16

COOLING INDOOR MODEL	CAPACITY	POWER	FURNACE MODEL
CSPH*3612A**	0.99	0.90	58CV(A,X)090–16
CSPH*4212A**	0.99	0.90	58CV(A,X)090–16
CAP**3621A**	0.99	0.92	58CV(A,X)110–20
CAP**4221A**	0.99	0.90	58CV(A,X)110–20
CNPH*3617A**	0.99	0.94	58CV(A,X)110–20
CNPH*4221A**	1.00	0.93	58CV(A,X)110–20
CNPV*3621A**	0.99	0.94	58CV(A,X)110–20
CNPV*4221A**	1.00	0.93	58CV(A,X)110–20
CSPH*3612A**	0.99	0.90	58CV(A,X)110–20
CSPH*4212A**	1.00	0.91	58CV(A,X)110–20
CAP**4224A**	0.99	0.90	58CV(A,X)135–22
CNPH*3617A**	0.99	0.92	58CV(A,X)135–22
CNPH*4221A**	0.99	0.90	58CV(A,X)135–22
CSPH*3612A**	0.99	0.90	58CV(A,X)135–22
CSPH*4212A**	0.99	0.90	58CV(A,X)135–22
CAP**4224A**	1.00	0.91	58CV(A,X)155–22
CNPH*3617A**	0.99	0.92	58CV(A,X)155–22
CNPH*4221A**	1.00	0.91	58CV(A,X)155–22
CSPH*3612A**	0.99	0.90	58CV(A,X)155–22
CSPH*4212A**	1.00	0.91	58CV(A,X)155–22
CAP**3617A**	0.99	0.93	58MEB040–12
CNPH*3617A**	0.99	0.92	58MEB040–12
CNPH*4221A**	1.00	0.93	58MEB040–12
CNPV*3617A**	0.99	0.92	58MEB040–12
CNPV*4217A**	1.00	0.93	58MEB040–12
CSPH*3612A**	1.00	0.93	58MEB040–12
CSPH*4212A**	1.00	0.93	58MEB040–12
CAP**3617A**	0.99	0.93	58MEB060–12
CNPH*3617A**	0.99	0.92	58MEB060–12
CNPH*4221A**	1.00	0.93	58MEB060–12
CNPH*4821A**	1.02	0.93	58MEB060–12
CNPV*3617A**	0.99	0.92	58MEB060–12
CNPV*4217A**	1.00	0.93	58MEB060–12
CSPH*3612A**	1.00	0.93	58MEB060–12
CSPH*4212A**	1.00	0.93	58MEB060–12
CAP**3617A**	0.99	0.93	58MEB080–12
CNPH*3617A**	0.99	0.92	58MEB080–12
CNPH*4221A**	1.00	0.93	58MEB080–12
CNPH*4821A**	1.02	0.91	58MEB080–12

COOLING INDOOR MODEL	CAPACITY	POWER	FURNACE MODEL
CNPV*3617A**	0.99	0.92	58MEB080–12
CNPV*4217A**	1.00	0.93	58MEB080–12
CSPH*3612A**	1.00	0.93	58MEB080–12
CSPH*4212A**	1.00	0.93	58MEB080–12
CAP**3617A**	0.99	0.93	58MEB080–16
CNPH*3617A**	0.99	0.92	58MEB080–16
CNPH*4221A**	1.00	0.93	58MEB080–16
CNPV*3617A**	0.99	0.92	58MEB080–16
CNPV*4217A**	1.00	0.93	58MEB080–16
CSPH*3612A**	1.00	0.93	58MEB080–16
CSPH*4212A**	1.00	0.93	58MEB080–16
CAP**3621A**	0.99	0.90	58MEB100–20
CAP**4221A**	1.00	0.91	58MEB100–20
CNPH*3617A**	0.98	0.92	58MEB100–20
CNPH*4221A**	1.00	0.93	58MEB100–20
CNPH*4821A**	1.02	0.91	58MEB100–20
CNPV*3621A**	0.99	0.92	58MEB100–20
CNPV*4221A**	1.00	0.93	58MEB100–20
CNPV*4821A**	1.02	0.91	58MEB100–20
CSPH*3612A**	1.00	0.93	58MEB100–20
CSPH*4212A**	1.00	0.93	58MEB100–20
CAP**3617A**	0.99	0.94	58MV(B,C)060–14
CNPH*3617A**	0.99	0.94	58MV(B,C)060–14
CNPH*4221A**	1.00	0.93	58MV(B,C)060–14
CNPV*3617A**	0.99	0.94	58MV(B,C)060–14
CNPV*4217A**	1.00	0.93	58MV(B,C)060–14
CSPH*3612A**	0.99	0.90	58MV(B,C)060–14
CSPH*4212A**	1.00	0.91	58MV(B,C)060–14
CAP**3621A**	0.99	0.94	58MV(B,C)080–14
CAP**4221A**	0.99	0.94	58MV(B,C)080–14
CNPH*3617A**	0.98	0.93	58MV(B,C)080–14
CNPH*4221A**	0.99	0.94	58MV(B,C)080–14
CNPV*3621A**	0.98	0.93	58MV(B,C)080–14
CNPV*4221A**	0.99	0.94	58MV(B,C)080–14
CSPH*3612A**	0.99	0.92	58MV(B,C)080–14
CSPH*4212A**	0.99	0.93	58MV(B,C)080–14
CAP**3621A**	0.99	0.92	58MV(B,C)080–20
CAP**4221A**	0.99	0.93	58MV(B,C)080–20
CNPH*3617A**	0.98	0.93	58MV(B,C)080–20

DETAILED COOLING CAPACITIES# CONTINUED

24ABB336(A,W)31 Outdoor Section With CAP*3617A Indoor Section

COOLING INDOOR MODEL	CAPACITY	POWER	FURNACE MODEL
CNPH*4221A**	0.99	0.93	58MV(B,C)080–20
CNPV*3621A**	0.98	0.93	58MV(B,C)080–20
CNPV*4221A**	0.99	0.93	58MV(B,C)080–20
CSPH*3612A**	0.99	0.93	58MV(B,C)080–20
CSPH*4212A**	0.99	0.90	58MV(B,C)080–20
CAP**3621A**	0.99	0.93	58MV(B,C)100–20
CAP**4221A**	1.00	0.93	58MV(B,C)100–20
CNPH*3617A**	0.99	0.94	58MV(B,C)100–20
CNPH*4221A**	1.00	0.93	58MV(B,C)100–20
CNPV*3621A**	0.99	0.94	58MV(B,C)100–20
CNPV*4221A**	1.00	0.93	58MV(B,C)100–20
CSPH*3612A**	0.99	0.90	58MV(B,C)100–20
CSPH*4212A**	1.00	0.91	58MV(B,C)100–20
CAP**4224A**	0.99	0.90	58MV(B,C)120–20
CNPH*3617A**	0.99	0.94	58MV(B,C)120–20
CNPH*4221A**	0.99	0.93	58MV(B,C)120–20
CSPH*3612A**	0.99	0.90	58MV(B,C)120–20
CSPH*4212A**	0.99	0.90	58MV(B,C)120–20
CAP**4224A**	0.99	0.92	58MVB040–14
CNPH*3617A**	0.98	0.93	58MVB040–14
CNPH*4221A**	0.99	0.94	58MVB040–14
CSPH*3612A**	0.99	0.94	58MVB040–14
CSPH*4212A**	0.99	0.93	58MVB040–14
CAP**3617A**	0.99	0.96	58PH*070–16
CAP**4817A**	1.02	0.95	58PH*070–16
CNPH*3617A**	0.98	0.97	58PH*070–16
CNPH*4221A**	0.99	0.97	58PH*070–16
CNPV*3617A**	0.98	0.96	58PH*070–16
CNPV*4217A**	1.00	0.93	58PH*070–16
CSPH*3612A**	1.01	0.95	58PH*070–16
CSPH*4212A**	1.02	0.95	58PH*070–16
CAP**3621A**	1.00	0.91	58PH*090–16
CAP**4221A**	1.01	0.91	58PH*090–16
CNPH*3617A**	0.99	0.92	58PH*090–16
CNPH*4221A**	1.01	0.91	58PH*090–16
CNPV*3621A**	0.99	0.92	58PH*090–16
CNPV*4221A**	1.01	0.91	58PH*090–16
CNPV*4821A**	1.02	0.91	58PH*090–16
CSPH*3612A**	1.02	0.92	58PH*090–16
CSPH*4212A**	1.02	0.93	58PH*090–16
CAP**3621A**	1.01	0.91	58PH*110–20
CAP**4221A**	1.01	0.92	58PH*110–20
CNPH*3617A**	0.99	0.93	58PH*110–20
CNPH*4221A**	1.01	0.91	58PH*110–20
CNPV*3621A**	0.99	0.93	58PH*110–20
CNPV*4221A**	1.01	0.91	58PH*110–20
CNPV*4821A**	1.03	0.92	58PH*110–20
CSPH*3612A**	1.02	0.92	58PH*110–20
CSPH*4212A**	1.03	0.94	58PH*110–20

See notes on page 31

DETAILED COOLING CAPACITIES# CONTINUED

EVAPORATOR AIR		CONDENSER ENTERING AIR TEMPERATURES °F (°C)																	
		75 (23.9)			85 (29.4)			95 (35)			105 (40.6)			115 (46.1)			125 (51.7)		
CFM	EWB °F (°C)	Capacity MBtuh		Total System KW**	Capacity MBtuh		Total System KW**	Capacity MBtuh		Total System KW**	Capacity MBtuh		Total System KW**	Capacity MBtuh		Total System KW**	Capacity MBtuh		Total System KW**
		Total	Sens‡		Total	Sens‡		Total	Sens‡		Total	Sens‡		Total	Sens‡		Total	Sens‡	
24ABB342(A,W)30 Outdoor Section With 42 Indoor Section																			
1225	72 (22.2)	48.49	25.49	3.39	46.39	24.69	3.73	44.18	23.85	4.11	41.83	22.97	4.52	39.28	22.03	4.98	36.45	21.00	5.47
	67 (19.4)	44.47	31.36	3.33	42.52	30.54	3.67	40.46	29.67	4.05	38.28	28.77	4.47	35.93	27.82	4.92	33.34	26.78	5.42
	63 (17.2)††	41.53	30.43	3.29	39.69	29.59	3.63	37.74	28.72	4.01	35.68	27.80	4.43	33.47	26.84	4.88	31.05	25.79	5.38
	62 (16.7)	40.83	37.19	3.28	39.07	36.35	3.63	37.22	35.45	4.00	35.29	34.48	4.42	33.32	33.32	4.88	31.36	31.36	5.38
	57 (13.9)	39.73	39.73	3.27	38.29	38.29	3.62	36.76	36.76	4.00	35.12	35.12	4.42	33.34	33.34	4.88	31.36	31.36	5.38
1400	72 (22.2)	49.21	26.62	3.47	47.02	25.80	3.81	44.73	24.95	4.19	42.30	24.06	4.61	39.67	23.11	5.06	36.75	22.07	5.55
	67 (19.4)	45.16	33.20	3.42	43.14	32.37	3.76	41.00	31.49	4.13	38.75	30.59	4.55	36.34	29.63	5.01	33.67	28.57	5.50
	63 (17.2)††	42.22	32.16	3.38	40.31	31.31	3.72	38.28	30.42	4.09	36.17	29.51	4.51	33.89	28.53	4.97	31.40	27.47	5.46
	62 (16.7)	41.69	39.75	3.37	39.91	38.85	3.71	38.02	38.02	4.09	36.34	36.34	4.51	34.45	34.45	4.98	32.33	32.33	5.48
	57 (13.9)	41.25	41.25	3.37	39.72	39.72	3.71	38.08	38.08	4.09	36.34	36.34	4.51	34.45	34.45	4.98	32.33	32.33	5.48
1575	72 (22.2)	49.75	27.70	3.56	47.50	26.88	3.90	45.14	26.02	4.27	42.64	25.12	4.69	39.94	24.16	5.14	36.95	23.10	5.63
	67 (19.4)	45.69	34.99	3.50	43.61	34.15	3.84	41.42	33.28	4.22	39.12	32.36	4.63	36.65	31.38	5.09	33.93	30.29	5.58
	63 (17.2)††	42.75	33.85	3.46	40.79	33.00	3.80	38.72	32.11	4.17	36.55	31.18	4.59	34.23	30.18	5.05	31.68	29.07	5.54
	62 (16.7)	42.52	42.08	3.46	40.87	40.87	3.80	39.14	39.14	4.18	37.31	37.31	4.61	35.32	35.32	5.07	33.09	33.09	5.56
	57 (13.9)	42.49	42.49	3.46	40.87	40.87	3.80	39.15	39.15	4.18	37.32	37.32	4.61	35.32	35.32	5.07	33.09	33.09	5.56

COOLING INDOOR MODEL	CAPACITY	POWER	FURNACE MODEL
*CAP**4221A**	1.00	1.00	
CAP**4224A**	1.00	1.00	
CAP**4817A**	0.99	0.99	
CAP**4821A**	1.01	1.01	
CAP**4824A**	1.01	1.01	
CNPF*4818A**	1.01	1.01	
CNPH*4221A**	1.00	1.00	
CNPH*4821A**	1.01	1.01	
CNPV*4217A**	1.00	1.00	
CNPV*4221A**	1.00	1.00	
CNPV*4821A**	1.01	1.01	
CNPV*4824A**	1.01	1.01	
CSPH*4212A**	1.00	1.00	
CSPH*4812A**	1.01	1.01	
FV4BN(B,F)003	0.99	0.94	
FV4BN(B,F)005	1.01	0.95	
FV4BNB006	1.04	0.95	
FX4CN(B,F)042	1.01	0.99	
FX4CN(B,F)048	1.04	0.99	
FY4ANF042	1.00	1.00	
FY4ANF048	1.02	1.02	
CNPH*4221A**	0.99	0.97	58CV(A,X)070–12
CNPH*4821A**	1.00	0.98	58CV(A,X)070–12
CSPH*4212A**	0.99	0.97	58CV(A,X)070–12
CSPH*4812A**	1.00	0.98	58CV(A,X)070–12
CAP**4817A**	0.98	0.93	58CV(A,X)090–16
CNPV*4217A**	0.99	0.93	58CV(A,X)090–16
CAP**4221A**	0.99	0.97	58CV(A,X)110–20
CAP**4821A**	1.00	0.96	58CV(A,X)110–20
CNPV*4221A**	0.99	0.94	58CV(A,X)110–20
CNPV*4821A**	1.00	0.96	58CV(A,X)110–20
CAP**4224A**	0.99	0.94	58CV(A,X)135–22
CAP**4824A**	1.00	0.94	58CV(A,X)135–22
CNPV*4824A**	1.00	0.94	58CV(A,X)135–22
CAP**4817A**	1.00	0.94	58MEB040–12
CNPH*4221A**	0.99	0.93	58MEB040–12
CNPH*4821A**	1.00	0.94	58MEB040–12
CNPV*4217A**	1.00	0.94	58MEB040–12
CSPH*4212A**	1.00	0.94	58MEB040–12

COOLING INDOOR MODEL	CAPACITY	POWER	FURNACE MODEL
CSPH*4812A**	1.00	0.94	58MEB040–12
CAP**4817A**	1.00	0.94	58MEB060–12
CNPH*4221A**	0.99	0.94	58MEB060–12
CNPH*4821A**	1.00	0.94	58MEB060–12
CNPV*4217A**	1.00	0.94	58MEB060–12
CSPH*4212A**	1.00	0.94	58MEB060–12
CSPH*4812A**	1.00	0.94	58MEB060–12
CAP**4817A**	1.00	0.94	58MEB080–12
CNPH*4221A**	0.99	0.93	58MEB080–12
CNPH*4821A**	1.00	0.94	58MEB080–12
CNPV*4217A**	1.00	0.94	58MEB080–12
CSPH*4212A**	1.00	0.94	58MEB080–12
CSPH*4812A**	1.00	0.94	58MEB080–12
CAP**4817A**	1.00	0.94	58MEB080–16
CNPH*4221A**	0.98	0.92	58MEB080–16
CNPH*4821A**	1.00	0.94	58MEB080–16
CNPV*4217A**	0.99	0.93	58MEB080–16
CSPH*4212A**	1.00	0.94	58MEB080–16
CSPH*4812A**	1.00	0.94	58MEB080–16
CAP**4221A**	0.99	0.93	58MEB100–20
CAP**4821A**	1.00	0.92	58MEB100–20
CNPH*4221A**	0.99	0.93	58MEB100–20
CNPH*4821A**	1.00	0.92	58MEB100–20
CNPV*4221A**	0.99	0.93	58MEB100–20
CNPV*4821A**	1.00	0.92	58MEB100–20
CSPH*4212A**	1.00	0.92	58MEB100–20
CSPH*4812A**	1.00	0.92	58MEB100–20
CAP**4224A**	0.99	0.91	58MEB120–20
CNPH*4221A**	0.99	0.93	58MEB120–20
CNPH*4821A**	1.00	0.92	58MEB120–20
CNPV*4824A**	1.00	0.92	58MEB120–20
CSPH*4212A**	1.00	0.92	58MEB120–20
CSPH*4812A**	1.00	0.92	58MEB120–20
CAP**4224A**	0.98	0.96	58MV(B,C)040–14
CAP**4824A**	1.00	0.98	58MV(B,C)040–14
CNPH*4221A**	0.98	0.96	58MV(B,C)040–14
CNPH*4821A**	0.99	0.97	58MV(B,C)040–14
CNPV*4824A**	1.00	0.98	58MV(B,C)040–14
CSPH*4212A**	0.98	0.96	58MV(B,C)040–14

COOLING INDOOR MODEL	CAPACITY	POWER	FURNACE MODEL
CSPH*4812A**	1.00	0.98	58MV(B,C)040–14
CAP**4817A**	0.98	0.93	58MV(B,C)060–14
CNPV*4217A**	0.99	0.94	58MV(B,C)060–14
CAP**4221A**	0.98	0.96	58MV(B,C)080–14
CAP**4821A**	0.99	0.97	58MV(B,C)080–14
CNPV*4221A**	0.98	0.96	58MV(B,C)080–14
CNPV*4821A**	0.99	0.97	58MV(B,C)080–14
CAP**4817A**	0.96	0.95	58PH*070–16
CNPH*4221A**	0.98	0.96	58PH*070–16
CNPH*4821A**	1.00	0.98	58PH*070–16
CNPV*4217A**	0.99	0.97	58PH*070–16
CSPH*4212A**	0.99	0.94	58PH*070–16
CSPH*4812A**	1.00	0.98	58PH*070–16
CAP**4221A**	0.99	0.93	58PH*090–16
CAP**4821A**	1.00	0.92	58PH*090–16
CNPH*4221A**	0.99	0.93	58PH*090–16
CNPH*4821A**	1.00	0.92	58PH*090–16
CNPV*4221A**	0.99	0.93	58PH*090–16
CNPV*4821A**	1.00	0.92	58PH*090–16
CSPH*4212A**	0.99	0.93	58PH*090–16
CSPH*4812A**	1.00	0.92	58PH*090–16
CAP**4221A**	0.99	0.91	58PH*110–20
CAP**4821A**	1.00	0.92	58PH*110–20
CNPH*4221A**	0.99	0.91	58PH*110–20
CNPH*4821A**	1.00	0.92	58PH*110–20
CNPV*4221A**	0.99	0.91	58PH*110–20
CNPV*4821A**	1.00	0.92	58PH*110–20
CSPH*4212A**	0.99	0.91	58PH*110–20
CSPH*4812A**	1.00	0.92	58PH*110–20
CAP**4224A**	0.99	0.91	58PH*135–20
CAP**4824A**	1.00	0.92	58PH*135–20
CNPH*4221A**	0.99	0.93	58PH*135–20
CNPH*4821A**	1.00	0.92	58PH*135–20
CNPV*4824A**	1.00	0.92	58PH*135–20
CSPH*4212A**	0.99	0.91	58PH*135–20
CSPH*4812A**	1.00	0.92	58PH*135–20

See notes on page 31

DETAILED COOLING CAPACITIES# CONTINUED

EVAPORATOR AIR		CONDENSER ENTERING AIR TEMPERATURES °F (°C)																	
		75 (23.9)			85 (29.4)			95 (35)			105 (40.6)			115 (46.1)			125 (51.7)		
CFM	EWB °F (°C)	Capacity MBtuh		Total System KW**	Capacity MBtuh		Total System KW**	Capacity MBtuh		Total System KW**	Capacity MBtuh		Total System KW**	Capacity MBtuh		Total System KW**	Capacity MBtuh		Total System KW**
		Total	Sens‡		Total	Sens‡		Total	Sens‡		Total	Sens‡		Total	Sens‡		Total	Sens‡	
24ABB348(A,W)31 Outdoor Section With CAP**4821A** Indoor Section																			
1400	72 (22.2)	54.48	26.42	3.32	52.18	25.62	3.67	49.73	24.77	4.05	47.13	23.89	4.48	44.34	22.96	4.94	41.30	21.95	5.45
	67 (19.4)	49.80	32.57	3.30	47.63	31.74	3.64	45.34	30.88	4.03	42.93	29.97	4.45	40.34	29.02	4.92	37.58	28.02	5.43
	63 (17.2)††	46.41	31.55	3.28	44.36	30.70	3.63	42.19	29.82	4.01	39.89	28.90	4.44	37.46	27.94	4.91	34.91	26.94	5.42
	62 (16.7)	45.58	38.68	3.28	43.61	37.81	3.62	41.55	36.89	4.01	39.45	39.21	4.43	37.47	37.47	4.91	35.38	35.38	5.42
	57 (13.9)	44.55	44.55	3.27	42.94	42.94	3.62	41.23	41.23	4.01	39.42	39.42	4.43	37.47	37.47	4.91	35.39	35.39	5.42
1600	72 (22.2)	55.34	27.67	3.40	52.95	26.86	3.75	50.42	26.01	4.13	47.73	25.12	4.56	44.84	24.17	5.02	41.69	23.15	5.52
	67 (19.4)	50.62	34.60	3.38	48.38	33.76	3.72	46.00	32.88	4.11	43.51	31.98	4.53	40.84	31.01	5.00	38.00	29.98	5.51
	63 (17.2)††	47.22	33.46	3.36	45.08	32.60	3.71	42.83	31.71	4.09	40.47	30.78	4.52	37.96	29.80	4.99	35.33	28.77	5.49
	62 (16.7)	46.58	41.42	3.36	44.61	44.23	3.70	42.74	42.74	4.09	40.82	40.82	4.52	38.75	38.75	4.99	36.51	36.51	5.50
	57 (13.9)	46.27	46.27	3.36	44.56	44.56	3.70	42.75	42.75	4.09	40.82	40.82	4.52	38.75	38.75	4.99	36.52	36.52	5.50
1800	72 (22.2)	55.96	28.85	3.48	53.51	28.03	3.83	50.90	27.17	4.21	48.15	26.28	4.64	45.18	25.32	5.10	41.94	24.28	5.60
	67 (19.4)	51.21	36.53	3.46	48.91	35.69	3.80	46.48	34.81	4.19	43.93	33.88	4.61	41.20	32.89	5.08	38.30	31.83	5.58
	63 (17.2)††	47.80	35.26	3.44	45.61	34.40	3.79	43.31	33.50	4.17	40.89	32.56	4.60	38.33	31.55	5.06	35.64	30.47	5.57
	62 (16.7)	47.66	47.66	3.44	45.87	45.87	3.79	43.97	43.97	4.17	41.94	41.94	4.60	39.77	39.77	5.07	37.41	37.41	5.58
	57 (13.9)	47.67	47.67	3.44	45.88	45.88	3.79	43.97	43.97	4.17	41.95	41.95	4.60	39.77	39.77	5.07	37.41	37.41	5.58

COOLING INDOOR MODEL	CAPACITY	POWER	FURNACE MODEL
*CAP**4821A**	1.00	1.00	
CAP**4817A**	0.98	0.98	
CAP**4824A**	0.99	0.99	
CAP**6021A**	1.00	0.98	
CAP**6024A**	1.01	0.99	
CNPF*4818A**	0.98	0.98	
CNPH*4821A**	0.99	0.99	
CNPH*6024A**	1.01	0.99	
CNPV*4821A**	0.99	0.99	
CNPV*4824A**	0.99	0.99	
CNPV*6024A**	1.01	0.99	
CSPH*4812A**	1.00	1.00	
CSPH*6012A**	1.01	0.99	
FE4AN(B,F)005	1.00	0.92	
FE4ANB006	1.01	0.91	
FV4BN(B,F)005	1.00	0.92	
FV4BNB006	1.01	0.91	
FX4CN(B,F)048	1.00	0.92	
FX4CN(B,F)060	1.03	0.95	
FY4ANB060	1.01	0.99	
FY4ANF048	0.99	0.97	
CAP**4817A**	0.98	0.94	58CV(A,X)090–16
CNPH*4821A**	0.98	0.92	58CV(A,X)090–16
CNPH*6024A**	1.00	0.94	58CV(A,X)090–16
CSPH*4812A**	0.99	0.93	58CV(A,X)090–16
CSPH*6012A**	1.00	0.92	58CV(A,X)090–16
CAP**4821A**	0.98	0.92	58CV(A,X)110–20
CAP**6021A**	1.00	0.92	58CV(A,X)110–20
CNPH*4821A**	0.98	0.92	58CV(A,X)110–20
CNPH*6024A**	1.00	0.92	58CV(A,X)110–20
CNPV*4821A**	0.98	0.92	58CV(A,X)110–20
CSPH*4812A**	0.98	0.92	58CV(A,X)110–20
CSPH*6012A**	1.00	0.92	58CV(A,X)110–20
CAP**4824A**	0.98	0.92	58CV(A,X)135–22
CAP**6024A**	1.00	0.92	58CV(A,X)135–22
CNPH*4821A**	0.98	0.92	58CV(A,X)135–22
CNPH*6024A**	1.00	0.92	58CV(A,X)135–22
CNPV*4824A**	0.98	0.92	58CV(A,X)135–22
CNPV*6024A**	1.00	0.92	58CV(A,X)135–22

COOLING INDOOR MODEL	CAPACITY	POWER	FURNACE MODEL
CSPH*4812A**	0.98	0.92	58CV(A,X)135–22
CSPH*6012A**	1.00	0.92	58CV(A,X)135–22
CAP**4824A**	0.98	0.90	58CV(A,X)155–22
CAP**6024A**	1.00	0.90	58CV(A,X)155–22
CNPH*4821A**	0.99	0.91	58CV(A,X)155–22
CNPH*6024A**	1.00	0.90	58CV(A,X)155–22
CNPV*4824A**	0.98	0.90	58CV(A,X)155–22
CNPV*6024A**	1.00	0.90	58CV(A,X)155–22
CSPH*4812A**	0.98	0.90	58CV(A,X)155–22
CSPH*6012A**	1.00	0.90	58CV(A,X)155–22
CAP**4817A**	0.98	0.98	58MEB080–16
CNPH*4821A**	0.98	0.94	58MEB080–16
CNPH*6024A**	0.98	0.94	58MEB080–16
CSPH*4812A**	0.98	0.94	58MEB080–16
CSPH*6012A**	0.98	0.92	58MEB080–16
CAP**4821A**	0.98	0.92	58MEB100–20
CAP**6021A**	0.98	0.90	58MEB100–20
CNPH*4821A**	0.98	0.92	58MEB100–20
CNPH*6024A**	0.98	0.90	58MEB100–20
CNPV*4821A**	0.98	0.92	58MEB100–20
CSPH*4812A**	0.98	0.92	58MEB100–20
CSPH*6012A**	0.98	0.90	58MEB100–20
CAP**4824A**	0.98	0.92	58MEB120–20
CAP**6024A**	0.98	0.90	58MEB120–20
CNPH*4821A**	0.98	0.92	58MEB120–20
CNPH*6024A**	0.98	0.90	58MEB120–20
CNPV*4824A**	0.98	0.92	58MEB120–20
CNPV*6024A**	0.98	0.90	58MEB120–20
CSPH*4812A**	0.98	0.92	58MEB120–20
CSPH*6012A**	0.98	0.90	58MEB120–20
CAP**4821A**	0.97	0.93	58MV(B,C)080–20
CAP**6021A**	0.98	0.92	58MV(B,C)080–20
CNPH*4821A**	0.97	0.93	58MV(B,C)080–20
CNPH*6024A**	0.99	0.93	58MV(B,C)080–20
CNPV*4821A**	0.97	0.93	58MV(B,C)080–20
CSPH*4812A**	0.97	0.93	58MV(B,C)080–20
CSPH*6012A**	0.99	0.93	58MV(B,C)080–20
CAP**4821A**	0.98	0.96	58MV(B,C)100–20
CAP**6021A**	1.00	0.94	58MV(B,C)100–20

COOLING INDOOR MODEL	CAPACITY	POWER	FURNACE MODEL
CNPH*4821A**	0.98	0.96	58MV(B,C)100–20
CNPH*6024A**	1.00	0.94	58MV(B,C)100–20
CNPV*4821A**	0.98	0.96	58MV(B,C)100–20
CSPH*4812A**	0.98	0.96	58MV(B,C)100–20
CSPH*6012A**	1.00	0.94	58MV(B,C)100–20
CAP**4824A**	0.98	0.94	58MV(B,C)120–20
CAP**6024A**	1.00	0.94	58MV(B,C)120–20
CNPH*4821A**	0.98	0.92	58MV(B,C)120–20
CNPH*6024A**	1.00	0.94	58MV(B,C)120–20
CNPV*4824A**	0.98	0.94	58MV(B,C)120–20
CNPV*6024A**	1.00	0.94	58MV(B,C)120–20
CSPH*4812A**	0.98	0.94	58MV(B,C)120–20
CSPH*6012A**	1.00	0.94	58MV(B,C)120–20
CAP**4821A**	0.98	0.92	58PH*090–16
CAP**6021A**	1.00	0.92	58PH*090–16
CNPH*4821A**	0.98	0.92	58PH*090–16
CNPH*6024A**	1.00	0.94	58PH*090–16
CNPV*4821A**	0.98	0.92	58PH*090–16
CSPH*4812A**	0.98	0.92	58PH*090–16
CSPH*6012A**	1.00	0.92	58PH*090–16
CAP**4821A**	0.98	0.92	58PH*110–20
CAP**6021A**	1.00	0.92	58PH*110–20
CNPH*4821A**	0.98	0.92	58PH*110–20
CNPH*6024A**	1.00	0.92	58PH*110–20
CNPV*4821A**	0.98	0.92	58PH*110–20
CSPH*4812A**	0.98	0.92	58PH*110–20
CSPH*6012A**	1.00	0.92	58PH*110–20
CAP**4824A**	0.99	0.93	58PH*135–20
CAP**6024A**	1.00	0.92	58PH*135–20
CNPH*4821A**	0.99	0.93	58PH*135–20
CNPH*6024A**	1.00	0.92	58PH*135–20
CNPV*4824A**	0.99	0.93	58PH*135–20
CNPV*6024A**	1.00	0.92	58PH*135–20
CSPH*4812A**	0.99	0.93	58PH*135–20
CSPH*6012A**	1.00	0.92	58PH*135–20

See notes on page 31

DETAILED COOLING CAPACITIES# CONTINUED

EVAPORATOR AIR		CONDENSER ENTERING AIR TEMPERATURES °F (°C)																	
		75 (23.9)			85 (29.4)			95 (35)			105 (40.6)			115 (46.1)			125 (51.7)		
CFM	EWB °F (°C)	Capacity MBtuh		Total System KW**	Capacity MBtuh		Total System KW**	Capacity MBtuh		Total System KW**	Capacity MBtuh		Total System KW**	Capacity MBtuh		Total System KW**	Capacity MBtuh		Total System KW**
		Total	Sens‡		Total	Sens‡		Total	Sens‡		Total	Sens‡		Total	Sens‡		Total	Sens‡	
24ABB360(A,W)31 Outdoor Section With CAP**6024A** Indoor Section																			
1750	72 (22.2)	68.71	34.82	4.37	65.76	33.74	4.81	62.59	32.60	5.30	59.21	31.39	5.84	55.54	30.09	6.42	51.41	28.66	7.05
	67 (19.4)	63.16	43.00	4.29	60.43	41.90	4.74	57.50	40.73	5.23	54.39	39.50	5.77	51.03	38.20	6.36	47.32	36.77	6.99
	63 (17.2)††	59.15	41.80	4.24	56.59	40.69	4.68	53.84	39.50	5.18	50.92	38.26	5.72	47.79	36.96	6.31	44.36	35.54	6.95
	62 (16.7)	58.14	51.13	4.23	55.65	49.99	4.67	53.01	48.77	5.16	50.27	47.45	5.71	47.55	47.55	6.31	44.70	44.70	6.96
	57 (13.9)	56.63	56.63	4.21	54.60	54.60	4.66	52.42	52.42	5.16	50.09	50.09	5.71	47.55	47.55	6.31	44.71	44.71	6.96
2000	72 (22.2)	69.71	36.45	4.48	66.67	35.37	4.92	63.38	34.20	5.41	59.88	32.98	5.95	56.07	31.67	6.53	51.80	30.21	7.15
	67 (19.4)	64.15	45.67	4.40	61.31	44.55	4.85	58.27	43.36	5.34	55.05	42.13	5.87	51.58	40.80	6.46	47.74	39.34	7.10
	63 (17.2)††	60.14	44.30	4.35	57.47	43.18	4.79	54.61	41.98	5.28	51.60	40.73	5.82	48.36	39.39	6.42	44.82	37.93	7.06
	62 (16.7)	59.33	54.75	4.34	56.80	53.54	4.78	54.23	54.23	5.28	51.77	51.77	5.83	49.05	49.05	6.42	45.99	45.99	7.07
	57 (13.9)	58.75	58.75	4.33	56.59	56.59	4.78	54.26	54.26	5.28	51.77	51.77	5.83	49.05	49.05	6.42	46.00	46.00	7.07
2250	72 (22.2)	70.44	37.99	4.59	67.31	36.90	5.03	63.93	35.73	5.52	60.33	34.49	6.05	56.41	33.16	6.63	52.03	31.69	7.25
	67 (19.4)	64.85	48.20	4.51	61.94	47.09	4.95	58.82	45.89	5.44	55.52	44.63	5.98	51.96	43.27	6.56	48.04	41.75	7.20
	63 (17.2)††	60.84	46.68	4.45	58.11	45.56	4.90	55.17	44.34	5.39	52.08	43.07	5.93	48.77	41.69	6.52	45.14	40.17	7.16
	62 (16.7)	60.44	60.44	4.45	58.18	58.18	4.90	55.72	55.72	5.40	53.10	53.10	5.94	50.23	50.23	6.54	46.99	46.99	7.18
	57 (13.9)	60.47	60.47	4.45	58.19	58.19	4.90	55.73	55.73	5.40	53.10	53.10	5.94	50.23	50.23	6.54	47.00	47.00	7.18

COOLING INDOOR MODEL	CAPACITY	POWER	FURNACE MODEL
*CAP**6024A**	1.00	1.00	
CAP**6021A**	0.98	0.98	
CNPH*6024A**	0.99	1.00	
CNPV*6024A**	0.99	1.00	
CSPH*6012A**	1.00	1.00	
FE4ANB006	1.00	0.96	
FV4BNB006	1.00	0.96	
FX4CN(B,F)060	1.00	0.98	
CAP**6024A**	0.98	0.98	58CV(A,X)135–22
CNPH*6024A**	0.98	0.97	58CV(A,X)135–22

COOLING INDOOR MODEL	CAPACITY	POWER	FURNACE MODEL
CNPV*6024A**	0.98	0.97	58CV(A,X)135–22
CSPH*6012A**	0.98	0.97	58CV(A,X)135–22
CAP**6024A**	0.99	0.97	58CV(A,X)155–22
CNPH*6024A**	0.99	0.97	58CV(A,X)155–22
CNPV*6024A**	0.99	0.97	58CV(A,X)155–22
CSPH*6012A**	0.98	0.97	58CV(A,X)155–22
CAP**6021A**	0.98	0.98	58MEB100–20
CNPH*6024A**	0.98	0.98	58MEB100–20
CSPH*6012A**	0.98	0.98	58MEB100–20

COOLING INDOOR MODEL	CAPACITY	POWER	FURNACE MODEL
CAP**6024A**	0.98	0.98	58MEB120–20
CNPH*6024A**	0.98	0.98	58MEB120–20
CNPV*6024A**	0.98	0.98	58MEB120–20
CSPH*6012A**	0.98	0.98	58MEB120–20
CAP**6021A**	0.98	0.97	58PH*110–20
CNPH*6024A**	0.98	0.97	58PH*110–20
CSPH*6012A**	0.98	0.97	58PH*110–20
CSPH*6012A**	0.98	0.97	58PH*135–20

See notes on page 31

* Tested combination.

† Total and sensible capacities are net capacities. Blower motor heat has been subtracted.

‡ Sensible capacities shown are based on 80°F (27°C) entering air at the indoor coil. For sensible capacities at other than 80°F (27°C), deduct 835 Btuh (245 kW) per 1000 CFM (480 L/S) of indoor coil air for each degree below 80°F (27°C), or add 835 Btuh (245 kW) per 1000 CFM (480 L/S) of indoor coil air per degree above 80°F (27°C).

Detailed cooling capacities are based on indoor and outdoor unit at the same elevation per ARI standard 210/240–2008. If additional tubing length and/or indoor unit is located above outdoor unit, a slight variation in capacity may occur.

** System kw is total of indoor and outdoor unit kilowatts.

†† At TVA rating indoor condition (75°F edb/63°F ewb). All other indoor air temperatures are at 80°F edb.

NOTE: When the required data falls between the published data, interpolation may be performed. Extrapolation is not an acceptable practice.

EWB — Entering Wet Bulb

NOTE: When the required data fall between the published data, interpolation may be performed. Extrapolation is not an acceptable practice.

CONDENSER ONLY RATINGS*

SST °F (°C)		CONDENSER ENTERING AIR TEMPERATURES °F (°C)							
		55 (12.78)	65 (18.33)	75 (23.89)	85 (29.44)	95 (35.0)	105 (40.56)	115 (46.11)	125 (51.67)
24ABB318(A,W)31									
30 (−1.11)	TCG	16.10	15.20	14.20	13.30	12.30	11.30	10.20	9.10
	SDT	70.80	80.40	89.90	99.50	109.10	118.80	128.60	138.50
	KW	0.83	0.95	1.09	1.24	1.40	1.57	1.76	1.95
35 (1.67)	TCG	17.70	16.70	15.70	14.70	13.70	12.60	11.50	10.30
	SDT	71.90	81.40	90.90	100.40	109.90	119.60	129.40	139.10
	KW	0.83	0.95	1.09	1.24	1.40	1.58	1.77	1.97
40 (4.44)	TCG	19.50	18.40	17.40	16.20	15.10	14.00	12.80	11.50
	SDT	73.00	82.50	91.90	101.30	110.80	120.40	130.10	139.70
	KW	0.83	0.95	1.09	1.23	1.40	1.58	1.77	1.98
45 (7.22)	TCG	21.30	20.20	19.00	17.90	16.70	15.40	14.20	12.80
	SDT	74.20	83.60	93.00	102.30	111.70	121.20	130.70	140.30
	KW	0.83	0.95	1.08	1.23	1.40	1.58	1.78	1.99
50 (10.0)	TCG	23.30	22.00	20.80	19.50	18.20	16.90	15.60	14.20
	SDT	75.40	84.80	94.10	103.40	112.60	122.00	131.40	140.90
	KW	0.82	0.95	1.08	1.23	1.40	1.58	1.78	1.99
55 (12.78)	TCG	25.20	23.90	22.50	21.20	19.80	18.50	17.00	15.50
	SDT	76.70	86.00	95.20	104.40	113.60	122.90	132.20	141.50
	KW	0.82	0.94	1.08	1.23	1.39	1.58	1.78	1.99
24ABB324(A,W)31									
30 (−1.11)	TCG	21.30	20.10	18.90	17.70	16.50	15.20	14.00	12.60
	SDT	73.00	82.40	91.80	101.20	110.60	120.20	129.80	139.40
	KW	1.06	1.21	1.37	1.56	1.77	1.99	2.24	2.51
35 (1.67)	TCG	23.40	22.10	20.90	19.60	18.20	16.90	15.50	14.10
	SDT	74.40	83.60	93.00	102.30	111.70	121.10	130.60	140.20
	KW	1.06	1.21	1.38	1.57	1.77	2.00	2.25	2.52
40 (4.44)	TCG	25.60	24.20	22.90	21.50	20.00	18.60	17.10	15.60
	SDT	75.80	85.00	94.20	103.50	112.70	122.10	131.50	140.90
	KW	1.07	1.22	1.39	1.58	1.78	2.01	2.26	2.53
45 (7.22)	TCG	27.90	26.40	24.90	23.40	21.90	20.40	18.80	17.10
	SDT	77.30	86.30	95.50	104.70	113.80	123.10	132.30	141.60
	KW	1.08	1.23	1.40	1.58	1.79	2.02	2.27	2.54
50 (10.0)	TCG	30.20	28.60	27.00	25.40	23.70	22.10	20.40	18.60
	SDT	78.80	87.80	96.80	105.90	114.90	124.10	133.30	142.40
	KW	1.09	1.24	1.40	1.59	1.80	2.03	2.28	2.55
55 (12.78)	TCG	32.60	30.80	29.10	27.30	25.60	23.90	22.10	20.20
	SDT	80.30	89.20	98.20	107.10	116.10	125.20	134.20	143.10
	KW	1.09	1.25	1.41	1.60	1.81	2.03	2.28	2.55
24ABB330(A,W)31									
30 (−1.11)	TCG	25.40	24.00	22.60	21.10	19.60	18.00	16.40	14.60
	SDT	74.40	83.60	92.90	102.10	111.40	120.80	130.20	139.60
	KW	1.35	1.52	1.70	1.91	2.13	2.37	2.63	2.89
35 (1.67)	TCG	28.00	26.50	24.90	23.40	21.70	20.00	18.30	16.40
	SDT	75.90	85.00	94.20	103.40	112.60	121.90	131.20	140.50
	KW	1.35	1.52	1.71	1.92	2.15	2.39	2.65	2.92
40 (4.44)	TCG	30.70	29.10	27.40	25.70	24.00	22.20	20.30	18.40
	SDT	77.40	86.50	95.60	104.70	113.80	123.00	132.20	141.40
	KW	1.35	1.53	1.72	1.93	2.15	2.40	2.67	2.95
45 (7.22)	TCG	33.50	31.80	30.00	28.20	26.30	24.40	22.40	20.30
	SDT	79.00	88.00	97.00	106.10	115.10	124.20	133.30	142.30
	KW	1.36	1.53	1.72	1.93	2.16	2.42	2.69	2.97
50 (10.0)	TCG	36.50	34.60	32.70	30.70	28.70	26.70	24.60	22.30
	SDT	80.70	89.70	98.50	107.50	116.40	125.40	134.30	143.20
	KW	1.36	1.54	1.73	1.94	2.17	2.43	2.70	2.99
55 (12.78)	TCG	39.50	37.40	35.30	33.20	31.10	29.00	26.70	24.30
	SDT	82.40	91.30	100.10	108.90	117.80	126.60	135.40	144.20
	KW	1.37	1.54	1.74	1.95	2.18	2.44	2.71	3.00
24ABB336(A,W)31									
30 (−1.11)	TCG	30.30	28.80	27.20	25.50	23.80	22.00	20.00	18.00
	SDT	73.20	82.20	91.40	100.60	109.90	119.10	128.40	137.80
	KW	1.65	1.85	2.07	2.30	2.57	2.88	3.25	3.68
35 (1.67)	TCG	33.50	31.80	30.10	28.30	26.40	24.40	22.30	20.10
	SDT	74.80	83.80	92.80	102.00	111.10	120.30	129.50	138.70
	KW	1.66	1.87	2.08	2.32	2.59	2.90	3.26	3.69
40 (4.44)	TCG	37.00	35.10	33.20	31.20	29.20	27.00	24.80	22.40
	SDT	76.60	85.40	94.40	103.40	112.40	121.50	130.60	139.70
	KW	1.68	1.89	2.10	2.34	2.61	2.92	3.28	3.70
45 (7.22)	TCG	40.70	38.60	36.50	34.30	32.10	29.80	27.40	24.80
	SDT	78.50	87.20	96.00	104.90	113.80	122.80	131.80	140.80
	KW	1.70	1.91	2.13	2.37	2.63	2.94	3.30	3.72
50 (10.0)	TCG	44.60	42.30	40.00	37.70	35.30	32.80	30.20	27.40
	SDT	80.50	89.10	97.80	106.50	115.30	124.20	133.00	141.90
	KW	1.73	1.94	2.16	2.40	2.66	2.97	3.32	3.73
55 (12.78)	TCG	48.80	46.30	43.80	41.30	38.70	36.00	33.20	30.20
	SDT	82.60	91.10	99.60	108.20	116.90	125.60	134.30	143.00
	KW	1.77	1.97	2.19	2.43	2.70	3.00	3.35	3.76

See notes on page 33

CONDENSER ONLY RATINGS* CONTINUED

SST °F (°C)		CONDENSER ENTERING AIR TEMPERATURES °F (°C)							
		55 (12.78)	65 (18.33)	75 (23.89)	85 (29.44)	95 (35.0)	105 (40.56)	115 (46.11)	125 (51.67)
24ABB342(A,W)30									
30 (−1.11)	TCG	38.00	36.00	33.90	31.90	29.70	27.60	25.30	22.90
	SDT	73.20	82.30	91.40	100.60	109.80	119.10	128.40	137.70
	KW	1.95	2.20	2.48	2.80	3.14	3.53	3.95	4.41
35 (1.67)	TCG	41.90	39.70	37.40	35.10	32.80	30.50	28.00	25.50
	SDT	74.80	83.70	92.80	101.90	111.00	120.20	129.40	138.60
	KW	1.97	2.22	2.50	2.81	3.16	3.54	3.97	4.43
40 (4.44)	TCG	46.00	43.60	41.10	38.70	36.20	33.60	30.90	28.10
	SDT	76.40	85.20	94.20	103.20	112.20	121.30	130.40	139.50
	KW	1.98	2.23	2.52	2.83	3.18	3.56	3.98	4.44
45 (7.22)	TCG	50.30	47.70	45.10	42.40	39.60	36.80	33.90	30.90
	SDT	78.10	86.90	95.70	104.60	113.50	122.50	131.40	140.40
	KW	2.01	2.26	2.54	2.85	3.19	3.58	4.00	4.45
50 (10.0)	TCG	54.90	52.10	49.20	46.20	43.20	40.20	37.00	33.60
	SDT	80.00	88.60	97.20	106.00	114.80	123.70	132.50	141.30
	KW	2.03	2.28	2.56	2.87	3.21	3.60	4.01	4.47
55 (12.78)	TCG	59.70	56.60	53.40	50.20	46.90	43.50	40.10	36.40
	SDT	81.90	90.30	98.90	107.50	116.20	124.90	133.60	142.20
	KW	2.06	2.30	2.58	2.89	3.23	3.62	4.03	4.48
24ABB348(A,W)31									
30 (−1.11)	TCG	41.10	38.90	36.70	34.40	32.10	29.70	27.20	24.50
	SDT	73.80	83.00	92.30	101.60	111.00	120.40	129.70	139.10
	KW	2.19	2.46	2.76	3.10	3.47	3.87	4.30	4.76
35 (1.67)	TCG	45.20	42.80	40.50	38.00	35.50	32.90	30.20	27.40
	SDT	75.30	84.40	93.70	102.90	112.20	121.50	130.80	140.00
	KW	2.22	2.49	2.79	3.13	3.50	3.90	4.34	4.81
40 (4.44)	TCG	49.60	47.10	44.50	41.90	39.20	36.40	33.50	30.40
	SDT	76.90	86.00	95.10	104.30	113.40	122.60	131.80	141.00
	KW	2.24	2.51	2.82	3.15	3.53	3.93	4.38	4.85
45 (7.22)	TCG	54.30	51.60	48.80	46.00	43.10	40.10	36.90	33.60
	SDT	78.50	87.50	96.60	105.70	114.70	123.80	132.90	142.00
	KW	2.27	2.54	2.85	3.19	3.56	3.97	4.41	4.89
50 (10.0)	TCG	59.30	56.40	53.40	50.30	47.10	43.90	40.50	36.90
	SDT	80.20	89.20	98.10	107.10	116.10	125.10	134.10	143.00
	KW	2.30	2.58	2.88	3.22	3.59	4.00	4.45	4.92
55 (12.78)	TCG	64.60	61.40	58.10	54.80	51.40	47.90	44.20	40.30
	SDT	82.10	91.00	99.80	108.70	117.50	126.40	135.20	144.00
	KW	2.34	2.61	2.92	3.25	3.63	4.04	4.48	4.96
24ABB360(A,W)31									
30 (−1.11)	TCG	54.90	51.90	49.00	46.00	42.90	39.80	36.50	33.10
	SDT	77.60	86.40	95.30	104.20	113.20	122.20	131.20	140.20
	KW	2.73	3.07	3.45	3.88	4.34	4.85	5.41	6.01
35 (1.67)	TCG	60.30	57.10	53.90	50.70	47.30	43.90	40.30	36.50
	SDT	79.50	88.20	97.00	105.80	114.70	123.60	132.50	141.30
	KW	2.79	3.13	3.51	3.94	4.40	4.92	5.48	6.08
40 (4.44)	TCG	66.00	62.60	59.10	55.50	51.90	48.20	44.30	40.10
	SDT	81.60	90.20	98.80	107.50	116.30	125.00	133.80	142.50
	KW	2.86	3.20	3.58	4.00	4.47	4.98	5.54	6.15
45 (7.22)	TCG	72.10	68.30	64.50	60.70	56.70	52.60	48.40	43.80
	SDT	83.80	92.20	100.70	109.30	117.90	126.50	135.10	143.60
	KW	2.93	3.27	3.65	4.08	4.54	5.06	5.61	6.21
50 (10.0)	TCG	78.50	74.40	70.20	66.00	61.60	57.20	52.50	47.50
	SDT	86.10	94.40	102.70	111.20	119.60	128.10	136.50	144.80
	KW	3.01	3.35	3.73	4.15	4.62	5.13	5.68	6.27
55 (12.78)	TCG	85.10	80.60	76.10	71.40	66.70	61.80	56.70	51.20
	SDT	88.60	96.60	104.80	113.10	121.40	129.70	137.90	146.00
	KW	3.09	3.44	3.81	4.24	4.70	5.21	5.75	6.34

* ARI listing applies only to systems shown in Combination Ratings table.

KW – Outdoor Unit Kilowatts Only.

SDT – Saturated Temperature Leaving Compressor (°F/°C)

SST – Saturated Temperature Entering Compressor (°F/°C)

TCG – Gross Cooling Capacity (1000 Btuh)

GUIDE SPECIFICATIONS
GENERAL

System Description

Outdoor-mounted, air-cooled, split-system air conditioner unit suitable for ground or rooftop installation. Unit consists of a hermetic compressor, an air-cooled coil, propeller-type condenser fan, and a control box. Unit will discharge supply air upward as shown on contract drawings. Unit will be used in a refrigeration circuit to match up to a packaged fan coil or coil unit.

Quality Assurance

— Unit will be rated in accordance with the latest edition of AHRI Standard 210.

— Unit will be certified for capacity and efficiency, and listed in the latest AHRI directory.

— Unit construction will comply with latest edition of ANSI/ ASHRAE and with NEC.

— Unit will be constructed in accordance with UL standards and will carry the UL label of approval. Unit will have c-UL-us approval.

— Unit cabinet will be capable of withstanding Federal Test Method Standard No. 141 (Method 6061) 500-hr salt spray test.

— Air-cooled condenser coils will be leak tested at 150 psig and pressure tested at 450 psig.

— Unit constructed in ISO9001 approved facility.

Delivery, Storage, and Handling

— Unit will be shipped as single package only and is stored and handled per unit manufacturer's recommendations.

Warranty (for inclusion by specifying engineer)

— U.S. and Canada only.

PRODUCTS

Equipment

Factory assembled, single piece, air-cooled air conditioner unit. Contained within the unit enclosure is all factory wiring, piping, controls, compressor, refrigerant charge Puron® (R-410A), and special features required prior to field start-up.

Unit Cabinet

— Unit cabinet will be constructed of galvanized steel, bonderized, and coated with a powder coat paint.

Fans

— Condenser fan will be direct-drive propeller type, discharging air upward.

— Condenser fan motors will be totally enclosed, 1-phase type with class B insulation and permanently lubricated bearings. Shafts will be corrosion resistant.

— Fan blades will be statically and dynamically balanced.

— Condenser fan openings will be equipped with coated steel wire safety guards.

Compressor

— Compressor will be hermetically sealed.

— Compressor will be mounted on rubber vibration isolators.

Condenser Coil

— Condenser coil will be air cooled.

— Coil will be constructed of aluminum fins mechanically bonded to copper tubes which are then cleaned, dehydrated, and sealed.

Refrigeration Components

— Refrigeration circuit components will include liquid-line shutoff valve with sweat connections, vapor-line shutoff valve with sweat connections, system charge of Puron® (R-410A) refrigerant, and compressor oil.

— Unit will be equipped with high-pressure switch, low pressure switch and filter drier for Puron refrigerant.

Operating Characteristics

— The capacity of the unit will meet or exceed _____ Btuh at a suction temperature of _____ °F/°C. The power consumption at full load will not exceed _____ kW.

— Combination of the unit and the evaporator or fan coil unit will have a total net cooling capacity of _____ Btuh or greater at conditions of _____ CFM entering air temperature at the evaporator at _____ °F/°C wet bulb and _____ °F/°C dry bulb, and air entering the unit at _____ °F/°C.

— The system will have a SEER of _____ Btuh/watt or greater at DOE conditions.

Electrical Requirements

— Nominal unit electrical characteristics will be _____ v, single phase, 60 hz. The unit will be capable of satisfactory operation within voltage limits of _____ v to _____ v.

— Unit electrical power will be single point connection.

— Control circuit will be 24v.

Special Features

— Refer to section of this literature identifying accessories and descriptions for specific features and available enhancements.

Copyright 2009 Carrier Corp. • 7310 W. Morris St. • Indianapolis, IN 46231 Printed in U.S.A. Edition Date: 03/09 **Catalog No: 24ABB3-5PD**

Manufacturer reserves the right to change, at any time, specifications and designs without notice and without obligations.

Replaces: 24ABB3-4PD