40MB*D / 38MAQ / 38MBQ
Ducted Split System
Sizes 09 to 48

Carrier
turn to the experts

Product Data

INDUSTRY LEADING FEATURES / BENEFITS

A PERFECT BALANCE BETWEEN BUDGET LIMITS, ENERGY SAVINGS AND COMFORT.

The 40MBD series ducted split systems are a matched combination of an outdoor condensing unit and an indoor fan coil unit connected only by refrigerant tubing and wires.

The fan coil is mounted in the ceiling. This selection of fan coils permits creative solutions to design problems such as:

- Add-ons to current space (an office or family room addition)
- Special space requirements
- When changes in the load cannot be handled by the existing system.
- Historical renovations or any application where preserving the look of the original structure is essential.

These compact indoor fan coil units take up very little space above the ceiling. Advanced system components incorporate innovative technology to provide reliable cooling performance at low sound levels.

LOW SOUND LEVELS

When sound ordinances and proximity to neighbors demand quiet operation, the 38MAQ unit is the right choice: The advanced, horizontal airflow design distributes air more evenly over the coil.

SECURE OPERATION

If security is an issue, outdoor and indoor units are connected only by refrigerant piping and wiring to prevent intruders from crawling through ductwork. In addition, since 38MAQ units can be installed close to an outside wall, coils are protected from vandals and severe weather.

FAST INSTALLATION

This compact ducted split system is simple to install. A mounting bracket and duct work is needed for the indoor units, and only wire and piping need to be run between indoor and outdoor units. These units are fast and easy to install ensuring minimal disruption to customers in the home or workplace. This makes the 40MBD / 38MAQ / 38MBQ ducted split systems the equipment of choice, especially in retrofit situations.

SIMPLE SERVICING AND MAINTENANCE

Removing the top panel on outdoor units provides immediate access to the control compartment, providing a service technician access to check unit operation. In addition, the draw-thru design of the outdoor section means that dirt accumulates on the outside surface of the coil. Coils can be cleaned quickly from the inside using a pressure hose and detergent.

On all indoor units, service and maintenance expense is reduced due to easy accessible service panels. In addition, these ducted systems have extensive self-diagnostics to assist in troubleshooting.

BUILT-IN RELIABILITY

Ducted split system indoor and outdoor units are designed to provide years of trouble-free operation.

The ducted indoor units include protection against freeze-up and high evaporator temperatures on heat pumps.

The condensing units on heat pumps are protected by a three minute time delay before the compressor will start the over-current protection and the high temperature protection.

INDIVIDUAL ROOM COMFORT

Maximum comfort is provided because each space can be controlled individually based on usage pattern. The air sweep feature provided permits optimal room air mixing to eliminate hot and cold spots for occupant comfort. In addition, year-round comfort can be provided with heat pumps.

ECONOMICAL OPERATION

The ducted split system design allows individual or multi-room heating or cooling when required. There is no need to run large supply-air fans or chilled water pumps to handle a few spaces with unique load patterns.

EASY-TO-USE CONTROLS

The ducted units have microprocessor-based controls to provide the ultimate in comfort and efficiency. The user friendly wired and wireless remote control provides the interface between user and the unit.

CONDENSATE PUMP

Factory installed condensate pump on the ducted fan coil provides installation flexibility.

STANDARD WIRED CONTROLLER

AGENCY LISTINGS

All systems are listed with AHRI (Air Conditioning, Heating & Refrigeration Institute), and ETL.

MODEL NUMBER NOMENCLATURE

INDOOR UNIT

40 MB Q B 09 D - - 3

40= FAN COIL UNIT

MB = MODEL

SYSTEM TYPE
Q = HEAT PUMP

MAXIMUM NUMBER OF FAN COIL UNITS THAT CAN BE CONNECTED TO THE OUTDOOR UNIT
B=1:1

NOMINAL CAPACITY
09 - 3/4 TON
12 - 1 TON
18 - 1- 1/2 TONS
24 - 2 TONS
36 - 3 TONS
48 - 4 TONS

VOLTAGE
3 = 208/230- 1- 60

NOT USED

INDOOR FAN COIL TYPE
D = DUCTED

OUTDOOR UNIT

38 MA Q B 09 - - - 3

38 = OUTDOOR UNIT

MA = MODEL SIZES 09- 24
MB = MODEL SIZES 36- 48

SYSTEM TYPE
Q = HEAT PUMP

MAXIMUM NUMBER OF FAN COIL UNITS THAT CAN BE CONNECTED TO THE OUTDOOR UNIT
B=1:1

NOMINAL CAPACITY
09 - 3/4 TON
12 - 1 TON
18 - 1- 1/2 TONS
24 - 2 TONS
36 - 3 TONS
48 - 4 TONS

VOLTAGE
3 = 208/230- 1- 60

NOT USED

UNIT TYPE
- = OUTDOOR UNIT

Use of the AHRI Certified TM Mark indicates a manufacturer's participation in the program For verification of certification for individual products, go to www.ahridirectory.org.

STANDARD FEATURES AND ACCESSORIES

Ease Of Installation	
Mounting Brackets	S
Low Voltage Controls	S
Comfort Features	
Microprocessor Controls	S
Wired Remote Control	S
Wireless Remote Control	S
Automatic Horizontal Air Sweep	S
Air Direction Control	S
Auto Restart Function	S
Cold Blow Protection On Heat Pumps	S
Freeze Protection Mode On Heat Pumps	S
Turbo Mode	S
Silence Mode	S
Auto Changeover On Heat Pumps	S
Follow Me	S
Energy Saving Features	
Sleep Mode	S
Stop/Start Timer	S
46° F Heating Mode (Heating Setback)	S
Safety And Reliability	
3 Minute Time Delay For Compressor	S
Over Current Protection For Compressor	S
Indoor Coil Freeze Protection	S
Indoor Coil High Temp Protection in Heating Mode	S
Condenser High Temp Protection in Cooling Mode	S
Ease Of Service And Maintenance	
Cleanable Filters	S
Diagnostics	S
Liquid Line Pressure Taps	S
Application Flexibility	
Condensate Pumps	S
Crankcase Heater	S

Legend
S Standard
A Accessory

OUTDOOR UNITS

Crankcase Heater

Standard on all unit sizes. Heater clamps around compressor oil stump.

DIMENSIONS - INDOOR

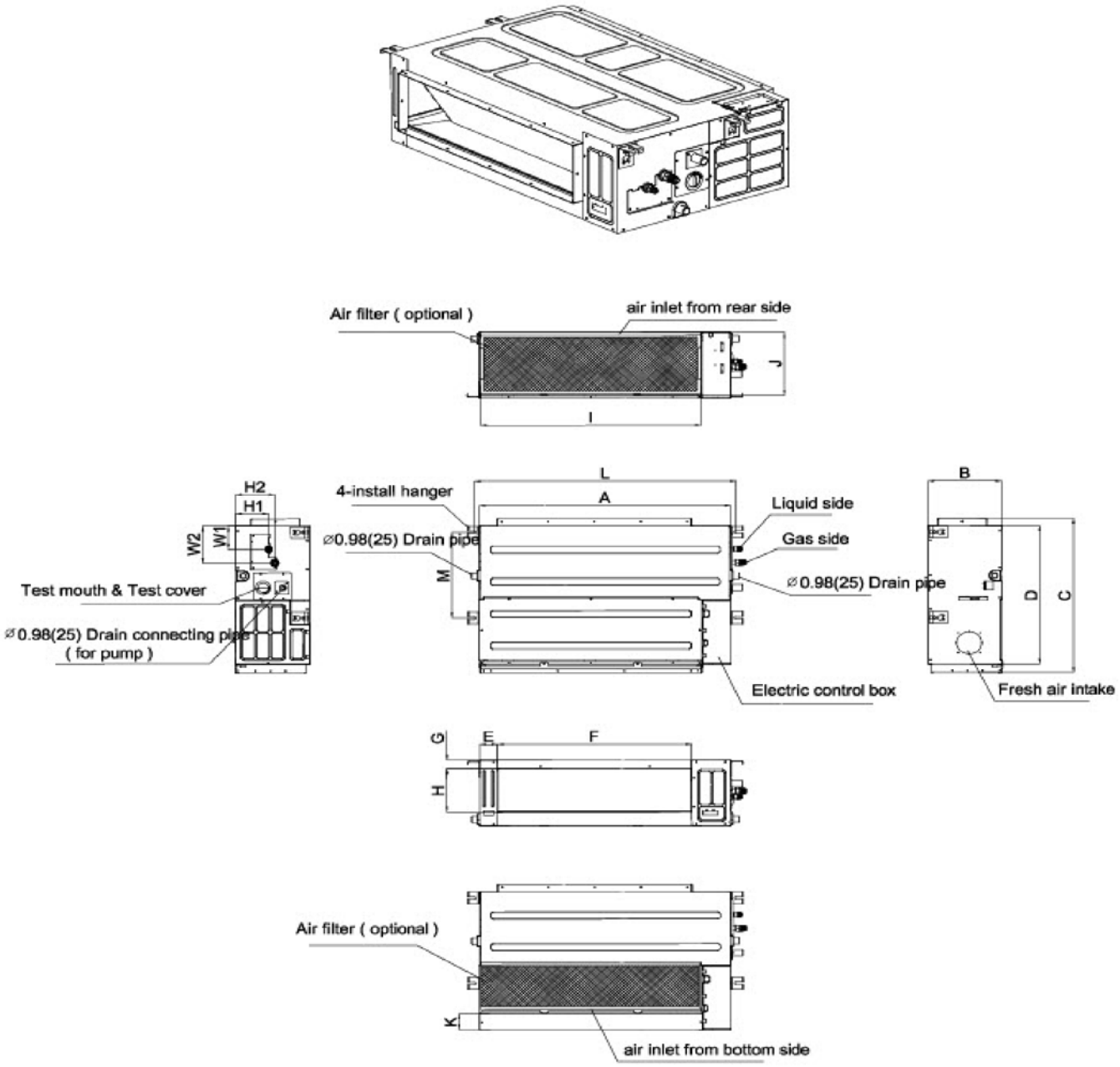

Fig. 1 – Indoor unit

	Outline dimensions				Air outlet opening size				Air return opening size			Hanger Brackets		Refrigerant Pipe Locations			
Size	**A**	**B**	**C**	**D**	**E**	**F**	**G**	**H**	**I**	**J**	**K**	**L**	**M**	**H1**	**H2**	**W1**	**W2**
9	27.6 (700)	8.2 (210)	25 (635)	22.4 (570)	2.5 (65)	19.4 (493)	1.3 (35)	4.6 (119)	23.4 (595)	7.8 (200)	3.1 (80)	29.1 (740)	13.8 (350)	4.7 (120)	5.6 (143)	3.7 (95)	5.9 (150)
12	27.6 (700)	8.2 (210)	25 (635)	22.4 (570)	2.5 (65)	19.4 (493)	1.3 (35)	4.6 (119)	23.4 (595)	7.8 (200)	3.1 (80)	29.1 (740)	13.8 (350)	4.7 (120)	5.6 (143)	3.7 (95)	5.9 (150)
18	36.2 (920)	8.2 (210)	25 (635)	22.4 (570)	2.5 (65)	19.4 (493)	1.3 (35)	4.6 (119)	32.0 (815)	7.8 (200)	3.1 (80)	37.8 (960)	13.8 (350)	4.7 (120)	5.6 (143)	3.7 (95)	5.9 (150)
24	36.2 (920)	10.6 (270)	25 (635)	22.4 (570)	2.5 (65)	19.4 (493)	1.3 (35)	7.0 (179)	32.0 (815)	10.2 (260)	0.7 (20)	37.8 (960)	13.8 (350)	4.7 (120)	5.6 (143)	3.7 (95)	5.9 (150)
36	44.8 (1140)	10.6 (270)	30.5 (775)	27.9 (710)	2.5 (65)	36.7 (933)	1.3 (35)	7.0 (179)	40.7 (1035)	10.2 (260)	1.7 (45)	48.8 (1240)	19.7 (500)	4.7 (120)	5.6 (143)	3.7 (95)	5.9 (150)
48	47.2 (1200)	11.8 (300)	34.1 (865)	31.4 (800)	3.1 (80)	38.1 (968)	1.5 (40)	8.0 (204)	43.0 (1094)	11.3 (288)	1.7 (45)	48.8 (1240)	19.7 (500)	6.9 (175)	7.8 (198)	6.1 (155)	8.3 (210)

DIMENSIONS - OUTDOOR

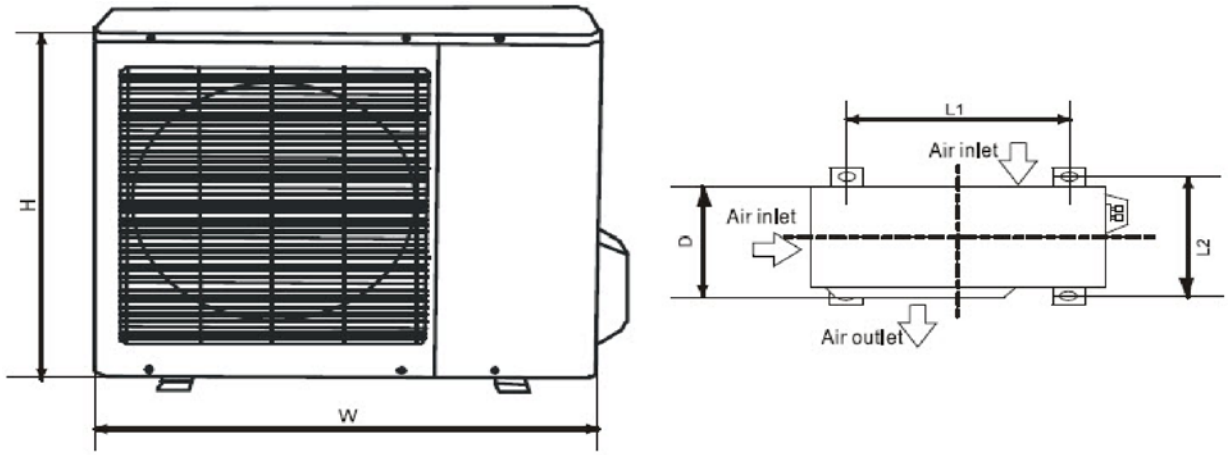

Fig. 2 – Outdoor unit

Unit Size	W in (mm)	D in (mm)	H in (mm)	L1 in (mm)	L2 in (mm)	Operating Weight lb (kg)
9K	31.8(810)	12.2(310)	21.9(558)	21.6(549)	12.8(325)	82.4(37.4)
12K	31.8(810)	12.2(310)	21.9(558)	21.6(549)	12.8(325)	82.4(37.4)
18K	33.2(845)	12.6(320)	27.5(700)	22.0(560)	13.1(405)	102.5(46.5)
24K	37.2(945)	15.5(395)	31.8(810)	25.2(640)	15.9(405)	137.5(62.4)
36K	37.2(945)	15.5(395)	31.8(810)	25.2(640)	15.9(405)	137.5(62.4)
48K	36.93(938)	15.4(392)	53.9(1369)	24.9(634)	15.9(404)	220(100)

CLEARANCES - INDOOR

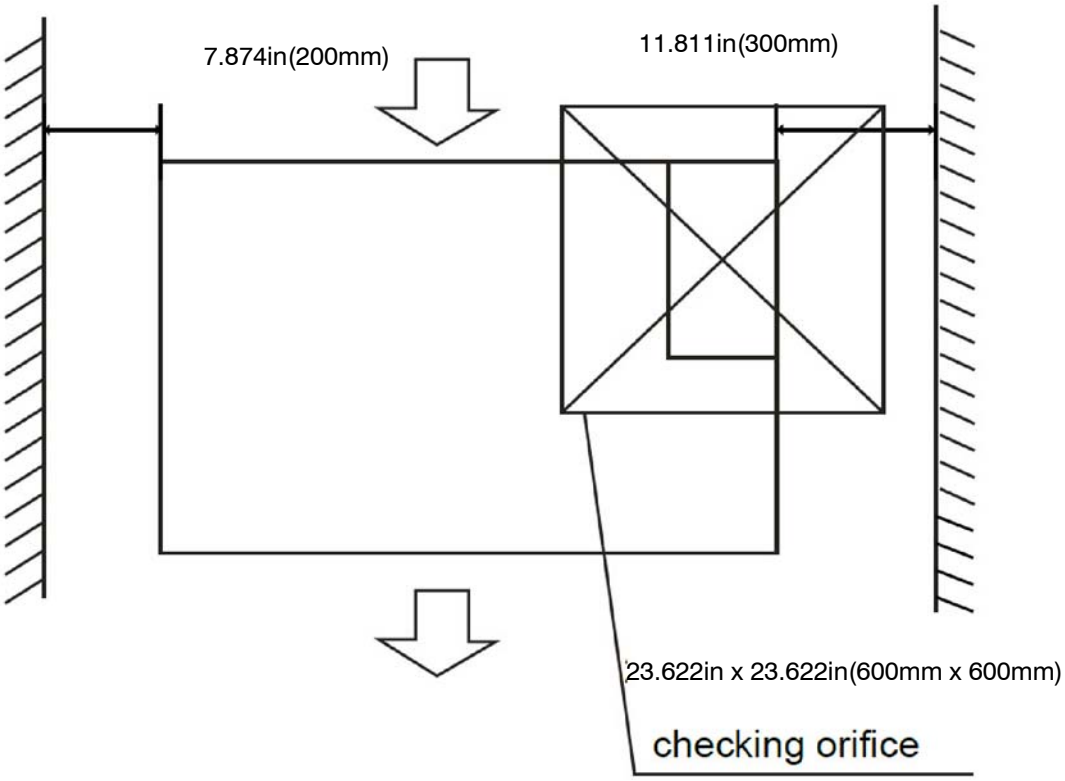

Fig. 3 – Indoor Unit Clearance

CLEARANCES - OUTDOOR

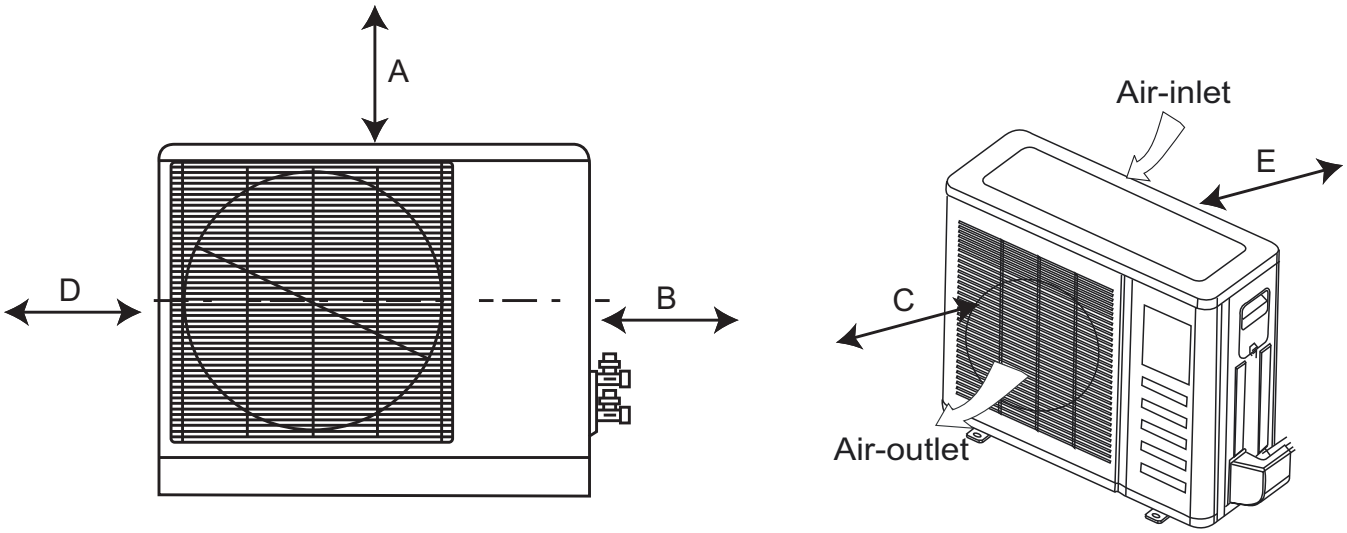

Fig. 4 – Clearances Outdoor

UNIT	Minimum Value in. (mm)
A	24 (609)
B	24 (609)
C	24 (609)
D	4 (101)
E	4 (101)

SPECIFICATIONS

	Size		9	12	18	24	36	48
System	Outdoor Model		38MAQB09---3	38MAQB12---3	38MAQB18---3	38MAQB24---3	38MBQB36---3	38MBQB48---3
	Indoor Model		40MBQB09D--3	40MBQB12D--3	40MBQB18D--3	40MBQB24D--3	40MBQB36D--3	40MBQB48D--3
	Energy Star		YES	YES	YES	YES	NO	NO
Performance	Cooling Rated Capacity	Btu/h	9,000	11,000	16,000	23,000	36,000	48,000
	Cooling Cap. Range Min - Max	Btu/h	3,500~11,000	4,000~13,000	4,500~18,000	5,500~24,500	8,500~38,000	9,000~50,000
	SEER		19.0	18.0	18.5	19.0	15.5	16.5
	EER		13.5	12.5	12.5	12.5	8.5	8.2
	Heating Rated Capacity	Btu/h	10,000	11,600	18,000	24,400	38,000	50,000
	Heating Cap. Range Min - Max	Btu/h	4,500~11,500	5,000~13,500	5,500~19,000	6,000~26,000	9,500~50,000	10,000~55,000
	HSPF		10.0	10.0	9.6	10.5	10.5	10.0
Controls	Wireless Remote Controller (°F/°C Convertible)		Standard					
	Wired Remote Controller (°F/°C Convertible)		Standard					
Operating Range	Cooling Outdoor DB Min - Max	°F	4~122	4~122	4~122	4~122	4~122	4~122
	Heating Outdoor DB Min - Max	°F	4~86	4~86	4~86	4~86	4~86	4~86
Piping	Total Piping Length	Ft.	82	82	98	98	213	213
	Piping Lift*	Ft.	32	32	65	65	98	98
	Pipe Connection Size - Liquid	In.	1/4	1/4	1/4	3/8	3/8	3/8
	Pipe Connection Size - Suction	In.	3/8	1/2	1/2	5/8	5/8	5/8
Refrigerant	Type		R410A					
	Design Pressure	PSIG	550	550	550	550	550	550
	Metering Device		Electric Expansion Valve			Capillary Tubes	Electric Expansion Valve	
	Charge	Lbs.	2.76	2.76	4.19	5.18	7.5	9.48
Outdoor coil	Face Area	Sq. Ft.	9.2	9.2	16.0	21.1	8.2	14.1
	No. Rows		2	2	2	3	2.6	2.0
	Fins per inch		21	21	18	18	17	17.0
	Circuits		4	4	6	8	6	10.0
Indoor Coil	Face Area	Sq. Ft.	1.4	1.4	1.4	2.0	3.5	4.2
	No. Rows		3	3	3	4	4	4
	Fins per inch		16	16	16	16	16	16
	Circuits		4	4	4	6	8	8
Compressor	Type		Hermetic Rotary DC Inverter Compressor					
	Model		ASM98D1UFZA	ASM108D1UFZA	ASM135D23UFZ	DA250S2C-30MT	TNB306FPGMC-L	MNB36FAAMC-L
	Oil Type		VG74	VG74	VG74	VG74	FV50S	FV50S
	Oil Charge	Fl. Oz.	12.5	12.5	15.2	27.7	36.2	47.3
	Rated Current	RLA	5.3	5.7	7.3	8.8	13.5	13.5
Electrical	Voltage, Phase, Cycle	V/Ph/Hz	208/230-1-60	208/230-1-60	208/230-1-60	208/230-1-60	208/230-1-60	208/230-1-60
	Power Supply		Indoor unit powered from outdoor unit					
	MCA	A.	15	15	15	15	30	35
	MOCP - Fuse Rating	A.	15	15	20	25	50	55
Outdoor	Unit Width	In.	31.9	31.9	33.3	37.2	37.2	36.9
	Unit Height	In.	22.0	22.0	27.6	31.9	31.9	53.9
	Unit Depth	In.	12.2	12.2	12.6	15.6	15.6	15.4
	Net Weight	Lbs.	82.4	82.4	120.5	134.0	160.9	220.0
	Airflow	CFM	945	945	1050	1390	2940	4240
	Sound Pressure	dB(A)	56	56	59	62	65	65
Indoor	Unit Width	In.	27.6	27.6	36.2	36.2	44.9	47.2
	Unit Height	In.	8.3	8.3	8.3	10.6	10.6	11.8
	Unit Depth	In.	25.0	25.0	25.0	25.0	30.5	34.1
	Net Weight	Lbs.	39.9	39.9	50.7	57.3	77.2	99.2
	Number of Fan Speeds		3	3	3	3	3	3
	Airflow (lowest to highest)	CFM	290/340/380	290/340/380	400/440/480	590/650/810	680/940/1180	940/1180/1470
	Sound Pressure (lowest to highest)	dB(A)	30/33/36	30/34/38	34/37/38	43/45/48	46/50/52	41/44/46
	Max Static Pressure	In.WG.	0.18	0.18	0.40	0.40	0.40	0.40

COOLING PERFORMANCE DATA

Model	Cooling			Outdoor conditions (DB)					
	Indoor Conditions			77F(25C)	86F(30C)	95F(35C)	104F(40C)	113F(45C)	122F(50C)
	DB	WB							
9	69.8F(21C)	59F(15C)	TC	7.41	7.82	9.73	8.34	6.12	5.1
			SC	6.64	6.69	8.18	7.37	4.36	3.74
			Input	0.35	0.54	0.81	0.8	0.75	0.75
	75.2F(24C)	62.6F(17C)	TC	7.76	9.16	9.89	8.62	6.92	5.83
			SC	3.58	8.11	6.27	5.52	4.85	4.29
			Input	0.35	0.54	0.81	0.8	0.75	0.75
	80.6F(27C)	66.2F(19C)	TC	8.21	9.22	10.41	9.27	7.32	6
			SC	7.39	5.88	8.22	7.79	5.11	4.37
			Input	0.35	0.75	0.82	0.81	0.75	0.75
	89.6F(32C)	73.4F(23C)	TC	8.41	9.72	11.59	10.22	8.82	7.51
			SC	3.68	5.76	6.9	6.2	5.55	5
			Input	0.36	0.56	0.83	0.82	0.76	0.77
12	69.8F(21C)	59F(15C)	TC	8.21	11.75	11.42	9	7.85	6.68
			SC	7.06	9.05	8.68	7.38	6.42	5.58
			Input	0.38	0.8	1.04	0.87	0.82	0.81
	75.2F(24C)	62.6F(17C)	TC	8.42	11.84	12.01	9.35	8.32	7.34
			SC	7.28	8.69	8.66	7.62	6.53	5.81
			Input	0.57	0.94	1.25	1.27	0.98	0.94
	80.6F(27C)	66.2F(19C)	TC	8.81	11.95	12.23	9.69	8.87	7.95
			SC	7.49	8.32	8.63	7.85	6.64	6.04
			Input	0.39	0.75	1.06	0.89	0.85	0.82
	89.6F(32C)	73.4F(23C)	TC	9.01	12.15	12.43	9.89	9.07	8.15
			SC	7.7	8.53	8.84	8.06	6.85	6.25
			Input	0.4	0.97	1.3	1.34	0.92	0.85
18	69.8F(21C)	59F(15C)	TC	12.58	15.24	16.25	11.04	8.32	6.78
			SC	8.34	10.3	10.6	7.93	6.18	5.16
			Input	0.58	0.93	1.53	1.2	1.42	1.32
	75.2F(24C)	62.6F(17C)	TC	13.48	16.41	16.66	12.3	9.43	7.74
			SC	8.85	10.94	11.35	8.62	6.87	5.91
			Input	0.57	0.93	1.56	1.22	1.45	1.35
	80.6F(27C)	66.2F(19C)	TC	14.43	18.04	18.37	13.35	9.97	7.96
			SC	9.59	11.95	12.37	9.28	7.23	6.02
			Input	0.57	0.94	1.59	1.24	1.48	1.38
	89.6F(32C)	73.4F(23C)	TC	14.7	19.03	20.18	15.36	12.02	9.97
			SC	9.08	11.72	12.5	9.69	7.85	6.89
			Input	0.6	0.97	1.62	1.27	1.51	1.41
24	69.8F(21C)	59F(15C)	TC	19.5	20.69	21.43	18.05	14.27	13.32
			SC	15.15	15.61	15.49	14.23	10.03	8.78
			Input	1.2	1.88	2.29	2.14	1.9	1.86
	75.2F(24C)	62.6F(17C)	TC	20.01	21.21	22.31	18.51	15.08	13.3
			SC	15.25	15.71	15.59	14.33	10.13	8.88
			Input	1.2	1.87	2.3	2.21	2.14	1.92
	80.6F(27C)	66.2F(19C)	TC	20.54	21.75	23.21	18.98	15.91	13.3
			SC	15.35	15.81	15.69	14.43	10.23	8.98
			Input	1.21	1.86	2.31	2.26	2.16	1.93
	89.6F(32C)	73.4F(23C)	TC	20.61	22.94	24.4	21.84	19.17	16.66
			SC	15.58	16.04	15.92	14.66	10.46	9.21
			Input	1.22	1.87	2.34	2.33	2.32	1.96
36	69.8F(21C)	59F(15C)	TC	31.83	34.35	30.88	26.58	22.28	17.98
			SC	25.53	26.76	25.25	23.31	18.05	13.66
			Input	2.71	3.85	3.89	3.68	3.47	3.26
	75.2F(24C)	62.6F(17C)	TC	34.39	37.02	33.71	29.08	24.45	19.82
			SC	26.33	27.54	26.22	24.37	18.75	14.2
			Input	2.74	3.92	3.94	3.74	3.54	3.34
	80.6F(27C)	66.2F(19C)	TC	36.95	39.7	36.55	31.59	26.63	21.67
			SC	27.12	28.31	27.19	25.43	19.44	14.74
			Input	2.77	3.98	4	3.8	3.61	3.42
	89.6F(32C)	73.4F(23C)	TC	37.68	40.49	37.28	32.22	27.16	22.1
			SC	27.66	28.87	27.73	25.94	19.83	15.04
			Input	2.83	4.04	4.07	3.86	3.67	3.49
48	69.8F(21C)	59F(15C)	TC	44.27	42.12	40.55	30.06	25.26	20.66
			SC	33.64	32.9	32.12	27.45	20.97	16.17
			Input	3.83	4.28	5.25	3.77	3.62	3.51
	75.2F(24C)	62.6F(17C)	TC	47.83	45.91	44.54	33.88	28.4	23.12
			SC	34.88	34.19	33.54	29.12	23.91	16.95
			Input	3.94	4.35	5.36	3.84	3.65	3.45
	80.6F(27C)	66.2F(19C)	TC	51.39	49.72	48.53	37.71	31.53	25.35
			SC	36.12	35.47	34.95	30.8	26.83	17.74
			Input	4.06	4.43	5.48	3.9	3.69	3.39
	89.6F(32C)	73.4F(23C)	TC	52.41	50.72	49.51	38.47	32.16	25.86
			SC	37.2	24.93	35.99	31.71	27.63	18.26
			Input	4.14	4.51	5.58	3.97	3.76	3.45

LEGEND
DB - Dry Bulb
WB - Wet Bulb
TC - Total Net Cooling Capacity (1000 Btu/hour)
SC - Sensible Capacity (1000 Btu/hour)
Input - Total Power (kW)

HEATING PERFORMANCE DATA

Model	Heating		Outdoor conditions (DB)							
	Indoor Conditions (DB)		53.6F(12C)	44.6F(7C)	39.2F(4C)	32F(0C)	24.8F(-4C)	19.4F(-7C)	17F(-8C)	5F(-15C)
9	59F(15C)	TH	11.18	11.08	10.89	10.65	9.87	9.11	8.27	6.71
		Input	0.73	0.79	1.04	1.01	0.96	0.9	0.84	0.8
	64.4F(18C)	TH	11.06	10.82	10.65	10.54	9.63	8.84	8.01	5.46
		Input	0.78	0.8	1.08	1.03	0.98	0.94	0.9	0.82
	69F(20.5C)	TH	10.84	10.55	10.48	10.32	9.43	8.55	7.95	4.29
		Input	0.8	0.81	1.11	1.05	1	0.98	0.96	0.84
	71.6F(22C)	TH	10.62	10.32	10.21	10.11	9.23	8.41	7.89	4.11
		Input	0.82	0.83	1.15	1.07	1.02	1.02	0.92	0.86
12	59F(15C)	TH	11.78	12.72	12.42	11.32	10.4	9.54	8.9	5.75
		Input	0.79	1.01	1.05	1.1	1.02	1	0.98	0.83
	64.4F(18C)	TH	12.05	12.65	12.32	11.34	10.32	9.32	8.81	6.14
		Input	0.83	1.37	1.4	1.26	1.22	1.27	1.01	0.91
	69F(20.5C)	TH	12.27	12.6	12.12	11.32	10.21	9.12	8.43	6.49
		Input	0.83	1.1	1.12	1.19	1.19	1.25	1.03	0.98
	71.6F(22C)	TH	11.14	12.41	12.01	11.21	10.01	9.02	8.21	6.01
		Input	0.85	1.15	1.16	1.21	1.23	1.31	1.05	1
18	59F(15C)	TH	23.16	20.54	19.42	17.56	16.52	14.28	12.08	9.39
		Input	1.58	1.49	1.48	1.58	1.46	1.4	1.35	1.21
	64.4F(18C)	TH	22.41	20.08	18.66	16.89	16.05	13.94	12.06	9.16
		Input	1.62	1.55	1.55	1.61	1.52	1.45	1.4	1.29
	69F(20.5C)	TH	21.71	19.67	17.93	16.26	15.62	13.62	12.07	8.95
		Input	1.67	1.62	1.63	1.65	1.58	1.5	1.45	1.38
	71.6F(22C)	TH	21.01	18.97	17.23	15.56	14.92	12.92	11.37	8.25
		Input	1.72	1.67	1.68	1.7	1.63	1.55	1.5	1.43
24	59F(15C)	TH	28.6	27.79	25.85	23.56	23.42	23.22	23.16	18.93
		Input	2	2.25	2.24	2.21	2.2	2.23	2.24	2.17
	64.4F(18C)	TH	27.62	27.61	24.52	23.54	23.4	22.52	20.45	17.45
		Input	2.24	2.45	2.35	2.35	2.32	2.23	2.21	2.16
	69F(20.5C)	TH	29.09	29.25	26.75	24.63	22.98	21.85	19.61	16.38
		Input	2.39	2.74	2.64	2.58	2.42	2.25	2.2	2.18
	71.6F(22C)	TH	26.87	27.52	24.21	23.41	22.54	21.67	19.54	16.24
		Input	2	2.25	2.24	2.21	2.2	2.23	2.24	2.17
36	59F(15C)	TH	43.92	42.61	42.58	42.54	38.89	34.52	34.13	28.87
		Input	3.67	4.13	4.19	4.36	4.34	4.29	4.22	3.87
	64.4F(18C)	TH	42.49	41.36	40.43	39.69	36.62	32.23	31.74	26.3
		Input	3.65	4.12	4.18	4.31	4.23	4.14	4.04	3.77
	69F(20.5C)	TH	41.29	40.31	38.64	37.31	34.73	30.32	29.76	24.16
		Input	3.63	4.11	4.18	4.27	4.15	4.02	3.89	3.68
	71.6F(22C)	TH	40.57	39.68	37.56	35.88	33.59	29.17	28.57	22.87
		Input	3.62	4.1	4.18	4.24	4.1	3.95	3.81	3.62
48	59F(15C)	TH	58.98	58.14	53.9	48.25	36.67	35.34	34.38	28.09
		Input	4.33	4.89	4.9	4.9	4.43	4.46	4.46	4.13
	64.4F(18C)	TH	56.5	53.86	51.15	47.54	37.07	34.77	33.57	27.45
		Input	4.51	4.72	4.87	5.06	4.7	4.6	4.57	4.23
	69F(20.5C)	TH	54.39	50.22	48.81	46.94	37.41	34.27	32.89	26.91
		Input	4.67	4.57	4.84	5.2	4.93	4.72	4.66	4.31
	71.6F(22C)	TH	53.19	48.16	47.48	46.59	37.6	33.98	32.5	26.6
		Input	4.75	4.48	4.82	5.27	5.05	4.78	4.71	4.35

LEGEND

DB - Dry Bulb
WB - Wet Bulb
TH - Total Net Heating Capacity (1000 Btu/hour)
Input - Total Power (kW)

FAN AND MOTOR SPECIFICATIONS

System size			DUCTED					
			9K	12K	18K	24K	36K	48K
Indoor fan	material		ABS	ABS	ABS	ABS	ABS	ABS
	Type		LX-140*150*12-41J	LX-140*150*12-41J	LX-142*180*12-42J	LX-188*190*12-40J	LX-188*190*12-40J	LX-188*190*12-40J
	Diameter	inch	5.5	5.5	5.6	7.4	7.4	7.4
	Height	inch	5.9	5.9	7.1	7.5	19.3	19.3
Indoor fan motor	Model		WZDK55-38GS-W	WZDK55-38GS-W	WZDK90-38GS-W	WZDK90-38GS-W	WZDK150-38GS-W	WZDK240-38GS-W
	Type		DC	DC	DC	DC	DC	DC
	Phase		3	3	3	3	3	3
	FLA		1.03	1.03	0.83	0.83	1.263	2.23
	Insulation class		E	E	E	E	E	E
	Safe class		IPX0	IPX0	IPX0	IPX0	IPX0	IPX0
	Input	W	118	118	143	143	167	276
	Output	W	55	55	90	90	150	240
	Range of current	Amps	1.03±10%	1.03±10%	1.15±10%	1.15±10%	1.263±10%	2.23±10%
	Rated current	Amps	1.03	1.03	0.83	0.83	1.263	2.23
	Rated HP	HP	0.073	0.073	0.12	0.12	0.2	0.32
	Speed	rev/min	1100/950/800	1150/1000/900	1100/1050/880/820	1030/880/800	1120/1000/860	1040/950/830
	Rated RPM	rev/min	1450	1450	1200	1200	1180	1200
	Max. input	W	118	118	143	143	167	276
Outdoor fan	material		AS	AS	AS	AS	AS	AS
	Type		ZL-421*117*8-3K	ZL-421*117*8-3K	ZL-460*180*10-3N	ZL-560*139*12-3KN	ZL-560*139*12-3KN	ZL-525*135*12-3KFN
	Diameter	inch	16.5	16.5	18	22	22	20.7
	Height	inch	4.6	4.6	7.1	5.5	5.5	5.3
Outdoor fan motor	Model		WZDK40-38G-W-1	WZDK40-38G-W-1	ZKFN-50-8-2	WZDK120-38G-1	WZDK120-38G-W	WZDK85-38G
	Phase		DC	DC	DC	DC	DC	DC
	FLA		3	3	3	3	3	3
	Type		0.42	0.42	0.85	0.47	1.21	0.33
	Insulation class		E	E	E	E	E	E
	Safe class		IPX0	IPX0	IPX0	IPX0	IPX0	IPX0
	Input	W	46	46	103	145	150	98
	Output	W	40	40	50	120	120	85
	Range of current	Amps	0.42±10%	0.42±10%	0.85±10%	0.47±10%	1.21±10%	0.33±10%
	Rated current	Amps	0.42	0.42	0.85	0.47	1.21	0.33
	Rated HP	HP	0.053	0.053	0.067	0.16	0.16	0.11
	Speed	rev/min	800/700/600	800/700/600	800/700/600	850/750/700	950/850/750	950/850/750
	Rated RPM	rev/min	900	900	800	1050	1050	850
	Max. input	W	46	46	103	145	150	98

APPLICATION DATA

UNIT SELECTION

Select equipment to either match or be slightly less than anticipated peak load. This provides better humidity control, fewer unit cycles, and less part-load operation.

For units used in spaces with high sensible loads, base equipment selection on unit sensible load, not on total anticipated load. Adjust for anticipated room wet bulb temperature to avoid undersizing equipment.

UNIT MOUNTING (INDOOR)

Refer to unit Installation Instructions for further details.

Unit leveling - For reliable operation, units should be level in all planes.

Clearance - Provide adequate clearance for airflow as shown in Fig. 3.

Unit location - Select a location which will provide the best air circulation for the room.

These units should be positioned as accessible as possible above the ceiling. The unit return and discharge should not be obstructed by furniture, curtains, or anything which may cause unit short cycling or air recirculation. Duct the unit in the middle of the selected wall (if possible). Duct towards an outside wall, if available, to make piping easier, and place the unit so it faces the normal location of room occupants.

UNIT MOUNTING (OUTDOOR)

Refer to unit Installation Instructions for further details.

Unit leveling - For reliable operation, units should be level in all planes.

Clearance - Minimum clearance, as shown in Fig. 5, must be provided for airflow. The condensing units are designed for free-blow application. Air inlets and outlets should not be restricted.

Unit location - A location which is convenient to installation and not exposed to strong wind.

A location which can bear the weight of outdoor unit and where the outdoor unit can be mounted in a level position.

Do not install the indoor or outdoor units in a location with special environmental conditions. For those applications, contact your Carrier representative.

MOUNTING

Refer to unit Installation Instructions for further details.

SUPPORT

Adequate support must be provided to support the weight of all fan coils. Refer to the Physical Data section for fan coil weights, and the base unit dimensional drawings for the location of mounting brackets.

SYSTEM OPERATING CONDITIONS

Operating Range Min / Max °F (°C)		
	Cooling	**Heating**
Outdoor DB	4 / 122 (-20 / 50)	4 / 86 (-20 / 30)
Indoor DB	63 / 90 (17 / 32)	32 / 86 (0 / 30)
Indoor WB	59 / 84 (15 / 29)	

Non-Operating Temperature Range Min / Max °F (°C)	
Indoor/Outdoor DB	32 / 86 (0 / 30)

NOTE: Reference the Product Installation Instructions for more information.

METERING DEVICES

The outdoor unit (Sizes 09, 12, 18, 36 & 48) has an electronic expansion valve to manage the refrigerant flow of the fan coil connected. Size 24 has capillary tube metering devices in the outdoor unit.

DRAIN CONNECTIONS

Install drains to meet local sanitation codes. Standard ducted fan coil unit condensate pumps have a maximum lift of 29.5in (750mm).

REFRIGERANT LINES

General refrigerant line sizing:

1. The 38MAQ & 38MBQ units are shipped with a full charge of R410A refrigerant. All charges, line sizing, and capacities are based on runs of 25 ft (7.6 m). For runs over 25 ft (7.6 m), consult long-line section on this page for proper charge adjustments.
2. Refrigerant lines should not be buried in the ground. If it is necessary to bury the lines, not more than 36-in (914 mm) should be buried. Provide a minimum 6-in (152 mm) vertical rise to the service valves to prevent refrigerant migration.
3. Both lines must be insulated. Use a minimum of 1/2-in. (12.7 mm) thick insulation. Closed-cell insulation is recommended in all long-line applications.
4. Special consideration should be given to isolating interconnecting tubing from the building structure. Isolate the tubing so that vibration or noise is not transmitted into the structure.

Long Line Applications, 38MAQ & 38MBQ Units:

1. No change in line sizing is required.
2. Add refrigerant per table below.

ADDITIONAL CHARGE TABLE

Unit Size	Total Line Length ft		Additional Charge, oz/ft. Ft (m)			
	Min	Max	10-25 (3-8)	>25-82 (8-25)	>82-98 (25-30)	>98-213 (30-65)
9	10	82	None	0.27		
12						
18		98		0.43	0.43	
24						
36		213				0.43
48						

WIRING

Recommended Connection Method for Power and Communication Wiring (To minimize communication wiring interference)

Power Wiring:

The main power is supplied to the outdoor unit. The field supplied connecting cable from the outdoor unit to indoor unit consists of three (3) wires and provides the power for the indoor unit. Two wires are high voltage AC power and one is a ground wire.

Consult your local building codes and the NEC (National Electrical Code) or CEC (Canadian Electrical Code) for special requirements.

All wires must be sized per NEC or CEC and local codes. Use Electrical Data table MCA (minimum circuit amps) and MOCP (maximum over current protection) to correctly size the wires and the disconnect fuse or breakers respectively.

Per caution note, only copper conductors with a minimum 300 volt rating and 2/64- inch thick insulation must be used.

Communication Wiring:

A separate shielded copper conductor only, with a minimum 300 volt rating and 2/64- inch thick insulation, must be used as the communication wire from the outdoor unit to the indoor unit.

To minimize voltage drop, the factory recommended wire size is 14/3 stranded with a ground. In special cases where there is high electrical interference, please use a separate shielded 16GA stranded control wire.

Alternate Connection Method for Power and Communication Wiring (May not prevent communication wiring interference)

The main power is supplied to the outdoor unit. The field supplied connecting cable from the outdoor unit to indoor unit consists of four (4) wires and provides the power and communication signals for the indoor unit. Two conductors are for power wiring (L1/L2, or L/N), one is a ground wire, and one is a DC communication wire.

Consult your local building codes and the NEC (National Electrical Code) or CEC (Canadian Electrical Code) for special requirements. All power wires must be sized per NEC or CEC and local codes. Use Electrical Data table MCA (minimum circuit amps) and MOCP (maximum over current protection) to correctly size the wires and the disconnect fuse or breakers respectively.

Per caution note, only copper conductors with a minimum 300 volt rating and 2/64- inch thick insulation must be used.

⚠ CAUTION

EQUIPMENT DAMAGE HAZARD

Failure to follow this caution may result in equipment damage or improper operation.

- Wires should be sized based on NEC and local codes.
- Use copper conductors only with a minimum 300 volt rating and 2/64 inch thick insulation.

⚠ CAUTION

EQUIPMENT DAMAGE HAZARD

Failure to follow this caution may result in equipment damage or improper operation.

- Be sure to comply with local codes while running wire from indoor unit to outdoor unit.
- Every wire must be connected firmly. Loose wiring may cause terminal to overheat or result in unit malfunction. A fire hazard may also exist. Therefore, be sure all wiring is tightly connected.
- No wire should be allowed to touch refrigerant tubing, compressor or any moving parts.
- Disconnecting means must be provided and shall be located within sight and readily accessible from the air conditioner.
- Connecting cable with conduit shall be routed through hole in the conduit panel.

The main power is supplied to the outdoor unit. The field supplied connecting cable from the outdoor unit to indoor unit consists of four wires and provides the power for the indoor unit as well as the communication signal between the outdoor unit and indoor unit. Two wires are high voltage AC power (L1 and L2), one is a ground wire, and one is a DC communication wire.

CONTROL SYSTEM

The 40MB*D unit is equipped with a microprocessor control to perform two functions:

1. Provide safety for the system
2. Control the system and provide optimum levels of comfort and efficiency

The main microprocessor is located on the control board of the fan coil unit (outdoor units have a microprocessor too) with thermistors located in the fan coil air inlet and on the indoor coil. Heat pump units have a thermistor on the outdoor coil. These thermistors monitor the system operation to maintain the unit within acceptable parameters and control the operating mode.

WIRELESS REMOTE CONTROL

Fig. 5 – Wireless remote control

1. A wireless remote control is supplied for system operation for system operation of all ducted units.
2. Each battery operated wireless (infrared) remote control may be used to control more than one unit.

WIRED REMOTE CONTROL

P/N KSACN0101CAC

1. Optional wired remote controller used for system operation of all ducted units.
2. Kit includes a wired remote controller and a connecting cable.
3. Connect with wire terminal between remote controller and indoor unit.
4. Display in °F or °C and temperature increments every 1°F or every 1°C.

AIR FLOW DATA

System size		9	12	18	24	36	48
Indoor (CFM)	High	380	380	480	810	1180	1470
	Medium	340	340	440	650	940	1180
	Low	290	290	400	590	680	940
Outdoor (CFM)		945	945	1050	1390	2940	4240

SOUND PRESSURE

System size		9	12	18	24	36	48
Cooling operation Indoor Sound Pressure	dBa (L/M/H)	30/33/36	30/34/38	34/37/38	43/45/48	46/50/52	41/44/46
Heating operation Indoor Sound Pressure	dBa (L/M/H)	30/33/36	30/34/38	34/37/39	44/45/48	46/49/51	40/43/45
Outdoor sound pressure level	dBa	55.5	56	59	62	65	65

SOUND POWER

System size		9	12	18	24	36	48
Cooling operation Indoor Sound Power	dBa (L/M/H)	39/42/45	39/43/47	43/46/48	53/55/58	56/60/62	51/54/56
Heating operation Indoor Sound Power	dBa (L/M/H)	39/42/45	39/43/47	43/46/48	54/55/58	56/59/61	50/53/55
Outdoor sound power level	dBa	65	66	69	72	75	75

ELECTRICAL DATA

UNIT SIZE	OPER. VOLTAGE MAX / MIN*	COMPRESSOR		OUTDOOR FAN				INDOOR FAN				MCA	MAX FUSE CB AMP
		V-PH-HZ	RLA	V-PH-HZ	FLA	HP	W	V-PH-HZ	FLA	HP	W		
9	253 / 187	208-230/1/60	5.3	208-230/1/60	3	0.053	40	208-230/1/60	1.03	0.07	55	15	15
12			5.7		3	0.053	40		1.03	0.07	55	15	15
18			7.3		3	0.067	50		0.83	0.12	90	15	20
24			8.8		3	0.16	120		0.83	0.12	90	15	25
36			13.5		3	0.16	120		1.263	0.2	150	30	50
48			13.4		3	0.11	85		2.23	0.32	240	35	55

*Permissible limits of the voltage range at which the unit will operate satisfactorily.

LEGEND

FLA - Full Load Amps

LRA - Locked Rotor Amps

MCA - Minimum Circuit Amps

RLA - Rated Load Amps

FAN AND MOTOR SPECIFICATIONS

System size			9	12	18	24	36	48
Indoor fan	material		ABS	ABS	ABS	ABS	ABS	ABS
	Type		LX-140*150*12-41J	LX-140*150*12-41J	LX-142*180*12-42J	LX-188*190*12-40J	LX-188*190*12-40J	LX-188*190*12-40J
	Diameter	inch	140	140	142	188	188	188
	Height	inch	150	150	180	190	490	490
Indoor fan motor	Model		WZDK55-38GS-W	WZDK55-38GS-W	WZDK90-38GS-W	WZDK90-38GS-W	WZDK150-38GS-W	WZDK240-38GS-W
	Type		DC	DC	DC	DC	DC	DC
	Phase		3	3	3	3	3	3
	FLA		1.03	1.03	0.83	0.83	1.263	2.23
	Insulation class		E	E	E	E	E	E
	Safe class		IPX0	IPX0	IPX0	IPX0	IPX0	IPX0
	Input	W	118	118	143	143	167	276
	Output	W	55	55	90	90	150	240
	Range of current	Amps	1.03±10%	1.03±10%	1.15±10%	1.15±10%	1.263±10%	2.23±10%
	Rated current	Amps	1.03	1.03	0.83	0.83	1.263	2.23
	Rated HP	HP	0.073	0.073	0.12	0.12	0.2	0.32
	Speed	rev/min	1100/950/800	1150/1000/900	1100/1050/880/820	1030/880/800	1120/1000/860	1040/950/830
	Rated RPM	rev/min	1450	1450	1200	1200	1180	1200
	Max. input	W	118	118	143	143	167	276
Outdoor fan	material		AS	AS	AS	AS	AS	AS
	Type		ZL-421*117*8-3K	ZL-421*117*8-3K	ZL-460*180*10-3N	ZL-560*139*12-3KN	ZL-560*139*12-3KN	ZL-525*135*12-3KFN
	Diameter	inch	421	421	460	560	560	525
	Height	inch	117	117	180	139	139	135
Outdoor fan motor	Model		WZDK40-38G-W-1	WZDK40-38G-W-1	ZKFN-50-8-2	WZDK120-38G-1	WZDK120-38G-W	WZDK85-38G
	Phase		DC	DC	DC	DC	DC	DC
	FLA		3	3	3	3	3	3
	Type		0.42	0.42	0.85	0.47	1.21	0.33
	Insulation class		E	E	E	E	E	E
	Safe class		IPX0	IPX0	IPX0	IPX0	IPX0	IPX0
	Input	W	46	46	103	145	150	98
	Output	W	40	40	50	120	120	85
	Range of current	Amps	0.42±10%	0.42±10%	0.85±10%	0.47±10%	1.21±10%	0.33±10%
	Rated current	Amps	0.42	0.42	0.85	0.47	1.21	0.33
	Rated HP	HP	0.053	0.053	0.067	0.16	0.16	0.11
	Speed	rev/min	800/700/600	800/700/600	800/700/600	850/750/700	950/850/750	950/850/750
	Rated RPM	rev/min	900	900	800	1050	1050	850
	Max. input	W	46	46	103	145	150	98

FAN PERFORMANCES

Static pressure curve (static pressure deducted)

Code	0	1	2	3	4	Max Static Pressure
Sizes 9 & 12	0.00	0.04	0.08	0.12	0.16	0.18
Sizes 18 & 24	0.04	0.10	0.16	0.22	0.28	0.40
Sizes 36 & 48	0.08	0.14	0.20	0.26	0.32	0.40
			Default Setting			

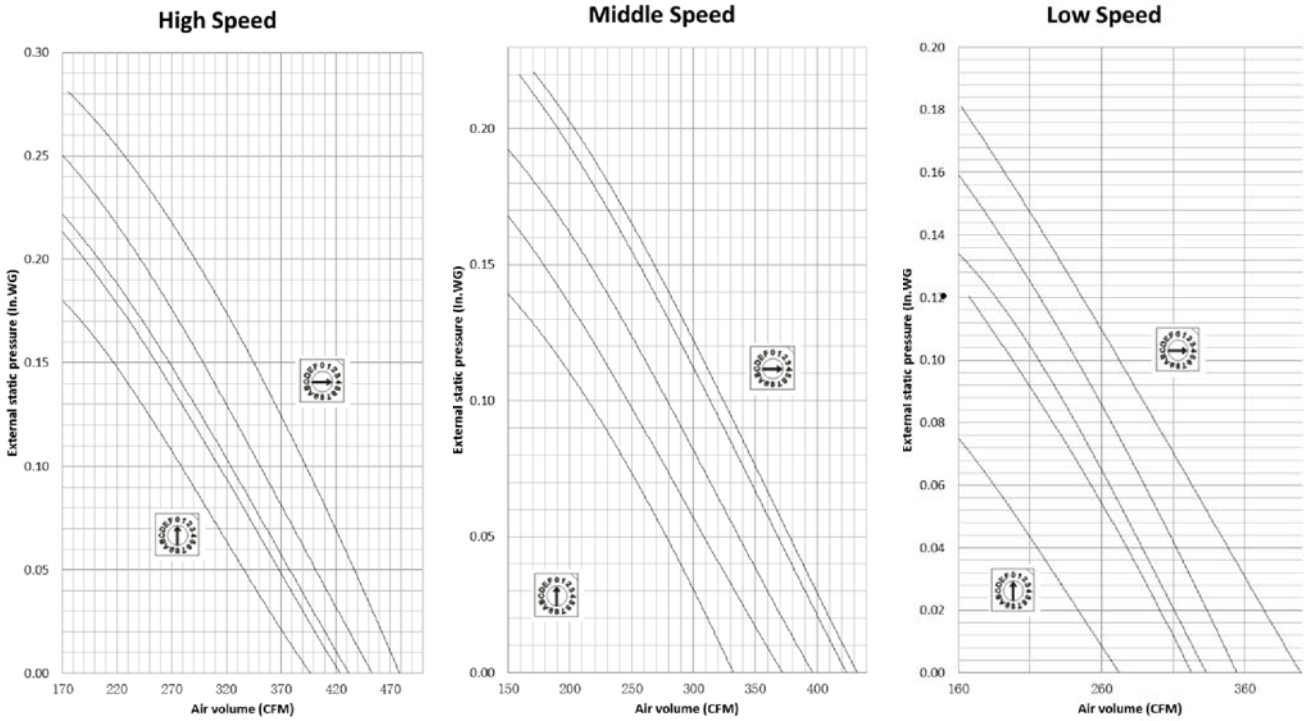

Fig. 6 – 9K and 12K

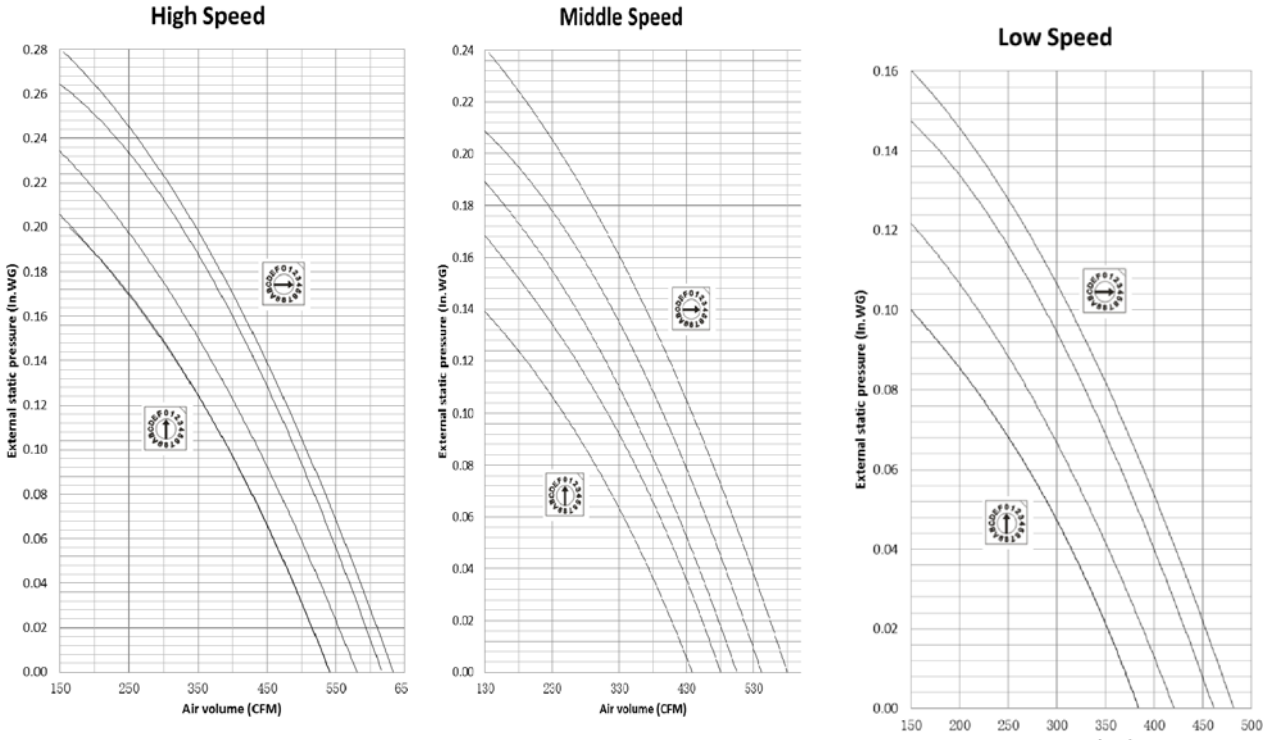

Fig. 7 – 18K

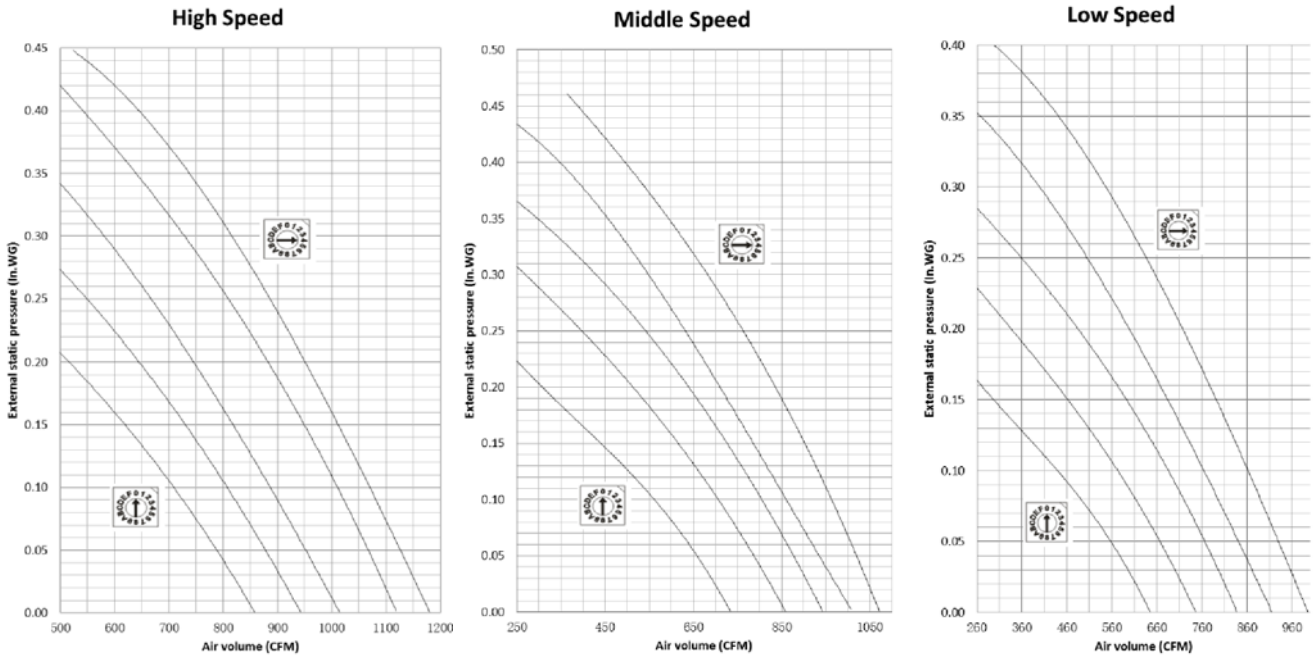

Fig. 8 – 24K

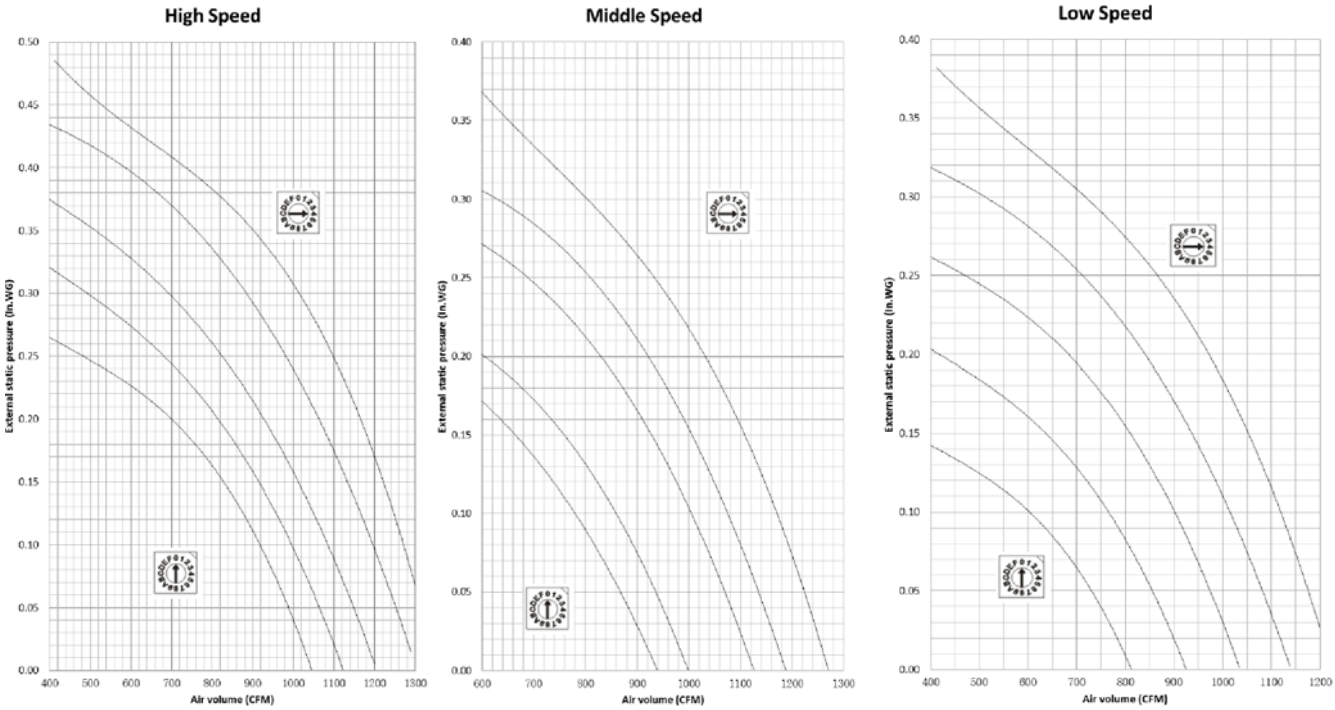

Fig. 9 – 36K

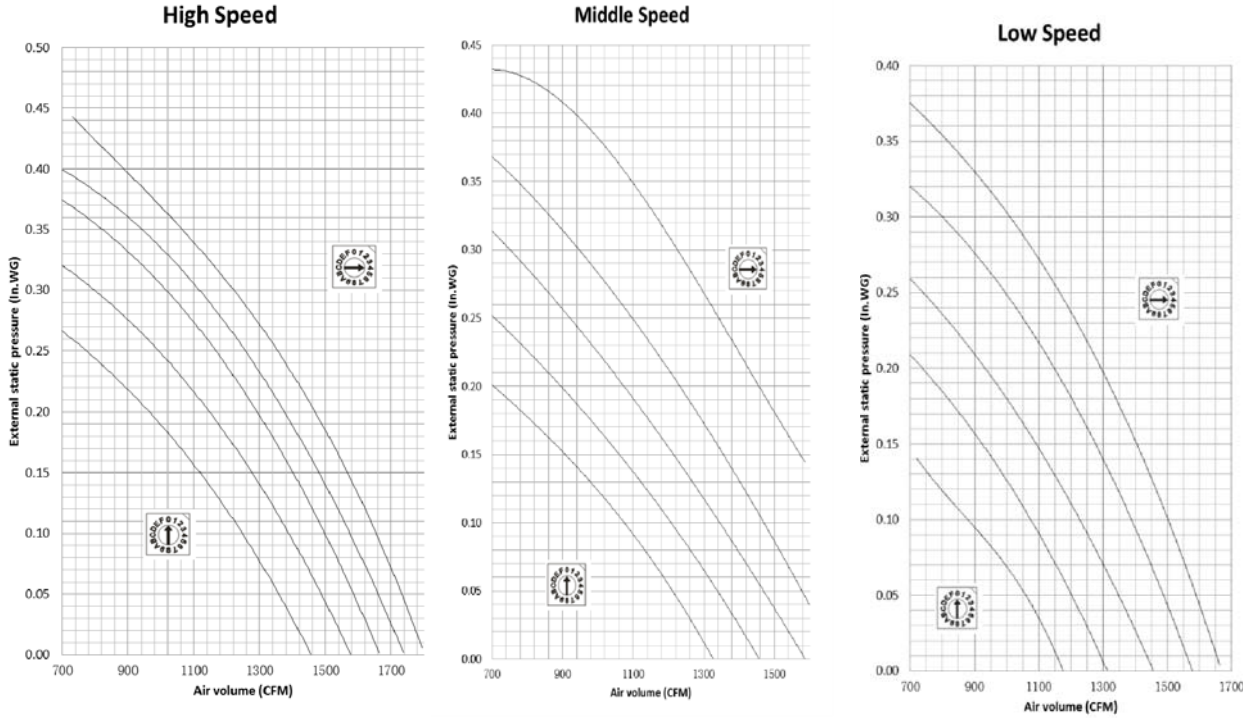

Fig. 10 – 48K

WIRING DIAGRAMS

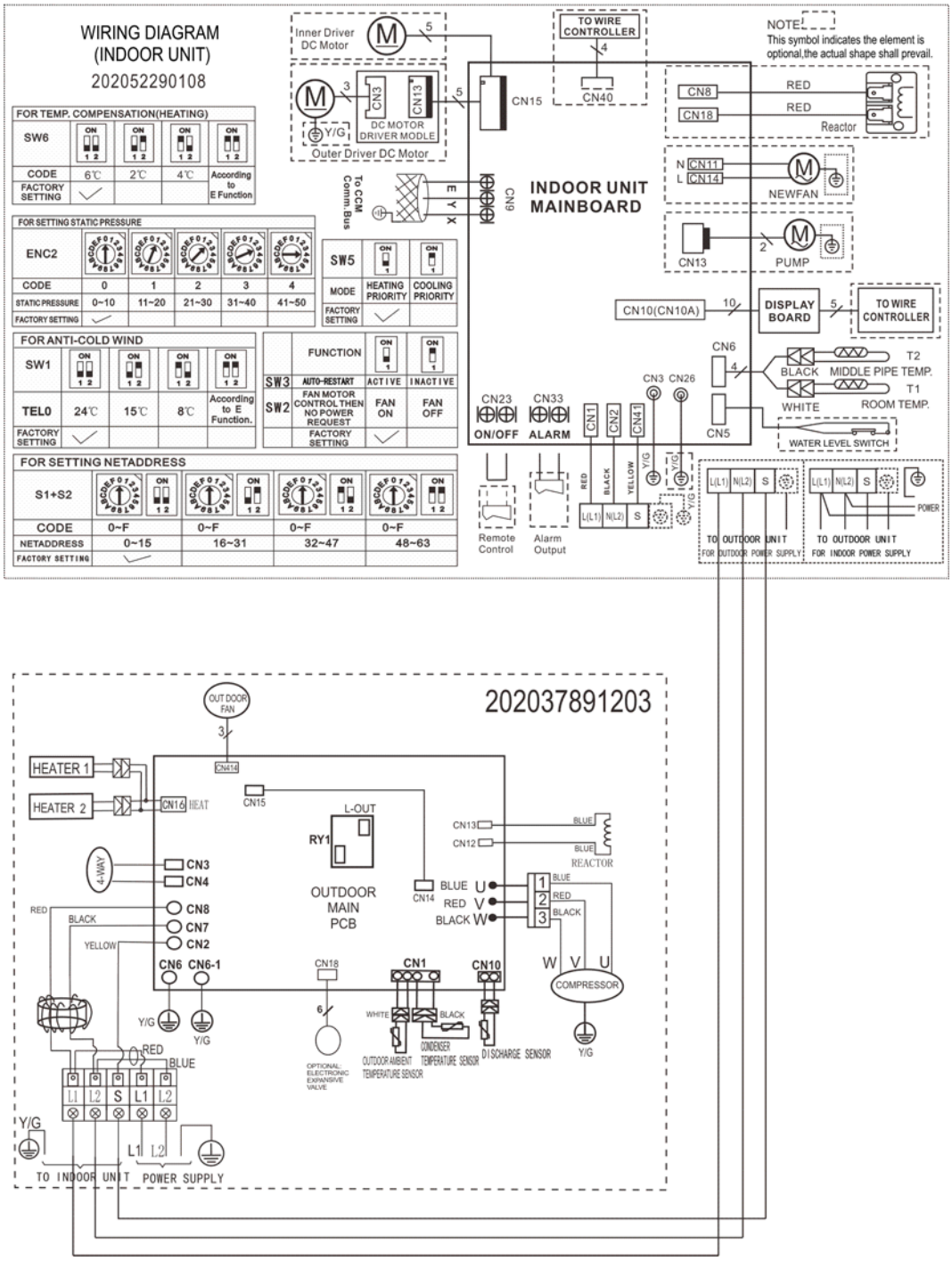

Fig. 11 – Wiring Diagram Sizes 09 - 12

Indoor unit		Outdoor unit	
CODE	**PART NAME**	**CODE**	**PART NAME**
CN1	Input: 230VAC High voltage Connection of the terminal	CN7、CN8	Input: 230V High voltage
CN2	Input: 230VAC High voltage Connection of the terminal	CN2	Output: Connection of the high voltage
CN3/CN26	Output: 0V Connection of the earth	CN3、CN4	Output: High voltage for 4-way control
CN5	Output: 0-5VDC Connection of the Water level switch	CN11、CN16	Output: 230V High voltage for HEATER
CN6	Output: 5VDC Connection of the Room and Pipe temperature	CN5	Output: Pulse(0-320V) for DC FAN
CN8/CN18	Output: 320VDC High voltage Connection of the Reactor	CN12、CN13	Output: Connection of the high voltage
CN9	Output: 5VDC Connection of the CCM	U V W	Output: Pulse(0-320V) for compressor
CN10(CN10A)	Output: 12VDC Connection of the Display board	CN10	Input:Pin1 (5V) Pin2(0-5V)
CN11/CN14	Output: 220VAC High voltage Connection of the New Fan	CN1	Input:Pin3-4 (5V) Pin2(0V),Pin1,Pin5(0-5V)
CN13	Output: 220VAC High voltage Connection of the Pump	CN18	Output:Pin 5&6 (12V) Pin1-Pin4:Pulse waveform,(0-12V)
CN15	Output: 320VDC High voltage Connection of the Fan board		
CN23	Output: 1-12VDC Connection of the Remote switch		
CN33	Output: 0V Connection of the Alarm		
CN40	Output: 12VDC Connection of the Wire controller		
CN41	Output: 24VDC Between CN2 Connection of the S signal		

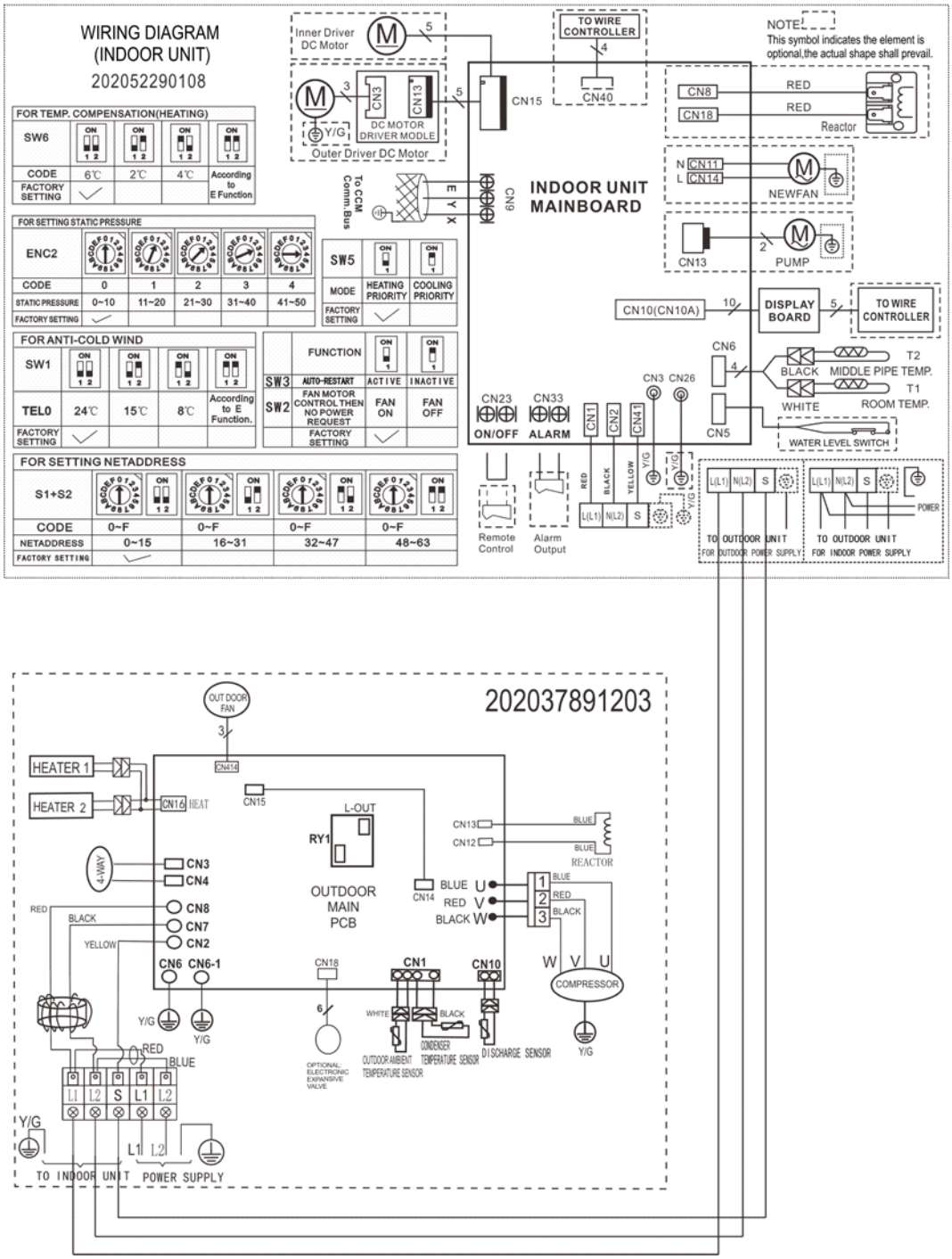

Fig. 12 – Wiring Diagram Size 18

Indoor unit		Outdoor unit	
CODE	**PART NAME**	**CODE**	**PART NAME**
CN1	Input: 230VAC High voltage Connection of the terminal	CN7、CN8	Input: 230V High voltage
CN2	Input: 230VAC High voltage Connection of the terminal	CN2	Output: Connection of the high voltage
CN3/CN26	Output: 0V Connection of the earth	CN3、CN4	Output: High voltage for 4-way control
CN5	Output: 0-5VDC Connection of the Water level switch	CN11、CN16	Output: 230V High voltage for HEATER
CN6	Output: 5VDC Connection of the Room and Pipe temperature	CN5	Output: Pulse(0-320V) for DC FAN
CN8/CN18	Output: 320VDC High voltage Connection of the Reactor	CN12、CN13	Output: Connection of the high voltage
CN9	Output: 5VDC Connection of the CCM	U V W	Output: Pulse(0-320V) for compressor
CN10(CN10A)	Output: 12VDC Connection of the Display board	CN10	Input:Pin1 (5V) Pin2(0-5V)
CN11/CN14	Output: 220VAC High voltage Connection of the New Fan	CN1	Input:Pin3-4 (5V) Pin2(0V),Pin1,Pin5(0-5V)
CN13	Output: 220VAC High voltage Connection of the Pump	CN18	Output:Pin5&6(12V) Pin1-Pin4:Pulse waveform,(0-12V)
CN15	Output: 320VDC High voltage Connection of the Fan board		
CN23	Output: 1-12VDC Connection of the Remote switch		
CN33	Output: 0V Connection of the Alarm		
CN40	Output: 12VDC Connection of the Wire controller		
CN41	Output: 24VDC Between CN2 Connection of the S signal		

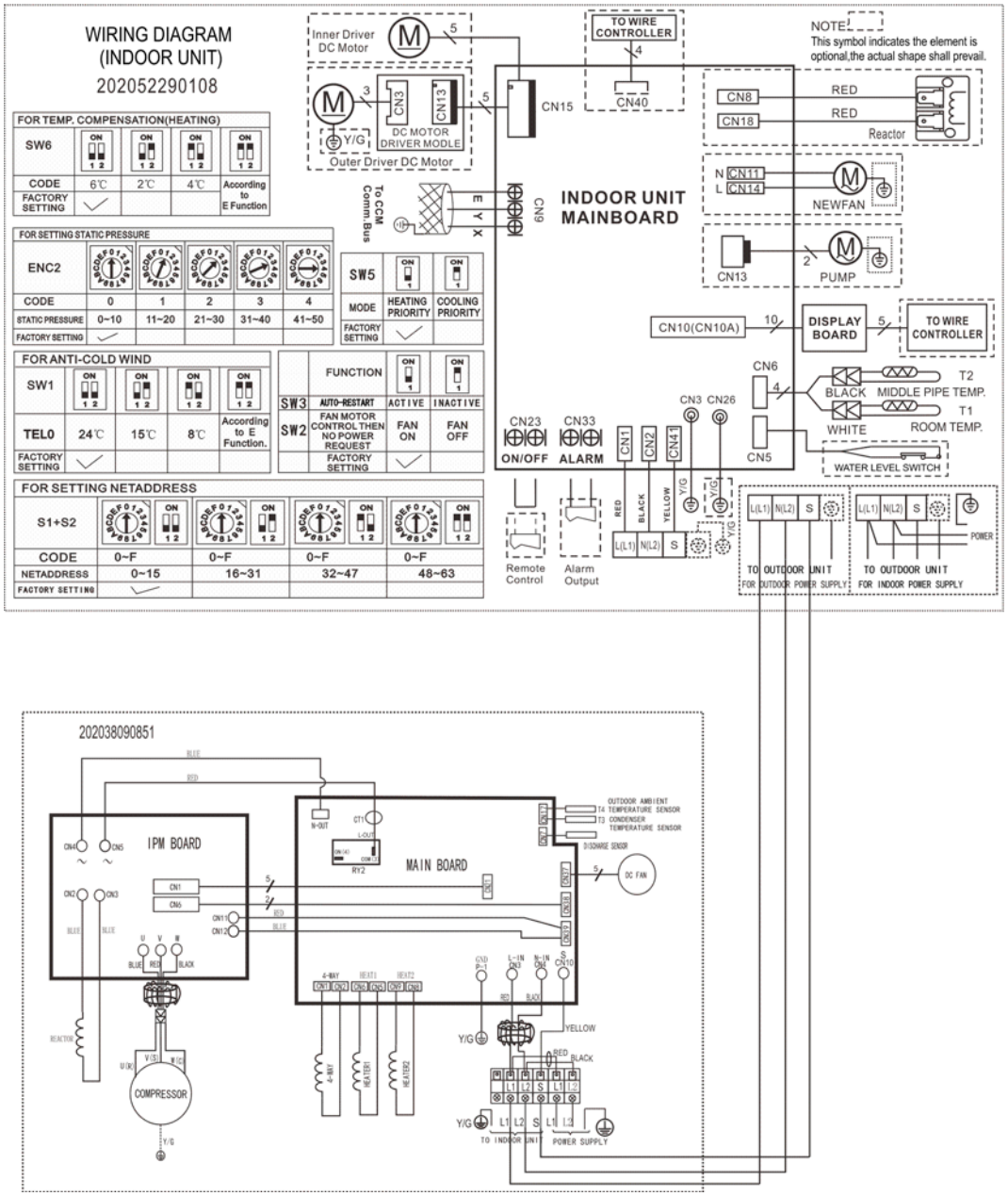

Fig. 13 – Wiring Diagram Size 24

Indoor unit		Outdoor unit	
CODE	**PART NAME**	**CODE**	**PART NAME**
CN1	Input: 230VAC High voltage Connection of the terminal	CN17	Input:Pin4-5 (3.3V) (T4) Pin2(0V),Pin1,Pin3(0-3.3V) (T3)
CN2	Input: 230VAC High voltage Connection of the terminal	CN7	Input:Pin1 (3.3V) Pin2(0-3.3V) (TP)
CN3/CN26	Output: 0V Connection of the earth	CN5,CN6	Output:230V High voltage for heater1 control
CN5	Output: 0-5VDC Connection of the Water level switch	CN8,CN9	Output:230V High voltage for heater2 control
CN6	Output: 5VDC Connection of the Room and Pipe temperature	CN2,CN3 (IPM BOARD)	Output: Connection of the high voltage (REACTOR)
CN8/CN18	Output: 320VDC High voltage Connection of the Reactor	CN3 (MAIN BOARD)	Input:230V High voltage (L)
CN9	Output: 5VDC Connection of the CCM	CN4	Input:230V High voltage (N)
CN10(CN10A)	Output: 12VDC Connection of the Display board	P-1	Connection to the earth (GND)
CN11/CN14	Output: 220VAC High voltage Connection of the New Fan	CN10	Output: Connection of the high voltage (S)
CN13	Output: 220VAC High voltage Connection of the Pump	CN1,CN2 (MAIN BOARD)	Output: High voltage for 4-way control
CN15	Output: 320VDC High voltage Connection of the Fan board	CN37	Output: Pulse(0-320V) for DC FAN
CN23	Output: 1-12VDC Connection of the Remote switch	U V W	Output: Pulse(0-320V) for COMPRESSORS
CN33	Output: 0V Connection of the Alarm		
CN40	Output: 12VDC Connection of the Wire controller		
CN41	Output: 24VDC Between CN2 Connection of the S signal		

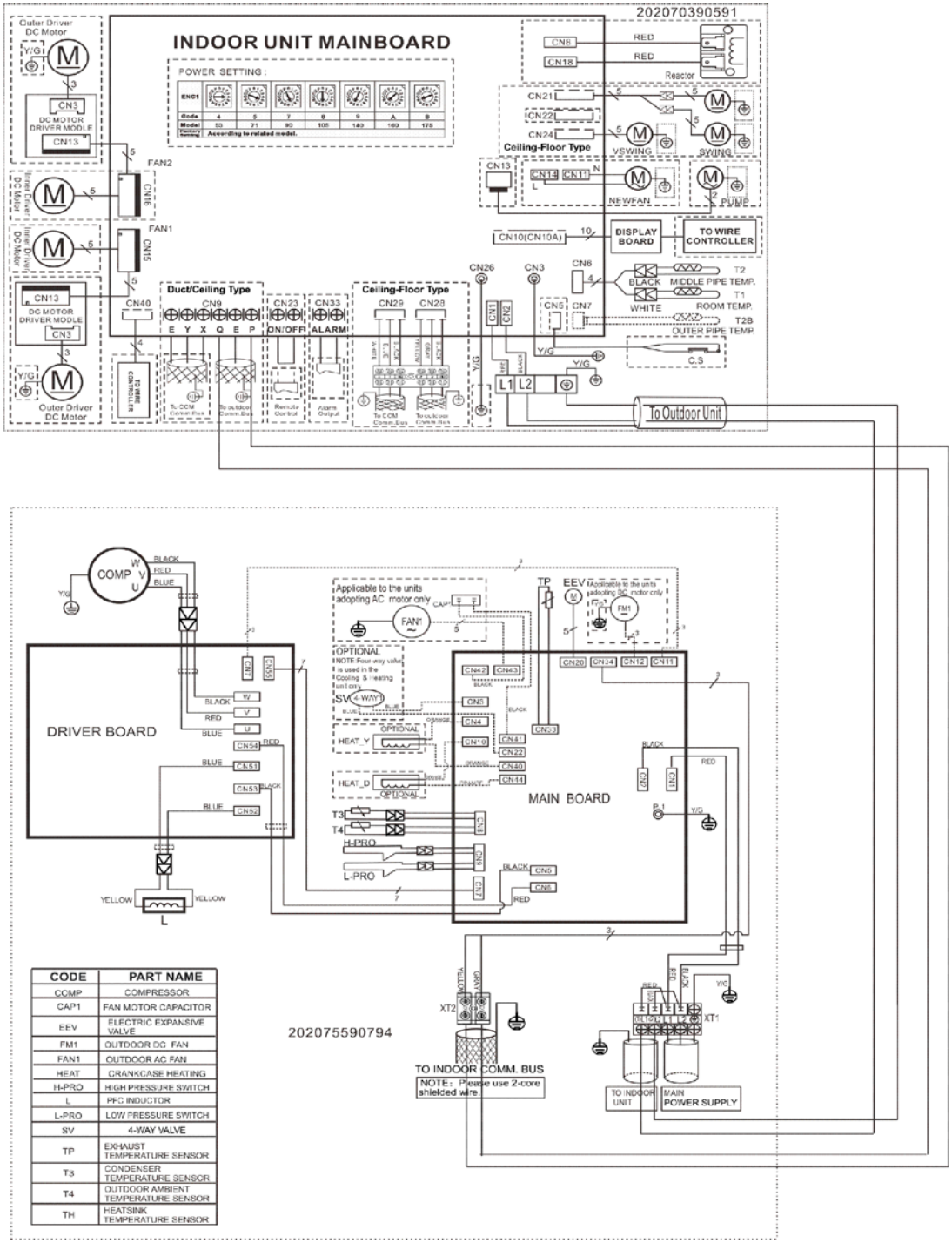

CODE	PART NAME
COMP	COMPRESSOR
CAP1	FAN MOTOR CAPACITOR
EEV	ELECTRIC EXPANSIVE VALVE
FM1	OUTDOOR DC FAN
FAN1	OUTDOOR AC FAN
HEAT	CRANKCASE HEATING
H-PRO	HIGH PRESSURE SWITCH
L	PFC INDUCTOR
L-PRO	LOW PRESSURE SWITCH
SV	4-WAY VALVE
TP	EXHAUST TEMPERATURE SENSOR
T3	CONDENSER TEMPERATURE SENSOR
T4	OUTDOOR AMBIENT TEMPERATURE SENSOR
TH	HEATSINK TEMPERATURE SENSOR

Fig. 14 – Wiring Diagram Size 36

Indoor unit		Outdoor unit(main board)	
CODE	**PART NAME**	**PART NAME**	**PART NAME**
CN1	Input: 230VAC High voltage Connection of the terminal	CN1,CN2	Power input: 230V AC
CN2	Input: 230VAC High voltage Connection of the terminal	CN3,CN22	Output: High voltage for 4-way control (230V AC)
CN3	Output: 0V Connection of the earth	CN4,CN40	Output: High voltage for HEAT_Y control(230V AC)
CN5	Output: 0-5VDC Connection of the Water level switch	CN5,CN6	Output: Power output to DRIVER BOARD (230V AC)
CN6	Output: 5VDC Connection of the Room and Pipe temperature	CN7	Input: Communication Main board and IPM Board,Pin1(12V DC),Pin2(5V DC)
CN7	Output: 5VDC Connection of the Outer Pipe temperature	CN8,CN33	Input: Temperature sensor (5V DC)
CN9	Output: 5VDC Connection of the CCM and RS-485	CN9	Input: Pressure test (5V DC)
CN10(CN10A)	Output: 12VDC Connection of the Display board	CN10,CN44	Output: High voltage for HEAT_D control (230V AC)
CN13	Output: 220VAC High voltage Connection of the Pump	CN11,CN12	Output: Pulse(0-380VDC) for DC FAN
CN15	Output: 320VDC High voltage Connection of the Fan board	CN20	Output: PMV control，Pin5(12V DC),Pin6(12V DC)
CN23	Output: 1-12VDC Connection of the Remote switch	CN34	Communication to indoor unit,Pin1(5V DC),Pin3(5V DC)
CN33	Output: 0V Connection of the Alarm	CN41,CN42,CN43	Output: Power output for AC fan motor (230V AC)
CN40	Output: 12VDC Connection of the Wire controller	P-1	Connection to the earth
		Outdoor unit(Driver board)	
		PART NAME	**PART NAME**
		U V W	Output: Pulse(0-380VDC) for COMPRESSOR
		CN7	Output: Pulse(0-380VDC) for DC FAN
		CN51,CN52	Output: Connect PFC Inductance, high DC Voltage
		CN53,CN54	Input: Power input for DRIVER BOARD (230V AC)
		CN55	Output: Communication IPM Board and Main board,Pin1(12V DC),Pin2(5V DC)

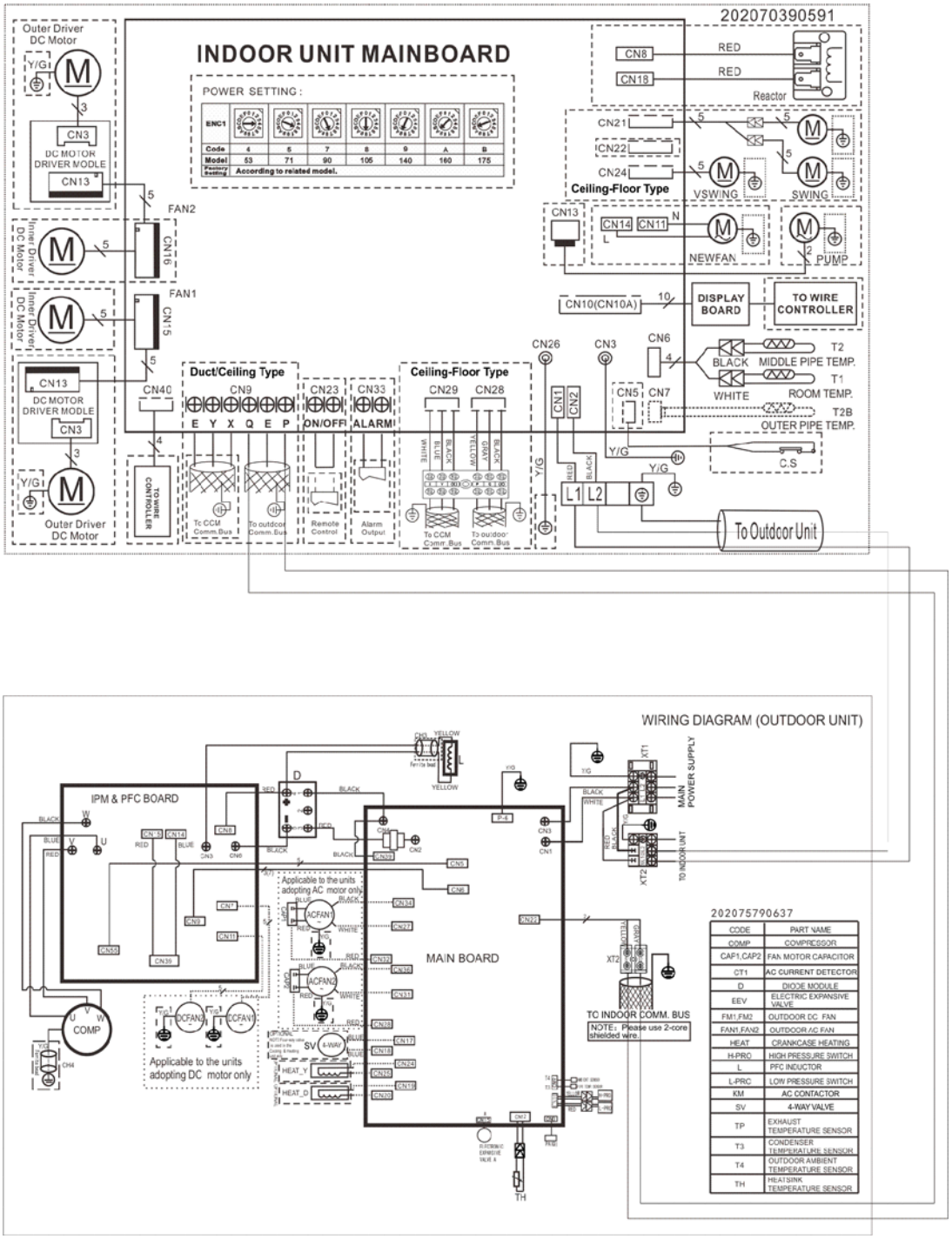

Fig. 15 – Wiring Diagram Size 48

CODE	PART NAME	Outdoor unit (main board)	
Indoor unit		CN1,CN3	Power input: 230V AC
CN1	Input: 230VAC High voltage Connection of the terminal	CN2,CN4	Output: Power output for DRIVER BOARD (230V AC)
CN2	Input: 230VAC High voltage Connection of the terminal	CN5	Input: Communication Main board and IPM Board, Pin1(5V DC)
CN3	Output: 0V Connection of the earth	CN6	Input: DC FAN motor1 and DC FAN motor2 control, (Pin7 5V DC)
CN5	Output: 0-5VDC Connection of the Water level switch	CN8,CN9,CN12	Input: Temperature sensor (5V DC)
CN6	Output: 5VDC Connection of the Room and Pipe temperature	CN10	Input: Pressure test (5V DC)
CN7	Output: 5VDC Connection of the Outer Pipe temperature	CN15	Output: PMV control，Pin5(12V DC),Pin6(12V DC)
CN9	Output: 5VDC Connection of the CCM and RS-485	CN17,CN18	Output: High voltage for 4-way(SV) control (230V AC)
CN10(CN10A)	Output: 12VDC Connection of the Display board	CN19,CN20	Output: High voltage for HEAT_D control (230V AC)
CN13	Output: 220VAC High voltage Connection of the Pump	CN22	Communication to indoor unit,Pin1(5V DC),Pin3(5V DC)
CN15	Output: 320VDC High voltage Connection of the Fan board	CN24,CN25	Output: High voltage for HEAT_Y control(230V AC)
CN23	Output: 1-12VDC Connection of the Remote switch	CN27、CN32、CN34，CN28、CN31、CN36	Output: Power output for AC FAN motor1 and AC FAN motor2 (230V AC)
CN33	Output: 0V Connection of the Alarm	CN39	Output: L2 for AC FAN、SV and HEAT ,High voltage (AC)
CN40	Output: 12VDC Connection of the Wire controller	P-6	Connection to the earth
		Outdoor unit (Driver board)	
		U V W	Output: Pulse(0-380VDC) for COMPRESSOR
		CN6 ,CN8	Input: Power input for DRIVER BOARD (200-320V DC)
		CN3	Output: Connect PFC Inductance, high DC voltage
		CN7,CN11	Output: DC FAN motor1 and DC FAN motor2 control (Pin1 310V or 380V DC)
		CN9	Output: Communication Main board and IPM Board Pin7(5V DC)
		CN55	Output: Communication IPM Board and Main board Pin1(12V DC)
		CN14、CN15-- CN39,	Output: High DC voltage (310V or 380V DC)

GUIDE SPECIFICATIONS

INDOOR CEILING-MOUNTED DUCTLESS UNITS

Size Range: 3/4 to 4 Ton Nominal Cooling and Heating Capacity

Carrier Model Number: 40MB*D

PART 1 - GENERAL

1.01 System Description

Indoor, ceiling-mounted, direct-expansion fan coils are matched with a heat pump outdoor unit.

1.02 Agency Listings

Unit shall be rated per AHRI Standards 210/240 and listed in the AHRI directory as a matched system.

1.03 Delivery, Storage, And Handling

Units shall be stored and handled per unit manufacturer's recommendations.

1.04 Warranty (For Inclusion By Specifying Engineer)

PART 2 - PRODUCTS

2.01 Equipment

A. General:

Indoor, direct-expansion, ceiling-mounted fan coil. Unit shall be complete with cooling/heating coil, fan, fan motor, piping connectors, electrical controls, microprocessor control system, and integral temperature sensing.

B. Unit Cabinet:

Unit cabinet shall be constructed of galvanized steel. Cabinet shall be fully insulated for improved thermal and acoustic performance.

C. Fans:

Fan shall be tangential direct-drive blower type with air intake at the rear or bottom of the unit and discharge at the front.

D. Coil:

Coil shall be copper tube with aluminum fins and galvanized steel tube sheets. Fins shall be bonded to the tubes by mechanical expansion. A drip pan under the coil shall have a factory installed condensate pump and drain connection for hose attachment to remove condensate.

E. Motors:

Motors shall be open drip-proof, permanently lubricated ball bearing with inherent overload protection. Fan motors shall be 3-speed.

F. Controls:

Controls shall consist of a microprocessor-based control system which shall control space temperature, determine optimum fan speed, and run self diagnostics. The temperature control range shall be from 62°F to 86°F (17°C to 30°C) in increments of 1°F or 1°C, and have 46°F Heating Mode (Heating Setback). The wireless remote controller shall have the ability to act as the temperature sensing location for room comfort.

The unit shall have the following functions as a minimum:

1. An automatic restart after power failure at the same operating conditions as at failure.
2. A timer function to provide a minimum 24-hour timer cycle for system Auto Start/Stop.
3. Temperature-sensing controls shall sense return air temperature.
4. Indoor coil freeze protection.
5. Wireless infrared remote control to enter set points and operating conditions.
6. Dehumidification mode shall provide increased latent removal capability by modulating system operation and set point temperature.
7. Fan-only operation to provide room air circulation when no cooling is required.
8. Diagnostics shall provide continuous checks of unit operation and warn of possible malfunctions. Error messages shall be displayed at the unit.
9. Fan speed control shall be user-selectable: high, medium, low, or microprocessor controlled automatic operation during all operating modes.
10. Automatic heating-to-cooling changeover in heat pump mode. Control shall include deadband to prevent rapid mode cycling between heating and cooling.
11. Indoor coil high temperature protection shall be provided to detect excessive indoor discharge temperature when unit is in heat pump mode.

G. Electrical Requirements:

Indoor fan motor to operate on 208-230V. Power is supplied from the outdoor unit.

H. Operating Characteristics:

The 40MBD system shall have a minimum SEER (Seasonal Energy Efficiency Ratio) and HSPF at AHRI conditions, as listed on the specifications table.

I. Refrigerant Lines:

All units should have refrigerant lines that can be oriented to connect from the side of the unit. Both refrigerant lines need to be insulated.

PART 1 - GENERAL

1.01 System Description

A. Outdoor air-cooled split system compressor sections suitable for on-the-ground, rooftop, wall hung or balcony mounting. Units shall consist of a rotary compressor, an air-cooled coil, propeller-type draw-through outdoor fan, reversing valve (HP), accumulator (HP units), metering device(s), and control box. Units shall discharge air horizontally as shown on the contract drawings. Units shall function as the outdoor component of an air-to-air heat pump system.

B. Units shall be used in a refrigeration circuit matched to ductless heat pump fan coil units.

1.02 Agency Listings

A. Unit construction shall comply with ANSI/ASHRAE 15, latest revision, and with the NEC.

B. Units shall be evaluated in accordance with UL standard 1995.

C. Units shall be listed in the CEC directory.

D. Unit cabinet shall be capable of withstanding 500-hour salt spray test per Federal Test Standard No. 141 (method 6061).

E. Air-cooled condenser coils shall be leak tested at 550 psig.

1.03 Delivery, Storage, And Handling

Units shall be shipped in one piece and shall be stored and handled per unit manufacturer's recommendations.

1.04 Warranty (For Inclusion By Specifying Engineer)

PART 2 - PRODUCTS

2.01 Equipment

A. General:

Factory assembled, single piece, air-cooled outdoor unit. Contained within the unit enclosure shall be all factory wiring, piping, controls, and the compressor.

B. Unit Cabinet:

1. Unit cabinet shall be constructed of galvanized steel, bonderized and coated with a baked-enamel finish on inside and outside.
2. Unit access panels shall be removable with minimal screws and shall provide full access to the compressor, fan, and control components.
3. Outdoor compartment shall be isolated and have an acoustic lining to assure quiet operation.

C. Fans:

1. Outdoor fans shall be direct-drive propeller type, and shall discharge air horizontally. Fans shall draw air through the outdoor coil.
2. Outdoor fan motors shall be totally-enclosed, single phase motors with class B insulation and permanently-lubricated ball bearings. Motor shall be protected by internal thermal overload protection.
3. Shaft shall have inherent corrosion resistance.
4. Fan blades shall be non metallic and shall be statically and dynamically balanced.
5. Outdoor fan openings shall be equipped with PVC metal/mesh coated protection grille over fan.

D. Compressor:

1. Compressor shall be fully hermetic rotary type.
2. Compressor shall be equipped with oil system, operating oil charge, and motor. Internal overloads shall protect the compressor from over-temperature and over-current.
3. Motor shall be NEMA rated class F, suitable for operation in a refrigerant atmosphere.
4. Compressor assembly shall be installed on rubber vibration isolators.
5. Compressors shall be single phase.

E. Outdoor Coil:

Coil shall be constructed of aluminum fins mechanically bonded to seamless copper tubes, which are cleaned, dehydrated, and sealed.

F. Refrigeration Components:

Refrigerant circuit components shall include brass external liquid line service valve with service gage port connections, suction line service valve with service gage connection port, service gage port connections on compressor suction and discharge lines with Schrader type fittings with brass caps, accumulator, reversing valve.

G. Controls and Safeties:

Operating controls and safeties shall be factory selected, assembled, and tested. The minimum control functions shall include the following:

1. Controls:
   a. A time delay control sequence is provided standard through the fan coil board.
   b. Automatic outdoor-fan motor protection.
2. Safeties:
   a. System diagnostics.
   b. Compressor motor current and temperature overload protection.
   c. Outdoor fan failure protection.

H. Electrical Requirements:

1. Unit shall operate 208-230v.
2. Unit electrical power shall be a single point connection.
3. Unit Control voltage to the indoor fan coil shall be 0-15V DC.
4. All power and control wiring must be installed per NEC and all local electrical codes.
5. Unit shall have high- and low-voltage terminal block connections.

Copyright 2015 Carrier Corp. ● 7310 W. Morris St. ● Indianapolis, IN 46231
Edition Date: 05/15
Catalog No: 38- 40MBD- 02PD

Manufacturer reserves the right to change, at any time, specifications and designs without notice and without obligations.
Replaces: 38- 40MBD- 01PD