45MBAAQ
Air Handler Unit Ductless System
Sizes 18K - 60K

Installation Instructions

Fig. 1 — 45MBAA Unit Sizes 18K - 60K

NOTE: Read the entire instruction manual before starting the installation. Images are for illustration purposes only. Actual models may differ slightly.

TABLE OF CONTENTS

PAGE

SAFETY CONSIDERATIONS....2
ACCESSORIES....11
MODEL NUMBERS....11
DIMENSIONS....12
ELECTRICAL DATA....12
INSTALLATION....13
Step 1 - Check Equipment....13
Step 2 - Mount Unit....13
Step 3 - Mount Positions....14
Step 4 - Select Installation Location....15
Step 5 - Preparation and Precaution for Installation....16
Step 6 - Connecting the Wire and Pipes....19
Step 7 - Refrigerant Piping....24
REFRIGERANT PIPING CONNECTION....26
AIR-HANDLER REFRIGERANT PIPING CONNECTION....27
CONNECTION DIAGRAM....28
WIRING DIAGRAMS....30
WIRELESS REMOTE CONTROLLER INSTALLATION....33
OPTIONAL WIRED WALL-MOUNTED REMOTE CONTROL INSTALLATION....34
SETTING UP AIRFLOW AND STATIC PRESSURE....35
FAN PERFORMANCE....36
TROUBLESHOOTING....46
DUCTLESS START-UP CHECKLIST - Single Zone....49

SAFETY CONSIDERATIONS

Installing, starting up, and servicing air- conditioning equipment can be hazardous due to system pressures, electrical components, and equipment location (roofs, elevated structures, etc.).
Only trained, qualified installers and service mechanics should install, start- up, and service this equipment.

Untrained personnel can perform basic maintenance functions such as coil cleaning. All other operations should be performed by trained service personnel only.

When working on the equipment, observe the precautions in the literature and on tags, stickers, and labels attached to the equipment.

Follow all safety codes.Wear safety glasses and work gloves. Keep a quenching cloth and a fire extinguisher nearby when brazing. Use care in handling, rigging, and setting bulky equipment.
Read these instructions thoroughly and follow all warnings or cautions included in the literature and attached to the unit. Consult local building codes and National Electrical Code (NEC) for special requirements.
Recognize safety information.

This is the safety - alert symbol ⚠.

When you see this symbol on the unit and in instructions or manuals, be alert to the potential for personal injury. Understand these signal words: **DANGER**, **WARNING**, and **CAUTION**. These words are used with the safety- alert symbol.

DANGER identifies the most serious hazards which will result in severe personal injury or death.

WARNING signifies hazards which could result in personal injury or death.

CAUTION is used to identify unsafe practices which may result in minor personal injury or product and property damage.

NOTE is used to highlight suggestions which will result in enhanced installation, reliability, or operation.

⚠ WARNING

ELECTRICAL SHOCK HAZARD
Failure to follow this warning could result in personal injury or death.

Before installing, modifying, or servicing system, the main electrical disconnect switch must be in the **OFF** position. There may be more than 1 disconnect switch. Lock out and tag switch with a suitable warning label.

⚠ WARNING

EXPLOSION HAZARD
Failure to follow this warning could result in death, serious personal injury, and/or property damage.

Never use air or gases containing oxygen for leak testing or operating refrigerant compressors. Pressurized mixtures of air or gases containing oxygen can lead to an explosion.

⚠ CAUTION

EQUIPMENT DAMAGE HAZARD

Failure to follow this caution may result in equipment damage or improper operation.

Do not bury more than 36 in. (914 mm) of refrigerant pipe in the ground. If any section of pipe is buried, there must be a 6 in. (152 mm) vertical rise to the valve connections on the outdoor units. If more than the recommended length is buried, refrigerant may migrate to the cooler buried section during extended periods of system shutdown. This causes refrigerant slugging and could possibly damage the compressor at start-up.

⚠ WARNING

This appliance is not intended for use by persons (including children) with reduced physical, sensory or mental capabilities, or lack of experience and knowledge, unless they have been given supervision or instruction concerning use of the appliance by a person responsible for their safety. Children should be supervised to ensure that they do not play with the appliance.

⚠ WARNING

Only use the specified wire. If the wire is damaged, it must be replaced by the manufacturer, its service agent or similarly qualified persons in order to avoid a hazard. The product must be properly grounded at the time of installation, or electric shock may occur.

For all electrical work, follow all local and national wiring standards, regulations, and the Installation Manual. Connect the cables tightly, and clamp them securely to prevent external forces from damaging the terminal. Improper electrical connections can overheat and cause fire, and may also cause shock. All electrical connections must be made according to the Electrical Connection Diagram located on the panels of the indoor and outdoor units.

All wiring must be properly arranged to ensure that the control board cover can close properly. If the control board cover is not closed properly, it can lead to corrosion and cause the connection points on the terminal to heat up, catch fire, or cause electrical shock.

Disconnection must be incorporated in the fixed wiring in accordance with NEC, CSA and Local Codes. **Do not** share the electrical outlet with other appliances. Improper or insufficient power supply can cause fire or electric shock.

If connecting power to fixed wiring, an all-pole disconnection device which has at least 3mm clearances in all poles, and have a leakage current that may exceed 10mA, the residual current device (RCD) having a rated residual operating current not exceeding 30mA, and disconnection must be incorporated in the fixed wiring in accordance with NEC, CSA and Local Codes.

⚠ WARNING

Turn off the air conditioner and disconnect the power before performing any installation or repairing. Failure to do so can cause electric shock.

Installation must be performed by an authorized dealer or specialist. Defective installation can cause water leakage, electrical shock, or fire. Installation must be performed according to the installation instructions.

Improper installation can cause water leakage, electrical shock, or fire. Contact an authorized service technician for repair or maintenance of this unit. This appliance shall be installed in accordance with national wiring regulations.

Only use the included accessories, parts, and specified parts for installation. Using non-standard parts can cause water leakage, electrical shock, fire, and can cause the unit to fail.

Install the unit in a firm location that can support the unit's weight. If the chosen location cannot support the unit's weight, or the installation is not done properly, the unit may drop and cause serious injury and damage. Install drainage piping according to the instructions in this manual. Improper drainage may cause water damage to your home and property. For units that have an auxiliary electric heater, do not install the unit within 3 feet (1 meter) of any combustible materials.

If combustible gas accumulates around the unit, it may cause fire.

Do not turn on the power until all work has been completed.

When moving or relocating the air conditioner, consult experienced service technicians for disconnection and re-installation of the unit.

Read the information for details in "indoor unit installation" and "outdoor unit installation" sections.

NOTE: The air conditioner's circuit board (PCB) is designed with a fuse to provide overcurrent protection. The specifications of the fuse are printed on the circuit board, for example: T3.15AL/250VAC, T5AL/250VAC, T3.15A/250VAC, T5A/250VAC, T20A/250VAC, T30A/250VAC,etc.

NOTE: Only a blast-proof ceramic fuse can be used.

⚠ WARNING

FOR FLAMMABLE REFRIGERANTS

Do not use means to accelerate the defrosting process or to clean, other than those recommended by the manufacturer.

The appliance shall be stored in a room without continuously operating ignition sources (for example: open flames, an operating gas appliance or an operating electric heater).

Do not pierce or burn. Be aware that refrigerants may not contain an odor.

⚠ WARNING

PERSONAL INJURY AND PROPERTY DAMAGE HAZARD

For continued performance, reliability, and safety, the only approved accessories and replacement parts are those specified by the equipment manufacturer. The use of non-manufacturer approved parts and accessories could invalidate the equipment limited warranty and result in a fire risk, equipment malfunction, and failure.

Review the manufacturer's instructions and replacement parts catalogs available from your equipment supplier.

Table 1 — Symbols displayed on the indoor unit or outdoor unit

A2L	WARNING	This symbol shows that this appliance used a flammable refrigerant. If the refrigerant is leaked and exposed to an external ignition source, there is a risk of fire.
	CAUTION	This symbol shows that the operation manual should be read carefully.
	CAUTION	This symbol shows that a service personnel should be handling this equipment with reference to the installation manual.
	CAUTION	
	CAUTION	This symbol shows that information is available such as the operating manual or installation manual.

Table 2 — A (min)

		Ho, release height ft (m)					
MC or Mrel Refrigerant Charge Amount pounds (kilograms)	Mc or Mrel (lbs(kgs)	≤ 7.2 (2.2)	7.5 (2.3)	7.9 (2.4)	8.5 (2.6)	9.2 (2.8)	9.8 (3.0)
	≤ 3.91 (1.776)	12 (1.10)					
	4.0 (1.8)	60 (5.53)	57 (5.29)	55 (5.07)	50 (4.68)	47 (4.34)	44 (4.05)
	4.4 (2.0)	66 (6.14)	63 (5.88)	61 (5.63)	56 (5.2)	52 (4.83)	48 (4.5)
	4.9 (2.2)	73 (6.76)	70 (6.46)	67 (6.19)	62 (5.72)	57 (5.31)	53 (4.95)
	5.3 (2.4)	79 (7.37)	76 (7.05)	73 (6.76)	67 (6.24)	62 (5.79)	58 (5.41)
	5.7 (2.6)	86 (7.99)	82 (7.64)	79 (7.32)	73 (6.76)	68 (6.27)	63 (5.86)
	6.2 (2.8)	93 (8.6)	89 (8.23)	85 (7.88)	78 (7.28)	73 (6.76)	68 (6.31)
	6.6 (3.0)	99 (9.21)	95 (8.81)	91 (8.45)	84 (7.8)	78 (7.24)	73 (6.76)
	7.1 (3.2)	106 (9.83)	101 (9.4)	97 (9.01)	90 (8.32)	83 (7.72)	78 (7.21)
	7.5 (3.4)	112 (10.44)	108 (9.99)	103 (9.57)	95 (8.84)	88 (8.2)	82 (7.66)
	7.9 (3.6)	119 (11.06)	114 (10.58)	109 (10.14)	101 (9.36)	94 (8.69)	87 (8.11)
	8.4 (3.8)	126 (11.67)	120 (11.16)	115 (10.7)	106 (9.88)	99 (9.17)	92 (8.56)
	8.8 (4.0)	132 (12.29)	126 (11.75)	121 (11.26)	112 (10.4)	104 (9.65)	97 (9.01)
	9.3 (4.2)	139 (12.9)	133 (12.34)	127 (11.82)	117 (10.91)	109 (10.14)	102 (9.46)
	9.7 (4.4)	145 (13.51)	139 (12.93)	133 (12.39)	123 (11.43)	114 (10.62)	107 (9.91)
	10.1 (4.6)	152 (14.13)	145 (13.51)	139 (12.95)	129 (11.95)	119 (11.1)	112 (10.36)
	10.6 (4.8)	159 (14.74)	152 (14.1)	145 (13.51)	134 (12.47)	125 (11.58)	116 (10.81)
	11 (5.0)	165 (15.36)	158 (14.69)	152 (14.08)	140 (12.99)	130 (12.07)	121 (11.26)
	11.5 (5.2)	172 (15.97)	164 (15.28)	158 (14.64)	145 (13.51)	135 (12.55)	126 (11.71)
	11.9 (5.4)	179 (16.58)	171 (15.86)	164 (15.2)	151 (14.03)	140 (13.03)	131 (12.16)
	12.3 (5.6)	185 (17.2)	177 (16.45)	170 (15.77)	157 (14.55)	145 (13.51)	136 (12.61)
	12.8 (5.8)	192 (17.81)	183 (17.04)	176 (16.33)	162 (15.07)	151 (14)	141 (13.06)
	13.2 (6.0)	198 (18.43)	190 (17.63)	182 (16.89)	168 (15.59)	156 (14.48)	145 (13.51)
	13.7 (6.2)	205 (19.04)	196 (18.21)	188 (17.45)	173 (16.11)	161 (14.96)	150 (13.96)
	14.1 (6.4)	212 (19.66)	202 (18.8)	194 (18.02)	179 (16.63)	166 (15.44)	155 (14.41)
	14.6 (6.6)	218 (20.27)	209 (19.39)	200 (18.58)	185 (17.15)	171 (15.93)	160 (14.86)
	15 (6.8)	225 (20.88)	215 (19.98)	206 (19.14)	190 (17.67)	177 (16.41)	165 (15.32)
	15.4 (7.0)	231 (21.5)	221 (20.56)	212 (19.71)	196 (18.19)	182 (16.89)	170 (15.77)
	15.9 (7.2)	238 (22.11)	228 (21.15)	218 (20.27)	201 (18.71)	187 (17.37)	175 (16.22)
	Amin (ft2 (m2) Mc - Actual refrigerant charge in the system lbs (Kg) Mrel - Refrigerant releasable charge lbs (kg) Ho - Release height, measured from duct opening, in ft (m) Hinst - Height of install, from the bottom of the indoor appliance, measured in ft (m) Ho ≈ Hinst Warning: Minimum room area of conditioned space is based on releasable charge or total system refrigerant charge.					

Room Size Restriction

The appliances are connected via an air duct system to one or more rooms, the bottom of the air outlet of the air duct in the room should be at a height.7.3ft/2.2m from the floor. In UL/CSA 60335-2-40, the R454B refrigerant belongs to mildly flammable refrigerants, which will limit the room area of the system service. Similarly, the total amount of refrigerant in the system should be less than or equal to the maximum allowable refrigerant charge, which depends on the room area serviced by the system.

Table 3 — Refrigerant Leak

MODEL	18K	24K	30	36K	48K	60K
Nominal Air Volume	400CFM	400CFM	447CFM	541CFM	706CFM	795CFM

⚠ WARNING

FOR FLAMMABLE REFRIGERANTS

Do not use means to accelerate the defrosting process or to clean, other than those recommended by the manufacturer.

The appliance shall be stored in a room without continuously operating ignition sources (for example: open flames, an operating gas appliance or an operating electric heater).

Do not pierce or burn. Be aware that refrigerants may not contain an odor.

The room area of operating or storage should be as specified in Table 2 on page 4.

Warning For Flammable Refrigerant

1. Installation (Space)
   - That the installation of pipe-work shall be kept to a minimum.
   - That pipe-work shall be protected from physical damage.
   - Where refrigerant pipes shall be compliance with national gas regulations.
   - That mechanical connections shall be accessible for maintenance purposes.
   - In cases that require mechanical ventilation, ventilation openings shall be kept clear of obstruction.
   - When disposing of the product is used, be based on national regulations, properly processed.
2. Servicing
   - Any person who is involved with working on or breaking into a refrigerant circuit should hold a current valid certificate from an industry-accredited assessment authority, which authorities their competence to handle refrigerants safely in accordance with an industry recognized assessment specification.
3. Maintenance and repair requiring the assistance of other skilled personnel shall be carried out under the supervision of the person competent in the use of flammable refrigerants.
4. Do not use any means to accelerate the defrosting process or to clean, other than those recommended by the manufacturer.
5. The appliance shall be stored in a room without continuously operating ignition sources (for example: open flames, an operating gas appliance or an operating electric heater).
6. Be more careful that foreign matter (oil, water, etc) does not enter the piping. Also, when storing the piping, securely seal the opening by pinching, taping, etc.
7. Do not pierce or burn.
8. Be aware that refrigerants may not contain an odor.
9. All working procedure that affects safety means shall only be carried by competent persons.
10. Appliance shall be stored in a well ventilated area where the room size corresponds to the room area as specific for operation.
11. The appliance shall be stored so as to prevent mechanical damage from occurring.
12. Joints shall be tested with detection equipment with a capability of 5 g/year of refrigerant or better, with the equipment in standstill and under operation or under a pressure of at least these standstill or operation conditions after installation. Detachable joints shall NOT be used in the indoor side of the unit (brazed, welded joint could be used).

NOTE ON FUSE SPECIFICATIONS

- The air conditioner's circuit board (PCB) may be designed with a fuse to provide overcurrent protection. This fuse must be replaces with identical component.
- The specifications of the fuse, if equipped, are printed on the circuit board, examples of such are T5A/250VAC and T10A/250VAC.

NOTE: FLUORINATED GASSES (NOT APPLICABLE TO THE UNIT USING R290 REFRIGERANT)

- This air-conditioning unit contains fluorinated greenhouse gases. For specific information on the type of gas and the amount, please refer to the relevant label on the unit itself or the "Owner's Manual - Product Fiche " in the packaging of the outdoor unit. (European Union products only).
- Installation, service, maintenance and repair of this unit must be performed by a certified technician.
- Product un-installation and recycling must be performed by a certified technician.
- When the unit is checked for leaks, proper record-keeping of all checks is strongly recommended.

The allowed static pressure range of the air conditioner on site is 0-0.80 in.wc.(0-200 Pa). The data in Table 4 represents the static pressures at full required air flow used for AHRI testing.

Table 4 — Pressure

MODEL	18-24K	30-36K	48-60K
Pressure (After January 1, 2023	0.5 in.wc.(125Pa)	0.5 in.wc.(125Pa)	0.5 in.wc.(125Pa)

NOTE: The maximum functional total external static pressure can not exceed 0.80 in.wc. or 200 Pa. The airflow reduces significantly beyond 0.80 in.wc. or 200Pa. System design should allow for the increased resistance of filters as they become dirty.

COMPATIBILITY

Table 5 — Compatibility

		MULTIZONE HEAT PUMP OUTDOOR UNIT							
Indoor Unit		37MGRAQ18CA3	37MGHAQ18CA3	37MGRAQ24DA3	37MGHAQ24DA3	37MGRAQ30EA3	37MGHAQ30EA3	37MGHAQ48FA3	37MGHAQ55FA3
						37MGRAQ36EA3	37MGHAQ36EA3	37MGRAQ48FA3	37MGRAQ55FA3
Air Handler	45MBAAQ18XB3		•	•	•	•	•	•	•
	45MBAAQ24XB3		•	•	•	•	•	•	•
	45MBAAQ30XB3				•	•	•	•	•
	45MBAAQ36XB3						•	•	•

Table 6 — Compatibility

		SINGLE ZONE HEAT PUMP OUTDOOR UNIT							
Indoor Unit		37MAHAQ18AA3	37MAHAQ24AA3	-	37MAHAQ33AA3	-	37MBHAQ36AA3	37MBHAQ48AA3	37MBHAQ58AA3
		37MARAQ18AA3	37MARAQ24AA3	37MARAQ30AA3	-	37MARAQ36AA3	37MBRAQ36AA3	37MBRAQ48AA3	37MBRAQ58AA3
Air Handler	45MBAAQ18XB3	•							
	45MBAAQ24XB3		•						
	45MBAAQ30XB3			•					
	45MBAAQ36XB3				•	•			
	45MBAAQ36XA3						•		
	45MBAAQ48XA3							•	
	45MBAAQ60XA3								•

1. **Installation** (where refrigerant pipes are allowed)
   Any person who is involved with working on or breaking into a refrigerant circuit should hold a current valid certificate from an industry-accredited assessment authority, which authorizes their competence to handle refrigerants safely in accordance with an industry recognized assessment specification.
   Maintenance and repair requiring the assistance of other skilled personnel shall be carried out under the supervision of the person competent in the use of flammable refrigerants.
   That the installation of pipe-work shall be kept to a minimum.
   That pipe-work shall be protected from physical damage.
   Where refrigerant pipes shall be compliance with national gas regulations.
   That mechanical connections shall be accessible for maintenance purposes.
   Be more careful that foreign matter (oil, water, etc) does not enter the piping.
   Also, when storing the piping, securely seal the opening by pinching, taping, etc.
   All working procedure that affects safety means shall only be carried by competent persons.
   Appliance shall be stored in a well ventilated area where the room size corresponds to the room area as specified for operation.
   Joints shall be tested with detection equipment with a capability of 5 g/year of refrigerant or better, with the equipment in standstill and under operation or under a pressure of at least these standstill or operation conditions after installation. Detachable joints shall NOT be used in the indoor side of the unit (brazed, welded joint could be used). In cases that require mechanical ventilation, ventilation openings shall be kept clear of obstruction.

   LEAK DETECTION SYSTEM installed. Unit must be powered except for service. For the unit with refrigerant sensor, when the refrigerant sensor detects refrigerant leakage, the indoor unit will display a error code and emit a buzzing sound, the compressor of outdoor unit will immediately stop, and the indoor fan will start running. The service life of the refrigerant sensor is 15 years. When the refrigerant sensor malfunctions, the indoor unit will display the error code “FHCC”.
   The refrigerant sensor can not be repaired and can only be replaced by the manufacturer. It shall only be replaced with the sensor specified by the manufacturer.

2. **When a FLAMMABLE REFRIGERANT is used,** the requirements for installation space of appliance and/or ventilation requirements are determined according to

   - the mass charge amount (M) used in the appliance, the installation location, the type of ventilation of the location or of the appliance. piping material, pipe routing, and installation shall include protection from physical damage in operation and service, and be in compliance with national and local codes and standards, such as ASHRAE 15, IAPMO Uniform Mechanical Code, ICC International Mechanical Code, or CSA B52. All field joints shall be accessible for inspection prior to being covered or enclosed.
   that protection devices, piping, and fittings shall be protected as far as possible against adverse environmental affects, for example, the danger of water collecting and freezing in relief pipes or the accumulation of dirt and debris;
   - that piping in refrigeration systems shall be so designed and installed to minimize the likelihood of hydraulic shock damaging the system;
   - that steel pipes and components shall be protected against corrosion with a rustproof coating before applying any insulation;
   - that precautions shall be taken to avoid excessive vibration or pulsation;
   the minimum floor area of the room shall be mentioned in the form of a table or a single figure without reference to a formula; after completion of field piping for split systems, the field pipework shall be pressure tested with an inert gas and then vacuum tested prior to refrigerant charging, according to the following requirements:
   a. The minimum test pressure for the low side of the system shall be the low side design pressure and the minimum test pressure for the high side of the system shall be the high side design pressure, unless the high side of the system cannot be isolated from the low side of the system in which case the entire system shall be pressure tested to the low side design pressure.
   b. The test pressure after removal of pressure source shall be maintained for at least 1 h with no decrease of pressure indicated by the test gauge, with test gauge resolution not exceeding 5% of the test pressure.
   c. During the evacuation test, after achieving a vacuum level specified in the manual or less, the refrigeration system shall be isolated from the vacuum pump and the pressure shall not rise above 1500 microns within 10 min. The vacuum pressure level shall be specified in the manual, and shall be the lessor of 500 microns or the value required for compliance with national and local codes and standards, which may vary between residential, commercial, and industrial buildings.
   - field-made refrigerant joints indoors shall be tightness tested according to the following requirements: The test method shall have a sensitivity of 5 grams per year of refrigerant or better under a pressure of at least 0.25 times the maximum allowable pressure. No leak shall be detected.

3. Qualification of Workers
   Any maintenance, service and repair operations must be required qualification of the working personnel. Every working procedure that affects safety means shall only be carried out by competent persons that joined the training and achieved competence should be documented by a certificate. The training of these procedures is carried out by national training organizations or manufacturers that are accredited to teach the relevant national competency standards that may be set in legislation. All training shall follow the ANNEX HH requirements of UL 60335-2-40 4th Edition.
   Examples for such working procedures are:
   • breaking into the refrigerating circuit;
   • opening of sealed components;
   • opening of ventilated enclosures.

4. Checks to the area
   Prior to beginning work on systems containing flammable refrigerants, safety checks are necessary to ensure that the risk of ignition is minimized. For repair to the refrigerating system, the following precautions shall be complied with prior to conducting work on the system.

5. Work procedure
   Works shall be undertaken under a controlled procedure so as to minimize the risk of a flammable gas or vapor being present while the work is being performed.

6. General work area
   All maintenance staff and others working in the local area shall be instructed on the nature of work being carried out. work in confined spaces shall be avoided.

7. Checking for presence of refrigerant

   The area shall be checked with an appropriate refrigerant detector prior to and during work, to ensure the technician is aware of potentially flammable atmospheres. Ensure that the leak detection equipment being used is suitable for use with flammable refrigerants, i.e. no sparking, adequately sealed or intrinsically safe.

8. Presence of fire extinguisher

   If any hot work is to be conducted on the refrigeration equipment or any associated parts, appropriate fire extinguishing equipment shall be available to hand. Have a dry power or CO2 fire extinguisher adjacent to the charging area.

9. No ignition sources

   No person carrying out work in relation to a REFRIGERATING SYSTEM which involves exposing any pipe work shall use any sources of ignition in such a manner that it may lead to the risk of fire or explosion. All possible ignition sources, including cigarette smoking, should be kept sufficiently far away from the site of installation, repairing, removing and disposal, during which refrigerant can possibly be released to the surrounding space. Prior to work taking place, the area around the equipment is to be surveyed to make sure that there are no flammable hazards or ignition risks. "No Smoking" signs shall be displayed.

10. Ventilated area

    Ensure that the area is in the open or that it adequately ventilated before breaking into the system or conducting any hot work. A degree of ventilation shall continue during the period that the work is carried out. The ventilation should safely disperse any released refrigerant and preferably expel it externally into the atmosphere.

11. Checks to the refrigeration equipment

    Where electrical components are being changed, they shall be fit for the purpose and to the correct specification. At all times the manufacturer's maintenance and service guidelines shall be followed. If in doubt consult the manufacturer's technical department for assistance. The following checks shall be applied to installations using FLAMMABLE REFRIGERANTS:

    a. the actual refrigerant charge is in accordance with the room size within which the refrigerant containing parts are installed;
    b. the ventilation machinery and outlets are operating adequately and are not obstructed;
    c. if an indirect refrigerating circuit is being used, the secondary circuits shall be checked for the presence of refrigerant; marking to the equipment continues to be visible and legible, marking and signs that are illegible shall be corrected;
    d. refrigeration pipe or components are installed in a position where they are unlikely to be exposed to any substance which may corrode refrigerant containing components, unless the components are constructed of materials which are inherently resistant to being corroded or are suitably protected against being so corroded.

12. Checks to electrical devices

    Repair and maintenance to electrical components shall include initial safety checks and component inspection procedures. If a fault exists that could compromise safety, then no electrical supply shall be connected to the circuit until it is satisfactorily dealt with. If the fault cannot be corrected immediately but it is necessary to continue operation, and adequate temporary solution shall be used. This shall be reported to the owner of the equipment so all parties are advised.
    Initial safety checks shall include:
    - that capacitors are discharged: this shall be done in a safe manner to avoid possibility of sparking
    - that there no live electrical components and wiring are exposed while charging,
    - recovering or purging the system; that there is continuity of earth bonding.

13. Wiring

    Check that wiring will not be subject to wear, corrosion, excessive pressure, vibration, sharp edges or any other adverse environmental affects. The check shall also take into account the affects of aging or continual vibration from sources such as compressors or fans.

14. Detection of flammable refrigerants

    Under no circumstances shall potential sources of ignition be used in the searching for or detection of refrigerant leaks. A halide torch (or any other detector using a naked flame) shall not be used. The following leak detection methods are deemed acceptable for refrigerant systems. Electronic leak detectors may be used to detect refrigerant leaks but, in the case of FLAMMABLE REFRIGERANTS, the sensitivity may not be adequate, or may need re-calibration. (Detection equipment shall be calibrated in a refrigerant free area.) Ensure that the detector is not a potential source of ignition and is suitable for the refrigerant used. Leak detection equipment shall be set at a percentage of the LFL of the refrigerant and shall be calibrated to the refrigerant employed, and the appropriate percentage of gas (25% maximum) is confirmed. Leak detection fluids are also suitable for use with most refrigerants but the use of detergents containing chlorine shall be avoided as the chlorine may react with the refrigerant and corrode the copper pipe-work.

NOTE: Examples of leak detection fluids are: bubble method:

If a leak is suspected, all naked flames shall be removed/extinguished. If a leakage of refrigerant is found which requires brazing, all of the refrigerant shall be recovered from the system, or isolated (by means of shut off valves) in a part of the system remote from the leak. See the following instructions of removal of refrigerant.

NOTE: Cylinders shall be kept upright for storage.

15. Removal and evacuation

When breaking into the refrigerant circuit to make repairs - or for any other purpose conventional procedures shall be used. However, for flammable refrigerants it is important that best practice be followed, since flammability is a consideration.
The following procedure shall be adhered to:
safely remove refrigerant following local and national regulations; evacuate;
purge the circuit with inert gas (optional for A2L);
evacuate (optional for A2L);
continuously flush or purge with inert gas when using flame to open circuit; and open the circuit.
The refrigerant charge shall be recovered into the correct recovery cylinders if venting is not allowed by local and national codes. For appliances containing flammable refrigerants, the system shall be purged with oxygen-free nitrogen to render the appliance safe for flammable refrigerants. This process might need to be repeated several times. Compressed air or oxygen shall not be used for purging
refrigerant systems.
For appliances containing flammable refrigerants, refrigerants purging shall be achieved by breaking the vacuum in the system with oxygen-free nitrogen and continuing to fill until the working pressure is achieved, then venting to atmosphere, and finally pulling down to a vacuum (optional for A2L). This process shall be repeated until no refrigerant is within the system (optional for A2L). When the final oxygen-free nitrogen charge is used, the system shall be vented down to atmospheric pressure to enable work to take place.
The outlet for the vacuum pump shall not be close to any potential ignition sources, and ventilation shall be available.

16. Charging procedures

In addition to conventional charging procedures, the following requirements shall be followed:
Works shall be undertaken with appropriate tools only (In case of uncertainty, please consult the manufacturer of the tools for use with flammable refrigerants)
Ensure that contamination of different refrigerants does not occur when using charging equipment. Hoses or lines shall be as short as possible to minimize the amount of refrigerant contained in them. Cylinders shall be kept upright.
Ensure that the refrigeration system is earthed prior to charging the system with refrigerant.
Label the system when charging is complete (if not already).
Extreme care shall be taken not to overfill the refrigeration system. Prior to recharging the system it shall be pressure tested with oxygen free nitrogen (OFN). The system shall be leak tested on completion of charging but prior to commissioning. A follow up leak test shall be carried out prior to leaving the site.

17. Decommissioning

Before carrying out this procedure, it is essential that the technician is completely familiar with the equipment and all its detail. It is recommended good practice that all refrigerants are recovered safely. Prior to the task being carried out, an oil and refrigerant sample shall be taken in case analysis is required prior to re-use of recovered refrigerant. It is essential that electrical power is available before the task is commenced.

a. Become familiar with the equipment and its operation.
b. Isolate system electrically
c. Before attempting the procedure ensure that:

- mechanical handling equipment is available, if required, for handling refrigerant cylinders;
- all personal protective equipment is available and being used correctly;
- the recovery process is supervised at all times by a competent person;
- recovery equipment and cylinders conform to the appropriate standards.

d. Pump down refrigerant system, if possible.
e. If a vacuum is not possible, make a manifold so that refrigerant can be removed from various parts of the system.
f. Make sure that cylinder is situated on the scales before recovery takes place.
g. Start the recovery machine and operate in accordance with instructions.
h. Do not overfill cylinders (no more than 80% volume liquid charge)
i. Do not exceed the maximum working pressure of the cylinder, even temporarily.
j. When the cylinders have been filled correctly and the process completed, make sure that the cylinders and the equipment are removed from site promptly and all isolation valves on the equipment are closed off.
k. Recovered refrigerant shall not be charged into another refrigeration system unless it has been cleaned and checked.

18. Labeling

Equipment shall be labeled stating that it has been de-commissioned and emptied of refrigerant. The label shall be dated and signed. For appliances containing FLAMMABLE REFRIGERANTS, ensure that there are labels on the equipment stating the equipment contains FLAMMABLE REFRIGERANT.

19. Recovery

When removing refrigerant from a system, either for servicing or decommissioning, it is recommended good practice that all refrigerants are removed safely.
When transferring refrigerant into cylinders, ensure that only appropriate refrigerant recovery cylinders are employed. Ensure that the correct number of cylinders for holding the total system charge is available. All cylinders to be used are designated for the recovered refrigerant and labeled for that refrigerant (i. e. special cylinders for the recovery of refrigerant). Cylinders shall be complete with pressure-relief valve and associated shut-o valves in good working order. Empty recovery cylinders are evacuated and, if possible, cooled before recovery occurs.
The recovery equipment shall be in good working order with a set of instructions concerning the equipment that is at hand and shall be suitable for the recovery of the flammable refrigerant. If in doubt, the manufacturer should be consulted. In addition, a set of calibrated weighing scales shall be available and in good working order. Hoses shall be complete with leak-free disconnect couplings and in good condition.
The recovered refrigerant shall be processed according to local legislation in the correct recovery cylinder, and the relevant waste transfer note arranged. Do not mix refrigerants in recovery units and especially not in cylinders. If compressors or compressor oils are to be removed, ensure that they have been evacuated to an acceptable level to make certain that flammable refrigerant does not remain within the lubricant. The compressor body shall not be heated by an open flame or other ignition sources to accelerate this process. When oil is drained from a system, it shall be carried out safely.

20. Unventilated Areas

An unventilated area where the appliance using FLAMMABLE REFRIGERANTS is installed shall be so constructed that should any refrigerant leak, it will not stagnate so as to create a fire or explosion hazard.

If appliances connected via an air duct system to one or more rooms with A2L REFRIGERANTS are installed in a room with an area less than Amin, that room shall be without continuously operating open flames (e.g. an operating gas appliance) or other POTENTIAL IGNITION SOURCES (for e.g. an operating electric heater, hot surfaces). A flame-producing device may be installed in the same space if the device is provided with an effective flame arrest.

Auxiliary devices which may be a POTENTIAL IGNITION SOURCE shall not be installed in the duct work. Examples of such POTENTIAL IGNITION SOURCES are hot surfaces with a temperature exceeding 700 °C and electric switching devices.

Only auxiliary devices (such as certificated heater kit) approved by the appliance manufacturer or declared suitable with the refrigerant shall be installed in connecting ductwork.

For duct connected appliances, false ceilings or drop ceilings may be used as a return air plenum if a REFRIGERANT DETECTION SYSTEM is provided in the appliance and any external connections are also provided with a sensor immediately below the return air plenum duct joint. - REFRIGERANT SENSORS for REFRIGERANT DETECTION SYSTEMS Shall Only be replaced with sensors specified by the appliance manufacture. - LEAK DETECTION SYSTEM installed. Unit must be powered except for service.

21. Transportation, marking and storage for units that employ flammable refrigerants

a. General

The following information is provided for units that employ FLAMMABLE REFRIGERANTS.

b. Transport of equipment containing flammable refrigerants. Attention is drawn to the fact that additional transportation regulations may exist with respect to equipment containing flammable gas. The maximum number of pieces of equipment or the configuration of the equipment permitted to be transported together will be determined by the applicable transport regulations.

c. Marking of equipment using signs. Signs for similar appliances used in a work area are generally addressed by local regulations and give the minimum requirements for the provision of safety and/or health signs for a work location. All required signs are to be maintained and employers should ensure that employees receive suitable and sufficient instruction and training on the meaning of appropriate safety signs and the actions that need to be taken in connection with these signs. The effectiveness of signs should not be diminished by too many signs being placed together. Any pictograms used should be as simple as possible and contain only essential details.

d. Disposal of equipment using flammable refrigerants. See national regulations.

e. Storage of equipment/appliances. The storage of the appliance should be in accordance with the applicable regulations or instructions, whichever is more stringent.

f. Storage of packed (unsold) equipment. Storage package protection should be constructed in such a way that mechanical damage to the equipment inside the package will not cause a leak of the REFRIGERANT CHARGE. The maximum number of pieces of equipment permitted to be stored together will be determined by local regulations.

ACCESSORIES

The system is shipped with the following accessories. Use all of the installation parts and accessories to install the system. Improper installation may result in water leakage, electrical shock and fire, or cause the equipment to fail. Keep the installation manual in a safe place and do not discard any other accessories until the installation has been completed.

Table 7 — Accessories

NAME	SHAPE	QUANTITY
Manual		2
Cable ties		4
Insulation Sleeve	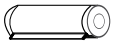	2
Flare Nut		2
Flare Adapter*		2
Remote Controller		1
Batteries		2
Wired remote controller (purchased separately)	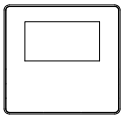	1
ACCESSORIES (PACKED WITH THE OUTDOOR UNIT)		
NAME	**SHAPE**	**QUANTITIY**
Drain Joint [(packed with outdoor unit)	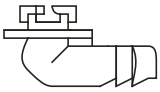	1
Seal Ring* [(packed with outdoor unit)		1

NOTE: Flare adapter only for 30K and 36K units.

NOTE: Seal ring is not available for the outdoor unit with dimensions 38-19/32in*38-3/8in*16-11/32(16-1/10)in).*

Table 8 — Optional Accessories

MODEL NUMBERS	DESCRIPTION
KSACN1201AAA	Non-Programmable Wired Controller
KSACN1401AAA	Programmable Wired Controller with Built in Wi-Fi

MODEL NUMBERS

Table 9 — Model Numbers

RESIDENTIAL				LIGHT COMMERCIAL		
18K	**24K**	**30K**	**36K**	**36K**	**48K**	**60K**
45MBAAQ18XB3	45MBAAQ24XB3	45MBAAQ30XB3	45MBAAQ36XB3	45MBAAQ36XA3	45MBAAQ48XA3	45MBAAQ60XA3

DIMENSIONS

Table 10 — Dimensions

MODEL (BTU/H) / DIMENSIONS		18K/24K	30K/36K	48K/60K
A	inch	45	49	53
	mm	1143	1245	1346
B	inch	21	21	21
	mm	533	533	533
C	inch	17-1/2	21-1/50	24-1/2
	mm	445	534	622
D	inch	15-3/4	19-5/16	22-27/32
	mm	400	490	580
E	inch	10-1/4	10-1/4	10-1/4
	mm	260	260	260

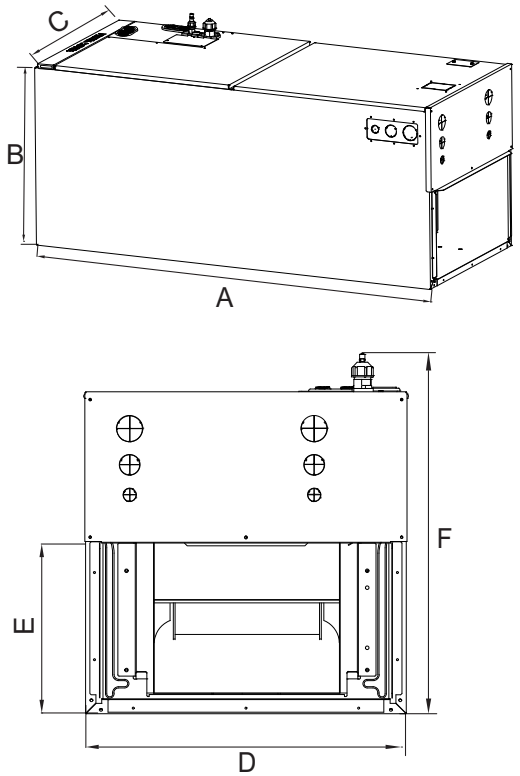

Fig. 2 — Dimensions

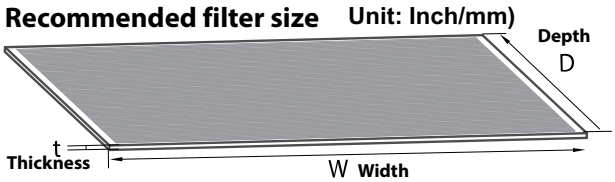

Fig. 3 — Filter

Table 11 — Recommended Filter Sizes

MODEL (BTU/H)	WIDTH		DEPTH		THICKNESS	
	Inch	mm	Inch	mm	Inch	mm
18K-24K	16	406.4	20	508	1	25.4
30K-48K	19-1/2	495.3	20	508	1	25.4
60K	23	584.2	20	508	1	25.4

NOTE: The user needs to purchase a standard filter that meets the requirements of UL900. For questions about the selection of filters, consult the manufacturer.

ELECTRICAL DATA

Table 12 — Electrical Data

		RESIDENTIAL				LIGHT COMMERCIAL		
INDOOR UNIT		**18K**	**24K**	**30K**	**36K(XB3)**	**36K(XA3)**	**48K**	**60K**
V-PH-HZ		**(208/230V)**	**(208/230V)**	**(208/230V)**	**(208/230V)**	**(208/230V)**	**(208/230V)**	**(208/230V)**
Minimum Circuit Ampacity (MCA)	A	3	4	6	6	6	9.75	11
MOP	A	15	15	15	15	15	15	15
Voltage – Phase-Frequency		208/230-1-60						
Max – Min Voltage Range		253-187						

LEGEND
FLA - Full Load Amps
MCA - Minimum Circuit Amps
MOP- Maximum Overcurrent Protection

Outdoor Units: These units can connect with: Residential, and Light Commercial units.

INSTALLATION

Step 1 - Check Equipment

Unpack the unit and move to the final location. Remove the carton, taking care not to damage the unit. Inspect the equipment for damage prior to installation. File a claim with the shipping company if the shipment is damaged or incomplete. Locate the unit rating plate, which contains the proper installation information. Check the rating plate to be sure the unit matches the job specifications.

The indoor unit should be installed in a location that meets the following requirements:

- **Enough room for installation and maintenance**
- **Enough room for the line-set and drainpipe**
- **A structure that can sustain the weight of the indoor unit**
- **The air inlet and outlet are not impeded**
- **There is no direct radiation from heaters**

CAUTION

DO NOT install the unit in the following locations:

- Areas with oil drilling or fracking
- Coastal areas with high salt content in the air
- Areas with caustic gases in the air, such as near hot springs
- Areas with power fluctuations, such as factories
- Enclosed spaces, such as cabinets
- Areas with strong electromagnetic waves
- Areas that store flammable materials or gas
- Rooms with high humidity, such as bathrooms or laundry rooms.

Step 2 - Mount Unit

The unit can stand or lie on the floor, or hang from a ceiling or a wall. Allow space for wiring, piping, and servicing the unit.

IMPORTANT: When the unit is installed over a finished ceiling and/or living area, building codes may require a field-supplied secondary condensate pan to be installed under the entire unit.

Some localities may allow as an alternative, the running of a separate, secondary condensate line. Consult the local codes for additional restrictions or precautions.

NOTE: Nuisance sweating may occur if the unit is installed in a high humidity environment with low airflow.

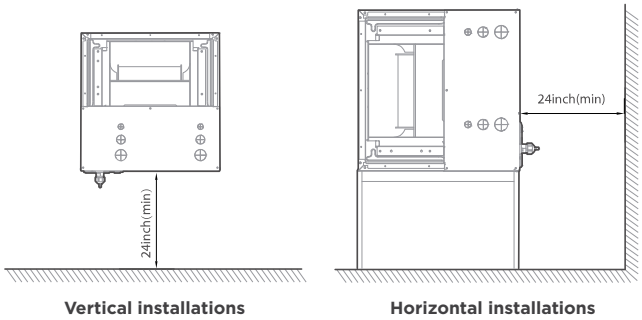

Fig. 4 — Horizontal Installations

Step 3 - Mount Positions

The units can be installed in a vertical (down and up) and horizontal (right and left) configuration.

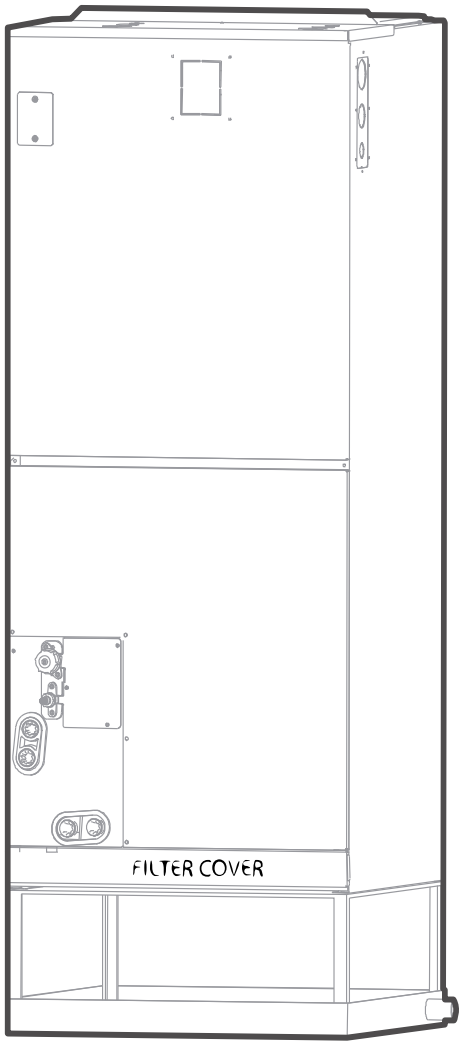

Fig. 5 — Vertical Installations

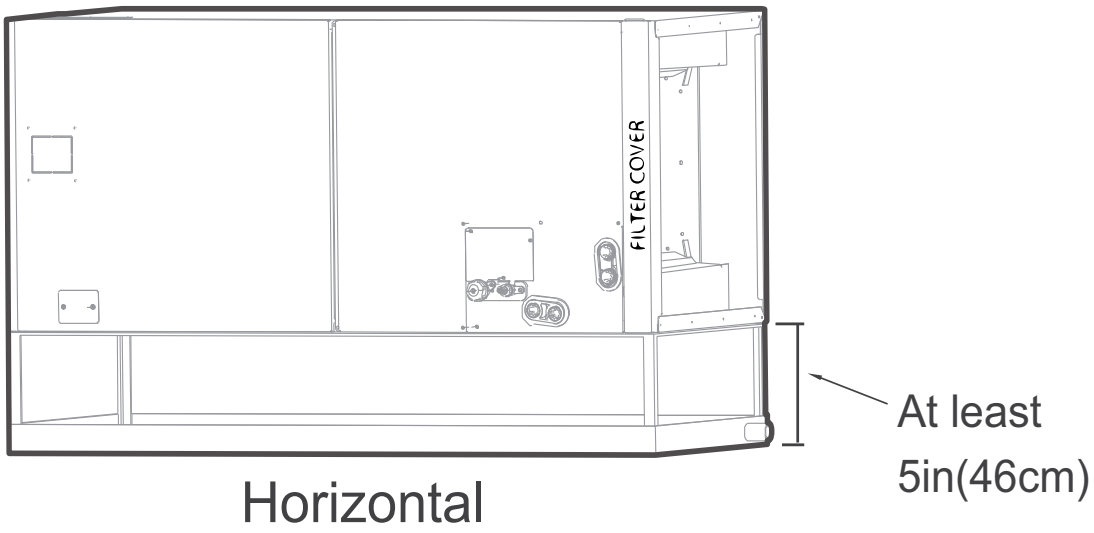

Fig. 6 — Horizontal Installations

NOTE: For horizontal installations, a secondary drain pan (not supplied) must be installed.

Step 4 - Select Installation Location

⚠ CAUTION

Install the indoor and outdoor units, cables and wires at least 3-1/5ft (1m) from televisions or radios to prevent static or image distortion. Depending on the appliances, a 3-1/5ft (1m) distance may not be sufficient.

The indoor unit must be electrically grounded per national and local electrical code.

Select the installation location of indoor units

WARNING
DO NOT INSTALL IN THE FOLLOWING LOCATIONS

DO NOT install the indoor unit in a moist environment. Excessive moisture can corrode the equipment, electrical components, and cause electrical shorts.

Areas with strong electromagnetic waves.

Coastal areas with high salt content in the air.

Areas with oil drilling or fracking.

Areas where flammable materials or gas are stored.

Areas where there may be detergent or other corrosive gases in the air, such as bathrooms or laundry rooms.

Areas where the air inlet and outlet may be obstructed.

Danger of explosion. Keep flammable materials and vapors, such as gasoline, away from the air handler.

WARNING
UNIT MUST BE INSTALLED IN A LOCATION THAT MEETS THE FOLLOWING REQUIREMENTS:

☑ Securely install the indoor unit on a structure that can support its weight. If the structure is too weak, the unit may fall and cause personal injury, unit and property damage, or even death.

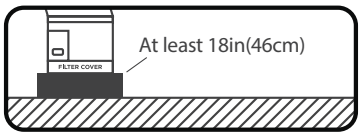

☑ Place the air handler so that heating elements are at least 18 inches (46 cm) above the floor for a garage installation. Failure to follow these instructions can result in death, explosion, or fire.

☑ Enough room for installation and maintenance.

☑ Enough room for the connecting pipe and drainpipe.

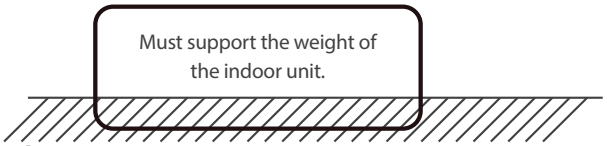

☑ The structure that the equipment is suspended from must support the weight of the indoor unit.

⚠ WARNING

between the bottom of the air handler and the return air plenum. Use fiber
aling method between the plenum and the air handler cabinet to ensure a t
is air handler or any gas-fueled appliance (i.e., water heater), or carbon mor

Step 5 - Preparation and Precaution for Installation

WARNING

There must be an airtight seal between the bottom of the air handler and the return air plenum. Use fiberglass sealing strips, foil duct tape, caulking, or equivalent sealing method between the plenum and the air handler cabinet to ensure a tight seal. Return air must not be drawn from a room where this air handler or any gas-fueled appliance (i.e., water heater), or carbon monoxide-producing device (i.e., wood fireplace) is installed.The return air intake and associated ductwork should be located away from any heat generating appliances, sources of warm or cool air, or other factors that may influence the return air temperature sensed by the AHU. An artificially high or low sensed return air temperature may adversely impact the system performance.

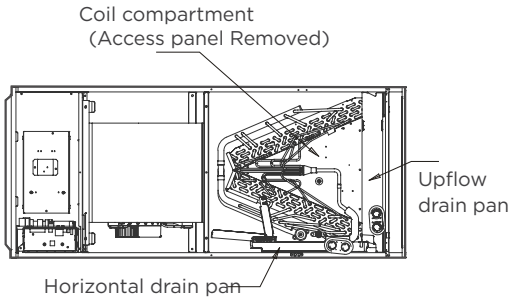

Fig. 7 — Unit (side view)

WARNING

Apply sealant around the places where the wires, refrigerant pipes and condensate pipes enter the cabinet.

Use duct tape or flexible sealant to seal closed any space around the holes where the drain lines exit the cabinet. Warm air must not be allowed to enter through any gaps or holes in the cabinet.

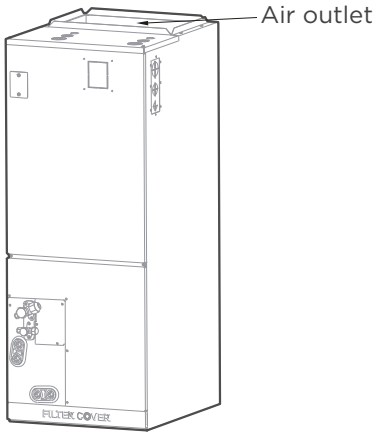

Fig. 8 — Air Outlet

NOTE: Remove all accessories and packing in the air outlet prior to installation.

Recommended Distances Between the Indoor Unit

The distance between the mounted indoor unit should meet the specifications illustrated in Figure 9.

Horizontal Installation

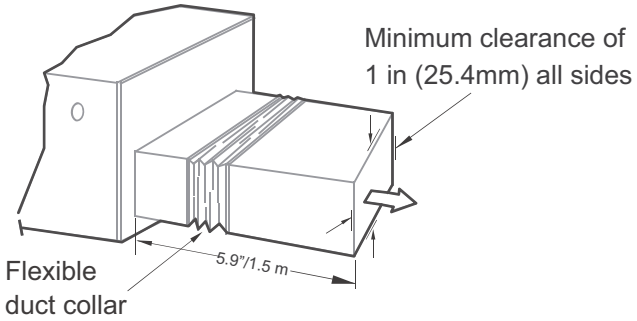

The outlet side pipe length 5.9ft/1.5m.

Fig. 9 — Horizontal Installation

Vertical Installation

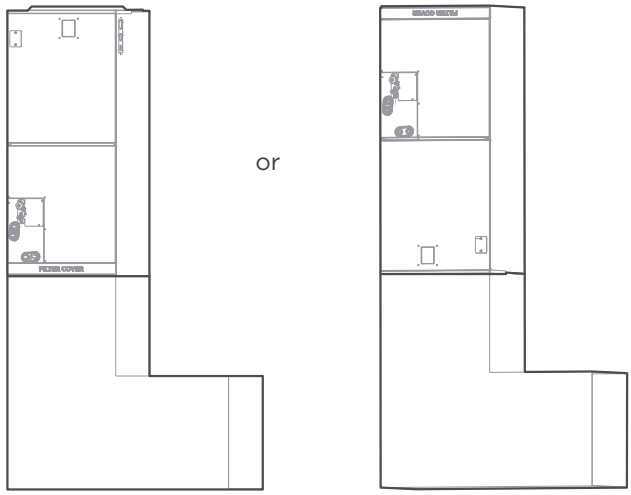

Fig. 10 — Vertical Installation

Securing instructions: When installed vertically (upward or downward), the lower end of the air outlet needs to be connected to the L-shaped metal air duct and fastened by screws.If return air is to be ducted, install the duct flush with the floor. Set the unit on the floor over opening. All return air must pass through the coil.

NOTE: The user needs to purchase a standard filter that meets the requirements of UL900. For questions about the selection of filters, consult the manufacturer.

WARNING

This appliance is not intended for use by persons (including children) with reduced physical, sensory or mental capabilities, or lack of experience and knowledge, unless they have been given supervision or instruction concerning use of the appliance by a person responsible for their safety. Children should be supervised to ensure that they do not play with the appliance.

Installation Position Requirements

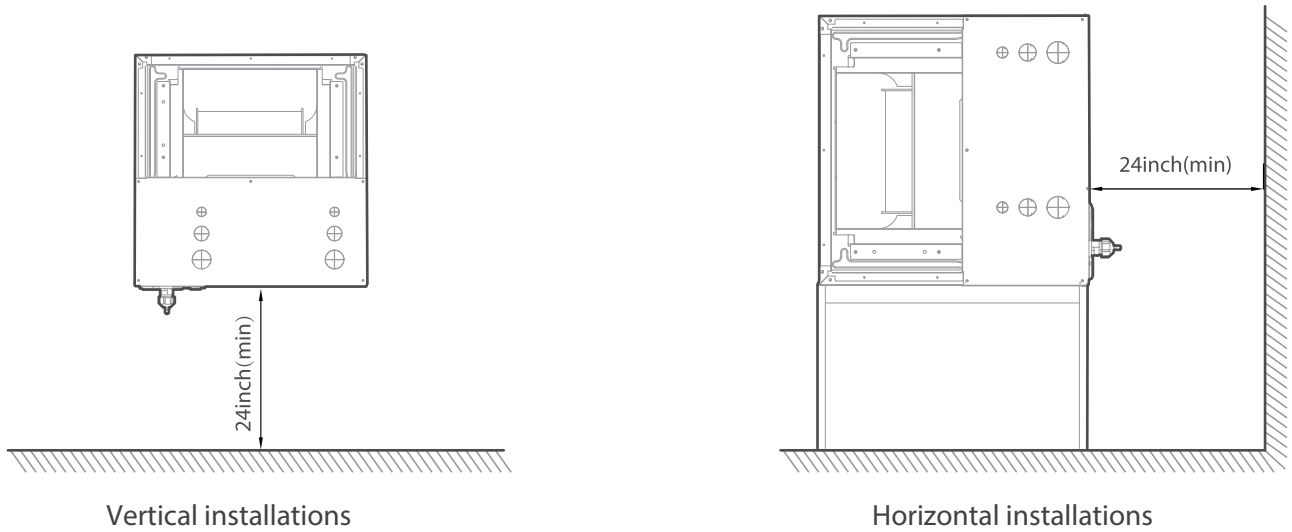

Fig. 11 —Vertical and Horizontal Installations

NOTE FOR DUCT CONNECTIONS:

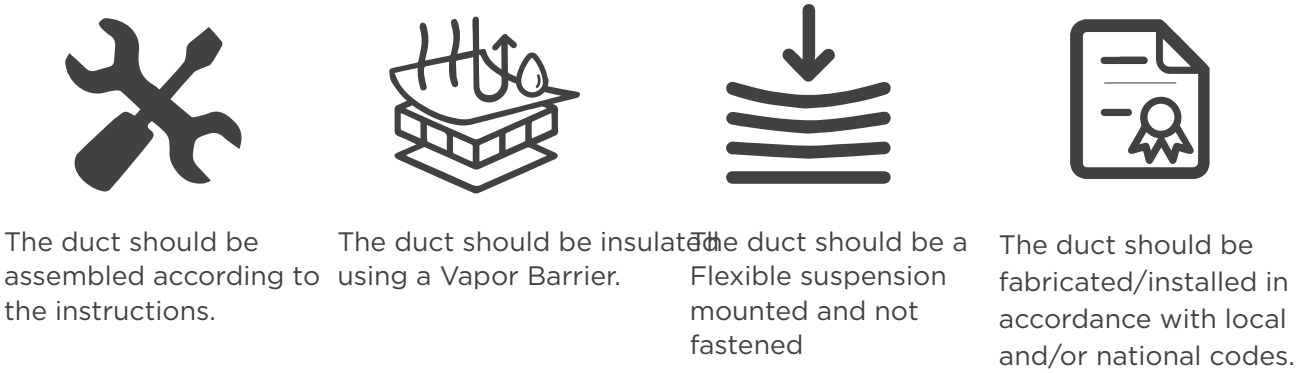

Fig. 12 — Duct Connections

Additional Requirements

Air supply and return may be handled in one of several ways best suited to the installation (see Table 10 on page 12 for dimensions for duct inlet and outlet connections). The vast majority of problems encountered with combination cooling systems can be linked to improperly designed or installed duct systems. It is therefore highly important to the success of an installation that the duct system be properly designed and installed. Use flexible duct collars to minimize the transmission of vibration/noise into the conditioned space. Where return air duct is short, or where sound could potentially to be a problem, sound absorbing liner should be used inside the duct.

Duct must be insulated where it runs through an unconditioned space during the cooling season. The use of a vapor barrier is recommended to prevent absorption of moisture from the surrounding air into the insulation. The supply air duct connection should be properly sized by use of a transition to match unit opening.

All ducts should be suspended using flexible hangers and never fastened directly to the structure.This unit is not designed for non-ducted (freeblow) applications. Duct work should be fabricated and installed in accordance with local and/or national codes.

⚠ CAUTION

A field-fabricated secondary drain pan, with a drain pipe to the outside of the building, is required in all installations over a finished living space or in any area that may be damaged by overflow from the main drain pan. In some localities, local codes may require a secondary drain pan for any horizontal installation.

Installation Direction Selection

The units can be installed in a vertical (down and up) and horizontal (right and left) configuration.

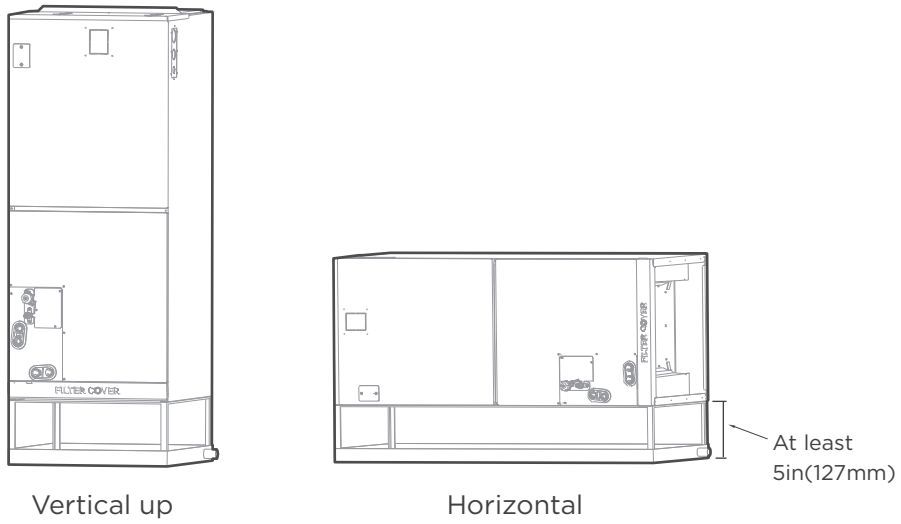

Fig. 13 — Vertical or Horizontal

NOTE: For horizontal installation a secondary drain pan (not supplied) must be installed 5” below the bottom of the air handler for proper drainage.

Airflow Direction for Different Installation Directions

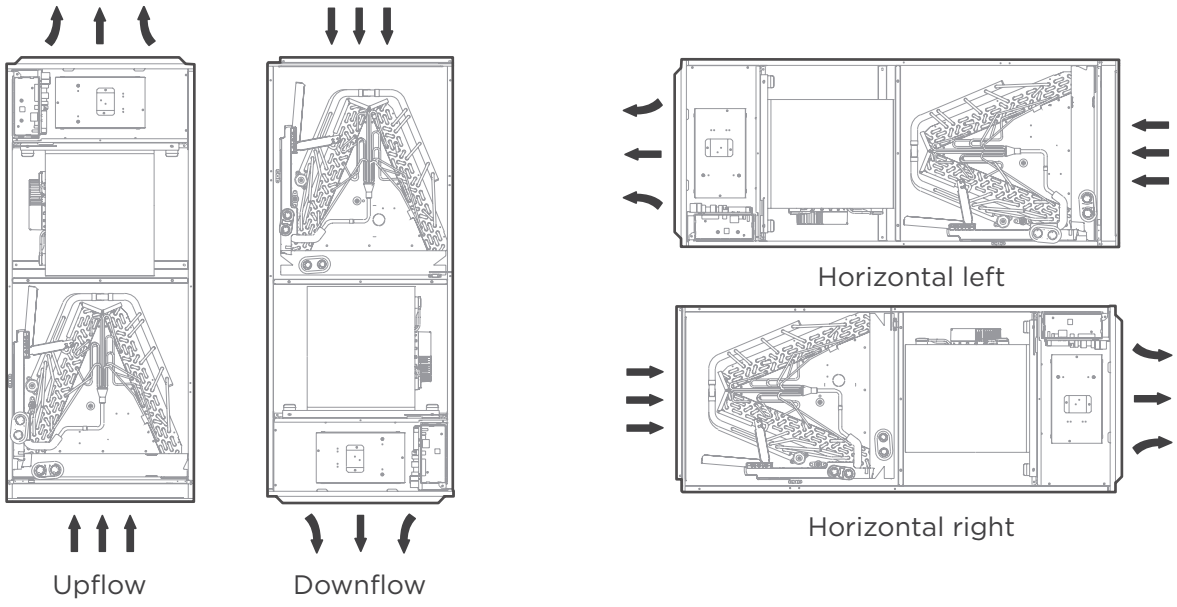

Fig. 14 — Installation Directions

NOTE: Vertical up and horizontal left installation does not need to change the direction of evaporator.

Step 6 - Connecting the Wire and Pipes

Follow these steps to perform vertical down installation and horizontal right installation.

1. Open the upper cover.
2. Open the cover of the electronic control box.
3. Connect the wire according to the wiring diagram.
4. Connect the pipes and install the drainage pipes.

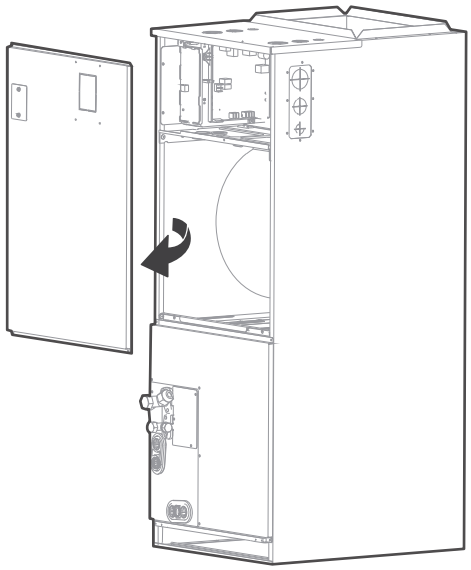

Fig. 15 — Connecting the Wire and pipes

Down Flow and Horizontal Right Steps

NOTE: The unit may be installed in one of the upflow, downflow, horizontal left or horizontal right orientations.

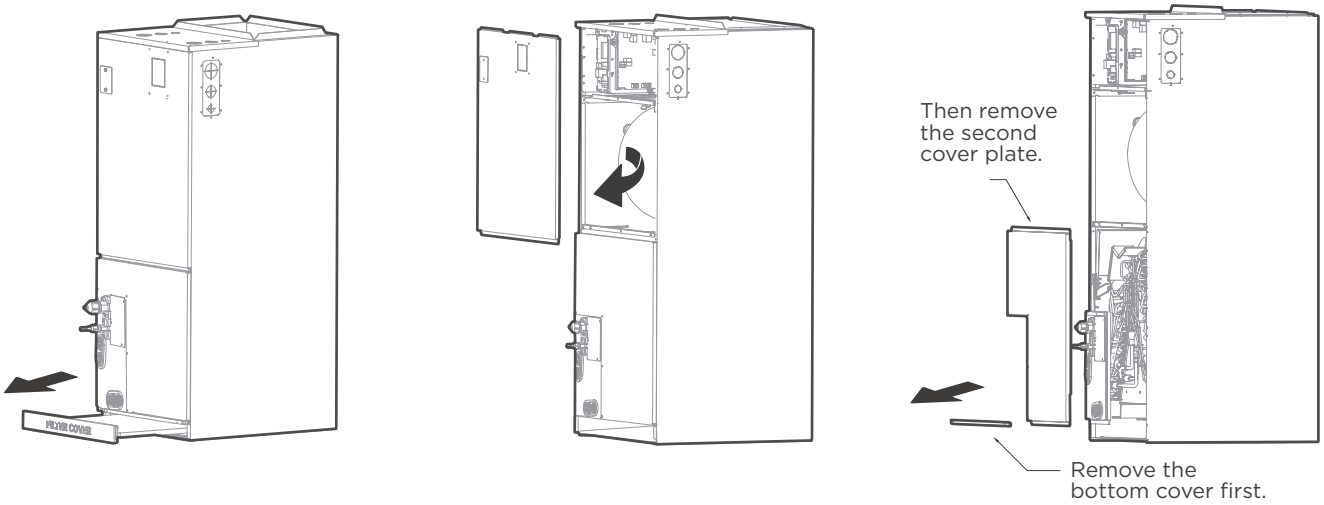

Step 1

Remove the filter door, then take the filter off.

Step 2

Remove the upper cover assembly.

Step 3

Remove the evaporator cover plate.

Step 4

Indication of the position of each temperature temperature sensor of the evaporator, confirm your model.

18-24K model

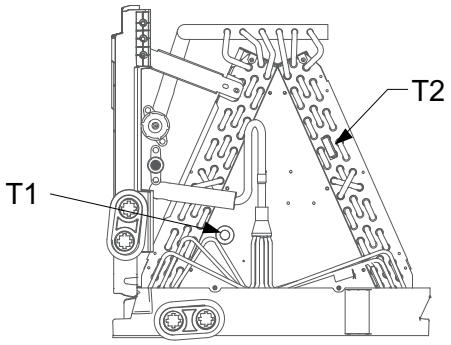

30-36K model

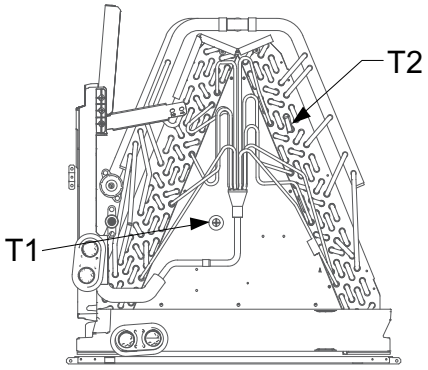

48-60K model

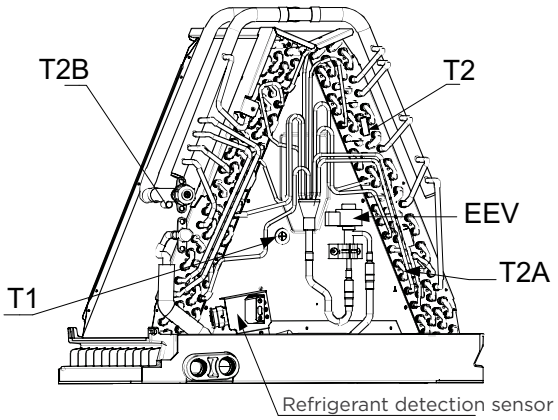

Step 5

Unplug temperature sensors T1,T2,refrigerant detection sensor from the control board.
T1: IDU room temp. sensor(T1)
T2: IDU coil temp. sensor(T2)

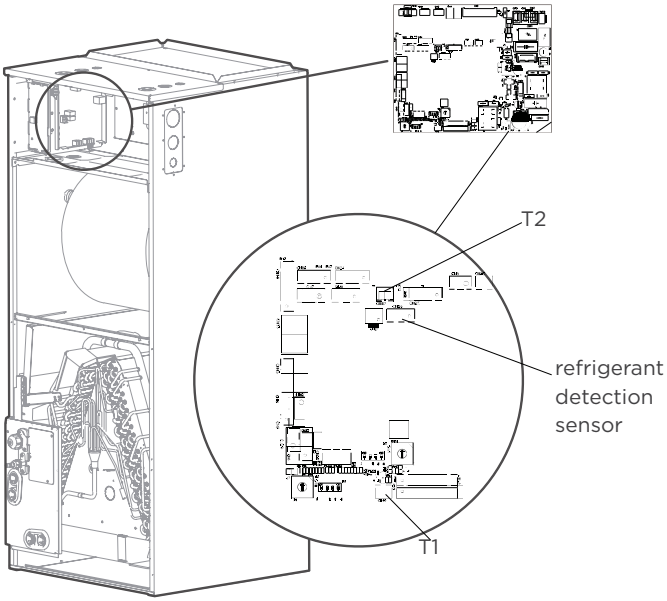

Step 6

Remove T1, T2, refrigerant detection sensor wire ties.

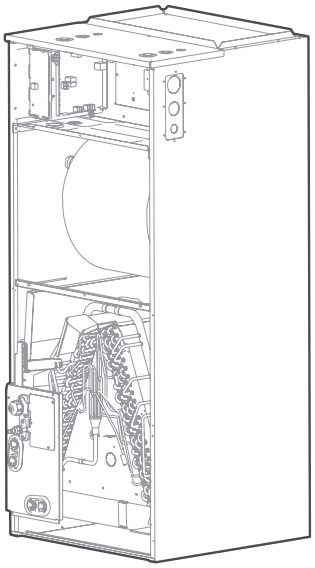

Step 7

Remove the evaporator and drain pan and rotate 180° (when your equipment need to be vertical downed configuration).

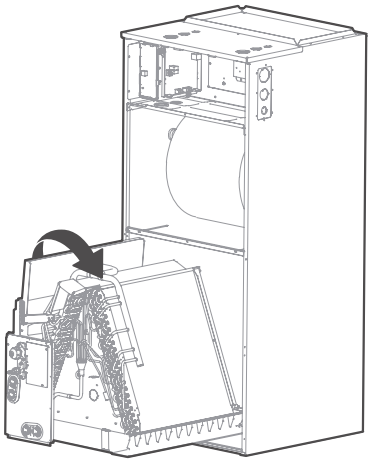

Step 8

Adjust the mounting parts position according to the direction of the equipment.

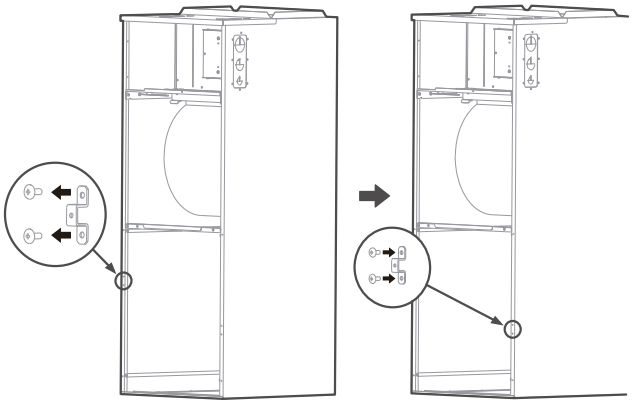

Step 9

Reinstall the evaporator and drain pan.

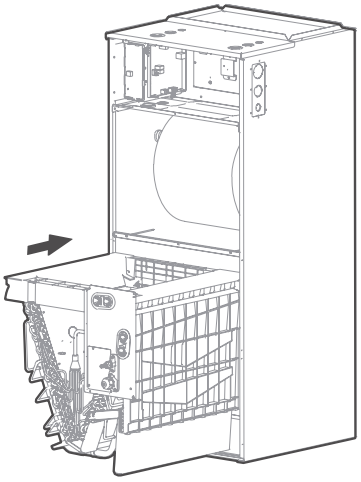

Step 10

Reinstall T1, T2, T2A, T2B sensor plugs and electronic expansion valve (EEV) and tie up the sensor wires.

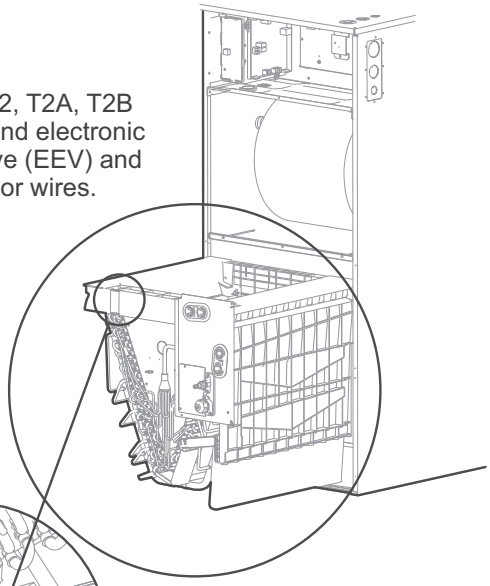

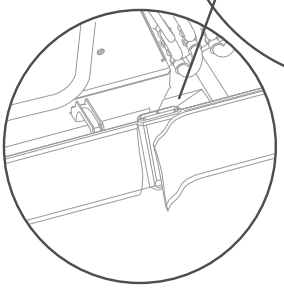

Cut the foam gasket.

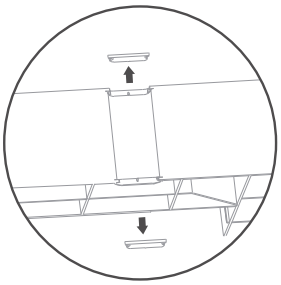

Remove knockouts.

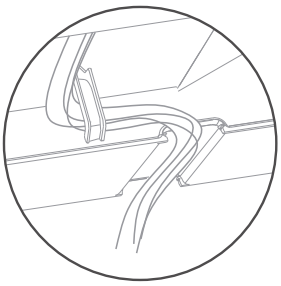

Hook the wire into the strap and go down from the wire slot.

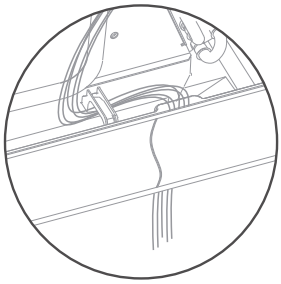

Replace the foam gasket over the wires.

NOTE: The wire body needs to pass through the wire groove from the drain pan and be stuck on the hook of the drain pan.

Step 11

The evaporator is assembled in place.

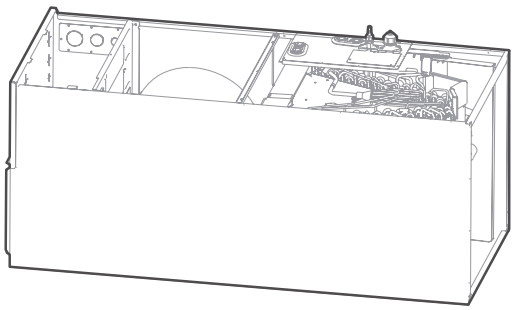

Step 12

Use cable ties to attach the room temperature sensor.

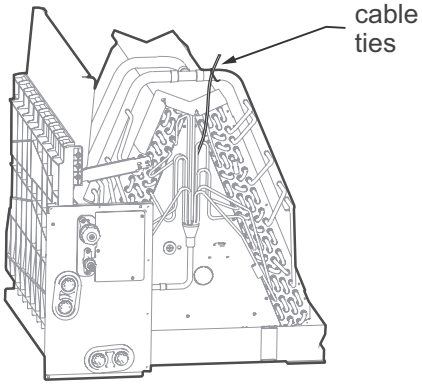

Step 13

Reinstall the evaporator cover plate.

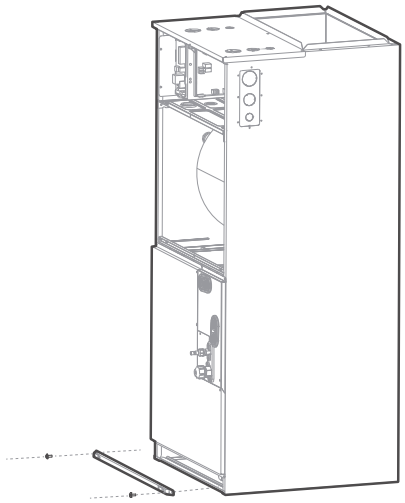

Step 14

Connect the wire according to the wiring diagram.

Step 15

Reassemble the upper cover and re-install the filter cover plate.

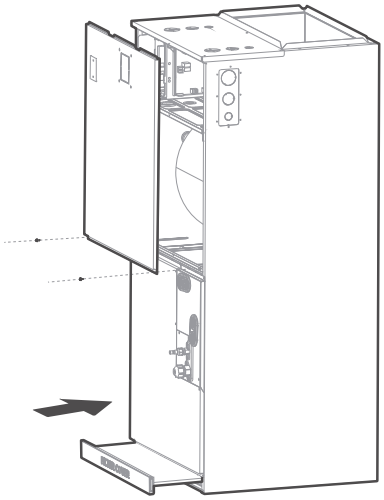

Step 16

Connect the pipes and install the drainage pipes.

⚠ CAUTION

FOR ALL PIPES INSTALLATION

Insulate all piping to prevent condensation, which could lead to water damage. The drainpipe is used to drain water away from the unit. If the drainpipe is bent or installed incorrectly, water may leak and cause a water-level switch malfunction. In **HEAT** mode, the outdoor unit discharges water. Ensure the drain hose is placed in an appropriate area to avoid water damage and icy conditions on walkways.

DO NOT pull the drainpipe forcefully; doing so could disconnect it.

NOTE: If installed above a finished living space, a secondary drain pan (as required by many building codes), must be installed under the entire unit and its condensate drain line must be routed to a location such that the user will see the condensate discharge.

NOTE ON PURCHASING PIPES: Installation requires PVC pipe or other suitable material per local and national codes, which can be obtained at your local hardware store or dealer.

⚠ WARNING

This appliance is not intended for use by persons (including children) with reduced physical, sensory or mental capabilities, or lack of experience and knowledge, unless they have been given supervision or instruction concerning use of the appliance by a person responsible for their safety. Children should be supervised to ensure that they do not play with the appliance.

⚠ WARNING

After removal of drain pan plug(s), check drain hole(s) to verify that drain opening is fully open and free of any debris. Also check to ensure that no debris has fallen into the drain pan during installation that may plug up the drain opening.
Seal around the exiting drain pipe, liquid and suction lines to prevent infiltration of humid air.
On units of this type, where the blower “draws” rather than “blows” air through the coil, traps must be installed in the condensate drain lines (primary and auxiliary, if used).
Traps prevent the blower from drawing air through the drain lines into the air supply.

Step 7 - Refrigerant Piping

IMPORTANT: Suction line must be insulated.

- **The minimum refrigerant line length between the indoor and outdoor units is 10 ft. (3 m).**
- **Table 13 lists the pipe sizes for the indoor unit. Refer to the outdoor unit's installation instructions for the additional allowed piping lengths and refrigerant information.**
- **Refer to the outdoor unit's installation manual for details regarding the allowable pipe length and height difference.**

Table 13 — Piping Size

NAME		MODEL	PIPE SPECIFICATION		REMARK
			LIQUID SIDE	GAS SIDE	
Connection Pipe Assembly	Residential	18K	Ø1/4in(Ø6.35mm)	Ø1/2in(Ø12.7mm)	Pipes are not included in the accessories and you need to purchase it separately from the local dealer.
		24K	Ø3/8in(Ø9.52mm)	Ø5/8in(Ø16mm)	
		30K	Ø3/8in(Ø9.52mm)	Ø5/8in(Ø16mm)	
		36K	Ø3/8in(Ø9.52mm)	Ø5/8in(Ø16mm)	
	Light Commercial	36K	Ø3/8in(Ø9.52mm)	Ø3/4in(Ø19mm)	
		48K	Ø3/8in(Ø9.52mm)	Ø3/4in(Ø19mm)	
		60K	Ø3/8in(Ø9.52mm)	Ø3/4in(Ø19mm)	

⚠ WARNING

All field piping must be completed by a licensed technician and must comply with the local and national regulations.
When the system is installed in a small room, measures must be taken to prevent the refrigerant concentration in the room from exceeding the safety limit in the event of refrigerant leakage. If the refrigerant leaks and its concentration exceeds its proper limit, hazards due to lack of oxygen may result.
When installing the refrigeration system, ensure that air, dust, moisture or foreign substances do not enter the refrigerant circuit. Contamination in the system may cause poor operating capacity, high pressure in the refrigeration cycle, explosion or injury.
Ventilate the area immediately if there is refrigerant leakage during the installation.
Leaked refrigerant gas is hazardous. Ensure there is no refrigerant leakage after completing the installation work.

Use the following steps to connect the refrigerant piping:

1. Run the interconnecting piping from the outdoor unit to the indoor unit.
2. Connect the refrigerant piping and drain line outside the indoor unit. Complete the pipe insulation at the flare connection then fasten the piping and wiring to the wall as required. Completely seal the hole in the wall.
3. Cut tubing to correct length.
   When preparing refrigerant pipes, take extra care to cut and flare them properly. This ensures efficient operation and minimizes the need for future maintenance.
   a. Measure the distance between the indoor and outdoor units.
   b. Using a pipe cutter, cut the pipe a little longer than the measured distance.
   c. Ensure the pipe is cut at a perfect 90° angle.

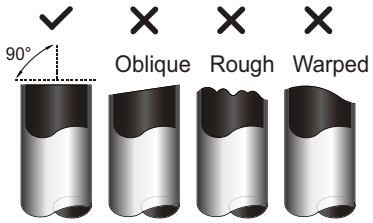

Fig. 16 — Pipe Cutting

4. Remove Burrs
   Burrs can affect the air-tight seal of the refrigerant piping connection. Therefore, they must be completely removed. To remove:
   a. Hold the pipe at a downward angle to prevent burrs from falling into the pipe.
   b. Using a reamer or deburring tool, remove all burrs from the cut section of the pipe.

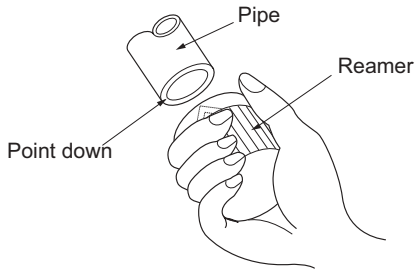

Fig. 17 — Deburring tool

5. Flare Pipe Ends
   Proper flaring is essential to achieving an airtight seal.
   a. After removing the burrs from the cut pipe, seal the ends with PVC tape to prevent foreign materials from entering the pipe.
   b. Sheath the pipe with insulating material.
   c. Place flare nuts on both ends of the pipe. Ensure they are facing the right direction. Once the ends are flared, it is impossible to put them on or change their direction.

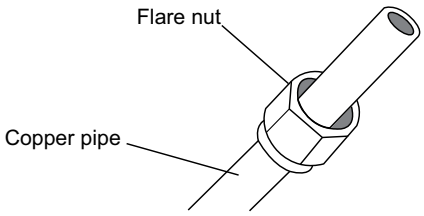

Fig. 18 — Copper pipe and flare nut

   d. Remove the PVC tape from ends of pipe when ready to perform the flaring work.
   e. Clamp the flare block on the end of the pipe. The end of the pipe must extend beyond the flare form.
   f. Place the flaring tool onto the form.
   g. Turn the handle of the flaring tool clockwise until the pipe is fully flared. Flare the pipe in accordance with the dimensions in Table 14.
   h. Remove the flaring tool and flare block, then inspect the end of the pipe for cracks and even flaring.

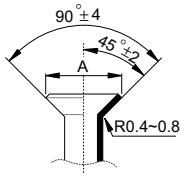

Fig. 19 — Flare shape

Table 14 — Flare Nut Spacing

PIPE GAUGE	TIGHTENING TORQUE	FLARE DIMENSION (A) (UNIT: MM/INCH)	
		MIN	MAX
1/4 in (Ø6.35)	13.3-14.7 ft-lb (18-20 N.m)	0.33/8.4	0.34/8.7
3/8 in (Ø9.52)	18-19 ft-lb (25-25 N.m)	0.52/13.2	0.53/13.5
5/8 in (Ø16)	42-52.4 ft-lb) (57-71 N.m)	0.76/19.2	0.78/19.7
3/4 in (Ø19)	48-49 ft-lb (65-67 N.m)	0.91/23.2	0.93/23.7

6. Connect the copper pipes to the outdoor unit first, then connect the pipes to the indoor unit. Connect the low-pressure pipe first, then connect the high pressure pipe.
7. When connecting the flare nuts, apply a thin coat of refrigeration oil to the flared ends of the pipes.
8. Align the center of the two pipes that you will connect.

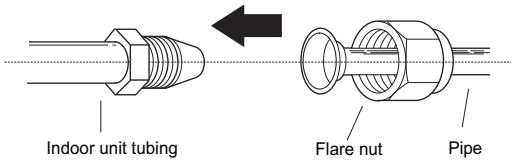

Fig. 20 — Align the center of the two pipes

9. Tighten the flare nut as much as possible by hand.
10. Using a wrench, grip the nut on the unit tubing.
11. While firmly gripping the nut, use a torque wrench to tighten the flare nut (review Table 14).

NOTE: Use both a backup wrench and a torque wrench when connecting or disconnecting pipes to or from the unit.

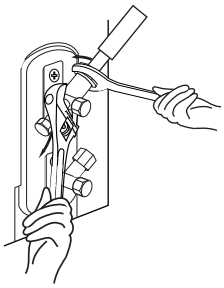

Fig. 21 — Torque wrench with backup wrench

All tubing bends should be performed with a properly sized tubing bender to prevent kinking or damaging the tubing.

12. After connecting the copper pipes to the outdoor unit, wrap the power cable, signal cable and the piping together with binding tape.

NOTE: While bundling these items together, DO NOT intertwine or cross the signal cable with any other wiring.

13. Thread this lineset through the wall to connect to the indoor unit.
14. Refer to the liquid line and gas line connection O.D. sizes in Table 13 based on the model being installed. Cut and deburr the tubing (review "Remove Burrs" on page 24) to prepare it for brazing. Setup the nitrogen apparatus and connect to the outside unit to flow nitrogen while brazing. Braze the tubing and any fittings to obtain a proper seal.
15. Adjust the nitrogen apparatus to pressurize the system. Pressure test the system to a maximum of 500 psig for at least 60 minutes.
16. Insulate suction line completely, including the outdoor unit valves.

⚠ CAUTION

Wrap insulation around the piping. Direct contact with the bare piping may result in burns or frostbite. Ensure the pipe is properly connected. Over tightening may damage the bell mouth and under tightening may lead to leakage.

17. Brazing Adapter (Optional)

When flare to braze adapter is used, follow these steps:

a. Refer to the liquid line and gas line connection O.D. sizes in Table 13 based on the model being installed. Cut and deburr the tubing (review Remove Burrs on page 24) to prepare it for brazing. Setup the nitrogen apparatus and connect to the outside unit to flow nitrogen while brazing. Braze the tubing and any fittings to obtain a proper seal.
b. Adjust the nitrogen apparatus to pressurize the system. Pressure test the system to a maximum of 500 psig for at least 60 minutes.
c. Insulate suction line completely, including the outdoor unit valves.

NOTE: MINIMUM BEND RADIUS: Carefully bend the tubing in the middle according to Figure 22. DO NOT bend the tubing more than 90° or more than 3 times.

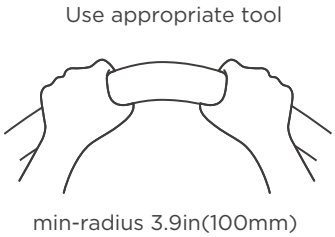

Fig. 22 — Minimum Bend Radius

d. After connecting the copper pipes to the indoor unit, wrap the power cable, signal cable and the piping together with binding tape.

NOTE: DO NOT intertwine or cross the signal cable with any other wiring.

e. Thread this pipeline through the wall and connect it to the outdoor unit.
f. Insulate all the piping, including the valves of the outdoor unit.
g. Open the stop valves of the outdoor unit to start the flow of the refrigerant between the indoor and outdoor unit.

⚠ CAUTION

FOR ALL PIPES INSTALLATION

Ensure there is no refrigerant leak after completing the installation work. If there is a refrigerant leak, ventilate the area immediately and evacuate the system (refer to the Air Evacuation section of this manual).

Vertical Installations

These units operate with a negative pressure at the drain connections and a drain trap is **required**. Install the trap as close as possible to the unit. Ensure the top of the trap is below the connection to the drain pan to allow complete drainage of the pan.

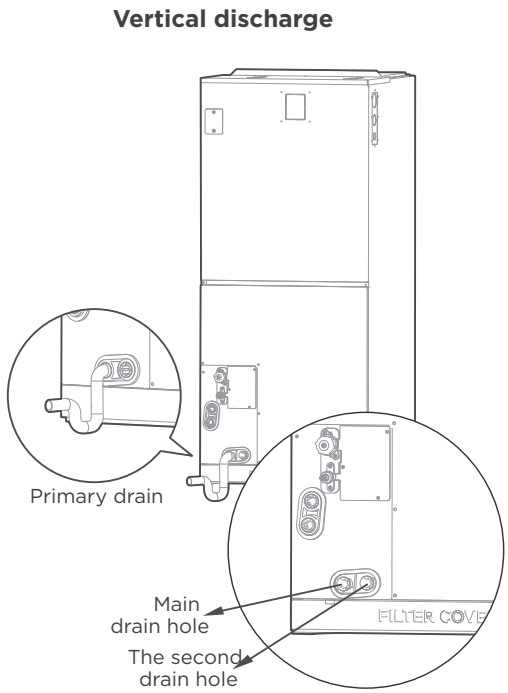

Fig. 23 — Vertical Discharge

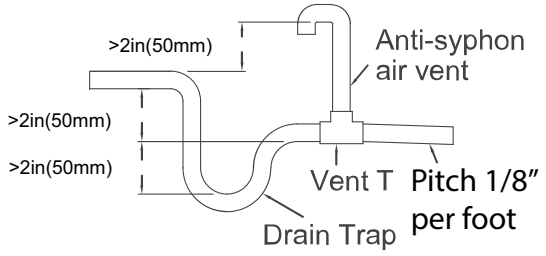

Fig. 24 — Drain Trap

NOTE: Horizontal runs must also have an anti-siphon air vent (standpipe) install ahead of the horizontal run to eliminate air trapping.

NOTE ON DRAINPIPE INSTALLATION

- Figure 24 shows how to trap or plug all drains during vertical discharge.
- Figure 24 shows how to trap or plug all drains during right-hand discharge.
- The seal plug are supplied as accessories and should be screwed tightly only by hand.
- Incorrect installation could cause water to flow back into the unit and flood.

CAUTION

The drainpipe outlet should be at least 1.9in(5cm) above the ground. If the outlet touches the ground, the unit may become blocked and malfunction.

REFRIGERANT PIPING CONNECTION

WARNING

All field piping must be completed by a licensed technician and must comply with the local and national regulations.
When the air conditioner is installed in a small room, measures must be taken to prevent the refrigerant concentration in the room from exceeding the safety limit in the event of refrigerant leakage. If the refrigerant leaks and its concentration exceeds its proper limit, hazards due to lack of oxygen may result.
When installing the refrigeration system, ensure that air, dust, moisture or foreign substances do not enter the refrigerant circuit. Contamination in the system may cause poor operating capacity, high pressure in the refrigeration cycle, explosion or injury.
Ventilate the area immediately if there is refrigerant leakage during the installation. Leaked refrigerant gas is both toxic and may be flammable. Ensure there is no refrigerant leakage after completing the installation work.

Pipe Length and Elevation

Table 15 — Maximum Length and Drop Height Based on Models (Unit: ft./m)

CAPACITY (BTU/H)	MAXIMUM PIPING LENGTH		MAXIMUM DROP HEIGHT	
	ft.	m	ft.	m
18K	98.4	30	65.6	20
24K/30K	164	50	82	25
36K/48K/60K	213	65	98.4	30

Ensure that the length of the refrigerant pipe, the number of bends, and the drop height between the indoor and outdoor units meets the requirements (see Table 15).

AIR-HANDLER REFRIGERANT PIPING CONNECTION

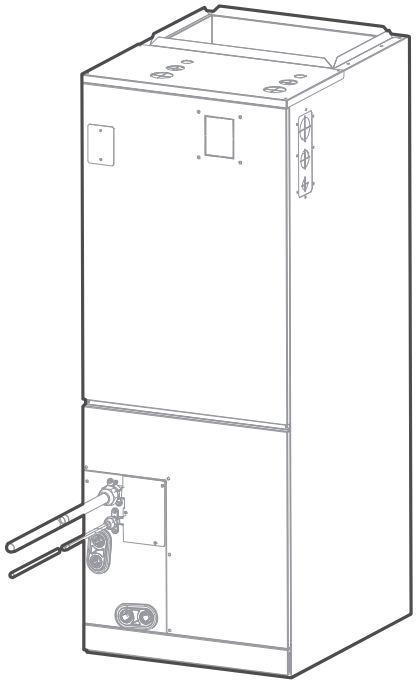

Flare Connection

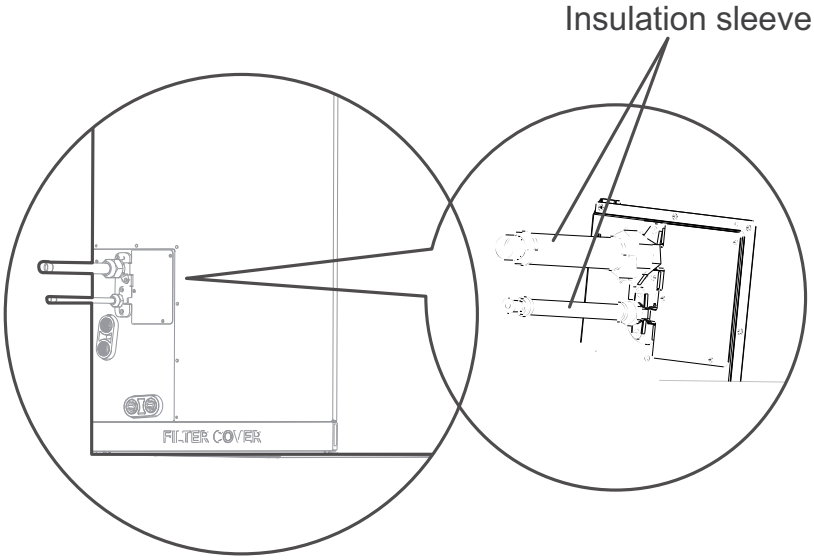

After the unit is installed, wrap the piping and brass fitting with foam tape.

You need to wrap all the connected copper pipes, nuts and other metal parts into the insulation.

Fig. 25 — Correct Refrigerant Piping Connecting Installation Methods

CONNECTION DIAGRAM

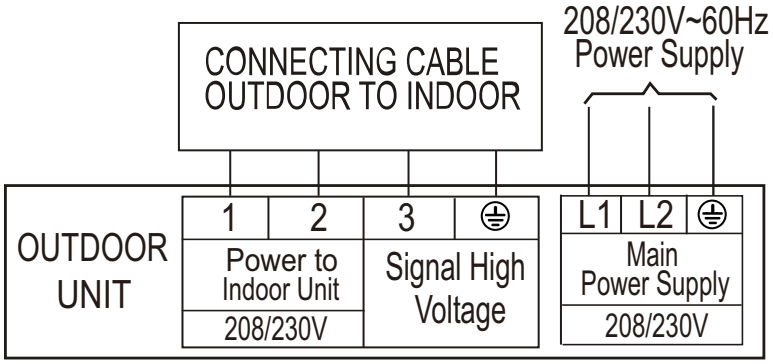

Fig. 26 — Connection Diagram (208/230V) Sizes 18K - 36K (XB3)

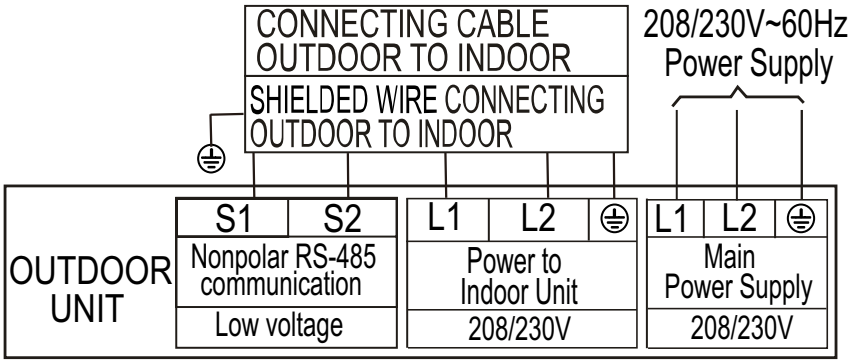

Fig. 27 — Connection Diagram (208/230V) Sizes 36K (XA3) - 60K

WIRING PRECAUTIONS

- All wiring must comply with local and national electrical codes, regulations and must be installed by a licensed electrician.
- All electrical connections must be made according to the Electrical Connection Diagram located on the panels of the indoor and outdoor units.
- If there is a serious safety issue with the power supply, stop work immediately. Explain your reasoning to the client, and refuse to install the unit until the safety issue is properly resolved.
- Power voltage should be within 90-110% of rated voltage. Insufficient power supply can cause malfunction, electrical shock, or fire.
- Installation of an external surge suppressor at the outdoor disconnect is recommended.
- If connecting power to fixed wiring, a switch or circuit breaker that disconnects all poles and has a contact separation of at least 1/8in (3mm) must be incorporated in the fixed wiring. The qualified technician must use an approved circuit breaker or switch.
- Only connect the unit to an individual branch circuit. Do not connect another appliance to that Circuit.
- Make sure to properly ground the air conditioner.
- Every wire must be firmly connected. Loose wiring can cause the terminal to overheat, resulting in product malfunction and possible fire
- Do not let wires touch or rest against refrigerant tubing, the compressor, or any moving parts within the unit.
- To avoid getting an electric shock, never touch the electrical components soon after the power supply has been turned
- After turning o the power, always wait 10 minutes or more before you touch the electrical components.
- Make sure that you do not cross your electrical wiring with your signal wiring.
- This may cause distortion, interference or possibly damage to circuit boards.
- No other equipment should be connected to the same power circuit.
- Connect the outdoor wires before connecting the indoor wires.

Wiring Overview

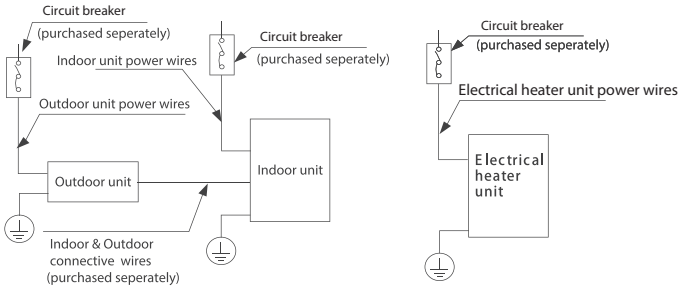

Fig. 28 — Wiring Overview

Specific Wiring Methods

WARNING

Please refer to the wiring nameplate for the wiring method. Do not connect the power cord to the communication line, as this may damage the system.

Connection method A(recommend):

Refer to the wiring method of internal and external machine communication and wired controller as follows:

(A)

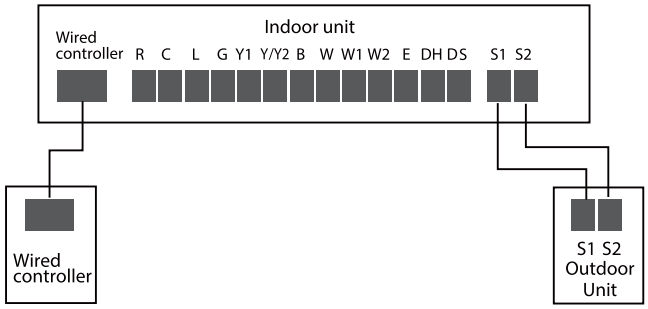

(B)

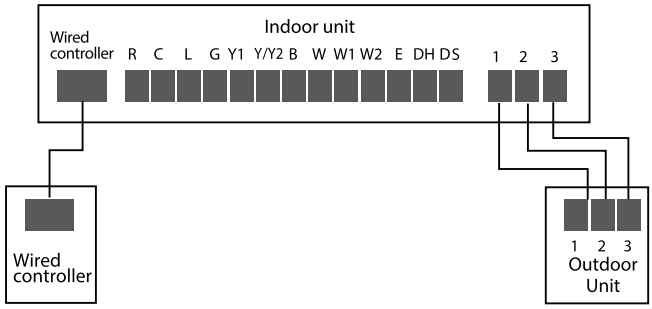

Connection method B:

To use a 24V thermostat, you need to refer to the following wiring:

(A)

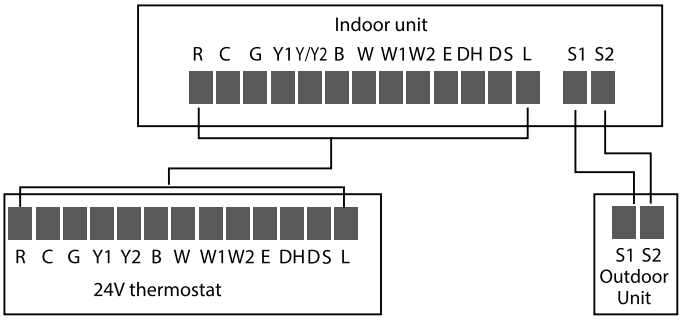

(B)

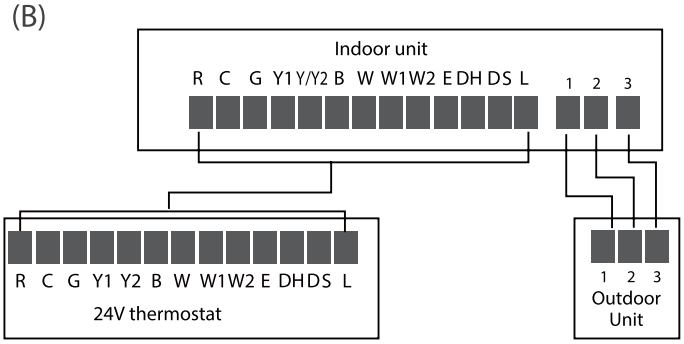

NOTICE

The wiring method of the thermostat and the internal machine refers to the wiring of the non-communication scheme.

WIRING DIAGRAMS

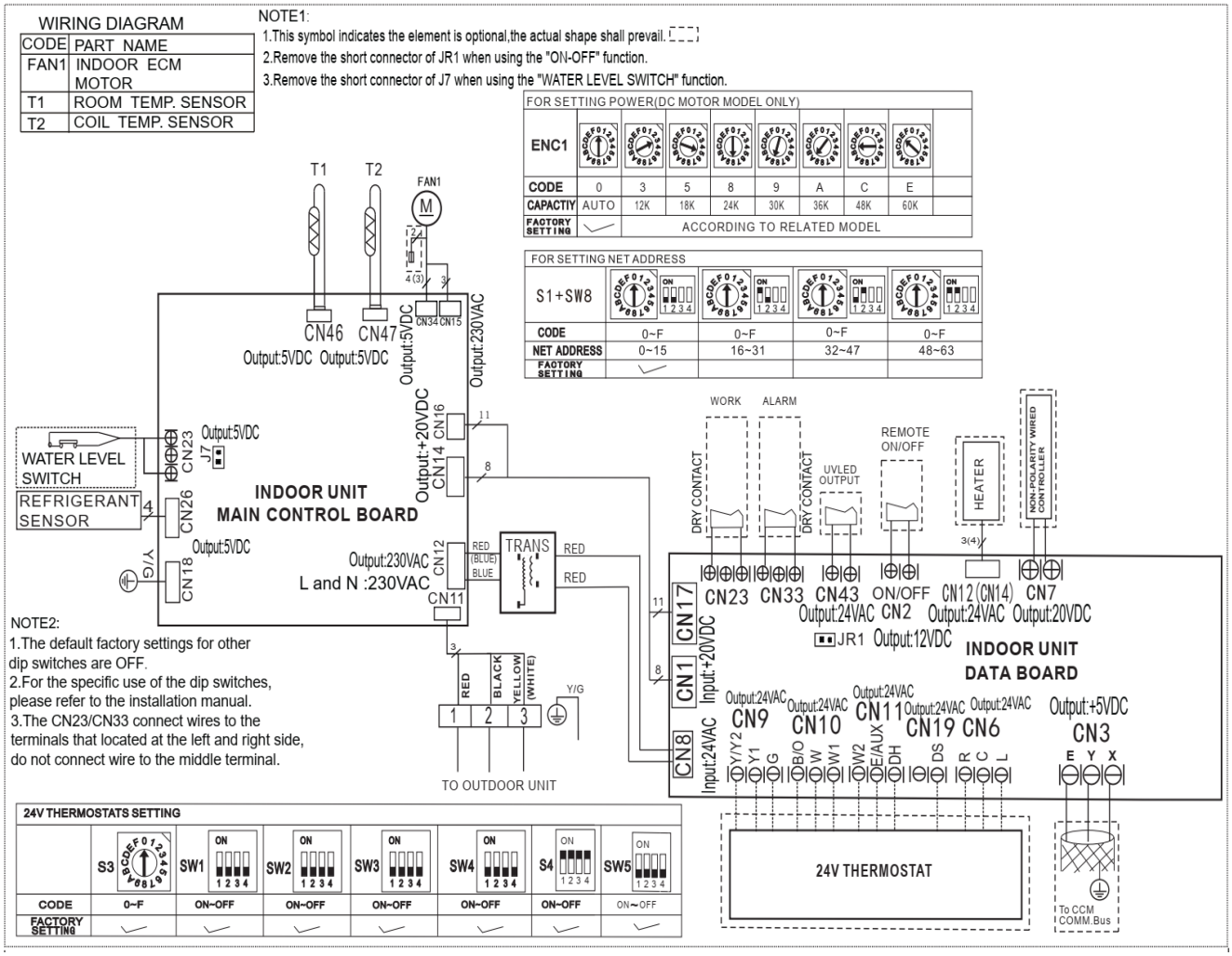

Fig. 29 — Sizes 18K- 24K

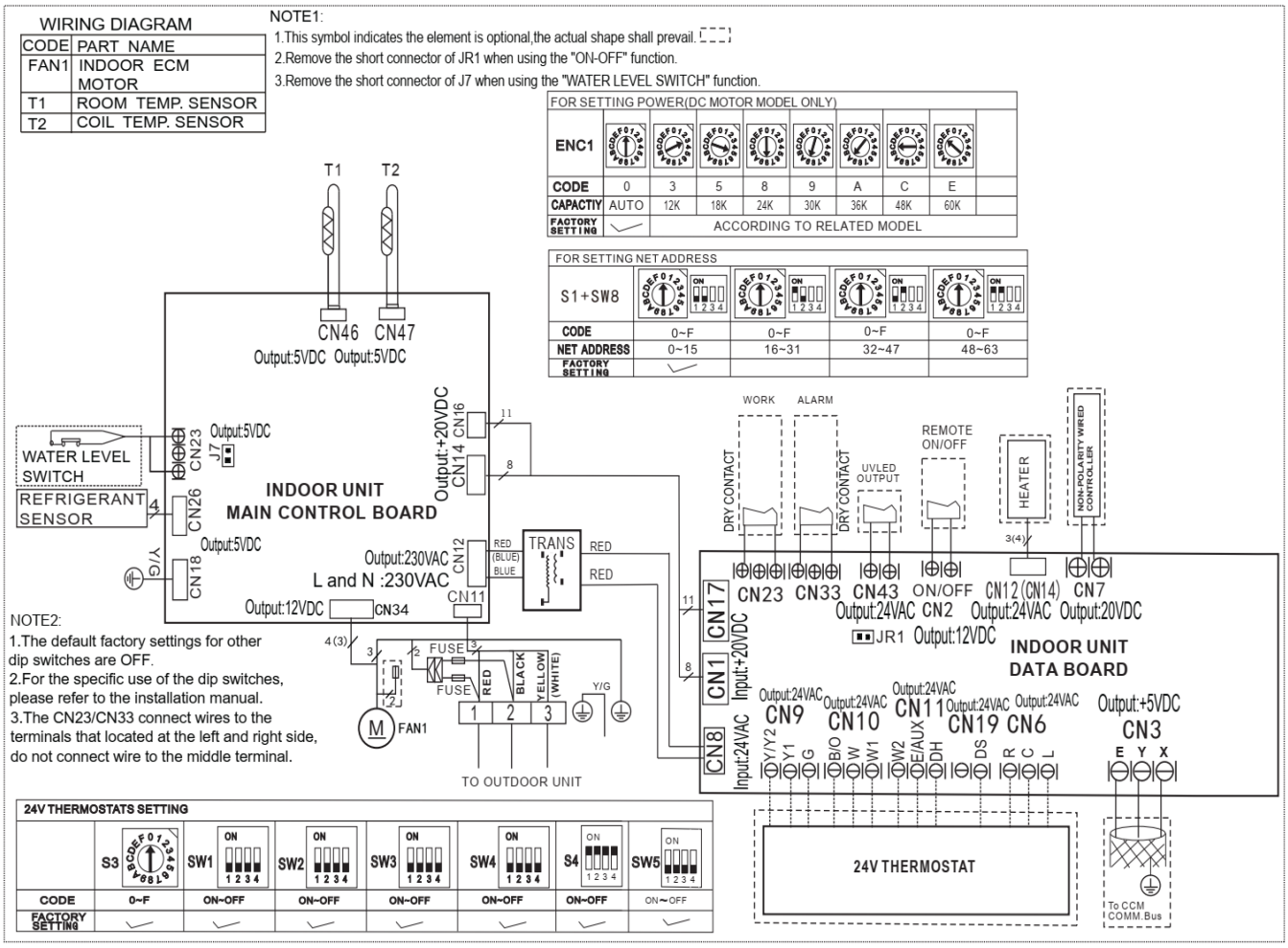

Fig. 30 — Sizes 30K, 36K (XB3)

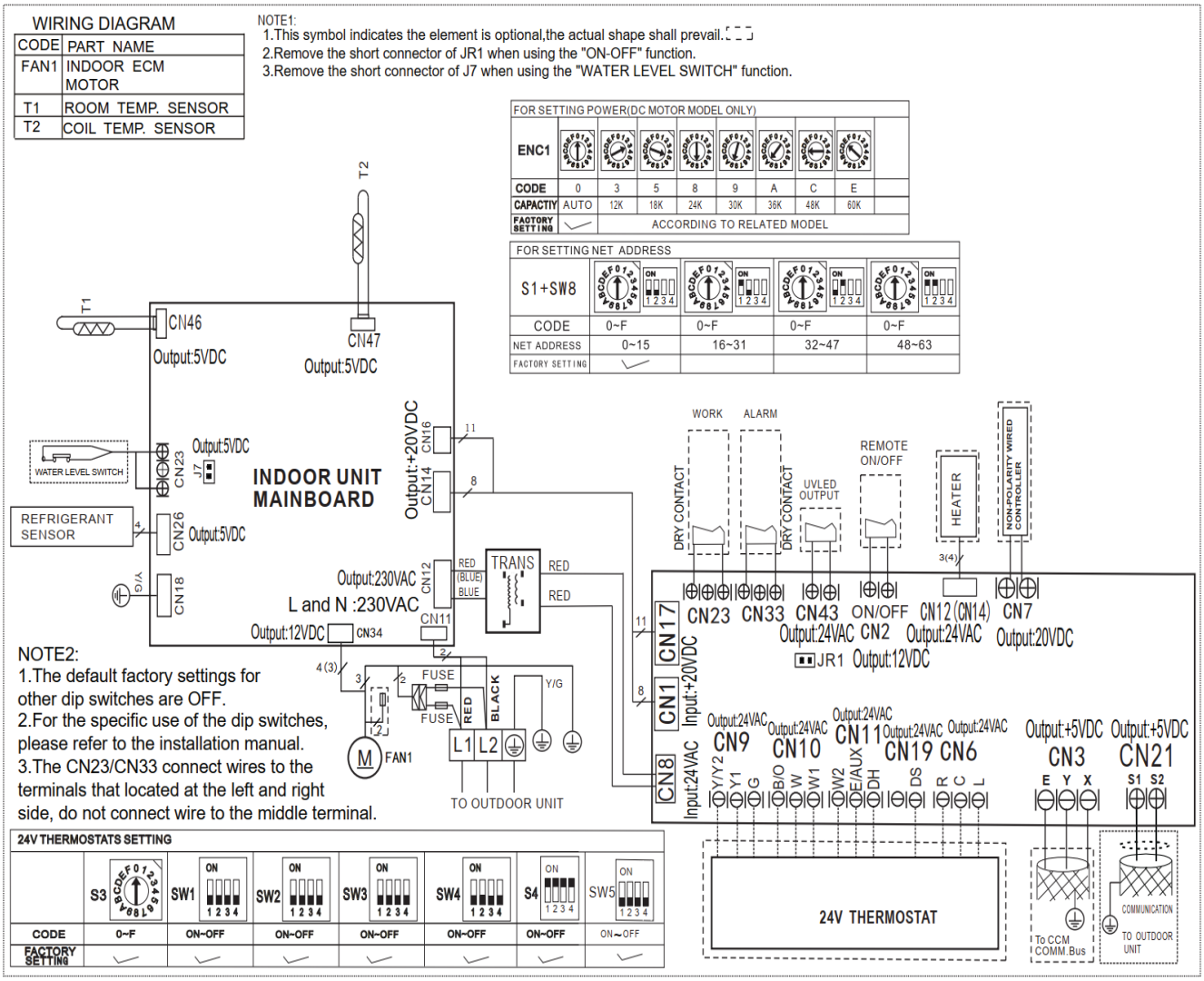

Fig. 31 — Sizes 36K (XA3), 48K and 60K

Wiring Overview

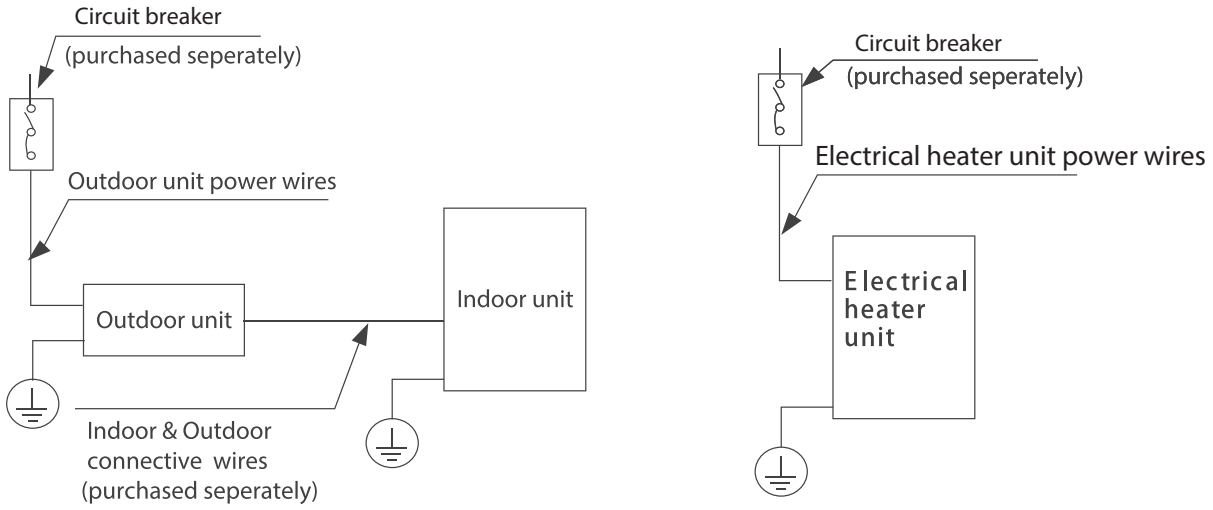

Fig. 32 — Wiring Overview

WIRELESS REMOTE CONTROLLER INSTALLATION

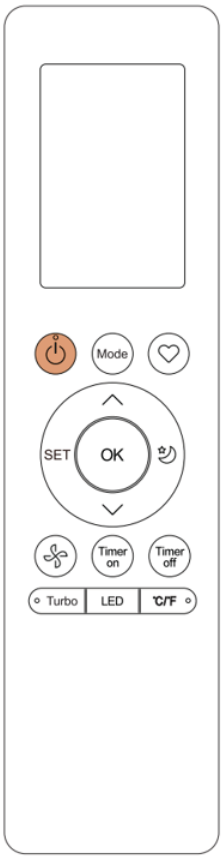

Fig. 33 — Wireless Remote (RG10F8(2)/BGEFU1)

To attach the mounting bracket:

1. Use the two screws supplied with the wireless remote control to attach the mounting bracket to the wall in a location selected by the customer and within operating range.
2. Install the batteries in the remote control.
3. Place the remote control into the remote control mounting bracket.

NOTE: For remote control operation, refer to the remote control's owners manual.

OPTIONAL WIRED WALL-MOUNTED REMOTE CONTROL INSTALLATION

The wired remote controller comes with the following items:

- A set of installation instructions and owner's manuals
- 3 M4X20 Screws to mount on the wall
- 4 wall plugs to mount on the wall
- 2 M4X25 to mount on switch box
- 2 plastic screw bars to fix on switch box
- 1 set of batteries
- 1 set of connecting wires to connect to indoor unit’s main board

Fig. 34 — Wired Controller

For wired controller set up and installation instructions, consult the wired controller installation manual.

SETTING UP AIRFLOW AND STATIC PRESSURE

Accessing the INQUIRY Mode

CAUTION

Read and understand the function changes you wish to make in advance. Changes can only be made in the **SERVICE** mode, but to access **SERVICE** mode, the remote must be in the **INQUIRY** mode first. Refer to the Remote Controller Service Mode Set Up instructions to enable the **SERVICE** mode. Neither the indoor unit nor the remote control displays the new level of any of the changes made while in the **INQUIRY** mode. Be sure to document the changes you have made to the system's programming using the **INQUIRY** mode. Once you complete the changes and exit the **INQUIRY** mode, if additional changes are made to the programming, the system will not show the new previously set level(s).

For example, when you first access **CODE 22**, **Heating Temperature Compensation**, the remote control display defaults to **0**. If you change it to **-2,** then save and exit out of the **INQUIRY** mode, the next time someone goes back in and accesses **CODE 22**, the remote's display will not display **-2**. Instead the display will show **0** because that's the default. If you are unsure of the previous changes, due to a lack of documentation, you could press the **DOWN** symbol to the maximum change range of **-6**, then press the **UP** symbol until you are back to **0**, and make the new adjustments accordingly. Be sure to document the changes when you are done.

Simultaneously press **ON/OFF** and **FAN SPEED** for 8 seconds:

a. The remote is now in the **INQUIRY** mode.
b. The remote control remains in the **INQUIRY** mode for 1 minute if no other button is pressed.
c. While in the **INQUIRY** Mode, the remote display cancels all icons except **AUTO**, **COOL**, **DRY**, **HEAT** and **Battery Strength**.
d. The remote control digital display defaults to **0** upon entering the **INQUIRY** mode.
e. In the **INQUIRY** mode, each digital code (from 0 to 30) is accessed by pressing the **UP** or **DOWN** arrows.
f. The **INQUIRY** information appears on the high wall indoor unit display in approximately 1 second after accessing the digital code. Press **OK** to send as well.
g. In the **INQUIRY** mode, all other buttons and operations are invalid except for **UP**, **DOWN** and **OK** or the operation to exit the **INQUIRY** mode.

Remote Controller Service Mode Set Up

NOTE: While in the INQUIRY mode, refer to the following instructions to enter SERVICE mode for the applicable codes.

Below is a list of **INQUIRY** modes and serviceable functions.

a. Before using the remote's service functions, turn **OFF** the indoor unit with the remote.
b. Turn **OFF** the power to the outdoor unit for 2 minutes. Turn the power back **ON**.
c. Remove the batteries from the remote and wait for the remote screen to clear. Within 30 seconds of replacing the batteries, use **UP** or **DOWN** to scroll through the **INQUIRY** modes.
d. To enter the **SERVICE** mode for an applicable **INQUIRY** mode, press **ON/OFF** for 2 seconds.
e. After **SERVICE** adjustments have been made, press **ON/OFF** for 2 seconds to exit the **SERVICE** mode and return to the **INQUIRY** mode.
f. Once operations in the **INQUIRY** mode are complete, press **ON/OFF** and **FAN SPEED** for 2 seconds to exit. All buttons on the remote controller are disabled for 60 seconds
g. To ensure changes are locked, power down the outdoor unit for three (3) minutes after all the service mode changes are made.

FAN PERFORMANCE

Vertical, Horizontal Right, Horizontal Left

Setting of air volume through service mode:

- See Remote Controller Service Mode Set Up on page 35 to access the **SERVICE** mode through the **INQUIRY** mode.
- Use the **UP** and **DOWN** arrow buttons on the remote, scroll to **CODE 23-Maximum Cooling Fan Speed for Cooling** fan speed changes and **CODE 25-Maximum Heating Fan Speed for Heating Fan Speed** changes.

18K

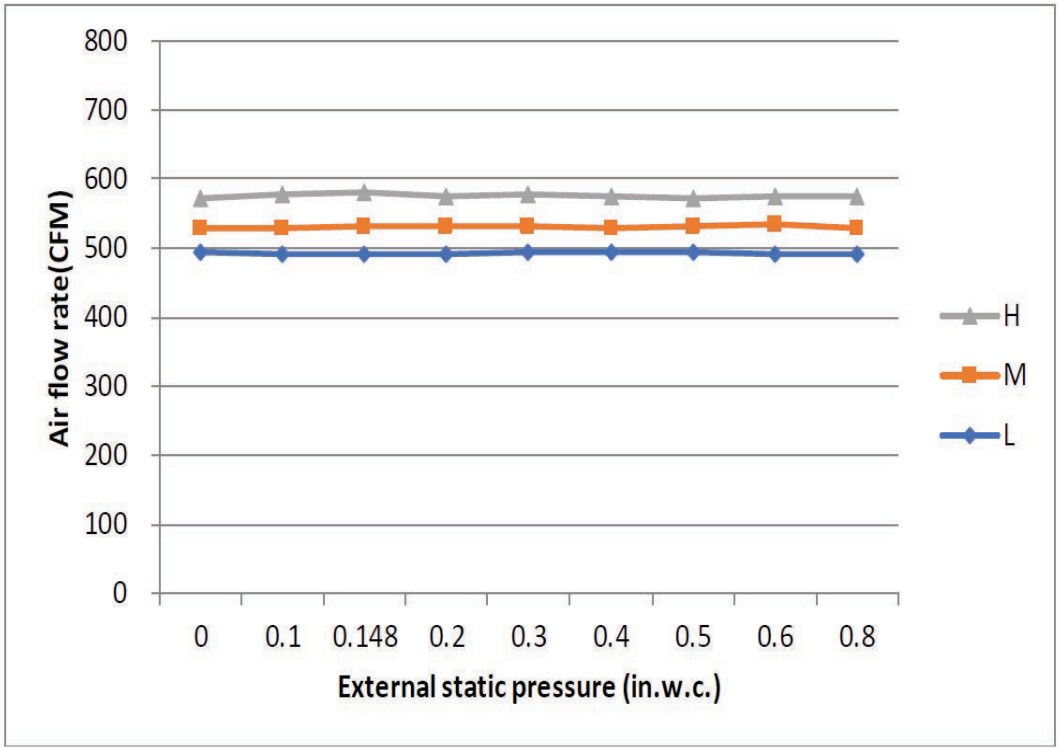

COOLING	Default	-1	-2	-3	-4	-5	-6	-7
TURBO	618	598	578	558	538	518	498	478
HIGH	576	556	536	516	496	476	456	436
MIDDLE	529	509	489	469	449	429	418	418
LOW	488	468	448	428	408	400	400	400
COOLING	Default	-8	-9 ~ -40	+1	+2	+3	+4	+5 ~ +20
TURBO	618	458	453	635	635	635	635	635
HIGH	576	435	435	596	616	618	618	618
MIDDLE	529	418	418	549	569	589	600	600
LOW	488	400	400	508	528	548	568	582

HEATING	Default	-1	-2	-3	-4	-5	-6 ~ -40	+1	+2
TURBO	565	545	525	505	485	465	453	585	605
HIGH	541	521	501	481	461	441	435	561	581
MIDDLE	435	418	418	418	418	418	418	455	475
LOW	400	400	400	400	400	400	400	420	440
HEATING	Default	+3	+4	+5	+6	+7	+8	+9	+10~+20
TURBO	565	625	635	635	635	635	635	635	635
HIGH	541	601	618	618	618	618	618	618	618
MIDDLE	435	495	515	535	555	575	595	600	600
LOW	400	460	480	500	520	540	560	580	582

Manufacturer reserves the right to change, at any time, specifications and designs without notice and without obligations.

24K

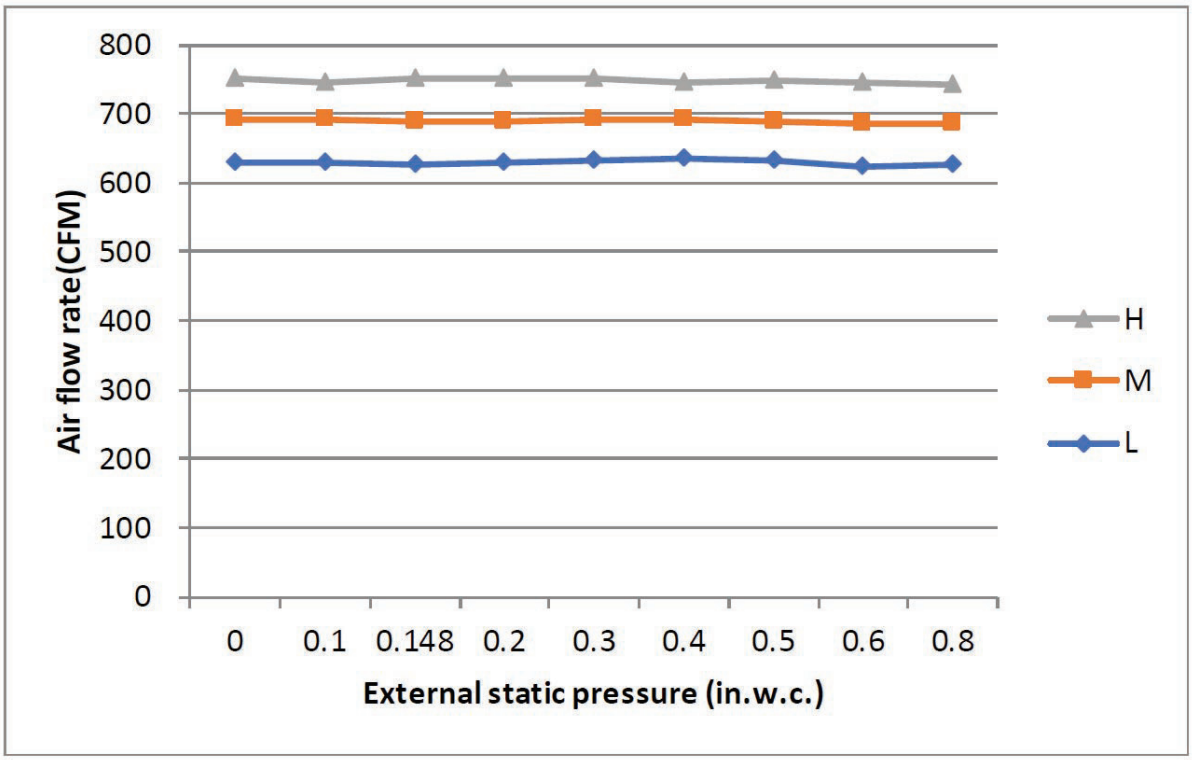

COOLING	Default	-1	-2	-3	-4	-5	-6	-7	-8	-9	-10
TURBO	988	804	784	764	744	724	704	684	664	644	624
HIGH	894	739	719	699	679	659	639	619	599	579	559
MIDDLE	806	674	654	634	614	594	574	554	534	514	494
LOW	712	609	589	569	549	529	509	489	469	449	429
COOLING	Default	-11	-12	-13	-14	-15	-16	-17	-18	-19~-40	+1
TURBO	988	604	584	564	544	524	504	484	464	453	844
HIGH	894	539	519	499	479	459	439	435	435	435	779
MIDDLE	806	474	454	434	418	418	418	418	418	418	714
LOW	712	409	400	400	400	400	400	400	400	400	649
COOLING	Default	+2	+3	+4	+5	+6	+7	+8	+9~+20		
TURBO	988	853	853	853	853	853	853	853	853		
HIGH	894	799	819	835	835	835	835	835	835		
MIDDLE	806	734	754	774	794	814	818	818	818		
LOW	712	669	689	709	729	749	769	789	800		

HEATING	Default	-1	-2	-3	-4	-5	-6	-7	-8	-9	-10	-11
TURBO	788	768	748	728	708	688	668	648	628	608	588	568
HIGH	753	733	713	693	673	653	633	613	593	573	553	533
MIDDLE	641	621	601	581	561	541	521	501	481	461	441	421
LOW	524	504	484	464	444	424	404	400	400	400	400	400
HEATING	Default	-12	-13	-14	-15	-16	-17~-40	+1	+2	+3	+4	+5
TURBO	788	548	528	508	488	468	453	808	828	848	853	853
HIGH	753	513	493	473	453	435	435	773	793	813	833	835
MIDDLE	641	418	418	418	418	418	418	661	681	701	721	741
LOW	524	400	400	400	400	400	400	544	564	584	604	624
HEATING	Default	+6	+7	+8	+9	+10	+11	+12	+13	+14~+20		
TURBO	788	853	853	853	853	853	853	853	853	853		
HIGH	753	835	835	835	835	835	835	835	835	835		
MIDDLE	641	761	781	801	818	818	818	818	818	818		
LOW	524	644	664	684	704	724	744	764	784	800		

30K

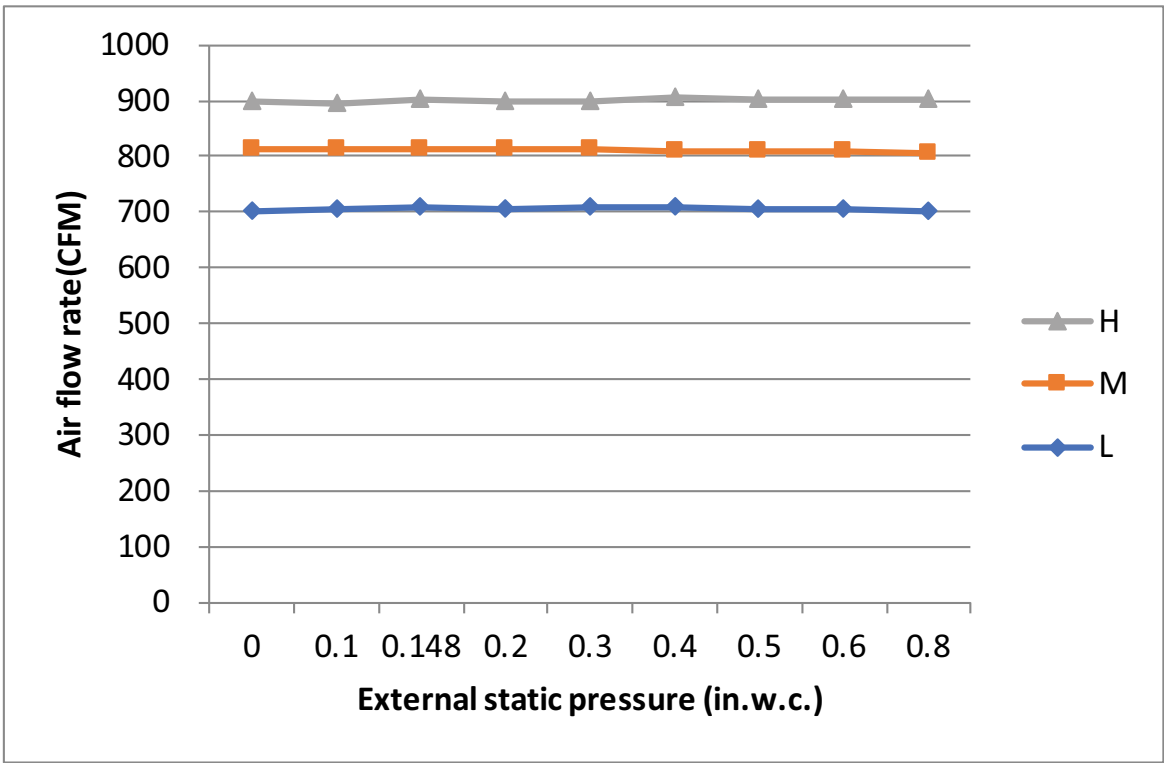

COOLING	Default	-1	-2	-3	-4	-5	-6	-7	-8	-9	-10	-11
TURBO	988	968	948	928	908	888	868	848	828	808	788	768
HIGH	894	874	854	834	814	794	774	754	734	714	694	674
MIDDLE	806	786	766	746	726	706	686	666	646	626	606	586
LOW	712	692	672	652	632	612	592	572	552	532	512	492
COOLING	Default	-12	-13	-14	-15	-16	-17	-18	-19	-20	-21	-22
TURBO	988	748	728	708	688	668	648	628	608	588	568	548
HIGH	894	654	634	614	594	574	554	534	514	494	474	454
MIDDLE	806	566	546	526	506	486	466	446	426	418	418	418
LOW	712	472	452	432	412	400	400	400	400	400	400	400
COOLING	Default	-23	-24	-25	-26	+1	+2	+3	+4	+5	+6	+7
TURBO	988	528	508	488	468	988	1008	1028	1048	1068	1071	1071
HIGH	894	435	435	435	435	894	914	934	954	974	994	1014
MIDDLE	806	418	418	418	418	806	826	846	866	886	906	926
LOW	712	400	400	400	400	712	732	752	772	792	812	832
COOLING	Default	+8	+9	+10	+11	+12	+13	+14	+15	+16	+17~+20	
TURBO	988	1071	1071	1071	1071	1071	1071	1071	1071	1071	1071	
HIGH	894	1034	1053	1053	1053	1053	1053	1053	1053	1053	1053	
MIDDLE	806	946	966	986	1006	1026	1035	1035	1035	1035	1035	
LOW	712	852	872	892	912	932	952	972	992	1012	1018	

30K (CONT)

HEATING	Default	-1	-2	-3	-4	-5	-6	-7	-8	-9	-10
TURBO	918	898	878	858	838	818	798	778	758	738	718
HIGH	876	856	836	816	796	776	756	736	716	696	676
MIDDLE	665	645	625	605	585	565	545	525	505	485	465
LOW	453	433	413	400	400	400	400	400	400	400	400
HEATING	Default	-11	-12	-13	-14	-15	-16	-17	-18	-19	-20
TURBO	918	698	678	658	638	618	598	578	558	538	518
HIGH	876	656	636	616	596	576	556	536	516	496	476
MIDDLE	665	445	425	418	418	418	418	418	418	418	418
LOW	453	400	400	400	400	400	400	400	400	400	400
HEATING	Default	-21	-22	-23	-24~-40	+1	+2	+3	+4	+5	+6
TURBO	918	498	478	458	453	938	958	978	998	1018	1038
HIGH	876	456	436	435	435	896	916	936	956	976	996
MIDDLE	665	418	418	418	418	685	705	725	745	765	785
LOW	453	400	400	400	400	473	493	513	533	553	573
HEATING	Default	+7	+8	+9	+10	+11	+12	+13	+14~+20		
TURBO	918	1058	1071	1071	1071	1071	1071	1071	1071		
HIGH	876	1016	1036	1053	1053	1053	1053	1053	1053		
MIDDLE	665	805	825	845	865	885	905	925	945		
LOW	453	593	613	633	653	673	693	713	733		

Manufacturer reserves the right to change, at any time, specifications and designs without notice and without obligations.

36K

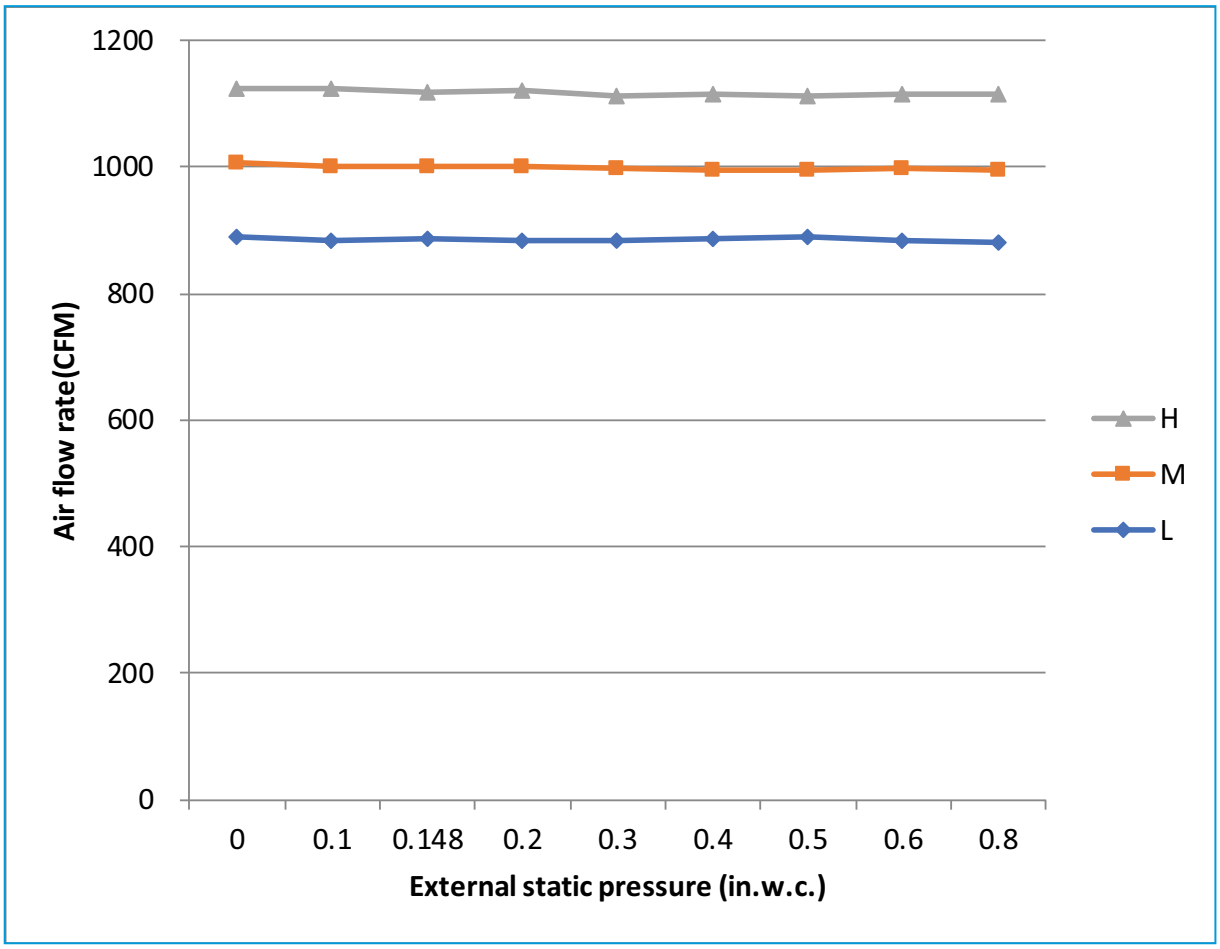

COOLING	Default	-1	-2	-3	-4	-5	-6	-7	-8	-9	-10	-11	-12
TURBO	1188	1168	1148	1128	1108	1088	1068	1048	1028	1008	988	968	948
HIGH	1082	1062	1042	1022	1002	982	962	942	922	902	882	862	842
MIDDLE	971	951	931	911	891	871	851	831	811	791	771	751	731
LOW	865	845	825	805	785	765	745	725	705	685	665	645	625
COOLING	Default	-13	-14	-15	-16	-17	-18	-19	-20	-21	-22	-23	-24
TURBO	1188	928	908	888	868	848	828	808	788	768	748	728	708
HIGH	1082	822	802	782	762	742	722	702	682	662	642	622	602
MIDDLE	971	711	691	671	651	631	611	591	571	551	531	511	491
LOW	865	605	585	565	545	525	505	485	465	445	425	405	400
COOLING	Default	-25	-26	-27	-28	-29	-30	-31	-32	-33	-34	-35	-36
TURBO	1188	688	668	648	628	608	588	568	548	528	508	488	468
HIGH	1082	582	562	542	522	502	482	462	442	435	435	435	435
MIDDLE	971	471	451	431	418	418	418	418	418	418	418	418	418
LOW	865	400	400	400	400	400	400	400	400	400	400	400	400
COOLING	Default	-37~-40	+1	+2	+3	+4	+5	+6	+7	+8	+9	+10	+11
TURBO	1188	453	1208	1228	1248	1268	1288	1288	1288	1288	1288	1288	1288
HIGH	1082	435	1102	1122	1142	1162	1182	1202	1222	1242	1262	1271	1271
MIDDLE	971	418	991	1011	1031	1051	1071	1091	1111	1131	1151	1171	1191
LOW	865	400	885	905	925	945	965	985	1005	1025	1045	1065	1085
COOLING	Default	+12	+13	+14	+15	+16	+17	+18	+19~+20				
TURBO	1188	1288	1288	1288	1288	1288	1288	1288	1288				
HIGH	1082	1271	1271	1271	1271	1271	1271	1271	1271				
MIDDLE	971	1211	1231	1251	1253	1253	1253	1253	1253				
LOW	865	1105	1125	1145	1165	1185	1205	1225	1235				

Manufacturer reserves the right to change, at any time, specifications and designs without notice and without obligations.

36K CONT

HEATING	Default	-1	-2	-3	-4	-5	-6	-7	-8	-9	-10	-11
TURBO	1112	1092	1072	1052	1032	1012	992	972	952	932	912	892
HIGH	1059	1039	1019	999	979	959	939	919	899	879	859	839
MIDDLE	794	774	754	734	714	694	674	654	634	614	594	574
LOW	582	562	542	522	502	482	462	442	422	402	400	400
HEATING	Default	-12	-13	-14	-15	-16	-17	-18	-19	-20	-21	-22
TURBO	1112	872	852	832	812	792	772	752	732	712	692	672
HIGH	1059	819	799	779	759	739	719	699	679	659	639	619
MIDDLE	794	554	534	514	494	474	454	434	418	418	418	418
LOW	582	400	400	400	400	400	400	400	400	400	400	400
HEATING	Default	-23	-24	-25	-26	-27	-28	-29	-30	-31	-32	-33~-40
TURBO	1112	652	632	612	592	572	552	532	512	492	472	453
HIGH	1059	599	579	559	539	519	499	479	459	439	435	435
MIDDLE	794	418	418	418	418	418	418	418	418	418	418	418
LOW	582	400	400	400	400	400	400	400	400	400	400	400
HEATING	Default	+1	+2	+3	+4	+5	+6	+7	+8	+9	+10	+11
TURBO	1112	1132	1152	1172	1192	1212	1232	1252	1272	1288	1288	1288
HIGH	1059	1079	1099	1119	1139	1159	1179	1199	1219	1239	1259	1271
MIDDLE	794	814	834	854	874	894	914	934	954	974	994	1014
LOW	582	602	622	642	662	682	702	722	742	762	782	802
HEATING	Default	+12	+13	+14	+15	+16	+17	+18	+19	+20		
TURBO	1112	1288	1288	1288	1288	1288	1288	1288	1288	1288		
HIGH	1059	1271	1271	1271	1271	1271	1271	1271	1271	1271		
MIDDLE	794	1034	1054	1074	1094	1114	1134	1154	1174	1194		
LOW	582	822	842	862	882	902	922	942	962	982		

Manufacturer reserves the right to change, at any time, specifications and designs without notice and without obligations.

48K

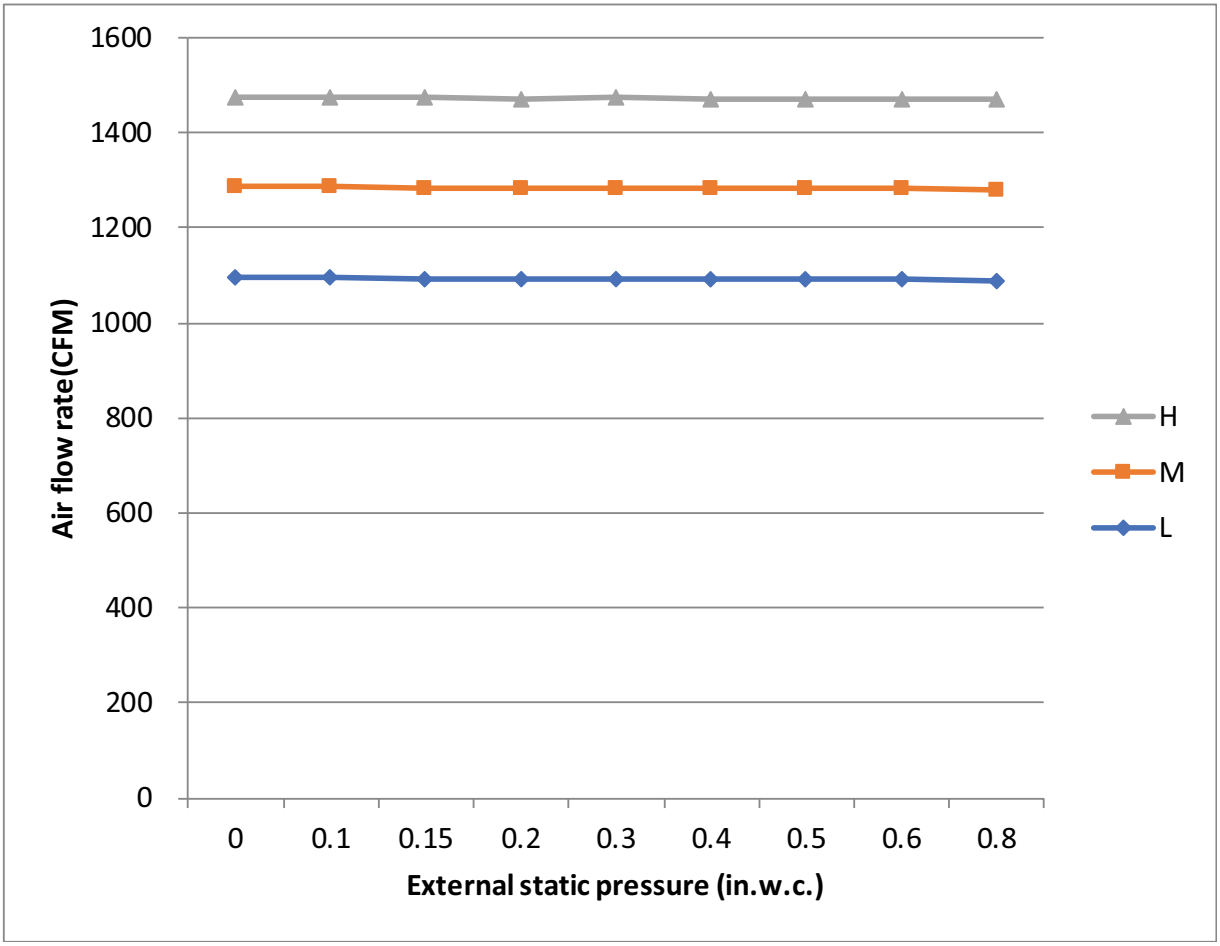

COOLING	Default	-1	-2	-3	-4	-5	-6	-7	-8	-9	-10
TURBO	1600	1566	1532	1498	1464	1430	1396	1362	1328	1294	1260
HIGH	1471	1437	1403	1369	1335	1301	1267	1233	1199	1165	1131
MIDDLE	1282	1248	1214	1180	1146	1112	1078	1044	1010	976	942
LOW	1094	1060	1026	992	958	924	890	856	822	790	790
COOLING	Default	-11	-12	-13	-14	-15	-16	-17	-18	-19	-20
TURBO	1600	1226	1192	1158	1124	1090	1056	1022	988	954	920
HIGH	1471	1097	1063	1029	995	961	927	893	859	850	850
MIDDLE	1282	908	874	840	820	820	820	820	820	820	820
LOW	1094	790	790	790	790	790	790	790	790	790	790
COOLING	Default	-21	-22	-23	-24	-25	-26	-27	-28	-29	-30
TURBO	1600	880	880	880	880	880	880	880	880	880	880
HIGH	1471	850	850	850	850	850	850	850	850	850	850
MIDDLE	1282	820	820	820	820	820	820	820	820	820	820
LOW	1094	790	790	790	790	790	790	790	790	790	790
COOLING	Default	-31	-32	-33	-34	-35	-36	-37	-38	-39	-40
TURBO	1600	880	880	880	880	880	880	880	880	880	886
HIGH	1471	850	850	850	850	850	850	850	850	850	850
MIDDLE	1282	820	820	820	820	820	820	820	820	820	820
LOW	1094	790	790	790	790	790	790	790	790	790	790
COOLING	Default	+1	+2	+3	+4	+5	+6	+7	+8	+9	+10
TURBO	1600	1634	1668	1702	1736	1770	1804	1838	1872	1906	1940
HIGH	1471	1505	1539	1573	1607	1641	1675	1709	1743	1777	1811
MIDDLE	1282	1316	1350	1384	1418	1452	1486	1520	1554	1588	1622
LOW	1094	1128	1162	1196	1230	1264	1298	1332	1366	1400	1434
COOLING	Default	+11	+12	+13	+14	+15	+16	+17	+18	+19	+20
TURBO	1600	1974	2008	2042	2076	2110	2144	2178	2212	2246	2280
HIGH	1471	1845	1879	1913	1947	1981	2015	2049	2083	2117	2151
MIDDLE	1282	1656	1690	1724	1758	1792	1826	1860	1894	1928	1962
LOW	1094	1468	1502	1536	1570	1604	1638	1672	1706	1740	1774

Manufacturer reserves the right to change, at any time, specifications and designs without notice and without obligations.

48K CONT

HEATING	Default	-1	-2	-3	-4	-5	-6	-7	-8	-9	-10
TURBO	1600	1566	1532	1498	1464	1430	1396	1362	1328	1294	1260
HIGH	1382	1348	1314	1280	1246	1212	1178	1144	1110	1076	1042
MIDDLE	1141	1107	1073	1039	1005	971	937	903	869	835	820
LOW	977	943	909	875	841	807	790	790	790	790	790
HEATING	Default	-11	-12	-13	-14	-15	-16	-17	-18	-19	-20
TURBO	1600	1226	1192	1158	1124	1090	1056	1022	988	954	920
HIGH	1382	1008	974	940	906	872	850	850	850	850	850
MIDDLE	1141	820	820	820	820	820	820	820	820	820	820
LOW	977	790	790	790	790	790	790	790	790	790	790
HEATING	Default	-21	-22	-23	-24	-25	-26	-27	-28	-29	-30
TURBO	1600	886	880	880	880	880	880	880	880	880	880
HIGH	1382	850	850	850	850	850	850	850	850	850	850
MIDDLE	1141	820	820	820	820	820	820	820	820	820	820
LOW	977	790	790	790	790	790	790	790	790	790	790
HEATING	Default	-31	-32	-33	-34	-35	-36	-37	-38	-39	-40
TURBO	1600	880	880	880	880	880	880	880	880	880	880
HIGH	1382	850	850	850	850	850	850	850	850	850	850
MIDDLE	1141	820	820	820	820	820	820	820	820	820	820
LOW	977	790	790	790	790	790	790	790	790	790	790
HEATING	Default	+1	+2	+3	+4	+5	+6	+7	+8	+9	+10
TURBO	1600	1634	1668	1702	1736	1770	1804	1838	1872	1906	1940
HIGH	1382	1416	1450	1484	1518	1552	1586	1620	1654	1688	1722
MIDDLE	1141	1175	1209	1243	1277	1311	1345	1379	1413	1447	1481
LOW	977	1011	1045	1079	1113	1147	1181	1215	1249	1283	1317
HEATING	Default	+11	+12	+13	+14	+15	+16	+17	+18	+19	+20
TURBO	1600	1974	2008	2042	2076	2110	2144	2178	2212	2246	2280
HIGH	1382	1756	1790	1824	1858	1892	1926	1960	1994	2028	2062
MIDDLE	1141	1515	1549	1583	1617	1651	1685	1719	1753	1787	1821
LOW	977	1351	1385	1419	1453	1487	1521	1555	1589	1623	1657

Manufacturer reserves the right to change, at any time, specifications and designs without notice and without obligations.

60K

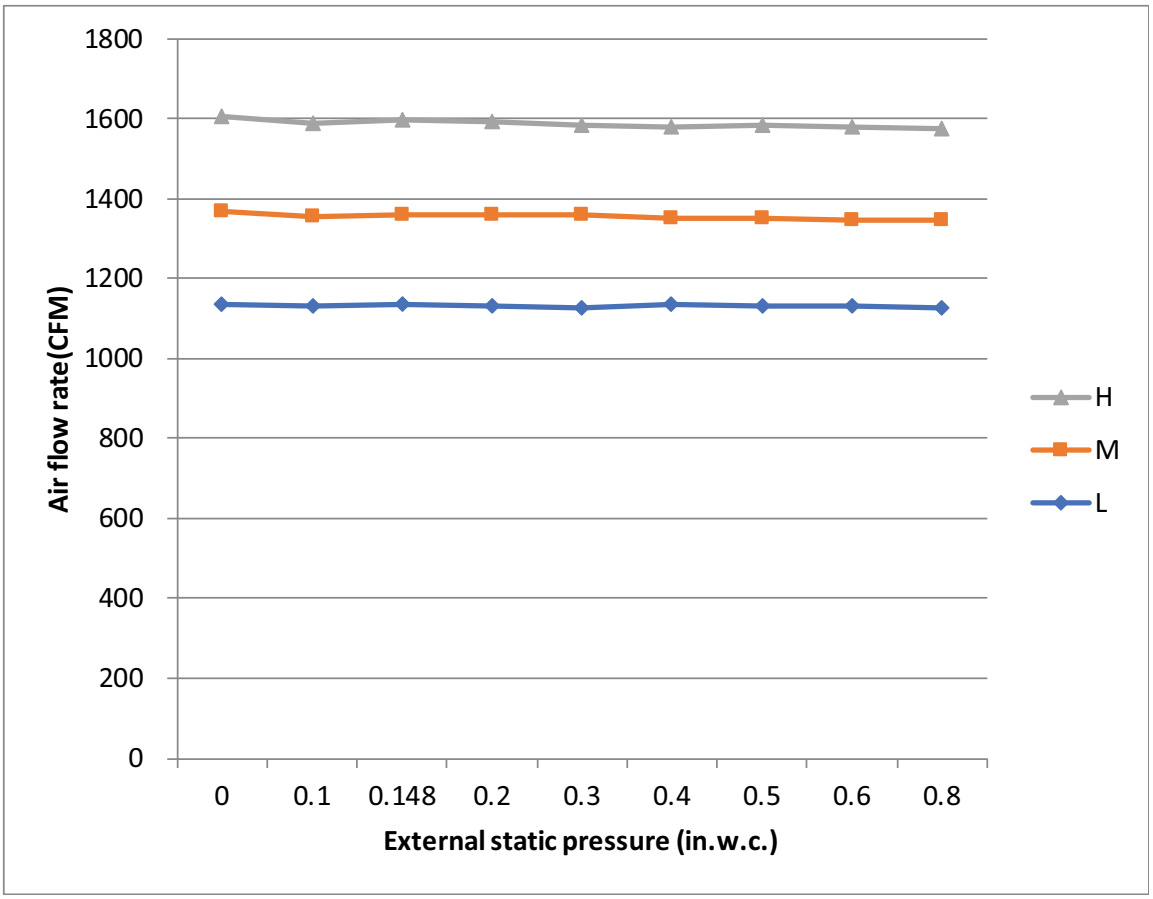

COOLING	Default	-1	-2	-3	-4	-5	-6	-7	-8	-9	-10
TURBO	1806	1786	1766	1746	1726	1706	1686	1666	1646	1626	1606
HIGH	1582	1562	1542	1522	1502	1482	1462	1442	1422	1402	1382
MIDDLE	1359	1339	1319	1299	1279	1259	1239	1219	1199	1179	1159
LOW	1135	1115	1095	1075	1055	1035	1015	995	975	955	935
COOLING	Default	-11	-12	-13	-14	-15	-16	-17	-18	-19	-20
TURBO	1806	1586	1566	1546	1526	1506	1486	1466	1446	1426	1406
HIGH	1582	1362	1342	1322	1302	1282	1262	1242	1222	1202	1182
MIDDLE	1359	1139	1119	1099	1079	1059	1039	1019	999	979	959
LOW	1135	915	895	875	855	835	815	795	775	755	735
COOLING	Default	-21	-22	-23	-24	-25	-26	-27	-28	-29	-30
TURBO	1806	1386	1366	1346	1326	1306	1286	1266	1246	1226	1206
HIGH	1582	1162	1142	1122	1102	1082	1062	1042	1022	1002	982
MIDDLE	1359	939	919	899	879	859	839	819	799	779	759
LOW	1135	715	695	694	694	694	694	694	694	694	694
COOLING	Default	-31	-32	-33	-34	-35	-36	-37	-38	-39	-40
TURBO	1806	1186	1166	1146	1126	1106	1086	1066	1046	1026	1006
HIGH	1582	962	942	922	902	882	862	842	822	802	782
MIDDLE	1359	739	719	712	712	712	712	712	712	712	712
LOW	1135	694	694	694	694	694	694	694	694	694	694
COOLING	Default	+1	+2	+3	+4	+5	+6	+7	+8	+9	+10
TURBO	1806	1826	1846	1866	1886	1906	1926	1946	1966	1986	2006
HIGH	1582	1602	1622	1642	1662	1682	1702	1722	1742	1762	1782
MIDDLE	1359	1379	1399	1419	1439	1459	1479	1499	1519	1539	1559
LOW	1135	1155	1175	1195	1215	1235	1255	1275	1295	1315	1335
COOLING	Default	+11	+12	+13	+14	+15	+16	+17	+18	+19	+20
TURBO	1806	2026	2046	2066	2086	2106	2126	2146	2153	2153	2153
HIGH	1582	1802	1822	1842	1862	1882	1902	1922	1942	1962	1982
MIDDLE	1359	1579	1599	1619	1639	1659	1679	1699	1719	1739	1759
LOW	1135	1355	1375	1395	1415	1435	1455	1475	1495	1515	1535

Manufacturer reserves the right to change, at any time, specifications and designs without notice and without obligations.

60K CONT

HEATING	Default	-1	-2	-3	-4	-5	-6	-7	-8	-9	-10
TURBO	1659	1639	1619	1599	1579	1559	1539	1519	1499	1479	1459
HIGH	1582	1562	1542	1522	1502	1482	1462	1442	1422	1402	1382
MIDDLE	1247	1227	1207	1187	1167	1147	1127	1107	1087	1067	1047
LOW	976	956	936	916	896	876	856	836	816	796	776
HEATING	Default	-11	-12	-13	-14	-15	-16	-17	-18	-19	-20
TURBO	1659	1439	1419	1399	1379	1359	1339	1319	1299	1279	1259
HIGH	1582	1362	1342	1322	1302	1282	1262	1242	1222	1202	1182
MIDDLE	1247	1027	1007	987	967	947	927	907	887	867	847
LOW	976	756	736	716	696	694	694	694	694	694	694
HEATING	Default	-21	-22	-23	-24	-25	-26	-27	-28	-29	-30
TURBO	1659	1239	1219	1199	1179	1159	1139	1119	1099	1079	1059
HIGH	1582	1162	1142	1122	1102	1082	1062	1042	1022	1002	982
MIDDLE	1247	827	807	787	767	747	727	712	712	712	712
LOW	976	694	694	694	694	694	694	694	694	694	694
HEATING	Default	-31	-32	-33	-34	-35	-36	-37	-38	-39	-40
TURBO	1659	1039	1019	999	979	959	939	919	899	879	859
HIGH	1582	962	942	922	902	882	862	842	822	802	782
MIDDLE	1247	712	712	712	712	712	712	712	712	712	712
LOW	976	694	694	694	694	694	694	694	694	694	694
HEATING	Default	+1	+2	+3	+4	+5	+6	+7	+8	+9	+10
TURBO	1659	1679	1699	1719	1739	1759	1779	1799	1819	1839	1859
HIGH	1582	1602	1622	1642	1662	1682	1702	1722	1742	1762	1782
MIDDLE	1247	1267	1287	1307	1327	1347	1367	1387	1407	1427	1447
LOW	976	996	1016	1036	1056	1076	1096	1116	1136	1156	1176
HEATING	Default	+11	+12	+13	+14	+15	+16	+17	+18	+19	+20
TURBO	1659	1879	1899	1919	1939	1959	1979	1999	2019	2039	2059
HIGH	1582	1802	1822	1842	1862	1882	1902	1922	1942	1962	1982
MIDDLE	1247	1467	1487	1507	1527	1547	1567	1587	1607	1627	1647
LOW	976	1196	1216	1236	1256	1276	1296	1316	1336	1356	1376

Manufacturer reserves the right to change, at any time, specifications and designs without notice and without obligations.

TROUBLESHOOTING

Table 16 — Error Codes

Display	Malfunction and Protection Indication
EC07	ODU Fan Speed Out of Control
EC51	ODU EEPROM Parameter Error
EC52	ODU Coil Temperature Sensor(T3) error
EC53	ODU Ambient Temperature Sensor (T4) Error
EC54	COMP. Discharge Temperature Sensor (TP) Error
EC56	IDU Coil Temperature Sensor (T2B) Error
ECC1	Other IDU Refrigerant Sensor Detects Leakage (Multi-zone)*
EH00	IDU EEPROM Malfunction
EH03	IDU Fan Speed Out of Control
EH0A	IDU EEPROM Parameter Error
EH0E	Water Level Alarm Malfunction
EH12	Main Unit or Secondary Units Malfunction
EH3A	External Fan DC bus voltage is too low protection
EH3b	External Fan DC bus voltage is too high fault
EH60	IDU Room Temperature (T1) Error
EH61	IDU Coil Temperature Sensor (T2) Error
EHba	Communication Error between the indoor unit and the external fan module
EHC1	Refrigerant Sensor Detects Leakage
EHC2	Refrigerant Sensor is out of range and a leak is detected
EHC3	Refrigerant Sensor is out of range*
EL01	IDU and ODU Communication Error
ELOC	System lacks refrigerant
EL11	Communication Malfunction between the main and secondary units
FH07	IDU lift panel communication failure/IDU opening and closing failure
FHCC	Refrigerant Sensor Error*
PC00	ODU IPM Module Protection
PC01	ODU Voltage Protection
PC02	Compressor To (or IPM Module Protection
PC03	Pressure Protection (Low or High Pressure)
PC04	Inverter Compressor Drive Error
PCOL	Low Ambient Temperate Protection
NOTE: The digital tube will display **FC** in the **FORCED COOLING** mode. **FC is NOT an error code.** *Applicable to the units with refrigerant sensors only.	

Table 17 — Refrigerant Leak Detection Error Codes

EHC1	Refrigerant Sensor detects a leak
EHC2	Working condition of the refrigerant sensor is out of range and a leak is detected

If you receive one of the codes in Table 17, call a technician as soon as possible. No need to panic, the unit goes into TURBO mode until the error code clears. There is a “beeping” noise coming from the indoor unit, which is normal in this case.

For additional diagnostic information, refer to the Service Manual.

COMMON ISSUES

Table 18 — Common Issues

ISSUE	POSSIBLE CAUSE
Unit does not turn on when pressing **ON/OFF**.	The Unit has a 3-minute protection feature that prevents the unit from overloading. The unit cannot be restarted within three minutes of being turned off.
The unit changes from **COOL/HEAT** mode to **FAN** mode	The unit may change its setting to prevent frost from forming on the unit. Once the temperature increases, the unit starts operating in the previously selected mode again. The set temperature has been reached, at which point the unit turns off the compressor. The unit continues operating when the temperature fluctuates again.
The indoor unit emits white mist	In humid regions, a large temperature difference between the room's air and the conditioned air can cause white mist.
Both the indoor and outdoor units emit white mist	When the unit restarts in **HEAT** mode after defrosting, white mist may be emitted due to moisture generated from the defrosting process.
The indoor unit makes noises	A rushing air sound may occur when the louver resets its position. A squeaking sound may occur after running the unit in **HEAT** mode due to expansion and contraction of the unit's plastic parts.
Both the indoor unit and outdoor unit make noises	Low hissing sound during operation: This is normal and is caused by refrigerant gas flowing through both indoor and outdoor units.
	Low hissing sound when the system starts, has just stopped running, or is defrosting: This noise is normal and is caused by the refrigerant gas stopping or changing direction.
	Squeaking sound: Normal expansion and contraction of plastic and metal parts caused by temperature changes during operation can cause squeaking noises.
The outdoor unit makes noises	The unit makes different sounds based on its current operating mode.
Dust is emitted from either the indoor or outdoor unit	The unit may accumulate dust during extended periods of non-use, which emits when the unit is turned on. This can be mitigated by covering the unit during long periods of inactivity.
The unit emits a bad odor	The unit may absorb odors from the environment (such as furniture, cooking, cigarettes, etc.) which emit during operations.
	The unit's filters have become moldy and should be cleaned.
The fan of the outdoor unit does not operate	During operation, the fan speed is controlled to optimize product operation.
Operation is erratic, unpredictable, or unit is unresponsive	Interference from cell phone towers and remote boosters may cause the unit to malfunction. In this case, try the following: • Disconnect the power, then reconnect. • Press **ON/OFF** on the remote control to restart operation.

NOTE: If problem persists, contact a local dealer or your nearest customer service center. Provide them with a detailed description of the unit malfunction as well as your model number.

⚠ CAUTION

When troubles occur, check the following points before contacting a repair company.

Table 19 — Common Issues

PROBLEM	POSSIBLE CAUSES	SOLUTION
Poor Cooling Performance	Temperature setting may be higher than ambient room temperature	Lower the temperature setting
	The heat exchanger on the indoor or outdoor unit is dirty	Use Clean function by remote control to clean the affected heat exchanger
	The air filter is dirty	Remove the filter and clean it according to instructions
	The air inlet or outlet of either unit is blocked	Turn the unit off, remove the obstruction and turn it back on
	Doors and windows are open	Make sure that all doors and windows are closed while operating the unit
	Excessive heat is generated by sunlight	Close windows and curtains during periods of high heat or bright sunshine
	Too many sources of heat in the room (people, computers, electronics, etc.)	Reduce amount of heat sources
	Low refrigerant due to leak or long-term use	Check for leaks, re-seal if necessary and top off refrigerant
	SILENCE function is activated (optional function)	**SILENCE** function can lower product performance by reducing operating frequency. Turn off **SILENCE** function.
The unit is not working	Power failure	Wait for the power to be restored
	The power is turned off	Turn on the power
	The fuse is burned out	Call service center to replace the fuse
	Remote control batteries are dead	Replace batteries
	The Unit's 3-minute protection has been activated	Wait three minutes after restarting the unit
	Timer is activated	Turn timer off
The unit starts and stops frequently	There's too much or too little refrigerant in the system	Call a service center to check for leaks and recharge the system with refrigerant.
	Incompressible gas or moisture has entered the system.	Call a service center to evacuate and recharge the system with refrigerant
	The compressor is broken	Call a service center to replace the compressor
	The voltage is too high or too low	Install a manostat to regulate the voltage
Poor heating performance	The outdoor temperature is extremely low	Use auxiliary heating device
	Cold air is entering through doors and windows	Ensure all doors and windows are closed during use
	Low refrigerant due to leak or long-term use	Call service center to check for leaks, re-seal if necessary and top off refrigerant
Indicator lamps continue flashing	The unit may stop operation or continue to run safely. If the indicator lamps continue to flash or error codes appear, wait for about 10 minutes. The problem may resolve itself. If not, disconnect the power, then connect it again. Turn the unit on. If the problem persists, disconnect the power and contact your nearest customer service center.	
Error code appears and begins with the letters as the following in the window display of the indoor unit: E(x), P(x), F(x) EH(xx), EL(xx), EC(xx) PH(xx), PL(xx), PC(xx)		

NOTE: If your problem persists after performing the checks and diagnostics above, turn off your unit immediately and contact an authorized service center.

DUCTLESS START-UP CHECKLIST - Single Zone

Installation Data

Site Address:_____

City:_____ **State:**_____ **Zip Code:**_____

Installing Contractor:_____ **Contractor Contact #:** ( ) _____-_____

Job Name:_____ **Start-up Date:**_____

Distributor:_____

System Details

UNITS	MODEL NO.	SERIAL NO.	CONTROLLER
OUTDOOR UNIT			
INDOOR UNIT A			

Are the outdoor unit and indoor unit compatible? YES:_____ NO:_____

Wiring Electrical

Wire Size and Type Used? AWG:_____ TYPE:_____

Are there any breaks, splices, wire nuts or butt connectors between the outdoor unit and the indoor unit? YES:_____ NO:_____

Was the wiring from the outdoor unit port to the correct indoor unit verified? YES:_____ NO:_____

REMARKS:_____

_____

Voltage Check

Wiring: Single Zone

Outdoor Unit Disconnect	1(L1):GND		Outdoor Unit Terminal Block	1(L1):GND		NOTES:_____
	2(L2):GND			2(L2):GND		
	1(L1):L2(2)			1(L1):2(L2)		
Indoor Unit Voltage Check @ Outdoor Unit	1(L1):GND		Indoor Unit Voltage Check @ Indoor Unit	1(L1):GND		NOTES:_____
	2(L2):GND			2(L2):GND		
	1(L1):2(L2)			1(L1):2(L2)		
	2(L2):3(S)			2(L2):3(S)		

Outdoor Unit Disconnect	1(L1):GND		Outdoor Unit Terminal Block	1(L1):GND		NOTES:_____
	2(L2):GND			2(L2):GND		
	1(L1):L2(2)			1(L1):2(L2)		
Indoor Unit Voltage Check @ Outdoor Unit	1(L1):GND		Indoor Unit Voltage Check @ Indoor Unit	1(L1):GND		NOTES:_____
	2(L2):GND			2(L2):GND		
	1(L1):2(L2)			1(L1):2(L2)		
	2(L2):3(S)			2(L2):3(S)		

Manufacturer reserves the right to change, at any time, specifications and designs without notice and without obligations.

Ductless Start-Up Checklist (CONT)

Piping

Leak Check:
System held 500 psig (max. 550psi) for a minimum of 30 minutes using dry nitrogen. YES:_____ NO:_____

Evacuation Method:
- Was the Triple Evacuation Method used as outlined in the installation manual? YES:_____ NO:_____
- Was the Deep Vacuum Method used as outlined in the installation manual? YES:_____ NO:_____
- Did the System Hold 500 microns for 1 hour? YES:_____ NO:_____
- Does the line set match the diameter of the evaporator connections? YES:_____ NO:_____
- For Conventional Fan Coils, does the line set match the outdoor unit size? YES:_____ NO:_____

Single Zone Piping:
Has the liquid pipe length been measured and the additional charge calculated? Size:_____ Length:_____ Charge:_____

NOTES:

NOTE: Final Charge Amount must be recorded!

PORT	LIQUID SIZE		SUCTION SIZE		LENGTH	CHARGE	NOTES:_____
A							

Performance Check

For 1:1 Single Zone Systems: Adjust the set-point to create an operational call for the desired testing operation. Allow the system to run for a minimum of 10 min. and record the following details:

(Operational data recorded on applicable heads with the wireless remote controller's Point Check function)

UNIT	SET-POINT	MODE	T1	T2	T3	T4	Tb	Tp	Th	LA/Lr
A										

NOTE:
- T1 - Ambient Space Temperature Sensor
- T2 - IDU Coil Temperature Sensor
- T3 - Outdoor Coil Temperature Sensor
- T4 - Outdoor Ambient Temperature
- Tb - Suction Line Temperature @PMV
- Tp - Discharge Temperature Sensor
- Th - IPM Board Temperature
- LA/Lr - PMV Temperature

Error Codes

Were there any error codes present at start-up? YES:_____ NO:_____

		Notes:
Indoor Unit Error Code:		
Outdoor Unit Error Code:		
Wall Controller:		
24V Interface:		

Comments:

_____

_____

© 2025 Carrier. All rights reserved.

Manufacturer reserves the right to change, at any time, specifications and designs without notice and without obligations.