48LC*04−06
Nominal 3 to 5 Tons
Single Package Rooftop
Gas Heating/Electric Cooling Unit
with Puron® (R−410A) Refrigerant

Carrier
turn to the experts

Service and Maintenance Instructions

TABLE OF CONTENTS

SAFETY CONSIDERATIONS 1
UNIT ARRANGEMENT AND ACCESS 2
SUPPLY FAN (BLOWER) SECTION 4
COOLING 6
PURON® (R-410A) REFRIGERANT 8
THERMOSTATIC EXPANSION VALVE (TXV) 9
COOLING CHARGING CHARTS 10
CONVENIENCE OUTLETS 14
SMOKE DETECTORS 15
PROTECTIVE DEVICES 22
GAS HEATING SYSTEM 23
ECONOMIZER SYSTEMS 34
COMFORTLINK (FACTORY OPTION) 34
RTU OPEN CONTROL SYSTEM 34
VFD OPERATION WITH REMOTE KEYPAD 34
WIRING DIAGRAMS 35
PRE-START-UP 38
START-UP, GENERAL 38
FASTENER TORQUE VALUES 40
APPENDIX I. MODEL NUMBER SIGNIFICANCE . 41
APPENDIX II. PHYSICAL DATA 42
APPENDIX III. FAN PERFORMANCE 44
UNIT START-UP CHECKLIST 49

SAFETY CONSIDERATIONS

Installation and servicing of air-conditioning equipment can be hazardous due to system pressure and electrical components. Only trained and qualified service personnel should install, repair, or service air-conditioning equipment. Untrained personnel can perform the basic maintenance functions of replacing filters. Trained service personnel should perform all other operations.

When working on air-conditioning equipment, observe precautions in the literature, tags and labels attached to the unit, and other safety precautions that may apply. Follow all safety codes. Wear safety glasses and work gloves. Use quenching cloth for unbrazing operations. Have fire extinguishers available for all brazing operations.

Follow all safety codes. Wear safety glasses and work gloves. Use quenching cloth for brazing operations. Have fire extinguisher available. Read these instructions thoroughly and follow all warnings or cautions attached to the unit. Consult local building codes and National Electrical Code (NEC) for special requirements.

Recognize safety information. This is the safety-alert symbol ⚠. When you see this symbol on the unit and in instructions or manuals, be alert to the potential for personal injury.

Understand the signal words DANGER, WARNING, and CAUTION. These words are used with the safety-alert symbol. DANGER identifies the most serious hazards which **will** result in severe personal injury or death. WARNING signifies a hazard which **could** result in personal injury or death. CAUTION is used to identify unsafe practices which **may** result in minor personal injury or product and property damage. NOTE is used to highlight suggestions which **will** result in enhanced installation, reliability, or operation.

⚠ WARNING

FIRE, EXPLOSION HAZARD

Failure to follow this warning could result in personal injury, death and/or property damage.

Refer to the User's Information Manual provided with this unit for more details.

Do not store or use gasoline or other flammable vapors and liquids in the vicinity of this or any other appliance.

What to do if you smell gas:

DO NOT try to light any appliance.
DO NOT touch any electrical switch, or use any phone in your building.
IMMEDIATELY call your gas supplier from a neighbor's phone. Follow the gas supplier's instructions.
If you cannot reach your gas supplier, call the fire department.

⚠ WARNING

ELECTRICAL OPERATION HAZARD

Failure to follow this warning could result in personal injury or death.

Before performing service or maintenance operations on unit, turn off main power switch to unit. Electrical shock and rotating equipment could cause injury.

⚠ WARNING

ELECTRICAL OPERATION HAZARD

Failure to follow this warning could result in personal injury or death.

Units with convenience outlet circuits may use multiple disconnects. Check convenience outlet for power status before opening unit for service. Locate its disconnect switch, if appropriate, and open it. Tag-out this switch, if necessary.

⚠ WARNING

UNIT OPERATION AND SAFETY HAZARD

Failure to follow this warning could cause personal injury, death and/or equipment damage.

Puron (R-410A) refrigerant systems operate at higher pressures than standard R-22 systems. Do not use R-22 service equipment or components on Puron refrigerant equipment.

⚠ WARNING

FIRE, EXPLOSION HAZARD

Failure to follow this warning could result in personal injury or death.

Disconnect gas piping from unit when pressure testing at pressure greater than 0.5 psig. Pressures greater than 0.5 psig will cause gas valve damage resulting in hazardous condition. If gas valve is subjected to pressure greater than 0.5 psig, it *must* be replaced before use. When pressure testing field-supplied gas piping at pressures of 0.5 psig or less, a unit connected to such piping must be isolated by closing the manual gas valve(s).

UNIT ARRANGEMENT AND ACCESS

General

Fig. 1 and Fig. 2 show general unit arrangement and access locations.

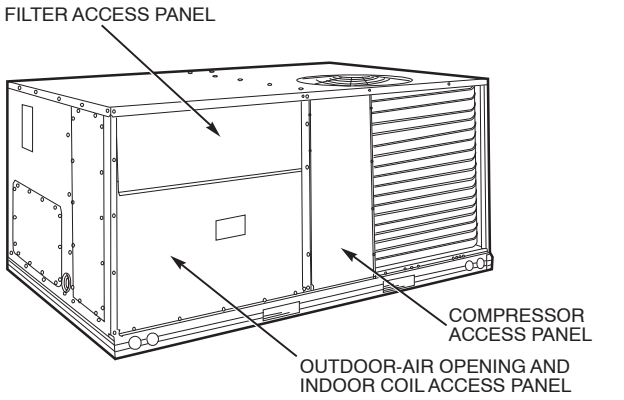

Fig. 1 - Typical Access Panel Locations

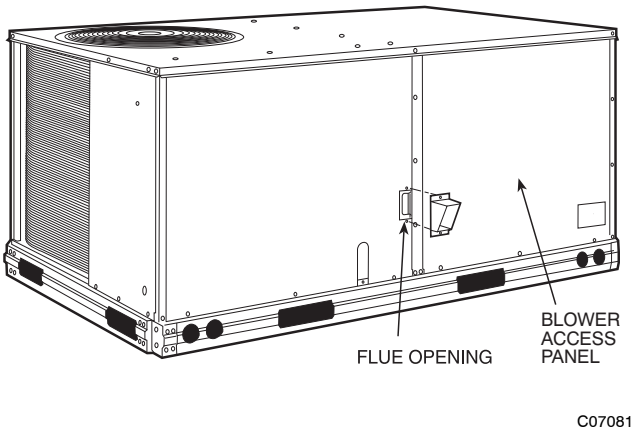

Fig. 2 - Blower Access Panel Location

Routine Maintenance

These items should be part of a routine maintenance program, to be checked every month or two, until a specific schedule for each can be identified for this installation:

Quarterly Inspection (and 30 days after initial start)

- Return air filter replacement
- Outdoor hood inlet filters cleaned
- Belt tension checked
- Belt condition checked
- Pulley alignment checked
- Fan shaft bearing locking collar tightness checked
- Condenser coil cleanliness checked
- Condensate drain checked

Seasonal Maintenance

These items should be checked at the beginning of each season (or more often if local conditions and usage patterns dictate):

Air Conditioning

- Condenser fan motor mounting bolts tightness
- Compressor mounting bolts
- Condenser fan blade positioning
- Control box cleanliness and wiring condition
- Wire terminal tightness
- Refrigerant charge level
- Evaporator coil cleaning
- Evaporator blower motor amperage

Heating

- Heat exchanger flue passageways cleanliness
- Gas burner condition
- Gas manifold pressure
- Heating temperature rise

Economizer or Outside Air Damper

- Inlet filters condition
- Check damper travel (economizer)
- Check gear and dampers for debris and dirt

Air Filters and Screens

Each unit is equipped with return air filters. If the unit has an economizer, it will also have an outside air screen. If a manual outside air damper is added, an inlet air screen will also be present.

Each of these filters and screens will need to be periodically replaced or cleaned.

Return Air Filters

Return air filters are disposable fiberglass media type. Access to the filters is through the small lift-out panel located on the rear side of the unit, above the evaporator/return air access panel. (See Fig. 1.)

To remove the filters:

1. Grasp the bottom flange of the upper panel.
2. Lift up and swing the bottom out until the panel disengages and pulls out.
3. Reach inside and extract the filters from the filter rack.
4. Replace these filters as required with similar replacement filters of same size.

To re-install the access panel:

1. Slide the top of the panel up under the unit top panel.
2. Slide the bottom into the side channels.
3. Push the bottom flange down until it contacts the top of the lower panel (or economizer top).

IMPORTANT: DO NOT OPERATE THE UNIT WITHOUT THESE FILTERS!

Outside Air Hood

Outside air hood inlet screens are permanent aluminum-mesh type filters. Check these for cleanliness. Remove the screens when cleaning is required. Clean by washing with hot low-pressure water and soft detergent and replace all screens before restarting the unit. Observe the flow direction arrows on the side of each filter frame.

Economizer Inlet Air Screen

This air screen is retained by spring clips under the top edge of the hood. (See Fig. 3.)

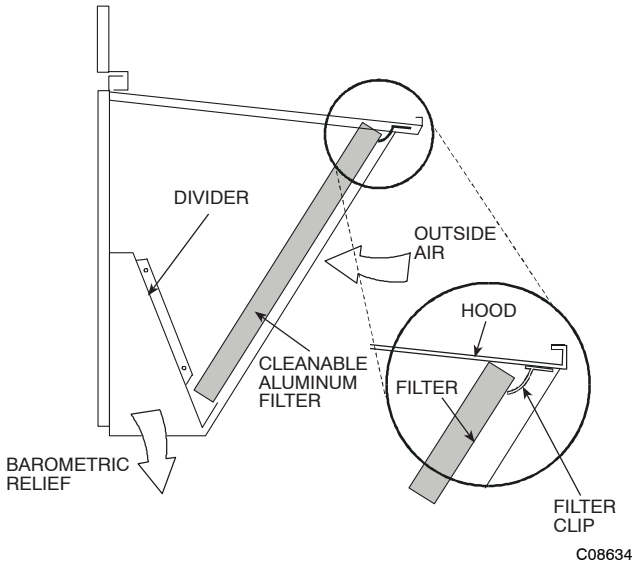

Fig. 3 - Filter Installation

To remove the filter, open the spring clips. Re-install the filter by placing the frame in its track, then closing the spring clips.

Manual Outside Air Hood Screen

This inlet screen is secured by a retainer angle across the top edge of the hood. (See Fig. 4.)

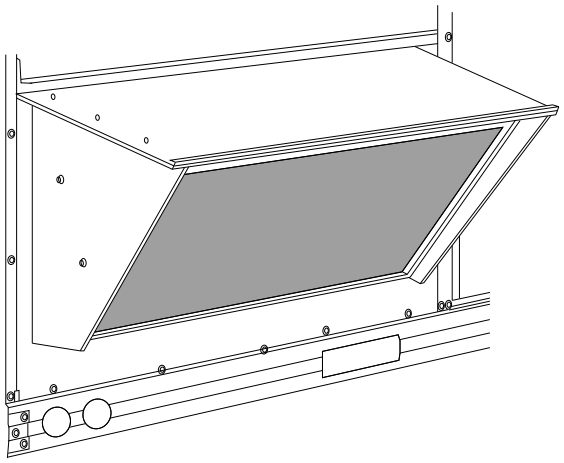

C14036

Fig. 4 - Screens Installed on Outdoor-Air Hood

To remove the screen, loosen the screws in the top retainer and slip the retainer up until the filter can be removed. Re-install by placing the frame in its track, rotating the retainer back down and tighten all screws.

SUPPLY FAN (BLOWER) SECTION

⚠ WARNING

ELECTRICAL SHOCK HAZARD

Failure to follow this warning could cause personal injury or death.

Before performing service or maintenance operations on the fan system, shut off all unit power and tag-out the unit disconnect switch. Do not reach into the fan section with power still applied to unit.

Supply Fan (Belt-Drive)

The supply fan system consists of a forward-curved centrifugal blower wheel on a solid shaft with two concentric type bearings, one on each side of the blower housing. A fixed-pitch driven pulley is attached to the fan shaft and an adjustable-pitch driver pulley is on the motor. The pulleys are connected using a "V" type belt. (See Fig. 5.)

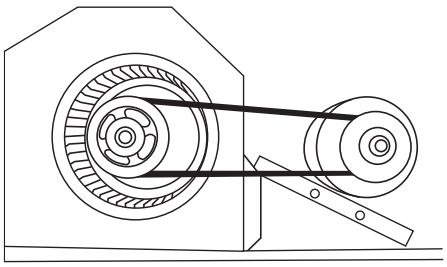

C07087

Fig. 5 - Belt Drive Motor Mounting

Belt

Check the belt condition and tension quarterly. Inspect the belt for signs of cracking, fraying or glazing along the inside surfaces. Check belt tension by using a spring-force tool (such as Browning's Part Number "Belt Tension Checker" or equivalent tool); tension should be 6-lbs at a 5/8-in. deflection when measured at the centerline of the belt span. This point is at the center of the belt when measuring the distance between the motor shaft and the blower shaft.

NOTE: Without the spring-tension tool, place a straight edge across the belt surface at the pulleys, then deflect the belt at mid-span using one finger to a 1/2-in. deflection.

Adjust belt tension by loosening the motor mounting plate front bolts and rear bolt and sliding the plate toward the fan (to reduce tension) or away from fan (to increase tension). Ensure the blower shaft and the motor shaft are parallel to each other (pulleys aligned). Tighten all bolts when finished.

To replace the belt:

1. Use a belt with same section type or similar size. Do not substitute a "FHP" type belt. When installing the new belt, do not use a tool (screwdriver or pry-bar) to force the belt over the pulley flanges, this will stress the belt and cause a reduction in belt life.
2. Loosen the motor mounting plate front bolts and rear bolts.
3. Push the motor and its mounting plate towards the blower housing as close as possible to reduce the center distance between fan shaft and motor shaft.
4. Remove the belt by gently lifting the old belt over one of the pulleys.
5. Install the new belt by gently sliding the belt over both pulleys and then sliding the motor and plate away from the fan housing until proper tension is achieved.
6. Check the alignment of the pulleys, adjust if necessary.
7. Tighten all bolts.
8. Check the tension after a few hours of runtime and re-adjust as required.

Adjustable-Pitch Pulley on Motor

The motor pulley is an adjustable-pitch type that allows a servicer to implement changes in the fan wheel speed to match as-installed ductwork systems. The pulley consists of a fixed flange side that faces the motor (secured to the motor shaft) and a movable flange side that can be rotated around the fixed flange side that increases or reduces the pitch diameter of this driver pulley. (See Fig. 6.)

As the pitch diameter is changed by adjusting the position of the movable flange, the centerline on this pulley shifts laterally (along the motor shaft). This creates a requirement for a realignment of the pulleys after any adjustment of the movable flange. Also reset the belt tension after each realignment.

Check the condition of the motor pulley for signs of wear. Glazing of the belt contact surfaces and erosion on these surfaces are signs of improper belt tension and/or belt slippage. Pulley replacement may be necessary.

To change fan speed:

1. Shut off unit power supply.
2. Loosen belt by loosening fan motor mounting nuts. (See Fig. 5.)
3. Loosen movable pulley flange setscrew. (See Fig. 6.)
4. Screw movable flange toward fixed flange to increase speed and away from fixed flange to decrease speed. Increasing fan speed increases load on motor. Do not exceed maximum speed specified.
5. Set movable flange at nearest keyway of pulley hub and tighten setscrew to torque specifications.

To align fan and motor pulleys:

1. Loosen fan pulley setscrews.
2. Slide fan pulley along fan shaft. Make angular alignment by loosening motor from mounting.
3. Tighten fan pulley setscrews and motor mounting bolts to torque specifications.
4. Recheck belt tension.

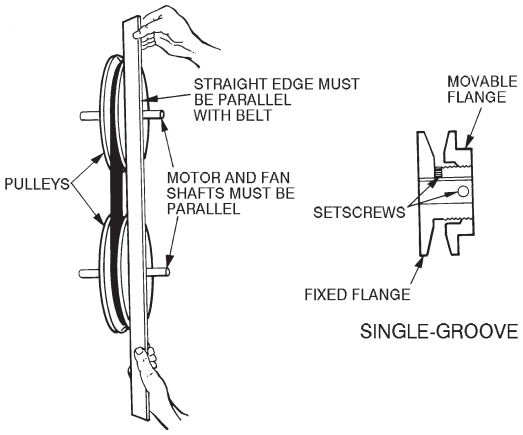

C07075

Fig. 6 - Supply-Fan Pulley Adjustment

Bearings

This fan system uses bearings featuring concentric split locking collars. The collars are tightened through a cap screw bridging the split portion of the collar. The cap screw has a Torx T25 socket head. To tighten the locking collar: Hold the locking collar tightly against the inner race of the bearing and torque the cap screw to 65-70 in-lb (7.4-7.9 Nm). See Fig. 7.

C08121

Fig. 7 - Tightening Locking Collar

Motor

When replacing the motor, also replace the external-tooth lock washer (star washer) under the motor mounting base; this is part of the motor grounding system. Ensure the teeth on the lock washer are in contact with the motor's painted base. Tighten motor mounting bolts to 120 +/- 12 in-lbs.

Changing fan wheel speed by changing pulleys: The horsepower rating of the belt is primarily dictated by the pitch diameter of the smaller pulley in the drive system (typically the motor pulley in these units). Do not install a replacement motor pulley with a smaller pitch diameter than provided on the original factory pulley. Change fan wheel speed by changing the fan pulley (larger pitch diameter to reduce wheel speed, smaller pitch diameter to increase wheel speed) or select a new system (both pulleys and matching belt(s)).

Before changing pulleys to increase fan wheel speed, check the fan performance at the target speed and airflow rate to determine new motor loading (bhp). Use the fan performance tables or use the Packaged Rooftop Builder software program. Confirm that the motor in this unit is capable of operating at the new operating condition. Fan shaft loading increases dramatically as wheel speed is increased.

To reduce vibration, replace the motor's adjustable pitch pulley with a fixed pitch pulley (after the final airflow balance adjustment). This will reduce the amount of vibration generated by the motor/belt-drive system.

⚠ WARNING

UNIT OPERATION AND SAFETY HAZARD

Failure to follow this warning could cause personal injury, death and/or equipment damage.

This system uses Puron® refrigerant which has higher pressures than R-22 and other refrigerants. No other refrigerant may be used in this system. Gauge set, hoses, and recovery system must be designed to handle Puron refrigerant. If unsure about equipment, consult the equipment manufacturer.

Condenser Coil

The condenser coil is fabricated with round tube copper hairpins and plate fins of various materials and/or coatings (see Model Number Format in the Appendix to identify the materials provided in this unit). The coil may be one-row or composite-type two-row. Composite two-row coils are two single-row coils fabricated with a single return bend end tubesheet.

Condenser Coil Maintenance and Cleaning Recommendation

Routine cleaning of coil surfaces is essential to maintain proper operation of the unit. Elimination of contamination and removal of harmful residues will greatly increase the life of the coil and extend the life of the unit. The following maintenance and cleaning procedures are recommended as part of the routine maintenance activities to extend the life of the coil.

Remove Surface Loaded Fibers

Surface loaded fibers or dirt should be removed with a vacuum cleaner. If a vacuum cleaner is not available, a soft non-metallic bristle brush may be used. In either case, the tool should be applied in the direction of the fins. Coil surfaces can be easily damaged (fin edges can be easily bent over and damage to the coating of a protected coil) if the tool is applied across the fins.

NOTE: Use of a water stream, such as a garden hose, against a surface loaded coil will drive the fibers and dirt into the coil. This will make cleaning efforts more difficult. Surface loaded fibers must be completely removed prior to using low velocity clean water rinse.

Periodic Clean Water Rinse

A periodic clean water rinse is very beneficial for coils that are applied in coastal or industrial environments. However, it is very important that the water rinse is made with a very low velocity water stream to avoid damaging the fin edges. Monthly cleaning as described below is recommended.

Routine Cleaning of Coil Surfaces

Periodic cleaning with Totaline® environmentally sound coil cleaner is essential to extend the life of coils. This cleaner is available from Carrier Replacement Components Division as part number P902-0301 for a one gallon container, and part number P902-0305 for a 5 gallon container. It is recommended that all coils, including standard aluminum, pre-coated, copper/copper or E-coated coils be cleaned with the Totaline environmentally sound coil cleaner as described below. Coil cleaning should be part of the unit's regularly scheduled maintenance procedures to ensure long life of the coil. Failure to clean the coils may result in reduced durability in the environment.

Avoid use of:

- coil brighteners
- acid cleaning prior to painting
- high pressure washers
- poor quality water for cleaning

Totaline environmentally sound coil cleaner is nonflammable, hypo allergenic, non bacterial, and a USDA accepted biodegradable agent that will not harm the coil or surrounding components such as electrical wiring, painted metal surfaces, or insulation. Use of non-recommended coil cleaners is strongly discouraged since coil and unit durability could be affected.

One-Row Coil

Wash coil with commercial coil cleaner. It is not necessary to remove top panel.

Two-Row Coils

Clean coil as follows:

1. Turn off unit power, tag disconnect.
2. Remove top panel screws on condenser end of unit.
3. Remove condenser coil corner post. See Fig. 8. To hold top panel open, place coil corner post between top panel and center post. See Fig. 9.

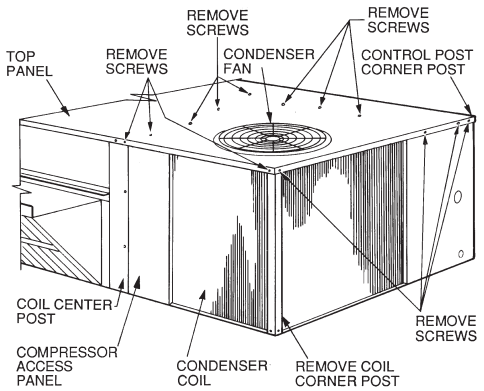

Fig. 8 - Cleaning Condenser Coil

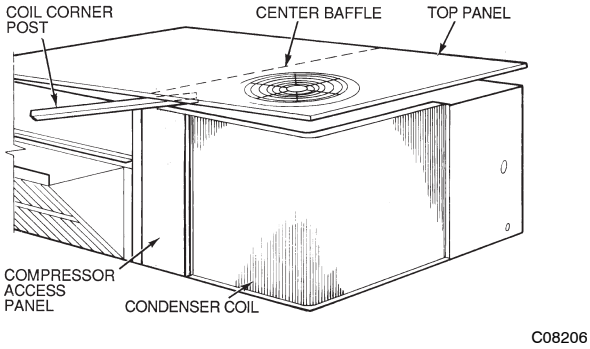

Fig. 9 - Propping Up Top Panel

4. Remove screws securing coil to compressor plate and compressor access panel.
5. Remove fastener holding coil sections together at return end of condenser coil. Carefully separate the outer coil section 3 to 4 in. from the inner coil section. See Fig. 10.

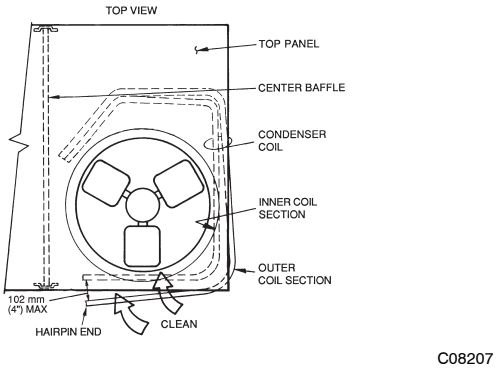

Fig. 10 - Separating Coil Sections

6. Use a water hose or other suitable equipment to flush down between the 2 coil sections to remove dirt and debris. Clean the outer surfaces with a stiff brush in the normal manner.
7. Secure inner and outer coil rows together with a field-supplied fastener.
8. Reposition the outer coil section and remove the coil corner post from between the top panel and center post. Reinstall the coil corner post and replace all screws.

Totaline Environmentally Sound Coil Cleaner Application Equipment

- 2-1/2 gallon garden sprayer
- Water rinse with low velocity spray nozzle

⚠ CAUTION

UNIT DAMAGE HAZARD

Failure to follow this caution may result in reduced unit performance or unit shutdown.

High velocity water from a pressure washer, garden hose, or compressed air should never be used to clean a coil. The force of the water or air jet will bend the fin edges and increase airside pressure drop.

⚠ CAUTION

UNIT DAMAGE HAZARD

Failure to follow this caution may result in accelerated corrosion of unit parts.

Harsh chemicals, household bleach or acid or basic cleaners should not be used to clean outdoor or indoor coils of any kind. These cleaners can be very difficult to rinse out of the coil and can accelerate corrosion at the fin/tube interface where dissimilar materials are in contact. If there is dirt below the surface of the coil, use the Totaline environmentally sound coil cleaner.

Totaline Environmentally Sound Coil Cleaner Application Instructions

1. Proper eye protection such as safety glasses is recommended during mixing and application.
2. Remove all surface loaded fibers and dirt with a vacuum cleaner as described above.
3. Thoroughly wet finned surfaces with clean water and a low velocity garden hose, being careful not to bend fins.
4. Mix Totaline environmentally sound coil cleaner in a 2-1/2 gallon garden sprayer according to the instructions included with the cleaner. The optimum solution temperature is 100°F.

NOTE: Do NOT USE water in excess of 130°F, as the enzymatic activity will be destroyed.

5. Thoroughly apply Totaline environmentally sound coil cleaner solution to all coil surfaces including finned area, tube sheets and coil headers.
6. Hold garden sprayer nozzle close to finned areas and apply cleaner with a vertical, up-and-down motion. Avoid spraying in horizontal pattern to minimize potential for fin damage.
7. Ensure cleaner thoroughly penetrates deep into finned areas.
8. Interior and exterior finned areas must be thoroughly cleaned.
9. Finned surfaces should remain wet with cleaning solution for 10 minutes.
10. Ensure surfaces are not allowed to dry before rinsing. Reapplying cleaner as needed to ensure 10-minute saturation is achieved.
11. Thoroughly rinse all surfaces with low velocity clean water using downward rinsing motion of water spray nozzle. Protect fins from damage from the spray nozzle.

Evaporator Coil

Cleaning the Evaporator Coil

1. Turn unit power off. Install lockout tag. Remove evaporator coil access panel.
2. If economizer or two-position damper is installed, remove economizer by disconnecting Molex plug and removing mounting screws.

3. Slide filters out of unit.
4. Clean coil using a commercial coil cleaner or dishwasher detergent in a pressurized spray canister. Wash both sides of coil and flush with clean water. For best results, back-flush toward return-air section to remove foreign material. Flush condensate pan after completion.
5. Reinstall economizer and filters.
6. Reconnect wiring.
7. Replace access panels.

Evaporator Coil Metering Devices

The metering devices are multiple fixed-bore devices (Acutrol™) swedged into the horizontal outlet tubes from the liquid header, located at the entrance to each evaporator coil circuit path. These are non-adjustable. Service requires replacing the entire liquid header assembly.

To check for possible blockage of one or more of these metering devices, disconnect the supply fan contactor (IFC) coil, then start the compressor and observe the frosting pattern on the face of the evaporator coil. A frost pattern should develop uniformly across the face of the coil starting at each horizontal header tube. Failure to develop frost at an outlet tube can indicate a plugged or a missing orifice.

Refrigerant System Pressure Access Ports

There are two access ports in the system - on the suction tube near the compressor and on the discharge tube near the compressor. These are brass fittings with black plastic caps. The hose connection fittings are standard 1/4 SAE male flare couplings.

The brass fittings are two-piece High Flow valves, with a receptacle base brazed to the tubing and an integral spring-closed check valve core screwed into the base. (See Fig. 11.) This check valve is permanently assembled into this core body and cannot be serviced separately; replace the entire core body if necessary. Service tools are available from RCD that allow the replacement of the check valve core without having to recover the entire system refrigerant charge. Apply compressor refrigerant oil to the check valve core's bottom o-ring. Install the fitting body with 96 +/ -10 in-lbs of torque; do not overtighten.

PURON® (R-410A) REFRIGERANT

This unit is designed for use with Puron (R-410A) refrigerant. Do not use any other refrigerant in this system. Puron (R-410A) refrigerant is provided in pink (rose) colored cylinders.

These cylinders are available with and without dip tubes; cylinders with dip tubes will have a label indicating this feature. For a cylinder with a dip tube, place the cylinder in the upright position (access valve at the top) when removing liquid refrigerant for charging. For a cylinder without a dip tube, invert the cylinder (access valve on the bottom) when removing liquid refrigerant.

Because Puron (R-410A) refrigerant is a blend, it is strongly recommended that refrigerant always be removed from the cylinder as a liquid. Admit liquid refrigerant into the system in the discharge line. If adding refrigerant into the suction line, use a commercial metering/expansion device at the gauge manifold; remove liquid from the cylinder, pass it through the metering device at the gauge set and then pass it into the suction line as a vapor. Do not remove Puron (R-410A) refrigerant from the cylinder as a vapor.

Refrigerant Charge

Amount of refrigerant charge is listed on the unit's nameplate. Refer to Carrier GTAC2-5 Charging, Recovery, Recycling and Reclamation training manual and the following procedures.

Unit panels must be in place when unit is operating during the charging procedure.

No Charge

Use standard evacuating techniques. After evacuating system, weigh in the specified amount of refrigerant.

Low-Charge Cooling

Using Cooling Charging Charts, Figs. 13-15, vary refrigerant until the conditions of the appropriate chart are met. Note the charging charts are different from type normally used. Charts are based on charging the units to the correct subcooling for the various operating conditions. Accurate pressure gauge and temperature sensing device are required. Connect the pressure gauge to the service port on the liquid line. Mount the temperature sensing device on the liquid line and insulate it so that outdoor ambient temperature does not affect the reading. Indoor-air cfm must be within the normal operating range of the unit.

To Use Cooling Charging Charts

Take the outdoor ambient temperature and read the liquid pressure gauge. Refer to chart to determine what liquid temperature should be. If liquid temperature is low, add refrigerant. If liquid temperature is high, carefully recover some of the charge. Recheck the liquid pressure as charge is adjusted.

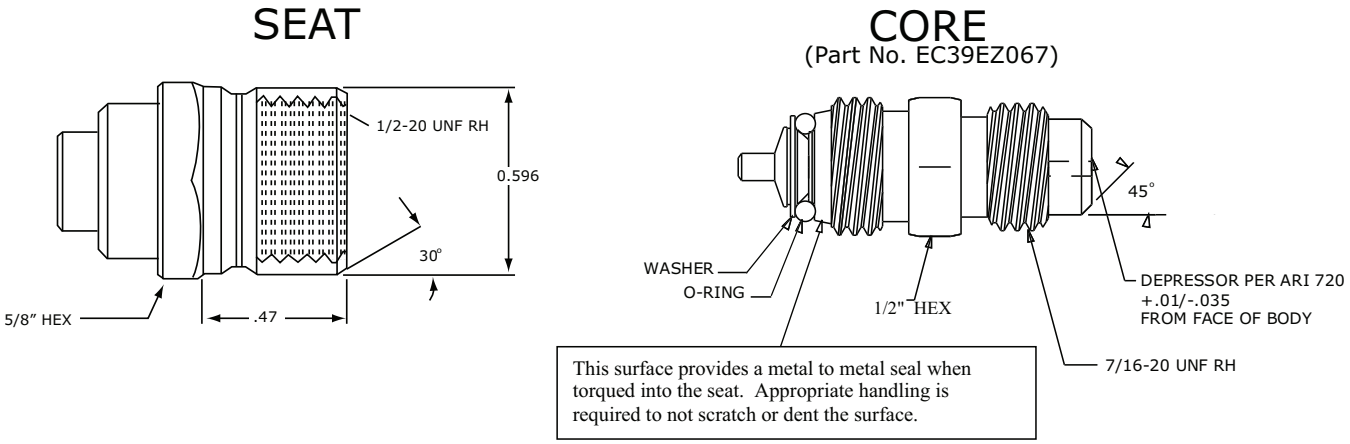

C08453

Fig. 11 - CoreMax Access Port Assembly

SIZE DESIGNATION	NOMINAL TONS REFERENCE
004	3
005	4
006	5

EXAMPLE:

Model 48LC*004

Outdoor Temperature . . . . . 85°F (29°C)

Suction Pressure . . . . . 140 psig (965 kPa)

Suction Temperature should be . . . . . 60°F (16°C)

THERMOSTATIC EXPANSION VALVE (TXV)

All 48LC's have a factory installed nonadjustable thermostatic expansion valve (TXV). The TXV will be a bi-flow, bleed port expansion valve with an external equalizer. TXVs are specifically designed to operate with Puron® or R-22 refrigerant, use only factory authorized TXVs. Do not interchange Puron and R-22 TXVs.

TXV Operation

The TXV is a metering device that is used in air conditioning and heat pump systems to adjust to changing load conditions by maintaining a preset superheat temperature at the outlet of the evaporator coil.

Replacing TXV

1. Recover refrigerant.
2. Remove TXV support clamp using a 5/l6-in. nut driver.
3. Remove TXV using a backup wrench on connections to prevent damage to tubing.
4. Remove equalizer tube from suction line of coil. Use file or tubing cutter to cut brazed equalizer line approximately 2 inches above suction tube.
5. Remove bulb from vapor tube inside cabinet.
6. Install the new TXV using a wrench and backup wrench to avoid damage to tubing or valve to attach TXV to distributor.
7. Attach equalizer tube to suction line. If coil has mechanical connection, then use wrench and back up wrench to attach. If coil has brazed connection, use file or tubing cutters to remove mechanical flare nut from equalizer line. Then use coupling to braze the equalizer line to stub (previous equalizer line) in suction line.
8. Attach TXV bulb in the same location as original (in the sensing bulb indent) was when removed, using supplied bulb clamps. See Fig. 12.

C10372

Fig. 12 - Sensing Bulb Indent

9. Route equalizer tube through suction connection opening (large hole) in fitting panel and install fitting panel in place.
10. Sweat inlet of TXV marked "IN" to liquid line. Avoid excessive heat which could damage valve.

COOLING CHARGING CHARTS

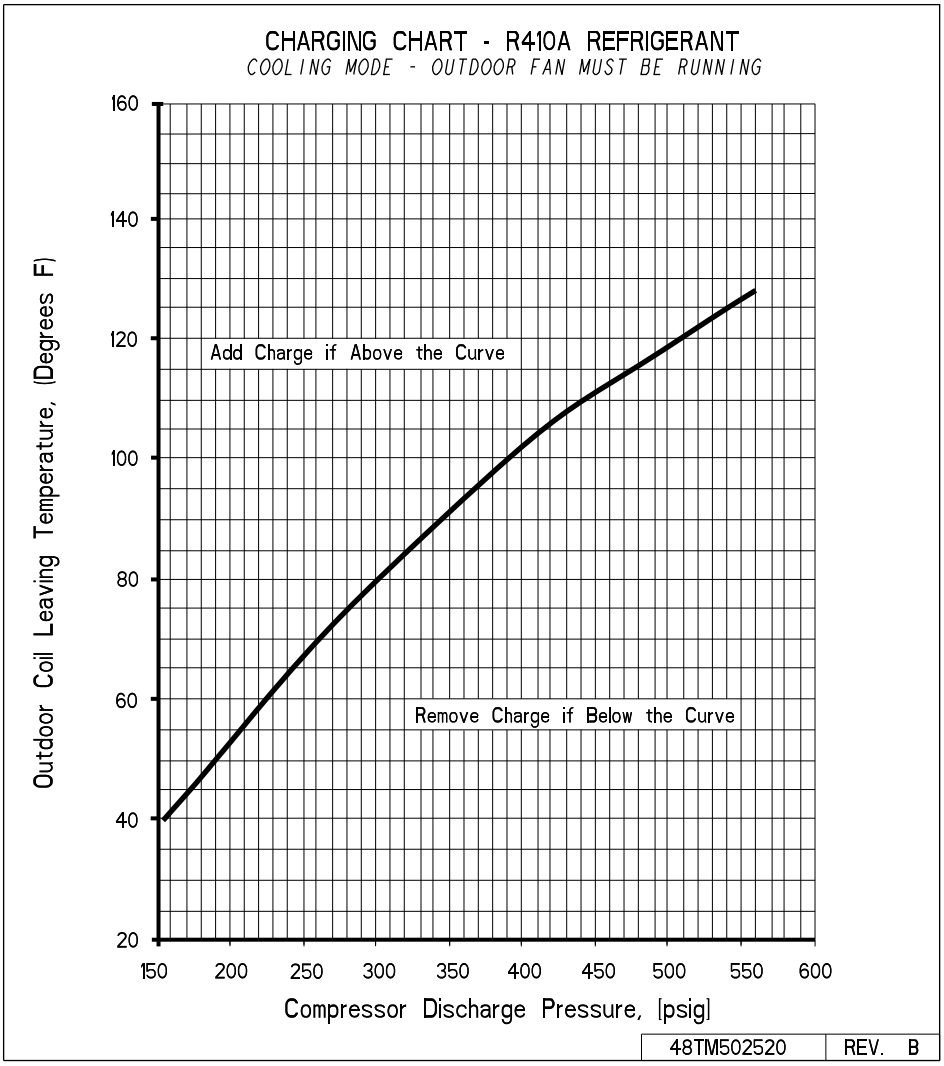

C14037

Fig. 13 - Cooling Charging Charts - 3 Ton

48LC

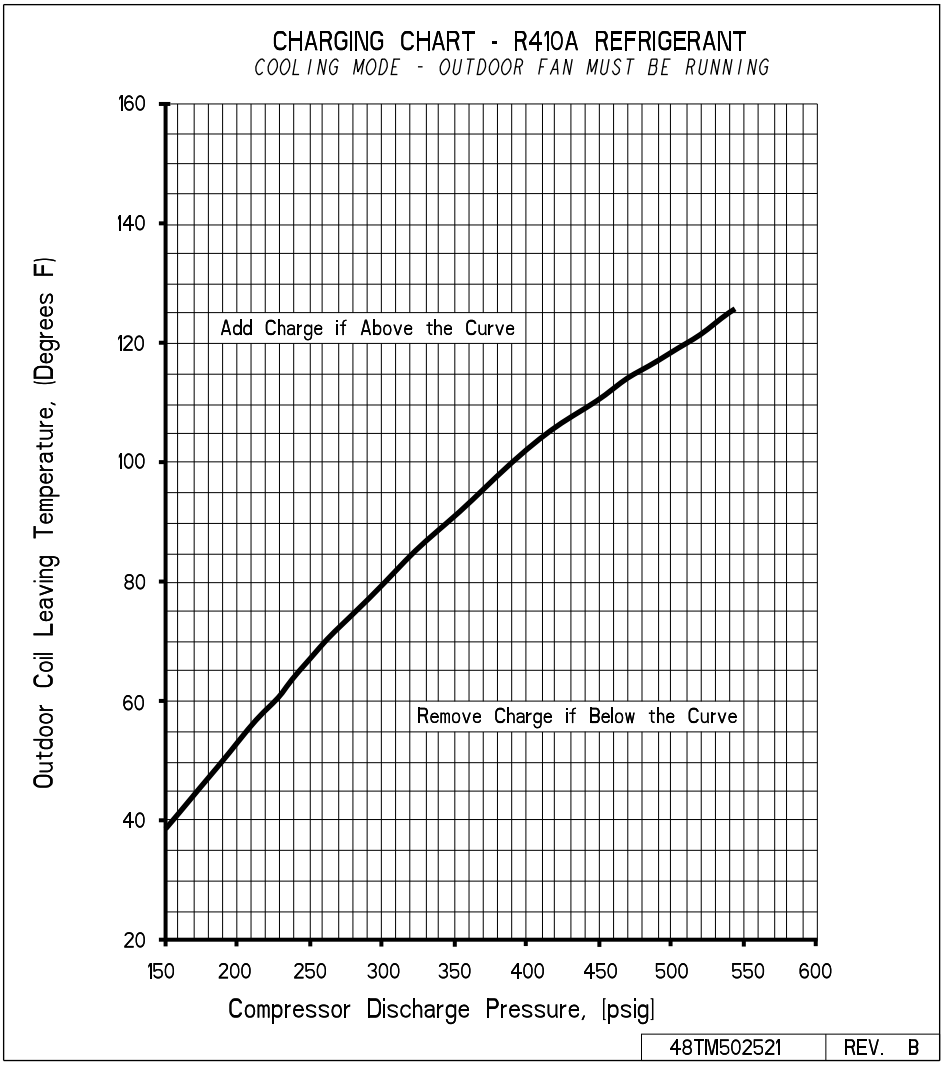

C14038

Fig. 14 - Cooling Charging Charts - 4 Ton

COOLING CHARGING CHARTS (cont.)

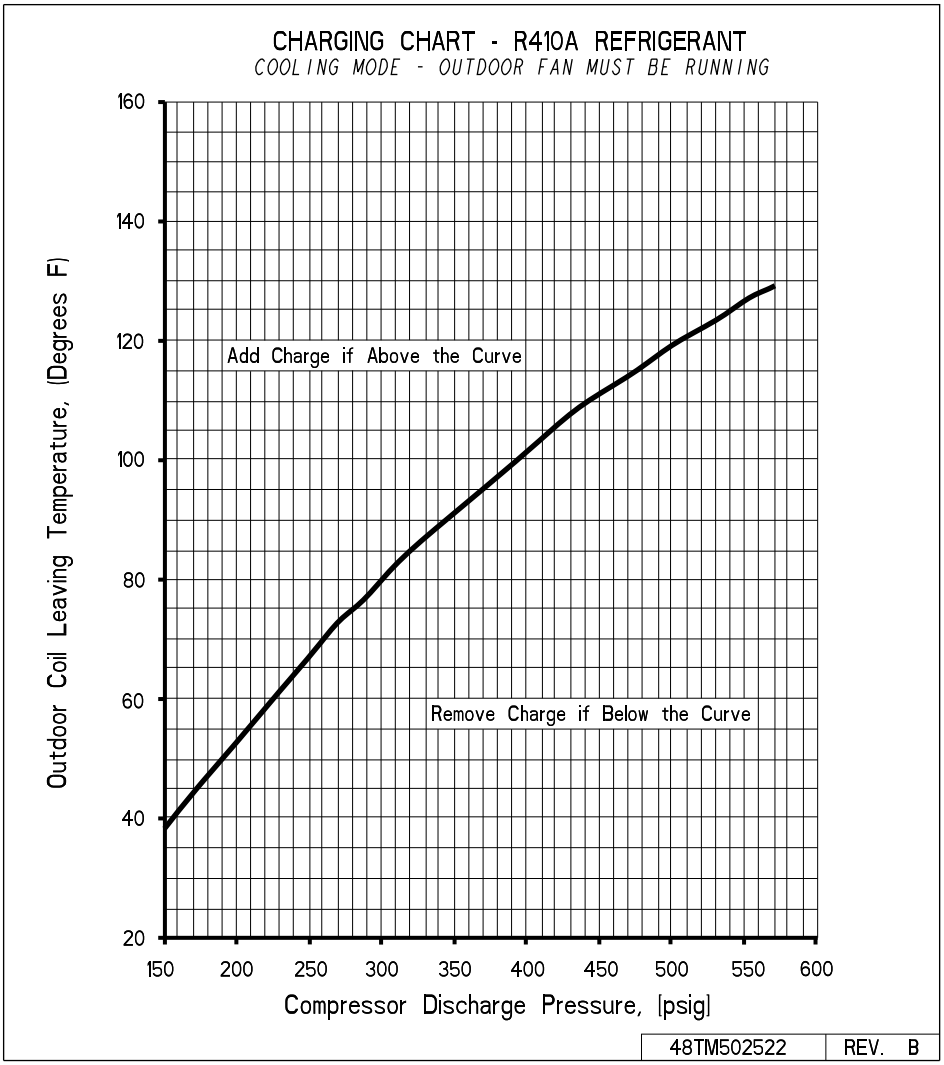

C14039

Fig. 15 - Cooling Charging Charts - 5 Ton

Table 1 – Cooling Service Analysis

PROBLEM	CAUSE	REMEDY
Compressor and Condenser Fan Will Not Start.	Power failure.	Call power company.
	Fuse blown or circuit breaker tripped.	Replace fuse or reset circuit breaker.
	Defective thermostat, contactor, transformer, or control relay.	Replace component.
	Insufficient line voltage.	Determine cause and correct.
	Incorrect or faulty wiring.	Check wiring diagram and rewire correctly.
	Thermostat setting too high.	Lower thermostat setting below room temperature.
Compressor Will Not Start But Condenser Fan Runs.	Faulty wiring or loose connections in compressor circuit.	Check wiring and repair or replace.
	Compressor motor burned out, seized, or internal overload open.	Determine cause. Replace compressor.
	Defective run/start capacitor, overload, start relay.	Determine cause and replace.
	One leg of three–phase power dead.	Replace fuse or reset circuit breaker. Determine cause.
Compressor Cycles (other than normally satisfying thermostat).	Refrigerant overcharge or undercharge.	Recover refrigerant, evacuate system, and recharge to nameplate.
	Defective compressor.	Replace and determine cause.
	Insufficient line voltage.	Determine cause and correct.
	Blocked condenser.	Determine cause and correct.
	Defective run/start capacitor, overload, or start relay.	Determine cause and replace.
	Defective thermostat.	Replace thermostat.
	Faulty condenser–fan motor or capacitor.	Replace.
	Restriction in refrigerant system.	Locate restriction and remove.
Compressor Operates Continuously.	Dirty air filter.	Replace filter.
	Unit undersized for load.	Decrease load or increase unit size.
	Thermostat set too low.	Reset thermostat.
	Low refrigerant charge.	Locate leak; repair and recharge.
	Leaking valves in compressor.	Replace compressor.
	Air in system.	Recover refrigerant, evacuate system, and recharge.
	Condenser coil dirty or restricted.	Clean coil or remove restriction.
Excessive Head Pressure.	Dirty air filter.	Replace filter.
	Dirty condenser coil.	Clean coil.
	Refrigerant overcharged.	Recover excess refrigerant.
	Air in system.	Recover refrigerant, evacuate system, and recharge.
	Condenser air restricted or air short–cycling.	Determine cause and correct.
Head Pressure Too Low.	Low refrigerant charge.	Check for leaks; repair and recharge.
	Compressor valves leaking.	Replace compressor.
	Restriction in liquid tube.	Remove restriction.
Excessive Suction Pressure.	High head load.	Check for source and eliminate.
	Compressor valves leaking.	Replace compressor.
	Refrigerant overcharged.	Recover excess refrigerant.
Suction Pressure Too Low.	Dirty air filter.	Replace filter.
	Low refrigerant charge.	Check for leaks; repair and recharge.
	Metering device or low side restricted.	Remove source of restriction.
	Insufficient evaporator airflow.	Increase air quantity. Check filter and replace if necessary.
	Temperature too low in conditioned area.	Reset thermostat.
	Outdoor ambient below 25° F.	Install low–ambient kit.
Evaporator Fan Will Not Shut Off.	Time off delay not finished.	Wait for 30–second off delay.
Compressor Makes Excessive Noise.	Compressor rotating in wrong direction.	Reverse the 3–phase power leads.

Compressor

Lubrication

The compressor is charged with the correct amount of oil at the factory.

⚠ CAUTION

UNIT DAMAGE HAZARD

Failure to follow this caution may result in damage to components.

The compressor is in a Puron® refrigerant system and uses a polyolester (POE) oil. This oil is extremely hygroscopic, meaning it absorbs water readily. POE oils can absorb 15 times as much water as other oils designed for HCFC and CFC refrigerants. Avoid exposure of the oil to the atmosphere.

48LC

Replacing Compressor

The compressor used with Puron refrigerant contains a POE oil. This oil has a high affinity for moisture. Do not remove the compressor's tube plugs until ready to insert the unit suction and discharge tube ends.

Compressor mounting bolt torque is 65-75 ft-lbs.

Compressor Rotation

On 3-phase units with scroll compressors, it is important to be certain compressor is rotating in the proper direction. To determine whether or not compressor is rotating in the proper direction:

1. Connect service gauges to suction and discharge pressure fittings.
2. Energize the compressor.
3. The suction pressure should drop and the discharge pressure should rise, as is normal on any start-up.

NOTE: If the suction pressure does not drop and the discharge pressure does not rise to normal levels:

4. Note that the evaporator fan is probably also rotating in the wrong direction.
5. Turn off power to the unit.
6. Reverse any two of the unit power leads.
7. Reapply power to the compressor.

The suction and discharge pressure levels should now move to their normal start-up levels.

NOTE: When the compressor is rotating in the wrong direction, the unit makes an elevated level of noise and does not provide cooling.

Filter Drier

Replace whenever refrigerant system is exposed to atmosphere. Only use factory specified liquid-line filter driers with working pressures no less than 650 psig. Do not install a suction-line filter drier in liquid line. A liquid-line filter drier designed for use with Puron refrigerant is required on every unit.

Condenser-Fan Adjustment

1. Shut off unit power supply. Install lockout tag.
2. Remove condenser-fan assembly (grille, motor, and fan).
3. Loosen fan hub setscrews.
4. Adjust fan height as shown in Fig. 16.
5. Tighten setscrews.
6. Replace condenser-fan assembly.

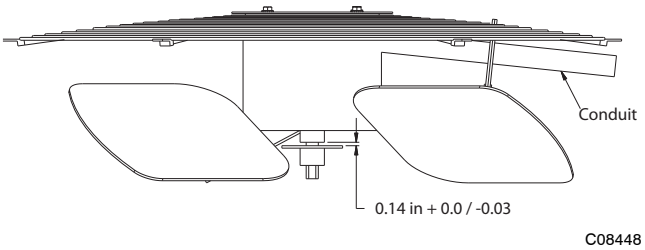

Fig. 16 - Condenser Fan Adjustment

Troubleshooting Cooling System

Refer to Table 1 for additional troubleshooting topics.

CONVENIENCE OUTLETS

⚠ WARNING

ELECTRICAL OPERATION HAZARD

Failure to follow this warning could result in personal injury or death.

Units with convenience outlet circuits may use multiple disconnects. Check convenience outlet for power status before opening unit for service. Locate its disconnect switch, if appropriate, and open it. Tag-out this switch, if necessary.

Two types of convenience outlets are offered on 48LC models: Non-powered and unit-powered. Both types provide a 125-volt GFCI (ground-fault circuit-interrupter) duplex receptacle rated at 15-A behind a hinged waterproof access cover, located on the end panel of the unit. See Fig. 17.

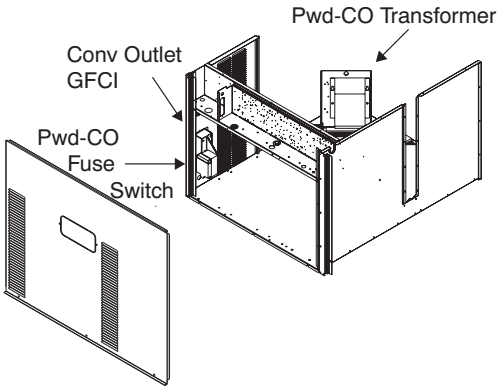

C08128

Fig. 17 - Convenience Outlet Location

Non-powered type: This type requires the field installation of a general-purpose 125-volt 15-A circuit powered from a source elsewhere in the building. Observe national and local codes when selecting wire size, fuse or breaker requirements and disconnect switch size and location. Route 125-v power supply conductors into the bottom of the utility box containing the duplex receptacle.

Unit-powered type: A unit-mounted transformer is factory-installed to stepdown the main power supply voltage to the unit to 115-v at the duplex receptacle. This option also includes a manual switch with fuse, located in a utility box and mounted on a bracket behind the convenience outlet; access is through the unit's control box access panel. See Fig. 17.

The primary leads to the convenience outlet transformer are not factory-connected. Selection of primary power source is a customer-option. If local codes permit, the transformer primary leads can be connected at the line-side terminals on a unit-mounted non-fused disconnect or HACR breaker switch; this will provide service power to the unit when the unit disconnect switch or HACR switch is open. Other connection methods will result in the convenience outlet circuit being de-energized when the unit disconnect or HACR switch is open. See Fig. 18.

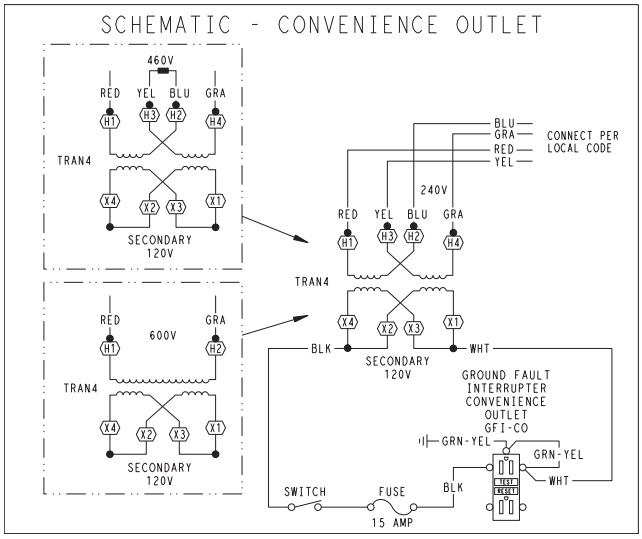

CO8283

Fig. 18 - Powered Convenience Outlet Wiring

UNIT VOLTAGE	CONNECT AS	PRIMARY CONNECTIONS	TRANSFORMER TERMINALS
208, 230	240	L1: RED +YEL L2: BLU + GRA	H1 + H3 H2 + H4
460	480	L1: RED Splice BLU + YEL L2: GRA	H1 H2 + H3 H4
575	600	L1: RED L2: GRA	H1 H2

Duty Cycle: The unit-powered convenience outlet has a duty cycle limitation. The transformer is intended to provide power on an intermittent basis for service tools, lamps, etc; it is not intended to provide 15-amps loading for continuous duty loads (such as electric heaters for overnight use). Observe a 50% limit on circuit loading above 8-amps (i.e., limit loads exceeding 8-amps to 30 minutes of operation every hour).

Maintenance: Periodically test the GFCI receptacle by pressing the TEST button on the face of the receptacle. This should cause the internal circuit of the receptacle to trip and open the receptacle. Check for proper grounding wires and power line phasing if the GFCI receptacle does not trip as required. Press the RESET button to clear the tripped condition.

Fuse on powered type: The factory fuse is a Bussman "Fusetron" T-15, non-renewable screw-in (Edison base) type plug fuse.

Using unit-mounted convenience outlets: Units with unit-mounted convenience outlet circuits will often require that two disconnects be opened to de-energize all power to the unit. Treat all units as electrically energized until the convenience outlet power is also checked and de-energization is confirmed. Observe National Electrical Code Article 210, Branch Circuits, for use of convenience outlets.

SMOKE DETECTORS

Smoke detectors are available as factory-installed options on 48LC models. Smoke detectors may be specified for Supply Air only or for Return Air without or with economizer or in combination of Supply Air and Return Air. Return Air smoke detectors are arranged for vertical return configurations only. All components necessary for operation are factory-provided and mounted. The unit is factory-configured for immediate smoke detector shutdown operation; additional wiring or modifications to unit terminal board may be necessary to complete the unit and smoke detector configuration to meet project requirements.

System

The smoke detector system consists of a four-wire controller and one or two sensors. Its primary function is to shut down the rooftop unit in order to prevent smoke from circulating throughout the building. It is not to be used as a life saving device.

Controller

The controller (see Fig. 19) includes a controller housing, a printed circuit board, and a clear plastic cover. The controller can be connected to one or two compatible duct smoke sensors. The clear plastic cover is secured to the housing with a single captive screw for easy access to the wiring terminals. The controller has three LEDs (for Power, Trouble and Alarm) and a manual test/reset button (on the cover face).

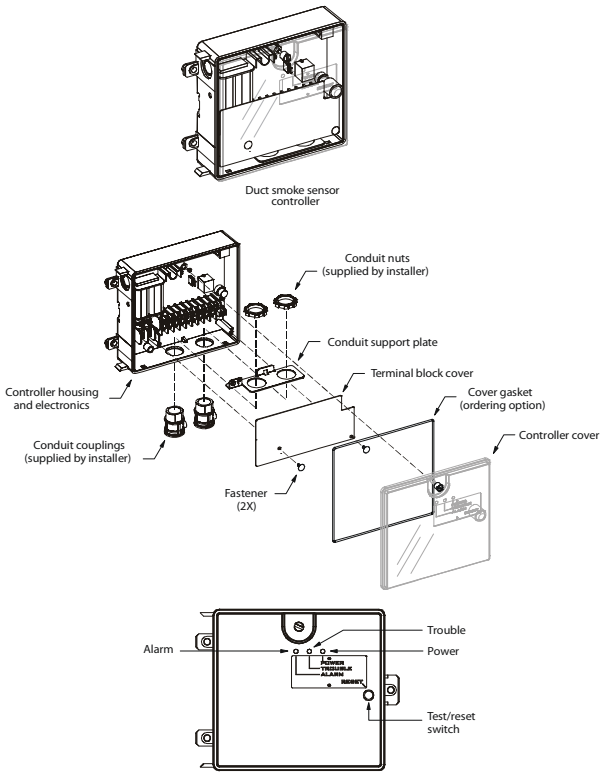

Fig. 19 - Controller Assembly

Sensor

The sensor (see Fig. 20) includes a plastic housing, a printed circuit board, a clear plastic cover, a sampling tube inlet and an exhaust tube. The sampling tube (when used) and exhaust tube are attached during installation. The sampling tube varies in length depending on the size of the rooftop unit. The clear plastic cover permits visual inspections without having to disassemble the sensor. The cover attaches to the sensor housing using four captive screws and forms an airtight chamber around the sensing electronics. Each sensor includes a harness with an RJ45 terminal for connecting to the controller. Each sensor has four LEDs (for Power, Trouble, Alarm and Dirty) and a manual test/reset button (on the left-side of the housing).

Air is introduced to the duct smoke detector sensor's sensing chamber through a sampling tube that extends into the HVAC duct and is directed back into the ventilation system through a (shorter) exhaust tube.

The difference in air pressure between the two tubes pulls the sampled air through the sensing chamber. When a sufficient amount of smoke is detected in the sensing chamber, the sensor signals an alarm state and the controller automatically takes the appropriate action to shut down fans and blowers, change over air handling systems, notify the fire alarm control panel, etc.

The sensor uses a process called differential sensing to prevent gradual environmental changes from triggering false alarms. A rapid change in environmental conditions, such as smoke from a fire, causes the sensor to signal an alarm state but dust and debris accumulated over time does not.

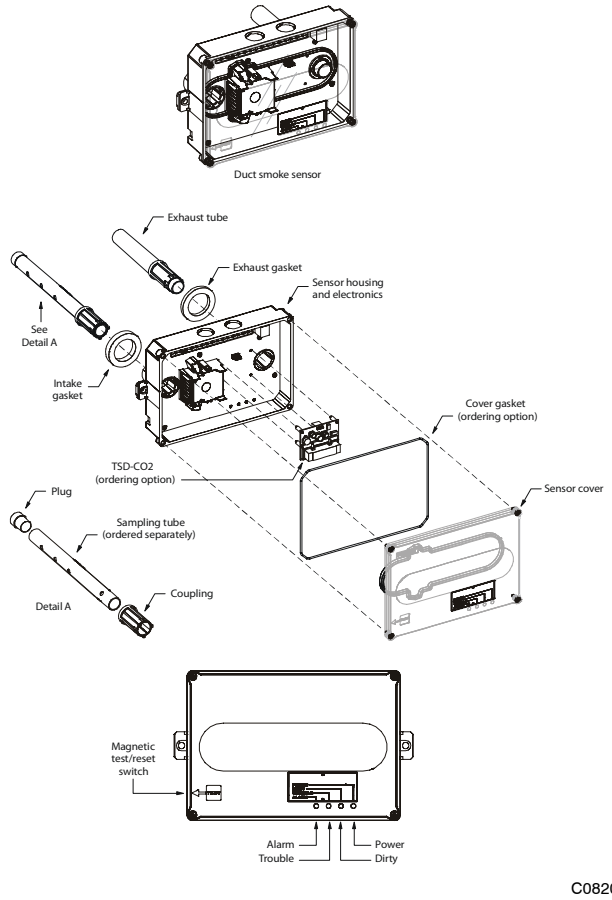

Fig. 20 - Smoke Detector Sensor

For installations using two sensors, the duct smoke detector does not differentiate which sensor signals an alarm or trouble condition.

Smoke Detector Locations

Supply Air — The Supply Air smoke detector sensor is located to the left of the unit's indoor (supply) fan. See Fig. 21. Access is through the fan access panel. There is no sampling tube used at this location. The sampling tube inlet extends through the side plate of the fan housing (into a high pressure area). The controller is located on a bracket to the right of the return filter, accessed through the lift-off filter panel.

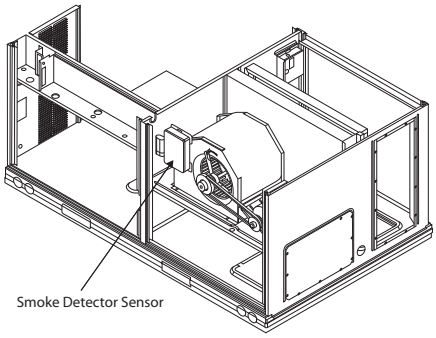

C08245

Fig. 21 - Typical Supply Air Smoke Detector Sensor Location

Return Air without Economizer — The sampling tube is located across the return air opening on the unit basepan. See Fig. 22. The holes in the sampling tube face downward, into the return air stream. The sampling tube is connected via tubing to the return air sensor that is mounted on a bracket high on the partition between return filter and controller location. (This sensor is shipped in a flat-mounting location. Installation requires that this sensor be relocated to its operating location and the tubing to the sampling tube be connected. See installation steps below.)

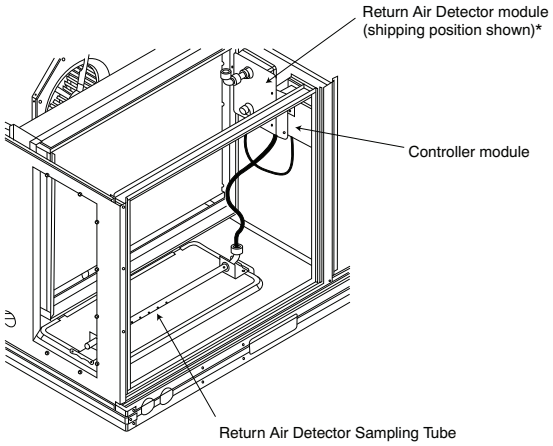

*RA detector must be moved from shipping position to operating position by installer

C07307

Fig. 22 - Typical Return Air Detector Location

Return Air with Economizer — The sampling tube is inserted through the side plates of the economizer housing, placing it across the return air opening on the unit basepan. See Fig. 23. The holes in the sampling tube face downward, into the return air stream. The sampling tube is connected via tubing to the return air sensor that is mounted on a bracket high on the partition between return filter and controller location. (This sensor is shipped in a flat-mounting location. Installation requires that this sensor be relocated to its operating location and the tubing to the sampling tube be connected. See installation steps below.)

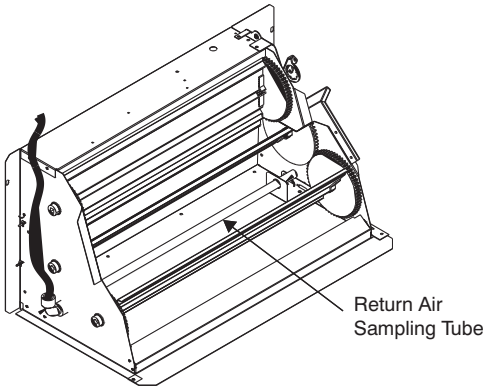

C08129

Fig. 23 - Return Air Sampling Tube Location

Completing Installation of Return Air Smoke Sensor:

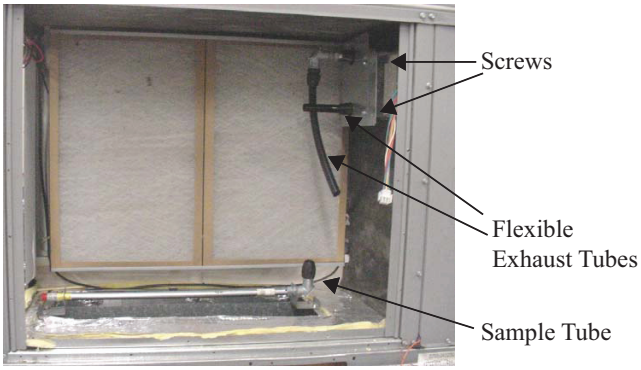

C08126

Fig. 24 - Return Air Detector Shipping Position

1. Unscrew the two screws holding the Return Air Sensor detector plate. See Fig. 24. Save the screws.
2. Remove the Return Air Sensor and its detector plate.
3. Rotate the detector plate so the sensor is facing outwards and the sampling tube connection is on the bottom. See Fig. 25.
4. Screw the sensor and detector plate into its operating position using screws from Step 1. Make sure the sampling tube connection is on the bottom and the exhaust tube is on the top. See Fig. 26.
5. Connect the flexible tube on the sampling inlet to the sampling tube on the basepan.
6. For units with an economizer, the sampling tube is integrated into the economizer housing but the connection of the flexible tubing to the sampling tube is the same.

C08127

Fig. 25 - Return Air Sensor Operating Position

FIOP Smoke Detector Wiring and Response

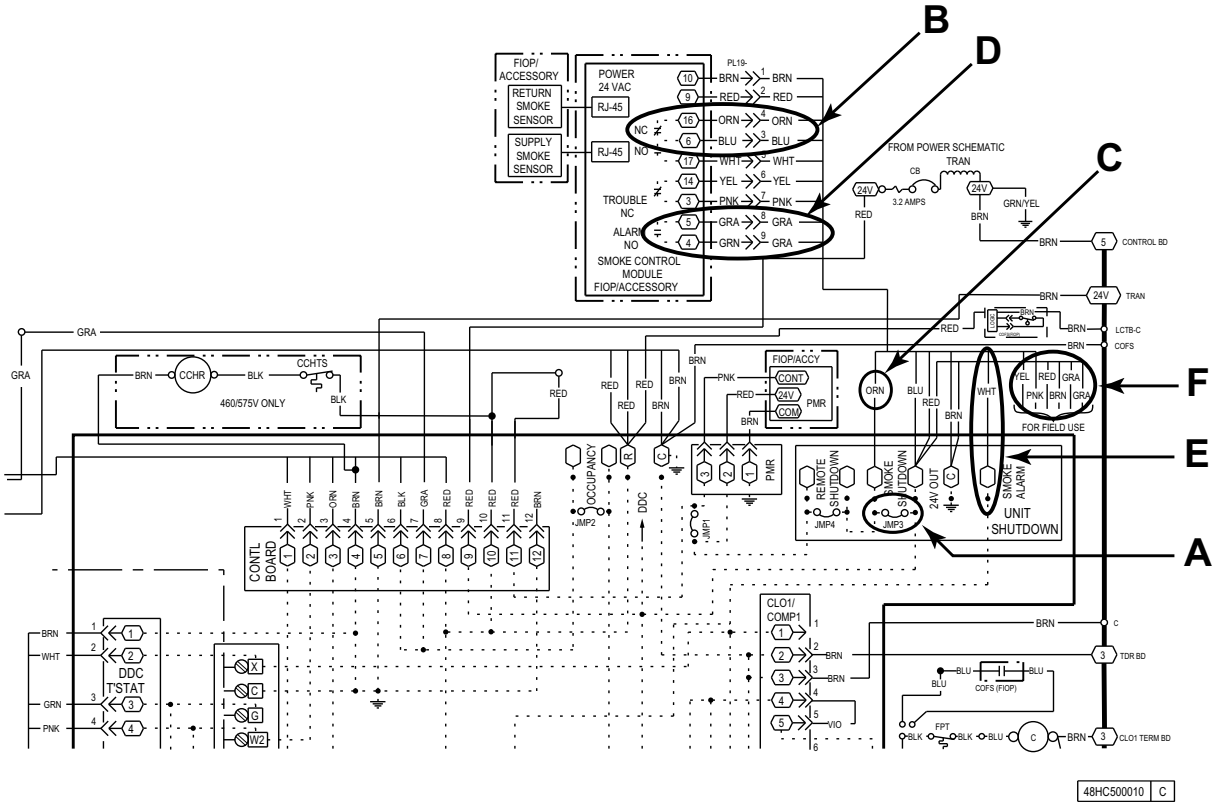

Fig. 26 - Typical Smoke Detector System Wiring

All units: FIOP smoke detector is configured to automatically shut down all unit operations when smoke condition is detected. See Fig. 26, Smoke Detector Wiring.

Highlight A: JMP 3 is factory-cut, transferring unit control to smoke detector.

Highlight B: Smoke detector NC contact set will open on smoke alarm condition, de-energizing the ORN conductor.

Highlight C: 24-v power signal via ORN lead is removed at Smoke Detector input on CTB; all unit operations cease immediately.

RTU Open Controls: Unit operating functions (fan, cooling and heating) are terminated as described above. In addition:

Highlight D: On smoke alarm condition, the smoke detector NO Alarm contact will close, supplying 24-v power to GRA conductor.

Highlight E: WHT lead at Smoke Alarm input on CTB provides 24-v signal to FIOP DDC control.

RTU Open: The 24-v signal is conveyed to RTU-Open's J1-10 input terminal. This signal initiates the FSD sequence by the RTU Open control. FSD status is reported to connected BAS network.

Using Remote Logic: Five conductors are provided for field use (see Highlight F) for additional annunciation functions.

Additional Application Data — Refer to Catalog No. HKRNKA-1XA for discussions on additional control features of these smoke detectors including multiple unit coordination. See Fig. 26.

Sensor and Controller Tests

Sensor Alarm Test

The sensor alarm test checks a sensor's ability to signal an alarm state. This test requires that you use a field provided SD-MAG test magnet.

⚠ CAUTION

OPERATIONAL TEST HAZARD

Failure to follow this caution may result in personnel and authority concern.

This test places the duct detector into the alarm state. Unless part of the test, disconnect all auxiliary equipment from the controller before performing the test. If the duct detector is connected to a fire alarm system, notify the proper authorities before performing the test.

Sensor Alarm Test Procedure

1. Hold the test magnet where indicated on the side of the sensor housing for seven seconds.
2. Verify that the sensor's Alarm LED turns on.
3. Reset the sensor by holding the test magnet against the sensor housing for two seconds.
4. Verify that the sensor's Alarm LED turns off.

Controller Alarm Test

The controller alarm test checks the controller's ability to initiate and indicate an alarm state.

⚠ CAUTION

OPERATIONAL TEST HAZARD

Failure to follow this caution may result in personnel and authority concern.

This test places the duct detector into the alarm state. Disconnect all auxiliary equipment from the controller before performing the test. If the duct detector is connected to a fire alarm system, notify the proper authorities before performing the test.

Controller Alarm Test Procedure

1. Press the controller's test/reset switch for seven seconds.
2. Verify that the controller's Alarm LED turns on.
3. Reset the sensor by pressing the test/reset switch for two seconds.
4. Verify that the controller's Alarm LED turns off.

Dirty Controller Test

The dirty controller test checks the controller's ability to initiate a dirty sensor test and indicate its results.

⚠ CAUTION

OPERATIONAL TEST HAZARD

Failure to follow this caution may result in personnel and authority concern.

Pressing the controller's test/reset switch for longer than seven seconds will put the duct detector into the alarm state and activate all automatic alarm responses.

Dirty Controller Test Procedure

1. Press the controller's test/reset switch for two seconds.
2. Verify that the controller's Trouble LED flashes.

Dirty Sensor Test

The dirty sensor test provides an indication of the sensor's ability to compensate for gradual environmental changes. A sensor that can no longer compensate for environmental changes is considered 100% dirty and requires cleaning or replacing. You must use a field provided SD-MAG test magnet to initiate a sensor dirty test. The sensor's Dirty LED indicates the results of the dirty test as shown in Table 2.

⚠ CAUTION

OPERATIONAL TEST HAZARD

Failure to follow this caution may result in personnel and authority concern.

Holding the test magnet against the sensor housing for more than seven seconds will put the duct detector into the alarm state and activate all automatic alarm responses.

Table 2 – Dirty LED Test

FLASHES	DESCRIPTION
1	0–25% dirty. (Typical of a newly installed detector)
2	25–50% dirty
3	51–75% dirty
4	76–99% dirty

Dirty Sensor Test Procedure

1. Hold the test magnet where indicated on the side of the sensor housing for two seconds.
2. Verify that the sensor's Dirty LED flashes.

⚠ CAUTION

OPERATIONAL TEST HAZARD

Failure to follow this caution may result in personnel and authority concern.

Changing the dirty sensor test operation will put the detector into the alarm state and activate all automatic alarm responses. Before changing dirty sensor test operation, disconnect all auxiliary equipment from the controller and notify the proper authorities if connected to a fire alarm system.

Changing the Dirt Sensor Test

By default, sensor dirty test results are indicated by:

- The sensor's Dirty LED flashing.
- The controller's Trouble LED flashing.
- The controller's supervision relay contacts toggle.

The operation of a sensor's dirty test can be changed so that the controller's supervision relay is not used to indicate test results. When two detectors are connected to a controller, sensor dirty test operation on both sensors must be configured to operate in the same manner.

To Configure the Dirty Sensor Test Operation

1. Hold the test magnet where indicated on the side of the sensor housing until the sensor's Alarm LED turns

on and its Dirty LED flashes twice (approximately 60 seconds).

2. Reset the sensor by removing the test magnet then holding it against the sensor housing again until the sensor's Alarm LED turns off (approximately 2 seconds).

Remote Station Test

The remote station alarm test checks a test/reset station's ability to initiate and indicate an alarm state.

⚠ CAUTION

OPERATIONAL TEST HAZARD

Failure to follow this caution may result in personnel and authority concern.

This test places the duct detector into the alarm state. Unless part of the test, disconnect all auxiliary equipment from the controller before performing the test. If the duct detector is connected to a fire alarm system, notify the proper authorities before performing the test.

SD-TRK4 Remote Alarm Test Procedure

1. Turn the key switch to the RESET/TEST position for seven seconds.
2. Verify that the test/reset station's Alarm LED turns on.
3. Reset the sensor by turning the key switch to the RESET/TEST position for two seconds.
4. Verify that the test/reset station's Alarm LED turns off.

Remote Test/Reset Station Dirty Sensor Test

The test/reset station dirty sensor test checks the test/reset station's ability to initiate a sensor dirty test and indicate the results. It must be wired to the controller as shown in Fig. 27 and configured to operate the controller's supervision relay. For more information, see "Changing sensor dirty test operation."

⚠ CAUTION

OPERATIONAL TEST HAZARD

Failure to follow this caution may result in personnel and authority concern.

If the test/reset station's key switch is left in the RESET/TEST position for longer than seven seconds, the detector will automatically go into the alarm state and activate all automatic alarm responses.

⚠ CAUTION

OPERATIONAL TEST HAZARD

Failure to follow this caution may result in personnel and authority concern.

Holding the test magnet to the target area for longer than seven seconds will put the detector into the alarm state and activate all automatic alarm responses.

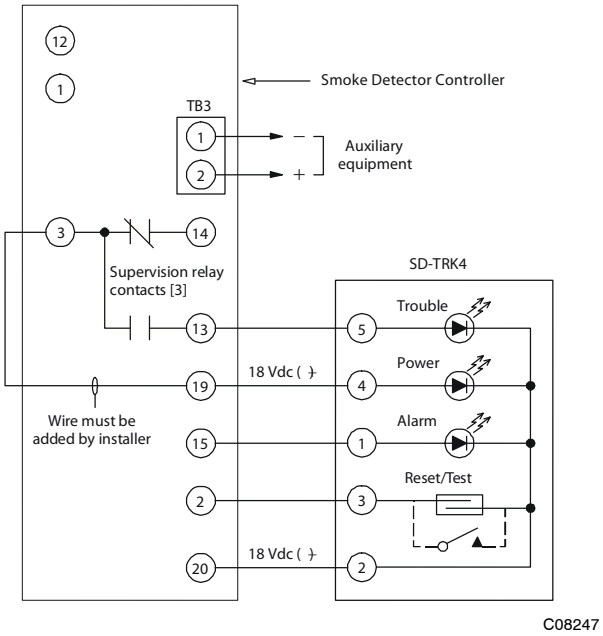

Fig. 27 - Remote Test/Reset Station Connections

Dirty Sensor Test Using an SD-TRK4

1. Turn the key switch to the RESET/TEST position for two seconds.
2. Verify that the test/reset station's Trouble LED flashes.

Detector Cleaning

Cleaning the Smoke Detector

Clean the duct smoke sensor when the Dirty LED is flashing continuously or sooner if conditions warrant.

⚠ CAUTION

OPERATIONAL TEST HAZARD

Failure to follow this caution may result in personnel and authority concern.

If the smoke detector is connected to a fire alarm system, first notify the proper authorities that the detector is undergoing maintenance then disable the relevant circuit to avoid generating a false alarm.

1. Disconnect power from the duct detector then remove the sensor's cover. (See Fig. 28.)

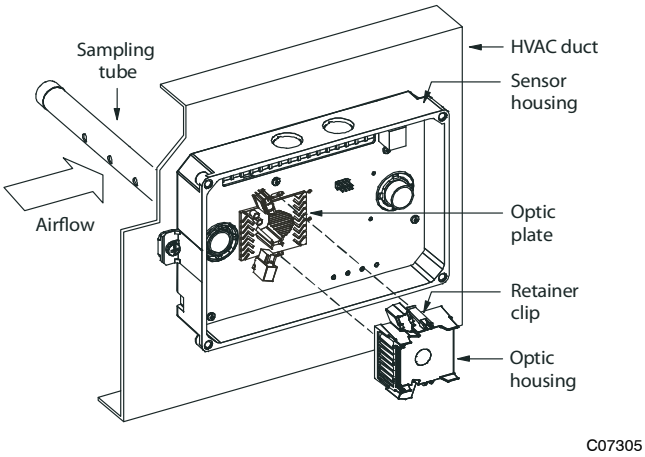

Fig. 28 - Sensor Cleaning Diagram

2. Using a vacuum cleaner, clean compressed air, or a soft bristle brush, remove loose dirt and debris from inside the sensor housing and cover.
   Use isopropyl alcohol and a lint-free cloth to remove dirt and other contaminants from the gasket on the sensor's cover.
3. Squeeze the retainer clips on both sides of the optic housing then lift the housing away from the printed circuit board.
4. Gently remove dirt and debris from around the optic plate and inside the optic housing.
5. Replace the optic housing and sensor cover.
6. Connect power to the duct detector then perform a sensor alarm test.

Indicators

Normal State

The smoke detector operates in the normal state in the absence of any trouble conditions and when its sensing chamber is free of smoke. In the normal state, the Power LED on both the sensor and the controller are on and all other LEDs are off.

Alarm State

The smoke detector enters the alarm state when the amount of smoke particulate in the sensor's sensing chamber exceeds the alarm threshold value. (See Table 3.) Upon entering the alarm state:

- The sensor's Alarm LED and the controller's Alarm LED turn on.
- The contacts on the controller's two auxiliary relays switch positions.
- The contacts on the controller's alarm initiation relay close.
- The controller's remote alarm LED output is activated (turned on).
- The controller's high impedance multiple fan shutdown control line is pulled to ground Trouble state.

The SuperDuct duct smoke detector enters the trouble state under the following conditions:

- A sensor's cover is removed and 20 minutes pass before it is properly secured.
- A sensor's environmental compensation limit is reached (100% dirty).
- A wiring fault between a sensor and the controller is detected.

An internal sensor fault is detected upon entering the trouble state:

- The contacts on the controller's supervisory relay switch positions. (See Fig. 29.)
- If a sensor trouble, the sensor's Trouble LED the controller's Trouble LED turn on.
- If 100% dirty, the sensor's Dirty LED turns on and the controller's Trouble LED flashes continuously.
- If a wiring fault between a sensor and the controller, the controller's Trouble LED turns on but not the sensor's.

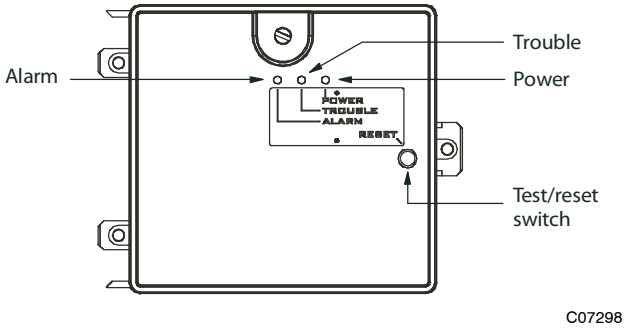

Fig. 29 - Controller Assembly

NOTE: All troubles are latched by the duct smoke detector. The trouble condition must be cleared and then the duct smoke detector must be reset in order to restore it to the normal state.

Table 3 – Detector Indicators

CONTROL OR INDICATOR	DESCRIPTION
Magnetic test/reset switch	Resets the sensor when it is in the alarm or trouble state. Activates or tests the sensor when it is in the normal state.
Alarm LED	Indicates the sensor is in the alarm state.
Trouble LED	Indicates the sensor is in the trouble state.
Dirty LED	Indicates the amount of environmental compensation used by the sensor (flashing continuously = 100%)
Power LED	Indicates the sensor is energized.

Resetting Alarm and Trouble Condition Trips:

Manual reset is required to restore smoke detector systems to Normal operation. For installations using two sensors, the duct smoke detector does not differentiate which sensor signals an alarm or trouble condition. Check each sensor for Alarm or Trouble status (indicated by LED). Clear the condition that has generated the trip at this sensor. Then reset the sensor by pressing and holding the reset button (on the side) for 2 seconds. Verify that the sensor's Alarm and Trouble LEDs are now off. At the controller, clear its Alarm or Trouble state by pressing and holding the manual reset button (on the front cover) for 2 seconds. Verify that the controller's Alarm and Trouble LEDs are now off. Replace all panels.

Troubleshooting

Controller's Trouble LED is On

1. Check the Trouble LED on each sensor connected to the controller. If a sensor's Trouble LED is on, determine the cause and make the necessary repairs.
2. Check the wiring between the sensor and the controller. If wiring is loose or missing, repair or replace as required.

Controller's Trouble LED is Flashing

1. One or both of the sensors is 100% dirty.
2. Determine which Dirty LED is flashing then clean that sensor assembly as described in the detector cleaning section.

Sensor's Trouble LED is On

1. Check the sensor's Dirty LED. If it is flashing, the sensor is dirty and must be cleaned.
2. Check the sensor's cover. If it is loose or missing, secure the cover to the sensor housing.
3. Replace sensor assembly.

Sensor's Power LED is Off

1. Check the controller's Power LED. If it is off, determine why the controller does not have power and make the necessary repairs.
2. Check the wiring between the sensor and the controller. If wiring is loose or missing, repair or replace as required.

Controller's Power LED is Off

1. Make sure the circuit supplying power to the controller is operational. If not, make sure JP2 and JP3 are set correctly on the controller before applying power.
2. Verify that power is applied to the controller's supply input terminals. If power is not present, replace or repair wiring as required.

Remote Test/Reset Station's Trouble LED Does Not flash When Performing a Dirty Test, But the Controller's Trouble LED Does

1. Verify that the remote test/station is wired as shown in Fig. 27. Repair or replace loose or missing wiring.
2. Configure the sensor dirty test to activate the controller's supervision relay. See "Changing sensor dirty test operation."

Sensor's Trouble LED is On, But the Controller's Trouble LED is OFF

Remove JP1 on the controller.

PROTECTIVE DEVICES

Compressor Protection

Overcurrent

The compressor has internal linebreak motor protection.

Overtemperature

The compressor has an internal protector to protect it against excessively high discharge gas temperatures.

High Pressure Switch

The system is provided with a high pressure switch mounted on the discharge line. The switch is stem-mounted and brazed into the discharge tube. Trip setting is 630 psig +/- 10 psig (4344 +/- 69 kPa) when hot. Reset is automatic at 505 psig (3482 kPa).

Low Pressure Switch

The system is protected against a loss of charge and low evaporator coil loading condition by a low pressure switch located on the suction line near the compressor. The switch is stem-mounted. Trip setting is 54 psig +/- 5 psig (372 +/- 34 kPa). Reset is automatic at 117 +/- 5 psig (807 +/- 34 kPa).

Evaporator Freeze Protection

The system is protected against evaporator coil frosting and low temperature conditions by a temperature switch mounted on the evaporator coil hairpin. Trip setting is 30°F +/- 5°F (-1°C +/- 3°C). Reset is automatic at 45°F (7°C).

Supply (Indoor) Fan Motor Protection

Disconnect and lockout power when servicing fan motor.

The standard supply fan motor is equipped with internal overcurrent and overtemperature protection. Protection devices reset automatically.

The High Static option supply fan motor is equipped with a pilot-circuit Thermix combination overtemperature/ overcurrent protection device. This device resets automatically. Do not bypass this switch to correct trouble. Determine the cause and correct it.

Condenser Fan Motor Protection

The condenser fan motor is internally protected against overtemperature.

Relief Device

A soft solder joint at the suction service access port provides pressure relief under abnormal temperature and pressure conditions (i.e., fire in building). Protect this joint during brazing operations near this joint.

Control Circuit, 24-V

The control circuit is protected against overcurrent conditions by a circuit breaker mounted on control transformer TRAN. Reset is manual.

GAS HEATING SYSTEM

General

The heat exchanger system consists of a gas valve feeding multiple inshot burners off a manifold. The burners fire into matching primary tubes. The primary tubes discharge into combustion plenum where gas flow converges into secondary tubes. The secondary tubes exit into the induced draft fan wheel inlet. The induced fan wheel discharges into a flue passage and flue gases exit out a flue hood on the side of the unit. The induced draft fan motor includes a Hall Effect sensor circuit that confirms adequate wheel speed via the Integrated Gas Control (IGC) board. Safety switches include a Rollout Switch (at the top of the burner compartment) and a limit switch (mounted through the fan deck, over the tubes). (See Fig. 30 and Fig. 31.)

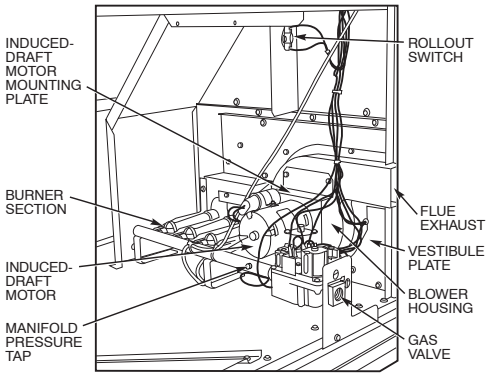

C06152

Fig. 30 - Burner Section Details

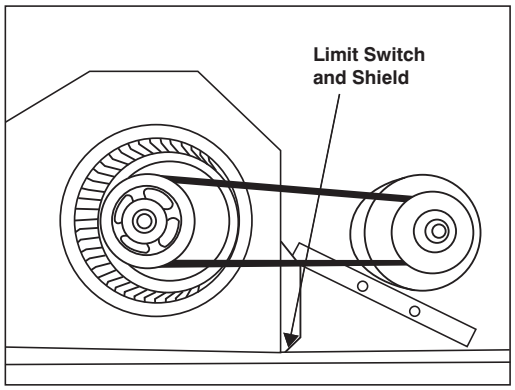

C08284

Fig. 31 - Limit Switch Location

Fuel Types and Pressures

Natural Gas — The 48LC unit is factory-equipped for use with Natural Gas fuel at elevation under 2000 ft (610 m). See section Orifice Replacement for information in modifying this unit for installation at elevations above 2000 ft (610 m).

Gas line pressure entering the unit's main gas valve must be within specified ranges. Adjust unit gas regulator valve as required or consult local gas utility.

Table 4 – Natural Gas Supply Line Pressure Ranges

UNIT MODEL	UNIT SIZE	MIN	MAX
48LCD/E/L/M/S/R*	04, 05, 06	4.0 in. wg (996 Pa)	13.0 in. wg (3240 Pa)
48LCF/N/T* (High Heat units only)	05, 06	5.0 in. wg (1245 Pa)	13.0 in. wg (3240 Pa)

Manifold pressure is factory-adjusted for NG fuel use. Adjust as required to obtain best flame characteristic.

Table 5 – Natural Gas Manifold Pressure Ranges

UNIT MODEL	UNIT SIZE	HIGH FIRE	LOW FIRE
48LCD/E/L/M/S/R*	04, 05, 06	3.5 in. wg (872 Pa)	1.7 in. Wg (423 Pa)
48LCF/N/T* (High Heat units only)	05, 06	3.5 in. wg (872 Pa)	1.7 in. Wg (423 Pa)

Liquid Propane — Accessory packages are available for field-installation that will convert the 48LC unit (except low NO_x model) to operate with Liquid Propane (LP) fuels. These kits include new orifice spuds, new springs for gas valves and a supply line low pressure switch. See section on Orifice Replacement for details on orifice size selections.

Low NO_x models include specially-sized orifices and use of different flue flow limits and tube baffles. Because of these extra features, conversion of these models to LP is not recommended.

Fuel line pressure entering unit gas valve must remain within specified range.

Table 6 – Liquid Propane Supply Line Pressure Ranges

UNIT MODEL	UNIT SIZE	MIN	MAX
48LCD/E/S/R*	04, 05, 06	11.0 in. wg (2740 Pa)	13.0 in. wg (3240 Pa)
48LCF/T* (High Heat units only)	05, 06	11.0 in. wg (2740 Pa)	13.0 in. wg (3240 Pa)

Manifold pressure for LP fuel use must be adjusted to specified range. Follow instructions in the accessory kit to make initial readjustment.

Table 7 – Liquid Propane Manifold Pressure Ranges

UNIT MODEL	UNIT SIZE	HIGH FIRE	LOW FIRE
48LCD/E/S/R*	04, 05, 06	10.0 in. wg (2490 Pa)	5.0in. Wg (1245 Pa)
48LCF/T* (High Heat units only)	05, 06	10.0 in. wg (2490 Pa)	5.0in. Wg (1245 Pa)

Supply Pressure Switch — The LP conversion kit includes a supply low pressure switch. The switch contacts (from terminal C to terminal NO) will open the gas valve power whenever the supply line pressure drops below the setpoint. See Fig. 32 and Fig. 33. If the low pressure remains open for 15 minutes during a call for heat, the IGC circuit will initiate a Ignition Fault (5 flashes) lockout. Reset of the low pressure switch is automatic on rise in supply line pressure. Reset of the IGC requires a recycle of unit power after the low pressure switch has closed.

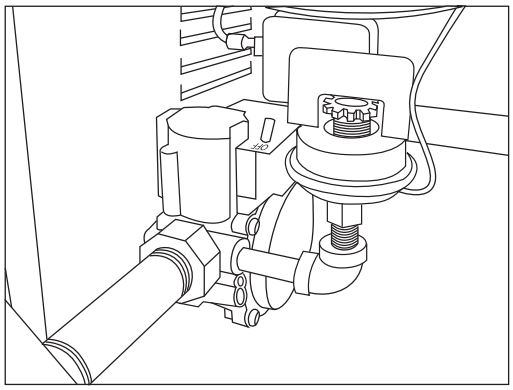

C08238

Fig. 32 - LP Low Pressure Switch (Installed)

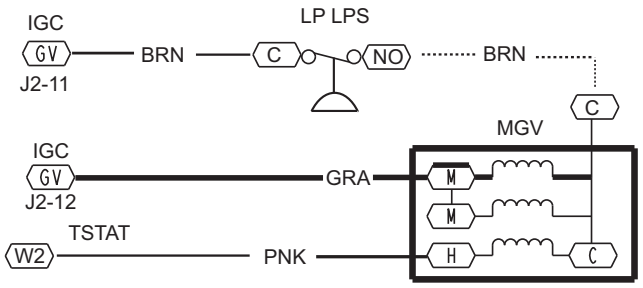

C08285

Fig. 33 - LP Supply Line Low Pressure Switch Wiring

This switch also prevents operation when the propane tank level is low which can result in gas with a high concentration of impurities, additives, and residues that have settled to the bottom of the tank. Operation under these conditions can cause harm to the heat exchanger system. Contact your fuel supplier if this condition is suspected.

Flue Gas Passageways

To inspect the flue collector box and upper areas of the heat exchanger:

1. Remove the combustion blower wheel and motor assembly according to directions in Combustion-Air Blower section. See Fig. 34.
2. Remove the flue cover to inspect the heat exchanger.
3. Clean all surfaces as required using a wire brush.

Combustion-Air Blower

Clean periodically to assure proper airflow and heating efficiency. Inspect blower wheel every fall and periodically during heating season. For the first heating season, inspect blower wheel bi-monthly to determine proper cleaning frequency.

To access burner section, slide the sliding burner partition out of the unit.

To inspect blower wheel, shine a flashlight into draft hood opening. If cleaning is required, remove motor and wheel as follows:

1. Slide burner access panel out.
2. Remove the 7 screws that attach induced-draft motor housing to vestibule plate. (See Fig. 34.)
3. The blower wheel can be cleaned at this point. If additional cleaning is required, continue with Steps 4 and 5.
4. To remove blower from the motor shaft, remove 2 setscrews.
5. To remove motor, remove the 4 screws that hold the motor to mounting plate. Remove the motor cooling fan by removing one setscrew. Then remove nuts that hold motor to mounting plate.
6. To reinstall, reverse the procedure outlined above.

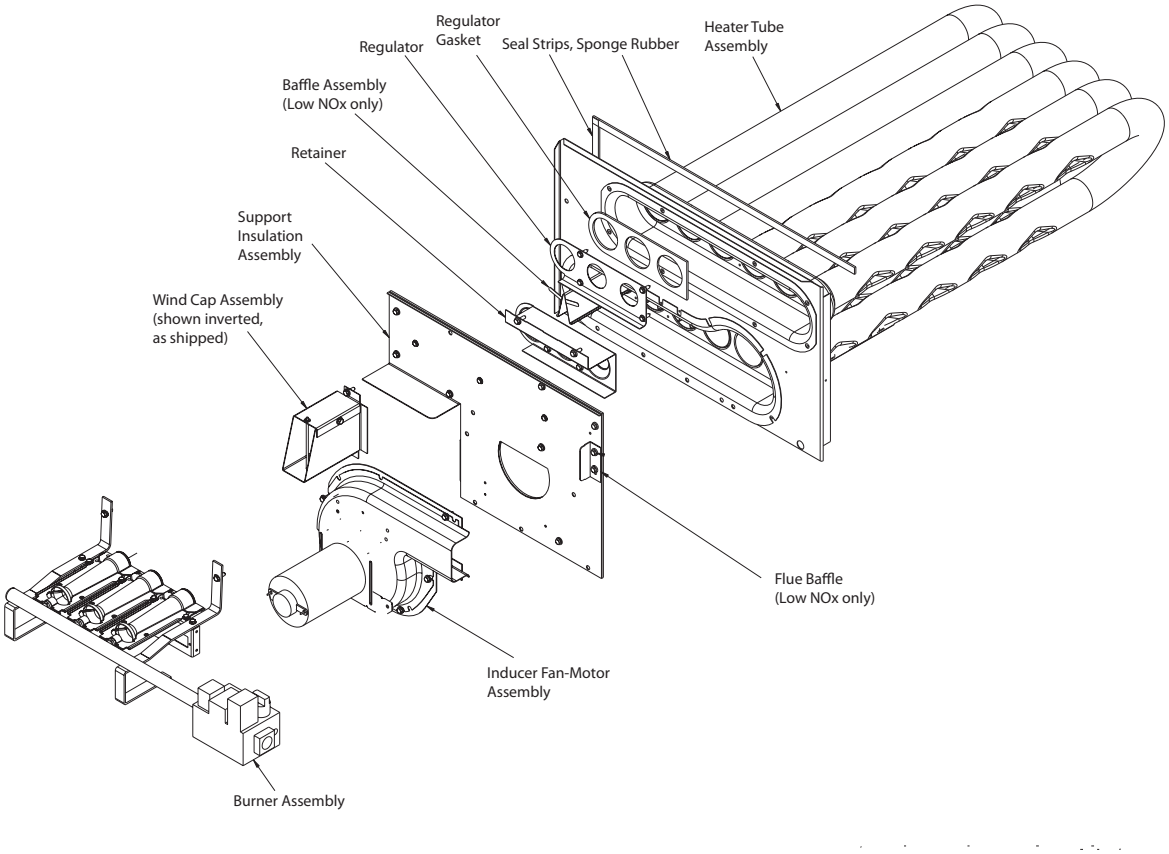

Fig. 34 - Heat Exchanger Assembly

48LC

Burners and Igniters

⚠ CAUTION

EQUIPMENT DAMAGE HAZARD

Failure to follow this caution may result in equipment damage.

When working on gas train, do not hit or plug orifice spuds.

Main Burners

To access burners, remove burner access panel and slide out burner partition. At the beginning of each heating season, inspect for deterioration or blockage due to corrosion or other causes. Observe the main burner flames and adjust, if necessary.

Orifice projection — Refer to Fig. 35 for maximum projection dimension for orifice face to manifold tube.

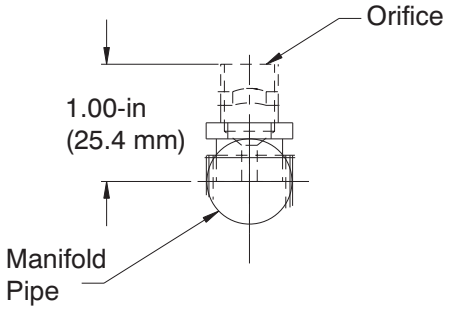

Fig. 35 - Orifice Projection

Removal and Replacement of Gas Train

See Fig. 30, Fig. 34 and Fig. 36.

1. Shut off manual gas valve.
2. Shut off power to unit.
3. Slide out burner partition.
4. Disconnect gas piping at unit gas valve.
5. Remove wires connected to gas valve. Mark each wire.

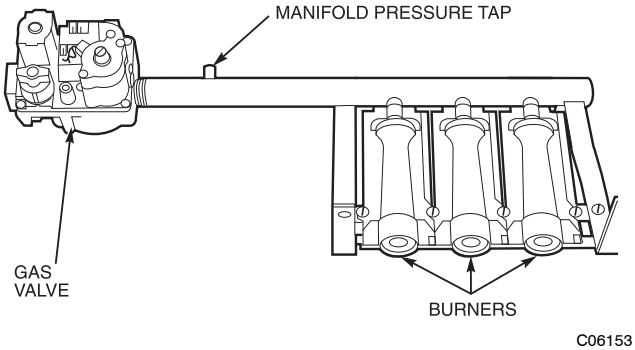

Fig. 36 - Burner Tray Details

6. Remove igniter wires and sensor wires at the Integrated Gas Unit Controller (IGC). (See Fig. 37.)
7. Remove the 2 screws that attach the burner rack to the vestibule plate (Fig. 34).
8. Slide the burner tray out of the unit (Fig. 36).
9. To reinstall, reverse the procedure outlined above.

Cleaning and Adjustment

1. Remove burner rack from unit as described in Removal and Replacement of Gas Train section, above.
2. Inspect burners; if dirty, remove burners from rack. (Mark each burner to identify its position before removing from the rack.)
3. Use a soft brush to clean burners and cross-over port as required.
4. Adjust spark gap. (See Fig. 38.)
5. If factory orifice has been removed, check that each orifice is tight at its threads into the manifold pipe and that orifice projection does not exceed maximum valve. See Fig. 35.
6. Reinstall burners on rack in the same locations as factory-installed. (The outside crossover flame regions of the outermost burners are pinched off to prevent excessive gas flow from the side of the burner assembly. If the pinched crossovers are installed between two burners, the flame will not ignite properly.)

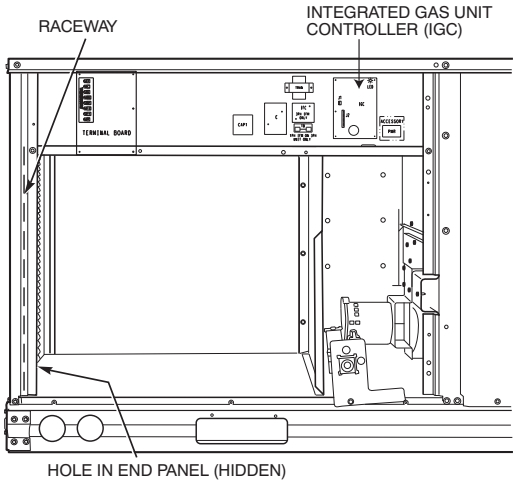

Fig. 37 - Unit Control Box/IGC Location

7. Reinstall burner rack as described in Removal and Replacement of Gas Train section, above.

Gas Valve — All three-phase models (except Low NO_x) are equipped with 2-stage gas valves. Single-phase models and all Low NO_x models are equipped with single-stage gas valves. See Fig. 39 for locations of adjustment screws and features on the gas valves.

To adjust gas valve pressure settings:

IMPORTANT: Leak check all gas connections including the main service connection, gas valve, gas spuds, and manifold pipe plug. All leaks must be repaired before firing unit.

Check Unit Operation and Make Necessary Adjustments

NOTE: Gas supply pressure at gas valve inlet must be within specified ranges for fuel type and unit size. See Table 4 and Table 5.

1. Remove manifold pressure tap plug from manifold and connect pressure gauge or manometer. (See Fig. 36.)
2. Turn on electrical supply.
3. Turn on unit main gas valve.
4. Set room thermostat to call for heat. If unit has two-stage gas valve, verify high-stage heat operation before attempting to adjust manifold pressure.
5. When main burners ignite, check all fittings, manifold, and orifices for leaks.
6. Adjust high-stage pressure to specified setting by turning the plastic adjustment screw clockwise to increase pressure, counter-clockwise to decrease pressure.
7. **For Two-Stage Gas Valves** set room thermostat to call for low-stage heat. Adjust low-stage pressure to specified setting.
8. Replace regulator cover screw(s) when finished.
9. With burner access panel removed, observe unit heating operation in both high stage and low stage operation if so equipped. Observe burner flames to see if they are blue in appearance, and that the flames are approximately the same for each burner.
10. Turn off unit, remove pressure manometer and replace the 1/8 in. pipe fitting on the gas manifold. (See Fig. 35.)

Limit Switch

Remove blower access panel. Limit switch is located on the fan deck. See Fig. 31.

Burner Ignition

Unit is equipped with a direct spark ignition 100% lockout system. Integrated Gas Unit Controller (IGC) is located in the control box. See Fig. 37. The IGC contains a self-diagnostic LED (light-emitting diode). A single LED (see Fig. 40) on the IGC provides a visual display of operational or sequential problems when the power supply is uninterrupted. When a break in power occurs, the IGC will be reset (resulting in a loss of fault history) and the indoor (evaporator) fan ON/OFF times will be reset. The LED error code can be observed through the viewport. During servicing refer to the label on the control box cover or Table 8 for an explanation of LED error code descriptions.

If lockout occurs, unit may be reset by interrupting power supply to unit for at least 5 seconds.

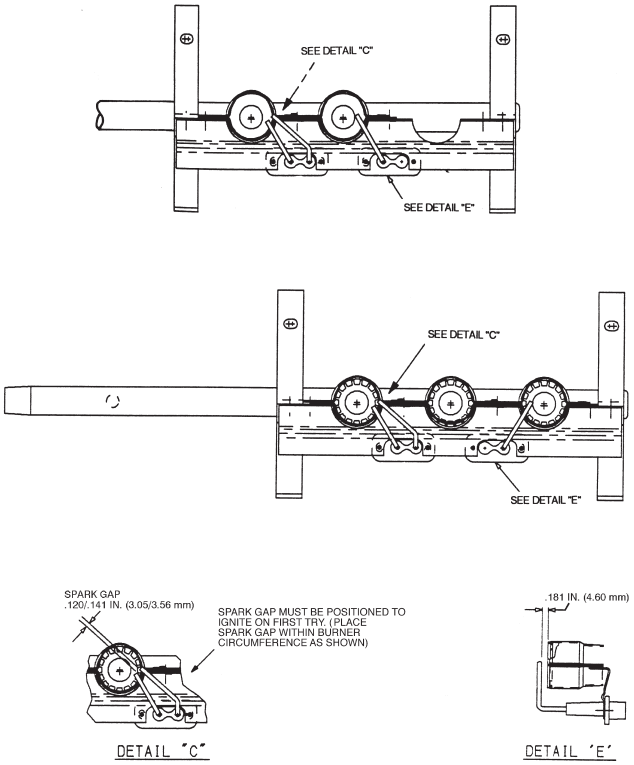

Fig. 38 - Spark Adjustment (04-06)

Table 8 – LED Error Code Description*

LED INDICATION	ERROR CODE DESCRIPTION
ON	Normal Operation
OFF	Hardware Failure
1 Flash†	Evaporator Fan On/Off Delay Modified
2 Flashes	Limit Switch Fault
3 Flashes	Flame Sense Fault
4 Flashes	4 Consecutive Limit Switch Faults
5 Flashes	Ignition Lockout Fault
6 Flashes	Induced – Draft Motor Fault
7 Flashes	Rollout Switch Fault
8 Flashes	Internal Control Fault
9 Flashes	Software Lockout

LEGEND
LED – Light Emitting Diode
* A 3 – second pause exists between LED error code flashes. If more than one error code exists, all applicable codes will be displayed in numerical sequence.
† Indicates a code that is not an error. The unit will continue to operate when this code is displayed.

IMPORTANT: Refer to Troubleshooting Table 13 and Table 14 for additional information.

Orifice Replacement

This unit uses orifice type LH32RFnnn (where nnn indicates orifice reference size). When replacing unit orifices, order the necessary parts via Carrier RCD. See Table 10 for available orifice sizes. See Table 11 and Table 12 for orifice sizes for Natural Gas and LP fuel usage at various elevations above sea level.

Check that each replacement orifice is tight at its threads into the manifold pipe and that orifice projection does not exceed maximum value. See Fig. 35.

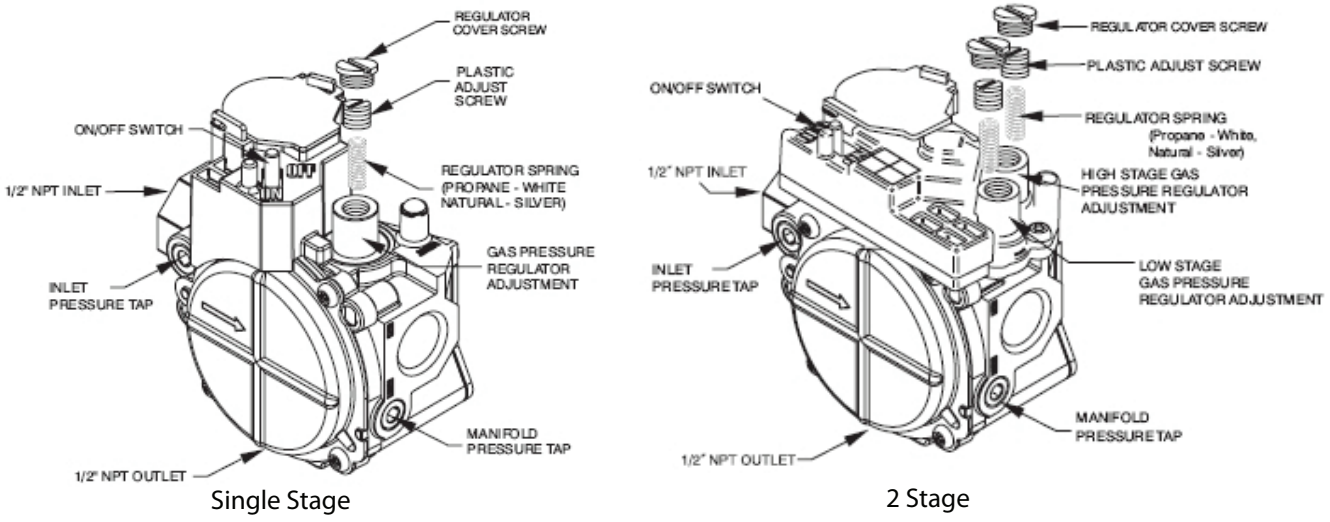

Fig. 39 - Gas Valves

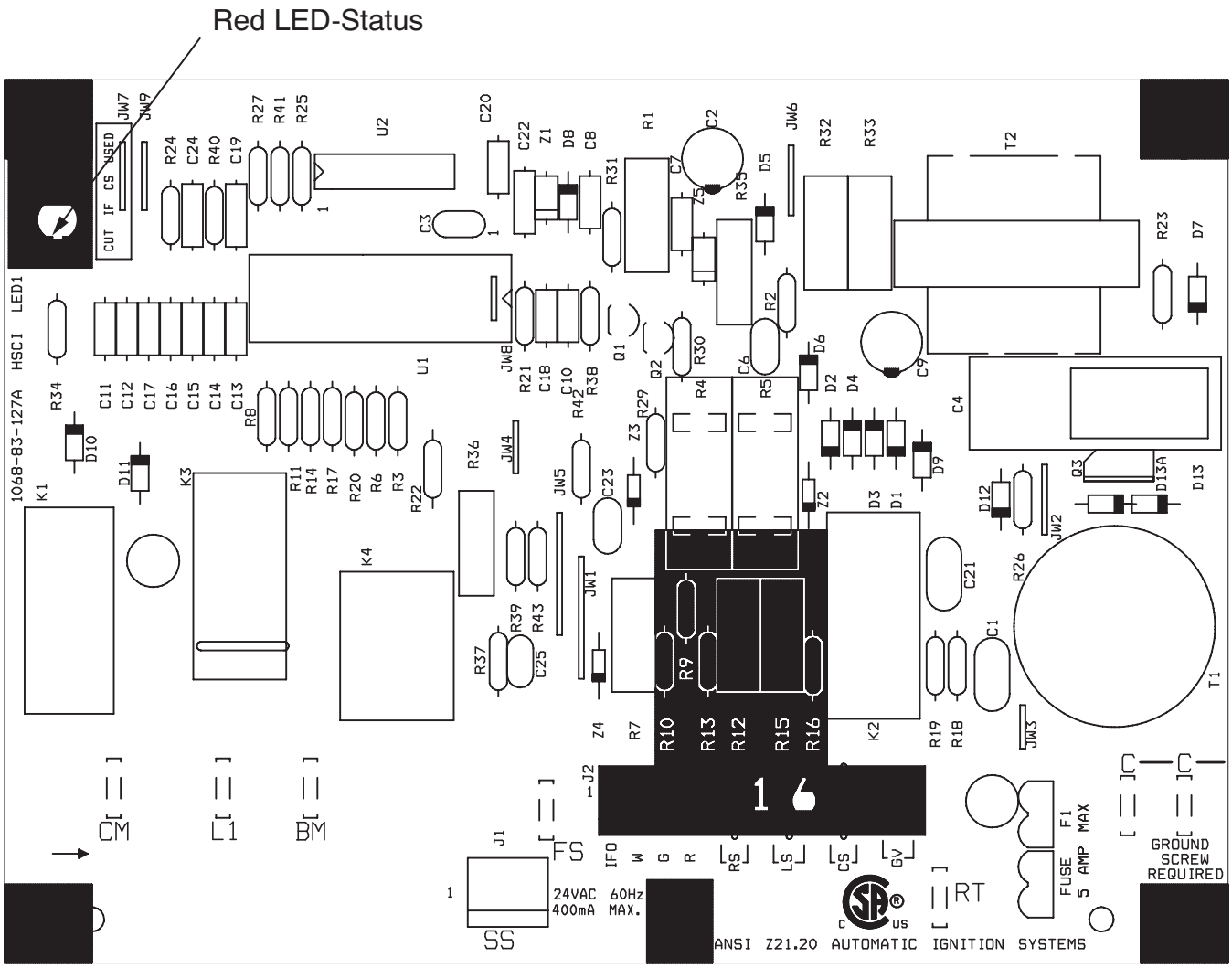

Fig. 40 - Integrated Gas Control (IGC) Board

Table 9 – IGC Connections

TERMINAL LABEL	POINT DESCRIPTION	SENSOR LOCATION	TYPE OF I/O	CONNECTION PIN NUMBER
INPUTS				
RT, C	Input power from TRAN 1	control box	24 VAC	—
SS	Speed sensor	gas section	analog input	J1, 1-3
FS, T1	Flame sensor	gas section	switch input	—
W	Heat stage 1	CTB	24 VAC	J2, 2
RS	Rollout switch	gas section	switch input	J2, 5-6
LS	Limit switch	fan section	switch input	J2, 7-8
CS	Centrifugal switch (not used)	—	switch input	J2, 9-10
OUTPUTS				
L1, CM	Induced draft combustion motor	gas section	line VAC	
IFO	Indoor fan	control box	relay	J2, 1
GV	Gas valve (heat stage 1)	gas section	relay	J2, 11-12

Table 10 – Orifice Sizes

ORIFICE DRILL SIZE	CARRIER PART NUMBER	DRILL DIA. (in.)
#30	LH32RF129	0.1285
1/8	LH32RF125	0.1250
#31	LH32RF120	0.1200
#32	LH32RF116	0.1160
#33	LH32RF113	0.1130
#34	LH32RF111	0.1110
#35	LH32RF110	0.1100
#36	LH32RF105	0.1065
#37	LH32RF104	0.1040
#38	LH32RF102	0.1015
#39	LH32RF103	0.0995
#40	LH32RF098	0.0980
#41	LH32RF096	0.0960
#42	LH32RF094	0.0935
#43	LH32RF089	0.0890
#44	LH32RF086	0.0860
#45	LH32RF082	0.0820
#46	LH32RF080	0.0810
#47	LH32RF079	0.0785
#48	LH32RF076	0.0760
#49	LH32RF073	0.0730
#50	LH32RF070	0.0700
#51	LH32RF067	0.0670
#52	LH32RF065	0.0635
#53	LH32RF060	0.0595
#54	LH32RF055	0.0550
#55	LH32RF052	0.0520
#56	LH32RF047	0.0465
#57	LH32RF043	0.0430
#58	LH32RF042	0.0420

Table 11 – Altitude Compensation‡ (48LCD/E/F/S/R/T*04-06)

ELEVATION ft (m)	72,000 BTUH Nominal		115,000 BTUH Nominal		150,000 BTUH Nominal	
	NG Orifice Size	LP Orifice Size	NG Orifice Size	LP Orifice Size	NG Orifice Size	LP Orifice Size
0 – 2000 (610)	33[1]	51[4]	33[1]	50[3]	†30	46[3]
2000 (610)	35[1]	51[4]	35[1]	51[4]	†30	47[3]
3000 (914)	35[1]	52[4]	35[1]	51[4]	31[1]	47[3]
4000 (1219)	36[1]	52[4]	36[1]	51[4]	31[1]	48[3]
5000 (1524)	36[1]	52[4]	36[1]	51[4]	31[1]	48[3]
6000 (1829)	37[2]	52[4]	37[2]	52[4]	31[1]	48[3]
7000 (2134)	38[2]	53[4]	38[2]	52[4]	32[1]	49[3]
8000 (2438)	39[2]	53[4]	39[2]	52[4]	33[1]	49[3]
9000 (2743)	†40	53[4]	†40	53[4]	34[1]	50[3]
10000 (3048)	†41	54[4]	†41	53[4]	35[1]	50[3]
11000 (3353)	†42	54[4]	†42	53[4]	36[1]	51[4]
12000 (3658)	†43	54[4]	†43	54[4]	37[2]	51[4]
13000 (3962)	†43	55[4]	†43	54[4]	38[2]	52[4]
14000 (4267)	44[2]	†56	44[2]	55[4]	†40	53[4]

LEGEND
NG = Natural Gas LP = Liquid Propane

‡ As the height above sea level increases, there is less oxygen per cubic ft. of air. Therefore, heat input rate should be reduced at higher altitudes.

† Not included in kit. May be purchased separately through dealer.

1 = CRLPELEV001A00
2 = CRLPELEV002A00
3 = CRLPELEV003A00
4 = CRLPELEV004A00

Table 12 – Altitude Compensation‡ (48LCL/M/N*04-06) - Low NO_x Units

ELEVATION ft (m)	60,000, 90,000 BTUH Nominal	120,000 BTUH Nominal
	NG Orifice Size	NG Orifice Size
0 – 2000 (610)	38[2]	32[1]
2000 (610)	39[2]	33[1]
3000 (914)	†40	33[1]
4000 (1219)	†41	35[1]
5000 (1524)	†41	35[1]
6000 (1829)	†42	36[1]
7000 (2134)	†42	36[1]
8000 (2438)	†43	37[2]
9000 (2743)	†43	38[2]
10000 (3048)	44[2]	†40
11000 (3353)	44[2]	†41
12000 (3658)	45[2]	†42
13000 (3962)	47[3]	†43
14000 (4267)	48[3]	†43

LEGEND
NG = Natural Gas
‡ As the height above sea level increases, there is less oxygen per cubic ft. of air. Therefore, heat input rate should be reduced at higher altitudes.
† Not included in kit. May be purchased separately through dealer.

1 = CRLPELEV001A00
2 = CRLPELEV002A00
3 = CRLPELEV003A00

Minimum heating entering air temperature

When operating on first stage heating, the minimum temperature of air entering the dimpled heat exchanger is 50°F continuous and 45°F intermittent for standard heat exchangers and 40°F continuous and 35°F intermittent for stainless steel heat exchangers. To operate at lower mixed-air temperatures, a field-supplied outdoor-air thermostat must be used to initiate both stages of heat when the temperature is below the minimum required temperature to ensure full fire operation. Wire the outdoor-air thermostat OALT (part no. HH22AG106) in series with the second stage gas valve. See Fig. 41. Set the outdoor-air thermostat at 35°F for stainless steel heat exchangers or 45°F for standard heat exchangers. This temperature setting will bring on the second stage of heat whenever the ambient temperature is below the thermostat setpoint. Indoor comfort may be compromised when heating is initiated using low entering air temperatures with insufficient heating temperature rise.

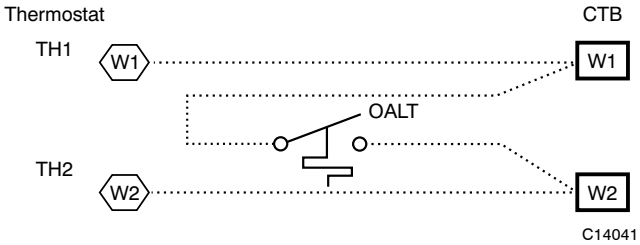

Fig. 41 - OATL Connections

Troubleshooting Heating System

Refer to Table 13 and Table 14 for additional troubleshooting topics.

Table 13 – Heating Service Analysis

PROBLEM	CAUSE	REMEDY
Burners Will Not Ignite.	Misaligned spark electrodes.	Check flame ignition and sensor electrode positioning. Adjust as needed.
	No gas at main burners.	Check gas line for air, purge as necessary. After purging gas line of air, allow gas to dissipate for at least 5 minutes before attempting to relight unit.
		Check gas valve.
	Water in gas line.	Drain water and install drip leg to trap water.
	No power to furnace.	Check power supply, fuses, wiring, and circuit breaker.
	No 24 v power supply to control circuit.	Check transformer. Transformers with internal overcurrent protection require a cool down period before resetting.
	Miswired or loose connections.	Check all wiring and wire nut connections.
	Burned–out heat anticipator in thermostat.	Replace thermostat.
	Broken thermostat wires.	Run continuity check. Replace wires, if necessary.
Inadequate Heating.	Dirty air filter.	Clean or replace filter as necessary.
	Gas input to unit too low.	Check gas pressure at manifold. Clock gas meter for input. If too low, increase manifold pressure, or replace with correct orifices.
	Unit undersized for application.	Replace with proper unit or add additional unit.
	Restricted airflow.	Clean filter, replace filter, or remove any restrictions.
	Blower speed too low.	Use high speed tap, increase fan speed, or install optional blower, as suitable for individual units.
	Limit switch cycles main burners.	Check rotation of blower, thermostat heat anticipator settings, and temperature rise of unit. Adjust as needed.
	Too much outdoor air.	Adjust minimum position.
		Check economizer operation.
Poor Flame Characteristics.	Incomplete combustion (lack of combustion air) results in: Aldehyde odors, CO, sooting flame, or floating flame.	Check all screws around flue outlets and burner compartment. Tighten as necessary.
		Cracked heat exchanger.
		Overfired unit — reduce input, change orifices, or adjust gas line or manifold pressure.
		Check vent for restriction. Clean as necessary.
		Check orifice to burner alignment.
Burners Will Not Turn Off.	Unit is locked into Heating mode for a one minute minimum.	Wait until mandatory one–minute time period has elapsed or reset power to unit.

Table 14 – IGC Board LED Alarm Codes

LED FLASH CODE	DESCRIPTION	ACTION TAKEN BY CONTROL	RESET METHOD	PROBABLE CAUSE
On	Normal Operation	—	—	—
Off	Hardware Failure	No gas heating.	—	Loss of power to the IGC. Check 5 amp fuse on IGC, power to unit, 24V circuit breaker, transformer, and wiring to the IGC.
2 Flashes	Limit Switch Fault	Gas valve and igniter Off. Indoor fan and inducer On.	Limit switch closed, or heat call (W) Off.	High temperature limit switch is open. Check the operation of the indoor (evaporator) fan motor. Ensure that the supply-air temperature rise is within the range on the unit nameplate. Check wiring and limit switch operation.
3 Flashes	Flame Sense Fault	Indoor fan and inducer On.	Flame sense normal. Power reset for LED reset.	The IGC sensed a flame when the gas valve should be closed. Check wiring, flame sensor, and gas valve operation.
4 Flashes	Four Consecutive Limit Switch Fault	No gas heating.	Heat call (W) Off. Power reset for LED reset.	4 consecutive limit switch faults within a single call for heat. See Limit Switch Fault.
5 Flashes	Ignition Fault	No gas heating.	Heat call (W) Off. Power reset for LED reset.	Unit unsuccessfully attempted ignition for 15 minutes. Check igniter and flame sensor electrode spacing, gaps, etc. Check flame sense and igniter wiring. Check gas valve operation and gas supply. Check gas valve connections to IGC terminals. BRN lead must be on Pin 11.
6 Flashes	Induced Draft Motor Fault	If heat off: no gas heating. If heat on: gas valve Off and inducer On.	Inducer sense normal, or heat call (W) Off.	Inducer sense On when heat call Off, or inducer sense Off when heat call On. Check wiring, voltage, and operation of IGC motor. Check speed sensor wiring to IGC.
7 Flashes	Rollout Switch Lockout	Gas valve and igniter Off. Indoor fan and inducer On.	Power reset.	Rollout switch has opened. Check gas valve operation. Check induced-draft blower wheel is properly secured to motor shaft.
8 Flashes	Internal Control Lockout	No gas heating.	Power reset.	IGC has sensed internal hardware or software error. If fault is not cleared by resetting 24 v power, replace the IGC.
9 Flashes	Temporary Software Lockout	No gas heating.	1 hour auto reset, or power reset.	Electrical interference is disrupting the IGC software.

LEGEND
IGC – Integrated Gas Unit Control
LED – Light–Emitting Diode
NOTES:

1. There is a 3–second pause between alarm code displays.
2. If more than one alarm code exists, all applicable alarm codes will be displayed in numerical sequence.
3. Alarm codes on the IGC will be lost if power to the unit is interrupted.

ECONOMIZER SYSTEMS

The 48LC 04-06 units may be equipped with a factory-installed or accessory (field-installed) economizer system. Two types are available: with a logic control system (EconoMi$er X) and without a control system (EconoMi$er2, for use with external control systems such as RTU Open). See Fig. 42 for component locations on EconoMi$er2. See Fig. 43 for EconoMi$er2 wiring diagrams.

For details on operating 48LC units equipped with the factory-installed EconoMi$er X option, refer to *EconoMi$er X Factory-Installed Option Low Leak Economizer for 2 Speed SAV™ (Staged Air Volume) Systems* (Catalog No. LLECON-02SI, or later).

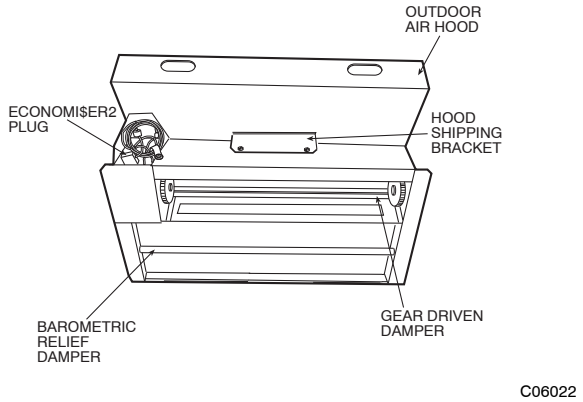

Fig. 42 - EconoMi$er2 Component Locations

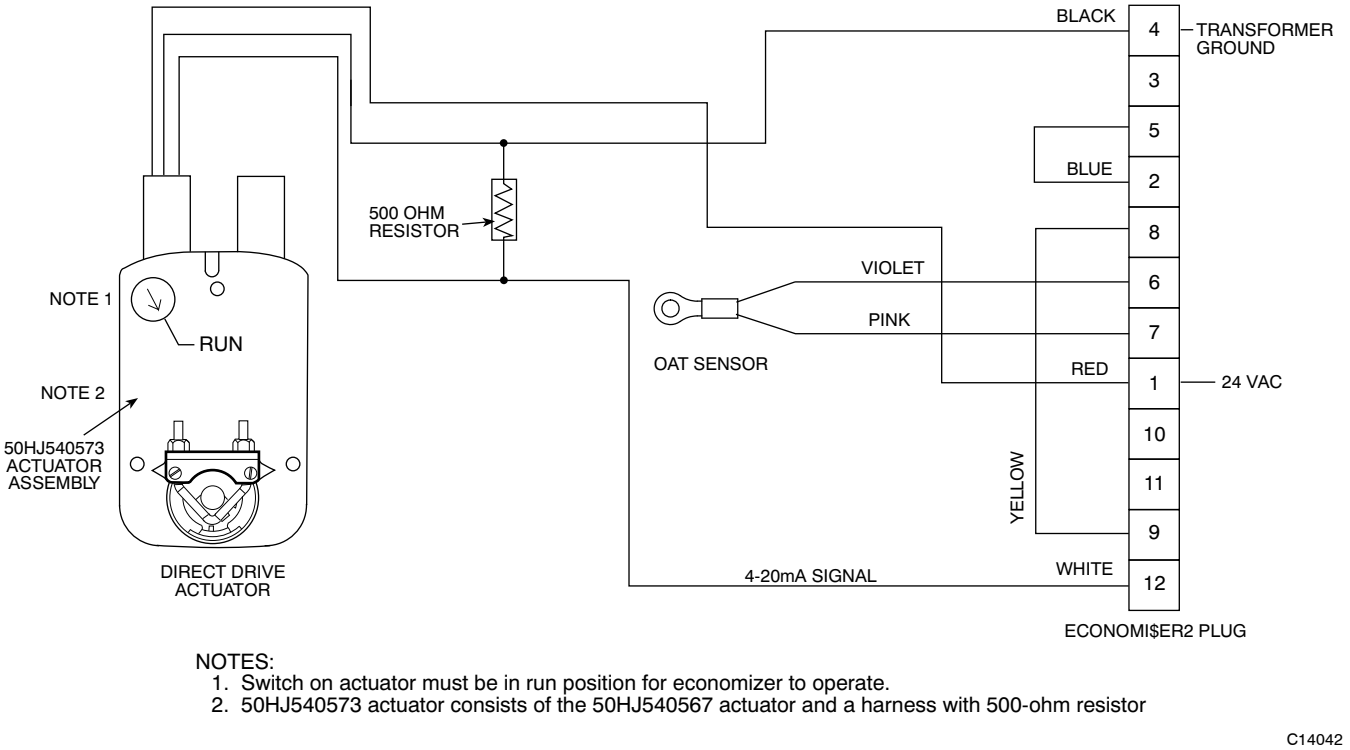

Fig. 43 - EconoMi$er2 with 4 to 20 mA Control Wiring

ComfortLINK (Factory Option)

For details on operating 48LC 04-06 units equipped with the factory installed ComfortLINK option, refer to *Controls, Start-Up, Operation and Troubleshooting for 48/50LC 04-06 Single Package Rooftop Unit with ComfortLINK Controls* (Catalog No. 48-50LC-C01T, or later).

RTU Open (Factory Option)

For details on operating 48LC 04-06 units equipped with the factory installed RTU Open option, refer to *Controls, Start-Up, Operation and Troubleshooting for 48/50TC04-30, 50TCQ04-24, 48/50HC04-28, 50HCQ04-12, 48/50LC 04-06 Factory Installed Option RTU Open* (Catalog No. 48-50HCTQ-02T, or later).

VFD Operation with Remote Keypad

All 48LC size 04-06 units are equipped with a VFD (Variable Frequency Drive) to automatically adjust the indoor fan motor speed in sequence with the unit's ventilation, cooling and heating operation. The VFD keypad is included as standard on electro mechanical and RTU Open models.

For details on using the VFD keypad, see the APPENDIX at the end of the unit's Installation Instructions (refer to *48LC Single Package Rooftop Gas Heating/Electric Cooling Unit with Puron (R-410A) Refrigerant, Sizes: 04, 05, 06*).

WIRING DIAGRAMS

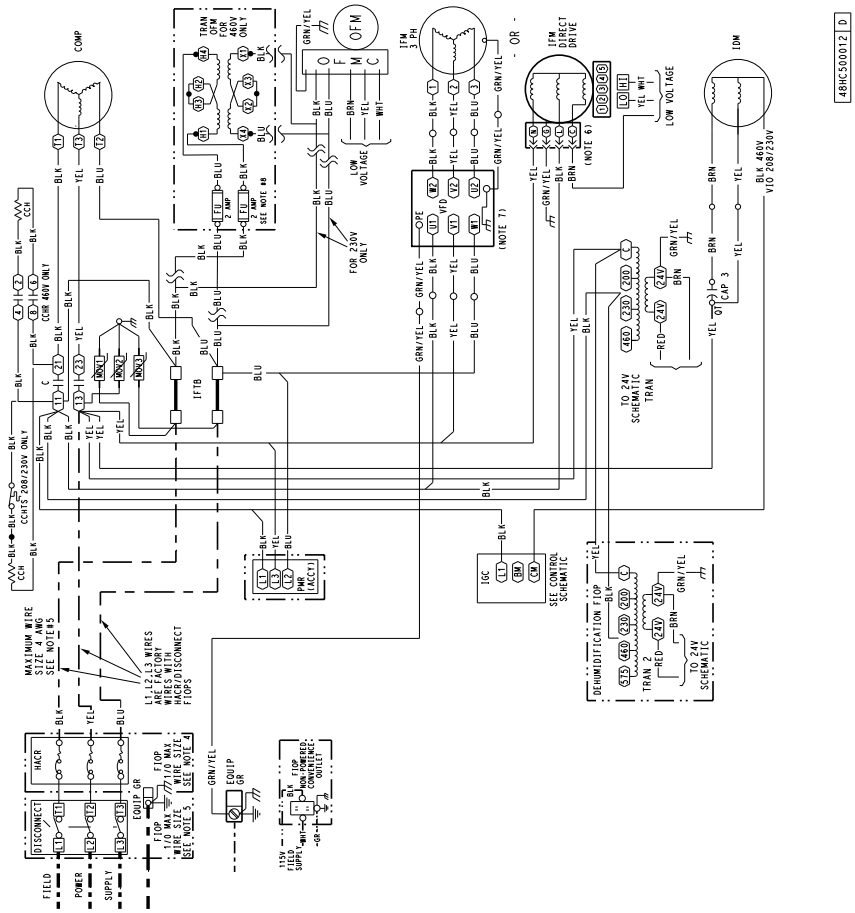

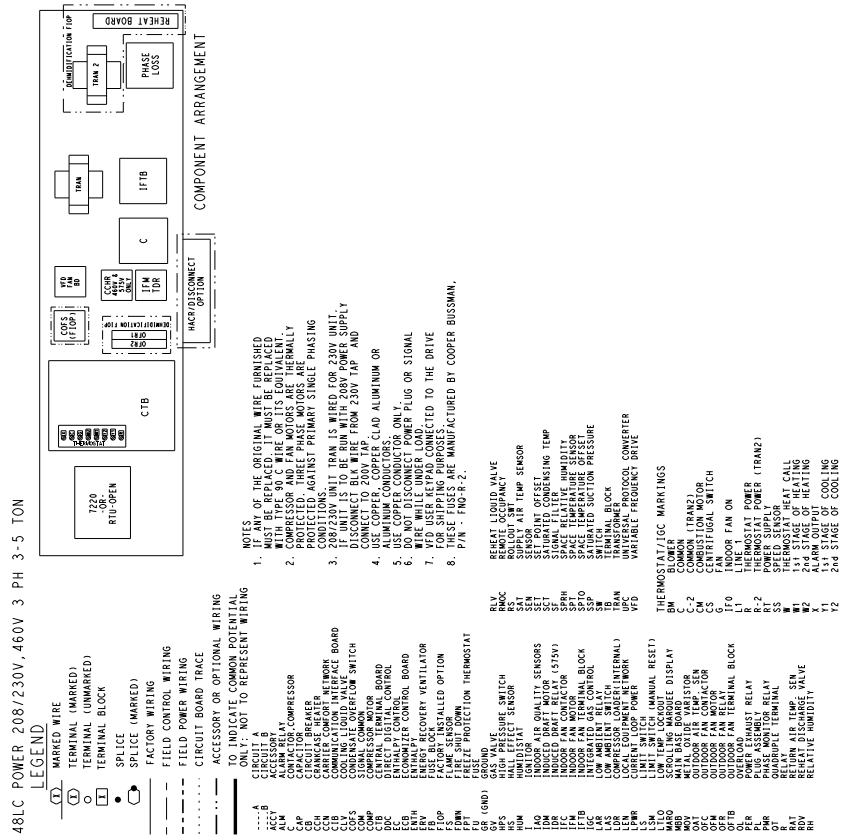

C14043

Fig. 44 - Unit Wiring Diagram - Power (208/230V, 460V 3 Phase)

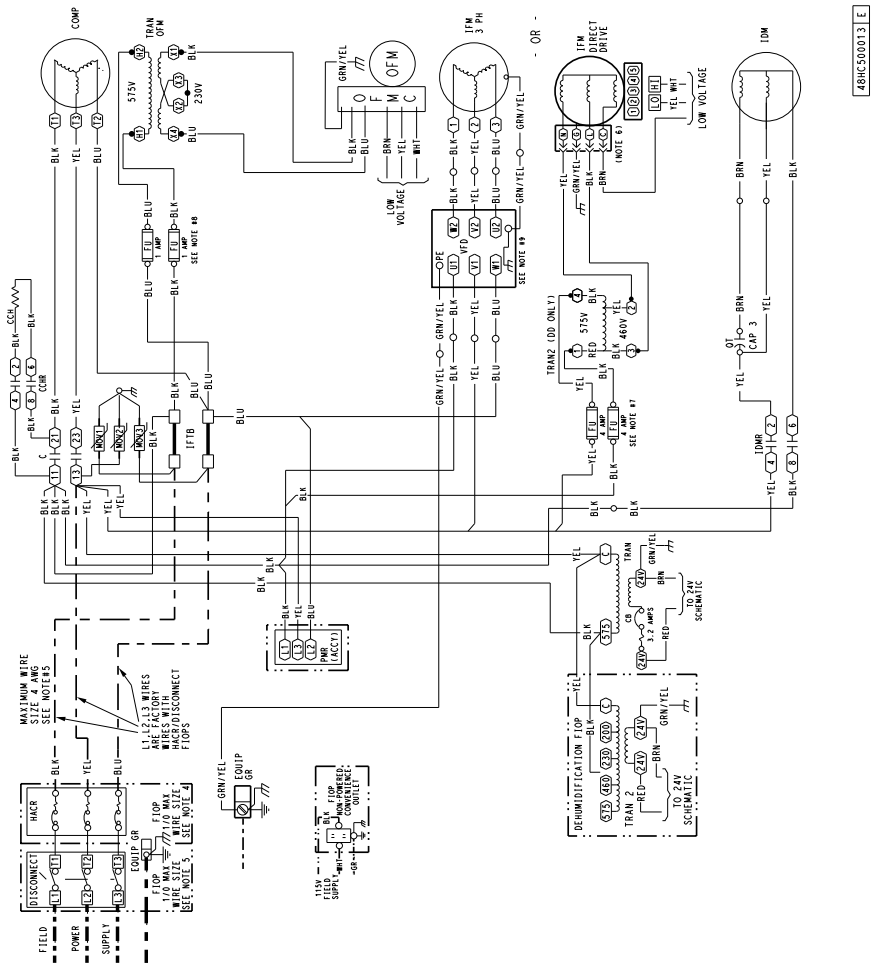

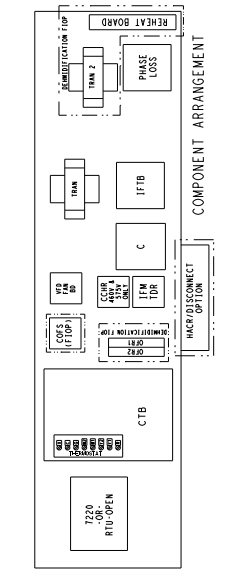

NOTES

1. IF ANY OF THE ORIGINAL WIRE FURNISHED MUST BE REPLACED, IT MUST BE REPLACED WITH TYPE 90 C WIRE OR ITS EQUIVALENT.
2. COMPRESSOR AND FAN MOTORS ARE THERMALLY PROTECTED. THREE PHASE MOTORS ARE PROTECTED AGAINST PRIMARY SINGLE PHASING CONDITIONS.
3. TRANS WIRED FOR 575V UNIT.
4. USE COPPER, COPPER CLAD ALUMINUM OR ALUMINUM CONDUCTORS.
5. USE COPPER CONDUCTOR ONLY.
6. DO NOT DISCONNECT POWER PLUG OR SIGNAL WIRE WHILE UNDER LOAD.
7. THESE FUSES ARE MANUFACTURED BY COOPER BUSSMANN, P/N - FNQ-R-4.
8. THESE FUSES ARE MANUFACTURED BY COOPER BUSSMANN, P/N - FNQ-R-1.
9. VFD USER KEYPAD CONNECTED TO THE DRIVE FOR SHIPPING PURPOSES.

48LC POWER 575-3-60 3-5 TON

LEGEND

MARKED WIRE
TERMINAL (MARKED)
TERMINAL (UNMARKED)
TERMINAL BLOCK
SPLICE
SPLICE (MARKED)
FACTORY WIRING
FIELD CONTROL WIRING
FIELD POWER WIRING
CIRCUIT BOARD TRACE
ACCESSORY OR OPTIONAL WIRING
TO INDICATE COMMON POTENTIAL ONLY; NOT TO REPRESENT WIRING

A	CIRCUIT A
ACCT	CIRCUIT B
ALM	ALARM RELAY
C	CONTACTOR,COMPRESSOR
CAP	CAPACITOR
CB	CIRCUIT BREAKER
CCH	CRANKCASE HEATER
CCN	CONSUMER CONNECT NETWORK
CIB	COMMUNICATION INTERFACE BOARD
CLV	COOLING LIQUID VALVE
COFS	COMPRESSOR OVERFLOW SWITCH
COM	SIGNAL COMMON
COMP	COMPRESSOR MOTOR
CTB	CONTROL TERMINAL BOARD
DDC	DIRECT DIGITAL CONTROL
EC	ENTHALPY CONTROL
ENTH	ENTHALPY CONTROL BOARD
ERV	ENERGY RECOVERY VENTILATOR
FOP	FACTORY INSTALLED OPTION
FS	FLAME SENSOR
FSDWN	FREEZE STAT/SHUTDOWN
FPT	FREEZE PROTECTION TSAT
FU	FUSE
GV	GAS VALVE
HPS	HIGH PRESSURE SWITCH
HS	HALL EFFECT SENSOR
HUM	HUMIDISTAT
I	IGNITOR
IAQ	INDOOR AIR QUALITY SENSORS
IDM	INDOOR FAN MOTOR
IDR	INDUCED DRAFT RELAY (575V)
IFC	INDOOR FAN CONTACTOR
IFM	INDOOR FAN MOTOR
IFTB	INDOOR FAN TERMINAL BLOCK
IGC	INTEGRATED GAS CONTROL
LAT	LEAVING AIR TEMP
LAS	LOW AMBIENT SWITCH
LBR	COMPRESSOR LOADER(INTERNAL)
LCTB	LOW VOLTAGE CONTROL BOARD
LPWR	CURRENT LOOP POWER
LTLO	LOW TEMP LOCKOUT
LWT	LEAVING WATER TEMP
LSM	LIMIT SWITCH (MANUAL RESET)
MARQ	SCROLLING MARQUEE DISPLAY
MBB	MAIN BURNER BOARD
MOV	METAL OXIDE VARISTOR
OAT	OUTDOOR AIR TEMP. SEN
OFC	OUTDOOR FAN CONTACTOR
OFM	OUTDOOR FAN MOTOR
OFR	OUTDOOR FAN RELAY
OFTB	OUTDOOR FAN TERMINAL BLOCK
OL	OVERLOAD
PER	POWER EXHAUST RELAY
PES	POWER EXHAUST SWITCH
PMR	PHASE MONITOR RELAY
QT	QUADRUPLE TERMINAL
R	RELAY
RAT	RETURN AIR TEMP. SEN
RDV	REHEAT DISCHARGE VALVE
REV	REVERSING VALVE
RLV	REHEAT LIQUID VALVE
RMOC	REMOTE OCCUPANCY
RPS	REMOTE PANEL SWITCH
SAT	SUPPLY AIR TEMP SENSOR
SEN	SENSOR
SCOF	SATURATED CONDENSING TEMP OFFSET
SCT	SATURATED CONDENSING TEMP
SPRH	SPACE RELATIVE HUMIDITY
SPT	SPACE TEMPERATURE SENSOR
SPTO	SPACE TEMPERATURE OFFSET
SSP	SATURATED SUCTION PRESSURE
SW	SWITCH
TB	TERMINAL BLOCK
TRAN	TRANSFORMER
UPCW	UNIVERSAL PROTOCOL CONVERTER
VFD	VARIABLE FREQUENCY DRIVE
THERMOSTAT/IGC MARKINGS	
DH	HUMIDIST
C	COMMON
C2	COMMON (TRAN2)
CM	COMBUSTION MOTOR
CS	COMBUSTION AIR SWITCH
G	FAN
ITO	INDOOR FAN ON
L1	LINE 1
R	THERMOSTAT POWER
R-2	THERMOSTAT POWER (TRAN2)
RH	REMOTE HUMIDIST
SS	SPEED SENSOR
W	THERMOSTAT HEAT CALL
W1	1st STAGE OF HEATING
W2	2nd STAGE OF HEATING
X	ALARM OUTPUT
Y1	1st STAGE OF COOLING
Y2	2nd STAGE OF COOLING

C14044

Fig. 45 - Unit Wiring Diagram - Power (575V 3 Phase)

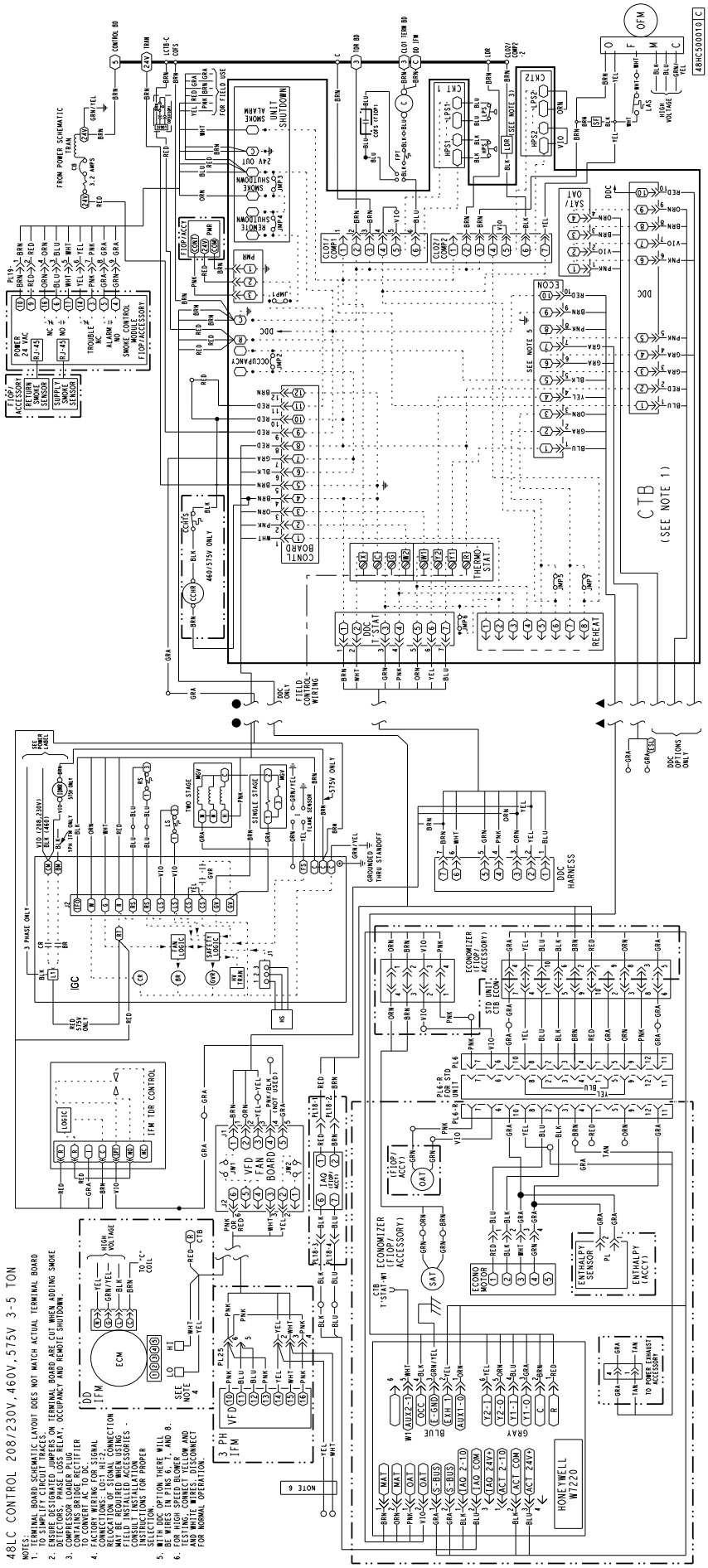

C14045

Fig. 46 - Unit Wiring Diagram - Control

PRE-START-UP

⚠ WARNING

PERSONAL INJURY HAZARD

Failure to follow this warning could result in personal injury or death.

1. Follow recognized safety practices and wear protective goggles when checking or servicing refrigerant system.
2. Do not operate compressor or provide any electric power to unit unless compressor terminal cover is in place and secured.
3. Do not remove compressor terminal cover until all electrical sources are disconnected.
4. Relieve all pressure from system before touching or disturbing anything inside terminal box if refrigerant leak is suspected around compressor terminals.
5. Never attempt to repair soldered connection while refrigerant system is under pressure.
6. Do not use torch to remove any component. System contains oil and refrigerant under pressure. To remove a component, wear protective goggles and proceed as follows:
   a. Shut off electrical power and then gas to unit.
   b. Recover refrigerant to relieve all pressure from system using both high-pressure and low pressure ports.
   c. Cut component connection tubing with tubing cutter and remove component from unit.
   d. Carefully unsweat remaining tubing stubs when necessary. Oil can ignite when exposed to torch flame.

⚠ WARNING

ELECTRICAL OPERATION HAZARD

Failure to follow this warning could result in personal injury or death.

The unit must be electrically grounded in accordance with local codes and NEC ANSI/NFPA 70 (American National Standards Institute/National Fire Protection Association.)

Proceed as follows to inspect and prepare the unit for initial start-up:

1. Remove all access panels.
2. Read and follow instructions on all WARNING, CAUTION, and INFORMATION labels attached to, or shipped with, unit.

⚠ WARNING

PERSONAL INJURY AND ENVIRONMENTAL HAZARD

Failure to follow this warning could result in personal injury or death.

Relieve pressure and recover all refrigerant before system repair or final unit disposal.

Wear safety glasses and gloves when handling refrigerants.

Keep torches and other ignition sources away from refrigerants and oils.

3. Make the following inspections:
   a. Inspect for shipping and handling damages such as broken lines, loose parts, or disconnected wires, etc.
   b. Inspect for oil at all refrigerant tubing connections and on unit base. Detecting oil generally indicates a refrigerant leak. Leak-test all refrigerant tubing connections using electronic leak detector, halide torch, or liquid-soap solution.
   c. Inspect all field-wiring and factory-wiring connections. Be sure that connections are completed and tight. Be sure that wires are not in contact with refrigerant tubing or sharp edges.
   d. Inspect coil fins. If damaged during shipping and handling, carefully straighten fins with a fin comb.
4. Verify the following conditions:
   a. Make sure that condenser-fan blade are correctly positioned in fan orifice. See Condenser-Fan Adjustment section for more details.
   b. Make sure that air filter(s) is in place.
   c. Make sure that condensate drain trap is filled with water to ensure proper drainage.
   d. Make sure that all tools and miscellaneous loose parts have been removed.

START-UP, GENERAL

Unit Preparation

Make sure that unit has been installed in accordance with installation instructions and applicable codes.

Gas Piping

Check gas piping for leaks.

⚠ WARNING

UNIT OPERATION AND SAFETY HAZARD

Failure to follow this warning could result in personal injury or death.

Disconnect gas piping from unit when leak testing at pressure greater than 1/2 psig. Pressures greater than 1/2 psig will cause gas valve damage resulting in hazardous condition. If gas valve is subjected to pressure greater than 1/2 psig, it must be replaced before use. When pressure testing field-supplied gas piping at pressures of 1/2 psig or less, a unit connected to such piping must be isolated by manually closing the gas valve.

Return-Air Filters

Make sure correct filters are installed in unit (see Appendix II - Physical Data). Do not operate unit without return-air filters.

Outdoor-Air Inlet Screens

Outdoor-air inlet screen must be in place before operating unit.

Compressor Mounting

Compressors are internally spring mounted. Do not loosen or remove compressor hold down bolts.

Internal Wiring

Check all factory and field electrical connections for tightness. Tighten as required.

Refrigerant Service Ports

Each unit system has two 1/4" SAE flare (with check valves) service ports: one on the suction line, and one on the compressor discharge line. Be sure that caps on the ports are tight.

Compressor Rotation

On 3-phase units with scroll compressors, it is important to be certain compressor is rotating in the proper direction. To determine whether or not compressor is rotating in the proper direction:

1. Connect service gauges to suction and discharge pressure fittings.
2. Energize the compressor.
3. The suction pressure should drop and the discharge pressure should rise, as is normal on any start-up.

If the suction pressure does not drop and the discharge pressure does not rise to normal levels:

4. Note that the evaporator fan is probably also rotating in the wrong direction.
5. Turn off power to the unit and install lockout tag.
6. Reverse any two of the unit power leads.
7. Re-energize to the compressor. Check pressures.

The suction and discharge pressure levels should now move to their normal start-up levels.

NOTE: When the compressor is rotating in the wrong direction, the unit will make an elevated level of noise and will not provide cooling.

Cooling

Set space thermostat to OFF position. To start unit, turn on main power supply. Set system selector switch at COOL position and fan switch at AUTO. position. Adjust thermostat to a setting approximately 5°F (3°C) below room temperature. Both compressors start on closure of contactors.

Check unit charge. Refer to Refrigerant Charge section.

Reset thermostat at a position above room temperature. Both compressors will shut off. Evaporator fan will shut off immediately.

To shut off unit, set system selector switch at OFF position. Resetting thermostat at a position above room temperature shuts unit off temporarily until space temperature exceeds thermostat setting.

Main Burners

Main burners are factory set and should require no adjustment.

To check ignition of main burners and heating controls, move thermostat setpoint above room temperature and verify that the burners light and evaporator fan is energized. Check heating effect, then lower the thermostat setting below the room temperature and verify that the burners and evaporator fan turn off.

Refer to Table 11 for the correct orifice to use at high altitudes.

Heating

1. Purge gas supply line of air by opening union ahead of the gas valve. If gas odor is detected, tighten union and wait 5 minutes before proceeding
2. Turn on electrical supply and manual gas valve.
3. Set system switch selector at HEAT position and fan switch at AUTO. or ON position. Set heating temperature lever above room temperature.
4. The induced-draft motor will start.
5. After a call for heating, the main burners should light within 5 seconds. If the burner does not light, then there is a 22-second delay before another 5-second try. If the burner still does not light, the time delay is repeated. If the burner does not light within 15 minutes, there is a lockout. To reset the control, break the 24 v power to W1.
6. The evaporator-fan motor will turn on 45 seconds after burner ignition.
7. The evaporator-fan motor will turn off in 45 seconds after the thermostat temperature is satisfied.
8. Adjust airflow to obtain a temperature rise within the range specified on the unit nameplate.

NOTE: The default value for the evaporator-fan motor on/off delay is 45 seconds. The Integrated Gas Unit Controller (IGC) modifies this value when abnormal limit switch cycles occur. Based upon unit operating conditions,

the on delay can be reduced to 0 seconds and the off delay can be extended to 180 seconds.

If the limit switch trips at the start of the heating cycle during the evaporator on delay, the time period of the on delay for the next cycle will be 5 seconds less than the time at which the switch tripped. (Example: If the limit switch trips at 30 seconds, the evaporator-fan on delay for the next cycle will occur at 25 seconds.) To prevent short-cycling, a 5-second reduction will only occur if a minimum of 10 minutes has elapsed since the last call for heating.

The evaporator-fan off delay can also be modified. Once the call for heating has ended, there is a 10-minute period during which the modification can occur. If the limit switch trips during this period, the evaporator-fan off delay will increase by 15 seconds. A maximum of 9 trips can occur, extending the evaporator-fan off delay to 180 seconds.

To restore the original default value, reset the power to the unit.

To shut off unit, set system selector switch at OFF position. Resetting heating selector lever below room temperature will temporarily shut unit off until space temperature falls below thermostat setting.

Ventilation (Continuous Fan)

Set fan and system selector switches at ON and OFF positions, respectively. Evaporator fan operates continuously to provide constant air circulation. When the evaporator-fan selector switch is turned to the OFF position, there is a 30-second delay before the fan turns off.

FASTENER TORQUE VALUES

See Table 15 for torque values.

Table 15 – Torque Values

Supply fan motor mounting	120 +/– 12 in–lbs
Supply fan motor adjustment plate	120 +/– 12 in–lbs
Motor pulley setscrew	72+/– 5 in–lbs
Fan pulley setscrew	72+/– 5 in–lbs
Blower wheel hub setscrew	72+/– 5 in–lbs
Bearing locking collar setscrew	65–70 in–lbs
Compressor mounting bolts	65–75 in–lbs
Condenser fan motor mounting bolts	20 +/– 2 in–lbs
Condenser fan hub setscrew	84 +/– 12 in–lbs

APPENDIX I. MODEL NUMBER SIGNIFICANCE

Model Number Nomenclature

1	2	3	4	5	6	7	8	9	10	11	12	13	14	15	16	17	18
4	8	L	C	D	0	0	6	A	0	A	5	–	0	A	0	A	0

Unit Type
48 = Gas Heat Packaged Rooftop

Model Series–WeatherMaster
LC = Ultra High Efficiency

Heat Size
D = Low gas heat
E = Medium gas heat
F = High gas heat
L = Low NO_x, low gas heat
M = Low NO_x, medium gas heat
N = Low NO_x, high gas heat
S = Low heat with stainless steel exchanger
R = Med heat with stainless steel exchanger
T = High heat with stainless steel exchanger
(Low No_x models include stainless steel HX)

Refrig. System Options
0 = Two stage cooling capacity

Nominal Cooling Tons
04 = 3 Ton
05 = 4 Ton
06 = 5 Ton

Sensor Options
A = None
B = RA smoke detector
C = SA smoke detector
D = RA & SA smoke detector
E = CO_2 sensor
F = RA smoke detector & CO_2
G = SA smoke detector & CO_2
H = RA & SA smoke detector & CO_2

Indoor Fan Options
0 = Standard static (direct) drive X13 motor
2 = Medium static option–belt drive with VFD controller
3 = High static option–belt drive with VFD controller

Coil Options fin/tube (condenser–evaporator–hail guard
A = Al/Cu – Al/Cu
B = Precoat Al/Cu – Al/Cu
C = E coat Al/Cu – Al–Cu
D = E coat Al/Cu–E coat Al/Cu
E = Cu/Cu–Al/Cu
F = Cu/Cu – Cu/Cu
M = Al/Cu – Al/Cu – Louvered Hail Guard
N = Precoat Al/Cu – Al/Cu – Louvered Hail Guard
P = Ecoat Al/Cu – Al/Cu – Louvered Hail Guard
Q = Ecoat Al/Cu – Ecoat Al/Cu – Louvered Hail Guard
R = Cu/Cu–Al/Cu–Louvered Hail Guard
S = Cu/Cu–Al/Cu–Louvered Hail Guard

Voltage
1 = 575/3/60
5 = 208–230/3/60
6 = 460/3/60

Design Rev
– Factory design revision

Base Unit Controls
0 = Electromechanical
1 = RTU Open Multi–Protocol controller
2 = ComfortLINK controls

Air Intake / Exhaust Options
A = None
B = Temp econo w/ baro relief
E = Enthalpy econo w/ baro relief
N = Ultra Low Leak temp econo w/ baro relief
R = Ultra Low Leak Enthalpy econo w/ baro relief

Service Options
0 = None
1 = Unpowered convenience outlet
2 = Powered convenience outlet
3 = Hinged panels
4 = Hinged panels, unpwrd conv outlet
5 = Hinged panels, pwrd conv outlet

Electrical Options
A = None
B = HACR Breaker
C = Non–fused disconnect
D = Thru the base connections
E = HACR Breaker with thru the base connections
F = Non–fused & thru the base connections

Brand / Packaging
0 = Standard
1 = LTL

APPENDIX II. PHYSICAL DATA

PHYSICAL DATA (COOLING) 3 - 6 TONS

	48LC*004	48LC*005	48LC*006
Refrigeration System			
# Stages/ # Comp. / Type	2 / 1 / Scroll	2 / 1 / Scroll	2 / 1 / Scroll
R–410A charge A/B (lbs – oz)	9 – 2	9 – 0	11 – 0
Metering device	TXV	TXV	TXV
High–press. Trip / Reset (psig)	630 / 505	630 / 505	630 / 505
Low–press. Trip / Reset (psig)	27 / 44	27 / 44	27 / 44
Evaporator Coil			
Material	Cu / Al	Cu / Al	Cu / Al
Coil type	3/8–in RTPF	3/8–in RTPF	3/8–in RTPF
Rows / FPI	3 / 15	3 / 15	4 / 15
Total Face Area (ft^2)	5.5	7.3	7.3
Condensate Drain Connection Size	3/4–in	3/4–in	3/4–in
Evaporator fan and motor			
Standard Static			
Motor Qty / Drive type	1 / Direct – ECM	1 / Direct – ECM	1 / Direct – ECM
Max BHP	1	1	1
RPM range	600–1200	600–1200	600–1200
Motor Frame Size	48	48	48
Fan Qty / Type	1 / Centrifugal	1 / Centrifugal	1 / Centrifugal
Fan Diameter (in)	10 x 10	10 x 10	11 x 10
Medium Static			
Motor Qty / Drive type	1 / Belt w/VFD	1 / Belt w/VFD	1 / Belt w/VFD
Max BHP	1.7	1.7	2.4
RPM range	770–1175	920–1303	1035–1466
Motor Frame Size	56	56	56
Fan Qty / Type	1 / Centrifugal	1 / Centrifugal	1 / Centrifugal
Fan Diameter (in)	10 x 10	10 x 10	10 x 10
High Static			
Motor Qty / Drive type	1 / Belt w/VFD	1 / Belt w/VFD	1 / Belt w/VFD
Max BHP	2.4	2.9	2.9
RPM range	1035–1466	1208–1639	1303–1687
Motor Frame Size	56	56	56
Fan Qty / Type	1 / Centrifugal	1 / Centrifugal	1 / Centrifugal
Fan Diameter (in)	10 x 10	10 x 10	10 x 10
Condenser Coil			
Material	Cu / Al	Cu / Al	Cu / Al
Coil type	7mm RTPF	7mm RTPF	7mm RTPF
Rows / FPI	2 / 20	2 / 20	2 / 20
Total Face Area (ft2)	16.4	21.4	21.4
Condenser fan / motor			
Qty / Motor drive type	1 / Direct – ECM	1 / Direct – ECM	1 / Direct – ECM
Motor HP / RPM	1/3 / 1001	1/3 / 1082	1/3 / 1082
Fan diameter (in)	22	22	22
Filters			
RA Filter # / size (in)	2 / 16 x 25 x 2	4 / 16 x 16 x 2	4 / 16 x 16 x 2
OA inlet screen # / size (in)	1 / 20 x 24 x 1	1 / 20 x 24 x 1	1 / 20 x 24 x 1

PHYSICAL DATA (HEATING) 3 - 6 TONS

	48LC**04	48LC**05	48LC**06
Gas Connection			
# of Gas Valves	1	1	1
Nat. gas supply line press (in. w.g.)/(PSIG)	4 –13 / 0.18 – 0.47	4 –13 / 0.18 – 0.47	4 –13 / 0.18 – 0.47
Propane supply line press (in. w.g.)/(PSIG)	11 –13 / 0.40 – 0.47	11 –13 / 0.40 – 0.47	11 –13 / 0.40 – 0.47
Heat Anticipator Setting (Amps)			
1st stage	0.14	0.14	0.14
2nd stage	0.14	0.14	0.14
Natural Gas, Propane Heat			
LOW: # of stages / # of burners (total)	1 or 2 / 2	1 or 2 / 2	1 or 2 / 2
LOW: Connection size	1/2–in NPT	1/2–in NPT	1/2–in NPT
LOW: Rollout switch opens / closes	195 / 115	195 / 115	195 / 115
LOW: Temperature rise range (F)	25 – 55	25 – 55	20 – 55
MED: # of stages / # of burners (total)	1 or 2 / 3	1 or 2 / 3	1 or 2 / 3
MED: Connection size	1/2–in NPT	1/2–in NPT	1/2–in NPT
MED: Rollout switch opens / closes	195 / 115	195 / 115	195 / 115
MED: Temperature rise range (F)	55 – 85	35 – 65	30 – 65
HIGH: # of stages / # of burners (total)	–	1 or 2 / 3	1 or 2 / 3
HIGH: Connection size	–	1/2–in NPT	1/2–in NPT
HIGH: Rollout switch opens / closes	–	195 / 115	195 / 115
HIGH: Temperature rise range (F)	–	50 – 80	40 – 80
Low NO_x Gas Heat			
LOW: # of stages / # of burners (total)	1 / 2	1 / 2	1 / 2
LOW: Connection size	1/2–in NPT	1/2–in NPT	1/2–in NPT
LOW: Rollout switch opens / closes	195 / 115	195 / 115	195 / 115
LOW: Temperature rise range (F)	20 – 50	20 – 50	15 – 50
MED: # of stages / # of burners (total)	1 / 3	1 / 3	1 / 3
MED: Connection size	1/2–in NPT	1/2–in NPT	1/2–in NPT
MED: Rollout switch opens / closes	195 / 115	195 / 115	195 / 115
MED: Temperature rise range (F)	30 – 60	30 – 60	25 – 60
HIGH: # of stages / # of burners (total)	–	1 / 3	1 / 3
HIGH: Connection size	–	1/2–in NPT	1/2–in NPT
HIGH: Rollout switch opens / closes	–	195 / 115	195 / 115
HIGH: Temperature rise range (F)	–	40 – 70	35 – 70

– Not Applicable

APPENDIX III FAN PERFORMANCE

Table 16 – 48LC*004, 3 phase, 3 ton vertical supply

CFM	Available External Static Pressure (in. wg)									
	0.2		0.4		0.6		0.8		1.0	
	RPM	BHP	RPM	BHP	RPM	BHP	RPM	BHP	RPM	BHP
900	**592**	**0.14**	**721**	**0.25**	826	0.38	916	0.53	997	0.69
975	**616**	**0.17**	**744**	**0.28**	847	0.41	936	0.56	1016	0.72
1050	**641**	**0.19**	**766**	**0.30**	868	0.44	957	0.59	1036	0.76
1125	**667**	**0.22**	790	0.33	890	0.47	978	0.63	1056	0.80
1200	**693**	**0.25**	813	0.37	913	0.51	999	0.67	1077	0.84
1275	**720**	**0.29**	837	0.41	935	0.55	1021	0.71	1098	0.88
1350	**747**	**0.33**	862	0.45	958	0.60	1043	0.76	1119	0.94
1425	775	0.37	887	0.50	982	0.65	1066	0.81	1141	0.99
1500	802	0.42	912	0.55	1006	0.70	1088	0.87	1163	1.05

CFM	Available External Static Pressure (in. wg)									
	1.2		1.4		1.6		1.8		2.0	
	RPM	BHP	RPM	BHP	RPM	BHP	RPM	BHP	RPM	BHP
900	1070	0.88	1137	1.07	1201	1.29	1260	1.51	1317	1.75
975	1089	0.91	1156	1.11	1219	1.32	1279	1.54	1335	1.78
1050	1108	0.94	1175	1.14	1238	1.36	1297	1.58	1353	1.82
1125	1128	0.98	1195	1.18	1257	1.40	1316	1.62	1372	1.86
1200	1148	1.03	1214	1.23	1276	1.44	1335	1.67	1391	1.91
1275	1169	1.07	1235	1.28	1296	1.50	1354	1.72	1410	1.97
1350	1190	1.13	1255	1.33	1316	1.55	1374	1.78	1429	2.03
1425	1211	1.19	1276	1.39	1337	1.61	1394	1.85	1449	2.09
1500	1232	1.25	1297	1.46	1357	1.68	1415	1.91	**1469**	**2.16**

NOTE: For more information, see General Fan Performance Notes.
Boldface indicates field–supplied drive is required.

Medium static 770–1175 RPM, 1.2 BHP max

High static 1035–1466 RPM, 2.4 BHP max

Table 17 – 48LC*004, 3 phase, 3 ton horizontal supply

CFM	Available External Static Pressure (in. wg)									
	0.2		0.4		0.6		0.8		1.0	
	RPM	BHP	RPM	BHP	RPM	BHP	RPM	BHP	RPM	BHP
900	**582**	**0.14**	**715**	**0.24**	825	0.35	921	0.48	1007	0.63
975	**606**	**0.16**	**735**	**0.26**	843	0.38	938	0.51	1023	0.66
1050	**630**	**0.18**	**756**	**0.29**	862	0.41	955	0.55	1040	0.70
1125	**655**	**0.21**	778	0.32	882	0.45	974	0.58	1057	0.74
1200	**681**	**0.24**	800	0.35	902	0.48	992	0.63	1074	0.78
1275	**708**	**0.27**	823	0.39	923	0.53	1012	0.67	1093	0.83
1350	**735**	**0.31**	847	0.43	945	0.57	1032	0.72	1112	0.88
1425	**762**	**0.35**	871	0.48	967	0.62	1053	0.77	1131	0.94
1500	790	0.40	896	0.53	990	0.67	1074	0.83	1151	1.00

CFM	Available External Static Pressure (in. wg)									
	1.2		1.4		1.6		1.8		2.0	
	RPM	BHP	RPM	BHP	RPM	BHP	RPM	BHP	RPM	BHP
900	1086	0.79	1159	0.96	1228	1.14	1293	1.33	1354	1.53
975	1101	0.82	1174	0.99	1242	1.18	1306	1.37	1367	1.57
1050	1117	0.86	1189	1.03	1256	1.22	1320	1.41	1381	1.62
1125	1133	0.90	1204	1.08	1271	1.26	1335	1.46	1395	1.67
1200	1150	0.95	1221	1.13	1287	1.31	1350	1.51	1410	1.72
1275	1168	1.00	1237	1.18	1303	1.37	1365	1.57	1425	1.78
1350	1186	1.05	1255	1.24	1320	1.43	1382	1.63	1441	1.84
1425	1204	1.11	1272	1.30	1337	1.49	1398	1.70	1457	1.91
1500	1223	1.18	1291	1.36	1355	1.56	1415	1.77	**1473**	**1.99**

NOTE: For more information, see General Fan Performance Notes.
Boldface indicates field–supplied drive is required.

Medium static 770–1175 RPM, 1.2 BHP max

High static 1035–1466 RPM, 2.4 BHP max

Table 18 – 48LC*005, 3 phase, 4 ton vertical supply

CFM	Available External Static Pressure (in. wg)									
	0.2		0.4		0.6		0.8		1.0	
	RPM	BHP	RPM	BHP	RPM	BHP	RPM	BHP	RPM	BHP
1200	**693**	**0.25**	**813**	**0.37**	**913**	**0.51**	999	0.67	1077	0.84
1300	**729**	**0.30**	**846**	**0.42**	943	0.57	1028	0.73	1105	0.90
1400	**765**	**0.35**	**879**	**0.48**	974	0.63	1058	0.79	1134	0.97
1500	**802**	**0.42**	**912**	**0.55**	1006	0.70	1088	0.87	1163	1.05
1600	**840**	**0.49**	947	0.63	1038	0.78	1119	0.95	1193	1.14
1700	**878**	**0.57**	982	0.71	1071	0.87	1151	1.05	1224	1.24
1800	**917**	**0.65**	1017	0.81	1105	0.97	1183	1.15	1255	1.35
1900	956	0.75	1053	0.91	1139	1.08	1216	1.27	1287	1.47
2000	995	0.86	1090	1.02	1173	1.20	1249	1.39	1319	1.59

CFM	Available External Static Pressure (in. wg)									
	1.2		1.4		1.6		1.8		2.0	
	RPM	BHP	RPM	BHP	RPM	BHP	RPM	BHP	RPM	BHP
1200	1148	1.03	1214	1.23	1276	1.44	1335	1.67	1391	1.91
1300	1176	1.09	1241	1.30	1303	1.51	1361	1.74	1416	1.98
1400	1204	1.17	1269	1.37	1330	1.59	1388	1.82	1442	2.07
1500	1232	1.25	1297	1.46	1357	1.68	1415	1.91	1469	2.16
1600	1262	1.34	1325	1.55	1385	1.78	1442	2.01	1496	2.26
1700	1291	1.44	1354	1.66	1414	1.89	1470	2.12	1524	2.37
1800	1322	1.55	1384	1.77	1443	2.00	1499	2.25	1552	2.50
1900	1352	1.68	1414	1.90	1472	2.13	1528	2.38	1580	2.63
2000	1384	1.81	1445	2.04	1502	2.27	1557	2.52	1609	2.78

NOTE: For more information, see General Fan Performance Notes.
Boldface indicates field–supplied drive is required.
Medium static 920–1303 RPM, 1.7 BHP max
High static 1208–1639 RPM, 2.9 BHP max

Table 19 – 48LC*005, 3 phase, 4 ton horizontal supply

CFM	Available External Static Pressure (in. wg)									
	0.2		0.4		0.6		0.8		1.0	
	RPM	BHP	RPM	BHP	RPM	BHP	RPM	BHP	RPM	BHP
1200	**681**	**0.24**	**800**	**0.35**	**902**	**0.48**	992	0.63	1074	0.78
1300	**717**	**0.29**	**831**	**0.41**	930	0.54	1019	0.69	1099	0.85
1400	**753**	**0.34**	**863**	**0.46**	959	0.60	1046	0.75	1125	0.92
1500	**790**	**0.40**	**896**	**0.53**	990	0.67	1074	0.83	1151	1.00
1600	**828**	**0.46**	930	0.60	1021	0.75	1103	0.91	1179	1.09
1700	**866**	**0.54**	964	0.68	1053	0.84	1133	1.01	1207	1.18
1800	**905**	**0.62**	1000	0.77	1085	0.94	1164	1.11	1236	1.29
1900	944	0.71	1036	0.87	1119	1.04	1195	1.22	1266	1.41
2000	984	0.82	1072	0.98	1153	1.15	1227	1.34	1297	1.53

CFM	Available External Static Pressure (in. wg)									
	1.2		1.4		1.6		1.8		2.0	
	RPM	BHP	RPM	BHP	RPM	BHP	RPM	BHP	RPM	BHP
1200	1150	0.95	1221	1.13	1287	1.31	1350	1.51	1410	1.72
1300	1173	1.02	1243	1.20	1309	1.39	1371	1.59	1430	1.80
1400	1198	1.09	1266	1.28	1331	1.47	1393	1.68	1451	1.89
1500	1223	1.18	1291	1.36	1355	1.56	1415	1.77	1473	1.99
1600	1249	1.27	1316	1.46	1379	1.66	1439	1.87	1496	2.09
1700	1277	1.37	1342	1.57	1404	1.77	1463	1.99	1520	2.21
1800	1305	1.48	1369	1.68	1430	1.89	1489	2.11	1545	2.34
1900	1333	1.60	1397	1.81	1457	2.02	1514	2.25	1570	2.48
2000	1363	1.73	1425	1.94	1484	2.16	1541	2.39	1596	2.63

NOTE: For more information, see General Fan Performance Notes.
Boldface indicates field–supplied drive is required.
Medium static 920–1303 RPM, 1.7 BHP max
High static 1208–1639 RPM, 2.9 BHP max

APPENDIX III FAN PERFORMANCE cont.

Table 20 – 48LC*006, 3 phase, 5 ton vertical supply

CFM	Available External Static Pressure (in. wg)									
	0.2		0.4		0.6		0.8		1.0	
	RPM	BHP	RPM	BHP	RPM	BHP	RPM	BHP	RPM	BHP
1500	**847**	**0.41**	966	0.55	1067	0.68	1158	0.81	1240	0.93
1625	**896**	**0.50**	1010	0.65	1109	0.79	1198	0.93	1278	1.07
1750	**947**	**0.59**	1056	0.76	1152	0.92	1238	1.07	1318	1.22
1875	**998**	**0.70**	1103	0.88	1196	1.05	1280	1.22	1358	1.38
2000	1049	0.82	1151	1.02	1241	1.20	1323	1.38	1399	1.56
2125	1102	0.96	1199	1.17	1287	1.37	1367	1.56	1441	1.75
2250	1154	1.11	1248	1.33	1333	1.55	1411	1.75	1484	1.96
2375	1208	1.28	1298	1.52	1381	1.74	1457	1.96	1528	2.18
2500	1261	1.47	1349	1.72	1429	1.96	1503	2.19	1572	2.42

CFM	Available External Static Pressure (in. wg)									
	1.2		1.4		1.6		1.8		2.0	
	RPM	BHP	RPM	BHP	RPM	BHP	RPM	BHP	RPM	BHP
1500	1316	1.05	1387	1.17	1454	1.28	1517	1.39	1578	1.50
1625	1353	1.20	1423	1.33	1489	1.46	1552	1.58	1611	1.70
1750	1391	1.36	1460	1.51	1525	1.65	1587	1.78	1646	1.91
1875	1430	1.54	1498	1.70	1562	1.85	1623	2.00	1681	2.14
2000	1470	1.73	1537	1.90	1600	2.06	1660	2.23	**1718**	**2.38**
2125	1511	1.93	1576	2.12	1639	2.29	**1698**	**2.47**	**1755**	**2.64**
2250	1552	2.15	1617	2.35	1678	2.54	**1737**	**2.73**	1793	2.92
2375	1595	2.39	1658	2.60	**1718**	**2.80**	1776	3.01	–	–
2500	1638	2.64	**1700**	**2.87**	1760	3.08	–	–	–	–

NOTE: For more information, see General Fan Performance Notes.
Boldface indicates field–supplied drive is required.

Medium static 1035–1466 RPM, 2.4 BHP max

High static 1303 – 1687 RPM, 2.9 BHP max

Table 21 – 48LC*006, 3 phase, 5 ton horizontal supply

CFM	Available External Static Pressure (in. wg)									
	0.2		0.4		0.6		0.8		1.0	
	RPM	BHP	RPM	BHP	RPM	BHP	RPM	BHP	RPM	BHP
1500	**798**	**0.41**	906	0.55	1002	0.71	1088	0.87	1167	1.05
1625	**845**	**0.50**	949	0.65	1041	0.81	1125	0.98	1202	1.17
1750	**893**	**0.60**	993	0.76	1081	0.93	1163	1.11	1238	1.30
1875	**942**	**0.71**	1037	0.88	1123	1.06	1202	1.25	1275	1.44
2000	**992**	**0.84**	1083	1.02	1166	1.21	1242	1.40	1313	1.61
2125	1043	0.98	1129	1.17	1209	1.37	1283	1.57	1353	1.79
2250	1093	1.14	1177	1.34	1254	1.55	1325	1.76	1393	1.98
2375	1145	1.32	1225	1.53	1299	1.74	1369	1.97	1434	2.20
2500	1196	1.51	1273	1.73	1345	1.96	1413	2.19	1477	2.43

CFM	Available External Static Pressure (in. wg)									
	1.2		1.4		1.6		1.8		2.0	
	RPM	BHP	RPM	BHP	RPM	BHP	RPM	BHP	RPM	BHP
1500	1241	1.23	1310	1.42	1375	1.63	1438	1.84	1497	2.06
1625	1274	1.36	1342	1.56	1406	1.77	1467	1.98	1526	2.21
1750	1308	1.50	1375	1.70	1438	1.92	1498	2.14	1555	2.37
1875	1344	1.65	1409	1.86	1471	2.09	1530	2.32	1586	2.55
2000	1380	1.82	1444	2.04	1505	2.27	1563	2.51	1619	2.75
2125	1418	2.01	1481	2.24	1540	2.47	1597	2.72	**1652**	**2.97**
2250	1457	2.21	1518	2.45	1576	2.69	**1632**	**2.94**	**1686**	**3.20**
2375	1497	2.43	1556	2.68	**1614**	**2.93**	**1669**	**3.19**	–	–
2500	1538	2.68	**1596**	**2.93**	**1652**	**3.19**	–	–	–	–

NOTE: For more information, see General Fan Performance Notes.
Boldface indicates field–supplied drive is required.

Medium static 1035–1466 RPM, 2.4 BHP max

High static 1303–1687 RPM, 2.9 BHP max

Copyright 2014 Carrier Corp. ● 7310 W. Morris St. ● Indianapolis, IN 46231

Edition Date: 01/14

Catalog No: 48LC−04−06−01SM

Manufacturer reserves the right to change, at any time, specifications and designs without notice and without obligations.

Replaces: New

UNIT START-UP CHECKLIST

I. PRELIMINARY INFORMATION

MODEL NO.: _____ SERIAL NO.: _____

DATE: _____ TECHNICIAN: _____

II. PRE-START-UP (insert checkmark in box as each item is completed)

- ☐ VERIFY THAT JOBSITE VOLTAGE AGREES WITH VOLTAGE LISTED ON RATING PLATE
- ☐ VERIFY THAT ALL PACKAGING MATERIALS HAVE BEEN REMOVED FROM UNIT
- ☐ REMOVE ALL SHIPPING HOLD DOWN BOLTS AND BRACKETS PER INSTALLATION INSTRUCTIONS
- ☐ VERIFY THAT CONDENSATE CONNECTION IS INSTALLED PER INSTALLATION INSTRUCTIONS
- ☐ VERIFY THAT FLUE HOOD IS INSTALLED
- ☐ CHECK REFRIGERANT PIPING FOR INDICATIONS OF LEAKS; INVESTIGATE AND REPAIR IF NECESSARY
- ☐ CHECK GAS PIPING FOR LEAKS
- ☐ CHECK ALL ELECTRICAL CONNECTIONS AND TERMINALS FOR TIGHTNESS
- ☐ CHECK THAT RETURN (INDOOR) AIR FILTERS ARE CLEAN AND IN PLACE
- ☐ VERIFY THAT UNIT INSTALLATION IS LEVEL
- ☐ CHECK FAN WHEELS AND PROPELLER FOR LOCATION IN HOUSING/ORIFICE AND SETSCREW TIGHTNESS
- ☐ CHECK TO ENSURE THAT ELECTRICAL WIRING IS NOT IN CONTACT WITH REFRIGERANT LINES OR SHARP METAL EDGES
- ☐ CHECK PULLEY ALIGNMENT AND BELT TENSION PER INSTALLATION INSTRUCTIONS

III. START-UP (REFER TO UNIT SERVICE/MAINTENANCE MANUAL FOR START-UP INSTRUCTIONS)

ELECTRICAL

SUPPLY VOLTAGE	L1-L2	_____	L2-L3	_____	L3-L1	_____
CIRCUIT 1 COMPRESSOR AMPS	L1	_____	L2	_____	L3	_____
CIRCUIT 2 COMPRESSOR AMPS	L1	_____	L2	_____	L3	_____
INDOOR-FAN AMPS		_____		_____		_____
OUTDOOR-FAN AMPS	NO. 1	_____	NO. 2	_____		_____

TEMPERATURES

OUTDOOR-AIR TEMPERATURE	_____ DB	_____ WB
RETURN-AIR TEMPERATURE	_____ DB	_____ WB
COOLING SUPPLY AIR	_____ DB	_____ WB
GAS HEAT SUPPLY AIR	_____ DB	

PRESSURES (Cooling Mode)

GAS INLET PRESSURE	_____ IN. WG	
GAS MANIFOLD PRESSURE	_____ IN. WG (LOW FIRE)	IN. WG (HI FIRE)
REFRIGERANT SUCTION, CIRCUIT 1	_____ PSIG	_____ F
REFRIGERANT SUCTION, CIRCUIT 2	_____ PSIG	_____ F
REFRIGERANT DISCHARGE, CIRCUIT 1	_____ PSIG	_____ F
REFRIGERANT DISCHARGE, CIRCUIT 2	_____ PSIG	_____ F

- ☐ VERIFY THAT 3-PHASE FAN MOTOR AND BLOWER ARE ROTATING IN CORRECT DIRECTION.

☐ VERIFY THAT 3-PHASE SCROLL COMPRESSOR IS ROTATING IN THE CORRECT DIRECTION

☐ VERIFY REFRIGERANT CHARGE USING CHARGING CHARTS

GENERAL

☐ SET ECONOMIZER MINIMUM VENT AND CHANGEOVER SETTINGS TO MATCH JOB REQUIREMENTS (IF EQUIPPED)

Copyright 2014 Carrier Corp. • 7310 W. Morris St. • Indianapolis, IN 46231

Edition Date: 01/14

Catalog No: 48LC−04−06−01SM

Manufacturer reserves the right to change, at any time, specifications and designs without notice and without obligations.

Replaces: New