48TCA04–A07
Nominal 3 to 6 Tons
With Puron® (R410A) Refrigerant

Carrier®
Turn to the Experts.℠

Service and Maintenance Instructions

TABLE OF CONTENTS

SAFETY CONSIDERATIONS 1
UNIT ARRANGEMENT AND ACCESS 2
SUPPLY FAN (BLOWER) SECTION 4
COOLING 5
PURON® (R-410A) REFRIGERANT 8
COOLING CHARGING CHARTS 9
CONVENIENCE OUTLETS 13
SMOKE DETECTORS 13
DETECTOR CLEANING 18
INDICATORS 19
TROUBLESHOOTING 20
PROTECTIVE DEVICES 20
GAS HEATING SYSTEM 21
PREMIERLINK™ CONTROL 30
ECONOMIZER SYSTEMS 39
START-UP 48
FASTENER TORQUE VALUES 57
WIRING DIAGRAMS 58
APPENDIX I. MODEL NUMBER SIGNIFICANCE . 60
APPENDIX II. PHYSICAL DATA 61
APPENDIX III. FAN PERFORMANCE 63
APPENDIX IV. ELECTRICAL DATA 72
APPENDIX V. WIRING DIAGRAM LIST 76
APPENDIX VI. MOTORMASTER SENSOR LOCATIONS 77
UNIT START-UP CHECKLIST 79

SAFETY CONSIDERATIONS

Installation and servicing of air-conditioning equipment can be hazardous due to system pressure and electrical components. Only trained and qualified service personnel should install, repair, or service air-conditioning equipment. Untrained personnel can perform the basic maintenance functions of replacing filters. Trained service personnel should perform all other operations.

When working on air-conditioning equipment, observe precautions in the literature, tags and labels attached to the unit, and other safety precautions that may apply. Follow all safety codes. Wear safety glasses and work gloves. Use quenching cloth for unbrazing operations. Have fire extinguishers available for all brazing operations.

Follow all safety codes. Wear safety glasses and work gloves. Use quenching cloth for brazing operations. Have fire extinguisher available. Read these instructions thoroughly and follow all warnings or cautions attached to the unit. Consult local building codes and National Electrical Code (NEC) for special requirements.

Recognize safety information. This is the safety-alert symbol ⚠. When you see this symbol on the unit and in instructions or manuals, be alert to the potential for personal injury.

Understand the signal words DANGER, WARNING, and CAUTION. These words are used with the safety-alert symbol. DANGER identifies the most serious hazards which **will** result in severe personal injury or death. WARNING signifies a hazard which **could** result in personal injury or death. CAUTION is used to identify unsafe practices which **may** result in minor personal injury or product and property damage. NOTE is used to highlight suggestions which **will** result in enhanced installation, reliability, or operation.

⚠ WARNING

FIRE, EXPLOSION HAZARD

Failure to follow this warning could result in personal injury, death and/or property damage.

Refer to the User's Information Manual provided with this unit for more details.

Do not store or use gasoline or other flammable vapors and liquids in the vicinity of this or any other appliance.

What to do if you smell gas:

DO NOT try to light any appliance.
DO NOT touch any electrical switch, or use any phone in your building.
IMMEDIATELY call your gas supplier from a neighbor's phone. Follow the gas supplier's instructions.
If you cannot reach your gas supplier, call the fire department.

⚠ WARNING

ELECTRICAL OPERATION HAZARD

Failure to follow this warning could result in personal injury or death.

Before performing service or maintenance operations on unit, turn off main power switch to unit. Electrical shock and rotating equipment could cause injury.

⚠ WARNING

ELECTRICAL OPERATION HAZARD

Failure to follow this warning could result in personal injury or death.

Units with convenience outlet circuits may use multiple disconnects. Check convenience outlet for power status before opening unit for service. Locate its disconnect switch, if appropriate, and open it. Tag-out this switch, if necessary.

⚠ WARNING

UNIT OPERATION AND SAFETY HAZARD

Failure to follow this warning could cause personal injury, death and/or equipment damage.

Puron (R-410A) refrigerant systems operate at higher pressures than standard R-22 systems. Do not use R-22 service equipment or components on Puron refrigerant equipment.

⚠ WARNING

FIRE, EXPLOSION HAZARD

Failure to follow this warning could result in personal injury or death.

Disconnect gas piping from unit when pressure testing at pressure greater than 0.5 psig. Pressures greater than 0.5 psig will cause gas valve damage resulting in hazardous condition. If gas valve is subjected to pressure greater than 0.5 psig, it *must* be replaced before use. When pressure testing field-supplied gas piping at pressures of 0.5 psig or less, a unit connected to such piping must be isolated by closing the manual gas valve(s).

UNIT ARRANGEMENT AND ACCESS

General

Fig. 1 and 2 show general unit arrangement and access locations.

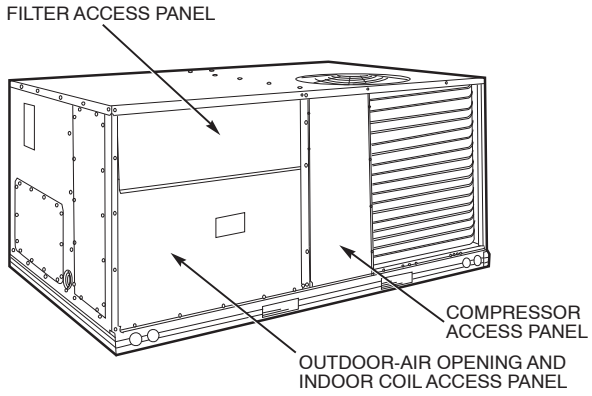

C06023

Fig. 1 - Typical Access Panel Locations

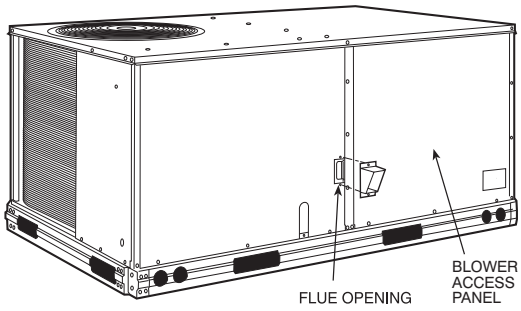

C07081

Fig. 2 - Blower Access Panel Location

Routine Maintenance

These items should be part of a routine maintenance program, to be checked every month or two, until a specific schedule for each can be identified for this installation:

Quarterly Inspection (and 30 days after initial start)

- Return air filter replacement
- Outdoor hood inlet filters cleaned
- Belt tension checked
- Belt condition checked
- Pulley alignment checked
- Fan shaft bearing locking collar tightness checked
- Condenser coil cleanliness checked
- Condensate drain checked

Seasonal Maintenance

These items should be checked at the beginning of each season (or more often if local conditions and usage patterns dictate):

Air Conditioning

- Condenser fan motor mounting bolts tightness
- Compressor mounting bolts
- Condenser fan blade positioning
- Control box cleanliness and wiring condition
- Wire terminal tightness
- Refrigerant charge level
- Evaporator coil cleaning
- Evaporator blower motor amperage

Heating

- Heat exchanger flue passageways cleanliness
- Gas burner condition
- Gas manifold pressure
- Heating temperature rise

Economizer or Outside Air Damper

- Inlet filters condition
- Check damper travel (economizer)
- Check gear and dampers for debris and dirt

Air Filters and Screens

Each unit is equipped with return air filters. If the unit has an economizer, it will also have an outside air screen. If a manual outside air damper is added, an inlet air screen will also be present.

Each of these filters and screens will need to be periodically replaced or cleaned.

Return Air Filters

Return air filters are disposable fiberglass media type. Access to the filters is through the small lift-out panel located on the rear side of the unit, above the evaporator/return air access panel. (See Fig. 1.)

To remove the filters:

1. Grasp the bottom flange of the upper panel.
2. Lift up and swing the bottom out until the panel disengages and pulls out.
3. Reach inside and extract the filters from the filter rack.
4. Replace these filters as required with similar replacement filters of same size.

To re-install the access panel:

1. Slide the top of the panel up under the unit top panel.
2. Slide the bottom into the side channels.
3. Push the bottom flange down until it contacts the top of the lower panel (or economizer top).

IMPORTANT: DO NOT OPERATE THE UNIT WITHOUT THESE FILTERS!

Outside Air Hood

Outside air hood inlet screens are permanent aluminum-mesh type filters. Check these for cleanliness. Remove the screens when cleaning is required. Clean by washing with hot low-pressure water and soft detergent and replace all screens before restarting the unit. Observe the flow direction arrows on the side of each filter frame.

Economizer Inlet Air Screen

This air screen is retained by spring clips under the top edge of the hood. (See Fig. 3.)

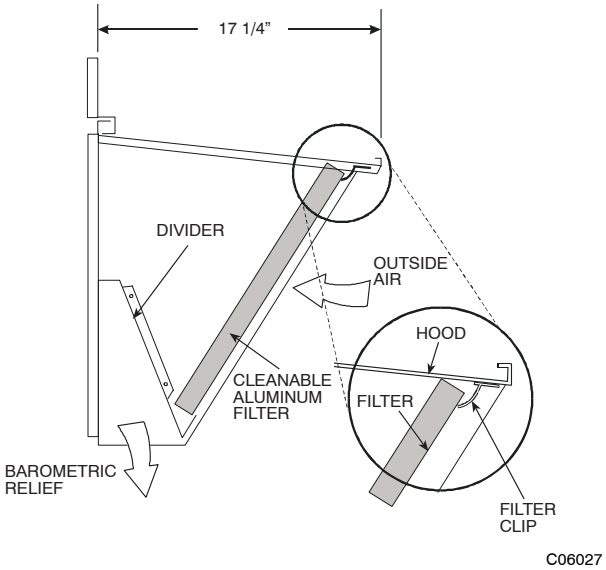

Fig. 3 - Filter Installation

To remove the filter, open the spring clips. Re-install the filter by placing the frame in its track, then closing the spring clips.

Manual Outside Air Hood Screen

This inlet screen is secured by a retainer angle across the top edge of the hood. (See Fig. 4.)

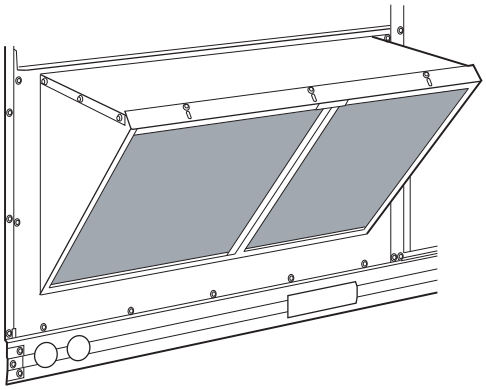

C07156

Fig. 4 - Screens Installed on Outdoor-Air Hood (Sizes 7-1/2 to 12-1/2 Tons Shown)

To remove the screen, loosen the screws in the top retainer and slip the retainer up until the filter can be removed. Re-install by placing the frame in its track, rotating the retainer back down and tighten all screws.

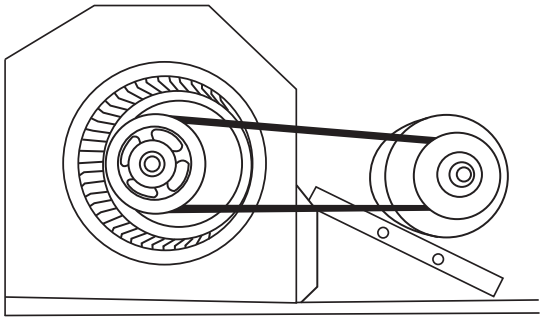

C07087

Fig. 5 - Belt Drive Motor Mounting

SUPPLY FAN (BLOWER) SECTION

⚠ WARNING

ELECTRICAL SHOCK HAZARD

Failure to follow this warning could cause personal injury or death.

Before performing service or maintenance operations on the fan system, shut off all unit power and tag-out the unit disconnect switch. Do not reach into the fan section with power still applied to unit.

Supply Fan (Belt-Drive)

The supply fan system consists of a forward-curved centrifugal blower wheel on a solid shaft with two concentric type bearings, one on each side of the blower housing. A fixed-pitch driven pulley is attached to the fan shaft and an adjustable-pitch driver pulley is on the motor. The pulleys are connected using a "V" type belt. (See Fig. 5.)

Belt

Check the belt condition and tension quarterly. Inspect the belt for signs of cracking, fraying or glazing along the inside surfaces. Check belt tension by using a spring-force tool (such as Browning's Part Number "Belt Tension Checker" or equivalent tool); tension should be 6-lbs at a 5/8-in. deflection when measured at the centerline of the belt span. This point is at the center of the belt when measuring the distance between the motor shaft and the blower shaft.

NOTE: Without the spring-tension tool, place a straight edge across the belt surface at the pulleys, then deflect the belt at mid-span using one finger to a 1/2-in. deflection.

Adjust belt tension by loosening the motor mounting plate front bolts and rear bolt and sliding the plate toward the fan (to reduce tension) or away from fan (to increase tension). Ensure the blower shaft and the motor shaft are parallel to each other (pulleys aligned). Tighten all bolts when finished.

To replace the belt:

1. Use a belt with same section type or similar size. Do not substitute a "FHP" type belt. When installing the new belt, do not use a tool (screwdriver or pry-bar) to force the belt over the pulley flanges, this will stress the belt and cause a reduction in belt life.
2. Loosen the motor mounting plate front bolts and rear bolts.
3. Push the motor and its mounting plate towards the blower housing as close as possible to reduce the center distance between fan shaft and motor shaft.
4. Remove the belt by gently lifting the old belt over one of the pulleys.
5. Install the new belt by gently sliding the belt over both pulleys and then sliding the motor and plate away from the fan housing until proper tension is achieved.
6. Check the alignment of the pulleys, adjust if necessary.
7. Tighten all bolts.
8. Check the tension after a few hours of runtime and re-adjust as required.

Adjustable-Pitch Pulley on Motor

The motor pulley is an adjustable-pitch type that allows a servicer to implement changes in the fan wheel speed to match as-installed ductwork systems. The pulley consists of a fixed flange side that faces the motor (secured to the motor shaft) and a movable flange side that can be rotated around the fixed flange side that increases or reduces the pitch diameter of this driver pulley. (See Fig. 6.)

As the pitch diameter is changed by adjusting the position of the movable flange, the centerline on this pulley shifts laterally (along the motor shaft). This creates a requirement for a realignment of the pulleys after any adjustment of the movable flange. Also reset the belt tension after each realignment.

Check the condition of the motor pulley for signs of wear. Glazing of the belt contact surfaces and erosion on these surfaces are signs of improper belt tension and/or belt slippage. Pulley replacement may be necessary.

To change fan speed:

1. Shut off unit power supply.
2. Loosen belt by loosening fan motor mounting nuts. (See Fig. 5.)
3. Loosen movable pulley flange setscrew. (See Fig. 6.)
4. Screw movable flange toward fixed flange to increase speed and away from fixed flange to decrease speed. Increasing fan speed increases load on motor. Do not exceed maximum speed specified.
5. Set movable flange at nearest keyway of pulley hub and tighten setscrew to torque specifications.

To align fan and motor pulleys:

1. Loosen fan pulley setscrews.
2. Slide fan pulley along fan shaft. Make angular alignment by loosening motor from mounting.
3. Tighten fan pulley setscrews and motor mounting bolts to torque specifications.
4. Recheck belt tension.

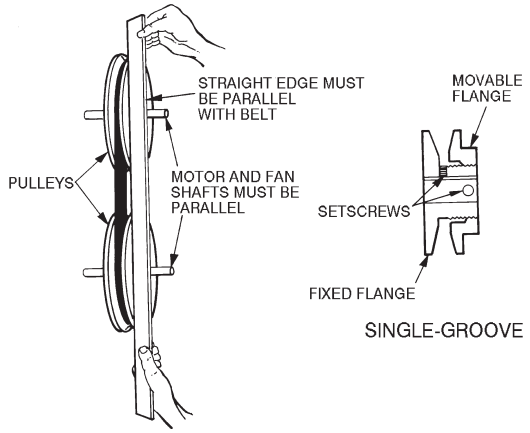

C07075

Fig. 6 - Supply-Fan Pulley Adjustment

Bearings

This fan system uses bearings featuring concentric split locking collars. The collars are tightened through a cap screw bridging the split portion of the collar. The cap screw has a Torx T25 socket head. To tighten the locking collar: Hold the locking collar tightly against the inner race of the bearing and torque the cap screw to 65-70 in-lb (7.4-7.9 Nm). See Fig. 7.

C08121

Fig. 7 - Tightening Locking Collar

Motor

When replacing the motor, also replace the external-tooth lock washer (star washer) under the motor mounting base; this is part of the motor grounding system. Ensure the teeth on the lock washer are in contact with the motor's painted base. Tighten motor mounting bolts to 120 +/- 12 in-lbs.

Changing fan wheel speed by changing pulleys: The horsepower rating of the belt is primarily dictated by the pitch diameter of the smaller pulley in the drive system (typically the motor pulley in these units). Do not install a replacement motor pulley with a smaller pitch diameter than provided on the original factory pulley. Change fan wheel speed by changing the fan pulley (larger pitch diameter to reduce wheel speed, smaller pitch diameter to increase wheel speed) or select a new system (both pulleys and matching belt(s)).

Before changing pulleys to increase fan wheel speed, check the fan performance at the target speed and airflow rate to determine new motor loading (bhp). Use the fan performance tables or use the Packaged Rooftop Builder software program. Confirm that the motor in this unit is capable of operating at the new operating condition. Fan shaft loading increases dramatically as wheel speed is increased.

To reduce vibration, replace the motor's adjustable pitch pulley with a fixed pitch pulley (after the final airflow balance adjustment). This will reduce the amount of vibration generated by the motor/belt-drive system.

COOLING

⚠ WARNING

UNIT OPERATION AND SAFETY HAZARD

Failure to follow this warning could cause personal injury, death and/or equipment damage.

This system uses Puron® refrigerant which has higher pressures than R-22 and other refrigerants. No other refrigerant may be used in this system. Gauge set, hoses, and recovery system must be designed to handle Puron refrigerant. If unsure about equipment, consult the equipment manufacturer.

Condenser Coil

The condenser coil is fabricated with round tube copper hairpins and plate fins of various materials and/or coatings (see Model Number Format in the Appendix to identify the materials provided in this unit). The coil may be one-row or composite-type two-row. Composite two-row coils are two single-row coils fabricated with a single return bend end tubesheet.

Condenser Coil Maintenance and Cleaning Recommendation

Routine cleaning of coil surfaces is essential to maintain proper operation of the unit. Elimination of contamination and removal of harmful residues will greatly increase the

life of the coil and extend the life of the unit. The following maintenance and cleaning procedures are recommended as part of the routine maintenance activities to extend the life of the coil.

Remove Surface Loaded Fibers

Surface loaded fibers or dirt should be removed with a vacuum cleaner. If a vacuum cleaner is not available, a soft non-metallic bristle brush may be used. In either case, the tool should be applied in the direction of the fins. Coil surfaces can be easily damaged (fin edges can be easily bent over and damage to the coating of a protected coil) if the tool is applied across the fins.

NOTE: Use of a water stream, such as a garden hose, against a surface loaded coil will drive the fibers and dirt into the coil. This will make cleaning efforts more difficult. Surface loaded fibers must be completely removed prior to using low velocity clean water rinse.

Periodic Clean Water Rinse

A periodic clean water rinse is very beneficial for coils that are applied in coastal or industrial environments. However, it is very important that the water rinse is made with a very low velocity water stream to avoid damaging the fin edges. Monthly cleaning as described below is recommended.

Routine Cleaning of Coil Surfaces

Periodic cleaning with Totaline® environmentally sound coil cleaner is essential to extend the life of coils. This cleaner is available from Carrier Replacement Components Division as part number P902-0301 for a one gallon container, and part number P902-0305 for a 5 gallon container. It is recommended that all coils, including standard aluminum, pre-coated, copper/copper or E-coated coils be cleaned with the Totaline environmentally sound coil cleaner as described below. Coil cleaning should be part of the unit's regularly scheduled maintenance procedures to ensure long life of the coil. Failure to clean the coils may result in reduced durability in the environment.

Avoid use of:

- coil brighteners
- acid cleaning prior to painting
- high pressure washers
- poor quality water for cleaning

Totaline environmentally sound coil cleaner is nonflammable, hypo allergenic, non bacterial, and a USDA accepted biodegradable agent that will not harm the coil or surrounding components such as electrical wiring, painted metal surfaces, or insulation. Use of non-recommended coil cleaners is strongly discouraged since coil and unit durability could be affected.

One-Row Coil

Wash coil with commercial coil cleaner. It is not necessary to remove top panel.

Two-Row Coils

Clean coil as follows:

1. Turn off unit power, tag disconnect.
2. Remove top panel screws on condenser end of unit.
3. Remove condenser coil corner post. See Fig. 8. To hold top panel open, place coil corner post between top panel and center post. See Fig. 9.

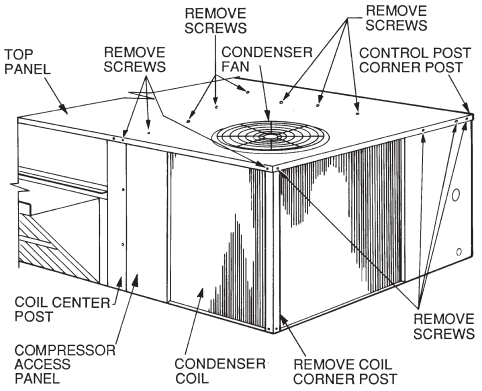

Fig. 8 - Cleaning Condenser Coil

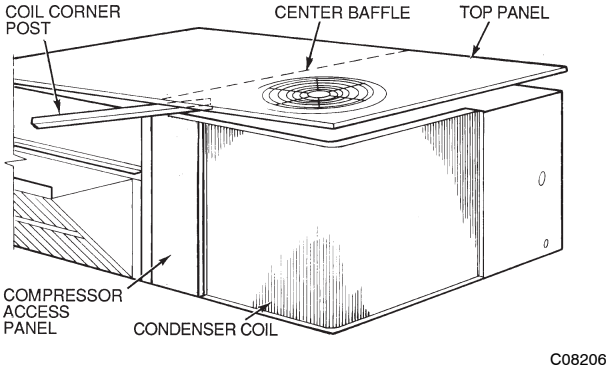

Fig. 9 - Propping Up Top Panel

4. Remove screws securing coil to compressor plate and compressor access panel.
5. Remove fastener holding coil sections together at return end of condenser coil. Carefully separate the outer coil section 3 to 4 in. from the inner coil section. See Fig. 10.

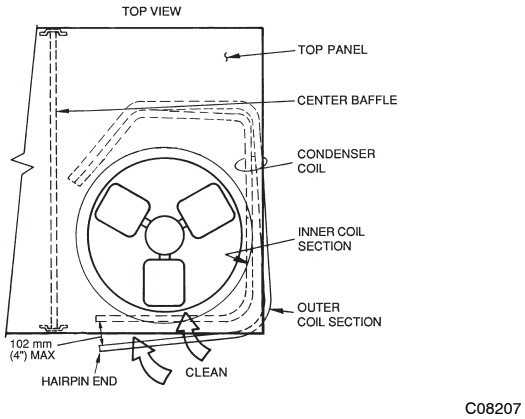

Fig. 10 - Separating Coil Sections

6. Use a water hose or other suitable equipment to flush down between the 2 coil sections to remove dirt and debris. Clean the outer surfaces with a stiff brush in the normal manner.
7. Secure inner and outer coil rows together with a field-supplied fastener.
8. Reposition the outer coil section and remove the coil corner post from between the top panel and center post. Reinstall the coil corner post and replace all screws.

Totaline Environmentally Sound Coil Cleaner Application Equipment

- 2-1/2 gallon garden sprayer
- Water rinse with low velocity spray nozzle

⚠ CAUTION

UNIT DAMAGE HAZARD

Failure to follow this caution may result in accelerated corrosion of unit parts.

Harsh chemicals, household bleach or acid or basic cleaners should not be used to clean outdoor or indoor coils of any kind. These cleaners can be very difficult to rinse out of the coil and can accelerate corrosion at the fin/tube interface where dissimilar materials are in contact. If there is dirt below the surface of the coil, use the Totaline environmentally sound coil cleaner.

⚠ CAUTION

UNIT DAMAGE HAZARD

Failure to follow this caution may result in reduced unit performance or unit shutdown.

High velocity water from a pressure washer, garden hose, or compressed air should never be used to clean a coil. The force of the water or air jet will bend the fin edges and increase airside pressure drop.

Totaline Environmentally Sound Coil Cleaner Application Instructions

1. Proper eye protection such as safety glasses is recommended during mixing and application.
2. Remove all surface loaded fibers and dirt with a vacuum
   cleaner as described above.
3. Thoroughly wet finned surfaces with clean water and a low velocity garden hose, being careful not to bend fins.
4. Mix Totaline environmentally sound coil cleaner in a 2-1/2 gallon garden sprayer according to the instructions included with the cleaner. The optimum solution temperature is 100°F.

NOTE: Do NOT USE water in excess of 130°F, as the enzymatic activity will be destroyed.

5. Thoroughly apply Totaline environmentally sound coil cleaner solution to all coil surfaces including finned area, tube sheets and coil headers.
6. Hold garden sprayer nozzle close to finned areas and apply cleaner with a vertical, up-and-down motion. Avoid spraying in horizontal pattern to minimize potential for fin damage.
7. Ensure cleaner thoroughly penetrates deep into finned areas.
8. Interior and exterior finned areas must be thoroughly cleaned.
9. Finned surfaces should remain wet with cleaning solution for 10 minutes.
10. Ensure surfaces are not allowed to dry before rinsing. Reapplying cleaner as needed to ensure 10-minute saturation is achieved.
11. Thoroughly rinse all surfaces with low velocity clean water using downward rinsing motion of water spray nozzle. Protect fins from damage from the spray nozzle.

Evaporator Coil

Cleaning the Evaporator Coil

1. Turn unit power off. Install lockout tag. Remove evaporator coil access panel.
2. If economizer or two-position damper is installed, remove economizer by disconnecting Molex plug and removing mounting screws.
3. Slide filters out of unit.
4. Clean coil using a commercial coil cleaner or dishwasher detergent in a pressurized spray canister. Wash both sides of coil and flush with clean water. For best results, back-flush toward return-air section to remove foreign material. Flush condensate pan after completion.
5. Reinstall economizer and filters.
6. Reconnect wiring.
7. Replace access panels.

Evaporator Coil Metering Devices

The metering devices are multiple fixed-bore devices (Acutrol™) wedged into the horizontal outlet tubes from the liquid header, located at the entrance to each evaporator coil circuit path. These are non-adjustable. Service requires replacing the entire liquid header assembly.

To check for possible blockage of one or more of these metering devices, disconnect the supply fan contactor (IFC) coil, then start the compressor and observe the frosting pattern on the face of the evaporator coil. A frost pattern should develop uniformly across the face of the coil starting at each horizontal header tube. Failure to develop frost at an outlet tube can indicate a plugged or a missing orifice.

Refrigerant System Pressure Access Ports

There are two access ports in the system - on the suction tube near the compressor and on the discharge tube near the compressor. These are brass fittings with black plastic caps. The hose connection fittings are standard 1/4 SAE Male Flare couplings.

The brass fittings are two-piece High Flow valves, with a receptacle base brazed to the tubing and an integral spring-closed check valve core screwed into the base. (See Fig. 11.) This check valve is permanently assembled into this core body and cannot be serviced separately; replace the entire core body if necessary. Service tools are available from RCD that allow the replacement of the check valve core without having to recover the entire system refrigerant charge. Apply compressor refrigerant oil to the check valve core's bottom o-ring. Install the fitting body with 96 +/ -10 in-lbs of torque; do not overtighten.

PURON® (R-410A) REFRIGERANT

This unit is designed for use with Puron (R-410A) refrigerant. Do not use any other refrigerant in this system.

Puron (R-410A) is provided in pink (rose) colored cylinders. These cylinders are available with and without dip tubes; cylinders with dip tubes will have a label indicating this feature. For a cylinder with a dip tube, place the cylinder in the upright position (access valve at the top) when removing liquid refrigerant for charging. For a cylinder without a dip tube, invert the cylinder (access valve on the bottom) when removing liquid refrigerant.

Because Puron (R-410A) is a blend, it is strongly recommended that refrigerant always be removed from the cylinder as a liquid. Admit liquid refrigerant into the system in the discharge line. If adding refrigerant into the suction line, use a commercial metering/expansion device at the gauge manifold; remove liquid from the cylinder, pass it through the metering device at the gauge set and then pass it into the suction line as a vapor. Do not remove Puron (R-410A) from the cylinder as a vapor.

Refrigerant Charge

Amount of refrigerant charge is listed on the unit's nameplate. Refer to Carrier GTAC2-5 Charging, Recovery, Recycling and Reclamation training manual and the following procedures.

Unit panels must be in place when unit is operating during the charging procedure.

No Charge

Use standard evacuating techniques. After evacuating system, weigh in the specified amount of refrigerant.

Low-Charge Cooling

Using Cooling Charging Charts, Fig. 12, vary refrigerant until the conditions of the appropriate chart are met. Note the charging charts are different from type normally used. Charts are based on charging the units to the correct superheat for the various operating conditions. Accurate pressure gauge and temperature sensing device are required. Connect the pressure gauge to the service port on the suction line. Mount the temperature sensing device on the suction line and insulate it so that outdoor ambient temperature does not affect the reading. Indoor-air cfm must be within the normal operating range of the unit.

To Use Cooling Charging Charts

Take the outdoor ambient temperature and read the suction pressure gauge. Refer to chart to determine what suction temperature should be. If suction temperature is high, add refrigerant. If suction temperature is low, carefully recover some of the charge. Recheck the suction pressure as charge is adjusted.

EXAMPLE:

Model 48TC*A06

Outdoor Temperature . . . . . 85°F (29°C)

Suction Pressure . . . . . 130 psig (896 kPa)

Suction Temperature should be . . . . . 63°F (17.2°C)

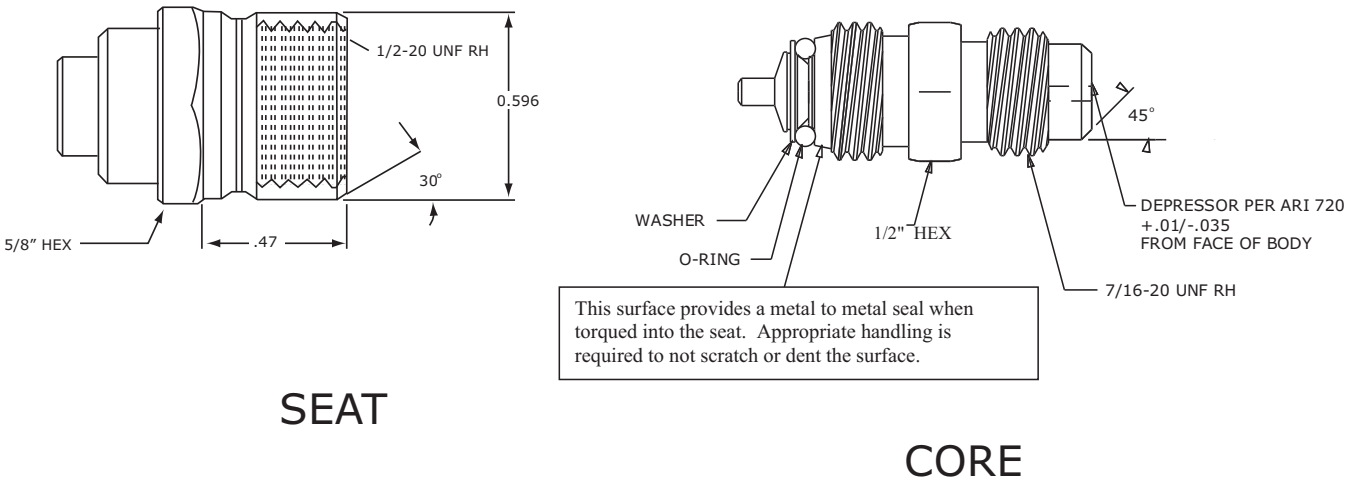

Fig. 11 - CoreMax Access Port Assembly

COOLING CHARGING CHARTS

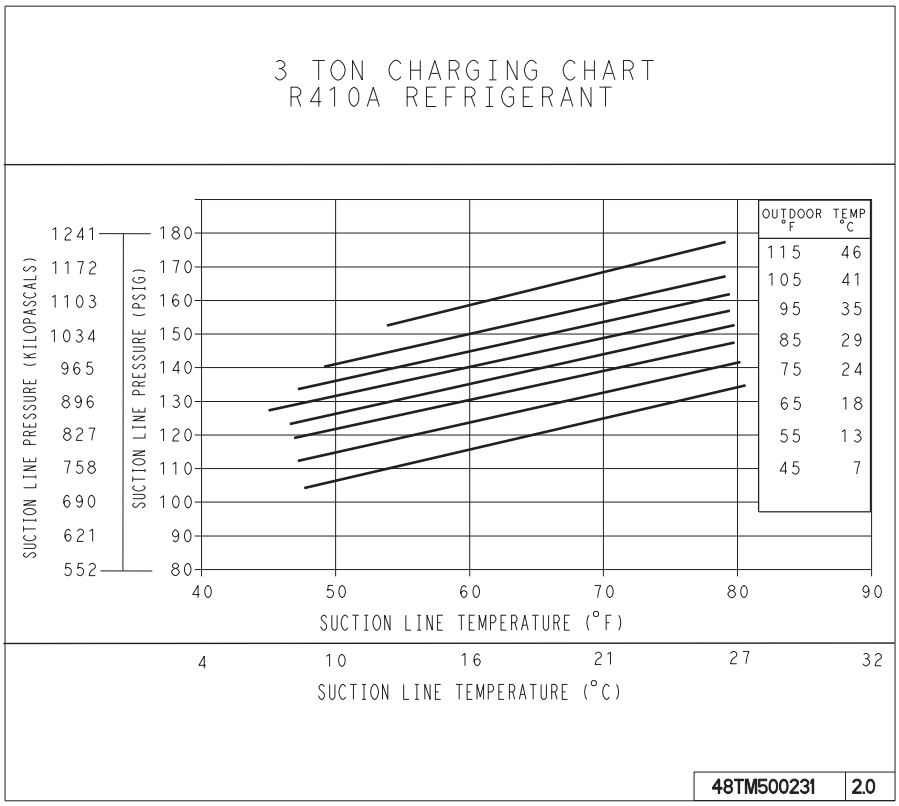

C08203

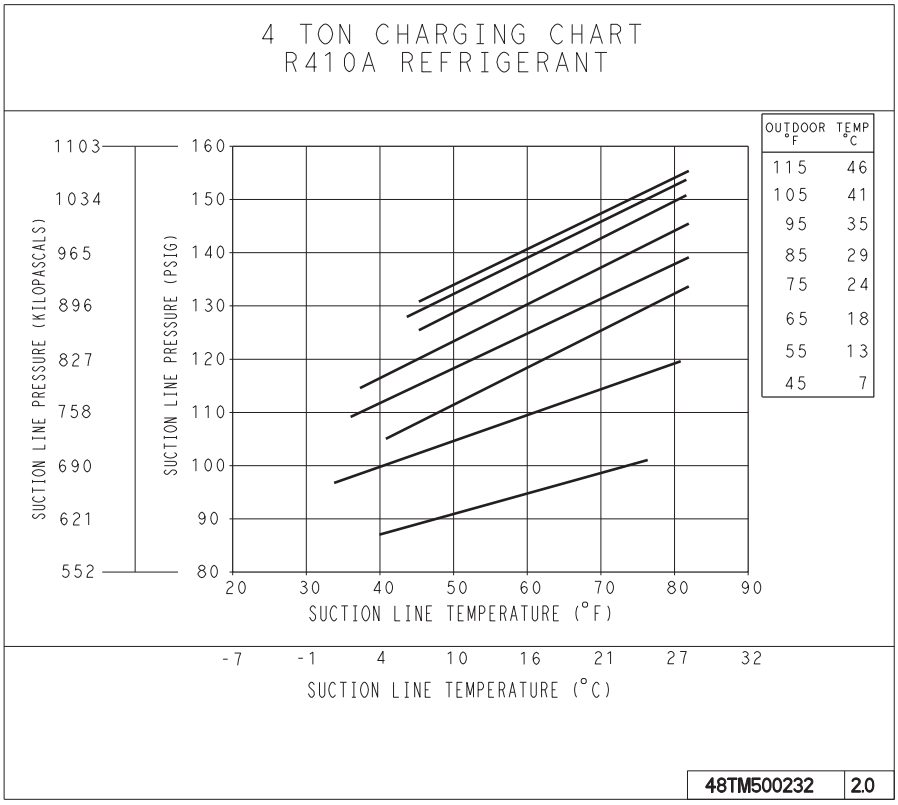

C08204

Fig. 12 - Cooling Charging Charts

48TC

COOLING CHARGING CHARTS (cont)

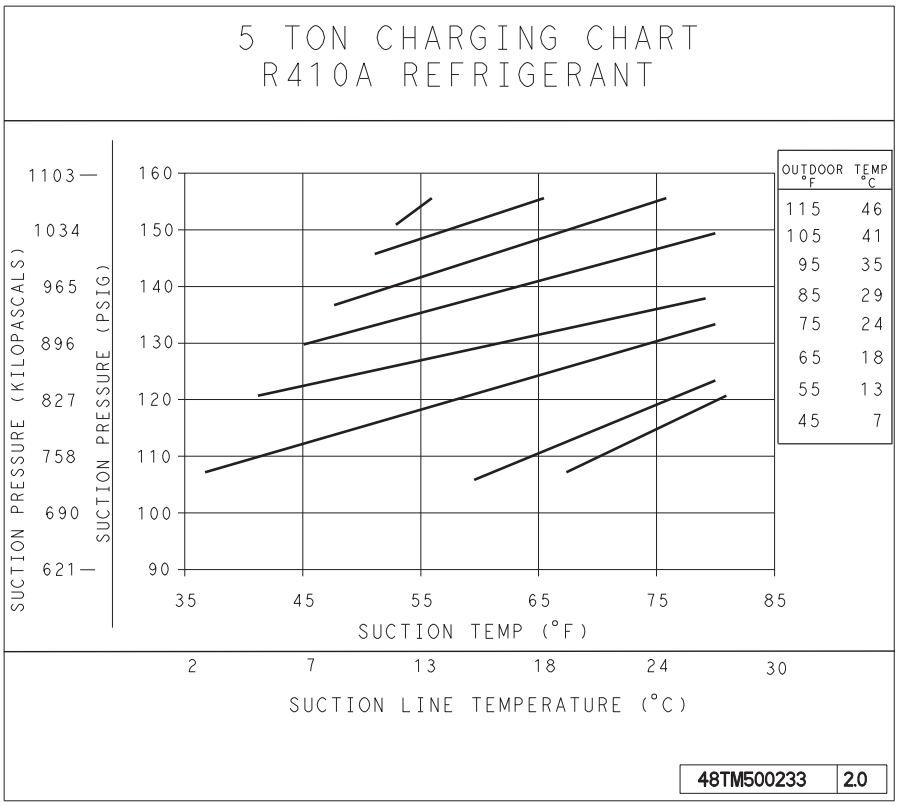

C08228

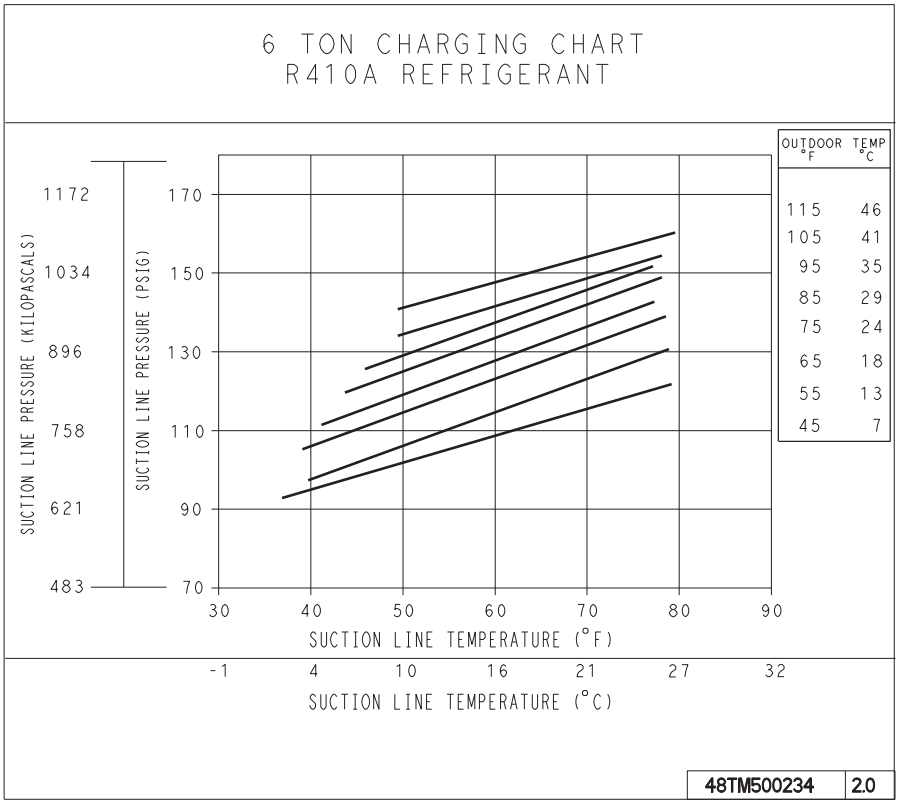

C08229

Fig. 12 - Cooling Charging Charts (cont.)

Compressor

Lubrication

The compressor is charged with the correct amount of oil at the factory.

⚠ CAUTION

UNIT DAMAGE HAZARD

Failure to follow this caution may result in damage to components.

The compressor is in a Puron® refrigerant system and uses a polyolester (POE) oil. This oil is extremely hygroscopic, meaning it absorbs water readily. POE oils can absorb 15 times as much water as other oils designed for HCFC and CFC refrigerants. Avoid exposure of the oil to the atmosphere.

Replacing Compressor

The compressor used with Puron refrigerant contains a POE oil. This oil has a high affinity for moisture. Do not remove the compressor's tube plugs until ready to insert the unit suction and discharge tube ends.

Compressor mounting bolt torque is 65-75 ft-lbs.

Compressor Rotation

On 3-phase units with scroll compressors, it is important to be certain compressor is rotating in the proper direction. To determine whether or not compressor is rotating in the proper direction:

1. Connect service gauges to suction and discharge pressure fittings.
2. Energize the compressor.
3. The suction pressure should drop and the discharge pressure should rise, as is normal on any start-up.

NOTE: If the suction pressure does not drop and the discharge pressure does not rise to normal levels:

4. Note that the evaporator fan is probably also rotating in the wrong direction.
5. Turn off power to the unit.
6. Reverse any two of the unit power leads.
7. Reapply power to the compressor.

The suction and discharge pressure levels should now move to their normal start-up levels.

NOTE: When the compressor is rotating in the wrong direction, the unit makes an elevated level of noise and does not provide cooling.

Filter Drier

Replace whenever refrigerant system is exposed to atmosphere. Only use factory specified liquid-line filter driers with working pressures no less than 650 psig. Do not install a suction-line filter drier in liquid line. A liquid-line filter drier designed for use with Puron refrigerant is required on every unit.

Condenser-Fan Location

See Fig. 13.

1. Shut off unit power supply. Install lockout tag.
2. Remove condenser-fan assembly (grille, motor, and fan).
3. Loosen fan hub setscrews.
4. Adjust fan height as shown in Fig. 13.
5. Tighten setscrews.
6. Replace condenser-fan assembly.

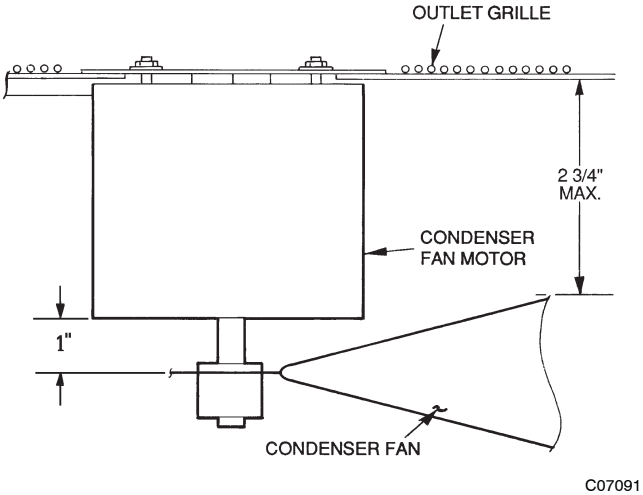

Fig. 13 - Condenser Fan Adjustment (except with Motormaster)

Troubleshooting Cooling System

Refer to Table 1 for additional troubleshooting topics.

Table 1 – Cooling Service Analysis

PROBLEM	CAUSE	REMEDY
Compressor and Condenser Fan Will Not Start.	Power failure.	Call power company.
	Fuse blown or circuit breaker tripped.	Replace fuse or reset circuit breaker.
	Defective thermostat, contactor, transformer, or control relay.	Replace component.
	Insufficient line voltage.	Determine cause and correct.
	Incorrect or faulty wiring.	Check wiring diagram and rewire correctly.
	Thermostat setting too high.	Lower thermostat setting below room temperature.
Compressor Will Not Start But Condenser Fan Runs.	Faulty wiring or loose connections in compressor circuit.	Check wiring and repair or replace.
	Compressor motor burned out, seized, or internal overload open.	Determine cause. Replace compressor.
	Defective run/start capacitor, overload, start relay.	Determine cause and replace.
	One leg of three–phase power dead.	Replace fuse or reset circuit breaker. Determine cause.
Compressor Cycles (other than normally satisfying thermostat).	Refrigerant overcharge or undercharge.	Recover refrigerant, evacuate system, and recharge to nameplate.
	Defective compressor.	Replace and determine cause.
	Insufficient line voltage.	Determine cause and correct.
	Blocked condenser.	Determine cause and correct.
	Defective run/start capacitor, overload, or start relay.	Determine cause and replace.
	Defective thermostat.	Replace thermostat.
	Faulty condenser–fan motor or capacitor.	Replace.
	Restriction in refrigerant system.	Locate restriction and remove.
Compressor Operates Continuously.	Dirty air filter.	Replace filter.
	Unit undersized for load.	Decrease load or increase unit size.
	Thermostat set too low.	Reset thermostat.
	Low refrigerant charge.	Locate leak; repair and recharge.
	Leaking valves in compressor.	Replace compressor.
	Air in system.	Recover refrigerant, evacuate system, and recharge.
	Condenser coil dirty or restricted.	Clean coil or remove restriction.
Excessive Head Pressure.	Dirty air filter.	Replace filter.
	Dirty condenser coil.	Clean coil.
	Refrigerant overcharged.	Recover excess refrigerant.
	Air in system.	Recover refrigerant, evacuate system, and recharge.
	Condenser air restricted or air short–cycling.	Determine cause and correct.
Head Pressure Too Low.	Low refrigerant charge.	Check for leaks; repair and recharge.
	Compressor valves leaking.	Replace compressor.
	Restriction in liquid tube.	Remove restriction.
Excessive Suction Pressure.	High head load.	Check for source and eliminate.
	Compressor valves leaking.	Replace compressor.
	Refrigerant overcharged.	Recover excess refrigerant.
Suction Pressure Too Low.	Dirty air filter.	Replace filter.
	Low refrigerant charge.	Check for leaks; repair and recharge.
	Metering device or low side restricted.	Remove source of restriction.
	Insufficient evaporator airflow.	Increase air quantity. Check filter and replace if necessary.
	Temperature too low in conditioned area.	Reset thermostat.
	Outdoor ambient below 25°F.	Install low–ambient kit.
Evaporator Fan Will Not Shut Off.	Time off delay not finished.	Wait for 30–second off delay.
Compressor Makes Excessive Noise.	Compressor rotating in wrong direction.	Reverse the 3–phase power leads.

CONVENIENCE OUTLETS

⚠ WARNING

ELECTRICAL OPERATION HAZARD

Failure to follow this warning could result in personal injury or death.

Units with convenience outlet circuits may use multiple disconnects. Check convenience outlet for power status before opening unit for service. Locate its disconnect switch, if appropriate, and open it. Tag-out this switch, if necessary.

Two types of convenience outlets are offered on 48TC models: Non-powered and unit-powered. Both types provide a 125-volt GFCI (ground-fault circuit-interrupter) duplex receptacle rated at 15-A behind a hinged waterproof access cover, located on the end panel of the unit. See Fig. 14.

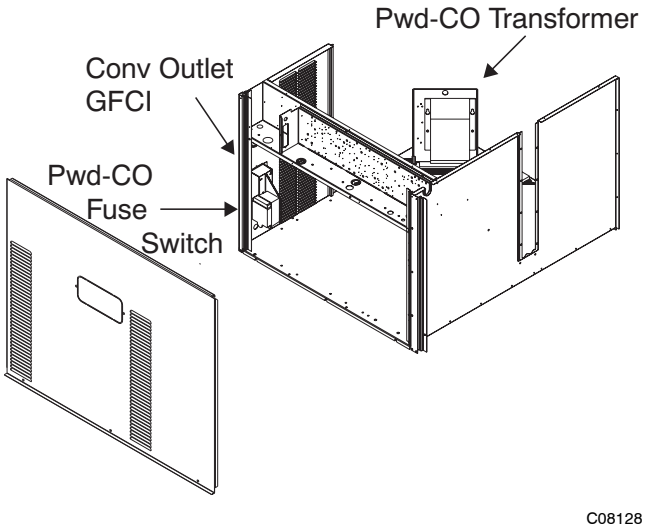

Fig. 14 - Convenience Outlet Location

Non-powered type: This type requires the field installation of a general-purpose 125-volt 15-A circuit powered from a source elsewhere in the building. Observe national and local codes when selecting wire size, fuse or breaker requirements and disconnect switch size and location. Route 125-v power supply conductors into the bottom of the utility box containing the duplex receptacle.

Unit-powered type: A unit-mounted transformer is factory-installed to stepdown the main power supply voltage to the unit to 115-v at the duplex receptacle. This option also includes a manual switch with fuse, located in a utility box and mounted on a bracket behind the convenience outlet; access is through the unit's control box access panel. See Fig. 14.

The primary leads to the convenience outlet transformer are not factory-connected. Selection of primary power source is a customer-option. If local codes permit, the transformer primary leads can be connected at the line-side terminals on a unit-mounted non-fused disconnect or HACR breaker switch; this will provide service power to the unit when the unit disconnect switch or HACR switch is open. Other connection methods will result in the convenience outlet circuit being de-energized when the unit disconnect or HACR switch is open. See Fig. 15.

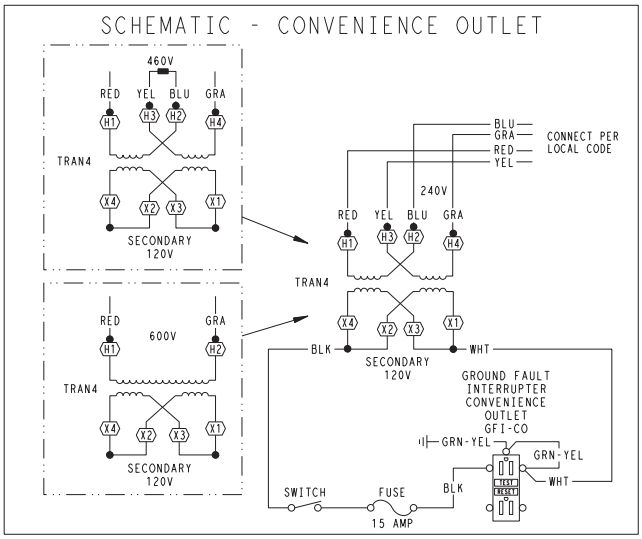

Fig. 15 - Powered Convenience Outlet Wiring

Duty Cycle: The unit-powered convenience outlet has a duty cycle limitation. The transformer is intended to provide power on an intermittent basis for service tools, lamps, etc; it is not intended to provide 15-amps loading for continuous duty loads (such as electric heaters for overnight use). Observe a 50% limit on circuit loading above 8-amps (i.e., limit loads exceeding 8-amps to 30 minutes of operation every hour).

Maintenance: Periodically test the GFCI receptacle by pressing the TEST button on the face of the receptacle. This should cause the internal circuit of the receptacle to trip and open the receptacle. Check for proper grounding wires and power line phasing if the GFCI receptacle does not trip as required. Press the RESET button to clear the tripped condition.

Fuse on powered type: The factory fuse is a Bussman "Fusetron" T-15, non-renewable screw-in (Edison base) type plug fuse.

Using unit-mounted convenience outlets: Units with unit-mounted convenience outlet circuits will often require that two disconnects be opened to de-energize all power to the unit. Treat all units as electrically energized until the convenience outlet power is also checked and de-energization is confirmed. Observe National Electrical Code Article 210, Branch Circuits, for use of convenience outlets.

SMOKE DETECTORS

Smoke detectors are available as factory-installed options on 48TC models. Smoke detectors may be specified for Supply Air only or for Return Air without or with economizer or in combination of Supply Air and Return Air. Return Air smoke detectors are arranged for vertical return configurations only. All components necessary for

operation are factory-provided and mounted. The unit is factory-configured for immediate smoke detector shutdown operation; additional wiring or modifications to unit terminal board may be necessary to complete the unit and smoke detector configuration to meet project requirements.

System

The smoke detector system consists of a four-wire controller and one or two sensors. Its primary function is to shut down the rooftop unit in order to prevent smoke from circulating throughout the building. It is not to be used as a life saving device.

Controller

The controller (see Fig. 16) includes a controller housing, a printed circuit board, and a clear plastic cover. The controller can be connected to one or two compatible duct smoke sensors. The clear plastic cover is secured to the housing with a single captive screw for easy access to the wiring terminals. The controller has three LEDs (for Power, Trouble and Alarm) and a manual test/reset button (on the cover face).

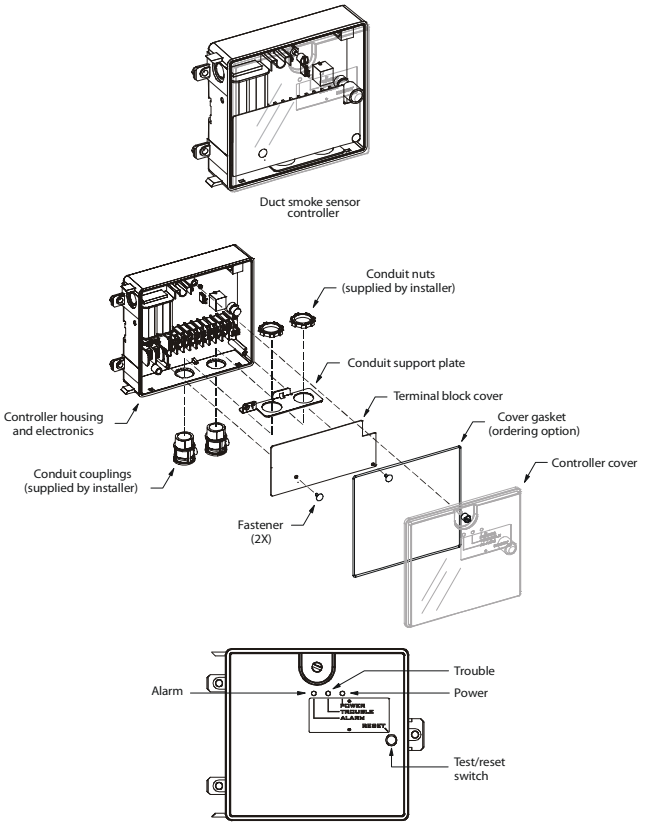

Fig. 16 - Controller Assembly

Sensor

The sensor (see Fig. 17) includes a plastic housing, a printed circuit board, a clear plastic cover, a sampling tube inlet and an exhaust tube. The sampling tube (when used) and exhaust tube are attached during installation. The sampling tube varies in length depending on the size of the rooftop unit. The clear plastic cover permits visual inspections without having to disassemble the sensor. The cover attaches to the sensor housing using four captive screws and forms an airtight chamber around the sensing electronics. Each sensor includes a harness with an RJ45 terminal for connecting to the controller. Each sensor has four LEDs (for Power, Trouble, Alarm and Dirty) and a manual test/reset button (on the left-side of the housing).

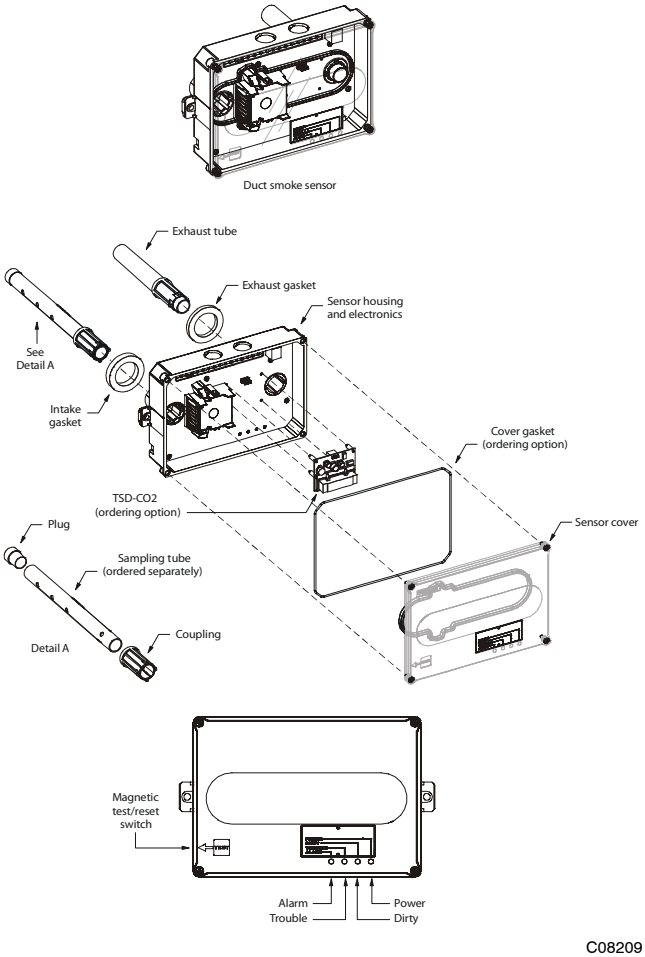

Fig. 17 - Smoke Detector Sensor

Air is introduced to the duct smoke detector sensor's sensing chamber through a sampling tube that extends into the HVAC duct and is directed back into the ventilation system through a (shorter) exhaust tube. The difference in air pressure between the two tubes pulls the sampled air through the sensing chamber. When a sufficient amount of smoke is detected in the sensing chamber, the sensor signals an alarm state and the controller automatically takes the appropriate action to shut down fans and blowers, change over air handling systems, notify the fire alarm control panel, etc.

The sensor uses a process called differential sensing to prevent gradual environmental changes from triggering false alarms. A rapid change in environmental conditions, such as smoke from a fire, causes the sensor to signal an alarm state but dust and debris accumulated over time does not.

For installations using two sensors, the duct smoke detector does not differentiate which sensor signals an alarm or trouble condition.

Smoke Detector Locations

Supply Air — The Supply Air smoke detector sensor is located to the left of the unit's indoor (supply) fan. See Fig. 18. Access is through the fan access panel. There is no sampling tube used at this location. The sampling tube inlet extends through the side plate of the fan housing (into a high pressure area). The controller is located on a bracket to the right of the return filter, accessed through the lift-off filter panel.

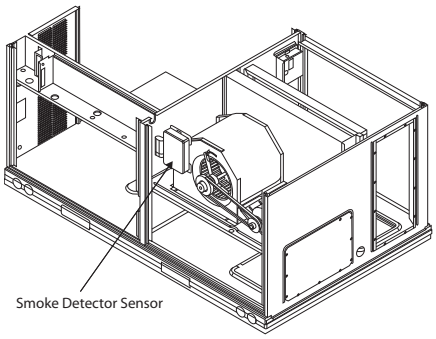

C08245

Fig. 18 - Typical Supply Air Smoke Detector Sensor Location

Return Air without Economizer — The sampling tube is located across the return air opening on the unit basepan. See Fig. 19. The holes in the sampling tube face downward, into the return air stream. The sampling tube is connected via tubing to the return air sensor that is mounted on a bracket high on the partition between return filter and controller location. (This sensor is shipped in a flat-mounting location. Installation requires that this sensor be relocated to its operating location and the tubing to the sampling tube be connected. See installation steps below.)

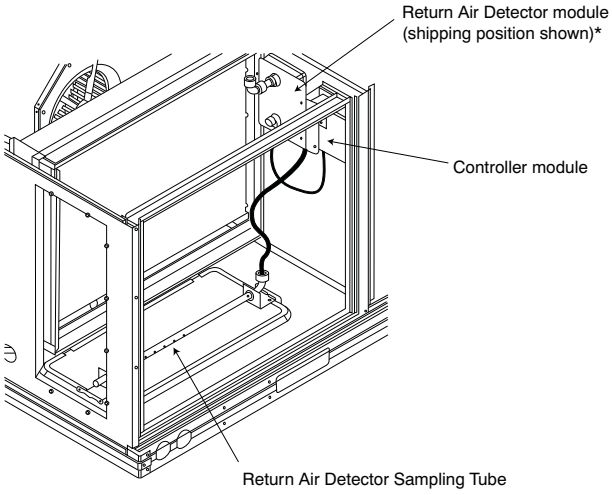

*RA detector must be moved from shipping position to operating position by installer

C07307

Fig. 19 - Typical Return Air Detector Location

Return Air with Economizer — The sampling tube is inserted through the side plates of the economizer housing, placing it across the return air opening on the unit basepan. See Fig. 20. The holes in the sampling tube face downward, into the return air stream. The sampling tube is connected via tubing to the return air sensor that is mounted on a bracket high on the partition between return filter and controller location. (This sensor is shipped in a flat-mounting location. Installation requires that this sensor be relocated to its operating location and the tubing to the sampling tube be connected. See installation steps below.)

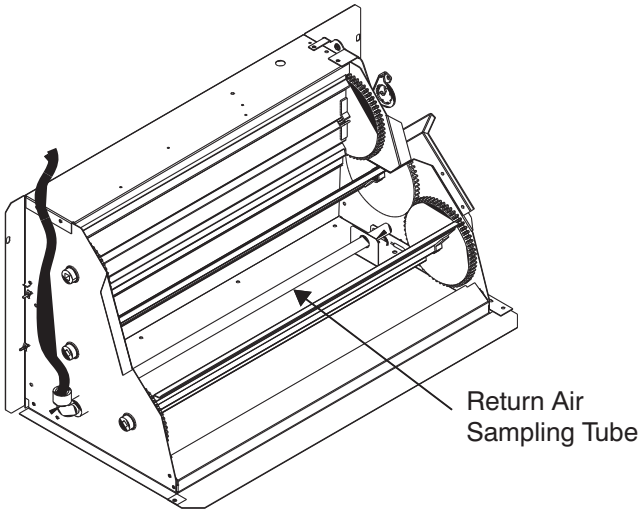

C08129

Fig. 20 - Return Air Sampling Tube Location

Completing Installation of Return Air Smoke Sensor:

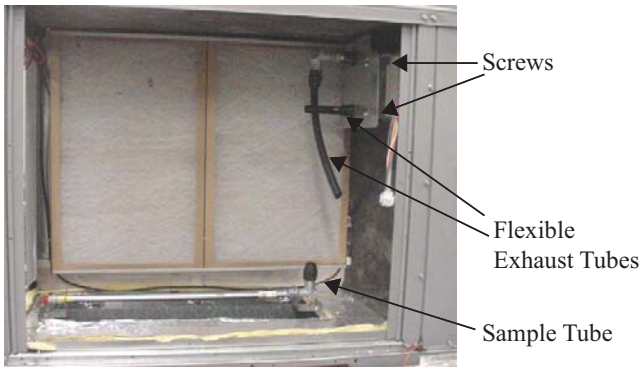

C08126

Fig. 21 - Return Air Detector Shipping Position

1. Unscrew the two screws holding the Return Air Sensor detector plate. See Fig 21. Save the screws.
2. Remove the Return Air Sensor and its detector plate.
3. Rotate the detector plate so the sensor is facing outwards and the sampling tube connection is on the bottom. See Fig 22.
4. Screw the sensor and detector plate into its operating position using screws from Step 1. Make sure the sampling tube connection is on the bottom and the exhaust tube is on the top. See Fig 22.
5. Connect the flexible tube on the sampling inlet to the sampling tube on the basepan.

6. For units with an economizer, the sampling tube is integrated into the economizer housing but the connection of the flexible tubing to the sampling tube is the same.

C08127

Fig. 22 - Return Air Sensor Operating Position

FIOP Smoke Detector Wiring and Response

All units: FIOP smoke detector is configured to automatically shut down all unit operations when smoke condition is detected. See Fig. 23, Smoke Detector Wiring.

Highlight A: JMP 3 is factory-cut, transferring unit control to smoke detector.

Highlight B: Smoke detector NC contact set will open on smoke alarm condition, de-energizing the ORN conductor.

Highlight C: 24-v power signal via ORN lead is removed at Smoke Detector input on LCTB; all unit operations cease immediately.

PremierLink Control: Unit operating functions (fan, cooling and heating) are terminated as described above. In addition:

Highlight D: On smoke alarm condition, the smoke detector NO Alarm contact will close, supplying 24-v power to GRA conductor.

Highlight E: GRA lead at Smoke Alarm input on LCTB provides 24-v signal. This signal is conveyed to PremierLink FIOP's TB1 at terminal TB1-6 (BLU lead). This signal initiates the FSD sequence by the PremierLink control.

Using Remote Logic: Five conductors are provided for field use (see Highlight F) for additional annunciation functions.

Additional Application Data — Refer to Catalog No. HKRNKA-1XA for discussions on additional control features of these smoke detectors including multiple unit coordination. See Fig. 23.

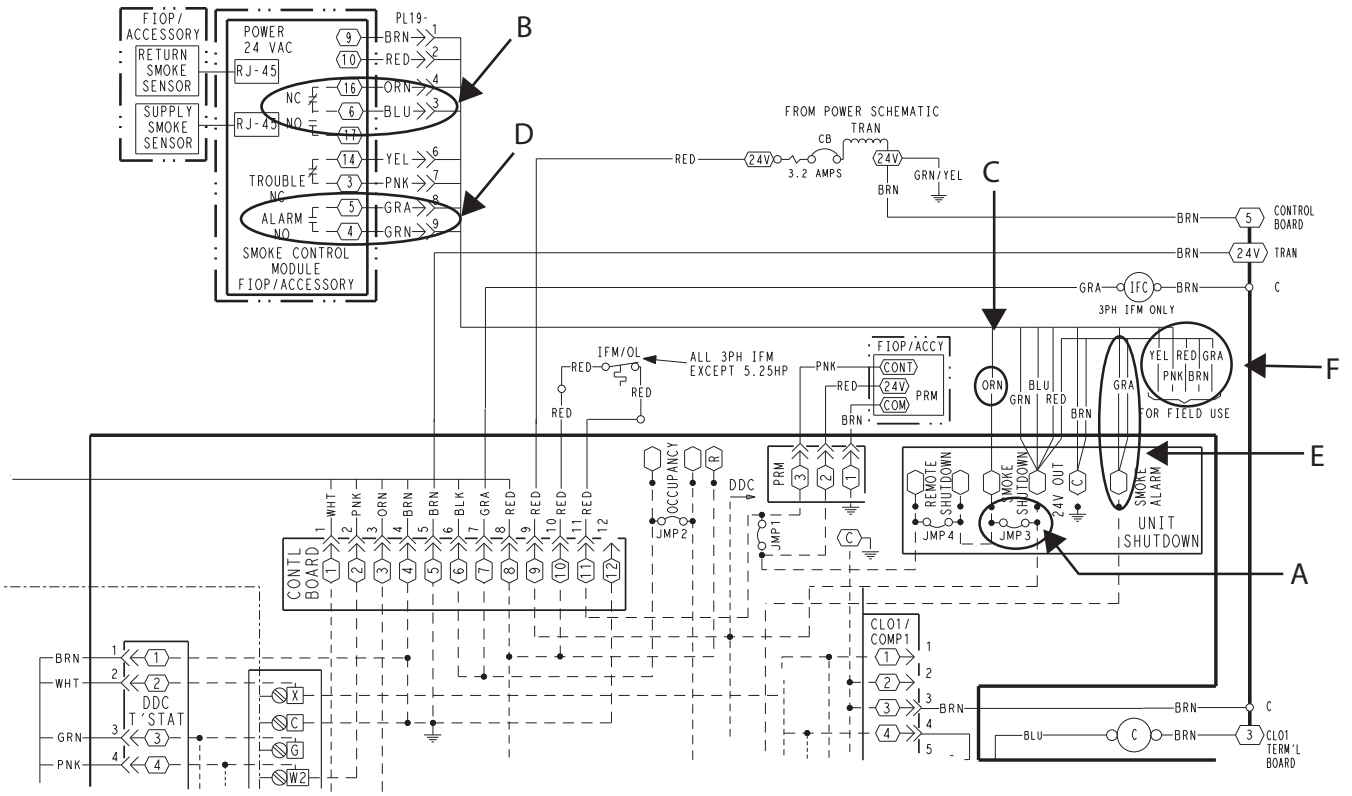

C08246

Fig. 23 - Typical Smoke Detector System Wiring

Sensor and Controller Tests

Sensor Alarm Test

The sensor alarm test checks a sensor's ability to signal an alarm state. This test requires that you use a field provided SD-MAG test magnet.

⚠ CAUTION

OPERATIONAL TEST HAZARD

Failure to follow this caution may result in personnel and authority concern.

This test places the duct detector into the alarm state. Unless part of the test, disconnect all auxiliary equipment from the controller before performing the test. If the duct detector is connected to a fire alarm system, notify the proper authorities before performing the test.

Sensor Alarm Test Procedure

1. Hold the test magnet where indicated on the side of the sensor housing for seven seconds.
2. Verify that the sensor's Alarm LED turns on.
3. Reset the sensor by holding the test magnet against the sensor housing for two seconds.
4. Verify that the sensor's Alarm LED turns off.

Controller Alarm Test

The controller alarm test checks the controller's ability to initiate and indicate an alarm state.

⚠ CAUTION

OPERATIONAL TEST HAZARD

Failure to follow this caution may result in personnel and authority concern.

This test places the duct detector into the alarm state. Disconnect all auxiliary equipment from the controller before performing the test. If the duct detector is connected to a fire alarm system, notify the proper authorities before performing the test.

Controller Alarm Test Procedure

1. Press the controller's test/reset switch for seven seconds.
2. Verify that the controller's Alarm LED turns on.
3. Reset the sensor by pressing the test/reset switch for two seconds.
4. Verify that the controller's Alarm LED turns off.

Dirty Controller Test

The dirty controller test checks the controller's ability to initiate a dirty sensor test and indicate its results.

⚠ CAUTION

OPERATIONAL TEST HAZARD

Failure to follow this caution may result in personnel and authority concern.

Pressing the controller's test/reset switch for longer than seven seconds will put the duct detector into the alarm state and activate all automatic alarm responses.

Dirty Controller Test Procedure

1. Press the controller's test/reset switch for two seconds.
2. Verify that the controller's Trouble LED flashes.

Dirty Sensor Test

The dirty sensor test provides an indication of the sensor's ability to compensate for gradual environmental changes. A sensor that can no longer compensate for environmental changes is considered 100% dirty and requires cleaning or replacing. You must use a field provided SD-MAG test magnet to initiate a sensor dirty test. The sensor's Dirty LED indicates the results of the dirty test as shown in Table 2.

⚠ CAUTION

OPERATIONAL TEST HAZARD

Failure to follow this caution may result in personnel and authority concern.

Holding the test magnet against the sensor housing for more than seven seconds will put the duct detector into the alarm state and activate all automatic alarm responses.

Table 2 – Dirty LED Test

FLASHES	DESCRIPTION
1	0–25% dirty. (Typical of a newly installed detector)
2	25–50% dirty
3	51–75% dirty
4	76–99% dirty

Dirty Sensor Test Procedure

1. Hold the test magnet where indicated on the side of the sensor housing for two seconds.
2. Verify that the sensor's Dirty LED flashes.

⚠ CAUTION

OPERATIONAL TEST HAZARD

Failure to follow this caution may result in personnel and authority concern.

Changing the dirty sensor test operation will put the detector into the alarm state and activate all automatic alarm responses. Before changing dirty sensor test operation, disconnect all auxiliary equipment from the controller and notify the proper authorities if connected to a fire alarm system.

Changing the Dirt Sensor Test

By default, sensor dirty test results are indicated by:

- The sensor's Dirty LED flashing.
- The controller's Trouble LED flashing.
- The controller's supervision relay contacts toggle.

The operation of a sensor's dirty test can be changed so that the controller's supervision relay is not used to indicate test results. When two detectors are connected to a controller, sensor dirty test operation on both sensors must be configured to operate in the same manner.

To Configure the Dirty Sensor Test Operation

1. Hold the test magnet where indicated on the side of the sensor housing until the sensor's Alarm LED turns on and its Dirty LED flashes twice (approximately 60 seconds).
2. Reset the sensor by removing the test magnet then holding it against the sensor housing again until the sensor's Alarm LED turns off (approximately 2 seconds).

Remote Station Test

The remote station alarm test checks a test/reset station's ability to initiate and indicate an alarm state.

⚠ CAUTION

OPERATIONAL TEST HAZARD

Failure to follow this caution may result in personnel and authority concern.

This test places the duct detector into the alarm state. Unless part of the test, disconnect all auxiliary equipment from the controller before performing the test. If the duct detector is connected to a fire alarm system, notify the proper authorities before performing the test.

SD-TRK4 Remote Alarm Test Procedure

1. Turn the key switch to the RESET/TEST position for seven seconds.
2. Verify that the test/reset station's Alarm LED turns on.
3. Reset the sensor by turning the key switch to the RESET/TEST position for two seconds.
4. Verify that the test/reset station's Alarm LED turns off.

Remote Test/Reset Station Dirty Sensor Test

The test/reset station dirty sensor test checks the test/reset station's ability to initiate a sensor dirty test and indicate the results. It must be wired to the controller as shown in Fig. 24 and configured to operate the controller's supervision relay. For more information, see "Changing sensor dirty test operation."

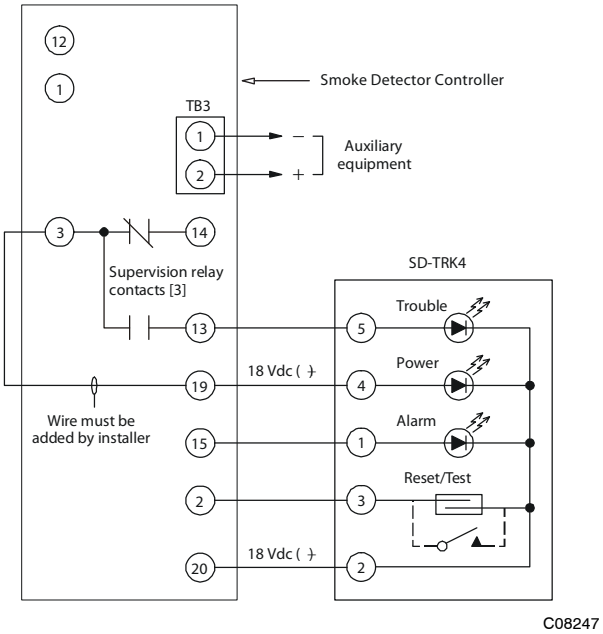

Fig. 24 - Remote Test/Reset Station Connections

⚠ CAUTION

OPERATIONAL TEST HAZARD

Failure to follow this caution may result in personnel and authority concern.

If the test/reset station's key switch is left in the RESET/TEST position for longer than seven seconds, the detector will automatically go into the alarm state and activate all automatic alarm responses.

⚠ CAUTION

OPERATIONAL TEST HAZARD

Failure to follow this caution may result in personnel and authority concern.

Holding the test magnet to the target area for longer than seven seconds will put the detector into the alarm state and activate all automatic alarm responses.

Dirty Sensor Test Using an SD-TRK4

1. Turn the key switch to the RESET/TEST position for two seconds.
2. Verify that the test/reset station's Trouble LED flashes.

DETECTOR CLEANING

Cleaning the Smoke Detector

Clean the duct smoke sensor when the Dirty LED is flashing continuously or sooner if conditions warrant.

Table 3 – Detector Indicators

CONTROL OR INDICATOR	DESCRIPTION
Magnetic test/reset switch	Resets the sensor when it is in the alarm or trouble state. Activates or tests the sensor when it is in the normal state.
Alarm LED	Indicates the sensor is in the alarm state.
Trouble LED	Indicates the sensor is in the trouble state.
Dirty LED	Indicates the amount of environmental compensation used by the sensor (flashing continuously = 100%)
Power LED	Indicates the sensor is energized.

⚠ CAUTION

OPERATIONAL TEST HAZARD

Failure to follow this caution may result in personnel and authority concern.

If the smoke detector is connected to a fire alarm system, first notify the proper authorities that the detector is undergoing maintenance then disable the relevant circuit to avoid generating a false alarm.

1. Disconnect power from the duct detector then remove the sensor's cover. (See Fig. 25.)
2. Using a vacuum cleaner, clean compressed air, or a soft bristle brush, remove loose dirt and debris from inside the sensor housing and cover.
   Use isopropyl alcohol and a lint-free cloth to remove dirt and other contaminants from the gasket on the sensor's cover.
3. Squeeze the retainer clips on both sides of the optic housing then lift the housing away from the printed circuit board.
4. Gently remove dirt and debris from around the optic plate and inside the optic housing.
5. Replace the optic housing and sensor cover.
6. Connect power to the duct detector then perform a sensor alarm test.

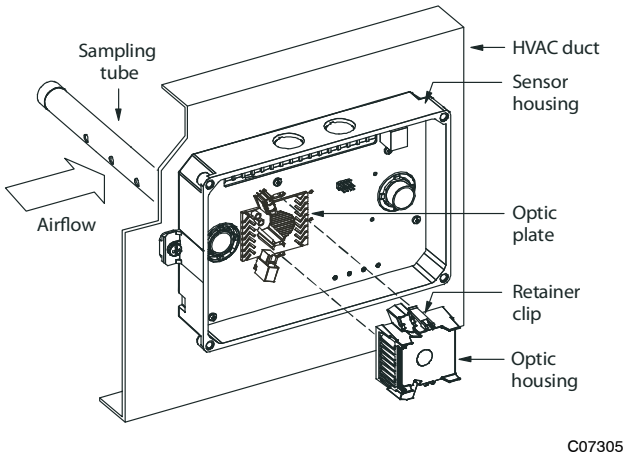

Fig. 25 - Sensor Cleaning Diagram

INDICATORS

Normal State

The smoke detector operates in the normal state in the absence of any trouble conditions and when its sensing chamber is free of smoke. In the normal state, the Power LED on both the sensor and the controller are on and all other LEDs are off.

Alarm State

The smoke detector enters the alarm state when the amount of smoke particulate in the sensor's sensing chamber exceeds the alarm threshold value. (See Table 3.) Upon entering the alarm state:

- The sensor's Alarm LED and the controller's Alarm LED turn on.
- The contacts on the controller's two auxiliary relays switch positions.
- The contacts on the controller's alarm initiation relay close.
- The controller's remote alarm LED output is activated (turned on).
- The controller's high impedance multiple fan shutdown control line is pulled to ground Trouble state.

The SuperDuct duct smoke detector enters the trouble state under the following conditions:

- A sensor's cover is removed and 20 minutes pass before it is properly secured.
- A sensor's environmental compensation limit is reached (100% dirty).
- A wiring fault between a sensor and the controller is detected.

An internal sensor fault is detected upon entering the trouble state:

- The contacts on the controller's supervisory relay switch positions. (See Fig. 26.)
- If a sensor trouble, the sensor's Trouble LED the controller's Trouble LED turn on.
- If 100% dirty, the sensor's Dirty LED turns on and the controller's Trouble LED flashes continuously.

- If a wiring fault between a sensor and the controller, the controller's Trouble LED turns on but not the sensor's.

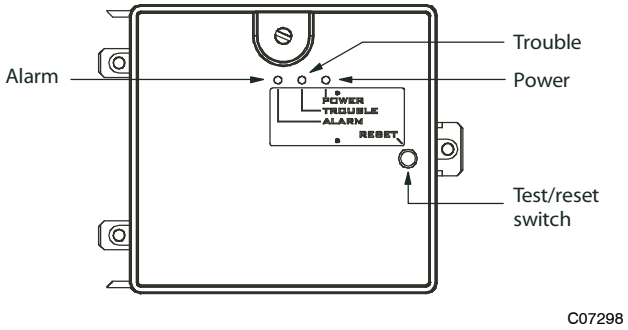

Fig. 26 - Controller Assembly

NOTE: All troubles are latched by the duct smoke detector. The trouble condition must be cleared and then the duct smoke detector must be reset in order to restore it to the normal state.

Resetting Alarm and Trouble Condition Trips:

Manual reset is required to restore smoke detector systems to Normal operation. For installations using two sensors, the duct smoke detector does not differentiate which sensor signals an alarm or trouble condition. Check each sensor for Alarm or Trouble status (indicated by LED). Clear the condition that has generated the trip at this sensor. Then reset the sensor by pressing and holding the reset button (on the side) for 2 seconds. Verify that the sensor's Alarm and Trouble LEDs are now off. At the controller, clear its Alarm or Trouble state by pressing and holding the manual reset button (on the front cover) for 2 seconds. Verify that the controller's Alarm and Trouble LEDs are now off. Replace all panels.

TROUBLESHOOTING

Controller's Trouble LED is On

1. Check the Trouble LED on each sensor connected to the controller. If a sensor's Trouble LED is on, determine the cause and make the necessary repairs.
2. Check the wiring between the sensor and the controller. If wiring is loose or missing, repair or replace as required.

Controller's Trouble LED is Flashing

1. One or both of the sensors is 100% dirty.
2. Determine which Dirty LED is flashing then clean that sensor assembly as described in the detector cleaning section.

Sensor's Trouble LED is On

1. Check the sensor's Dirty LED. If it is flashing, the sensor is dirty and must be cleaned.
2. Check the sensor's cover. If it is loose or missing, secure the cover to the sensor housing.
3. Replace sensor assembly.

Sensor's Power LED is Off

1. Check the controller's Power LED. If it is off, determine why the controller does not have power and make the necessary repairs.
2. Check the wiring between the sensor and the controller. If wiring is loose or missing, repair or replace as required.

Controller's Power LED is Off

1. Make sure the circuit supplying power to the controller is operational. If not, make sure JP2 and JP3 are set correctly on the controller before applying power.
2. Verify that power is applied to the controller's supply input terminals. If power is not present, replace or repair wiring as required.

Remote Test/Reset Station's Trouble LED Does Not flash When Performing a Dirty Test, But the Controller's Trouble LED Does

1. Verify that the remote test/station is wired as shown in Fig. 23. Repair or replace loose or missing wiring.
2. Configure the sensor dirty test to activate the controller's supervision relay. See "Changing sensor dirty test operation."

Sensor's Trouble LED is On, But the Controller's Trouble LED is OFF

Remove JP1 on the controller.

PROTECTIVE DEVICES

Compressor Protection

Overcurrent

The compressor has internal linebreak motor protection.

Overtemperature

The compressor has an internal protector to protect it against excessively high discharge gas temperatures.

High Pressure Switch

The system is provided with a high pressure switch mounted on the discharge line. The switch is stem-mounted and brazed into the discharge tube. Trip setting is 630 psig +/- 10 psig (4344 +/- 69 kPa) when hot. Reset is automatic at 505 psig (3482 kPa).

Low Pressure Switch

The system is protected against a loss of charge and low evaporator coil loading condition by a low pressure switch located on the suction line near the compressor. The switch is stem-mounted. Trip setting is 54 psig +/- 5 psig (372 +/- 34 kPa). Reset is automatic at 117 +/- 5 psig (807 +/- 34 kPa).

Evaporator Freeze Protection

The system is protected against evaporator coil frosting and low temperature conditions by a temperature switch mounted on the evaporator coil hairpin. Trip setting is 30°F +/- 5°F (-1°C +/- 3°C). Reset is automatic at 45°F (7°C).

Supply (Indoor) Fan Motor Protection

Disconnect and lockout power when servicing fan motor.

The standard supply fan motor is equipped with internal overcurrent and overtemperature protection. Protection devices reset automatically.

The High Static option supply fan motor is equipped with a pilot-circuit Thermix combination overtemperature/overcurrent protection device. This device resets automatically. Do not bypass this switch to correct trouble. Determine the cause and correct it.

Condenser Fan Motor Protection

The condenser fan motor is internally protected against overtemperature.

Relief Device

A soft solder joint at the suction service access port provides pressure relief under abnormal temperature and pressure conditions (i.e., fire in building). Protect this joint during brazing operations near this joint.

Control Circuit, 24-V

The control circuit is protected against overcurrent conditions by a circuit breaker mounted on control transformer TRAN. Reset is manual.

GAS HEATING SYSTEM

General

The heat exchanger system consists of a gas valve feeding multiple inshot burners off a manifold. The burners fire into matching primary tubes. The primary tubes discharge into combustion plenum where gas flow converges into secondary tubes. The secondary tubes exit into the induced draft fan wheel inlet. The induced fan wheel discharges into a flue passage and flue gases exit out a flue hood on the side of the unit. The induced draft fan motor includes a Hall Effect sensor circuit that confirms adequate wheel speed via the Integrated Gas Control (IGC) board. Safety switches include a Rollout Switch (at the top of the burner compartment) and a limit switch (mounted through the fan deck, over the tubes). (See Fig. 27 and 28.)

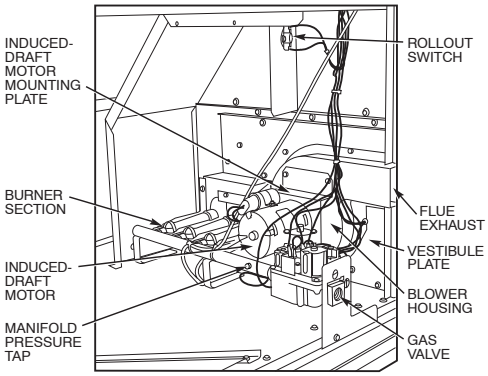

C06152

Fig. 27 - Burner Section Details

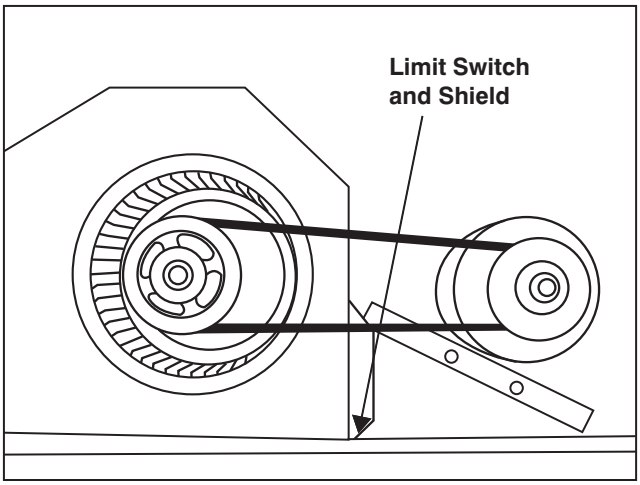

C08284

Fig. 28 - Limit Switch Location

Fuel Types and Pressures

Natural Gas — The 48TC unit is factory-equipped for use with Natural Gas fuel at elevation under 2000 ft (610 m). See section Orifice Replacement for information in modifying this unit for installation at elevations above 2000 ft (610 m).

Gas line pressure entering the unit's main gas valve must be within specified ranges. Adjust unit gas regulator valve as required or consult local gas utility.

Table 4 – Natural Gas Supply Line Pressure Ranges

UNIT MODEL	UNIT SIZE	MIN	MAX
48TC	All	4.0 in. wg (996 Pa)	13.0 in. wg (3240 Pa)

Manifold pressure is factory-adjusted for NG fuel use. Adjust as required to obtain best flame characteristic.

Table 5 – Natural Gas Manifold Pressure Ranges

UNIT MODEL	UNIT SIZE	HIGH FIRE	LOW FIRE	RANGE
48TCD,S 48TCE,R 48TCF,T	All	3.5 in. wg (872 Pa)	1.7 in. wg (423 Pa)†	2.0–5.0 in. wg (Hi) (498–1245 Pa)
48TCL 48TCM 48TCN	All	3.5 in. wg (872 Pa)	NA	2.0–5.0 in. wg (Hi) (498–1245 Pa)

NA: Not Available
† 3 Phase models only

Liquid Propane — Accessory packages are available for field-installation that will convert the 48TC unit (except low NO_x model) to operate with Liquid Propane (LP) fuels. These kits include new orifice spuds, new springs for gas valves and a supply line low pressure switch. See section on Orifice Replacement for details on orifice size selections.

Low NO_x models include specially-sized orifices and use of different flue flow limits and tube baffles. Because of

these extra features, conversion of these models to LP is not recommended.

Fuel line pressure entering unit gas valve must remain within specified range.

Table 6 – Liquid Propane Supply Line Pressure Ranges

UNIT MODEL	UNIT SIZE	MIN	MAX
48TCD,E,F 48TCS,R,T	All	11.0 in. wg (2740 Pa)	13.0 in. wg (3240 Pa)
48TCL,M,N	All	NA	NA

Manifold pressure for LP fuel use must be adjusted to specified range. Follow instructions in the accessory kit to make initial readjustment.

Table 7 – Liquid Propane Manifold Pressure Ranges

UNIT MODEL	UNIT SIZE	HIGH FIRE	LOW FIRE
48TCD,S 48TCE,R 48TCF,T	All	10.0 in. wg (2490 Pa)	5.0 in. wg (1245 Pa)†
48TCL, 48TCM, 48TCN	All	NA	NA

NA: Not Available
† 3 Phase models only

Supply Pressure Switch — The LP conversion kit includes a supply low pressure switch. The switch contacts (from terminal C to terminal NO) will open the gas valve power whenever the supply line pressure drops below the setpoint. See Fig. 29. If the low pressure remains open for 15 minutes during a call for heat, the IGC circuit will initiate a Ignition Fault (5 flashes) lockout. Reset of the low pressure switch is automatic on rise in supply line pressure. Reset of the IGC requires a recycle of unit power after the low pressure switch has closed.

C08238

Fig. 29 - LP Low Pressure Switch (Installed)

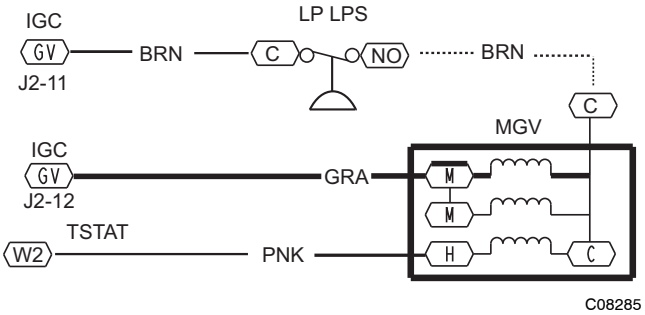

Fig. 30 - LP Supply Line Low Pressure Switch Wiring

This switch also prevents operation when the propane tank level is low which can result in gas with a high concentration of impurities, additives, and residues that have settled to the bottom of the tank. Operation under these conditions can cause harm to the heat exchanger system. Contact your fuel supplier if this condition is suspected.

Flue Gas Passageways

To inspect the flue collector box and upper areas of the heat exchanger:

1. Remove the combustion blower wheel and motor assembly according to directions in Combustion-Air Blower section. See Fig. 31.
2. Remove the flue cover to inspect the heat exchanger.
3. Clean all surfaces as required using a wire brush.

Combustion-Air Blower

Clean periodically to assure proper airflow and heating efficiency. Inspect blower wheel every fall and periodically during heating season. For the first heating season, inspect blower wheel bi-monthly to determine proper cleaning frequency.

To access burner section, slide the sliding burner partition out of the unit.

To inspect blower wheel, shine a flashlight into draft hood opening. If cleaning is required, remove motor and wheel as follows:

1. Slide burner access panel out.
2. Remove the 7 screws that attach induced-draft motor housing to vestibule plate. (See Fig. 31.)
3. The blower wheel can be cleaned at this point. If additional cleaning is required, continue with Steps 4 and 5.
4. To remove blower from the motor shaft, remove 2 setscrews.
5. To remove motor, remove the 4 screws that hold the motor to mounting plate. Remove the motor cooling fan by removing one setscrew. Then remove nuts that hold motor to mounting plate.
6. To reinstall, reverse the procedure outlined above.

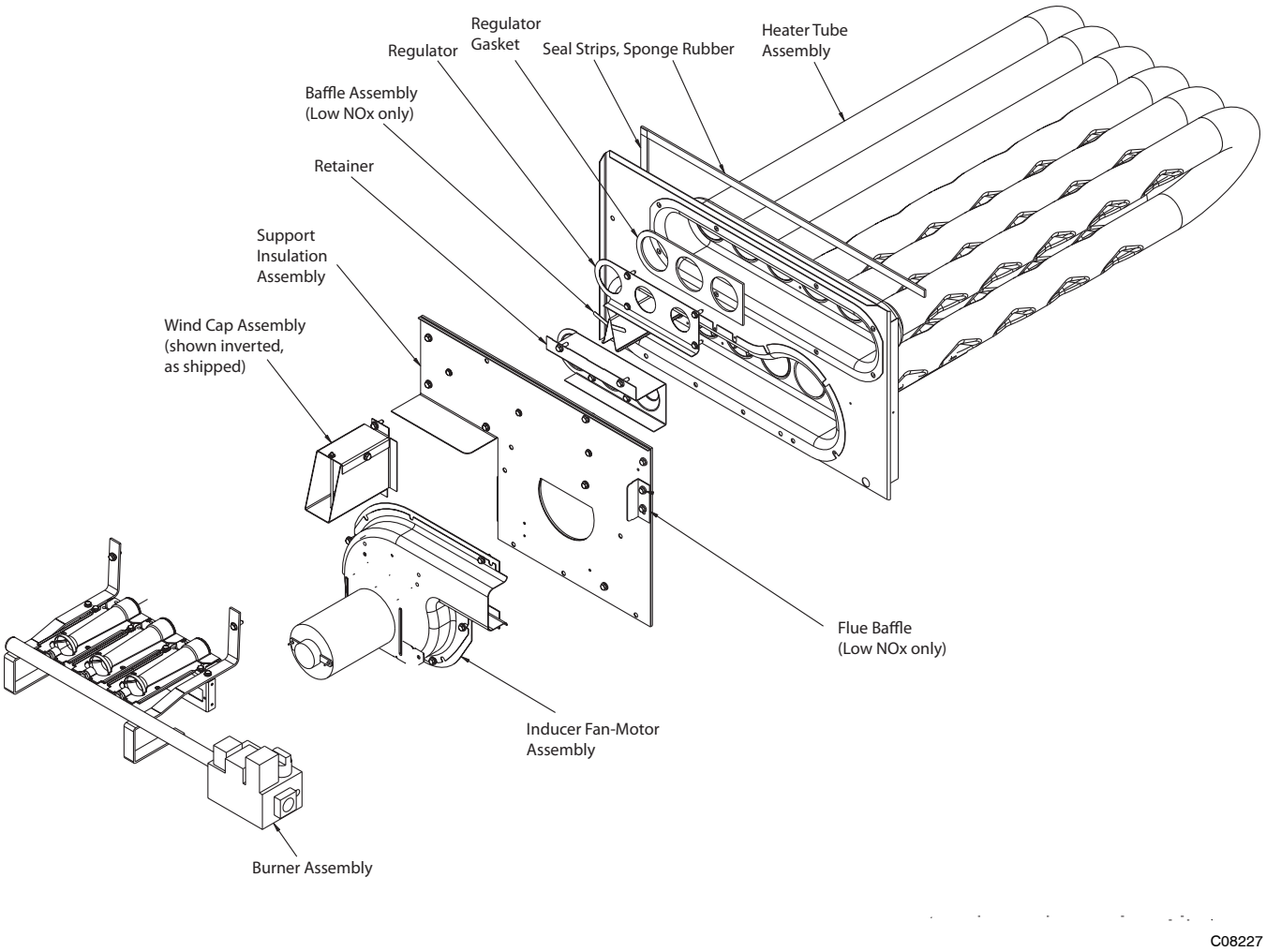

Fig. 31 - Heat Exchanger Assembly

Burners and Igniters

⚠ CAUTION

EQUIPMENT DAMAGE HAZARD

Failure to follow this caution may result in equipment damage.

When working on gas train, do not hit or plug orifice spuds.

Main Burners

To access burners, remove burner access panel and slide out burner partition. At the beginning of each heating season, inspect for deterioration or blockage due to corrosion or other causes. Observe the main burner flames and adjust, if necessary.

Orifice projection — Refer to Fig. 32 for maximum projection dimension for orifice face to manifold tube.

Removal and Replacement of Gas Train

See Figures 27, 31 and 33.

1. Shut off manual gas valve.
2. Shut off power to unit.
3. Slide out burner partition.
4. Disconnect gas piping at unit gas valve.

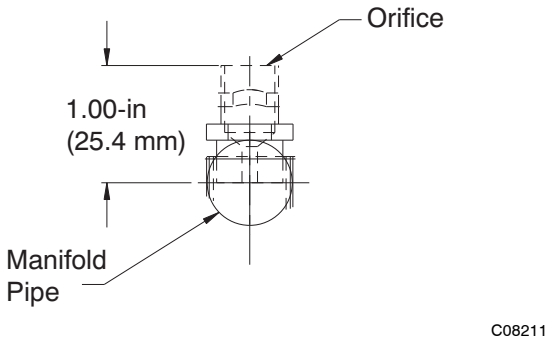

Fig. 32 - Orifice Projection

5. Remove wires connected to gas valve. Mark each wire.
6. Remove igniter wires and sensor wires at the Integrated Gas Unit Controller (IGC). (See Fig. 34.)
7. Remove the 2 screws that attach the burner rack to the vestibule plate (Fig. 31).
8. Slide the burner tray out of the unit (Fig. 33).
9. To reinstall, reverse the procedure outlined above.

Cleaning and Adjustment

1. Remove burner rack from unit as described in Removal and Replacement of Gas Train section, above.
2. Inspect burners; if dirty, remove burners from rack. (Mark each burner to identify its position before removing from the rack.)
3. Use a soft brush to clean burners and cross-over port as required.
4. Adjust spark gap. (See Fig. 35.)
5. If factory orifice has been removed, check that each orifice is tight at its threads into the manifold pipe and that orifice projection does not exceed maximum valve. See Fig. 32
6. Reinstall burners on rack in the same locations as factory-installed. (The outside crossover flame regions of the outermost burners are pinched off to prevent excessive gas flow from the side of the burner assembly. If the pinched crossovers are installed between two burners, the flame will not ignite properly.)

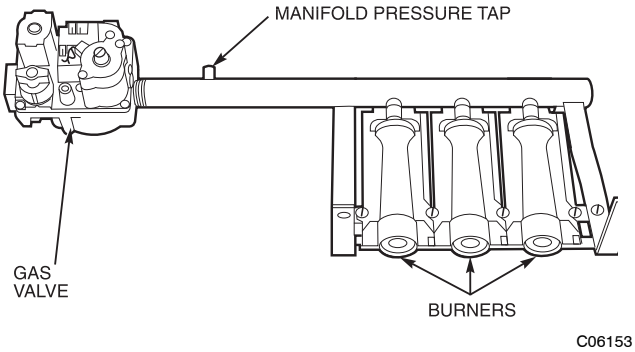

Fig. 33 - Burner Tray Details

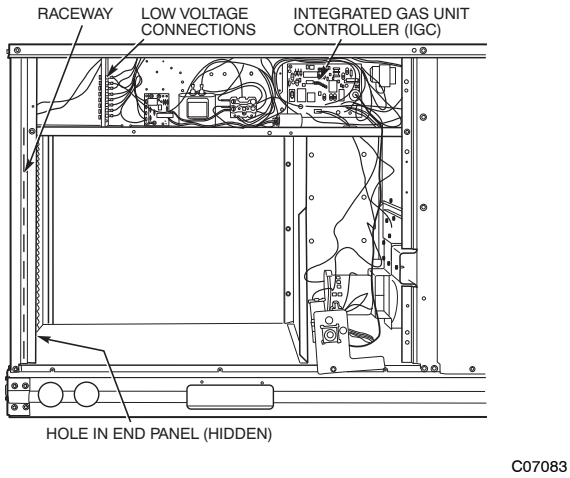

Fig. 34 - Unit Control Box/IGC Location

7. Reinstall burner rack as described in Removal and Replacement of Gas Train section, above.

Gas Valve — All three-phase models (except Low NO_x) are equipped with 2-stage gas valves. Single-phase models and all Low NO_x models are equipped with single-stage gas valves. See Fig. 36 for locations of adjustment screws and features on the gas valves.

To adjust gas valve pressure settings:

IMPORTANT: Leak check all gas connections including the main service connection, gas valve, gas spuds, and manifold pipe plug. All leaks must be repaired before firing unit.

Check Unit Operation and Make Necessary Adjustments

NOTE: Gas supply pressure at gas valve inlet must be within specified ranges for fuel type and unit size. See Tables 4 and 5.

1. Remove manifold pressure tap plug from manifold and connect pressure gauge or manometer. (See Fig. 33)
2. Turn on electrical supply.
3. Turn on unit main gas valve.
4. Set room thermostat to call for heat. If unit has two-stage gas valve, verify high-stage heat operation before attempting to adjust manifold pressure.
5. When main burners ignite, check all fittings, manifold, and orifices for leaks.
6. Adjust high-stage pressure to specified setting by turning the plastic adjustment screw clockwise to increase pressure, counter-clockwise to decrease pressure.
7. **For Two-Stage Gas Valves** set room thermostat to call for low-stage heat. Adjust low-stage pressure to specified setting.
8. Replace regulator cover screw(s) when finished.
9. With burner access panel removed, observe unit heating operation in both high stage and low stage operation if so equipped. Observe burner flames to see if they are blue in appearance, and that the flames are approximately the same for each burner.
10. Turn off unit, remove pressure manometer and replace the 1/8 in. pipe fitting on the gas manifold. (See Fig. 32).

Limit Switch

Remove blower access panel. Limit switch is located on the fan deck. See Fig. 28.

Burner Ignition

Unit is equipped with a direct spark ignition 100% lockout system. Integrated Gas Unit Controller (IGC) is located in the control box. See Fig. 34. The IGC contains a self-diagnostic LED (light-emitting diode). A single LED (see Fig. 37) on the IGC provides a visual display of operational or sequential problems when the power supply is uninterrupted. When a break in power occurs, the IGC will be reset (resulting in a loss of fault history) and the indoor (evaporator) fan ON/OFF times will be reset. The LED error code can be observed through the viewport. During servicing refer to the label on the control box cover or Table 8 for an explanation of LED error code descriptions.

If lockout occurs, unit may be reset by interrupting power supply to unit for at least 5 seconds.

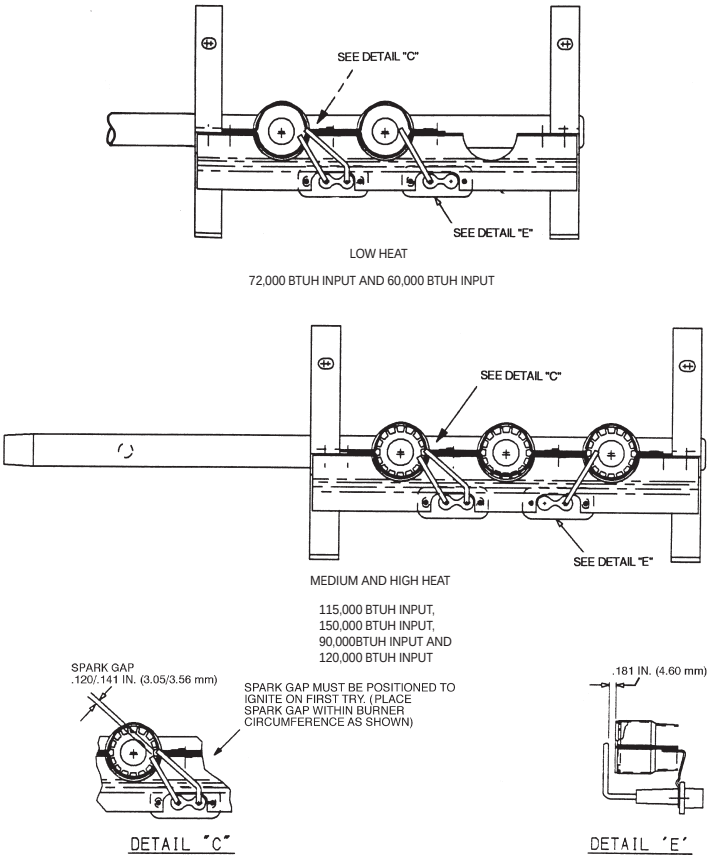

Fig. 35 - Spark Adjustment

Table 8 – LED Error Code Description*

LED INDICATION	ERROR CODE DESCRIPTION
ON	Normal Operation
OFF	Hardware Failure
1 Flash†	Evaporator Fan On/Off Delay Modified
2 Flashes	Limit Switch Fault
3 Flashes	Flame Sense Fault
4 Flashes	4 Consecutive Limit Switch Faults
5 Flashes	Ignition Lockout Fault
6 Flashes	Induced–Draft Motor Fault
7 Flashes	Rollout Switch Fault
8 Flashes	Internal Control Fault
9 Flashes	Software Lockout

LEGEND
LED – Light Emitting Diode
* . A 3–second pause exists between LED error code flashes. If more than one error code exists, all applicable codes will be displayed in numerical sequence.
† Indicates a code that is not an error. The unit will continue to operate when this code is displayed.

IMPORTANT: Refer to Troubleshooting Table 13 and 14 for additional information.

Orifice Replacement

This unit uses orifice type LH32RFnnn (where nnn indicates orifice reference size). When replacing unit orifices, order the necessary parts via Carrier RCD. See Table 10 for available orifice sizes. See Table 11 and 12 for orifice sizes for Natural Gas and LP fuel usage at various elevations above sea level.

Check that each replacement orifice is tight at its threads into the manifold pipe and that orifice projection does not exceed maximum value. See Fig. 32.

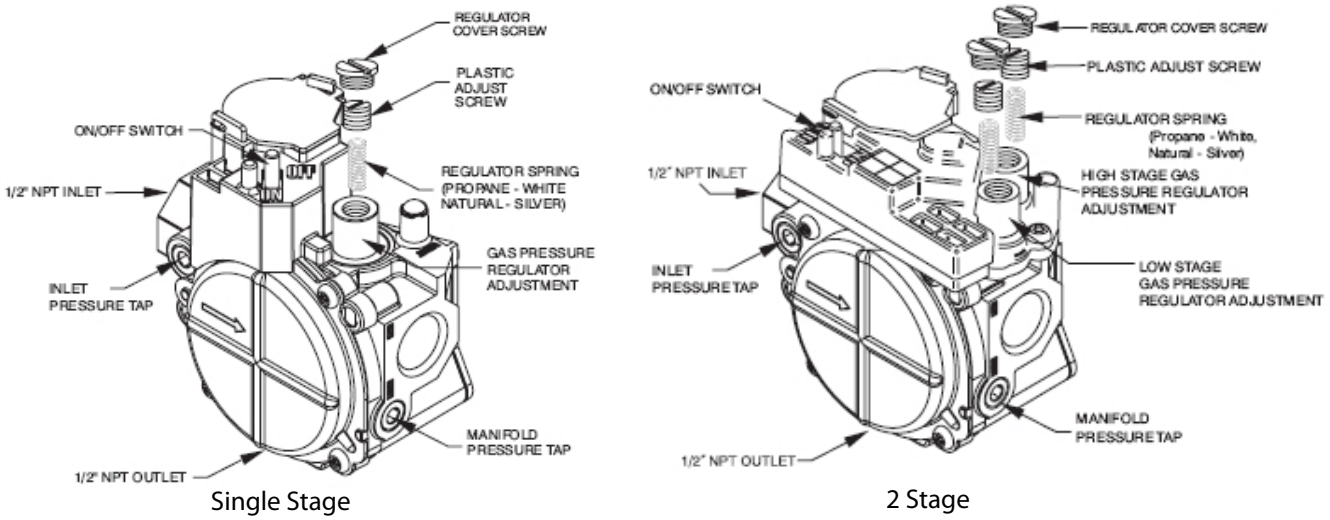

C08210

Fig. 36 - Gas Valves

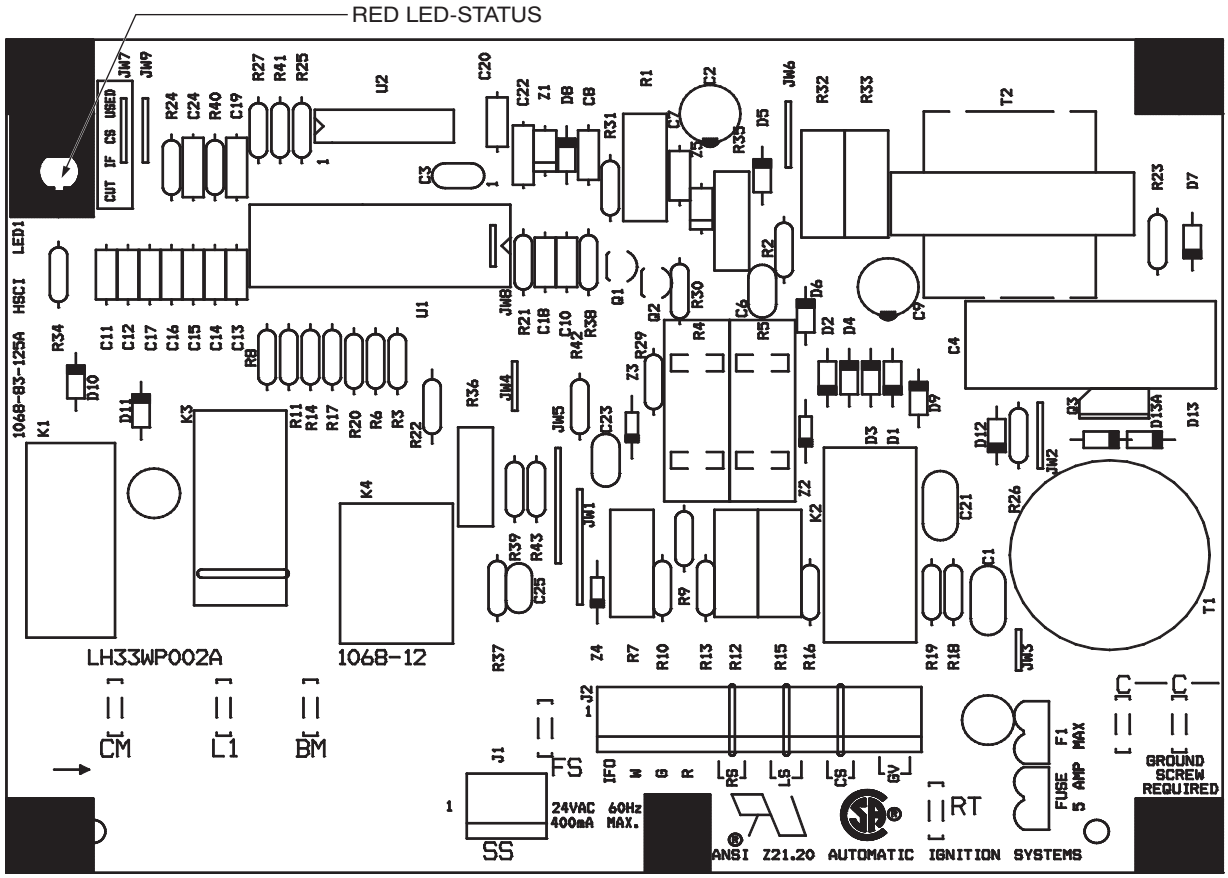

C07028

Fig. 37 - Integrated Gas Control (IGC) Board

Table 9 – IGC Connections

TERMINAL LABEL	POINT DESCRIPTION	SENSOR LOCATION	TYPE OF I/O	CONNECTION PIN NUMBER
INPUTS				
RT, C	Input power from TRAN 1	control box	24 VAC	—
SS	Speed sensor	gas section	analog input	J1, 1-3
FS, T1	Flame sensor	gas section	switch input	—
W	Heat stage 1	LCTB	24 VAC	J2, 2
RS	Rollout switch	gas section	switch input	J2, 5-6
LS	Limit switch	fan section	switch input	J2, 7-8
CS	Centrifugal switch (not used)	—	switch input	J2, 9-10
OUTPUTS				
L1, CM	Induced draft combustion motor	gas section	line VAC	
IFO	Indoor fan	control box	relay	J2, 1
GV	Gas valve (heat stage 1)	gas section	relay	J2, 11-12

Table 10 – Orifice Sizes

ORIFICE DRILL SIZE	CARRIER PART NUMBER	DRILL DIA. (in.)
#30	LH32RF129	0.1285
1/8	LH32RF125	0.1250
#31	LH32RF120	0.1200
#32	LH32RF116	0.1160
#33	LH32RF113	0.1130
#34	LH32RF111	0.1110
#35	LH32RF110	0.1100
#36	LH32RF105	0.1065
#37	LH32RF104	0.1040
#38	LH32RF102	0.1015
#39	LH32RF103	0.0995
#40	LH32RF098	0.0980
#41	LH32RF096	0.0960
#42	LH32RF094	0.0935
#43	LH32RF089	0.0890
#44	LH32RF086	0.0860
#45	LH32RF082	0.0820
#46	LH32RF080	0.0810
#47	LH32RF079	0.0785
#48	LH32RF076	0.0760
#49	LH32RF073	0.0730
#50	LH32RF070	0.0700
#51	LH32RF067	0.0670
#52	LH32RF065	0.0635
#53	LH32RF060	0.0595
#54	LH32RF055	0.0550
#55	LH32RF052	0.0520
#56	LH32RF047	0.0465
#57	LH32RF043	0.0430
#58	LH32RF042	0.0420

Table 11 – Altitude Compensation* - Small Chassis

ELEVATION ft (m)	50,000 BTUH Nominal		72,000 BTUH Nominal		115,000 BTUH Nominal		150,000 BTUH Nominal	
	NG Orifice Size	LP Orifice Size	NG Orifice Size	LP Orifice Size	NG Orifice Size	LP Orifice Size	NG Orifice Size	LP Orifice Size
0 – 2000 (610)	†43	54[4]	33[1]	51[4]	33[1]	50[3]	†30	46[3]
2000 (610)	44[2]	54[4]	35[1]	51[4]	35[1]	51[4]	†30	47[3]
3000 (914)	44[2]	55[4]	35[1]	52[4]	35[1]	51[4]	31[1]	47[3]
4000 (1219)	44[2]	55[4]	36[1]	52[4]	36[1]	51[4]	31[1]	48[3]
5000 (1524)	45[2]	55[4]	36[1]	52[4]	36[1]	51[4]	31[1]	48[3]
6000 (1829)	45[2]	55[4]	37[2]	52[4]	37[2]	52[4]	31[1]	48[3]
7000 (2134)	46[3]	55[4]	38[2]	53[4]	38[2]	52[4]	32[1]	49[3]
8000 (2438)	47[3]	†56	39[2]	53[4]	39[2]	52[4]	33[1]	49[3]
9000 (2743)	47[3]	†56	†40	53[4]	†40	53[4]	34[1]	50[3]
10000 (3048)	48[3]	†56	†41	54[4]	†41	53[4]	35[1]	50[3]
11000 (3353)	49[3]	†56	†42	54[4]	†42	53[4]	36[1]	51[4]
12000 (3658)	49[3]	†57	†43	54[4]	†43	54[4]	37[2]	51[4]
13000 (3962)	50[3]	†57	†43	55[4]	†43	54[4]	38[2]	52[4]
14000 (4267)	51[4]	†58	44[2]	†56	44[2]	55[4]	†40	53[4]

Table 12 – Altitude Compensation* - Low NO_x Units

ELEVATION ft (m)	50k BTUH Nominal		60k, 90k BTUH Nominal		120k BTUH Nominal	
	NG Orifice Size	LP Orifice Size	NG Orifice Size	LP Orifice Size	NG Orifice Size	LP Orifice Size
0 – 2000 (610)	†43	54[4]	38[2]	53[4]	32[1]	50[3]
2000 (610)	44[2]	54[4]	39[2]	54[4]	33[1]	51[4]
3000 (914)	44[2]	55[4]	†40	54[4]	34[1]	51[4]
4000 (1219)	44[2]	55[4]	†41	54[4]	35[1]	51[4]
5000 (1524)	45[2]	55[4]	†41	54[4]	35[1]	51[4]
6000 (1829)	45[2]	55[4]	†42	54[4]	36[1]	52[4]
7000 (2134)	46[3]	55[4]	†42	54[4]	36[1]	52[4]
8000 (2438)	47[3]	†56	†43	55[4]	37[2]	52[4]
9000 (2743)	47[3]	†56	†43	55[4]	38[2]	53[4]
10000 (3048)	48[3]	†56	44[2]	55[4]	†40	53[4]
11000 (3353)	49[3]	†56	44[2]	55[4]	†41	53[4]
12000 (3658)	49[3]	†57	45[2]	†56	†42	54[4]
13000 (3962)	50[3]	†57	47[3]	†56	†43	54[4]
14000 (4267)	51[4]	†58	48[3]	†56	†43	55[4]

LEGEND
NG = Natural Gas LP = Liquid Propane
* As the height above sea level increases, there is less oxygen per cubic ft. of air. Therefore, heat input rate should be reduced at higher altitudes.
† Not included in kit. May be purchased separately through dealer.

1 = CRLPELEV001A00
2 = CRLPELEV002A00
3 = CRLPELEV003A00
4 = CRLPELEV004A00

Troubleshooting Heating System

Refer to Table 13 and 14 for additional troubleshooting topics.

Table 13 – Heating Service Analysis

PROBLEM	CAUSE	REMEDY
Burners Will Not Ignite.	Misaligned spark electrodes.	Check flame ignition and sensor electrode positioning. Adjust as needed.
	No gas at main burners.	Check gas line for air, purge as necessary. After purging gas line of air, allow gas to dissipate for at least 5 minutes before attempting to relight unit.
		Check gas valve.
	Water in gas line.	Drain water and install drip leg to trap water.
	No power to furnace.	Check power supply, fuses, wiring, and circuit breaker.
	No 24 v power supply to control circuit.	Check transformer. Transformers with internal overcurrent protection require a cool down period before resetting.
	Miswired or loose connections.	Check all wiring and wire nut connections.
	Burned–out heat anticipator in thermostat.	Replace thermostat.
	Broken thermostat wires.	Run continuity check. Replace wires, if necessary.
Inadequate Heating.	Dirty air filter.	Clean or replace filter as necessary.
	Gas input to unit too low.	Check gas pressure at manifold. Clock gas meter for input. If too low, increase manifold pressure, or replace with correct orifices.
	Unit undersized for application.	Replace with proper unit or add additional unit.
	Restricted airflow.	Clean filter, replace filter, or remove any restrictions.
	Blower speed too low.	Use high speed tap, increase fan speed, or install optional blower, as suitable for individual units.
	Limit switch cycles main burners.	Check rotation of blower, thermostat heat anticipator settings, and temperature rise of unit. Adjust as needed.
	Too much outdoor air.	Adjust minimum position.
		Check economizer operation.
Poor Flame Characteristics.	Incomplete combustion (lack of combustion air) results in: Aldehyde odors, CO, sooting flame, or floating flame.	Check all screws around flue outlets and burner compartment. Tighten as necessary.
		Cracked heat exchanger.
		Overfired unit — reduce input, change orifices, or adjust gas line or manifold pressure.
		Check vent for restriction. Clean as necessary.
		Check orifice to burner alignment.
Burners Will Not Turn Off.	Unit is locked into Heating mode for a one minute minimum.	Wait until mandatory one–minute time period has elapsed or reset power to unit.

Table 14 – IGC Board LED Alarm Codes

LED FLASH CODE	DESCRIPTION	ACTION TAKEN BY CONTROL	RESET METHOD	PROBABLE CAUSE
On	Normal Operation	—	—	—
Off	Hardware Failure	No gas heating.	—	Loss of power to the IGC. Check 5 amp fuse on IGC, power to unit, 24V circuit breaker, transformer, and wiring to the IGC.
2 Flashes	Limit Switch Fault	Gas valve and igniter Off. Indoor fan and inducer On.	Limit switch closed, or heat call (W) Off.	High temperature limit switch is open. Check the operation of the indoor (evaporator) fan motor. Ensure that the supply-air temperature rise is within the range on the unit nameplate. Check wiring and limit switch operation.
3 Flashes	Flame Sense Fault	Indoor fan and inducer On.	Flame sense normal. Power reset for LED reset.	The IGC sensed a flame when the gas valve should be closed. Check wiring, flame sensor, and gas valve operation.
4 Flashes	Four Consecutive Limit Switch Fault	No gas heating.	Heat call (W) Off. Power reset for LED reset.	4 consecutive limit switch faults within a single call for heat. See Limit Switch Fault.
5 Flashes	Ignition Fault	No gas heating.	Heat call (W) Off. Power reset for LED reset.	Unit unsuccessfully attempted ignition for 15 minutes. Check igniter and flame sensor electrode spacing, gaps, etc. Check flame sense and igniter wiring. Check gas valve operation and gas supply. Check gas valve connections to IGC terminals. BRN lead must be on Pin 11.
6 Flashes	Induced Draft Motor Fault	If heat off: no gas heating. If heat on: gas valve Off and inducer On.	Inducer sense normal, or heat call (W) Off.	Inducer sense On when heat call Off, or inducer sense Off when heat call On. Check wiring, voltage, and operation of IGC motor. Check speed sensor wiring to IGC.
7 Flashes	Rollout Switch Lockout	Gas valve and igniter Off. Indoor fan and inducer On.	Power reset.	Rollout switch has opened. Check gas valve operation. Check induced-draft blower wheel is properly secured to motor shaft.
8 Flashes	Internal Control Lockout	No gas heating.	Power reset.	IGC has sensed internal hardware or software error. If fault is not cleared by resetting 24 v power, replace the IGC.
9 Flashes	Temporary Software Lockout	No gas heating.	1 hour auto reset, or power reset.	Electrical interference is disrupting the IGC software.

LEGEND
IGC – Integrated Gas Unit Control
LED – Light–Emitting Diode
NOTES:
1. There is a 3–second pause between alarm code displays.
2. If more than one alarm code exists, all applicable alarm codes will be displayed in numerical sequence.
3. Alarm codes on the IGC will be lost if power to the unit is interrupted.

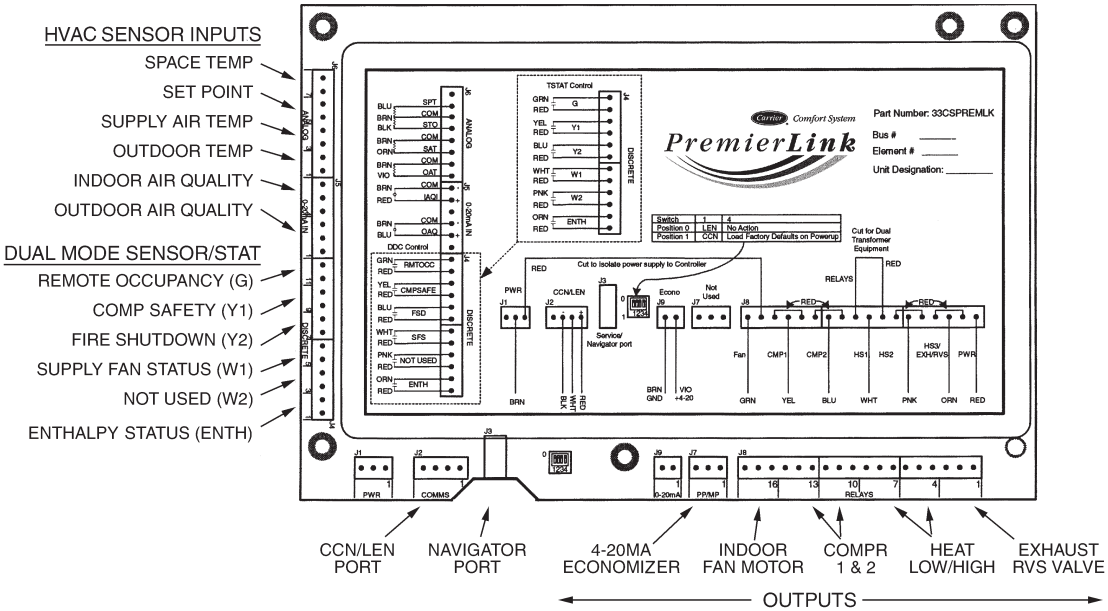

C08199

Fig. 38 - PremierLink Controller

PREMIERLINK™ CONTROL

The PremierLink controller (see Fig. 38) is compatible with Carrier Comfort Network® (CCN) devices. This control is designed to allow users the access and ability to change factory-defined settings, thus expanding the function of the standard unit control board. CCN service access tools include System Pilot (TM), Touch Pilot (TM) and Service Tool. (Standard tier display tools Navigator™ and Scrolling Marquee are not suitable for use with latest PremierLink controller (Version 2.x).)

The PremierLink control is factory-mounted in the 48TC unit's main control box to the left of the LCTB. Factory wiring is completed through harnesses connected to the LVTB. Field connections are made at a 16-pole terminal block (TB1) located on the bottom shelf of the unit control box in front of the PremierLink controller The factory-installed PremierLink control includes the supply-air temperature (SAT) sensor. The outdoor air temperature (OAT) sensor is included in the FIOP/accessory Economizer 2 package.

Refer to Fig. 38 for PremierLink connection locations.

NOTE: Refer to Form 33CS-58SI for complete PremierLink configuration, operating sequences and troubleshooting information. Have a copy of this manual available at unit start-up.

The PremierLink controller requires the use of a Carrier electronic thermostat or a CCN connection for time broadcast to initiate its internal timeclock. This is necessary for broadcast of time of day functions (occupied/unoccupied).

NOTE: PremierLink controller is shipped in Sensor mode. To be used with a thermostat, the PremierLink controller must be configured to Thermostat mode. Refer to PremierLink Configuration instructions for Operating Mode.

Supply Air Temperature (SAT) Sensor — On FIOP-equipped 48TC unit, the unit is supplied with a supply-air temperature (SAT) sensor (33ZCSENSAT). This sensor is a tubular probe type, approx 6-inches (12.7 mm) in length. It is a nominal 10-k ohm thermistor. See Table 15 for temperature-resistance characteristic.

The SAT is factory-wired. The SAT probe is wire-tied to the supply-air opening (on the horizontal opening end) in its shipping position. Remove the sensor for installation. Re-position the sensor in the flange of the supply-air opening or in the supply air duct (as required by local codes). Drill or punch a 1/2-in. hole in the flange or duct. Use two field-supplied, self-drilling screws to secure the sensor probe in a horizontal orientation. See Fig. 39.

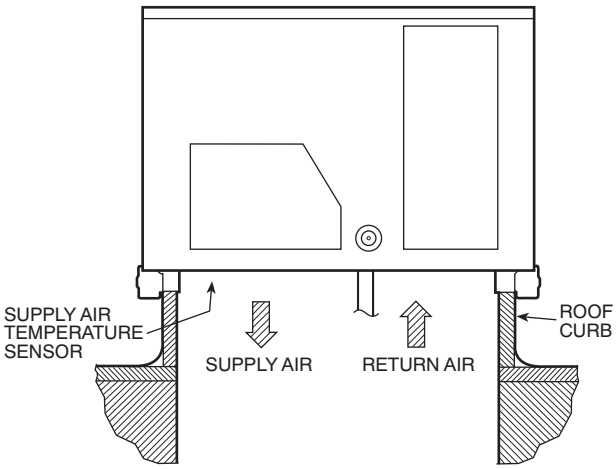

C08200

Fig. 39 - Typical Mounting Location for Supply Air Temperature (SAT) Sensor on Small Rooftop Units

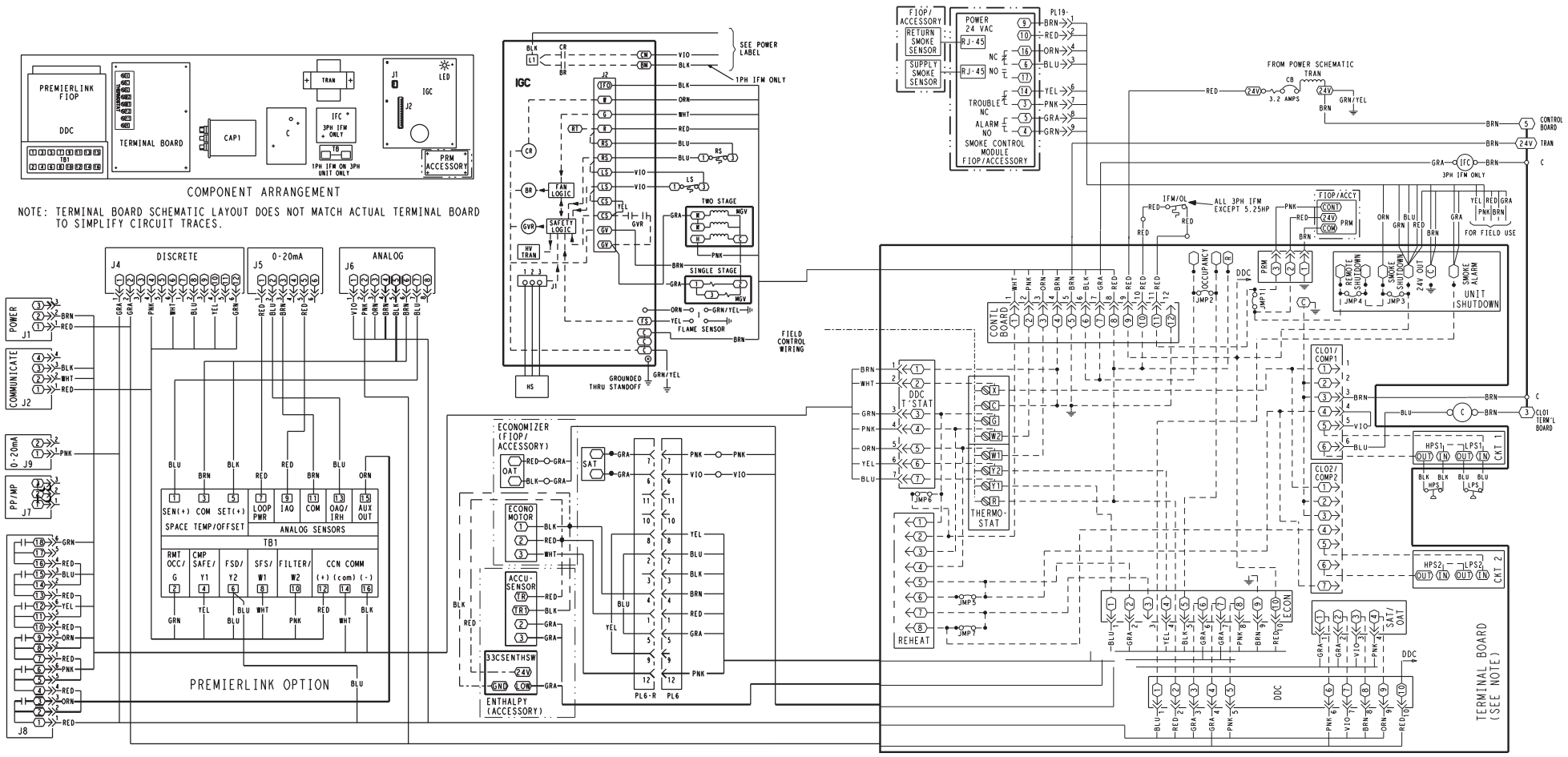

C08248

Fig. 40 - PremierLink Wiring Schematic

Table 15 – Thermistor Resistance vs Temperature Values for Space Temperature Sensor, Supply Air Temperature Sensor, and Outdoor Air Temperature Sensor

TEMP (C)	TEMP (F)	RESISTANCE (Ohms)
–40	–40	335,651
–35	–31	242,195
–30	–22	176,683
–25	–13	130,243
–20	–4	96,974
–15	5	72,895
–10	14	55,298
–5	23	42,315
0	32	32,651
5	41	25,395
10	50	19,903
15	59	15,714
20	68	12,494
25	77	10,000
30	86	8,056
35	95	6,530
40	104	5,325
45	113	4,367
50	122	3,601
55	131	2,985
60	140	2,487
65	149	2,082
70	158	1,752

NOTE: The sensor must be mounted in the discharge airstream downstream of the cooling coil and any heating devices. Be sure the probe tip does not come in contact with any of the unit's heater surfaces.

Outdoor Air Temperature (OAT) Sensor — The OAT is factory-mounted in the Economizer 2 (FIOP or accessory). It is a nominal 10k ohm thermistor attached to an eyelet mounting ring. See Table 15 for temperature-resistance characteristic.

Economizer 2 — The PremierLink control is used with Economizer 2 (option or accessory) for outdoor air management. The damper position is controlled directly by the PremierLink control; Economizer 2 has no internal logic device.

Outdoor air management functions can be enhanced with field-installation of these accessory control devices:

Enthalpy control (outdoor air or differential sensors)

Space CO2 sensor

Outdoor air CO2 sensor

Refer to Table 16 for accessory part numbers

Field connections — Field connections for accessory sensor and input devices are made at the 16-pole terminal block (TB1) located on the control box bottom shelf in front of the PremierLink control. Some input devices also require a 24-vac signal source; connect at LCTB terminal R at "THERMOSTAT" connection strip for this signal source. See connections figures on following pages for field connection locations (and for continued connections at the PremierLink board inputs).

Table 17 provides a summary of field connections for units equipped with Space Sensor. Table 18 provides a summary of field connections for units equipped with Space Thermostat.

Space Sensors - The PremierLink controller is factory-shipped configured for Space Sensor Mode. A Carrier T-55 or T-56 space sensor must be used. T-55 space temperature sensor provides a signal of space temperature to the PremierLink control T-56 provides same space temperature signal plus it allows for adjustment of space temperature setpoints from the face of the sensor by the occupants. See Table 15 for temperature versus resistance characteristic on the space sensors.

Connect T-55 - See Fig. 41 for typical T-55 internal connections. Connect the T-55 SEN terminals to TB1 terminals 1 and 3 (see Fig. 42).

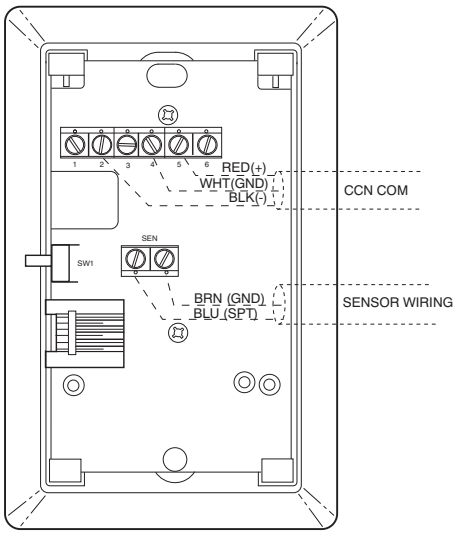

C08201

Fig. 41 - T-55 Space Temperature Sensor Wiring

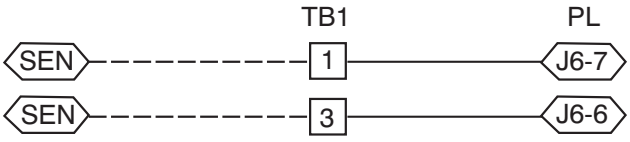

C08212

Fig. 42 - PremierLink T55 Sensor

Table 16 – PremierLink Sensor Usage

APPLICATION	OUTDOOR AIR TEMPERATURE SENSOR	RETURN AIR TEMPERATURE SENSOR	OUTDOOR AIR ENTHALPY SENSOR	RETURN AIR ENTHALPY SENSOR
Differential Dry Bulb Temperature with PremierLink (PremierLink requires 4–20 mA Actuator)	Included – CRTEMPSN001A00	Required – 33ZCT55SPT or equivalent	–	–
Single Enthalpy with PremierLink (PremierLink requires 4–20mA Actuator)	Included – Not Used	–	Requires – HH57AC077 or equivalent	–
Differential Enthalpy with PremierLink (PremierLink requires 4–20mA Actuator)	Included – Not Used	–	Requires – HH57AC077 or equivalent	Requires – HH57AC078 or equivalent

NOTES:
CO2 Sensors (Optional):
33ZCSENCO2 – Room sensor (adjustable). Aspirator box is required for duct mounting of the sensor.
33ZCASPC02 – Aspirator box used for duct–mounted CO2 room sensor.
33ZCT55CO2 – Space temperature and CO2 room sensor with override.
33ZCT56C02 – Space temperature and CO2 room sensor with override and setpoint.

Table 17 – Space Sensor Mode

TB1 TERMINAL	FIELD CONNECTION	INPUT SIGNAL
1	T55–SEN/T56–SEN	Analog (10k thermistor)
2	RMTOCC	Discrete, 24VAC
3	T55–SEN/T56–SEN	Analog (10k thermistor)
4	CMPSAFE	Discrete, 24VAC
5	T56–SET	Analog (10k thermistor)
6	FSD	Discrete, 24VAC
7	LOOP–PWR	Analog, 24VDC
8	SPS	Discrete, 24VAC
9	IAQ–SEN	Analog, 4–20mA
10	FILTER	Discrete, 24VAC
11	IAQ–COM/OAQ–COM/RH–COM	Analog, 4–20mA
12	CCN + (RED)	Digital, , 5VDC
13	OAQ–SEN/RH–SEN	Analog, 4–20mA
14	CCN Gnd (WHT)	Digital, 5VDC
15	AUX OUT(Power Exhaust)	(Output)Discrete 24VAC
16	CCN – (BLK)	Digital, 5VDC

LEGEND:

T55 – Space Temperature Sensor
T56 – Space Temperature Sensor
CCN – Carrier Comfort Network (communication bus)
CMPSAFE – Compressor Safety
FILTER – Dirty Filter Switch
FSD – Fire Shutdown
IAQ – Indoor Air Quality (CO2)
OAQ – Outdoor Air Quality (CO2)
RH – Relative Humidity
SFS – Supply Fan Status

Table 18 – Thermostat Mode

TB1 TERMINAL	FIELD CONNECTION	INPUT SIGNAL
1	RAT SEN	Analog (10k thermistor)
2	G	Discrete, 24VAC
3	RAT SEN	Analog (10k thermistor)
4	Y1	Discrete, 24VAC
5		
6	Y2	Discrete, 24VAC
7	LOOP–PWR	Analog, 24VDC
8	W1	Discrete, 24VAC
9	IAQ–SEN	Analog, 4–20mA
10	W2	Discrete, 24VAC
11	IAQ–COM/OAQ–COM/RH–COM	Analog, 4–20mA
12	CCN + (RED)	Digital, 5VDC
13	OAQ–SEN/RH–SEN	Analog, 4–20mA
14	CCN Gnd (WHT)	Digital, 5VDC
15	AUX OUT (Power Exhaust)	(Output) Discrete 24VAC
16	CCN – (BLK)	Digital, 5VDC

LEGEND:

CCN – Carrier Comfort Network (communication bus)
G – Thermostat Fan
IAQ – Indoor Air Quality (CO2)
OAQ – Outdoor Air Quality (CO2)
RAT – Return Air Temperature
RH – Relative Humidity
W1 – Thermostat Heat Stage 1
W2 – Thermostat Heat Stage 2
Y1 – Thermostat Cool Stage 1
Y2 – Thermostat Cool Stage 2

Connect T-56 - See Fig. 43 for T-56 internal connections. Install a jumper between SEN and SET terminals as illustrated. Connect T-56 terminals to TB1 terminals 1, 3 and 5 (see Fig. 44).

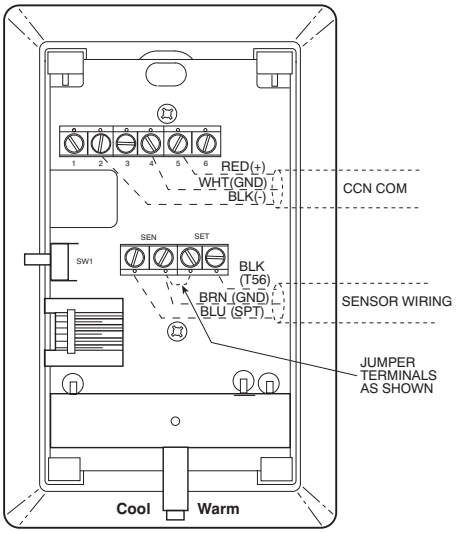

C08202

Fig. 43 - T-56 Internal Connections

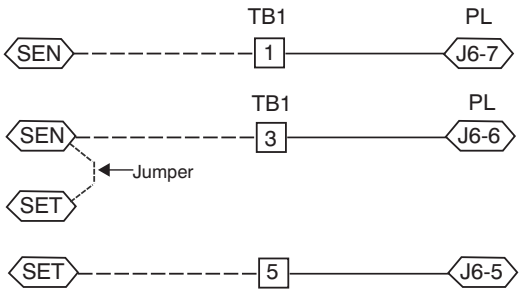

C08213

Fig. 44 - PremierLink T56 Sensor

Connect Thermostat — A 7-wire thermostat connection requires a 24-v power source and a common connection. Use the R and C terminals on the LCTB's THERMOSTAT connection strip for these. Connect the thermostat's Y1, Y2, W1, W2 and G terminals to PremierLink TB1 as shown in Fig. 45.

If the 48TC unit has an economizer system and free-cooling operation is required, a sensor representing Return Air Temperature must also be connected (field-supplied and installed). This sensor may be a T-55 Space Sensor (see Fig. 41) installed in the space or in the return duct, or it may be sensor PNO 33ZCSENSAT, installed in the return duct. Connect this sensor to TB1-1 and TB1-3 per Fig. 42. Temperature-resistance characteristic is found in Table 15.

Configure the unit for Thermostat Mode — Connect to the CCN bus using a CCN service tool and navigate to PremierLink Configuration screen for Operating Mode. Default setting is Sensor Mode (value 1). Change the value to 0 to reconfigure the controller for Thermostat Mode.

When the PremierLink is configured for Thermostat Mode, these functions are not available: Fire Shutdown (FSD), Remote Occupied (RMTOCC), Compressor Safety (CMPSAFE), Supply Fan Status (SFS), and Filter Pressure Switch (FILTER).

Economizer controls —

Outdoor Air Enthalpy Control (PNO HH57AC077) -

The enthalpy control (HH57AC077) is available as a field-installed accessory to be used with the EconoMi$er2 damper system. The outdoor air enthalpy sensor is part of the enthalpy control. (The separate field-installed accessory return air enthalpy sensor (HH57AC078) is required for differential enthalpy control. See below.)

Locate the enthalpy control in the economizer hood. Locate two GRA leads in the factory harness and connect these leads to enthalpy control sensors 2 and 3. See Fig. 46. Connect the enthalpy control power input terminals to economizer actuator power leads RED (connect to TR) and BLK (connect to TR).

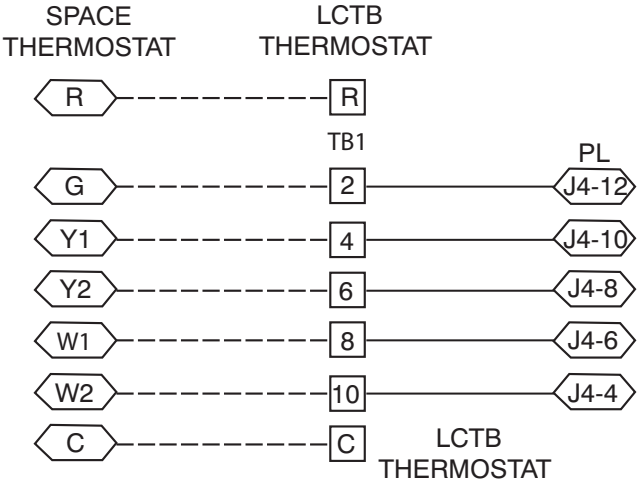

C08119

Fig. 45 - Space Thermostat Connections

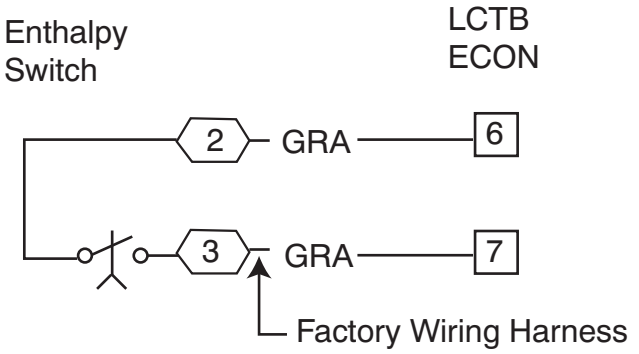

C08218

Fig. 46 - Enthalpy Switch (HH57AC077) Connections

The outdoor enthalpy changeover setpoint is set at the enthalpy controller.

The enthalpy control receives the outdoor air enthalpy from the outdoor air enthalpy sensor and provides a dry contact switch input to the PremierLink controller. A closed contact indicates that outside air is preferred to the return air. An open contact indicates that the economizer should remain at minimum position.

Differential Enthalpy Control — Differential enthalpy control is provided by sensing and comparing the outside air and return air enthalpy conditions. Install the outdoor air enthalpy control as described above. Add and install a return air enthalpy sensor.

Return Air Enthalpy Sensor — Mount the return-air enthalpy sensor (HH57AC078) in the return-air duct. The return air sensor is wired to the enthalpy controller (HH57AC077). See Fig. 47.

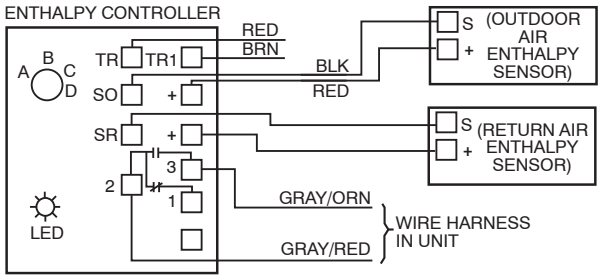

NOTES:
1. Remove factory-installed jumper across SR and + before connecting wires from return air sensor.
2. Switches shown in high outdoor air enthalpy state. Terminals 2 and 3 close on low outdoor air enthalpy relative to indoor air enthalpy.
3. Remove sensor mounted on back of control and locate in outside air-stream.

C06019

Fig. 47 - Outside and Return Air Enthalpy Sensor Wiring

To wire the return air enthalpy sensor, perform the following:

1. Use a 2-conductor, 18 or 20 AWG, twisted pair cable to connect the return air enthalpy sensor to the enthalpy controller.
2. At the enthalpy control remove the factory-installed resistor from the (SR) and (+) terminals.
3. Connect the field-supplied RED wire to (+) spade connector on the return air enthalpy sensor and the (SR+) terminal on the enthalpy controller. Connect the BLK wire to (S) spade connector on the return air enthalpy sensor and the (SR) terminal on the enthalpy controller.

NOTE: The enthalpy control must be set to the "D" setting for differential enthalpy control to work properly.

The enthalpy control receives the indoor and return enthalpy from the outdoor and return air enthalpy sensors and provides a dry contact switch input to the PremierLink controller. A closed contact indicates that outside air is preferred to the return air. An open contact indicates that the economizer should remain at minimum position.

Indoor Air Quality (CO2 sensor) — The indoor air quality sensor accessory monitors space carbon dioxide (CO2) levels. This information is used to monitor IAQ levels. Several types of sensors are available, for wall mounting in the space or in return duct, with and without LCD display, and in combination with space temperature sensors. Sensors use infrared technology to measure the levels of CO2 present in the space air.

The CO2 sensors are all factory set for a range of 0 to 2000 ppm and a linear mA output of 4 to 20. Refer to the instructions supplied with the CO2 sensor for electrical requirements and terminal locations. See Fig. 48 for typical CO2 sensor wiring schematic.

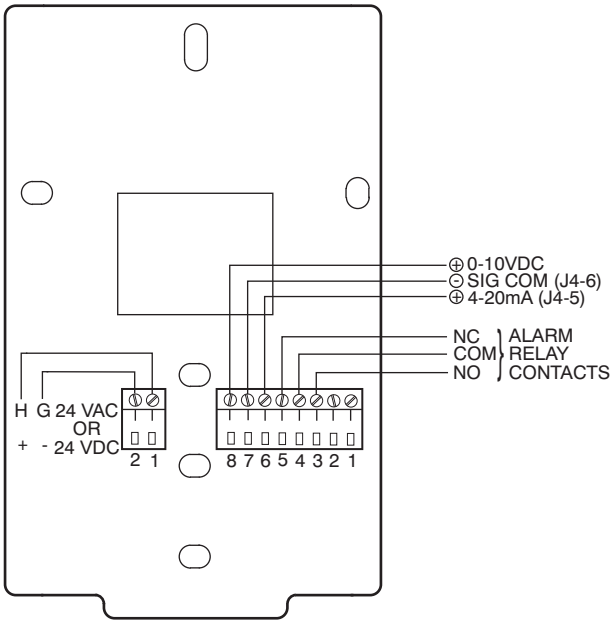

C07134

Fig. 48 - Indoor/Outdoor Air Quality (CO2) Sensor (33ZCSENCO2) - Typical Wiring Diagram

To accurately monitor the quality of the air in the conditioned air space, locate the sensor near a return-air grille (if present) so it senses the concentration of CO2 leaving the space. The sensor should be mounted in a location to avoid direct breath contact.

Do not mount the IAQ sensor in drafty areas such as near supply ducts, open windows, fans, or over heat sources. Allow at least 3 ft (0.9 m) between the sensor and any corner. Avoid mounting the sensor where it is influenced by the supply air; the sensor gives inaccurate readings if the supply air is blown directly onto the sensor or if the supply air does not have a chance to mix with the room air before it is drawn into the return airstream.

Wiring the Indoor Air Quality Sensor —

For each sensor, use two 2-conductor 18 AWG (American Wire Gage) twisted-pair cables (unshielded) to connect the separate isolated 24 vac power source to the sensor and to connect the sensor to the control board terminals.

To connect the sensor to the control, identify the positive (4 to 20 mA) and ground (SIG COM) terminals on the sensor. See Fig. 48. Connect the 4-20 mA terminal to terminal TB1-9 and connect the SIG COM terminal to terminal TB1-7. See Fig. 49.

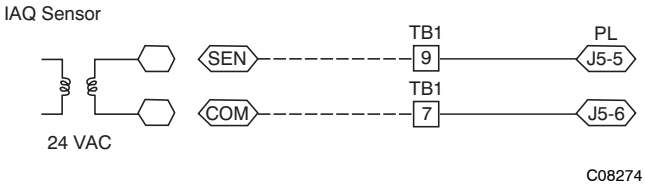

Fig. 49 - Indoor CO2 Sensor (33ZCSENCO2) Connections

Refer to Form 33CS-58SI, PremierLink Installation, Start-up, and Configuration Instructions, for detailed configuration information

Outdoor Air Quality Sensor (PNO 33ZCSENCO2 plus weatherproof enclosure) — The outdoor air CO2 sensor is designed to monitor carbon dioxide (CO2) levels in the outside ventilation air and interface with the ventilation damper in an HVAC system. The OAQ sensor is packaged with an outdoor cover. See Fig. 50. The outdoor air CO2 sensor must be located in the economizer outside air hood.

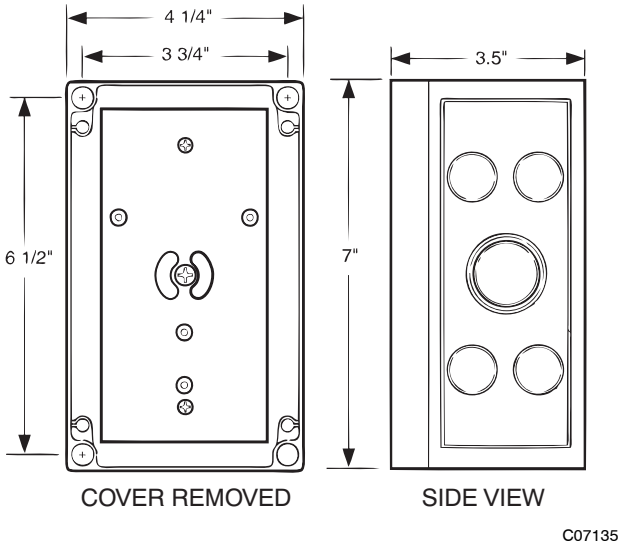

Fig. 50 - Outdoor Air Quality Sensor Cover

Wiring the Outdoor Air CO2 Sensor — A dedicated power supply is required for this sensor. A two-wire cable is required to wire the dedicated power supply for the sensor. The two wires should be connected to the power supply and terminals 1 and 2.

To connect the sensor to the control, identify the positive (4 to 20 mA) and ground (SIG COM) terminals on the OAQ sensor. See Fig. 48. Connect the 4 to 20 mA terminal to 48TC's terminal TB1-11. Connect the SIG COM terminal to 48TC's terminal TB1-13. See Fig. 51.

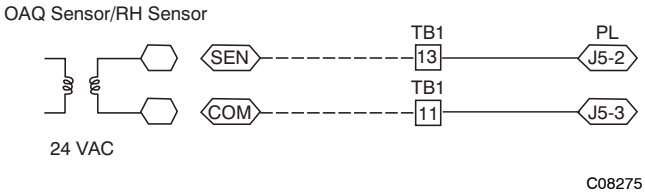

Fig. 51 - Outdoor CO2 Sensor Connections

Refer to Form 33CS-58SI, PremierLink Installation, Start-up, and Configuration Instructions, for detailed configuration information.

Smoke Detector/Fire Shutdown (FSD) — This function is available only when PremierLink is configured for (Space) Sensor Mode. The unit is factory-wired for PremierLink FSD operation when PremierLink is factory-installed.

On 48TC units equipped with factory-installed Smoke Detector(s), the smoke detector controller implements the unit shutdown through its NC contact set connected to the unit's LCTB input. The FSD function is initiated via the smoke detector's Alarm NO contact set. The PremierLink communicates the smoke detector's tripped status to the CCN building control. See Fig. 23 for unit smoke detector wiring.

Alarm state is reset when the smoke detector alarm condition is cleared and reset at the smoke detector in the unit.

Filter Status Switch — This function is available only when PremierLink is configured for (Space) Sensor Mode.

PremierLink control can monitor return filter status in two ways: By monitoring a field-supplied/installed filter pressure switch or via supply fan runtime hours.

Using switch input: Install the dirty filter pressure switch according to switch manufacturer's instructions, to measure pressure drop across the unit's return filters. Connect one side of the switch's NO contact set to LCTB's THERMOSTAT-R terminal. Connect the other side of the NO contact set to TB1-10. Setpoint for Dirty Filter is set at the switch. See Fig. 52.

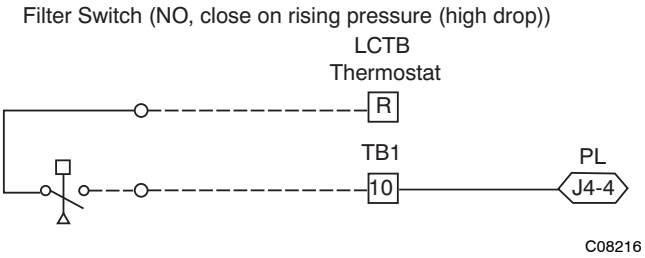

Fig. 52 - PremierLink Filter Switch Connection

When the filter switch's NO contact set closes as filter pressure drop increases (indicating dirt-laden filters), the input signal to PremierLink causes the filter status point to read "DIRTY".

Using Filter Timer Hours: Refer to Form 33CS-58SI for instructions on using the PremierLink Configuration screens and on unit alarm sequence.

Supply Fan Status Switch — The PremierLink control can monitor supply fan operation through a field-supplied/installed differential pressure switch. This sequence will prevent (or interrupt) operation of unit cooling, heating and economizer functions until the pressure switch contacts are closed indicating proper supply fan operation.

Install the differential pressure switch in the supply fan section according to switch manufacturer's instructions. Arrange the switch contact to be open on no flow and to close as pressure rises indicating fan operation.

Connect one side of the switch's NO contact set to LCTB's THERMOSTAT-R terminal. Connect the other side of the NO contact set to TB1-8. Setpoint for Supply Fan Status is set at the switch. See Fig. 53

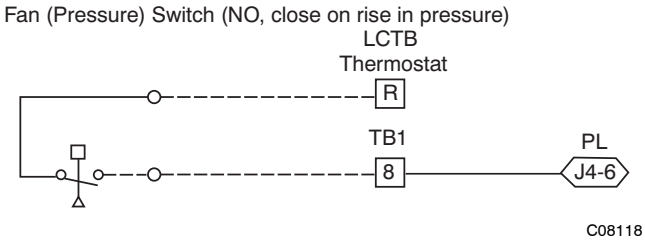

Fig. 53 - PremierLink Wiring Fan Pressure Switch Connection

Remote Occupied Switch — The PremierLink control permits a remote timeclock to override the control's on-board occupancy schedule and place the unit into Occupied mode. This function may also provide a "Door Switch" time delay function that will terminate cooling and heating functions after a 2-20 minute delay.

Connect one side of the NO contact set on the timeclock to LCTB's THERMOSTAT-R terminal. Connect the other side of the timeclock contact to the unit's TB1-2 terminal.

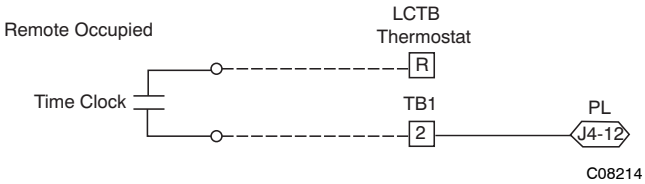

Fig. 54 - PremierLink Wiring Remote Occupied

Refer to Form 33CS-58SI for additional information on configuring the PremierLink control for Door Switch timer function.

Power Exhaust (output) - Connect the accessory Power Exhaust contactor coils(s) per Fig. 55.

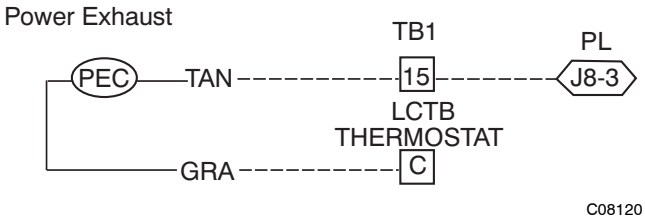

Fig. 55 - PremierLink Power Exhaust Output Connection

Space Relative Humidity Sensor — The RH sensor is not used with 48TC models at this time.

CCN Communication Bus — The PremierLink controller connects to the bus in a daisy chain arrangement. Negative pins on each component must be connected to respective negative pins, and likewise, positive pins on each component must be connected to respective positive pins. The controller signal pins must be wired to the signal ground pins. Wiring connections for CCN must be made at the 3-pin plug.

At any baud (9600, 19200, 38400 baud), the number of controllers is limited to 239 devices maximum. Bus length may not exceed 4000 ft, with no more than 60 total devices on any 1000-ft section. Optically isolated RS-485 repeaters are required every 1000 ft.

NOTE: Carrier device default is 9600 band.

COMMUNICATION BUS WIRE SPECIFICATIONS — The CCN Communication Bus wiring is field-supplied and field-installed. It consists of shielded 3-conductor cable with drain (ground) wire. The cable selected must be identical to the CCN Communication Bus wire used for the entire network.

See Table 19 for recommended cable.

Table 19 – Recommended Cables

MANUFACTURER	CABLE PART NO.
Alpha	2413 or 5463
American	A22503
Belden	8772
Columbia	02525

NOTE: Conductors and drain wire must be at least 20 AWG, stranded, and tinned copper. Individual conductors must be insulated with PVC, PVC/nylon, vinyl, Teflon, or polyethylene. An aluminum/polyester 100% foil shield and an outer jacket of PVC, PVC/nylon, chrome vinyl, or Teflon with a minimum operating temperature range of -20 C to 60 C is required. Do not run communication wire in the same conduit as or next to any AC voltage wiring.

The communication bus shields must be tied together at each system element. If the communication bus is entirely within one building, the resulting continuous shield must be connected to ground at only one single point. If the communication bus cable exits from one building and enters another building, the shields must be connected to the grounds at a lightning suppressor in each building (one point only).

Connecting CCN bus:

NOTE: When connecting the communication bus cable, a color code system for the entire network is recommended to simplify installation and checkout. See Table 20 for the recommended color code.

Table 20 – Color Code Recommendations

SIGNAL TYPE	CCN BUS WIRE COLOR	CCN PLUG PIN NUMBER
+	Red	1
Ground	White	2
–	Black	3

Connect the CCN (+) lead (typically RED) to the unit's TB1-12 terminal. Connect the CCN (ground) lead (typically WHT) to the unit's TB1-14 terminal. Connect the CCN (-) lead (typically BLK) to the unit's TB1-16 terminal. See Fig. 56.

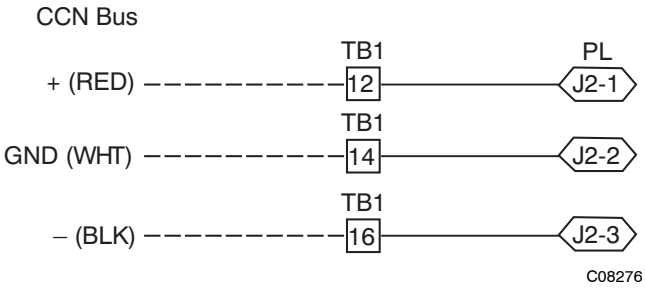

Fig. 56 - PremierLink CCN Bus Connections

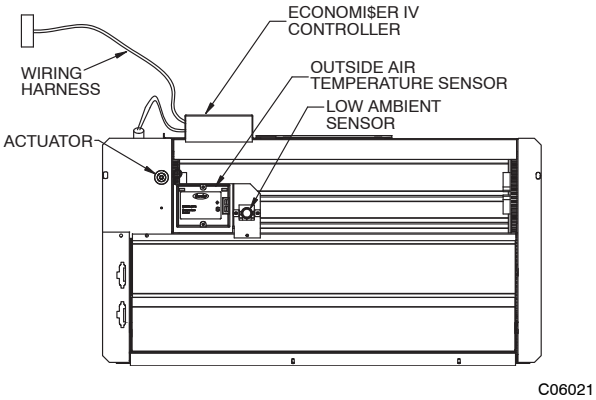

Fig. 57 - EconoMi$er IV Component Locations

ECONOMIZER SYSTEMS

The 48TC units may be equipped with a factory-installed or accessory (field-installed) economizer system. Two types are available: with a logic control system (EconoMi$er IV) and without a control system (EconoMi$er2, for use with external control systems such as PremierLink). See Fig 57 and 58 for component locations on each type. See Fig. 59 and 60 for economizer section wiring diagrams.

Both economizers use direct-drive damper actuators.

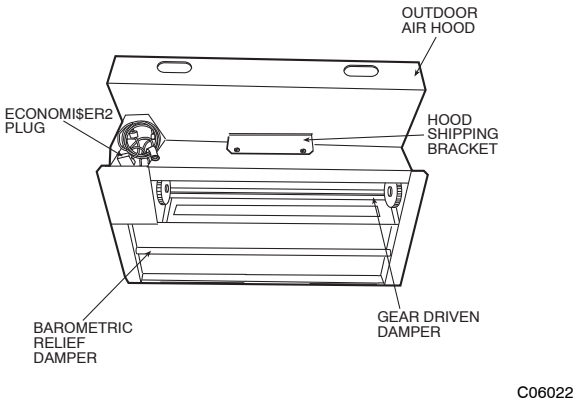

Fig. 58 - EconoMi$er2 Component Locations

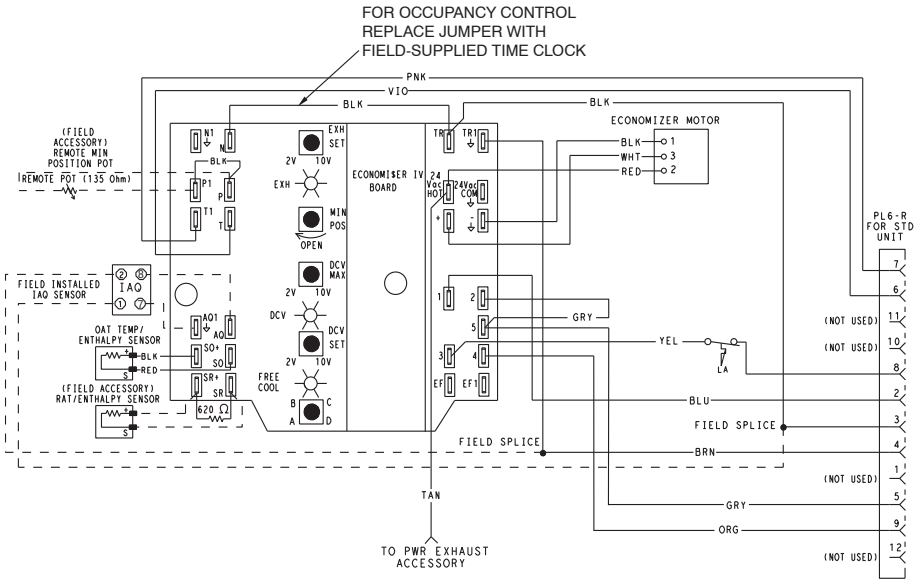

LEGEND
DCV— Demand Controlled Ventilation
IAQ — Indoor Air Quality
LA — Low Ambient Lockout Device
OAT — Outdoor-Air Temperature
POT — Potentiometer
RAT — Return-Air Temperature

Potentiometer Defaults Settings:

Power Exhaust	Middle
Minimum Pos.	Fully Closed
DCV Max.	Middle
DCV Set	Middle
Enthalpy	C Setting

NOTES:
1. 620 ohm, 1 watt 5% resistor should be removed only when using differential enthalpy or dry bulb.
2. If a separate field-supplied 24 v transformer is used for the IAQ sensor power supply, it cannot have the secondary of the transformer grounded.
3. For field-installed remote minimum position POT, remove black wire jumper between P and P1 and set control minimum position POT to the minimum position.

C06028

Fig. 59 - EconoMi$er IV Wiring

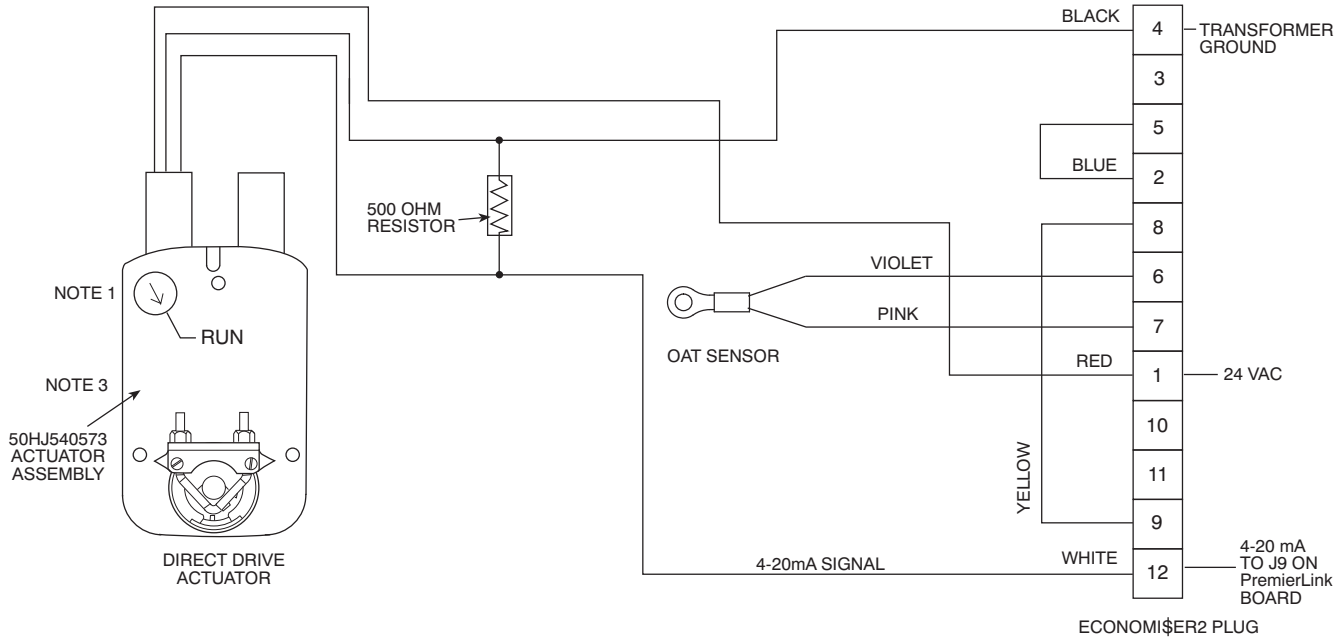

NOTES:
1. Switch on actuator must be in run position for economizer to operate.
2. PremierLink™ control requires that the standard 50HJ540569 outside-air sensor be replaced by either the CROASENR001A00 dry bulb sen sor or HH57A077 enthalpy sensor.
3. 50HJ540573 actuator consists of the 50HJ540567 actuator and a harness with 500-ohm resistor.

C08310

Fig. 60 - EconoMi$er2 with 4 to 20 mA Control Wiring

48TC

Table 21 – EconoMi$er IV Input/Output Logic

INPUTS					OUTPUTS			
Demand Control Ventilation (DCV)	Enthalpy*		Y1	Y2	Compressor		N Terminal†	
	Outdoor	Return			Stage 1	Stage 2	Occupied	Unoccupied
							Damper	
Below set (DCV LED Off)	High (Free Cooling LED Off)	Low	On	On	On	On	Minimum position	Closed
			On	Off	On	Off		
			Off	Off	Off	Off		
	Low (Free Cooling LED On)	High	On	On	On	Off	Modulating** (between min. position and full-open)	Modulating** (between closed and full-open)
			On	Off	Off	Off		
			Off	Off	Off	Off	Minimum position	Closed
Above set (DCV LED On)	High (Free Cooling LED Off)	Low	On	On	On	On	Modulating†† (between min. position and DCV maximum)	Modulating†† (between closed and DCV maximum)
			On	Off	On	Off		
			Off	Off	Off	Off		
	Low (Free Cooling LED On)	High	On	On	On	Off	Modulating***	Modulating†††
			On	Off	Off	Off		
			Off	Off	Off	Off		

* For single enthalpy control, the module compares outdoor enthalpy to the ABCD setpoint.
† Power at N terminal determines Occupied/Unoccupied setting: 24 vac (Occupied), no power (Unoccupied).
** Modulation is based on the supply-air sensor signal.
†† Modulation is based on the DCV signal.
*** Modulation is based on the greater of DCV and supply-air sensor signals, between minimum position and either maximum position (DCV) or fully open (supply-air signal).
††† Modulation is based on the greater of DCV and supply-air sensor signals, between closed and either maximum position (DCV) or fully open (supply-air signal).

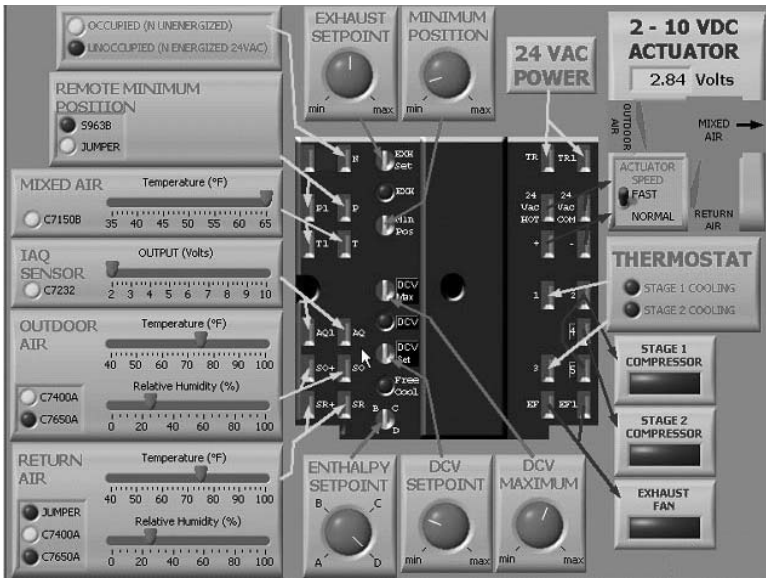

C06053

Fig. 61 - EconoMi$er IV Functional View

EconoMi$er IV

Table 21 provides a summary of Economizer IV. Troubleshooting instructions are enclosed.

A functional view of the EconoMi$er is shown in Fig. 61. Typical settings, sensor ranges, and jumper positions are also shown. An EconoMi$er IV simulator program is available from Carrier to help with EconoMi$er IV training and troubleshooting.

EconoMi$er IV Standard Sensors

Outdoor Air Temperature (OAT) Sensor

The outdoor air temperature sensor (HH57AC074) is a 10 to 20 mA device used to measure the outdoor-air temperature. The outdoor-air temperature is used to determine when the EconoMi$er IV can be used for free cooling. The sensor is factory-installed on the EconoMi$er IV in the outdoor airstream. (See Fig. 60.) The operating range of temperature measurement is 40° to 100°F (4° to 38°C). See Fig. 60.

Supply Air Temperature (SAT) Sensor

The supply air temperature sensor is a 3 K thermistor located at the inlet of the indoor fan. (See Fig. 62.) This sensor is factory installed. The operating range of temperature measurement is 0° to 158°F (-18° to 70°C). See Table 15 for sensor temperature/resistance values.

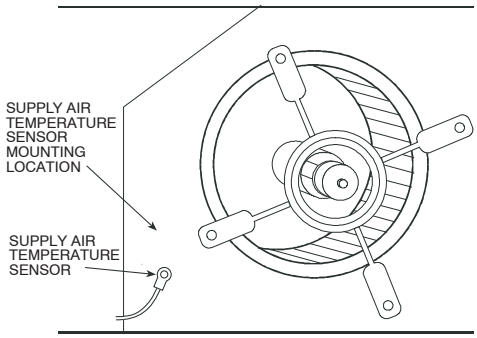

C06033

Fig. 62 - Supply Air Sensor Location

The temperature sensor looks like an eyelet terminal with wires running to it. The sensor is located in the "crimp end" and is sealed from moisture.

Outdoor Air Lockout Sensor

The EconoMi$er IV is equipped with an ambient temperature lockout switch located in the outdoor airstream which is used to lock out the compressors below a 42°F (6°C) ambient temperature. (See Fig. 57.)

EconoMi$er IV Control Modes

IMPORTANT: The optional EconoMi$er2 does not include a controller. The EconoMi$er2 is operated by a 4 to 20 mA signal from an existing field-supplied controller (such as PremierLink™ control). See Fig. 59 for wiring information.

Determine the EconoMi$er IV control mode before set up of the control. Some modes of operation may require different sensors. (See Table 22.) The EconoMi$er IV is supplied from the factory with a supply-air temperature sensor and an outdoor- air temperature sensor. This allows for operation of the EconoMi$er IV with outdoor air dry bulb changeover control. Additional accessories can be added to allow for different types of changeover control and operation of the EconoMi$er IV and unit.

Outdoor Dry Bulb Changeover

The standard controller is shipped from the factory configured for outdoor dry bulb changeover control. The outdoor air and supply air temperature sensors are included as standard. For this control mode, the outdoor temperature is compared to an adjustable setpoint selected on the control. If the outdoor-air temperature is above the setpoint, the EconoMi$er IV will adjust the outside air dampers to minimum position. If the outdoor-air temperature is below the setpoint, the position of the outside air dampers will be controlled to provided free cooling using outdoor air. When in this mode, the LED next to the free cooling setpoint potentiometer will be on. The changeover temperature setpoint is controlled by the free cooling setpoint potentiometer located on the control. (See Fig. 63.) The scale on the potentiometer is A, B, C,

and D. See Fig. 64 for the corresponding temperature changeover values.

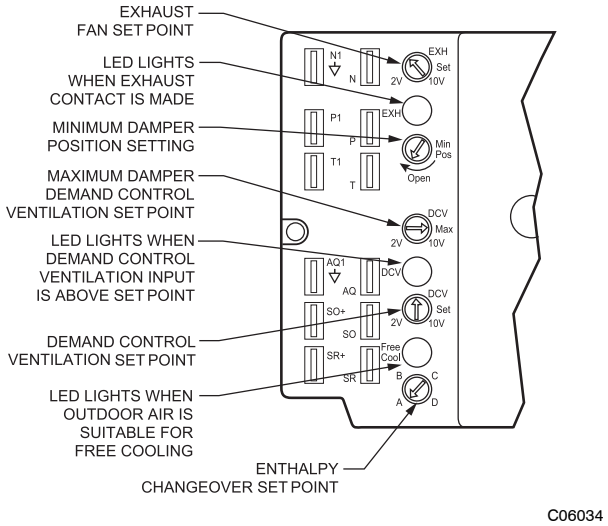

Fig. 63 - EconoMi$er IV Controller Potentiometer and LED Locations

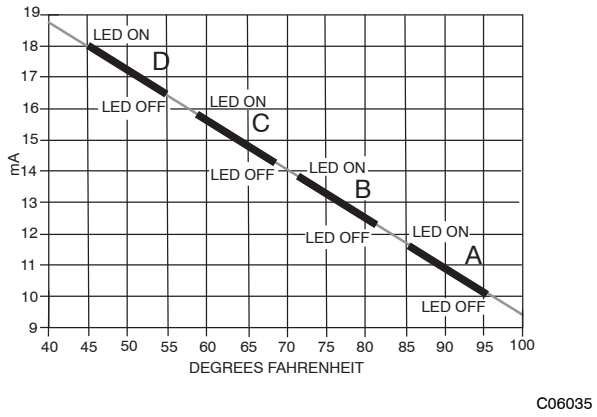

Fig. 64 - Outside Air Temperature Changeover Set-points

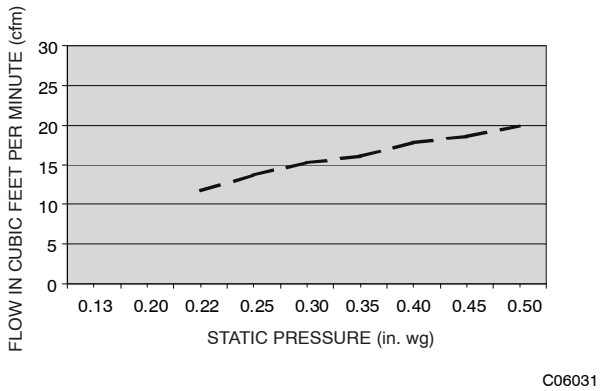

Fig. 65 - Outdoor-Air Damper Leakage

Differential Dry Bulb Control

For differential dry bulb control the standard outdoor dry bulb sensor is used in conjunction with an additional accessory dry bulb sensor (part number CRTEMPSN002A00). The accessory sensor must be mounted in the return airstream. (See Fig. 66.) Wiring is provided in the EconoMi$er IV wiring harness. (See Fig. 57.)

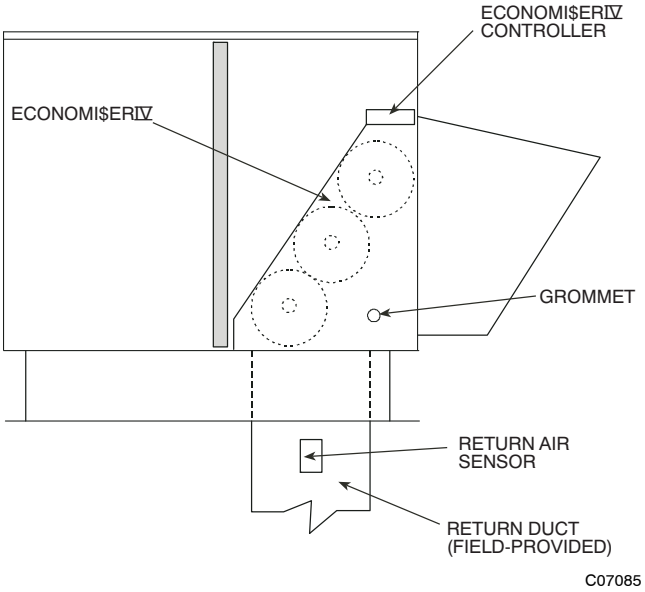

Fig. 66 - Return Air Temperature or Enthalpy Sensor Mounting Location

In this mode of operation, the outdoor-air temperature is compared to the return-air temperature and the lower temperature airstream is used for cooling. When using this mode of changeover control, turn the enthalpy setpoint potentiometer fully clockwise to the D setting. (See Fig. 63.)

Outdoor Enthalpy Changeover

For enthalpy control, accessory enthalpy sensor (part number HH57AC078) is required. Replace the standard outdoor dry bulb temperature sensor with the accessory enthalpy sensor in the same mounting location. (See Fig. 61.) When the outdoor air enthalpy rises above the outdoor enthalpy changeover setpoint, the outdoor-air damper moves to its minimum position. The outdoor enthalpy changeover setpoint is set with the outdoor enthalpy setpoint potentiometer on the EconoMi$er IV controller. The setpoints are A, B, C, and D. (See Fig. 67.) The factory-installed 620-ohm jumper must be in place across terminals S_R and SR+ on the EconoMi$er IV controller. (See Fig. 57 and 68.)

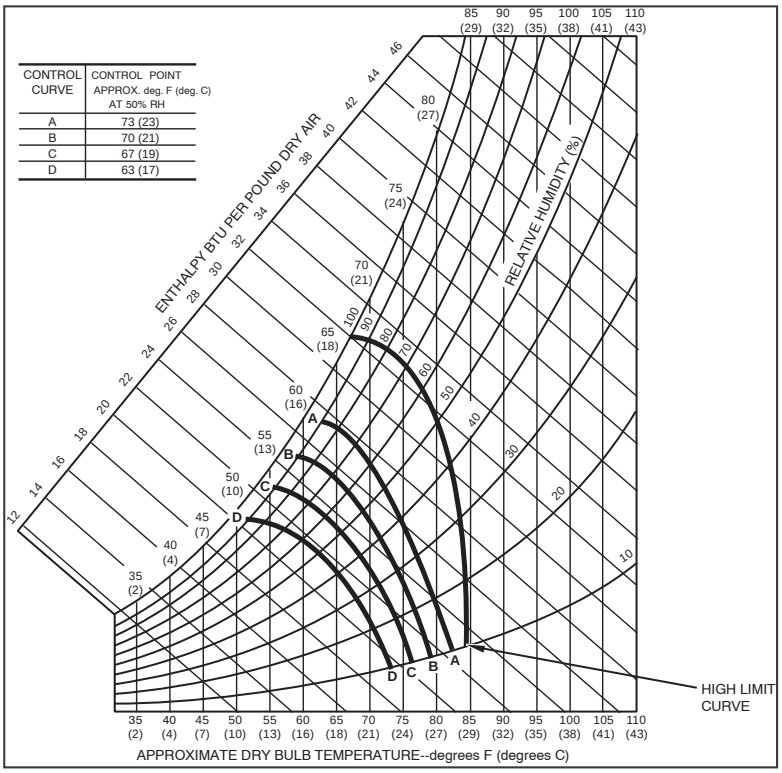

C06037

Fig. 67 - Enthalpy Changeover Setpoints

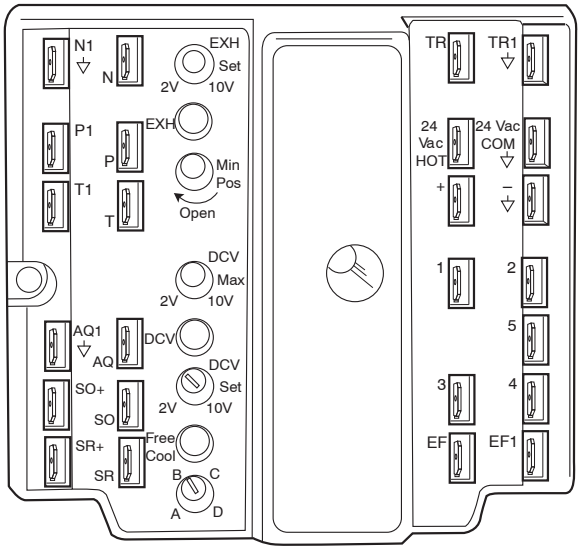

C06038

Fig. 68 - EonoMi$er IV Control

Differential Enthalpy Control

For differential enthalpy control, the EconoMi$er IV controller uses two enthalpy sensors (HH57AC078 and CRENTDIF004A00), one in the outside air and one in the return air duct. The EconoMi$er IV controller compares the outdoor air enthalpy to the return air enthalpy to determine EconoMi$er IV use. The controller selects the lower enthalpy air (return or outdoor) for cooling. For example, when the outdoor air has a lower enthalpy than the return air, the EconoMi$er IV opens to bring in outdoor air for free cooling.

Replace the standard outside air dry bulb temperature sensor with the accessory enthalpy sensor in the same mounting location. (See Fig. 57.) Mount the return air enthalpy sensor in the return air duct. (See Fig. 66.) Wiring is provided in the EconoMi$er IV wiring harness. (See Fig. 57.) The outdoor enthalpy changeover setpoint is set with the outdoor enthalpy setpoint potentiometer on the EconoMi$er IV controller. When using this mode of changeover control, turn the enthalpy setpoint potentiometer fully clockwise to the D setting.

Indoor Air Quality (IAQ) Sensor Input

The IAQ input can be used for demand control ventilation control based on the level of CO_2 measured in the space or return air duct.

Mount the accessory IAQ sensor according to manufacturer specifications. The IAQ sensor should be wired to the AQ and AQ1 terminals of the controller. Adjust the DCV potentiometers to correspond to the DCV voltage output of the indoor air quality sensor at the user-determined setpoint. (See Fig. 69.)

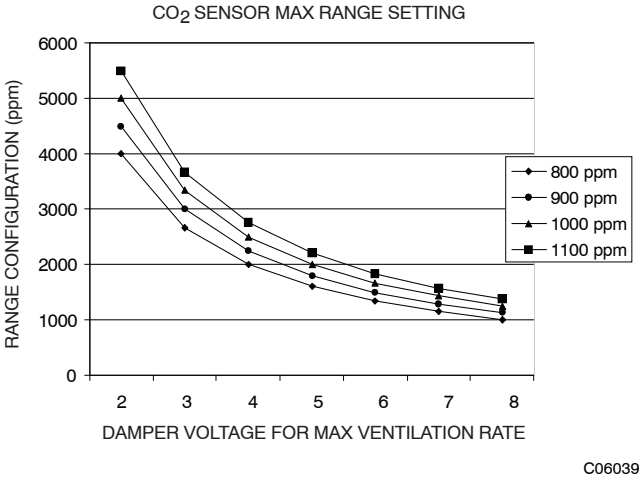

Fig. 69 - CO2 Sensor Maximum Range Settings

If a separate field-supplied transformer is used to power the IAQ sensor, the sensor must not be grounded or the EconoMi$er IV control board will be damaged.

When using demand ventilation, the minimum damper position represents the minimum ventilation position for VOC (volatile organic compounds) ventilation requirements. The maximum demand ventilation position is used for fully occupied ventilation.

When demand ventilation control is not being used, the minimum position potentiometer should be used to set the occupied ventilation position. The maximum demand ventilation position should be turned fully clockwise.

Exhaust Setpoint Adjustment

The exhaust setpoint will determine when the exhaust fan runs based on damper position (if accessory power exhaust is installed). The setpoint is modified with the Exhaust Fan Setpoint (EXH SET) potentiometer. (See Fig. 63.) The setpoint represents the damper position above which the exhaust fans will be turned on. When there is a call for exhaust, the EconoMi$er IV controller provides a 45 ± 15 second delay before exhaust fan activation to allow the dampers to open. This delay allows the damper to reach the appropriate position to avoid unnecessary fan overload.

Minimum Position Control

There is a minimum damper position potentiometer on the EconoMi$er IV controller. (See Fig. 63.) The minimum damper position maintains the minimum airflow into the building during the occupied period.

When using demand ventilation, the minimum damper position represents the minimum ventilation position for VOC (volatile organic compound) ventilation requirements. The maximum demand ventilation position is used for fully occupied ventilation.

When demand ventilation control is not being used, the minimum position potentiometer should be used to set the occupied ventilation position. The maximum demand ventilation position should be turned fully clockwise.

Adjust the minimum position potentiometer to allow the minimum amount of outdoor air, as required by local codes, to enter the building. Make minimum position adjustments with at least 10°F temperature difference between the outdoor and return-air temperatures.

To determine the minimum position setting, perform the following procedure:

1. Calculate the appropriate mixed air temperature using the following formula:

$$(T_O \times \frac{OA}{100}) + (TR \times \frac{RA}{100}) = T_M$$

T_O = Outdoor-Air Temperature

OA = Percent of Outdoor Air

T_R = Return-Air Temperature

RA = Percent of Return Air

T_M = Mixed-Air Temperature

As an example, if local codes require 10% outdoor air during occupied conditions, outdoor-air temperature is 60° F, and return-air temperature is 75°F.

(60 x .10) + (75 x .90) = 73.5°F

2. Disconnect the supply air sensor from terminals T and T1.
3. Ensure that the factory-installed jumper is in place across terminals P and P1. If remote damper positioning is being used, make sure that the terminals are wired according to Fig. 57 and that the minimum position potentiometer is turned fully clockwise.
4. Connect 24 vac across terminals TR and TR1.
5. Carefully adjust the minimum position potentiometer until the measured mixed air temperature matches the calculated value.
6. Reconnect the supply air sensor to terminals T and T1.

Remote control of the EconoMi$er IV damper is desirable when requiring additional temporary ventilation. If a field-supplied remote potentiometer (Honeywell part number S963B1128) is wired to the EconoMi$er IV controller, the minimum position of the damper can be controlled from a remote location.

To control the minimum damper position remotely, remove the factory-installed jumper on the P and P1 terminals on the EconoMi$er IV controller. Wire the field-supplied potentiometer to the P and P1 terminals on the EconoMi$er IV controller. (See Fig. 68.)

Damper Movement

Damper movement from full open to full closed (or vice versa) takes $2^1/_2$ minutes.

Thermostats

The EconoMi$er IV control works with conventional thermostats that have a Y1 (cool stage 1), Y2 (cool stage 2), W1 (heat stage 1), W2 (heat stage 2), and G (fan). The EconoMi$er IV control does not support space temperature sensors. Connections are made at the thermostat terminal connection board located in the main control box.

Occupancy Control

The factory default configuration for the EconoMi$er IV control is occupied mode. Occupied status is provided by the black jumper from terminal TR to terminal N. When unoccupied mode is desired, install a field-supplied

timeclock function in place of the jumper between TR and N. (See Fig. 57.) When the timeclock contacts are closed, the EconoMi$er IV control will be in occupied mode. When the timeclock contacts are open (removing the 24-v signal from terminal N), the EconoMi$er IV will be in unoccupied mode.

Demand Control Ventilation (DCV)

When using the EconoMi$er IV for demand controlled ventilation, there are some equipment selection criteria which should be considered. When selecting the heat capacity and cool capacity of the equipment, the maximum ventilation rate must be evaluated for design conditions. The maximum damper position must be calculated to provide the desired fresh air.

Typically the maximum ventilation rate will be about 5 to 10% more than the typical cfm required per person, using normal outside air design criteria.

A proportional anticipatory strategy should be taken with the following conditions: a zone with a large area, varied occupancy, and equipment that cannot exceed the required ventilation rate at design conditions. Exceeding the required ventilation rate means the equipment can condition air at a maximum ventilation rate that is greater than the required ventilation rate for maximum occupancy. A proportional-anticipatory strategy will cause the fresh air supplied to increase as the room CO_2 level increases even though the CO_2 setpoint has not been reached. By the time the CO_2 level reaches the setpoint, the damper will be at maximum ventilation and should maintain the setpoint.

In order to have the CO_2 sensor control the economizer damper in this manner, first determine the damper voltage output for minimum or base ventilation. Base ventilation is the ventilation required to remove contaminants during unoccupied periods. The following equation may be used to determine the percent of outside air entering the building for a given damper position. For best results there should be at least a 10 degree difference in outside and return-air temperatures.

$$(T_O \times \frac{OA}{100}) + (TR \times \frac{RA}{100}) = T_M$$

T_O = Outdoor-Air Temperature

OA = Percent of Outdoor Air

T_R = Return-Air Temperature

RA = Percent of Return Air

T_M = Mixed-Air Temperature

Once base ventilation has been determined, set the minimum damper position potentiometer to the correct position.

The same equation can be used to determine the occupied or maximum ventilation rate to the building. For example, an output of 3.6 volts to the actuator provides a base ventilation rate of 5% and an output of 6.7 volts provides the maximum ventilation rate of 20% (or base plus 15 cfm per person). Use Fig. 69 to determine the maximum setting of the CO_2 sensor. For example, an 1100 ppm setpoint relates to a 15 cfm per person design. Use the 1100 ppm curve on Fig. 69 to find the point when the CO_2 sensor output will be 6.7 volts. Line up the point on the graph with the left side of the chart to determine that the range configuration for the CO_2 sensor should be 1800 ppm. The EconoMi$er IV controller will output the 6.7 volts from the CO_2 sensor to the actuator when the CO_2 concentration in the space is at 1100 ppm. The DCV setpoint may be left at 2 volts since the CO_2 sensor voltage will be ignored by the EconoMi$er IV controller until it rises above the 3.6 volt setting of the minimum position potentiometer.

Once the fully occupied damper position has been determined, set the maximum damper demand control ventilation potentiometer to this position. Do not set to the maximum position as this can result in over-ventilation to the space and potential high humidity levels.

CO_2 Sensor Configuration

The CO_2 sensor has preset standard voltage settings that can be selected anytime after the sensor is powered up. (See Table 22.)

Use setting 1 or 2 for Carrier equipment. (See Table 22.)

1. Press Clear and Mode buttons. Hold at least 5 seconds until the sensor enters the Edit mode.
2. Press Mode twice. The STDSET Menu will appear.

Table 22 – EconoMi$er IV Sensor Usage

APPLICATION	ECONOMI$ER IV WITH OUTDOOR AIR DRY BULB SENSOR		
	Accessories Required		
Outdoor Air Dry Bulb	None. The outdoor air dry bulb sensor is factory installed.		
Differential Dry Bulb	CRTEMPSN002A00*		
Single Enthalpy	HH57AC078		
Differential Enthalpy	HH57AC078 and CRENTDIF004A00*		
CO_2 for DCV Control using a Wall-Mounted CO_2 Sensor	33ZCSENCO2		
CO_2 for DCV Control using a Duct-Mounted CO_2 Sensor	33ZCSENCO2† and 33ZCASPCO2**	OR	CRCBDIOX005A00††

*CRENTDIF004A00 and CRTEMPSN002A00 accessories are used on many different base units. As such, these kits may contain parts that will not be needed for installation.

† 33ZCSENCO2 is an accessory CO_2 sensor.

** 33ZCASPCO2 is an accessory aspirator box required for duct-mounted applications.

†† CRCBDIOX005A00 is an accessory that contains both 33ZCSENCO2 and 33ZCASPCO2 accessories.

3. Use the Up/Down button to select the preset number. (See Table 22.)
4. Press Enter to lock in the selection.
5. Press Mode to exit and resume normal operation.

The custom settings of the CO_2 sensor can be changed anytime after the sensor is energized. Follow the steps below to change the non-standard settings:

1. Press Clear and Mode buttons. Hold at least 5 seconds until the sensor enters the Edit mode.
2. Press Mode twice. The STDSET Menu will appear.
3. Use the Up/Down button to toggle to the NONSTD menu and press Enter.
4. Use the Up/Down button to toggle through each of the nine variables, starting with Altitude, until the desired setting is reached.

5. Press Mode to move through the variables.
6. Press Enter to lock in the selection, then press Mode to continue to the next variable.

Dehumidification of Fresh Air with DCV (Demand Controlled Ventilation) Control

If normal rooftop heating and cooling operation is not adequate for the outdoor humidity level, an energy recovery unit and/or a dehumidification option should be considered.

EconoMi$er IV Preparation

This procedure is used to prepare the EconoMi$er IV for troubleshooting. No troubleshooting or testing is done by performing the following procedure.

NOTE: This procedure requires a 9-v battery, 1.2 kilo-ohm resistor, and a 5.6 kilo-ohm resistor which are not supplied with the EconoMi$er IV.

IMPORTANT: Be sure to record the positions of all potentiometers before starting troubleshooting.

1. Disconnect power at TR and TR1. All LEDs should be off. Exhaust fan contacts should be open.
2. Disconnect device at P and P1.
3. Jumper P to P1.
4. Disconnect wires at T and T1. Place 5.6 kilo-ohm resistor across T and T1.
5. Jumper TR to 1.
6. Jumper TR to N.
7. If connected, remove sensor from terminals SO and +. Connect 1.2 kilo-ohm 4074EJM checkout resistor across terminals SO and +.
8. Put 620-ohm resistor across terminals SR and +.
9. Set minimum position, DCV setpoint, and exhaust potentiometers fully CCW (counterclockwise).
10. Set DCV maximum position potentiometer fully CW (clockwise).
11. Set enthalpy potentiometer to D.
12. Apply power (24 vac) to terminals TR and TR1.

Differential Enthalpy

To check differential enthalpy:

1. Make sure EconoMi$er IV preparation procedure has been performed.
2. Place 620-ohm resistor across SO and +.
3. Place 1.2 kilo-ohm resistor across SR and +. The Free Cool LED should be lit.
4. Remove 620-ohm resistor across SO and +. The Free Cool LED should turn off.
5. Return EconoMi$er IV settings and wiring to normal after completing troubleshooting.

Single Enthalpy

To check single enthalpy:

1. Make sure EconoMi$er IV preparation procedure has been performed.
2. Set the enthalpy potentiometer to A (fully CCW). The Free Cool LED should be lit.
3. Set the enthalpy potentiometer to D (fully CW). The Free Cool LED should turn off.
4. Return EconoMi$er IV settings and wiring to normal after completing troubleshooting.

DCV (Demand Controlled Ventilation) and Power Exhaust

To check DCV and Power Exhaust:

1. Make sure EconoMi$er IV preparation procedure has been performed.
2. Ensure terminals AQ and AQ1 are open. The LED for both DCV and Exhaust should be off. The actuator should be fully closed.
3. Connect a 9-v battery to AQ (positive node) and AQ1 (negative node). The LED for both DCV and Exhaust should turn on. The actuator should drive to between 90 and 95% open.
4. Turn the Exhaust potentiometer CW until the Exhaust LED turns off. The LED should turn off when the potentiometer is approximately 90%. The actuator should remain in position.
5. Turn the DCV setpoint potentiometer CW until the DCV LED turns off. The DCV LED should turn off when the potentiometer is approximately 9-v. The actuator should drive fully closed.
6. Turn the DCV and Exhaust potentiometers CCW until the Exhaust LED turns on. The exhaust contacts will close 30 to 120 seconds after the Exhaust LED turns on.
7. Return EconoMi$er IV settings and wiring to normal after completing troubleshooting.

DCV Minimum and Maximum Position

To check the DCV minimum and maximum position:

1. Make sure EconoMi$er IV preparation procedure has been performed.
2. Connect a 9-v battery to AQ (positive node) and AQ1 (negative node). The DCV LED should turn on. The actuator should drive to between 90 and 95% open.
3. Turn the DCV Maximum Position potentiometer to midpoint. The actuator should drive to between 20 and 80% open.
4. Turn the DCV Maximum Position potentiometer to fully CCW. The actuator should drive fully closed.
5. Turn the Minimum Position potentiometer to midpoint. The actuator should drive to between 20 and 80% open.
6. Turn the Minimum Position Potentiometer fully CW. The actuator should drive fully open.
7. Remove the jumper from TR and N. The actuator should drive fully closed.
8. Return EconoMi$er IV settings and wiring to normal after completing troubleshooting.

Supply-Air Sensor Input

To check supply-air sensor input:

1. Make sure EconoMi$er IV preparation procedure has been performed.

2. Set the Enthalpy potentiometer to A. The Free Cool LED turns on. The actuator should drive to between 20 and 80% open.
3. Remove the 5.6 kilo-ohm resistor and jumper T to T1. The actuator should drive fully open.
4. Remove the jumper across T and T1. The actuator should drive fully closed.
5. Return EconoMi$er IV settings and wiring to normal after completing troubleshooting.

EconoMi$er IV Troubleshooting Completion

This procedure is used to return the EconoMi$er IV to operation. No troubleshooting or testing is done by performing the following procedure.

1. Disconnect power at TR and TR1.
2. Set enthalpy potentiometer to previous setting.
3. Set DCV maximum position potentiometer to previous setting.
4. Set minimum position, DCV setpoint, and exhaust potentiometers to previous settings.
5. Remove 620-ohm resistor from terminals SR and +.
6. Remove 1.2 kilo-ohm checkout resistor from terminals SO and +. If used, reconnect sensor from terminals SO and +.
7. Remove jumper from TR to N.
8. Remove jumper from TR to 1.
9. Remove 5.6 kilo-ohm resistor from T and T1. Reconnect wires at T and T1.
10. Remove jumper from P to P1. Reconnect device at P and P1.
11. Apply power (24 vac) to terminals TR and TR1.

WIRING DIAGRAMS

See Fig. 70-71 for typical wiring diagrams.

PRE-START-UP

⚠ WARNING

PERSONAL INJURY HAZARD

Failure to follow this warning could result in personal injury or death.

1. Follow recognized safety practices and wear protective goggles when checking or servicing refrigerant system.
2. Do not operate compressor or provide any electric power to unit unless compressor terminal cover is in place and secured.
3. Do not remove compressor terminal cover until all electrical sources are disconnected.
4. Relieve all pressure from system before touching or disturbing anything inside terminal box if refrigerant leak is suspected around compressor terminals.
5. Never attempt to repair soldered connection while refrigerant system is under pressure.
6. Do not use torch to remove any component. System contains oil and refrigerant under pressure. To remove a component, wear protective goggles and proceed as follows:
   a. Shut off electrical power and then gas to unit.
   b. Recover refrigerant to relieve all pressure from system using both high-pressure and low pressure ports.
   c. Cut component connection tubing with tubing cutter and remove component from unit.
   d. Carefully unsweat remaining tubing stubs when necessary. Oil can ignite when exposed to torch flame.

Proceed as follows to inspect and prepare the unit for initial start-up:

1. Remove all access panels.
2. Read and follow instructions on all WARNING, CAUTION, and INFORMATION labels attached to, or shipped with, unit.
3. Make the following inspections:
   a. Inspect for shipping and handling damages such as broken lines, loose parts, or disconnected wires, etc.
   b. Inspect for oil at all refrigerant tubing connections and on unit base. Detecting oil generally indicates a refrigerant leak. Leak-test all refrigerant tubing connections using electronic leak detector, halide torch, or liquid-soap solution.
   c. Inspect all field-wiring and factory-wiring connections. Be sure that connections are completed and tight. Be sure that wires are not in contact with refrigerant tubing or sharp edges.

d. Inspect coil fins. If damaged during shipping and handling, carefully straighten fins with a fin comb.

4. Verify the following conditions:
   a. Make sure that condenser-fan blade are correctly positioned in fan orifice. See Condenser-Fan Adjustment section on page 11 for more details.
   b. Make sure that air filter(s) is in place.
   c. Make sure that condensate drain trap is filled with water to ensure proper drainage.
   d. Make sure that all tools and miscellaneous loose parts have been removed.

START-UP, GENERAL

Unit Preparation

Make sure that unit has been installed in accordance with installation instructions and applicable codes.

Gas Piping

Check gas piping for leaks.

⚠ WARNING

UNIT OPERATION AND SAFETY HAZARD

Failure to follow this warning could result in personal injury or death.

Disconnect gas piping from unit when leak testing at pressure greater than 1/2 psig. Pressures greater than 1/2 psig will cause gas valve damage resulting in hazardous condition. If gas valve is subjected to pressure greater than 1/2 psig, it must be replaced before use. When pressure testing field-supplied gas piping at pressures of 1/2 psig or less, a unit connected to such piping must be isolated by manually closing the gas valve.

Return-Air Filters

Make sure correct filters are installed in unit (see Appendix II - Physical Data). Do not operate unit without return-air filters.

Outdoor-Air Inlet Screens

Outdoor-air inlet screen must be in place before operating unit.

Compressor Mounting

Compressors are internally spring mounted. Do not loosen or remove compressor hold down bolts.

Internal Wiring

Check all electrical connections in unit control boxes. Tighten as required.

Refrigerant Service Ports

Each unit system has two 1/4" SAE flare (with check valves) service ports: one on the suction line, and one on the compressor discharge line. Be sure that caps on the ports are tight.

Compressor Rotation

On 3-phase units with scroll compressors, it is important to be certain compressor is rotating in the proper direction. To determine whether or not compressor is rotating in the proper direction:

1. Connect service gauges to suction and discharge pressure fittings.
2. Energize the compressor.
3. The suction pressure should drop and the discharge pressure should rise, as is normal on any start-up.

If the suction pressure does not drop and the discharge pressure does not rise to normal levels:

1. Note that the evaporator fan is probably also rotating in the wrong direction.
2. Turn off power to the unit and install lockout tag.
3. Reverse any two of the unit power leads.
4. Re-energize to the compressor. Check pressures.

The suction and discharge pressure levels should now move to their normal start-up levels.

NOTE: When the compressor is rotating in the wrong direction, the unit will make an elevated level of noise and will not provide cooling.

Cooling

Set space thermostat to OFF position. To start unit, turn on main power supply. Set system selector switch at COOL position and fan switch at AUTO. position. Adjust thermostat to a setting below room temperature. Compressor starts on closure of contactor.

Check unit charge. Refer to Refrigerant Charge section on page 8.

Reset thermostat at a position above room temperature. Compressor will shut off. Evaporator fan will shut off after a 30-second delay.

TO SHUT OFF UNIT

Set system selector switch at OFF position. Resetting thermostat at a position above room temperature shuts unit off temporarily until space temperature exceeds thermostat setting.

Main Burners

Main burners are factory set and should require no adjustment.

TO CHECK ignition of main burners and heating controls, move thermostat set point above room temperature and verify that the burners light and evaporator fan is energized. Check heating effect, then lower the thermostat setting below the room temperature and verify that the burners and evaporator fan turn off.

Refer to Tables 11 and 12 for the correct orifice to use at high altitudes.

Heating

1. Purge gas supply line of air by opening union ahead of the gas valve. If gas odor is detected, tighten union and wait 5 minutes before proceeding.

2. Turn on electrical supply and manual gas valve.
3. Set system switch selector at HEAT position and fan switch at AUTO. or ON position. Set heating temperature lever above room temperature.
4. The induced-draft motor will start.
5. After a call for heating, the main burners should light within 5 seconds. If the burner does not light, then there is a 22-second delay before another 5-second try. If the burner still does not light, the time delay is repeated. If the burner does not light within 15 minutes, there is a lockout. To reset the control, break the 24 v power to W1.
6. The evaporator-fan motor will turn on 45 seconds after burner ignition.
7. The evaporator-fan motor will turn off in 45 seconds after the thermostat temperature is satisfied.
8. Adjust airflow to obtain a temperature rise within the range specified on the unit nameplate.

NOTE: The default value for the evaporator-fan motor on/off delay is 45 seconds. The Integrated Gas Unit Controller (IGC) modifies this value when abnormal limit switch cycles occur. Based upon unit operating conditions, the on delay can be reduced to 0 seconds and the off delay can be extended to 180 seconds. When one flash of the LED is observed, the evaporator-fan on/off delay has been modified.

If the limit switch trips at the start of the heating cycle during the evaporator on delay, the time period of the on delay for the next cycle will be 5 seconds less than the time at which the switch tripped. (Example: If the limit switch trips at 30 seconds, the evaporator-fan on delay for the next cycle will occur at 25 seconds.) To prevent short-cycling, a 5-second reduction will only occur if a minimum of 10 minutes has elapsed since the last call for heating.

The evaporator-fan off delay can also be modified. Once the call for heating has ended, there is a 10-minute period during which the modification can occur. If the limit switch trips during this period, the evaporator-fan off delay will increase by 15 seconds. A maximum of 9 trips can occur, extending the evaporator-fan off delay to 180 seconds.

To restore the original default value, reset the power to the unit.

TO SHUT OFF UNIT

Set system selector switch at OFF position. Resetting heating selector lever below room temperature will temporarily shut unit off until space temperature falls below thermostat setting.

Ventilation (Continuous Fan)

Set fan and system selector switches at ON and OFF positions, respectively. Evaporator fan operates continuously to provide constant air circulation. When the evaporator-fan selector switch is turned to the OFF position, there is a 30-second delay before the fan turns off.

START-UP, PREMIERLINK CONTROLS

⚠ WARNING

ELECTRICAL OPERATION HAZARD

Failure to follow this warning could result in personal injury or death.

The unit must be electrically grounded in accordance with local codes and NEC ANSI/NFPA 70 (American National Standards Institute/National Fire Protection Association.)

Use the Carrier network communication software to start up and configure the PremierLink controller.

Changes can be made using the ComfortWORKS® software, ComfortVIEW™ software, Network Service Tool, System Pilot™ device, or Touch Pilot™ device. The System Pilot and Touch Pilot are portable interface devices that allow the user to change system set-up and setpoints from a zone sensor or terminal control module. During start-up, the Carrier software can also be used to verify communication with Premier-Link controller.

NOTE: All set-up and setpoint configurations are factory set and field-adjustable.

For specific operating instructions, refer to the literature provided with user interface software.

Perform System Check-Out

1. Check correctness and tightness of all power and communication connections.
2. At the unit, check fan and system controls for proper operation.
3. At the unit, check electrical system and connections of any optional electric reheat coil.
4. Check to be sure the area around the unit is clear of construction dirt and debris.
5. Check that final filters are installed in the unit. Dust and debris can adversely affect system operation.
6. Verify that the PremierLink controls are properly connected to the CCN bus.

Initial Operation and Test

Perform the following procedure:

1. Apply 24 vac power to the control.
2. Connect the service tool to the phone jack service port of the controller.
3. Using the Service Tool, upload the controller from address 0, 31 at 9600 baud rate. The address may be set at this time. Make sure that Service Tool is connected to only one unit when changing the address.

Memory Reset

DIP switch 4 causes an E-squared memory reset to factory defaults after the switch has been moved from position 0 to position 1 and the power has been restored. To enable the feature again, the switch must be put back to the 0 position and power must be restored; this prevents

subsequent resets to factory defaults if the switch is left at position 1.

To cause a reset of the non-volatile memory (to factory defaults), turn the controller power off if it is on, move the switch from position 1 to position 0, and then apply power to the controller for a minimum of 5 seconds. At this point, no action occurs, but the controller is now ready for the memory to reset. Remove power to the controller again and move the switch from position 0 to position 1. This time, when power is applied, the memory will reset to factory defaults. The controller address will return to bus 0 element 31, indicating that memory reset occurred.

Refer to Installation Instruction 33CS-58SI for full discussion on configuring the PremierLink control system.

Operating Sequence, Base Unit Controls

COOLING, UNITS WITHOUT ECONOMIZER — When thermostat calls for cooling, terminals G and Y1 are energized. The indoor-fan contactor (IFC) and compressor contactor are energized and indoor-fan motor, compressor, and outdoor fan starts. The outdoor fan motor runs continuously while unit is cooling.

HEATING, UNITS WITHOUT ECONOMIZER — When the thermostat calls for heating, terminal W1 is energized. To prevent thermostat short-cycling, the unit is locked into the Heating mode for at least 1 minute when W1 is energized. The induced-draft motor is energized and the burner ignition sequence begins. The indoor (evaporator) fan motor (IFM) is energized 45 seconds after a flame is ignited. On units equipped for two stages of heat, when additional heat is needed, W2 is energized and the high-fire solenoid on the main gas valve (MGV) is energized. When the thermostat is satisfied and W1 is deenergized, the IFM stops after a 45-second time off delay.

COOLING, UNITS WITH ECONOMI$ER IV — When free cooling is not available, the compressors will be controlled by the zone thermostat. When free cooling is available, the outdoor-air damper is modulated by the EconoMi$er IV control to provide a 50 to 55°F supply-air temperature into the zone. As the supply-air temperature fluctuates above 55 or below 50°F, the dampers will be modulated (open or close) to bring the supply- air temperature back within the setpoint limits.

Integrated EconoMi$er IV operation on single stage units requires a 2-stage thermostat (Y1 and Y2).

For EconoMi$er IV operation, there must be a thermostat call for the fan (G). This will move the damper to its minimum position during the occupied mode.

If the increase in cooling capacity causes the supply-air temperature to drop below 45°F, then the outdoor-air damper position will be fully closed. If the supply-air temperature continues to fall, the outdoor-air damper will close. Control returns to normal once the supply-air temperature rises above 48°F. If optional power exhaust is installed, as the outdoor-air damper opens and closes, the power exhaust fans will be energized and deenergized.

If field-installed accessory CO2 sensors are connected to the EconoMi$er IV control, a demand controlled ventilation strategy will begin to operate. As the CO2 level in the zone increases above the CO2 setpoint, the minimum position of the damper will be increased proportionally. As the CO2 level decreases because of the increase in fresh air, the outdoor-air damper will be proportionally closed. Damper position will follow the higher demand condition from DCV mode or free cooling mode.

Damper movement from full closed to full open (or vice versa) will take between 1-1/2 and 2-1/2 minutes.

If free cooling can be used as determined from the appropriate changeover command (switch, dry bulb, enthalpy curve, differential dry bulb, or differential enthalpy), a call for cooling (Y1 closes at the thermostat) will cause the control to modulate the dampers open to maintain the supply air temperature setpoint at 50 to 55°F. As the supply-air temperature drops below the setpoint range of 50 to 55°F, the control will modulate the outdoor-air dampers closed to maintain the proper supply-air temperature.

HEATING, UNITS WITH ECONOMI$ER IV — When the room temperature calls for heat, the heating controls are energized as described in the Heating, Units Without Economizer section. When the thermostat is satisfied, the economizer damper moves to the minimum position.

Operating Sequence, PremierLink Control

THERMOSTAT MODE — If the PremierLink controller is configured for Thermostat mode (TSTAT), it will control only to the thermostat inputs on J4. These inputs can be overridden through CCN communication via the CV_TSTAT points display table. When in this mode, the fire safety shutdown (FSD) input cannot be used, so any fire/life safety shutdown must be physically wired to disable the 24 vac control circuit to the unit.

Indoor Fan — The indoor fan output will be energized whenever there is 24 vac present on the G input. The indoor fan will be turned on without any delay and the economizer damper will open to its minimum position if the unit has a damper connected to the controller. This will also occur if the Premier-Link controller has been configured for electric heat or heat pump operation.

Cooling — For cooling operation, there must be 24 vac present on G. When G is active, the PremierLink controller will then determine if outdoor conditions are suitable for economizer cooling when an economizer damper is available. A valid OAT, SPT (CCN space temperature) and SAT (supply air temperature) sensor MUST be installed for proper economizer operation. It recommended that an outdoor or differential enthalpy sensor also be installed. If one is not present, then a jumper is needed on the ENTH input on J4, which will indicate that the enthalpy will always be low. Economizer operation will be based only on outdoor air dry bulb temperature. The conditions are suitable when: enthalpy is low, OAT is less than OATL High Lockout for TSTAT,

and OAT is less than OATMAX, the high setpoint for free cooling. The default for OATL is 65°F. The default for OATMAX is 75°F.

When all of the above conditions are satisfied and all the required sensors are installed, the PremierLink controller will use the economizer for cooling. One of three different control routines will be used depending on the temperature of the outside air. The routines use a PID loop to control the SAT to a supply air setpoint (SASP) based on the error from setpoint (SASPSAT). The SASP is determined by the routine.

If an economizer is not available or the conditions are not met for the following economizer routines below, the compressors 1 and 2 will be cycled based on Y1 and Y2 inputs respectively.

Any time the compressors are running, the PremierLink controller will lock out the compressors if the SAT becomes too low. These user configurable settings are found in the SERVICE configuration table:

Compressor 1 Lockout at SAT < SATLO1 (50 to 65°F) (default is 55°F)

Compressor 2 Lockout at SAT < SATLO2 (45 to 55°F) (default is 50°F)

After a compressor is locked out, it may be started again after a normal time-guard period and the supply-air temperature has increased at least 8°F above the lockout setpoint.

Routine No. 1: If the OAT ≤ DXLOCK (OAT DX lockout temperature) and DX Cooling Lockout is enabled when Y1 input is energized, the economizer will be modulated to maintain SAT at the Supply Air Setpoint (SASP) = SATLO1 + 3°F (Supply Air Low Temp lockout for compressor 1). When Y2 is energized, the economizer will be modulated to control to a lower SASP = SATLO2 + 3°F (Supply Air Low Temp lockout for compressor no. 2). Mechanical cooling is locked out and will not be energized.

Routine No. 2: If DXLOCK (or DX Cooling Lockout is disabled) < OAT ≤ 68°F when Y1 input is energized, the economizer will be modulated to maintain SAT at SASP = SATLO1 + 3°F. If the SAT > SASP + 5°F and the economizer position > 85% then the economizer will close the to minimum position for three minutes or until the SAT > 68°F. The economizer integrator will then be reset and begin modulating to maintain the SASP after stage one has been energized for 90 seconds.

When Y2 is energized, the economizer will be modulated to control to a lower supply air setpoint SASP= SATLO2 + 3°F If the SAT > SASP + 5°F it will close the economizer to minimum position for 3 minutes, reset the integrator for the economizer, then start modulating the economizer to maintain the SASP after the stage two has been on for 90 seconds. This provides protection for the compressor against flooded starts and allow refrigerant flow to stabilize before modulating the economizer again. By using return air across the evaporator coil just after the compressor has started allows for increased refrigerant flow rates providing better oil return of any oil washed out during compressor start-up.

Routine No. 3: If the OAT > 68°F and the enthalpy is low and the OAT <SPT then the economizer will open to 100% and compressors 1 and 2 will be cycled based on Y1 and Y2 inputs respectively. If any of these conditions are not met the economizer will go to minimum position.

If there is no call for heating or cooling, the economizer, if available, will maintain the SASP at 70°F.

Heating — For gas or electric heat, HS1 and HS2 outputs will follow W1 and W2 inputs respectively. The fan will also be turned on if it is configured for electric heat.

Heating may also be energized when an IAQ sensor installed and has overridden the minimum economizer damper position. If the OAT < 55°F and an IAQ sensor is installed and the IAQ minimum position > minimum damper position causing the SAT to decrease below the SPT - 10°F, then the heat stages will be cycled to temper the SAT to maintain a temperature between the SPT and the SPT + 10°F.

Auxiliary Relay configured for Exhaust Fan — If the Auxiliary Relay is configured for exhaust fan (AUXOUT = 1) in the CONFIG configuration table and Continuous Power Exhaust (MODPE) is enable in the SERVICE configuration table then the output (HS3) will be energized whenever the G input is on. If the MODPE is disabled then output will be energized based on the Power Exhaust Setpoint (PES) in the SETPOINT table.

Indoor Air Quality — If the optional indoor air quality (IAQI) sensor is installed, the PremierLink controller will maintain indoor air quality within the space at the user-configured differential setpoint (IAQD) in the CONFIG configuration table. The setpoint is the difference between the IAQI and an optional outdoor air quality sensor (OAQ). If the OAQ is not present then a fixed value of 400 ppm is used. The actual space IAQ setpoint (IAQS) is calculated as follows:

IAQS = IAQD + OAQ (OAQ = 400 ppm if not present)

As air quality within the space changes, the minimum position of the economizer damper will be changed also thus allowing more or less outdoor air into the space depending on the relationship of the IAQI to the IAQS. The IAQ algorithm runs every 30 seconds and calculates IAQ minimum position value using a PID loop on the IAQI deviation from the IAQS. The IAQ minimum position is then compared against the user configured minimum position (MDP) and the greatest value becomes the final minimum damper position (IQMP). If the calculated IAQ Minimum Position is greater than the IAQ maximum damper position (IAQMAXP) decision in the SERVICE configuration table, then it will be clamped to IAQMAXP value.

If IAQ is configured for low priority, the positioning of the economizer damper can be overridden by comfort requirements. If the SAT < SASP -8°F and both stages of heat are on for more then 4 minutes or the SAT > SASP + 5°F and both stages of cooling on for more then 4 minutes

then the IAQ minimum damper position will become 0 and the IQMP = MDP. IAQ mode will resume when the SAT > SASP -8°F in heating or the SAT < SASP + 5°F in cooling. If the Premier-

Link controller is configured for 1 stage of heat and cool or is only using a single stage thermostat input, this function will not work as it requires the both Y1 and Y2 or W1 and W2 inputs to be active. In this application, it is recommended that the user configure IAQ priority for high.

If IAQ is configured for high priority and the OAT < 55°F and the SAT < (SPT -10°F), the algorithm will enable the heat stages to maintain the SAT between the SPT and the SPT + 10°F.

CCN SENSOR MODE — When the PremierLink controller is configured for CCN control, it will control the compressor, economizer and heating outputs based its own space temperature input and setpoints or those received from Linkage. An optional CO2 IAQ sensor mounted in the space or received through communications can also influence the economizer and heating outputs. The PremierLink controller does not have a hardware clock so it must have another device on the CCN communication bus broadcasting time. The controller will maintain its own time once it has received time as long as it has power and will send a request for time once a minute until it receives time when it has lost power and power is restored. The controller will control to unoccupied setpoints until it has received a valid time. The controller must have valid time in order to perform any broadcast function, follow an occupancy schedule, perform IAQ pre-occupancy purge and many other functions as well. The following sections describe the operation for the functions of the PremierLink controller.

Indoor Fan — The indoor fan will be turned on whenever any one of the following conditions are met:

- If the PremierLink controller is in the occupied mode and ASHRAE 90.1 Supply Fan is configured for Yes in the CONFIG table. This will be determined by its own internal occupancy schedule if it is programmed to follow its local schedule or broadcast its local schedule as a global schedule, or following a global schedule broadcast by another device.
- If PremierLink controller is in the occupied mode and ASHRAE 90.1 Supply Fan is configured for No and there is a heat or cool demand (fan auto mode)
- If the PremierLink controller is in the occupied mode and ASHRAE 90.1 Supply Fan is configured for Yes when Linkage is active and the Linkage Coordinator device is sending an occupied mode flag
- When Temperature Compensated Start is active
- When Free Cool is active
- When Pre-Occupancy Purge is active
- Whenever there is a demand for cooling or heating in the unoccupied mode
- Whenever the Remote Contact input is configured for Remote Contact (RC_DC=1 in SERVICE table) and it is closed or the point is forced Closed via communications in the STATUS01 points display table (remote contact closed = occupied, remote contact open = unoccupied)
- Whenever the H3_EX_RV point is configured for Dehumidification (AUXOUT=5 in CONFIG table) and it is in the unoccupied mode and the indoor RH exceeds the unoccupied humidity setpoint
- Whenever the Supply Fan Relay point is forced On in the STATUS01 points display table

The fan will also continue to run as long as compressors are on when transitioning from occupied to unoccupied with the exception of Fire Shutdown mode. If the Fire Shutdown input point is closed or forced in the STATUS01 points display table, the fan will be shutdown immediately regardless of the occupancy state or demand.

The PremierLink controller has an optional Supply Fan Status input to provide proof of airflow. If this is enabled, the point will look for a contact closure whenever the Supply Fan Relay is on. If the input is not enabled, then it will always be the same state as the Supply Fan Relay. The cooling, economizer and heating routines will use this input point for fan status.

Cooling — The compressors are controlled by the Cooling Control Loop that is used to calculate the desired SAT needed to satisfy the space. It will compare the SPT to the Occupied Cool Setpoint (OCSP) + the T56 slider offset (STO) when occupied and the Unoccupied Cool Setpoint (UCSP + Unoccupied Cooling Deadband) if unoccupied to calculate a Cooling Submaster Reference (CCSR) that is then used by the staging algorithm (Cooling submaster loop) to calculate the required number of cooling stages. The economizer, if available, will be used as the first stage of cooling in addition to the compressors. This loop runs every minute. The following conditions must be met in order for this algorithm to run:

- indoor fan has been ON for at least 30 seconds
- heat mode is not active and the time guard between modes equals zero.
- mode is occupied or the Temperature Compensated Start or Cool mode is active
- SPT reading is available and > (OCSP + STO)
- If mode is unoccupied and the SPT > (UCSP + Unoccupied Cooling Deadband). The indoor fan will be turned on by the staging algorithm.
- OAT > DXLOCK or OAT DX Lockout is disabled

If all of the above conditions are met, the CCSR will be calculated, otherwise it is set to its maximum value and DX stages is set to 0. If only the last condition is not true and an economizer is available, it will be used to cool the space.

The submaster loop uses the CCSR compared to the actual SAT to determine the required number of capacity stages to satisfy the load. There is a programmable minimum internal time delay of 3 to 5 minutes on and 2 to 5 minutes off for the compressors to prevent short cycling. There is also a 3-minute time delay before bringing on the second stage compressor. If the PremierLink controller is configured for Heat Pump and AUXOUT is configured for Reversing Valve Cool, the H3_EX_RV output will energize 2 seconds after the first compressor is energized and stay energized until there is a demand for heat. If AUXOUT is configured for Reversing Valve Heat, then the H3_EX_RV contact will be deenergized when there is a demand for cooling. An internal 5 to 10-minute user-programmable time guard between modes prevents rapid cycling between modes when used in a single zone application. The Time Guard is lowered to 3 minutes when Linkage is active to allow the 3V™ linkage coordinator to have better control of the Premier-Link controller when used as the air source for the 3V control system.

Table 23 indicates the number of stages available. The staging algorithm looks at the number of stages available based the number of cool stages configured in the SERVICE configuration table. The algorithm will skip the economizer if it is not available and turn on a compressor.

Table 23 – Available Cooling Stages

NUMBER OF STAGES	0	1 (ECONOMIZER*)	2	3
Compressor 1	Off	Off	On	On
Compressor 2	Off	Off	Off	On

* If conditions are suitable for economizer operation.

Any time the compressors are running, the PremierLink controller will lockout the compressors if the SAT becomes too low. These user configurable settings are found in the SERVICE configuration table:

Compressor 1 Lockout at SAT < SATLO1 (50 to 65°F) (default is 55°F)

Compressor 2 Lockout at SAT < SATLO2 (45 to 55°F) (default is 50°F)

After a compressor is locked out, it may be started again after a normal time-guard period and the supply air temperature has increased at least 8°F above the lockout setpoint.

Dehumidification — The PremierLink controller will provide occupied and unoccupied dehumidification control when AUXOUT = 5 in the CONFIG table and is installed on HVAC units that are equipped with additional controls and accessories to accomplish this function. This function also requires a space relative humidity sensor be installed on the OAQ/IRH input.

When in the occupied mode and the indoor relative humidity is greater then the Occupied High Humidity setpoint, then the H3_EX_RV output point will be energized. When in the unoccupied mode and indoor relative humidity is greater then the Unoccupied High Humidity setpoint, then the H3_EX_RV output point and supply fan output will be energized. There is a fixed 5% hysteresis that the indoor relative humidity must drop below the active setpoint to end the dehumidification mode and deenergize the H3_EX_RV output. If the PremierLink controller is in the unoccupied mode, then the fan relay will deenergize if there is no other mode requiring to the fan to be on. This function will not energize mechanical cooling as a result of the indoor relative humidity exceeding either setpoint.

A high humidity alarm will be generated if the indoor relative humidity exceeds the high humidity setpoint by the amount configured in the Control Humidity Hysteresis in the ALARMS table for 20 minutes. The alarm will return to normal when the indoor relative humidity drops 3% below the active humidity setpoint.

Economizer — The economizer dampers are used to provide free cooling and indoor air quality if optional CO2 sensor is installed and when the outside conditions are suitable. Temperature control is accomplished by controlling the SAT to a certain level determined by the Economizer PID Loop by calculating a submaster reference (ECONSR) value. This algorithm will calculate the submaster reference temperature (ECONSR) based on OAT and enthalpy conditions and cooling requirements. The ECONSR value is then passed to the Economizer Submaster Loop, which will modulate dampers to maintain SAT at ECONSR level.

The following conditions are required to determine if economizer cooling is possible:

- Indoor fan has been on for at least 30 seconds
- Enthalpy is low
- SAT reading is available
- OAT reading is available
- SPT reading is available
- OAT ≤ SPT
- OAT < OATMAX (OATMAX default is 75°F)
- Economizer position is NOT forced

If any of the above conditions are not met, the ECONSR will be set to its MAX limit of 120°F and the damper will go to its configured minimum position. The minimum damper position can be overridden by the IAQ routine described later in this section.

The calculation for ECONSR is as follows:

ECONSR = PID function on (setpoint - SPT), where:

setpoint = ((OCSP+STO) + (OHSP+STO))/2 when NTLO (Unoccupied Free Cool OAT Lockout) < OAT < 68°F

setpoint = (OCSP+STO) - 1 when OAT ≤ NTLO

setpoint = (OHSP+STO) + 1 when OAT ≥ 68°F

The actual damper position (ECONPOS) is the result of the following calculation. Values represented in the right side of the equation can be found in the SERVICE configuration table descriptions in this manual. Note that

that the OAT is taken into consideration to avoid large changes in damper position when the OAT is cold:

ECONPOS = SubGain x (ECONSR-SAT) + CTRVAL
where SubGain = (OAT - TEMPBAND) / (ESG + 1)

If the OAT < DXLOCK (DX Cool Lockout setpoint) then the damper will be modulated to maintain the SAT at the ECONSR value.

If the OAT is between DXLOCK and 68°F (DXLOCK < OAT < 68°F) and additional cooling is required, the economizer will close the to minimum position for three minutes, the economizer integrator will then be reset to 0 and begin modulating to maintain the SASP after the stage has been energized for about 90 seconds. This will allow the economizer to calculate a new ECONSR that takes into account the cooling effect that has just been turned on and not return to the value require before the cooling was added. This will prevent the economizer from causing premature off cycles of compressors while maintaining the low SAT temperature setpoint for the number of stages active. In addition to preventing compressor short cycling, by using return air across the evaporator coil just after the compressor has started allows for increased refrigerant flow rates providing for better oil return of any oil washed out during compressor start-up.

If the OAT > 68°F and OAT < SPT and the number of DX stages requested is > 0 by the staging algorithm, then ECONSR is set to its minimum value 48°F and the damper will go to 100% open.

If the Auxiliary Relay is configured for exhaust fan (AUXOUT = 1) in the CONFIG configuration table and Continuous Power Exhaust (MODPE) is Enable in the SERVICE configuration table, then the AUXO output (HS3) will be energized whenever the PremierLink controller is in the occupied mode. If the MODPE is disabled then AUXO output will be energized based on the Power Exhaust Setpoint (PES) in the SETPOINT table.

Heating — The heat stages are controlled by the Heating Control Loop, which is used to calculate the desired SAT needed to satisfy the space. It will compare the SPT to the Occupied Heat Setpoint (OHSP) + the T56 slider offset (STO) when occupied and the Unoccupied Heat Setpoint (UHSP - Unoccupied Heating Deadband) if unoccupied to calculate a Staged Heat Submaster Reference (SHSR). The heat staging algorithm compares the SHSR to the actual SAT to calculate the required number of heating stages to satisfy the load. This loop runs every 40 seconds. The following conditions must be met in order for this algorithm to run:

- Indoor fan has been ON for at least 30 seconds.
- Cool mode is not active and the time guard between modes equals zero.
- Mode is occupied or the Temperature Compensated Start or Heat mode is active.
- SPT reading is available and < (OHSP + STO).
- If it is unoccupied and the SPT < (UHSP - Unoccupied Heating Deadband). The indoor fan will be turn on by the staging algorithm.

When all of the above conditions are met, the SHSR is calculated and up to 3 stages of heat will turned on and off to satisfy to maintain the SAT = SHSR. If any of the above conditions are not met, the SHSR is set to its minimum value of 35°F.

The Staged Heat Submaster Reference (SHSR) is calculated as follows:

SHSR = Heating PID function on (error) where error = (OHSP + STO) - Space Temperature

The Maximum SHSR is determined by the SATHI configuration. If the supply-air temperature exceeds the SATHI configuration value, then the heat stages will turn off. Heat staging will resume after a delay to allow the supply-air temperature to drop below the SATHI value.

The maximum number of stages available is dependent on the type of heat and the number of stages programmed in the CONFIG and SERVICE configuration tables. Staging will occur as follows for gas electric units, Carrier heat pumps with a defrost board, or cooling units with electric heat:

For Heating PID STAGES = 2
HEAT STAGES = 1 (50% capacity) - energize HS1.
HEAT STAGES = 2 (100% capacity) - energize HS2.
For Heating PID STAGES = 3 and AUXOUT = HS3
HEAT STAGES = 1 (33% capacity if) - energize HS1
HEAT STAGES = 2 (66% capacity) - energize HS2
HEAT STAGES = 3 (100% capacity) - energize HS3

Staging will occur as follows For heat pump units with AUXOUT configured as reversing valve:

For Heating PID STAGES = 2 and AUXOUT = Reversing Valve Heat (the H3_EX_RV output will stay energized until there is a cool demand) HEAT STAGES = 1 (50% capacity) shall energize CMP1, CMP2, RVS.

HEAT STAGES = 2 (100% capacity) shall energize HS1 and HS2.

Heating PID STAGES = 3 and AUXOUT = Reversing Valve Heat (the H3_EX_RV output will stay energized until there is a cool demand)

HEAT STAGES = 1 (33% capacity if) shall energize CMP1, CMP2, RVS

HEAT STAGES = 2 (66% capacity) shall energize HS1

HEAT STAGES = 3 (100% capacity) shall energize HS2

If AUXOUT is configured for Reversing Valve Cool, then the H3_EX_RV contact will be deenergized when there is a demand for heating. The heat stages will be cycled to temper the SAT so that it will be between the SPT and the SPT + 10°F (SPT < SAT < (SPT + 10°F)) if:

- the number of heat stages calculated is zero
- the OAT < 55°F
- an IAQ sensor is installed

- the IAQ Minimum Damper Position > minimum damper position
- and the SAT < SPT -10°F.

There is also a SAT tempering routine that will act as SAT low limit safety to prevent the SAT from becoming too cold should the economizer fail to close. One stage of heating will be energized if it is not in the Cooling or Free Cooling mode and the OAT is below 55°F and the SAT is below 40°F. It will deenergize when the SAT > (SPT + 10°F).

Indoor Air Quality — If the optional indoor air quality (IAQI) sensor is installed, the PremierLink controller will maintain indoor air quality within the space at the user configured differential setpoint (IAQD) in the CONFIG configuration table. The setpoint is the difference between the IAQI and an optional outdoor air quality sensor (OAQ). If the OAQ is not present then a fixed value of 400 ppm is used. The actual space IAQ setpoint (IAQS) is calculated as follows:

IAQS = IAQD + OAQ (OAQ = 400 ppm if not present)

As air quality within the space changes, the minimum position of the economizer damper will be changed also thus allowing more or less outdoor air into the space depending on the relationship of the IAQI to the IAQS. The IAQ algorithm runs every 30 seconds and calculates IAQ minimum position value using a PID loop on the IAQI deviation from the IAQS. The IAQ minimum position is then compared against the user configured minimum position (MDP) and the greatest value becomes the final minimum damper position (IQMP). If the calculated IAQ minimum position is greater than the IAQ maximum damper position (IAQMAXP) decision in the SERVICE configuration table, then it will be clamped to IAQMAXP value.

If IAQ is configured for low priority, the positioning of the economizer damper can be overridden by comfort requirements. If the SPT > OCSP + 2.5 or the SPT < OHSP - 2.5 then IAQ minimum position becomes 0 and the IQMP = MDP. The IAQ mode will resume when the SPT ≤ OCSP + 1.0 and SPT ≥ OHSP - 1.0.

If IAQ is configured for high priority and the OAT < 55°F and the SAT < (SPT - 10°F), the algorithm will enable the heat stages to maintain the SAT between the SPT and the SPT + 10°F.

IAQ Pre-Occupancy Purge — This function is designed to purge the space of airborne contaminants that may have accumulated 2 hours prior to the beginning of the next occupied period. The maximum damper position that will be used is temperature compensated for cold whether conditions and can be pre-empted by Temperature Compensated Start function. For pre-occupancy to occur, the following conditions must be met:

- IAQ Pre-Occupancy Purge option is enabled in the CONFIG configuration table
- Unit is in the unoccupied state
- Current Time is valid
- Next Occupied Time is valid
- Time is within 2 hours of next Occupied period
- Time is within Purge Duration (user-defined 5 to 60 minutes in the CONFIG configuration table)
- OAT Reading is available

If all of the above conditions are met, the economizer damper IQMP is temporarily overridden by the pre-occupancy damper position (PURGEMP). The PURGEMP will be set to one of the following conditions based on atmospheric conditions and the space temperature:

- If the OAT ≥ NTLO (Unoccupied OAT Lockout Temperature) and OAT < 65°F and OAT is less than or equal to OCSP and Enthalpy = Low then PURGEMP = 100%.
- If the OAT < NTLO then PURGEMP = LTMP (Low Temperature Minimum Position - defaults to 10%)
- If the OAT > 65°F or (OAT ≥ NTLO and OAT > OCSP) or Enthalpy = High then PURGEMP = HTMP (High Temperature Minimum Position defaults to 35%).

The LTMP and HTMP are user adjustable values from 0 to 100% in the SETPOINT table. Whenever PURGEMP results in a number greater than 0%, the IAQ pre-occupancy purge mode will be enabled turning on the Indoor Fan Relay and setting the economizer IQMP to the PURGEMP value. When IAQ pre-occupancy mode is not active PURGEMP = 0%.

Unoccupied Free Cooling — Unoccupied free cool function will start the indoor fan during unoccupied times in order to cool the space with outside air. This function is performed to delay the need for mechanical cooling when the system enters the occupied period. Depending on how Unoccupied Free Cooling is configured, unoccupied mode can occur at any time in the unoccupied time period or 2 to 6 hours prior to the next occupied time. Once the space has been sufficiently cooled during this cycle, the fan will be stopped. In order to perform unoccupied free cooling all of the following conditions must be met:

- NTEN option is enabled in the CONFIG configuration table
- Unit is in unoccupied state
- Current time of day is valid
- Temperature Compensated Start mode is not active
- COOL mode is not active
- HEAT mode is not active
- SPT reading is available
- OAT reading is available
- Enthalpy is low
- OAT > NTLO (with 1°F hysteresis) and < Max Free Cool

setpoint

If any of the above conditions are not met, Unoccupied Free Cool mode will be stopped, otherwise, the mode will be controlled as follows:

The NTFC setpoint (NTSP) is determined as NTSP = (OCSP + OHSP) / 2

The Unoccupied Free Cool mode will be started when:

SPT > (NTSP + 2°F) and SPT > (OAT + 8°F)

The Unoccupied Free Cool mode will be stopped when:

SPT < NTSP or SPT < (OAT + 3°F)

Temperature Compensated Start — This function will run when the controller is in unoccupied state and will calculate early start bias time (SBT) based on space temperature deviation from occupied setpoints in minutes per degree. The following conditions will be met for the function to run:

- Unit is in unoccupied state
- Next occupied time is valid
- Current time of day is valid
- Valid space temperature reading is available (from sensor or linkage thermostat)
- Cool Start Bias (KCOOL) and Heat Bias Start (KHEAT) > 0 in the CONFIG configuration table

The SBT is calculated by one of the following formulas depending on temperature demand:

If SPT > OCSP then SBT = (SPT - OCSP) * KCOOL

If SPT < OHSP then SPT = (OHSP - SPT) * KHEAT.

The calculated start bias time can range from 0 to 255 minutes. When SBT is greater than 0 the function will subtract the SBT from the next occupied time to calculate a new start time. When a new start time is reached, the Temperature Compensated Start mode is started. This mode energizes the fan and the unit will operate as though it is in occupied state. Once set, Temperature Compensated Start mode will stay on until the unit returns to occupied state. If either Unoccupied Free Cool or IAQ Pre-Occupancy mode is active when Temperature Compensated Start begins, their mode will end.

Door Switch — The Door Switch function is designed to disable mechanical heating and cooling outputs when the REMOCC contact input is closed (in the ON state) after a programmed time delay. The fan will continue to operate based on the current mode and the ASHRAE 90.1 Supply Fan setting. The delay is programmable from 2 to 20 minutes by setting the Remote Cont/Door Switch decision in the SERVICE table to a value equal to the number of minutes desired. When the contact is open (in the OFF state), the PremierLink controller will resume normal temperature control.

This application is designed for use in schools or other public places where a door switch can be installed to monitor the opening of a door for an extended period of time. The controller will disable mechanical cooling and heating when the door is open for a programmed amount of time.

This function can also be used to monitor a high condensate level switch when installed on a water source heat pump to disable mechanic cooling in case of a plugged evaporator condensate pan drain.

Linkage — The Linkage function in the PremierLink controller is available for applications using a Linkage thermostat or the 3V control system. If using the Linkage thermostat, both the PremierLink controller and the stat must be on the same CCN bus. When used as the air source for a 3V control system, the PremierLink controller is not required to be on the same CCN bus but it is recommended. Linkage will be active when it is initiated from the Linkage thermostat or the 3V Linkage Coordinator through CCN communications and requires no configuration. Only one device can be linked to the PremierLink controller.

Once Linkage is active, the PremierLink controller's own SPT, temperature setpoints, and occupancy are ignored and the controller will use the information provided by the remote linkage device. The following information will be received from the remote linked device and can be viewed in the maintenance display table:

- Supervisory Element
- Supervisory Bus
- Supervisory Block
- Average Occupied Heat Setpoint
- Average Occupied Cool Setpoint
- Average Unoccupied Heat Setpoint
- Average Unoccupied Cool Setpoint
- Average Zone Temp
- Average Occupied Zone Temp
- Occupancy Status

In return, the PremierLink controller will provide its SAT and operating mode to the linked device.

It will convert its operating modes to Linkage modes. See Table 24.

Table 24 – Linkage Modes

ROOFTOP MODE	VALUE	LINKAGE MODE
Demand Limit	N/A	N/A
Heat	3	Heating
Cool or Free Cooling	4	Cooling
IAQ Control	N/A	N/A
Temp. Compensated Start Heat	2	Warm–up
Temp. Compensated Start Cool	4	Cooling
IAQ Purge	6	Pressurization
Occupied (Indoor Fan ON)	4	Cooling
Unoccupied Free Cool	5	Unoccupied Free Cooling
Fire Shutdown	7	Evac
Factory/Field Test	1	Off
Off	1	Off

The PremierLink controller will generate a Linkage Communication Failure alarm if a failure occurs for 5

consecutive minutes once a Linkage has previously been established. It will then revert back to its own SPT, setpoints and occupancy schedule for control. For this reason, Carrier strongly recommends that an SPT be installed in the space on open plenum systems or in the return air duct of ducted return air systems to provide continued backup operation. When Linkage communication is restored, the controller will generate a return to normal.

For more information on how the PremierLink controller is used in conjunction with the Carrier 3V control system, contact your CCN controls representative.

IMPORTANT: The PremierLink controller should not be used as a linked air source in a ComfortID™ VAV system. The ComfortID VAV system will NOT function correctly when applied with a PremierLink controller as the air source, resulting in poor comfort control and possible equipment malfunction.

NOTE: The PremierLink controller can be used as an air source in a 3V Pressure Independent (PI) System (a 3V Linkage Coordinator with ComfortID PI Zone Controllers), but it should not be used as an air source with ComfortID controllers unless a 3V zone controller is used as the Linkage Coordinator. Contact your Carrier CCN controls representative for assistance.

Demand Limit — If the demand limit option is enabled, the control will receive and accept Redline Alert and Loadshed commands from the CCN loadshed controller. When a redline alert is received, the control will set the maximum stage of capacity equal to the stage of capacity that the unit is operating at when the redline alert was initiated.

When loadshed command is received the control will reduce capacity as shown in Table 25.

Table 25 – Loadshed Command — Gas and Electric Heat Units

CURRENT CAPACITY	NEW CAPACITY
CMP1	DX Cooling OFF
CMP1+CMP2	CMP1
HS1	Heat OFF
HS1+HS2 (+HS3)	HS1

The controller will have a maximum demand limit timer of 1 hour that prevents the unit from staying in load shed or redline alert longer than 1 hour in the event the controller loses communication with the network load shed module. Should the maximum demand limit timer expire prior to receiving the loadshed device command from CCN, the control will stop demand limit mode and return to normal operation.

FASTENER TORQUE VALUES

See Table 26 for torque values.

Table 26 – Torque Values

Supply fan motor mounting	120 +/– 12 in–lbs
Supply fan motor adjustment plate	120 +/– 12 in–lbs
Motor pulley setscrew	72+/– 5 in–lbs
Fan pulley setscrew	72+/– 5 in–lbs
Blower wheel hub setscrew	72+/– 5 in–lbs
Bearing locking collar setscrew	65–70 in–lbs
Compressor mounting bolts	65–75 in–lbs
Condenser fan motor mounting bolts	20 +/– 2 in–lbs
Condenser fan hub setscrew	84 +/– 12 in–lbs

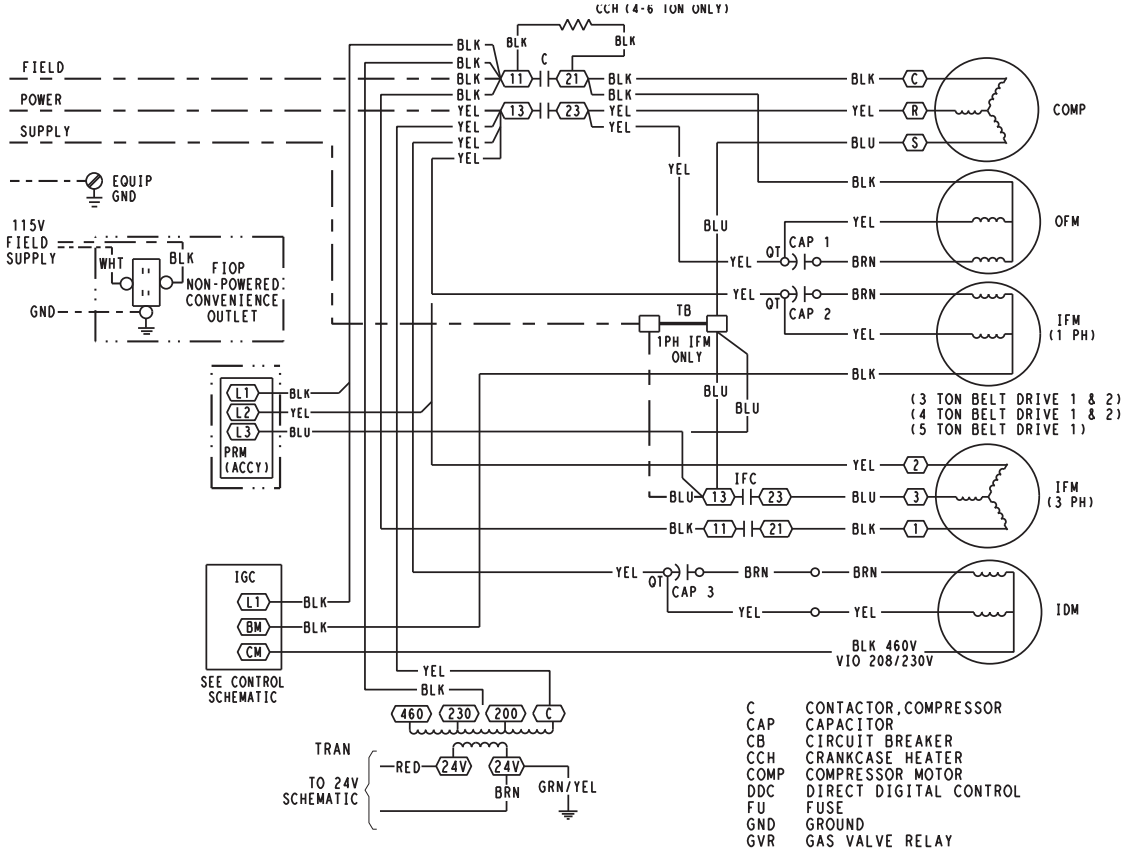

LEGEND

- MARKED WIRE
- TERMINAL (MARKED)
- TERMINAL (UNMARKED)
- TERMINAL BLOCK
- SPLICE
- SPLICE (MARKED)
- FACTORY WIRING
- FIELD CONTROL WIRING
- FIELD POWER WIRING
- CIRCUIT BOARD TRACE
- ACCESSORY OR OPTIONAL WIRING
- TO INDICATE COMMON POTENTIAL ONLY: NOT TO REPRESENT WIRING

NOTES

1. IF ANY OF THE ORIGINAL WIRE FURNISHED MUST BE REPLACED. IT MUST BE REPLACED WITH TYPE 90 C WIRE OR ITS EQUIVALENT.
2. COMPRESSOR AND FAN MOTORS ARE THERMALLY PROTECTED. THREE PHASE MOTORS ARE PROTECTED AGAINST PRIMARY SINGLE PHASING CONDITIONS.
3. 208/230V UNIT TRAN IS WIRED FOR 230V UNIT. IF UNIT IS TO BE RUN WITH 208V POWER SUPPLY DISCONNECT BLK WIRE FROM 230V TAP AND CONNECT TO 200V TAP.
4. USE COPPER, COPPER CLAD, ALUMINUM OR ALUMINUM CONNECTORS.
5. USE COPPER CONDUCTOR ONLY.

C	CONTACTOR,COMPRESSOR
CAP	CAPACITOR
CB	CIRCUIT BREAKER
CCH	CRANKCASE HEATER
COMP	COMPRESSOR MOTOR
DDC	DIRECT DIGITAL CONTROL
FU	FUSE
GND	GROUND
GVR	GAS VALVE RELAY
HPS	HIGH PRESSURE SWITCH
HS	HALL EFFECT SENSOR
I	IGNITOR
IAQ	INDOOR AIR QUALITY SENSORS
IFC	INDOOR FAN CONTACTOR
IFM	INDOOR FAN MOTOR
IGC	INTEGRATED GAS CONTROL
LA	LOW AMBIENT LOCKOUT
LPS	LOW PRESSURE SWITCH
LS	LIMIT SWITCH
MGV	MAIN GAS VALVE
OAT	OUTDOOR AIR TEMP. SEN
OFM	OUTDOOR FAN MOTOR
OLR	OVERLOAD RELAY
PL	PLUG ASSEMBLY
POT	POTENTIOMETER
PRM	PHASE MONITOR RELAY
QT	QUADRUPLE TERMINAL
R	RELAY
RAT	RETURN AIR TEMP. SEN
RS	ROLLOUT SWITCH
SAT	SUPPLY AIR TEMP. SEN
TB	TERMINAL BLOCK
TRAN	TRANSFORMER

C08308

Fig. 70 - 48TC Typical Unit Wiring diagram - Power (A06)

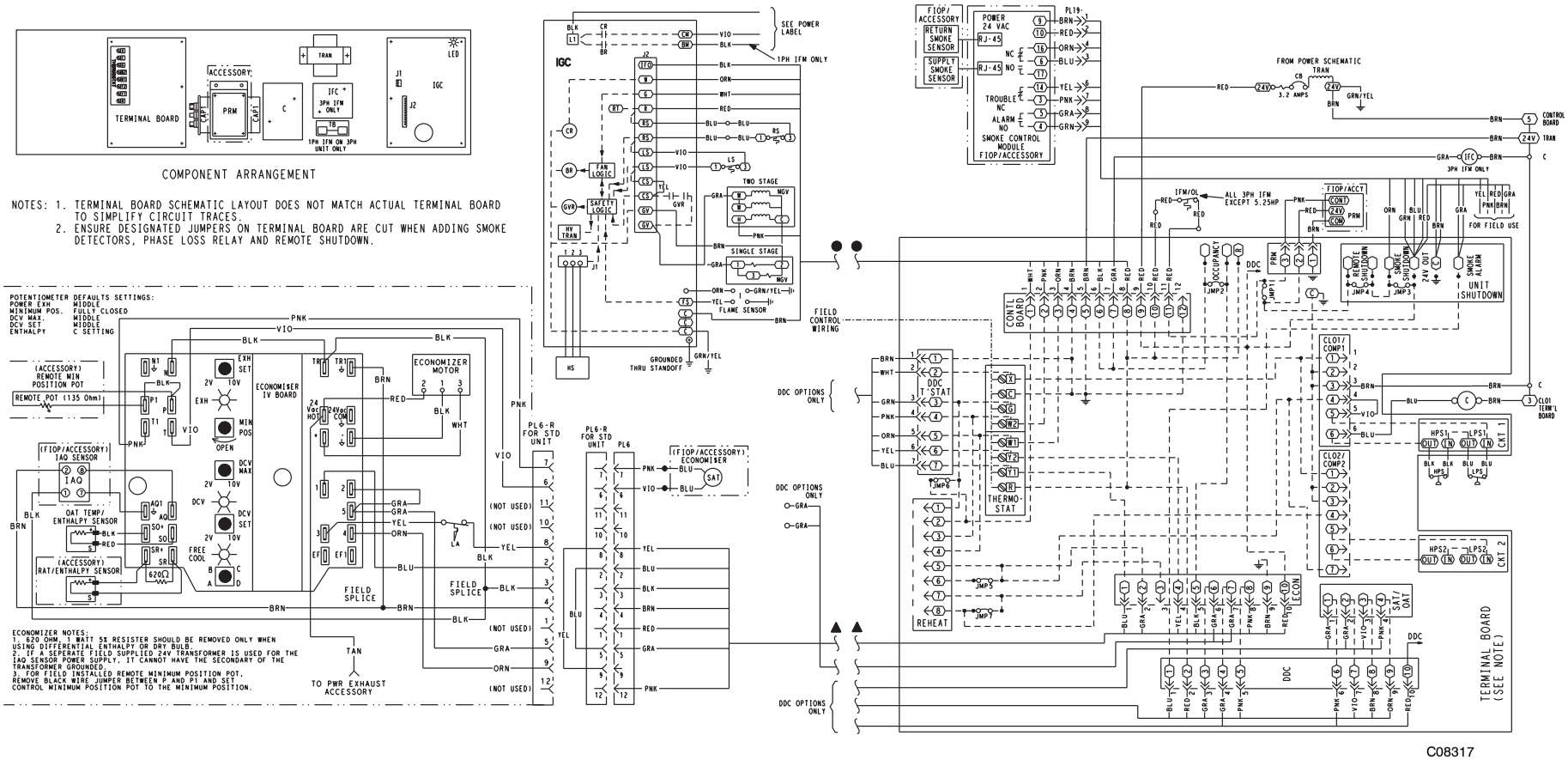

Fig. 71 - 48TC Unit Wiring Diagram - Control (A06)

APPENDIX I. MODEL NUMBER SIGNIFICANCE

Model Number Nomenclature

1	2	3	4	5	6	7	8	9	10	11	12	13	14	15	16	17	18
4	8	T	C	D	A	0	4	A	1	A	5	–	0	A	0	A	0

Unit Heat Type
48 = Gas heat pkg rooftop

Tier / Model
TC = Entry tier (with Puron refrigerant)

Heat Size
D = Low heat
E = Medium heat
F = High heat
L = Low NO_x, low heat
M = Low NO_x, medium heat
N = Low NO_x, high heat
S = Stainless steel, low heat
R = Stainless steel, medium heat
T = Stainless steel, high heat

Refrig. System Options
A = Standard refrigeration system

Cooling Tons
04 = 3 Ton
05 = 4 Ton
06 = 5 Ton
07 = 6 Ton
08 = 7.5 Ton
09 = 8.5 Ton
12 = 10 Ton

Sensor Options
A = None
B = RA smoke detector
C = SA smoke detector
D = RA & SA smoke detector
E = CO_2 sensor[1]
F = RA smoke detector & CO_2[1]
G = SA smoke detector & CO_2[1]
H = RA & SA smoke detector & CO_2[1]

Indoor Fan Options
1 = Standard static option
2 = Medium static option
3 = High static option

Coil Options (Outdoor Coil – Indoor Coil)
A = Al/Cu – Al/Cu
B = Precoat Al/Cu – Al/Cu
C = E coat Al/Cu – Al/Cu
D = E coat Al/Cu – E coat Al/Cu
E = Cu/Cu – Al/Cu
F = Cu/Cu – Cu/Cu
M = Al/Cu –Al/Cu – Louvered Hail Guards
N = Precoat Al/Cu – Al/Cu – Louvered Hail Guards
P = E coat Al/Cu – Al/Cu – Louvered Hail Guards
Q = E coat Al/Cu – E coat Al/Cu – Louvered Hail Guards
R = Cu/Cu – Al/Cu – Louvered Hail Guards
S = Cu/Cu – Cu/Cu – Louvered Hail Guards

Voltage
1 = 575/3/60
3 = 208–230/1/60
5 = 208–230/3/60
6 = 460/3/60

Design Rev
Factory assigned

Base Unit Controls
0 = Electromechanical
1 = PremierLink DDC controller
2 = RTU–MP multi protocol controller

Intake / Exhaust Options
A = None
B = Temp econo w/ baro relief
F = Enthalpy econo w/ baro relief

Service Options
0 = None
1 = Unpowered convenience outlet
2 = Powered convenience outlet

Electrical Options
A = None
C = Non–fused disc
D = Thru the base
F = Non–fused & thru the base

Brand / Packaging
0 = Standard
1 = LTL

[1] Future availability

Serial Number Format

POSITION NUMBER	1	2	3	4	5	6	7	8	9	10
TYPICAL	1	2	0	8	G	1	2	3	4	6

POSITION	DESIGNATES
1–2	Week of manufacture (fiscal calendar
3–4	Year of manufacture (“08” = 2008)
5	Manufacturing location (G = ETP, Texas, USA)
6–10	Sequential number

APPENDIX II. PHYSICAL DATA

Physical Data (Cooling) 3 - 6 TONS

	48TC**04	48TC**05	48TC**06	48TC**07
Refrigeration System				
# Circuits / # Comp. / Type	1 / 1 / Scroll	1 / 1 / Scroll	1 / 1 / Scroll	1 / 1 / Scroll
Puron (R–410a) charge A/B (lbs)	5.6	8.5	10.7	14.1
Oil A/B (oz)	25	42	42	56
Metering Device	Acutrol	Acutrol	Acutrol	Acutrol
High–press. Trip / Reset (psig)	630 / 505	630 / 505	630 / 505	630 / 505
Low–press. Trip / Reset (psig)	54 / 117	54 / 117	54 / 117	54 / 117
Evap. Coil				
Material	Cu / Al	Cu / Al	Cu / Al	Cu / Al
Coil type	3/8” RTPF	3/8” RTPF	3/8” RTPF	3/8” RTPF
Rows / FPI	2 / 15	2 / 15	4 / 15	4 / 15
Total Face Area (ft^2)	5.5	5.5	5.5	7.3
Condensate Drain Conn. Size	3/4”	3/4”	3/4”	3/4”
Evap. Fan and Motor				
Standard Static 1 phase				
Motor Qty / Drive Type	1 / Belt	1 / Belt	1 / Belt	–
Max BHP	1.2	1.2	1.2	–
RPM Range	560–854	560–854	770–1175	–
Motor Frame Size	48	48	48	–
Fan Qty / Type	1 / Centrifugal	1 / Centrifugal	1 / Centrifugal	–
Fan Diameter (in)	10 x 10	10 x 10	10 x 10	–
Standard Static 3 phase				
Motor Qty / Drive Type	1 / Belt	1 / Belt	1 / Belt	1 / Belt
Max BHP	1.2	1.2	1.2	2.4
RPM Range	560–854	560–854	770–1175	1073–1457
Motor Frame Size	48	48	48	56
Fan Qty / Type	1 / Centrifugal	1 / Centrifugal	1 / Centrifugal	1 / Centrifugal
Fan Diameter (in)	10 x 10	10 x 10	10 x 10	10 x 10
Medium Static 1 phase				
Motor Qty / Drive Type	1 / Belt	1 / Belt	1 / Belt	–
Max BHP	1.2	1.2	1.5	–
RPM Range	770–1175	770–1175	1035–1466	–
Motor Frame Size	48	56	56	–
Fan Qty / Type	1 / Centrifugal	1 / Centrifugal	1 / Centrifugal	–
Fan Diameter (in)	10 x 10	10 x 10	10 x 10	–
Medium Static 3 phase				
Motor Qty / Drive Type	1 / Belt	1 / Belt	1 / Belt	1 / Belt
Max BHP	1.2	1.2	2.4	2.9
RPM Range	770–1175	770–1175	1035–1466	1173–1788
Motor Frame Size	48	48	56	56
Fan Qty / Type	1 / Centrifugal	1 / Centrifugal	1 / Centrifugal	1 / Centrifugal
Fan Diameter (in)	10 x 10	10 x 10	10 x 10	10 x 10
High Static 3 phase				
Motor Qty / Drive Type	1 / Belt	1 / Belt	1 / Belt	1 / Belt
Max BHP	2.4	2.4	2.9	3.7
RPM Range	1035–1466	1035–1466	1303–1687	1474–1788
Motor Frame Size	56	56	56	56
Fan Qty / Type	1 / Centrifugal	1 / Centrifugal	1 / Centrifugal	1 / Centrifugal
Fan Diameter (in)	10 x 10	10 x 10	10 x 10	10 x 10
Cond. Coil				
Material	Cu / Al	Cu / Al	Cu / Al	Cu / Al
Coil type	3/8” RTPF	3/8” RTPF	3/8” RTPF	3/8” RTPF
Rows / FPI	1 / 17	2 / 17	2 / 17	2 / 17
Total Face Area (ft^2)	14.6	12.6	16.5	21.3
Cond. fan / motor				
Qty / Motor Drive Type	1/ Direct	1/ Direct	1/ Direct	1/ Direct
Motor HP / RPM	1/4 / 1100	1/4 / 1100	1/4 / 1100	1/4 / 1100
Fan diameter (in)	22	22	22	22
Filters				
RA Filter # / Size (in)	2 / 16 x 25 x 2	2 / 16 x 25 x 2	2 / 16 x 25 x 2	4 / 16 x 16 x 2
OA inlet screen # / Size (in)	1 / 20 x 24 x 1	1 / 20 x 24 x 1	1 / 20 x 24 x 1	1 / 20 x 24 x 1

Physical Data (Heating) 3 - 6 TONS

	48TC**04	48TC**05	48TC**06	48TC**07
Gas Connection				
# of Gas Valves	1	1	1	1
Connection size	1/2” NPT	1/2” NPT	1/2” NPT	1/2” NPT
Nat. gas supply line press (in. w.g.)/(PSIG)	5–13 / 0.18–0.47	5–13 / 0.18–0.47	5–13 / 0.18–0.47	5–13 / 0.18–0.47
LP supply line press (in. w.g.)/(PSIG)	11–13 / 0.40–0.47	11–13 / 0.40–0.47	11–13 / 0.40–0.47	11–13 / 0.40–0.47
Heat Anticipator Setting (Amps)				
1st stage	0.14	0.14	0.14	0.14
2nd stage	0.14	0.14	0.14	0.14
Natural Gas Heat				
LOW # of stages / # of burners (total)	1 / 2	1 / 2	1 / 2	1 / 2
LOW Rollout switch opens / Closes	195 / 115	195 / 115	195 / 115	195 / 115
LOW Temperature rise	25 / 55	25 – 55	25 – 55	25 – 55
MED # of stages / # of burners (total)	1 or 2 / 3	1 / 3	1 / 3	1 / 3
MED Rollout switch opens / Closes	195 / 115	195 / 115	195 / 115	195 / 115
MED Temperature rise	55 / 85	35 / 65	35 / 65	35 / 65
HIGH # of stages / # of burners (total)	–	1 or 2 / 3	1 or 2 / 3	1 or 2 / 3
HIGH Rollout switch opens / Closes	–	195 / 115	195 / 115	195 / 115
HIGH Temperature rise	–	50 / 80	50 / 80	50 / 80
Liquid Propane Heat				
LOW # of stages / # of burners (total)	1 / 2	1 / 2	1 / 2	1 / 2
LOW Rollout switch opens / Closes	195 / 115	195 / 115	195 / 115	195 / 115
LOW Temperature rise	25 / 55	25 – 55	25 – 55	25 – 55
MED # of stages / # of burners (total)	1 or 2 / 3	1 or 2 / 3	1 or 2 / 3	1 or 2 / 3
MED Rollout switch opens / Closes	195 / 115	195 / 115	195 / 115	195 / 115
MED Temperature rise	55 / 85	35 / 65	35 / 65	35 / 65
HIGH # of stages / # of burners (total)	–	1 or 2 / 3	1 or 2 / 3	1 or 2 / 3
HIGH Rollout switch opens / Closes	–	195 / 115	195 / 115	195 / 115
HIGH Temperature rise	–	50 / 80	50 / 80	50 / 80
Low NO_x Gas Heat				
LOW # of stages / # of burners (total)	1 / 2	1 / 2	1 / 2	–
LOW Rollout switch opens / Closes	195 / 115	195 / 115	195 / 115	–
LOW Temperature rise	20 / 50	20 / 50	20 / 50	–
MED # of stages / # of burners (total)	1 / 3	1 / 3	1 / 3	–
MED Rollout switch opens / closes	195 / 115	195 / 115	195 / 115	–
MED Temperature rise	30 / 60	30 / 60	30 / 60	–
HIGH # of stages / # of burners (total)	–	1 / 3	1 / 3	–
HIGH Rollout switch opens / Closes	–	195 / 115	195 / 115	–
HIGH Temperature rise	–	40 / 70	40 / 70	–

APPENDIX III. FAN PERFORMANCE

General Fan Performance Notes:

1. Interpolation is permissible. Do not extrapolate.
2. External static pressure is the static pressure difference between the return duct and the supply duct plus the static pressure caused by any FIOPs or accessories.
3. Tabular data accounts for pressure loss due to clean filters, unit casing, and wet coils. Factory options and accessories may add static pressure losses. Selection software is available, through your salesperson, to help you select the best motor/drive combination for your application.
4. The Fan Performance tables offer motor/drive recommendations. In cases when two motor/drive combinations would work, Carrier recommended the lower horsepower option.
5. For information on the electrical properties of Carrier's motors, please see the Electrical information section of this book.
6. For more information on the performance limits of Carrier's motors, see the application data section of this book.

48TC**04 1 Phase 3 Ton Horizontal Supply

CFM	AVAILABLE EXTERNAL STATIC PRESSURE (in. wg)									
	0.2		0.4		0.6		0.8		1.0	
	RPM	BHP	RPM	BHP	RPM	BHP	RPM	BHP	RPM	BHP
	Field–Supplied Drive[1]		Standard Static Option				Medium Static Option			
900	**553**	**0.14**	681	0.22	782	0.32	870	0.42	948	0.53
975	575	0.16	700	0.25	801	0.35	888	0.46	965	0.57
1050	597	0.18	720	0.28	820	0.38	906	0.49	983	0.61
1125	620	0.21	741	0.31	839	0.42	925	0.54	1001	0.66
1200	643	0.23	762	0.34	859	0.46	944	0.58	1020	0.71
1275	667	0.27	783	0.38	879	0.50	963	0.63	1038	0.76
1350	691	0.30	805	0.42	900	0.55	983	0.68	1057	0.82
1425	715	0.34	827	0.47	920	0.60	1002	0.74	1076	0.88
1500	740	0.38	849	0.52	941	0.66	1023	0.80	1096	0.95

CFM	AVAILABLE EXTERNAL STATIC PRESSURE (in. wg)									
	1.2		1.4		1.6		1.8		2.0	
	RPM	BHP	RPM	BHP	RPM	BHP	RPM	BHP	RPM	BHP
	Medium Static Option						Field–Supplied Drive[2]			
900	1019	0.64	1084	0.76	1146	0.89	**1203**	**1.02**	**1258**	**1.16**
975	1036	0.69	1101	0.81	**1162**	**0.94**	**1219**	**1.08**	–	–
1050	1053	0.74	1118	0.86	**1179**	**1.00**	**1236**	**1.14**	–	–
1125	1071	0.79	1135	0.92	**1196**	**1.06**	**1253**	**1.20**	–	–
1200	1089	0.84	1153	0.98	**1213**	**1.12**	–	–	–	–
1275	1107	0.90	**1171**	**1.04**	**1231**	**1.19**	–	–	–	–
1350	1126	0.96	**1189**	**1.11**	–	–	–	–	–	–
1425	1144	1.03	**1208**	**1.18**	–	–	–	–	–	–
1500	**1163**	**1.10**	–	–	–	–	–	–	–	–

NOTE: For more information, see General Fan Performance Notes on page 64.
Boldface indicates field–supplied drive is required.
1. Recommend using field–supplied fan pulley (part number KR11AG006) and belt (part number KR30AE039).
2. Recommend using field–supplied motor pulley (part number KR11HY161) and belt (part number KR30AE035).

48TC**04 1 Phase 3 Ton Vertical Supply

CFM	AVAILABLE EXTERNAL STATIC PRESSURE (in. wg)									
	0.2		0.4		0.6		0.8		1.0	
	RPM	BHP	RPM	BHP	RPM	BHP	RPM	BHP	RPM	BHP
	Field–Supplied Drive[1]		Standard Static Option				Medium Static Option			
900	**567**	**0.15**	688	0.22	786	0.30	871	0.37	947	0.44
975	591	0.17	710	0.26	807	0.34	891	0.42	966	0.49
1050	615	0.20	732	0.29	828	0.38	911	0.47	985	0.55
1125	641	0.23	755	0.33	849	0.42	931	0.52	1005	0.61
1200	666	0.26	778	0.37	871	0.47	952	0.57	1025	0.67
1275	693	0.29	802	0.41	893	0.53	974	0.63	1046	0.74
1350	719	0.33	826	0.46	916	0.58	995	0.70	1067	0.81
1425	746	0.38	850	0.51	939	0.64	1017	0.76	1088	0.89
1500	773	0.42	875	0.57	963	0.70	1040	0.84	1110	0.96

CFM	AVAILABLE EXTERNAL STATIC PRESSURE (in. wg)									
	1.2		1.4		1.6		1.8		2.0	
	RPM	BHP	RPM	BHP	RPM	BHP	RPM	BHP	RPM	BHP
	Medium Static Option						Field–Supplied Drive[2]			
900	1016	0.51	1080	0.57	1139	0.64	**1195**	**0.71**	**1249**	**0.77**
975	1034	0.57	1098	0.64	1157	0.72	**1213**	**0.79**	**1266**	**0.86**
1050	1053	0.63	1116	0.71	**1176**	**0.79**	**1231**	**0.87**	**1284**	**0.95**
1125	1073	0.70	1135	0.79	**1194**	**0.87**	**1250**	**0.96**	**1302**	**1.04**
1200	1093	0.77	1155	0.87	**1213**	**0.96**	**1268**	**1.05**	**1321**	**1.14**
1275	1113	0.85	1174	0.95	**1232**	**1.05**	**1287**	**1.15**	–	–
1350	1133	0.92	**1194**	**1.03**	**1252**	**1.14**	–	–	–	–
1425	1154	1.01	**1215**	**1.12**	–	–	–	–	–	–
1500	**1175**	**1.09**	–	–	–	–	–	–	–	–

NOTE: For more information, see General Fan Performance Notes on page 64.
Boldface indicates field–supplied drive is required.
1. Recommend using field–supplied fan pulley (part number KR11AG006) and belt (part number KR30AE039).
2. Recommend using field–supplied motor pulley (part number KR11HY161) and belt (part number KR30AE035).

48TC**04 3 Phase 3 Ton Horizontal Supply

CFM	AVAILABLE EXTERNAL STATIC PRESSURE (in. wg)									
	0.2		0.4		0.6		0.8		1.0	
	RPM	BHP	RPM	BHP	RPM	BHP	RPM	BHP	RPM	BHP
	Field–Supplied Drive[1]		Standard Static Option				Medium Static Option			
900	**553**	**0.14**	681	0.22	782	0.32	870	0.42	948	0.53
975	575	0.16	700	0.25	801	0.35	888	0.46	965	0.57
1050	597	0.18	720	0.28	820	0.38	906	0.49	983	0.61
1125	620	0.21	741	0.31	839	0.42	925	0.54	1001	0.66
1200	643	0.23	762	0.34	859	0.46	944	0.58	1020	0.71
1275	667	0.27	783	0.38	879	0.50	963	0.63	1038	0.76
1350	691	0.30	805	0.42	900	0.55	983	0.68	1057	0.82
1425	715	0.34	827	0.47	920	0.60	1002	0.74	1076	0.88
1500	740	0.38	849	0.52	941	0.66	1023	0.80	1096	0.95

CFM	AVAILABLE EXTERNAL STATIC PRESSURE (in. wg)									
	1.2		1.4		1.6		1.8		2.0	
	RPM	BHP	RPM	BHP	RPM	BHP	RPM	BHP	RPM	BHP
	Medium Static Option						High Static Option			
900	1019	0.64	1084	0.76	1146	0.89	1203	1.02	1258	1.16
975	1036	0.69	1101	0.81	1162	0.94	1219	1.08	1274	1.22
1050	1053	0.74	1118	0.86	1179	1.00	1236	1.14	1290	1.28
1125	1071	0.79	1135	0.92	1196	1.06	1253	1.20	1307	1.35
1200	1089	0.84	1153	0.98	1213	1.12	1270	1.27	1324	1.42
1275	1107	0.90	1171	1.04	1231	1.19	1287	1.34	1341	1.50
1350	1126	0.96	1189	1.11	1249	1.26	1305	1.42	1358	1.58
1425	1144	1.03	1208	1.18	1267	1.34	1323	1.50	1376	1.66
1500	1163	1.10	1226	1.25	1285	1.41	1341	1.58	1394	1.75

NOTE: For more information, see General Fan Performance Notes on page 64.
1. Recommend using field–supplied drive (part number KR11AG006) and belt (part number KR30AE039)

48TC**04 3 Phase 3 Ton Vertical Supply

CFM	AVAILABLE EXTERNAL STATIC PRESSURE (in. wg)									
	0.2		0.4		0.6		0.8		1.0	
	RPM	BHP	RPM	BHP	RPM	BHP	RPM	BHP	RPM	BHP
	Field–Supplied Drive[1]		Standard Static Option				Medium Static Option			
900	**567**	**0.15**	688	0.22	786	0.30	871	0.37	947	0.44
975	591	0.17	710	0.26	807	0.34	891	0.42	966	0.49
1050	615	0.20	732	0.29	828	0.38	911	0.47	985	0.55
1125	641	0.23	755	0.33	849	0.42	931	0.52	1005	0.61
1200	666	0.26	778	0.37	871	0.47	952	0.57	1025	0.67
1275	693	0.29	802	0.41	893	0.53	974	0.63	1046	0.74
1350	719	0.33	826	0.46	916	0.58	995	0.70	1067	0.81
1425	746	0.38	850	0.51	939	0.64	1017	0.76	1088	0.89
1500	773	0.42	875	0.57	963	0.70	1040	0.84	1110	0.96

CFM	AVAILABLE EXTERNAL STATIC PRESSURE (in. wg)									
	1.2		1.4		1.6		1.8		2.0	
	RPM	BHP	RPM	BHP	RPM	BHP	RPM	BHP	RPM	BHP
	Medium Static Option						High Static Option			
900	1016	0.51	1080	0.57	1139	0.64	1195	0.71	1249	0.77
975	1034	0.57	1098	0.64	1157	0.72	1213	0.79	1266	0.86
1050	1053	0.63	1116	0.71	1176	0.79	1231	0.87	1284	0.95
1125	1073	0.70	1135	0.79	1194	0.87	1250	0.96	1302	1.04
1200	1093	0.77	1155	0.87	1213	0.96	1268	1.05	1321	1.14
1275	1113	0.85	1174	0.95	1232	1.05	1287	1.15	1339	1.25
1350	1133	0.92	1194	1.03	1252	1.14	1307	1.25	1358	1.35
1425	1154	1.01	1215	1.12	1272	1.24	1326	1.35	1378	1.46
1500	1175	1.09	1235	1.22	1292	1.34	1346	1.46	1397	1.58

NOTE: For more information, see General Fan Performance Notes on page 64.
Boldface indicates field–supplied drive is required.
1. Recommend using field–supplied fan pulley (part number KR11AG006) and belt (part number KR30AE039).

48TC**05 1 Phase 4 Ton Horizontal Supply

CFM	AVAILABLE EXTERNAL STATIC PRESSURE (in. wg)									
	0.2		0.4		0.6		0.8		1.0	
	RPM	BHP	RPM	BHP	RPM	BHP	RPM	BHP	RPM	BHP
	Standard Static Option				Medium Static Option					
1200	643	0.23	762	0.34	859	0.46	944	0.58	1020	0.71
1300	675	0.28	790	0.40	886	0.52	969	0.65	1044	0.78
1400	707	0.33	819	0.45	913	0.58	996	0.72	1070	0.86
1500	740	0.38	849	0.52	941	0.66	1023	0.80	1096	0.95
1600	773	0.45	879	0.59	970	0.73	1050	0.88	1123	1.04
1700	807	0.52	910	0.67	999	0.82	1078	0.98	1150	1.14
1800	841	0.59	942	0.75	1029	0.91	1106	1.08	1177	1.25
1900	875	0.68	974	0.85	1059	1.02	1135	1.19	1205	1.37
2000	910	0.77	1006	0.95	1090	1.13	1165	1.31	1234	1.49

CFM	AVAILABLE EXTERNAL STATIC PRESSURE (in. wg)									
	1.2		1.4		1.6		1.8		2.0	
	RPM	BHP	RPM	BHP	RPM	BHP	RPM	BHP	RPM	BHP
	Medium Static Option				Field–Supplied Drive[1]					
1200	1089	0.84	1153	0.98	**1213**	**1.12**	–	–	–	–
1300	1113	0.92	**1177**	**1.06**	–	–	–	–	–	–
1400	1138	1.01	**1201**	**1.15**	–	–	–	–	–	–
1500	**1163**	**1.10**	–	–	–	–	–	–	–	–
1600	**1189**	**1.20**	–	–	–	–	–	–	–	–
1700	–	–	–	–	–	–	–	–	–	–
1800	–	–	–	–	–	–	–	–	–	–
1900	–	–	–	–	–	–	–	–	–	–
2000	–	–	–	–	–	–	–	–	–	–

NOTE: For more information, see General Fan Performance Notes on page 64.
Boldface indicates field–supplied drive is required.
1. Recommend using field–supplied motor pulley (part number KR11HY161) and belt (part number KR30AE035).

48TC**05 1 Phase 4 Ton Vertical Supply

CFM	AVAILABLE EXTERNAL STATIC PRESSURE (in. wg)									
	0.2		0.4		0.6		0.8		1.0	
	RPM	BHP	RPM	BHP	RPM	BHP	RPM	BHP	RPM	BHP
	Standard Static Option				Medium Static Option					
1200	666	0.26	778	0.37	871	0.47	952	0.57	1025	0.67
1300	701	0.31	810	0.43	901	0.54	981	0.65	1053	0.76
1400	737	0.36	842	0.49	931	0.62	1010	0.74	1081	0.86
1500	773	0.42	875	0.57	963	0.70	1040	0.84	1110	0.96
1600	810	0.49	909	0.65	994	0.79	1070	0.94	1140	1.08
1700	847	0.57	943	0.73	1027	0.89	1101	1.05	1170	1.20
1800	885	0.66	978	0.83	1060	1.00	1133	1.16	1200	1.32
1900	923	0.75	1014	0.94	1093	1.11	1165	1.29	1231	1.46
2000	962	0.85	1049	1.05	1127	1.24	1198	1.42	1263	1.61

CFM	AVAILABLE EXTERNAL STATIC PRESSURE (in. wg)									
	1.2		1.4		1.6		1.8		2.0	
	RPM	BHP	RPM	BHP	RPM	BHP	RPM	BHP	RPM	BHP
	Medium Static Option				Field–Supplied Drive[1]					
1200	1093	0.77	1155	0.87	**1213**	**0.96**	**1268**	**1.05**	**1321**	**1.14**
1300	1119	0.87	**1181**	**0.98**	**1239**	**1.08**	**1294**	**1.18**	–	–
1400	1147	0.98	**1208**	**1.09**	–	–	–	–	–	–
1500	**1175**	**1.09**	–	–	–	–	–	–	–	–
1600	–	–	–	–	–	–	–	–	–	–
1700	–	–	–	–	–	–	–	–	–	–
1800	–	–	–	–	–	–	–	–	–	–
1900	–	–	–	–	–	–	–	–	–	–
2000	–	–	–	–	–	–	–	–	–	–

NOTE: For more information, see General Fan Performance Notes on page 64.
Boldface indicates field–supplied drive is required.
1. Recommend using field–supplied motor pulley (part number KR11HY161) and belt (part number KR30AE035).

48TC**05 3 Phase 4 Ton Horizontal Supply

CFM	AVAILABLE EXTERNAL STATIC PRESSURE (in. wg)									
	0.2		0.4		0.6		0.8		1.0	
	RPM	BHP	RPM	BHP	RPM	BHP	RPM	BHP	RPM	BHP
	Standard Static Option				Medium Static Option					
1200	643	0.23	762	0.34	859	0.46	944	0.58	1020	0.71
1300	675	0.28	790	0.40	886	0.52	969	0.65	1044	0.78
1400	707	0.33	819	0.45	913	0.58	996	0.72	1070	0.86
1500	740	0.38	849	0.52	941	0.66	1023	0.80	1096	0.95
1600	773	0.45	879	0.59	970	0.73	1050	0.88	1123	1.04
1700	807	0.52	910	0.67	999	0.82	1078	0.98	1150	1.14
1800	841	0.59	942	0.75	1029	0.91	1106	1.08	1177	1.25
1900	875	0.68	974	0.85	1059	1.02	1135	1.19	1205	1.37
2000	910	0.77	1006	0.95	1090	1.13	1165	1.31	1234	1.49

CFM	AVAILABLE EXTERNAL STATIC PRESSURE (in. wg)									
	1.2		1.4		1.6		1.8		2.0	
	RPM	BHP	RPM	BHP	RPM	BHP	RPM	BHP	RPM	BHP
	Medium Static Option				High Static Option					
1200	1089	0.84	1153	0.98	1213	1.12	1270	1.27	1324	1.42
1300	1113	0.92	1177	1.06	1237	1.21	1293	1.36	1347	1.52
1400	1138	1.01	1201	1.15	1261	1.31	1317	1.47	1370	1.63
1500	1163	1.10	1226	1.25	1285	1.41	1341	1.58	1394	1.75
1600	1189	1.20	1252	1.36	1310	1.53	1365	1.70	1418	1.87
1700	1216	1.31	1277	1.48	1335	1.65	1390	1.83	1442	2.01
1800	1242	1.42	1303	1.60	1361	1.78	1415	1.96	1467	2.15
1900	1270	1.55	1330	1.73	1387	1.92	1441	2.11	**1493**	**2.30**
2000	1297	1.68	1357	1.87	1414	2.07	1467	2.26	–	–

NOTE: For more information, see General Fan Performance Notes on page 64.
Boldface indicates field–supplied drive is required.
1. Recommend using field–supplied fan pulley (part no. KR11AZ506), motor pulley (part no. KR11HY181) and belt (part no. KR30AE041).

48TC**05 3 Phase 4 Ton Vertical Supply

CFM	AVAILABLE EXTERNAL STATIC PRESSURE (in. wg)									
	0.2		0.4		0.6		0.8		1.0	
	RPM	BHP	RPM	BHP	RPM	BHP	RPM	BHP	RPM	BHP
	Standard Static Option				Medium Static Option					
1200	666	0.26	778	0.37	871	0.47	952	0.57	1025	0.67
1300	701	0.31	810	0.43	901	0.54	981	0.65	1053	0.76
1400	737	0.36	842	0.49	931	0.62	1010	0.74	1081	0.86
1500	773	0.42	875	0.57	963	0.70	1040	0.84	1110	0.96
1600	810	0.49	909	0.65	994	0.79	1070	0.94	1140	1.08
1700	847	0.57	943	0.73	1027	0.89	1101	1.05	1170	1.20
1800	885	0.66	978	0.83	1060	1.00	1133	1.16	1200	1.32
1900	923	0.75	1014	0.94	1093	1.11	1165	1.29	1231	1.46
2000	962	0.85	1049	1.05	1127	1.24	1198	1.42	1263	1.61

CFM	AVAILABLE EXTERNAL STATIC PRESSURE (in. wg)									
	1.2		1.4		1.6		1.8		2.0	
	RPM	BHP	RPM	BHP	RPM	BHP	RPM	BHP	RPM	BHP
	Medium Static Option				High Static Option					
1200	1093	0.77	1155	0.87	1213	0.96	1268	1.05	1321	1.14
1300	1119	0.87	1181	0.98	1239	1.08	1294	1.18	1346	1.28
1400	1147	0.98	1208	1.09	1265	1.21	1320	1.32	1371	1.43
1500	1175	1.09	1235	1.22	1292	1.34	1346	1.46	1397	1.58
1600	1204	1.21	1263	1.35	1320	1.48	1373	1.61	1424	1.74
1700	1233	1.34	1292	1.49	1348	1.63	1401	1.77	1451	1.91
1800	1262	1.48	1321	1.64	1376	1.79	1428	1.94	1479	2.09
1900	1293	1.63	1350	1.79	1405	1.96	1457	2.12	**1506**	**2.28**
2000	1323	1.79	1380	1.96	1434	2.13	**1486**	**2.31**	–	–

NOTE: For more information, see General Fan Performance Notes on page 64.
Boldface indicates field–supplied drive is required.
1. Recommend using field–supplied fan pulley (part no. KR11AZ506), motor pulley (part no. KR11HY181) and belt (part no. KR30AE041).

48TC**06 1 Phase 5 Ton Horizontal Supply

CFM	AVAILABLE EXTERNAL STATIC PRESSURE (in. wg)									
	0.2		0.4		0.6		0.8		1.0	
	RPM	BHP	RPM	BHP	RPM	BHP	RPM	BHP	RPM	BHP
	Standard Static Option								Medium Static Option	
1500	800	0.39	904	0.49	999	0.60	1087	0.72	1169	0.85
1625	849	0.48	947	0.59	1038	0.70	1122	0.83	1201	0.96
1750	899	0.59	992	0.70	1078	0.82	1159	0.95	1235	1.08
1875	950	0.70	1038	0.82	1120	0.95	1198	1.08	1271	1.22
2000	1001	0.84	1085	0.96	1163	1.09	1238	1.23	1309	1.38
2125	1053	0.99	1133	1.12	1208	1.26	1280	1.40	–	–
2250	1106	1.16	1182	1.29	1254	1.44	–	–	–	–
2375	1159	1.34	1231	1.49	–	–	–	–	–	–
2500	–	–	–	–	–	–	–	–	–	–

CFM	AVAILABLE EXTERNAL STATIC PRESSURE (in. wg)									
	1.2		1.4		1.6		1.8		2.0	
	RPM	BHP	RPM	BHP	RPM	BHP	RPM	BHP	RPM	BHP
	Medium Static Option									
1500	1247	0.98	1320	1.13	1390	1.28	1457	1.44	–	–
1625	1276	1.10	1348	1.24	1416	1.40	–	–	–	–
1750	1308	1.22	1377	1.38	–	–	–	–	–	–
1875	1342	1.37	–	–	–	–	–	–	–	–
2000	–	–	–	–	–	–	–	–	–	–
2125	–	–	–	–	–	–	–	–	–	–
2250	–	–	–	–	–	–	–	–	–	–
2375	–	–	–	–	–	–	–	–	–	–
2500	–	–	–	–	–	–	–	–	–	–

NOTE: For more information, see General Fan Performance Notes on page 64.
Boldface indicates field–supplied drive is required.

48TC**06 1 Phase 5 Ton Vertical Supply

CFM	AVAILABLE EXTERNAL STATIC PRESSURE (in. wg)									
	0.2		0.4		0.6		0.8		1.0	
	RPM	BHP	RPM	BHP	RPM	BHP	RPM	BHP	RPM	BHP
	Standard Static Option						Medium Static Option			
1500	848	0.42	968	0.55	1069	0.68	1158	0.80	1238	0.94
1625	897	0.51	1013	0.65	1111	0.79	1198	0.93	1277	1.07
1750	947	0.61	1059	0.76	1155	0.91	1240	1.06	1318	1.21
1875	997	0.72	1105	0.89	1199	1.05	1283	1.21	1359	1.37
2000	1048	0.85	1153	1.03	1244	1.20	1326	1.37	–	–
2125	1100	1.00	1201	1.19	1290	1.37	–	–	–	–
2250	1152	1.16	1250	1.36	–	–	–	–	–	–
2375	1205	1.34	–	–	–	–	–	–	–	–
2500	–	–	–	–	–	–	–	–	–	–

CFM	AVAILABLE EXTERNAL STATIC PRESSURE (in. wg)									
	1.2		1.4		1.6		1.8		2.0	
	RPM	BHP	RPM	BHP	RPM	BHP	RPM	BHP	RPM	BHP
	Medium Static Option						Field–Supplied Drive[1]			
1500	1312	1.07	1380	1.20	1445	1.34	**1506**	**1.48**	–	–
1625	1350	1.21	1418	1.35	**1482**	**1.50**	–	–	–	–
1750	1390	1.36	–	–	–	–	–	–	–	–
1875	–	–	–	–	–	–	–	–	–	–
2000	–	–	–	–	–	–	–	–	–	–
2125	–	–	–	–	–	–	–	–	–	–
2250	–	–	–	–	–	–	–	–	–	–
2375	–	–	–	–	–	–	–	–	–	–
2500	–	–	–	–	–	–	–	–	–	–

NOTE: For more information, see General Fan Performance Notes on page 64.
Boldface indicates field–supplied drive is required.

1. Recommend using field–supplied motor pulley (part number KR11HY171) and belt (part number KR30AE039).

48TC**06 3 Phase 5 Ton Horizontal Supply

CFM	AVAILABLE EXTERNAL STATIC PRESSURE (in. wg)									
	0.2		0.4		0.6		0.8		1.0	
	RPM	BHP	RPM	BHP	RPM	BHP	RPM	BHP	RPM	BHP
	Standard Static Option								Medium Static Option	
1500	800	0.39	904	0.49	999	0.60	1087	0.72	1169	0.85
1625	849	0.48	947	0.59	1038	0.70	1122	0.83	1201	0.96
1750	899	0.59	992	0.70	1078	0.82	1159	0.95	1235	1.08
1875	950	0.70	1038	0.82	1120	0.95	1198	1.08	1271	1.22
2000	1001	0.84	1085	0.96	1163	1.09	1238	1.23	1309	1.38
2125	1053	0.99	1133	1.12	1208	1.26	1280	1.40	1348	1.55
2250	1106	1.16	1182	1.29	1254	1.44	1323	1.59	1389	1.74
2375	1159	1.34	1231	1.49	1300	1.64	1367	1.80	1430	1.96
2500	1212	1.55	1281	1.70	1348	1.86	1412	2.02	1473	2.19

CFM	AVAILABLE EXTERNAL STATIC PRESSURE (in. wg)									
	1.2		1.4		1.6		1.8		2.0	
	RPM	BHP	RPM	BHP	RPM	BHP	RPM	BHP	RPM	BHP
	Medium Static Option								High Static Option	
1500	1247	0.98	1320	1.13	1390	1.28	1457	1.44	1522	1.61
1625	1276	1.10	1348	1.24	1416	1.40	1481	1.56	1544	1.73
1750	1308	1.22	1377	1.38	1444	1.53	1507	1.70	1569	1.87
1875	1342	1.37	1409	1.52	1473	1.69	1536	1.86	1596	2.03
2000	1377	1.53	1442	1.69	1505	1.86	1565	2.03	1624	2.21
2125	1414	1.71	1477	1.87	1538	2.04	1597	2.22	1654	2.40
2250	1452	1.91	1514	2.08	1573	2.25	1630	2.43	1686	2.62
2375	1492	2.12	1551	2.30	1609	2.48	1665	2.66	**1719**	**2.85**
2500	1533	2.36	1591	2.54	1647	2.73	–	–	–	–

NOTE: For more information, see General Fan Performance Notes on page 64.
Boldface indicates field–supplied drive is required.

1. Recommend using field–supplied fan pulley (part number KR11AZ506), motor pulley (part number KR11HY191) and belt (part number KR30AE042).

48TC**06 3 Phase 5 Ton Vertical Supply

CFM	AVAILABLE EXTERNAL STATIC PRESSURE (in. wg)									
	0.2		0.4		0.6		0.8		1.0	
	RPM	BHP	RPM	BHP	RPM	BHP	RPM	BHP	RPM	BHP
	Standard Static Option						Medium Static Option			
1500	848	0.42	968	0.55	1069	0.68	1158	0.80	1238	0.94
1625	897	0.51	1013	0.65	1111	0.79	1198	0.93	1277	1.07
1750	947	0.61	1059	0.76	1155	0.91	1240	1.06	1318	1.21
1875	997	0.72	1105	0.89	1199	1.05	1283	1.21	1359	1.37
2000	1048	0.85	1153	1.03	1244	1.20	1326	1.37	1401	1.54
2125	1100	1.00	1201	1.19	1290	1.37	1370	1.55	1444	1.73
2250	1152	1.16	1250	1.36	1336	1.55	1415	1.75	1487	1.94
2375	1205	1.34	1299	1.55	1384	1.76	1460	1.96	1532	2.17
2500	1258	1.54	1349	1.76	1431	1.98	1506	2.20	1576	2.41

CFM	AVAILABLE EXTERNAL STATIC PRESSURE (in. wg)									
	1.2		1.4		1.6		1.8		2.0	
	RPM	BHP	RPM	BHP	RPM	BHP	RPM	BHP	RPM	BHP
	Medium Static Option						High Static Option			
1500	1312	1.07	1380	1.20	1445	1.34	1506	1.48	1564	1.62
1625	1350	1.21	1418	1.35	1482	1.50	1542	1.64	1600	1.79
1750	1390	1.36	1457	1.51	1520	1.67	1580	1.83	1637	1.98
1875	1430	1.53	1496	1.69	1559	1.86	1618	2.02	1675	2.19
2000	1471	1.72	1536	1.89	1598	2.06	1657	2.24	**1713**	**2.41**
2125	1513	1.92	1577	2.10	1638	2.28	**1696**	**2.47**	**1752**	**2.65**
2250	1555	2.13	1619	2.33	1679	2.52	**1736**	**2.72**	–	–
2375	1598	2.37	1661	2.57	**1720**	**2.78**	–	–	–	–
2500	1642	2.63	**1704**	**2.84**	–	–	–	–	–	–

NOTE: For more information, see General Fan Performance Notes on page 64.
Boldface indicates field–supplied drive is required.

1. Recommend using field–supplied fan pulley (part number KR11AZ506), motor pulley (part number KR11HY191) and belt (part number KR30AE042).

48TC**07 3 Phase 6 Ton Horizontal Supply

CFM	AVAILABLE EXTERNAL STATIC PRESSURE (in. wg)									
	0.2		0.4		0.6		0.8		1.0	
	RPM	BHP	RPM	BHP	RPM	BHP	RPM	BHP	RPM	BHP
	Field–Supplied Drive[1]		Standard Static Option						Medium Static Option	
1800	**913**	**0.64**	1010	0.80	1098	0.98	1178	1.16	1252	1.35
1950	972	0.78	1065	0.96	1148	1.14	1226	1.34	1298	1.54
2100	1032	0.95	1120	1.14	1200	1.33	1275	1.54	1345	1.75
2250	1093	1.14	1177	1.34	1254	1.55	1325	1.76	1393	1.98
2400	1155	1.36	1234	1.57	1308	1.78	1377	2.01	1443	2.24
2550	1217	1.60	1293	1.82	1363	2.05	1430	2.28	1494	2.53
2700	1280	1.87	1352	2.10	1420	2.34	1484	2.59	1546	2.84
2850	1343	2.17	1412	2.42	1477	2.67	1539	2.93	1599	3.19
3000	1406	2.50	1472	2.76	1535	3.03	1595	3.29	1653	3.57

CFM	AVAILABLE EXTERNAL STATIC PRESSURE (in. wg)									
	1.2		1.4		1.6		1.8		2.0	
	RPM	BHP	RPM	BHP	RPM	BHP	RPM	BHP	RPM	BHP
	Medium Static Option								High Static Option	
1800	1322	1.56	1388	1.77	1451	1.98	1510	2.21	1568	2.44
1950	1366	1.75	1430	1.97	1491	2.20	1550	2.43	1606	2.67
2100	1411	1.97	1473	2.20	1533	2.43	1590	2.67	1645	2.92
2250	1457	2.21	1518	2.45	1576	2.69	1632	2.94	1686	3.20
2400	1505	2.48	1564	2.73	1621	2.98	1676	3.24	1729	3.51
2550	1554	2.78	1612	3.03	1667	3.30	1721	3.57	–	–
2700	1604	3.10	1660	3.37	1715	3.64	–	–	–	–
2850	1656	3.46	–	–	–	–	–	–	–	–
3000	–	–	–	–	–	–	–	–	–	–

NOTE: For more information, see General Fan Performance Notes on page 64.
Boldface indicates field–supplied drive is required.

1. Recommend using field–supplied fan pulley (part number KR11AZ406), motor pulley (part number KR11HY151) and belt (part number KR29AF035).

48TC**07 3 Phase 6 Ton Vertical Supply

CFM	AVAILABLE EXTERNAL STATIC PRESSURE (in. wg)									
	0.2		0.4		0.6		0.8		1.0	
	RPM	BHP	RPM	BHP	RPM	BHP	RPM	BHP	RPM	BHP
	Standard Static Option						Medium Static Option			
1800	967	0.63	1075	0.80	1170	0.97	1255	1.13	1333	1.28
1950	1029	0.77	1132	0.96	1223	1.14	1306	1.32	1382	1.49
2100	1091	0.93	1189	1.14	1278	1.33	1358	1.52	1433	1.71
2250	1154	1.11	1248	1.33	1333	1.55	1411	1.75	1484	1.96
2400	1218	1.32	1308	1.55	1390	1.78	1466	2.01	1537	2.23
2550	1283	1.55	1369	1.80	1448	2.05	1521	2.29	1590	2.52
2700	1348	1.80	1431	2.07	1507	2.33	1578	2.59	1645	2.84
2850	1414	2.09	1493	2.37	1566	2.65	1636	2.92	1701	3.19
3000	1479	2.40	1556	2.70	1627	3.00	1694	3.29	1757	3.57

CFM	AVAILABLE EXTERNAL STATIC PRESSURE (in. wg)									
	1.2		1.4		1.6		1.8		2.0	
	RPM	BHP	RPM	BHP	RPM	BHP	RPM	BHP	RPM	BHP
	Medium Static Option				High Static Option					
1800	1406	1.43	1475	1.58	1540	1.72	1601	1.87	1660	2.00
1950	1454	1.65	1521	1.82	1585	1.98	1645	2.13	1703	2.29
2100	1502	1.89	1568	2.07	1631	2.25	1690	2.42	1747	2.59
2250	1552	2.15	1617	2.35	1678	2.54	1737	2.73	**1793**	**2.92**
2400	1603	2.44	1666	2.65	1727	2.86	1784	3.06	**1839**	**3.26**
2550	1655	2.75	1717	2.98	1776	3.20	**1833**	**3.42**	**1887**	**3.64**
2700	1709	3.09	1769	3.33	**1827**	**3.57**	–	–	–	–
2850	1763	3.45	–	–	–	–	–	–	–	–
3000	–	–	–	–	–	–	–	–	–	–

NOTE: For more information, see General Fan Performance Notes on page 64.
Boldface indicates field–supplied drive is required.

1. Recommend using field–supplied fan pulley (part number KR11AZ506), motor pulley (part number KR11HY191) and belt (part number KR29AF042).

APPENDIX III. FAN PERFORMANCE (cont)

Pulley Adjustment

UNIT		MOTOR/DRIVE COMBO	MOTOR PULLEY TURNS OPEN										
			0.0	0.5	1.0	1.5	2.0	2.5	3.0	3.5	4.0	4.5	5.0
04	1 phase	Standard Static	854	825	795	766	736	707	678	648	619	589	560
		Medium Static	1175	1135	1094	1054	1013	973	932	892	851	811	770
		High Static	–	–	–	–	–	–	–	–	–	–	–
	3 phase	Standard Static	854	825	795	766	736	707	678	648	619	589	560
		Medium Static	1175	1135	1094	1054	1013	973	932	892	851	811	770
		High Static	1466	1423	1380	1337	1294	1251	1207	1164	1121	1078	1035
05	1 phase	Standard Static	854	825	795	766	736	707	678	648	619	589	560
		Medium Static	1175	1135	1094	1054	1013	973	932	892	851	811	770
		High Static	–	–	–	–	–	–	–	–	–	–	–
	3 phase	Standard Static	854	825	795	766	736	707	678	648	619	589	560
		Medium Static	1175	1135	1094	1054	1013	973	932	892	851	811	770
		High Static	1466	1423	1380	1337	1294	1251	1207	1164	1121	1078	1035
06	1 phase	Standard Static	1175	1135	1094	1054	1013	973	932	892	851	811	770
		Medium Static	1466	1423	1380	1337	1294	1251	1207	1164	1121	1078	1035
		High Static	–	–	–	–	–	–	–	–	–	–	–
	3 phase	Standard Static	1175	1135	1094	1054	1013	973	932	892	851	811	770
		Medium Static	1466	1423	1380	1337	1294	1251	1207	1164	1121	1078	1035
		High Static	1687	1649	1610	1572	1533	1495	1457	1418	1380	1341	1303
07	3 phase	Standard Static	1457	1419	1380	1342	1303	1265	1227	1188	1150	1111	1073
		Medium Static	1518	1484	1449	1415	1380	1346	1311	1277	1242	1208	1173
		High Static	1788	1757	1725	1694	1662	1631	1600	1568	1537	1505	1474

NOTE: Do not adjust pulley further than 5 turns open.

– Factory settings

48TC**04 3 TONS

V–Ph–Hz	VOLTAGE RANGE		COMP (ea)		OFM (ea)		IFM				
	MIN	MAX	RLA	LRA	WATTS	FLA	TYPE	Max WATTS	Max AMP Draw	EFF at Full Load	FLA
208–1–60	187	253	16.6	79	325	1.5	Std Static	1000	5.1	70%	4.9
							Med Static	1000	5.1	70%	4.9
230–1–60	187	253	16.6	79	325	1.5	Std Static	1000	5.1	70%	4.9
							Med Static	1000	5.1	70%	4.9
208–3–60	187	253	10.4	73	325	1.5	Std Static	1000	5.1	70%	4.9
							Med Static	1000	5.1	70%	4.9
							High Static	2120	5.5	80%	5.2
230–3–60	187	253	10.4	73	325	1.5	Std Static	1000	5.1	70%	4.9
							Med Static	1000	5.1	70%	4.9
							High Static	2120	5.5	80%	5.2
460–3–60	414	506	5.8	38	325	0.8	Std Static	1000	2.2	70%	2.1
							Med Static	2120	2.7	80%	2.6
							High Static	2120	2.7	80%	2.6
575–3–60	518	633	3.8	37	325	0.6	Std Static	1000	2.0	71%	1.9
							Med Static	2120	2.1	80%	2.0
							High Static	2120	2.1	80%	2.0

48TC**05 4 TONS

V–Ph–Hz	VOLTAGE RANGE		COMP (ea)		OFM (ea)		IFM				
	MIN	MAX	RLA	LRA	WATTS	FLA	TYPE	Max WATTS	Max AMP Draw	EFF at Full Load	FLA
208–1–60	187	253	21.8	117	325	1.5	Std Static	1000	5.1	70%	4.9
							Med Static	1850	7.4	78%	7.0
230–1–60	187	253	21.8	117	325	1.5	Std Static	1000	5.1	70%	4.9
							Med Static	1850	7.4	78%	7.0
208–3–60	187	253	13.7	83	325	1.5	Std Static	1000	5.1	70%	4.9
							Med Static	1000	5.1	70%	4.9
							High Static	2120	5.5	80%	5.2
230–3–60	187	253	13.7	83	325	1.5	Std Static	1000	5.1	70%	4.9
							Med Static	1000	5.1	70%	4.9
							High Static	2120	5.5	80%	5.2
460–3–60	414	506	6.2	41	325	0.8	Std Static	1000	2.2	70%	2.1
							Med Static	2120	2.7	80%	2.6
							High Static	2120	2.7	80%	2.6
575–3–60	518	633	4.8	37	325	0.6	Std Static	1000	2.0	71%	1.9
							Med Static	2120	2.1	80%	2.0
							High Static	2120	2.1	80%	2.0

48TC**06 5 TONS

V–Ph–Hz	VOLTAGE RANGE		COMP (ea)		OFM (ea)		IFM				
	MIN	MAX	RLA	LRA	WATTS	FLA	TYPE	Max WATTS	Max AMP Draw	EFF at Full Load	FLA
208–1–60	187	253	26.2	134	325	1.5	Std Static	1000	5.1	70%	4.9
							Med Static	1850	7.4	78%	7.0
230–1–60	187	253	26.2	134	325	1.5	Std Static	1000	5.1	70%	4.9
							Med Static	1850	7.4	78%	7.0
208–3–60	187	253	15.6	110	325	1.5	Std Static	1000	5.1	70%	4.9
							Med Static	2120	5.5	80%	5.2
							High Static	2615	7.9	81%	7.5
230–3–60	187	253	15.6	110	325	1.5	Std Static	1000	5.1	70%	4.9
							Med Static	2120	5.5	80%	5.2
							High Static	2615	7.9	81%	7.5
460–3–60	414	506	7.7	52	325	0.8	Std Static	2120	2.7	80%	2.6
							Med Static	2615	3.6	81%	3.4
							High Static	2615	3.6	81%	3.4
575–3–60	518	633	5.8	39	325	0.6	Std Static	2120	2.1	80%	2.0
							Med Static	3775	2.9	81%	2.8
							High Static	3775	2.9	81%	2.8

48TC**07 6 TONS

V–Ph–Hz	VOLTAGE RANGE		COMP (ea)		OFM (ea)		IFM				
	MIN	MAX	RLA	LRA	WATTS	FLA	TYPE	Max WATTS	Max AMP Draw	EFF at Full Load	FLA
208–3–60	187	253	19.0	12	325	1.5	Std Static	2120	5.5	80%	5.2
							Med Static	2615	7.9	81%	7.5
							High Static	3775	10.7	81%	10.2
230–3–60	187	253	19.0	12	325	1.5	Std Static	2120	5.5	80%	5.2
							Med Static	2615	7.9	81%	7.5
							High Static	3775	10.7	81%	10.2
460–3–60	414	506	9.7	62	325	0.8	Std Static	2120	2.7	80%	2.6
							Med Static	2615	3.6	81%	3.4
							High Static	3775	5.0	81%	4.8
575–3–60	518	633	7.4	50	325	0.6	Std Static	2120	2.1	80%	2.0
							Med Static	3775	2.9	81%	2.8
							High Static	3775	2.9	81%	2.8

MCA/MOCP DETERMINATION NO C.O. OR UNPWRD C.O.

UNIT	NOM. V–Ph–Hz	IFM TYPE	COMBUSTION FAN MOTOR FLA	POWER EXHAUST FLA	NO C.O. or UNPWRD C.O.							
					NO P.E.				w/ P.E. (pwrd fr/ unit)			
					MCA	MOCP	DISC. SIZE		MCA	MOCP	DISC. SIZE	
							FLA	LRA			FLA	LRA
48TC**04	208/230–1–60	STD	0.48	1.9	27.2	40.0	26	95	29.1	45.0	29	97
		MED			27.2	40.0	26	95	29.1	45.0	29	97
	208/230–3–60	STD	0.48	1.9	19.4	25.0	19	89	21.3	30.0	22	91
		MED			19.4	25.0	19	89	21.3	30.0	22	91
		HIGH			19.7	30.0	20	107	21.6	30.0	22	109
	460–3–60	STD	0.25	1.0	10.2	15.0	10	46	11.2	15.0	11	47
		MED			10.2	15.0	10	46	11.2	15.0	11	47
		HIGH			10.7	15.0	11	55	11.7	15.0	12	56
	575–3–60	STD	0.24	1.9	7.3	15.0	7	44	9.2	15.0	9	46
		MED			7.3	15.0	7	44	9.2	15.0	9	46
		HIGH			7.4	15.0	7	50	9.3	15.0	10	52
48TC**05	208/230–1–60	STD	0.48	1.9	33.7	50.0	32	133	35.6	50.0	35	135
		MED			33.7	50.0	32	133	35.6	50.0	35	135
	208/230–3–60	STD	0.48	1.9	23.5	30.0	23	99	25.4	30.0	25	101
		MED			23.5	30.0	23	99	25.4	30.0	25	101
		HIGH			23.8	30.0	23	117	25.7	30.0	25	119
	460–3–60	STD	0.25	1.0	10.7	15.0	10	49	11.7	15.0	12	50
		MED			10.7	15.0	10	49	11.7	15.0	12	50
		HIGH			11.2	15.0	11	58	12.2	15.0	12	59
	575–3–60	STD	0.24	1.9	8.5	15.0	8	44	10.4	15.0	11	46
		MED			8.5	15.0	8	44	10.4	15.0	11	46
		HIGH			8.6	15.0	9	50	10.5	15.0	11	52

[1]Fuse or breaker

LEGEND:

CO – Convenient outlet
DISC – Disconnect
FLA – Full load amps
IFM – Indoor fan motor
LRA – Locked rotor amps
MCA – Minimum circuit amps
MOCP – Maximum over current protection
PE – Power exhaust
UNPWRD CO – Unpowered convenient outlet

NOTES:

1. In compliance with NEC requirements for multimotor and combination load equipment (refer to NEC Articles 430 and 440), the overcurrent protective device for the unit shall be fuse or HACR breaker. Canadian units may be fuse or circuit breaker.
2. **Unbalanced 3-Phase Supply Voltage**
   Never operate a motor where a phase imbalance in supply voltage is greater than 2%. Use the following formula to determine the percentage of voltage imbalance.

$$\%\ \text{Voltage Imbalance} = 100 \times \frac{\text{max voltage deviation from average voltage}}{\text{average voltage}}$$

Example: Supply voltage is 230-3-60

AB = 224 v
BC = 231 v
AC = 226 v

$$\text{Average Voltage} = \frac{(224 + 231 + 226)}{3} = \frac{681}{3}$$

$$= 227$$

Determine maximum deviation from average voltage.
(AB) 227 – 224 = 3 v
(BC) 231 – 227 = 4 v
(AC) 227 – 226 = 1 v
Maximum deviation is 4 v.
Determine percent of voltage imbalance.

$$\%\ \text{Voltage Imbalance} = 100 \times \frac{4}{227}$$

$$= 1.76\%$$

This amount of phase imbalance is satisfactory as it is below the maximum allowable 2%.

IMPORTANT: If the supply voltage phase imbalance is more than 2%, contact your local electric utility company immediately.

MCA/MOCP DETERMINATION NO C.O. OR UNPWRD C.O. (cont)

UNIT	NOM. V–Ph–Hz	IFM TYPE	COMBUSTION FAN MOTOR FLA	POWER EXHAUST FLA	NO C.O. or UNPWRD C.O.							
					NO P.E.				w/ P.E. (pwrd fr/ unit)			
					MCA	MOCP	DISC. SIZE		MCA	MOCP	DISC. SIZE	
							FLA	LRA			FLA	LRA
48TC**06	208/230–1–60	STD	0.48	1.9	39.2	60.0	37	150	41.1	60.0	40	152
		MED			41.3	60.0	40	175	43.2	60.0	42	177
	208/230–3–60	STD	0.48	1.9	25.9	30.0	25	126	27.8	40.0	27	128
		MED			26.2	40.0	26	144	28.1	40.0	28	146
		HIGH			28.5	40.0	29	170	30.4	45.0	30	172
	460–3–60	STD	0.25	1.0	12.5	20.0	12	60	13.5	20.0	13	61
		MED			13.0	20.0	13	69	14.0	20.0	14	70
		HIGH			13.8	20.0	14	82	14.8	20.0	15	83
	575–3–60	STD	0.24	1.9	9.8	15.0	10	46	11.7	15.0	12	48
		MED			9.9	15.0	10	52	11.8	15.0	13	54
		HIGH			10.7	15.0	11	63	12.6	15.0	13	65
48TC**07	208/230–3–60	STD	0.48	1.9	30.5	45.0	30	157	32.4	50.0	32	159
		MED			32.8	50.0	32	183	34.7	50.0	34	185
		HIGH			32.8	50.0	32	183	34.7	50.0	34	185
	460–3–60	STD	0.25	1.0	15.5	25.0	15	79	16.5	25.0	16	80
		MED			16.3	25.0	16	92	17.3	25.0	17	93
		HIGH			17.3	25.0	17	101	18.3	25.0	18	102
	575–3–60	STD	0.24	1.9	11.9	15.0	12	63	13.8	20.0	14	65
		MED			12.7	20.0	12	74	14.6	20.0	15	76
		HIGH			12.7	20.0	12	74	14.6	20.0	15	76

[1]Fuse or breaker

LEGEND:

CO – Convenient outlet
DISC – Disconnect
FLA – Full load amps
IFM – Indoor fan motor
LRA – Locked rotor amps
MCA – Minimum circuit amps
MOCP – Maximum over current protection
PE – Power exhaust
UNPWRD CO – Unpowered convenient outlet

NOTES:

1. In compliance with NEC requirements for multimotor and combination load equipment (refer to NEC Articles 430 and 440), the overcurrent protective device for the unit shall be fuse or HACR breaker. Canadian units may be fuse or circuit breaker.
2. **Unbalanced 3-Phase Supply Voltage**
   Never operate a motor where a phase imbalance in supply voltage is greater than 2%. Use the following formula to determine the percentage of voltage imbalance.

$$\% \text{ Voltage Imbalance} = 100 \times \frac{\text{max voltage deviation from average voltage}}{\text{average voltage}}$$

Example: Supply voltage is 230-3-60

AB = 224 v
BC = 231 v
AC = 226 v

$$\text{Average Voltage} = \frac{(224 + 231 + 226)}{3} = \frac{681}{3}$$

$$= 227$$

Determine maximum deviation from average voltage.
(AB) 227 – 224 = 3 v
(BC) 231 – 227 = 4 v
(AC) 227 – 226 = 1 v
Maximum deviation is 4 v.
Determine percent of voltage imbalance.

$$\% \text{ Voltage Imbalance} = 100 \times \frac{4}{227}$$

$$= 1.76\%$$

This amount of phase imbalance is satisfactory as it is below the maximum allowable 2%.

IMPORTANT: If the supply voltage phase imbalance is more than 2%, contact your local electric utility company immediately.

APPENDIX V. WIRING DIAGRAM LIST

Wiring Diagrams

48TC_A			
SIZE	**VOLTAGE**	**CONTROL**	**POWER**
A04	208/230–1–60	48TM500213.04	48TM500749.07
	208/230–3–60	48TM500213.04	48TM500748.06
	460–3–60	48TM500213.04	48TM500748.06
	575–3–60	48TM500213.04	48TM500215.06
A05	208/230–1–60	48TM500213.04	48TM500749.07
	208/230–3–60	48TM500213.04	48TM500748.06
	460–3–60	48TM500213.04	48TM500748.06
	575–3–60	48TM500213.04	48TM500215.06
A06	208/230–1–60	48TM500213.04	48TM500749.07
	208/230–3–60	48TM500213.04	48TM500748.06
	460–3–60	48TM500213.04	48TM500748.06
	575–3–60	48TM500213.04	48TM500215.06
A07	208/230–3–60	48TM500213.04	48TM500748.06
	460–3–60	48TM500213.04	48TM500748.06
	575–3–60	48TM500213.04	48TM500215.06
All	PremierLink#	48TM500984.02#	

NOTE: Component arrangement on Control; Legend on Power Schematic

The PremierLink label is an overlay for the Control label for the specific base model. Both labels (Control and PremierLink) are required to display a complete unit control schematic with PremierLink Option

APPENDIX VI. MOTORMASTER SENSOR LOCATIONS

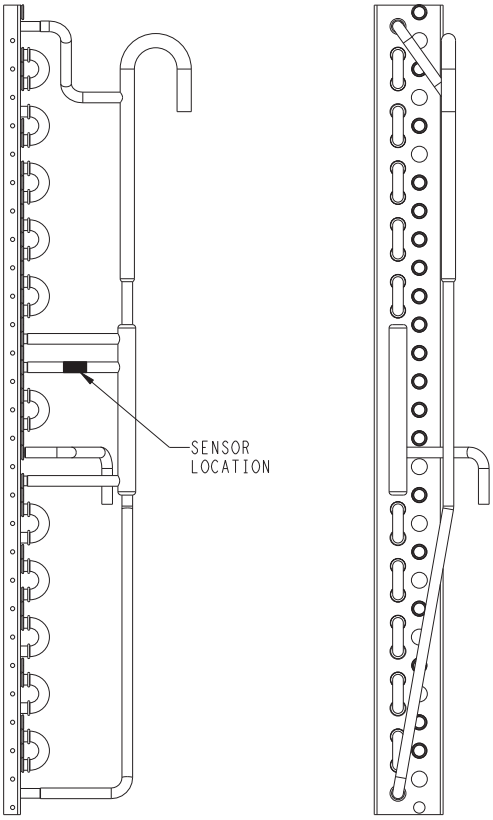

C08259

Fig. 72 - 48TC*A04 Outdoor Circuiting

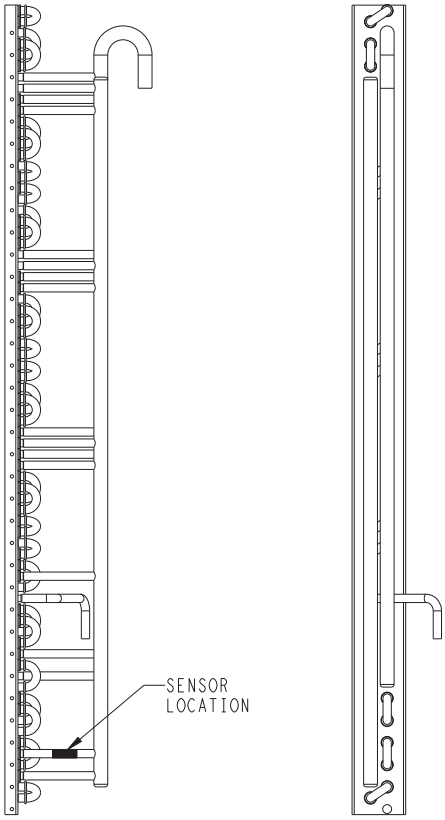

C08261

Fig. 74 - 48TC*A07 Outdoor Circuiting

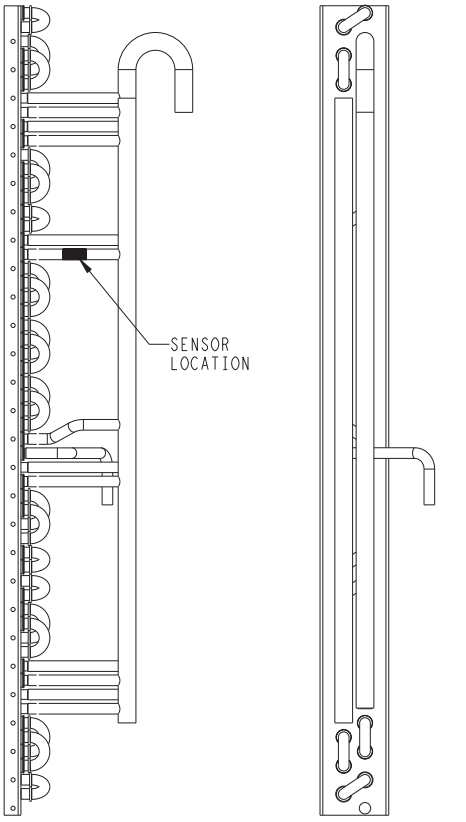

C08260

Fig. 73 - 48TC*A05/06 Outdoor Circuiting

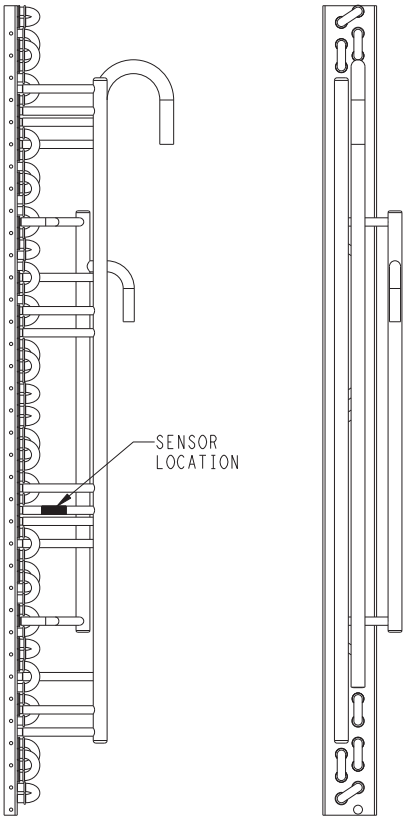

C08262

Fig. 75 - 48TC*A08 Outdoor Circuiting

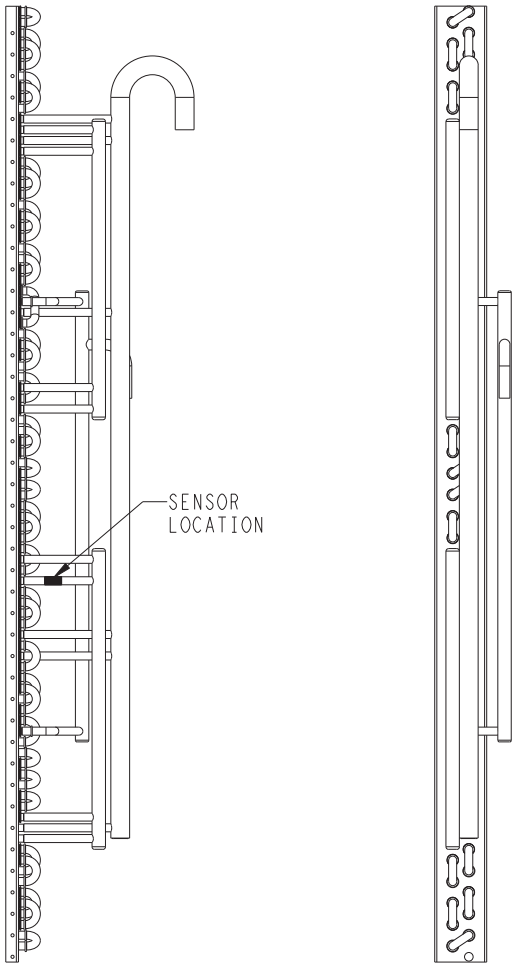

C08263

Fig. 76 - 48TC*A09/12 Outdoor Circuiting

Copyright 2008 Carrier Corp. • 7310 W. Morris St. • Indianapolis, IN 46231 Printed in U.S.A. Edition Date: 04/08 **Catalog No: 48TC−1SM**

Manufacturer reserves the right to change, at any time, specifications and designs without notice and without obligations. Replaces: NEW

UNIT START-UP CHECKLIST

I. PRELIMINARY INFORMATION:

MODEL NO.:_____ SERIAL NO: _____

DATE:_____ TECHNICIAN: _____

BUILDING LOCATION:_____

II. PRE-START-UP (insert check mark in box as each item is completed):

☐ VERIFY THAT ALL PACKAGING MATERIALS HAVE BEEN REMOVED FROM UNIT
☐ VERIFY THAT CONDENSATE CONNECTION IS INSTALLED PER INSTALLATION INSTRUCTIONS
☐ VERIFY THAT FLUE HOOD IS INSTALLED
☐ CHECK ALL ELECTRICAL CONNECTIONS AND TERMINALS FOR TIGHTNESS
☐ CHECK TO ENSURE NO WIRES ARE TOUCHING REFRIGERANT TUBING OR SHARP EDGES
☐ CHECK GAS PIPING FOR LEAKS
☐ CHECK THAT RETURN-AIR FILTER IS CLEAN AND IN PLACE
☐ VERIFY THAT UNIT INSTALLATION IS LEVEL
☐ CHECK FAN WHEEL AND PROPELLER FOR LOCATION IN HOUSING/ORIFICE AND VERIFY SETSCREW IS TIGHT
☐ VERIFY PULLEY ALIGNMENT AND BELT TENSION ARE CORRECT

III. START-UP

ELECTRICAL

SUPPLY VOLTAGE	L1-L2	_____	L2-L3	_____	L3-L1	_____
COMPRESSOR AMPS	L1	_____	L2	_____	L2	_____
INDOOR FAN AMPS	L1	_____	L2	_____	L2	_____

TEMPERATURES

OUTDOOR-AIR TEMPERATURE	_____	DB	_____	WB
RETURN-AIR TEMPERATURE	_____	DB	_____	WB
COOLING SUPPLY AIR	_____	DB	_____	WB
GAS HEAT SUPPLY AIR	_____	DB		

PRESSURES

GAS INLET PRESSURE	_____	IN. WG		
GAS MANIFOLD PRESSURE	_____	IN. WG (LOW FIRE)	_____	IN. WG (HI FIRE)
REFRIGERANT SUCTION	_____	PSIG	_____	TEMP °F
REFRIGERANT DISCHARGE	_____	PSIG	_____	TEMP °F

☐ VERIFY REFRIGERANT CHARGE USING CHARGING CHARTS
☐ VERIFY THAT 3-PHASE SCROLL COMPRESSOR IS ROTATING IN CORRECT DIRECTION

Copyright 2008 Carrier Corp. • 7310 W. Morris St. • Indianapolis, IN 46231 Printed in U.S.A. Edition Date: 04/08

Catalog No: 48TC–1SM

Manufacturer reserves the right to change, at any time, specifications and designs without notice and without obligations.

Replaces: NEW