58MTA
Deluxe 4–Way Multipoise 2-Stage Direct Vent Condensing Gas Furnace

Visit www.carrier.com

Installation, Start-up, and Operating Instructions Sizes 060-120

NOTE: Read the entire instruction manual before starting the installation.

This symbol → indicates a change since the last issue.

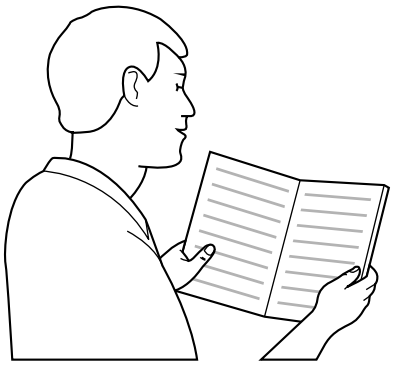

A93040

TABLE OF CONTENTS

SAFETY CONSIDERATIONS 2
INTRODUCTION 2
CODES AND STANDARDS 3
- Safety 3
- General Installation 3
- Combustion and Ventilation Air 3
- Duct Systems 3
- Acoustical Lining and Fibrous Glass Duct 3
- Gas Piping and Gas Pipe Pressure Testing 3
- Electrical Connections 5

ELECTROSTATIC DISCHARGE (ESD) PRECAUTIONS 5
APPLICATIONS 6
- General 6
- Upflow Applications 6
  - Condensate Trap Location (Factory-Shipped Orientation) 6
  - Condensate Trap Tubing (Factory-Shipped Orientation) 6
  - Condensate Trap Location (Alternate Upflow Orientation) 7
  - Condensate Trap Tubing (Alternate Upflow Orientation) 7
  - Condensate Trap Field Drain Attachment 8
  - Pressure Switch Tubing 8
  - Upper Collector Box and Inducer Housing (Unused) Drain Connections 8
  - Condensate Trap Freeze Protection 8
- Downflow Applications 8
  - Condensate Trap Location 8
  - Condensate Trap Tubing 8
  - Condensate Trap Field Drain Attachment 9
  - Pressure Switch Tubing 9
  - Condensate Trap Freeze Protection 9
- Horizontal Left (Supply-Air Discharge) Applications 9
  - Condensate Trap Location 9
  - Condensate Trap Tubing 10
  - Condensate Trap Field Drain Attachments 10
  - Pressure Switch Tubing 10
  - Condensate Trap Freeze Protection 11
  - Construct a Working Platform 11
- Horizontal Right (Supply-Air Discharge) Applications 11
  - Condensate Trap Location 11
  - Condensate Trap Tubing 11
  - Condensate Trap Field Drain Attachment 12
  - Pressure Switch Tubing 12
  - Condensate Trap Freeze Protection 12
  - Construct a Working Platform 12

LOCATION 13
- General 13
- Furnace Location Relative to Cooling Equipment 13
- Hazardous Locations 14

INSTALLATION 14
- Leveling Legs (If Desired) 14
- Installation in Upflow and Downflow Applications 14
- Installation in Horizontal Applications 16
- Air Ducts 16
  - General Requirements 16
  - Ductwork Acoustical Treatment 16
  - Supply Air Connections 16
  - Return Air Connections 16
- Filter Arrangement 17
- Bottom Closure Panel 18
- Gas Piping 18
- Electrical Connections 19
  - 115-V Wiring 19
  - 24-V Wiring 21
  - Accessories 21
- Direct Venting 23
  - Removal of Existing Furnaces from Common Vent Systems 23
  - Combustion-Air and Vent Piping 24
  - Concentric Vent and Combustion-Air Termination Kit Installation 28
  - Multiventing and Vent Terminations 32
- Condensate Drain 32
  - General 33
  - Application 33
  - Condensation Drain Protection 34

START-UP ADJUSTMENT AND SAFETY CHECK 34
- General 34
- Sequence of Operation 35
  - Two-Stage Heating With Single-Stage Thermostat (Adaptive Mode) 35

Manufacturer reserves the right to discontinue, or change at any time, specifications or designs without notice and without incurring obligations.

Two-Stage Heating With Two-Stage Thermostat (Non-Adaptive Heating Mode) 36
Cooling Mode 36
Thermidistat Mode 39
Continuous Blower Mode 39
Heat Pump 40
Start-Up Procedures 40
Purge Gas Lines 40
Component Self-Test 40
Prime Condensate Trap With Water 40
Operate Furnace 41
Furnace Restart 41
Adjustments 41
Set Gas Input Rate 41
Set Temperature Rise 45
Adjust Blower Off Delay (Heat Mode) 46
Set Thermostat Heat Anticipator 46
Check Safety Controls 47
Checklist 47

REGISTERED QUALITY SYSTEM

SAFETY CONSIDERATIONS

⚠ CAUTION

Application of this furnace should be indoors with special attention given to vent sizing and material, gas input rate, air temperature rise, unit leveling, and unit sizing. Improper installation or misapplication of furnace can require excessive servicing or cause premature component failure.

⚠ WARNING

Improper installation, adjustment, alteration, service, maintenance, or use can cause carbon monoxide poisoning, explosion, fire, electrical shock, or other conditions which may cause personal injury or property damage. Consult a qualified installer, service agency, local gas supplier, or your distributor or branch for information or assistance. The qualified installer or agency must use only factory-authorized and listed kits or accessories when modifying this product. Failure to follow this warning could result in electrical shock, fire, personal injury, or death.

Installing and servicing heating equipment can be hazardous due to gas and electrical components. **Only trained and qualified personnel should install, repair, or service heating equipment.** Untrained personnel can perform basic maintenance functions such as cleaning and replacing air filters. All other operations must be performed by trained service personnel. When working on heating equipment, observe precautions in literature, on tags, and on labels attached to or shipped with unit and other safety precautions that may apply.

These instructions cover the minimum requirements and conform to existing national standards and safety codes. In some instances, these instructions exceed certain local codes and ordinances, especially those that may not have kept up with changing residential construction practices. We require these instructions as a minimum for a safe installation.

Wear safety glasses and work gloves.

⚠ CAUTION

→ Sheet metal parts may have sharp edges or burrs. Use care and wear appropriate protective clothing and gloves when handling parts. Failure to follow this caution could result in personal injury.

Have a fire extinguisher available during start-up and adjustment procedures and service calls.

Recognize safety information. This is the safety-alert symbol ⚠. When you see this symbol on the unit and in instructions or manuals, be alert to the potential for personal injury.

Understand these signal words: DANGER, WARNING, CAUTION, and NOTE. These words are used with the safety-alert symbol. DANGER identifies the most serious hazards which **will** result in severe personal injury or death. WARNING signifies hazards which **could** result in personal injury or death. CAUTION is used to identify unsafe practices which **would** result in minor personal injury or product and property damage. NOTE is used to highlight suggestions which **will** result in enhanced installation, reliability, or operation.

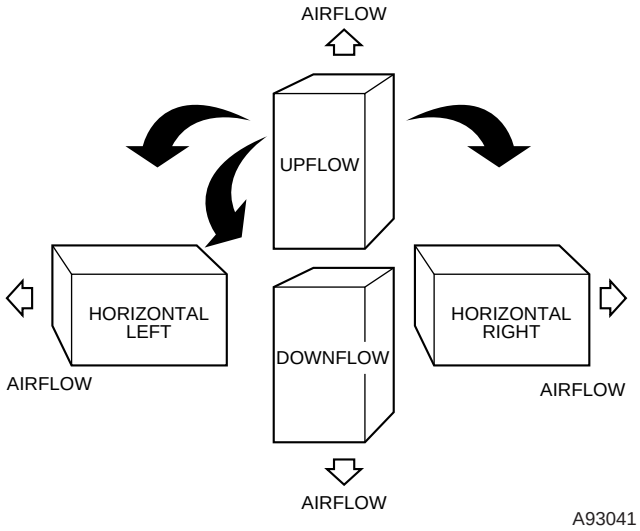

Fig. 1—Multipoise Orientations

INTRODUCTION

The model 58MTA, 2-Stage, 4-way multipoise, Gas-Fired, Category IV, direct vent condensing furnace is available in model sizes ranging in high-stage gas input rates of 60,000 to 120,000 Btuh. This furnace is C.S.A. design-certified for natural and propane gases (see furnace rating plate) and for installation in alcoves, attics, basements, closets, utility rooms, crawlspaces, and garages. This furnace is factory-shipped for use with natural gas. A C.S.A. listed gas conversion kit is required to convert furnace for use with propane gas.

This furnace **shall not** be installed directly on carpeting, tile, or any other combustible material other than wood flooring. For

downflow installations, a factory accessory floor base **must** be used when installed on combustible materials and wood flooring. Special base is not required when this furnace is installed on the manufacturer's coil assembly or when the manufacturer's coil box is used. The design of the 58MTA furnace is **not** C.S.A. (A.G.A. and C.G.A.) certified for installation in mobile homes, recreational vehicles, or outdoors. This furnace is suitable for installation in a structure built on site or a manufactured building completed at final site.

1. Combustion products must be discharged outdoors. Connect this furnace to an approved vent system only, as specified in the "Venting" section of these instructions
2. Never test for gas leaks with an open flame. Use a commercially available soap solution made specifically for the detection of leaks to check all connections, as specified in the ″Gas Piping″ and ″Start-Up, Adjustment, and Safety Check″ section.
3. Always install furnace to operate within the furnace's intended temperature-rise range with a duct system which has an external static pressure within the allowable range, as specified in the "Adjustments" section. See furnace rating plate.
4. When a furnace is installed so that supply ducts carry air circulated by the furnace to areas outside the space containing the furnace, the return air shall also be handled by duct(s) sealed to the furnace casing and terminating outside the space containing the furnace.
5. A gas-fired furnace for installation in a residential garage must be installed as specified in the warning box in the "Location" section.
6. The furnace is not to be used for temporary heating of buildings or structures under construction.

This furnace is designed for continuous return-air minimum temperature of 60 °F db or intermittent operation down to 55°F db. Return-air temperature must not exceed 85°F db. See Fig. 4.

This furnace is shipped with the drain and pressure tubes connected for **UPFLOW** applications. Minor modifications are required when used in **DOWNFLOW, HORIZONTAL RIGHT,** or **HORIZONTAL LEFT** (supply-air discharge direction) applications as shown in Fig. 1. See details in Applications section.

This furnace must be installed with a direct-vent (combustion air and flue) system and a factory accessory termination kit. In a direct-vent system, all air for combustion is taken directly from the outdoor atmosphere and all flue gases are discharged to the outdoor atmosphere. See furnace and factory accessory vent-air intake termination kit instructions for proper installation.

This furnace is shipped with the following materials to assist in proper furnace installation. These materials are shipped in the main blower compartment.

Installer Packet includes:	
Installation, Startup, and Operating Instructions	
Service and Maintenance Instructions	
User's Information Manual	
Warranty Certificate	
Loose Parts Bag includes:	Quantity
Pressure tube extension	1
Collector Box or condensate trap extension tube	1
Inducer housing drain tube	1
1/2-in CPVC street elbow	2
Drain tube coupling	1
Drain tube coupling grommet	1
Vent and combustion-air intake pipe support	2
Condensate trap hole filler plug	3
Vent and combustion-air intake hole filler plug	2
Combustion-air intake pipe perforated disk assembly	1
Vent Pipe Extension	1*

* ONLY supplied with some furnaces.

For accessory installation detail, refer to the accessory installation instruction.

NOTE: Remove all shipping materials before operating furnace.

CODES AND STANDARDS

Follow all national and local codes and standards in addition to these instructions. The installation must comply with regulations of the serving gas supplier, local building, heating, plumbing, and other codes. In absence of local codes, the installation must comply with the national codes listed below and all authorities having jurisdiction.

In the United States and Canada, follow all codes and standards for the following:

Step 1—Safety

- US: National Fuel Gas Code (NFGC) NFPA 54-1999/ANSI Z223.1-1999 and the Installation Standards, Warm Air Heating and Air Conditioning Systems ANSI/NFPA 90B
- CANADA: CSA B149.1-00 National Standard of Canada, Natural Gas and Propane Installation Code (NSCNGPIC)

Step 2—General Installation

- US: current edition of the NFGC and the NFPA 90B. For copies, contact the National Fire Protection Association Inc., Batterymarch Park, Quincy, MA 02269; or for only the NFGC contact the American Gas Association, 400 N. Capitol., N.W., Washington DC 20001
- CANADA: NSCNGPIC. For a copy, contact Standard Sales, CSA International, 178 Rexdale Boulevard, Etobicoke (Toronto), Ontario, M9W 1R3, Canada.

Step 3—Combustion and Ventilation Air

- US: Section 5.3 of the NFGC, Air for Combustion and Ventilation
- CANADA: Part 7 of the NSCNGPIC, Venting Systems and Air Supply for Appliances

Step 4—Duct Systems

- US and CANADA: Air Conditioning Contractors Association (ACCA) Manual D, Sheet Metal and Air Conditioning Contractors National Association (SMACNA), or American Society of Heating, Refrigeration, and Air Conditioning Engineers (ASHRAE) 2001 Fundamentals Handbook Chapter 34.

Step 5—Acoustical Lining and Fibrous Glass Duct

- US and CANADA: current edition of SMACNA, NFPA 90B as tested by UL Standard 181 for Class I Rigid Air Ducts

Step 6—Gas Piping and Gas Pipe Pressure Testing

- US: NFGC; chapters 2, 3, 4, and 9 and national plumbing codes
- CANADA: NSCNGPIC Parts 3, 4, 5, A, B, E, G, and H.

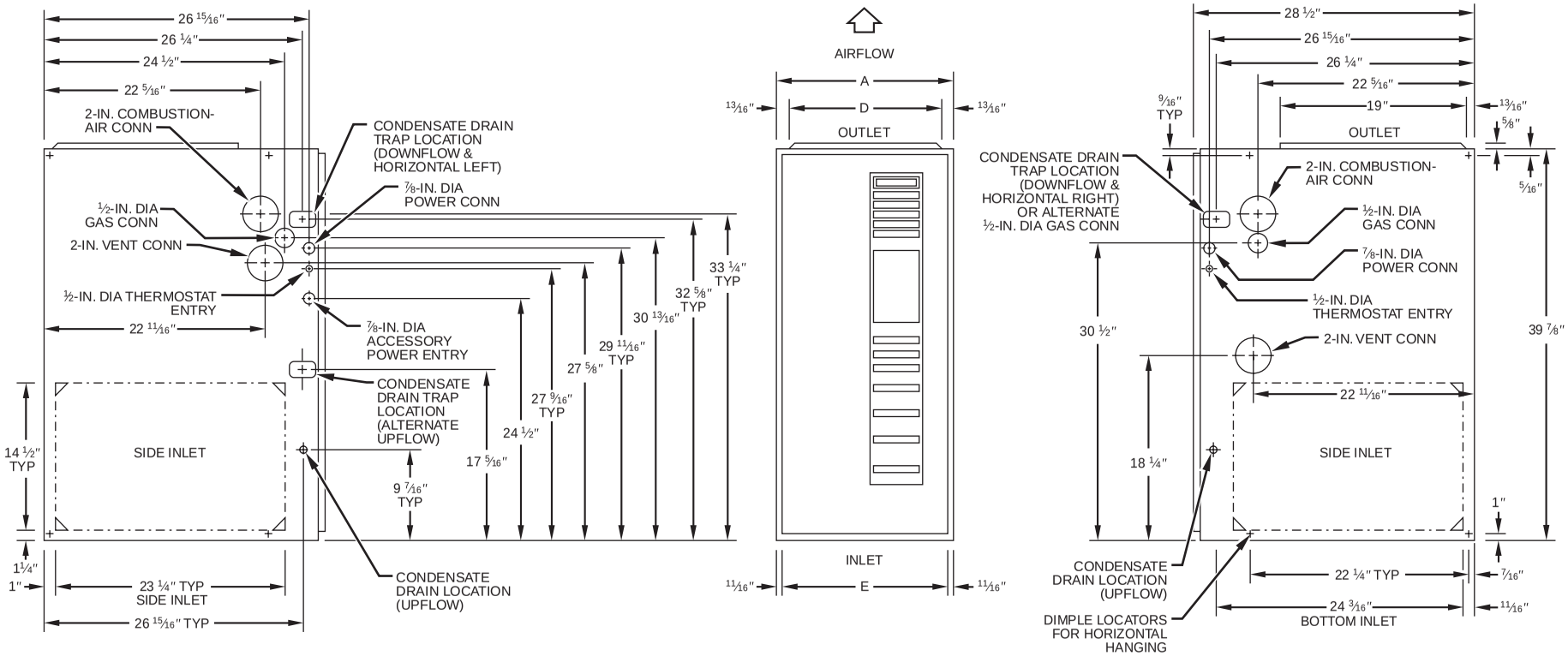

NOTES: 1. Minimum return-air openings at furnace, based on metal duct. If flex duct is used, see flex duct manufacturer's recommendations for equivalent diameters.

2. Minimum return-air opening at furnace:
   a. For 800 CFM–16-in. round or 14½ x 12-in. rectangle.
   b. For 1200 CFM–20-in. round or 14½ x 19½-in. rectangle.
   c. For 1600 CFM–22-in. round or 14½ x 23¼-in. rectangle.
   d. For airflow requirements above 1800 CFM, see Air Delivery table in Product Data literature for specific use of single side inlets. The use of both side inlets, a combination of 1 side and the bottom, or the bottom only will ensure adequate return air openings for airflow requirements above 1800 CFM at 0.5" W.C. ESP.

DIMENSIONS (IN.)

UNIT SIZE	A	D	E
060-12	17-1/2	15-7/8	16
080-12	17-1/2	15-7/8	16
080-16	17-1/2	15-7/8	16
100-16	21	19-3/8	19-1/2
100-20	21	19-3/8	19-1/2
120-20	24-1/2	22-7/8	23

A02149

Fig. 2—Dimensional Drawing

INSTALLATION

This forced air furnace is equipped for use with natural gas at altitudes 0 - 10,000 ft (0 - 3,050m), except 140 size Furnaces are only approved for altitudes 0 - 7,000 ft. (0 - 2,135m).

An accessory kit, supplied by the manufacturer, shall be used to convert to propane gas use or may be required for some natural gas applications.

This furnace is for indoor installation in a building constructed on site. This furnace may be installed in a manufactured (mobile) home when stated on rating plate and using factory authorized kit.

This furnace may be installed on combustible flooring in alcove or closet at minimum clearance from combustible material.

This appliance requires a special venting system. Refer to the installation instructions for parts list and method of installation. This furnace is for use with schedule-40 PVC, PVC-DWV, CPVC, or ABS-DWV pipe, and must not be vented in common with other gas-fired appliances. Construction through which vent/air intake pipes may be installed is maximum 24 inches (600 mm), minimum 3/4 inches (19 mm) thickness (including roofing materials).

Cette fournaise à air pulsé est équipée pour utilisation avec gaz naturel et altitudes comprises entre 0 - 3,050m (0-10,000 pi), excepté queles fournaises de 140 taille sont pour altitudes comprises entre 0 - 2,135m (0 - 7,000 pi).

Utiliser une trousse de conversion, fournie par le fabricant, pour passer au gaz propane ou pour certaines installations au gaz naturel.

Cette fournaise à air pulsé est pour installation à l´intérieur dans un bâtiment construit sur place. Cette fournaise à air pulsé peut être installée dans une maison préfabriquée (maison mobile) si prescrit par la plaque signalétique et si l´on utilise une trousse specifiée par le fabricant.

Cette fournaise peut être installée sur un plancher combustible dans un enfoncement ou un placard en observant les dégagements minimums avec les matériaux combustibles.

Cet appareil nécessite un système d´évacuation spécial. La méthode d´installation et la liste des pièces nécessaires figurent dans les instructions d´installation.Cette fournaise doit s´utiliser avec la tuyauterie des nomenclatures 40 PVC, PVC-DWV, CPVC, ou ABS-DWV et elle ne peut pas être ventilée conjointm ent avec d´autres appareils à gaz. Épaisseur de la construction au travers de laquelle il est possible de faire passer les tuyaux d´aération (admission/évacuation): 24 po (600 mm) maximum, 3/4 po (19 mm) minimum (y compris la toiture).

For upflow and downflow applications, furnace must be installed level, or pitched within 1/2" of level. For a horizontal application, the furnace must be pitched minimum 1/4" to maximum of 1/2" forward for proper drainage. See Installation Manual for IMPORTANT unit support details on horizontal applications.

Pour des applications de flux ascendant et descendant, la fournaise doit être installée de niveau ou inclinée à pas plus de 1/2" du niveau. Pour une application horizontale, la fournaise doit être inclinée entre minimum 1/4" et maximum 1/2" du niveau pour le drainage approprié. En cas d'installation en position horizontale, consulter les renseignements IMPORTANTS sur le support dans le manuel d'installation.

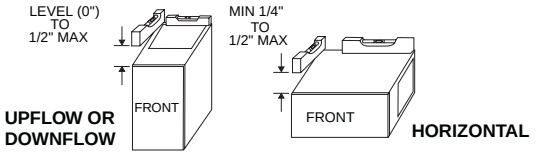

MINIMUM INCHES CLEARANCE TO COMBUSTIBLE CONSTRUCTION

ALL POSITIONS:

* Minimum front clearance for service 30 inches (762mm).

†† 140 size furnaces require 1 inch back clearance to combustible materials.

DOWNFLOW POSITIONS:

† For installation on combustible floors only when installed on special base No. KGASB0201ALL, Coil Assembly, Part No. CD5 or CK5, or Coil Casing, Part No. KCAKC.

HORIZONTAL POSITIONS:

Line contact is permissible only between lines formed by intersections of top and two sides of furnace jacket, and building joists, studs, or framing.

§ Clearance shown is for air inlet and air outlet ends.

Ø 120 and 140 size furnaces require 1 inch bottom clearance to combustible materials.

DÉGAGEMENT MINIMUM EN POUCES AVEC ÉLÉMENTS DE CONSTRUCTION COMBUSTIBLES

POUR TOUS LES POSITIONS:

* Dégagement avant minimum de 762mm (30 po) pour l´entretien.

†† Pour les fournaises de 140 taille, 1 po (25mm) dégagement des matériaux combustibles est requis au-arriere.

POUR LA POSITION COURANT DESCENDANT:

† Pour l´installation sur le plancher combustible seulement quand on utilise la base spéciale, pièce n° KGASB0201ALL, l´ensemble serpentin, pièce n° CD5 ou CK5, ou le carter de serpentin, pièce n° KCAKC.

POUR LA POSITION HORIZONTALE:

Le contact n´est permis qúentre les lignes formées par les intersections du dessus et des deuxcôtés de la chemise de la fournaise, et des solives, des montants ou de la charpente du bâtiment.

§ La distance indiquée concerne l´extrémité du tuyau d´arrivée d´air et l´extrémité du tuyau de sortie d´air.

Ø Pour les fournaises de 120 et 140 taille, 1 po (25mm) dégagement des matériaux combustibles est requis au-dessous.

324999-201 REV. D (LIT TOP)

This furnace is approved for UPFLOW, DOWNFLOW and HORIZONTAL installations.

Cette fournaise est approuvée pour l´installation HORIZONTALE et la circulation d´air VERS LE HAUT et VERS LE BAS.

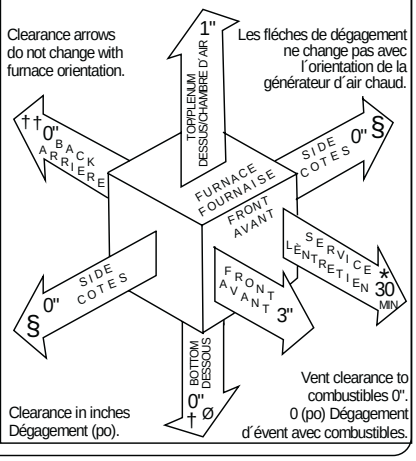

A02148

→ **Fig. 3—Clearances to Combustibles**

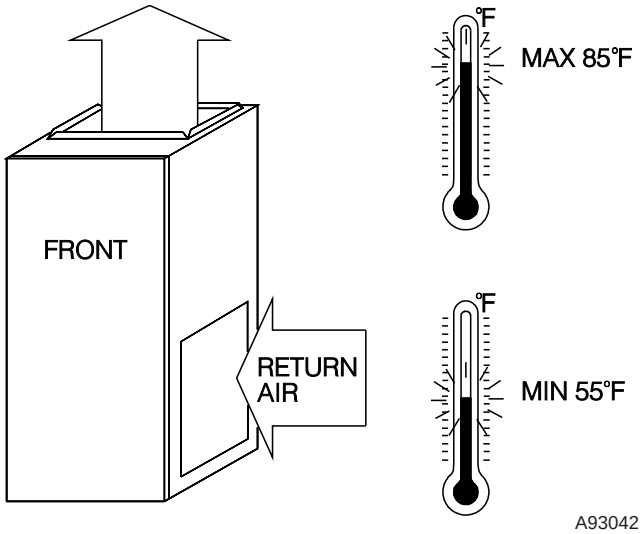

A93042

Fig. 4—Return-Air Temperature

Step 7—Electrical Connections

- US: National Electrical Code (NEC) ANSI/NFPA 70-2002
- CANADA: Canadian Electrical Code CSA C22.1

ELECTROSTATIC DISCHARGE (ESD) PRECAUTIONS PROCEDURE

Use this procedure for all installed and uninstalled furnaces. An ESD service kit (available from commercial sources) may be used to prevent ESD damage.

⚠ CAUTION

Electrostatic discharge can affect electronic components. Follow the Electronic Discharge Precautions Procedure listed below during furnace intstallation and servicing to protect the furnace electronic control. Precautions will prevent electrostatic discharges from personnel and hand tools which are held during the procedure. These precautions will help to avoid exposing the control to electrostatic discharge by putting the furnace, the control, and the person at the same electrostatic potential.

1. Disconnect all power to the furnace. Multiple disconnects may be required. DO NOT TOUCH THE CONTROL OR **ANY** WIRE CONNECTED TO THE CONTROL PRIOR TO DISCHARGING YOUR BODY'S ELECTROSTATIC CHARGE TO GROUND.
2. Firmly touch the clean, unpainted, metal surface of the furnace chassis which is close to the control. Tools held in hand during grounding will be discharged.

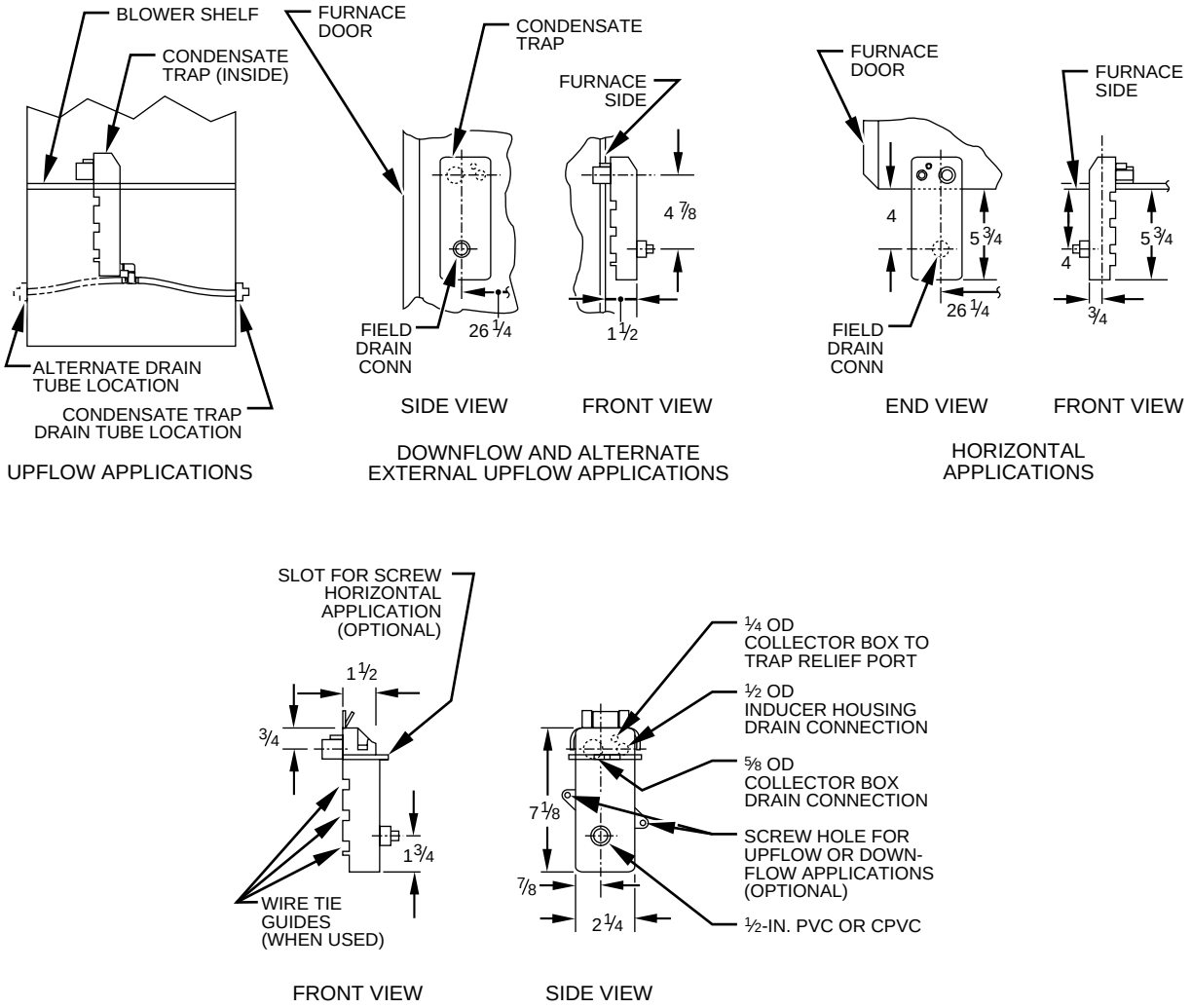

Fig. 5—Condensate Trap

3. You may proceed to service the control or connecting wires as long as you do nothing to recharge your body (moving or shuffling feet, touching ungrounded objects, etc.).
4. If you touch ungrounded objects, firmly touch a clean, unpainted metal surface again before touching control or wires.
5. Before removing a new control from its container, discharge your body's charge to ground. If the control is to be installed in a furnace, follow items 1 through 4 before bringing the control or yourself in contact with the furnace. Put all used and new controls into containers before touching ungrounded objects.

APPLICATIONS

Step 1—General

Some assembly and modifications are required for furnaces installed in any of the 4 applications shown in Fig. 1. All drain and pressure tubes are connected as shown in Fig. 6. See appropriate application instructions for these procedures.

Step 2—Upflow Applications

In an upflow application, the blower is located below the burner section, and conditioned air is discharged upwards.

CONDENSATE TRAP LOCATION (FACTORY-SHIPPED ORIENTATION)

The condensate trap is factory installed in the blower shelf and factory connected for UPFLOW applications. A factory-supplied tube is used to extend the condensate trap drain connection to the desired furnace side for field drain attachment. See Condensate Trap Tubing (Factory-Shipped Orientation) section for drain tube extension details. (See Fig. 5.)

CONDENSATE TRAP TUBING (FACTORY-SHIPPED ORIENTATION)

NOTE: See Fig. 6 or tube routing label on main furnace door to confirm location of these tubes.

1. Collector Box Drain, Inducer Housing Drain, Relief Port, and Pressure Switch Tubes
   These tubes should be factory attached to condensate trap and pressure switch ready for use in **upflow** applications. These tubes can be identified by their connection location and also by a color label on each tube. These tubes are identified as follows: collector box drain tube (blue label), inducer housing drain tube (violet label or molded), relief port tube (green label), and pressure switch tube (pink label).
2. Condensate Trap Drain Tube
   The condensate trap drain connection must be extended for field attachment by doing the following:
   a. Determine location of field drain connection. (See Fig. 2 or 6.)

NOTE: If internal filter or side Filter/Media Cabinet is used, drain tube should be located to opposite side of casing of return duct attachment to assist in filter removal.

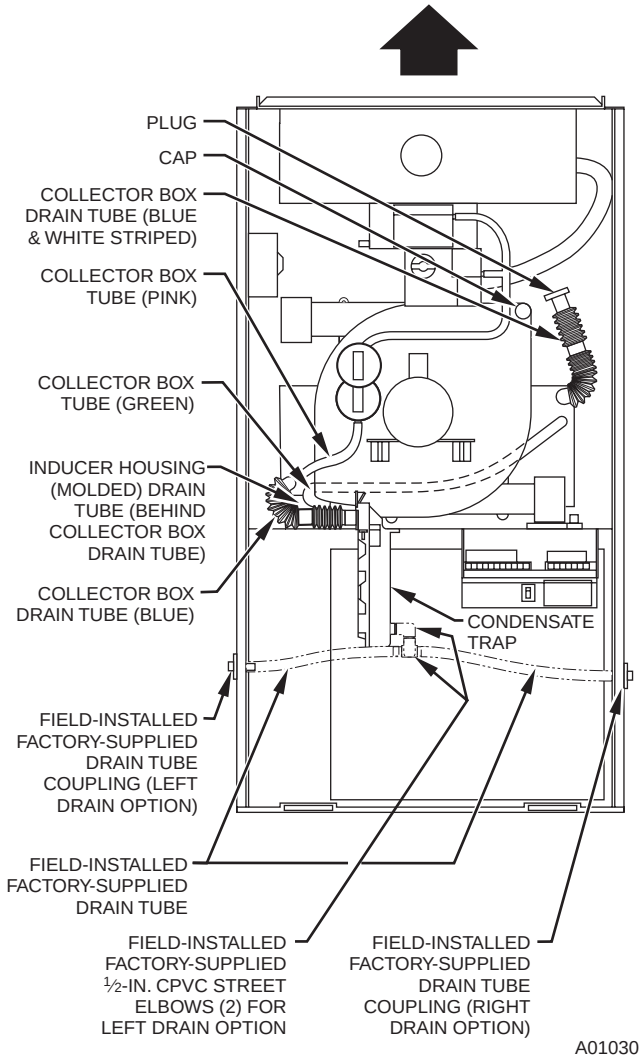

Fig. 6—Factory-Shipped Upflow Tube Configuration (Shown with Blower Access Panel Removed)

b. Remove and discard casing drain hole plug button from desired side.

c. Install drain tube coupling grommet (factory-supplied in loose parts bag) in selected casing hole.

d. Slide drain tube coupling (factory-supplied in loose parts bag) through grommet ensuring long end of coupling faces blower.

e. Cement 2 factory-supplied 1/2-in. street CPVC elbows to the rigid drain tube connection on the condensate trap. (See Fig. 6.) These elbows must be cemented together and cemented to condensate trap drain connection.

NOTE: Failure to use CPVC elbows may allow drain to kink and prevent draining.

f. Connect larger diameter drain tube and clamp (factory-supplied in loose parts bag) to condensate trap and clamp securely.

g. Route tube to coupling and cut to appropriate length.

h. Attach tube to coupling and clamp securely.

CONDENSATE TRAP LOCATION (ALTERNATE UPFLOW ORIENTATION)

An alternate location for the condensate trap is the left-hand side of casing. (See Fig. 2 and 7.)

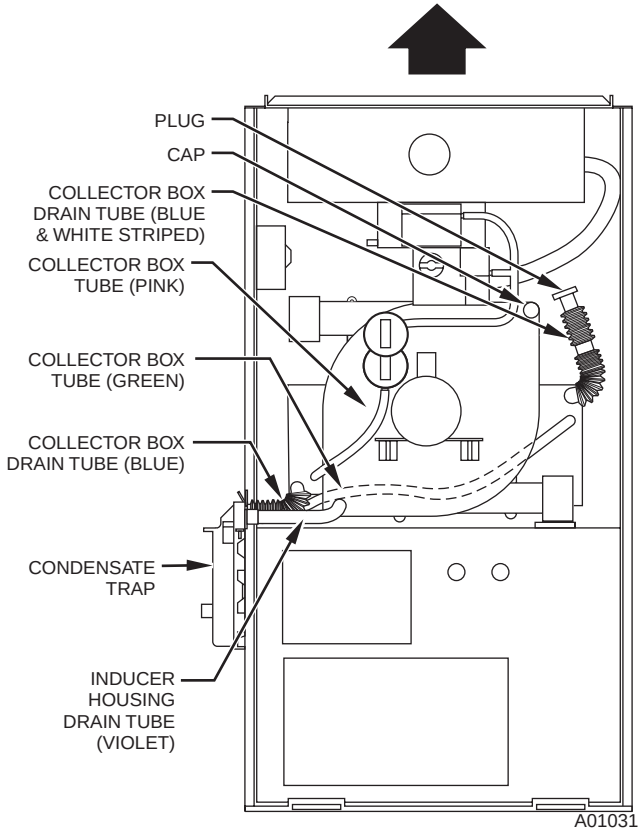

Fig. 7—Alternate Upflow Configuration and Trap Location

NOTE: If the alternate left-hand side of casing location is used, the factory-connected drain and relief port tubes must be disconnected and modified for attachment. See Condensate Trap Tubing (Alternate Upflow Orientation) section for tubing attachment. To relocate condensate trap to the left-hand side, perform the following:

1. Remove 3 tubes connected to condensate trap.
2. Remove trap from blower shelf by gently pushing tabs inward and rotating trap.
3. Install casing hole filler cap (factory-supplied in loose parts bag) into blower shelf hole where trap was removed.
4. Install condensate trap into left-hand side casing hole by inserting tube connection stubs through casing hole and rotating until tabs snap into locking position.
5. Fill unused condensate trap casing holes with plastic filler caps (factory-supplied in loose parts bag).

CONDENSATE TRAP TUBING (ALTERNATE UPFLOW ORIENTATION)

NOTE: See Fig. 7 or tube routing label on main furnace door to confirm location of these tubes.

1. Collector Box Drain Tube
   Connect collector box drain tube (blue label) to condensate trap.

NOTE: On 17-1/2 in. wide furnaces ONLY, cut tube between corrugated sections to prevent kinks from occurring.

2. Inducer Housing Drain Tube

   a. Remove and discard LOWER (molded) inducer housing drain tube which was previously connected to condensate trap.

b. Use inducer housing drain extension tube (violet label and factory-supplied in loose parts bag) to connect LOWER inducer housing drain connection to the condensate trap.

c. Determine appropriate length, cut, and connect tube.

d. Clamp tube to prevent any condensate leakage.

3. Relief Port Tube

a. Connect relief port tube (green label) to condensate trap.

b. Extend this tube (if required) by splicing to small diameter tube (factory-supplied in loose parts bag).

c. Determine appropriate length, cut, and connect tube.

CONDENSATE TRAP FIELD DRAIN ATTACHMENT

Refer to Condensate Drain section for recommendations and procedures.

PRESSURE SWITCH TUBING

The LOWER collector box pressure tube (pink label) is factory connected to the High Pressure Switch and should not require any modification.

NOTE: See Fig. 6 or 7 or tube routing label on main furnace door to check for proper connections.

UPPER COLLECTOR BOX AND INDUCER HOUSING (UNUSED) DRAIN CONNECTIONS

1. Upper collector box drain connection
Attached to the UPPER collector box drain connection is a factory-installed corrugated, plugged tube (blue and white striped label). This tube is plugged to prevent condensate leakage in this application. Ensure this tube is plugged.

NOTE: See Fig. 6 or 7 or tube routing label on main furnace door to check for proper connections.

2. Upper inducer housing drain connection
Attached to the UPPER (unused) inducer housing drain connection is a cap and clamp. This cap is used to prevent condensate leakage in this application. Ensure this connection is capped.

NOTE: See Fig. 6 or 7 or tube routing label on main furnace door to check for proper connections.

CONDENSATE TRAP FREEZE PROTECTION

Refer to Condensate Drain Protection section for recommendations and procedures.

Step 3—Downflow Applications

In a downflow furnace application, the blower is located above the burner section, and conditioned air is discharged downwards.

CONDENSATE TRAP LOCATION

The condensate trap must be removed from the factory-installed blower shelf location and relocated in selected application location as shown in Fig. 2, 8, or 9.

To relocate condensate trap from the blower shelf to desired location, perform the following:

1. Remove 3 tubes connected to condensate trap.
2. Remove trap from blower shelf by gently pushing tabs inward and rotating trap.
3. Remove casing hole filler cap from casing hole. (See Fig. 2, 8, or 9.)
4. Install casing hole filler cap into blower shelf hole where trap was removed.
5. Install condensate trap into desired casing hole by inserting tube connection stubs through casing hole and rotating until tabs snap into locking position.

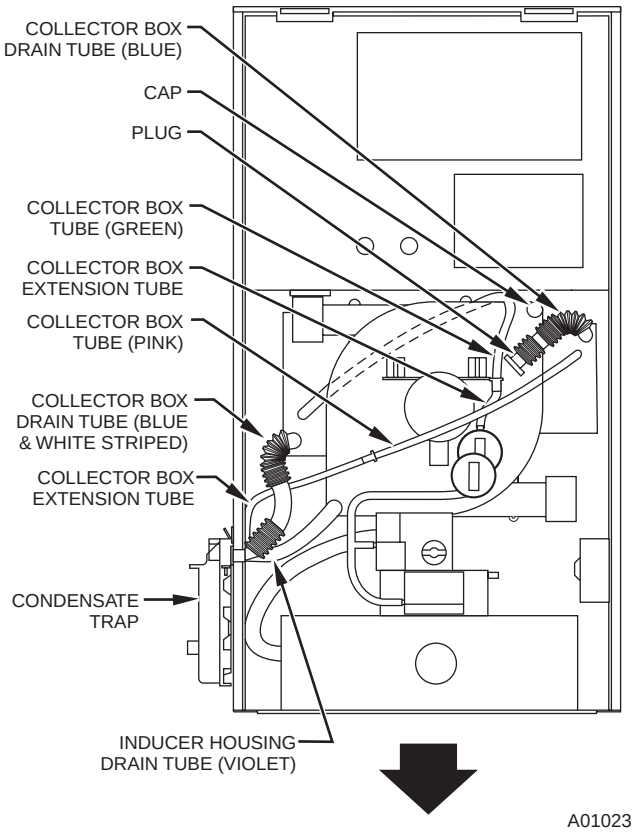

Fig. 8—Downflow Tube Configuration (Left-Hand Trap Installation)

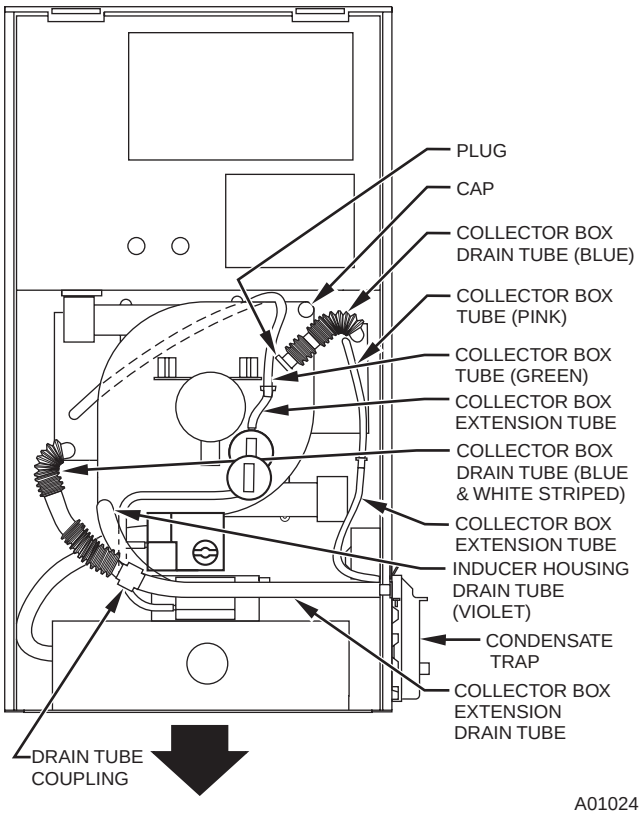

Fig. 9—Downflow Tube Configuration (Right-Hand Trap Installation)

CONDENSATE TRAP TUBING

NOTE: See Fig. 8 or 9 or tube routing label on main furnace door to check for proper connections.

Relocate tubes as described below.

1. Collector Box Drain Tube
   a. Remove factory-installed plug from LOWER collector box drain tube (blue and white striped label).
   b. Install removed clamp and plug into UPPER collector box drain tube (blue label) which was connected to condensate trap.
   c. Connect LOWER collector box drain connection to condensate trap.
      (1.) Condensate Trap Located on Left Side of Casing
         (a.) Connect LOWER collector box drain tube (blue and white striped label) to condensate trap. Tube does not need to be cut.
         (b.) Clamp tube to prevent any condensate leakage.
      (2.) Condensate Trap Located on Right Side of Casing
         (a.) Install drain tube coupling (factory-supplied in loose parts bag) into collector box drain tube (blue and white striped label) which was previously plugged.
         (b.) Connect larger diameter drain tube (factory-supplied in loose parts bag) to drain tube coupling, extending collector box drain tube for connection to condensate trap.
         (c.) Route extended collector box drain tube directly from collector box drain to condensate trap as shown in Fig. 9.
         (d.) Determine appropriate length and cut.
         (e.) Connect to condensate trap.
         (f.) Clamp tube to prevent any condensate leakage.
2. Inducer Housing Drain Tube
   a. Remove factory-installed cap and clamp from LOWER inducer housing drain connection.
   b. Remove and discard UPPER (molded) inducer housing drain tube which was previously connected to condensate trap.
   c. Install cap and clamp on UPPER inducer housing drain connection where molded drain tube was removed.
   d. Use inducer housing drain tube (violet label and factory-supplied in loose parts bag) to connect LOWER inducer housing drain connection to the condensate trap.
   e. Connect inducer housing drain connection to condensate trap.
      (1.) Condensate Trap Located on Left Side of Casing
         (a.) Determine appropriate length and cut.
         (b.) Connect tube to condensate trap.
         (c.) Clamp tube to prevent any condensate leakage.
      (2.) Condensate Trap Located on Right Side of Casing
         (a.) Route inducer housing drain tube (violet label) directly from inducer housing to condensate trap as shown in Fig. 9.
         (b.) Determine appropriate length and cut.
         (c.) Connect tube to condensate trap.
         (d.) Clamp tube to prevent any condensate leakage.
3. Relief Port Tube
   Refer to Pressure Switch Tubing section for connection procedure.

CONDENSATE TRAP FIELD DRAIN ATTACHMENT

Refer to Condensate Drain section for recommendations and procedures.

PRESSURE SWITCH TUBING

One collector box pressure tube (pink label) is factory connected to the High Pressure Switch for use when furnace is installed in **upflow** applications. This tube MUST be disconnected and used for the condensate trap relief port tube. The other collector box pressure tube (green label) which was factory connected to the condensate trap relief port connection MUST be connected to the High Pressure Switch in DOWNFLOW or HORIZONTAL RIGHT applications

NOTE: See Fig. 8 or 9 or tube routing label on main furnace door to check for proper connections.

1. Disconnect collector box pressure tube (pink label) attached to High Pressure Switch.
2. Extend collector box pressure tube (green label) which was previously connected to condensate trap relief port connection by splicing to small diameter tube (factory-supplied in loose parts bag).
3. Connect collector box pressure tube (green label) to High Pressure Switch connection labeled COLLECTOR BOX.
4. Extend collector box pressure tube (pink label) which was previously connected to High Pressure Switch by splicing to remaining small diameter tube (factory-supplied in loose parts bag).
5. Route this extended tube (pink label) to condensate trap relief port connection.
6. Determine appropriate length, cut, and connect tube.
7. Clamp tube to relief port connection.

CONDENSATE TRAP FREEZE PROTECTION

Refer to Condensate Drain Protection section for recommendations and procedures.

Step 4—Horizontal Left (Supply-Air Discharge) Applications

In a horizontal left furnace application, the blower is located to the right of the burner section, and conditioned air is discharged to the left.

⚠ CAUTION

Local codes may require a drain pan under entire furnace and condensate trap when a condensing furnace is used in an attic application or over a finished ceiling.

NOTE: In Canada, installations shall be in accordance with current NSCNGPIC and/or local codes.

CONDENSATE TRAP LOCATION

The condensate trap must be removed from the factory-installed blower shelf location and relocated in selected application location as shown in Fig. 2 or 10.

To relocate condensate trap from the blower shelf to desired location, perform the following:

1. Remove 3 tubes connected to condensate trap.
2. Remove trap from blower shelf by gently pushing tabs inward and rotating trap.
3. Install casing hole filler cap (factory-supplied in loose parts bag) into blower shelf hole where trap was removed.
4. Install condensate trap into left-hand side casing hole by inserting tube connection stubs through casing hole and rotating until tabs snap into locking position.

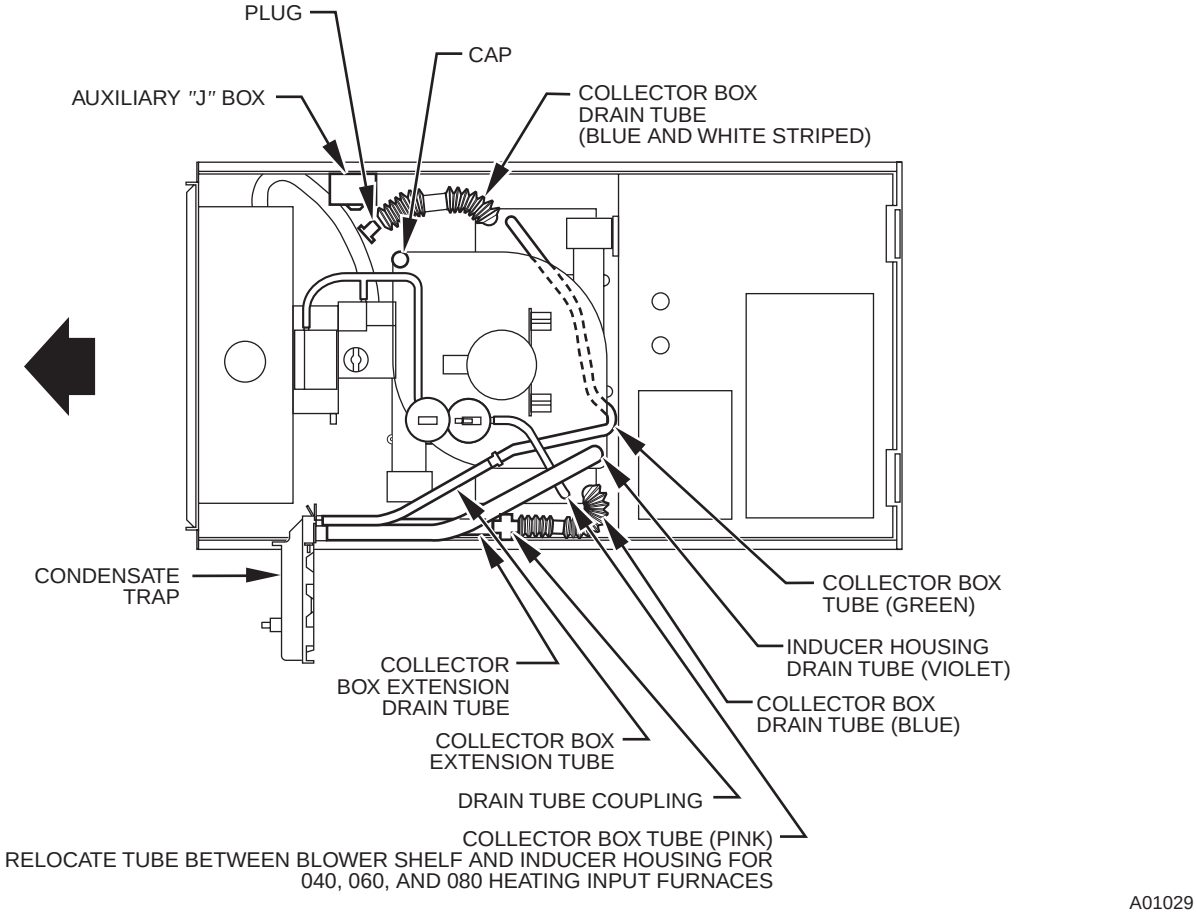

Fig. 10—Horizontal Left Tube Configuration

5. Fill unused condensate trap casing holes with plastic filler caps (factory-supplied in loose parts bag).

CONDENSATE TRAP TUBING

NOTE: See Fig. 10 or tube routing label on main furnace door to check for proper connections.

1. Collector Box Drain Tube
   a. Install drain tube coupling (factory-supplied in loose parts bag) into collector box drain tube (blue label) which was previously connected to condensate trap.
   b. Connect large diameter drain tube and clamp (factory-supplied in loose parts bag) to drain tube coupling, extending collector box drain tube.
   c. Route extended tube (blue label) to condensate trap and cut to appropriate length.
   d. Clamp tube to prevent any condensate leakage.
2. Inducer Housing Drain Tube
   a. Remove and discard LOWER (molded) inducer housing drain tube which was previously connected to condensate trap.
   b. Use inducer housing drain extension tube (violet label and factory-supplied in loose parts bag) to connect LOWER inducer housing drain connection to the condensate trap.
   c. Determine appropriate length, cut, and connect tube.
   d. Clamp tube to prevent any condensate leakage.
3. Relief Port Tube
   a. Extend collector box tube (green label) which was previously connected to the condensate trap by splicing to small diameter tube (factory-supplied in loose parts bag).
   b. Route extended collector box pressure tube to relief port connection on the condensate trap.
   c. Determine appropriate length, cut, and connect tube.
   d. Clamp tube to prevent any condensate leakage.

CONDENSATE TRAP FIELD DRAIN ATTACHMENTS

Refer to Condensate Drain section for recommendations and procedures.

PRESSURE SWITCH TUBING

The LOWER collector box pressure tube (pink label) is factory connected to the High Pressure Switch for use when furnace is installed in UPFLOW applications. This tube MUST be disconnected, extended, rerouted, and then reconnected to the pressure switch in HORIZONTAL LEFT applications for 060 and 080 heating input furnaces.

NOTE: See Fig. 10 or tube routing label on main furnace door to check for proper connections.

Modify tube as described below:

1. Disconnect collector box pressure tube (pink label) attached to High Pressure Switch.
2. Use smaller diameter tube (factory-supplied in loose parts bag) to extend tube disconnected in item 1.
3. Route extended tube:
   a. Behind inducer housing.
   b. Between blower shelf and inducer housing.
4. Determine appropriate length, cut, and reconnect tube to High Pressure Switch connection labeled COLLECTOR BOX.

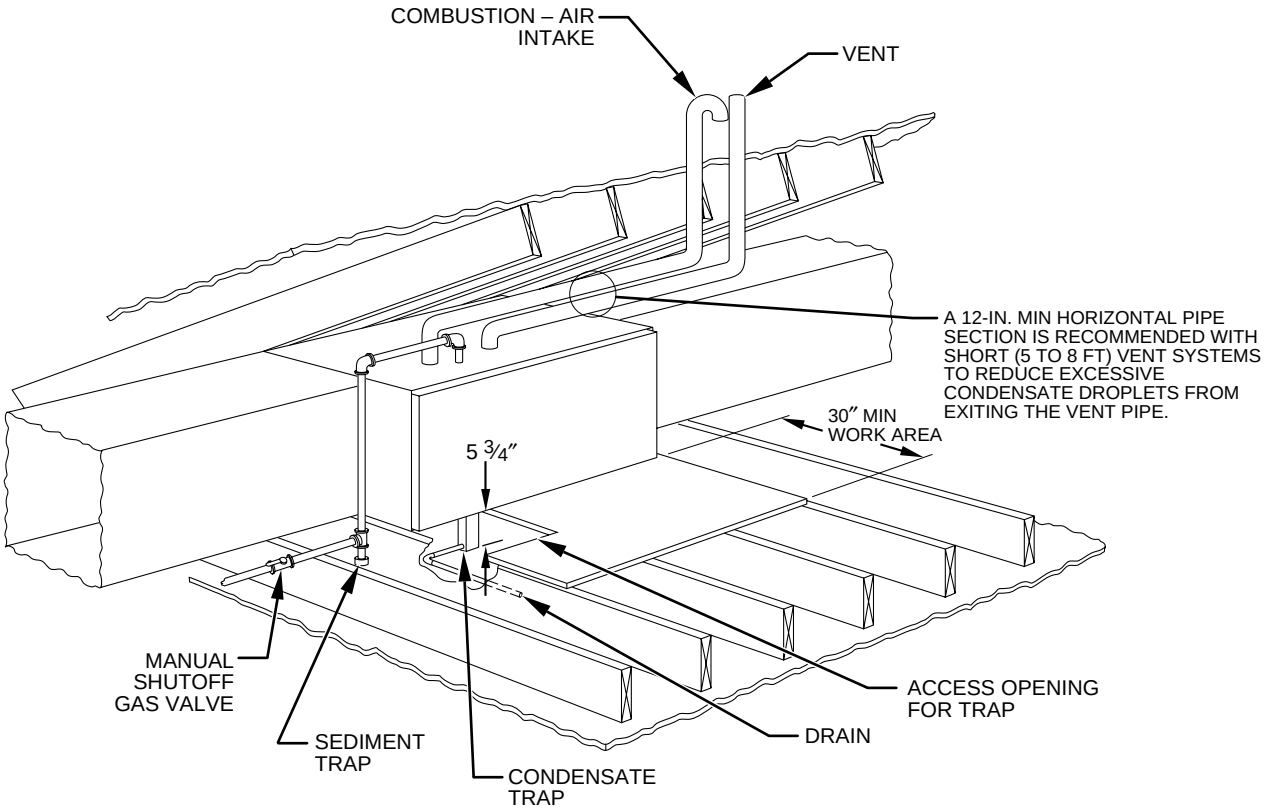

NOTE: LOCAL CODES MAY REQUIRE A DRAIN PAN UNDER THE FURNACE AND CONDENSATE TRAP WHEN A CONDENSING FURNACE IS INSTALLED ABOVE FINISHED CEILINGS.

A93031

Fig. 11—Attic Location and Working Platform

CONDENSATE TRAP FREEZE PROTECTION

Refer to Condensate Drain Protection section for recommendations and procedures.

CONSTRUCT A WORKING PLATFORM

Construct working platform where all required furnace clearances are met. (See Fig. 3 and 11.)

⚠ CAUTION

The condensate trap MUST be installed below furnace. See Fig. 5 for dimensions. The drain connection to condensate trap must also be properly sloped to an open drain.

NOTE: Combustion-air and vent pipes are restricted to a minimum length of 5 ft. (See Table 7.)

NOTE: A 12-in. minimum offset pipe section is recommended with short (5 to 8 ft) vent systems. This recommendation is to reduce excessive condensate droplets from exiting the vent pipe. (See Fig. 11 or 35.)

Step 5—Horizontal Right (Supply-Air Discharge) Applications

In a horizontal right furnace application, the blower is located to the left of the burner section, and conditioned air is discharged to the right.

⚠ CAUTION

Local codes may require a drain pan under entire furnace and condensate trap when a condensing furnace is used in attic application or over a finished ceiling.

NOTE: In Canada, installations shall be in accordance with current NSCNGPIC Installation Codes and/or local codes.

NOTE: The auxiliary junction box (J-Box) MUST be relocated to opposite side of furnace casing. (See Fig. 12.) See Electrical Connection section for J-Box relocation.

CONDENSATE TRAP LOCATION

The condensate trap must be removed from the factory-installed blower shelf location and relocated in selected application location as shown in Fig. 2 or 12.

To relocate condensate trap from the blower shelf to desired location, perform the following:

1. Remove 3 tubes connected to condensate trap.
2. Remove trap from blower shelf by gently pushing tabs inward and rotating trap
3. Install casing hole filler cap (factory-supplied in loose parts bag) into blower shelf hole where trap was removed.
4. Install condensate trap into left-hand side casing hole by inserting tube connection stubs through casing hole and rotating until tabs snap into locking position.
5. Fill unused condensate trap casing holes with plastic filler caps (factory-supplied in loose parts bag).

CONDENSATE TRAP TUBING

NOTE: See Fig. 12 or tube routing label on main furnace door to check for proper connections.

1. Collector Box Drain Tube:
   a. Remove factory-installed plug from LOWER collector box drain tube (blue and white striped label).
   b. Install removed clamp and plug into UPPER collector box drain tube (blue label) which was previously connected to condensate trap.

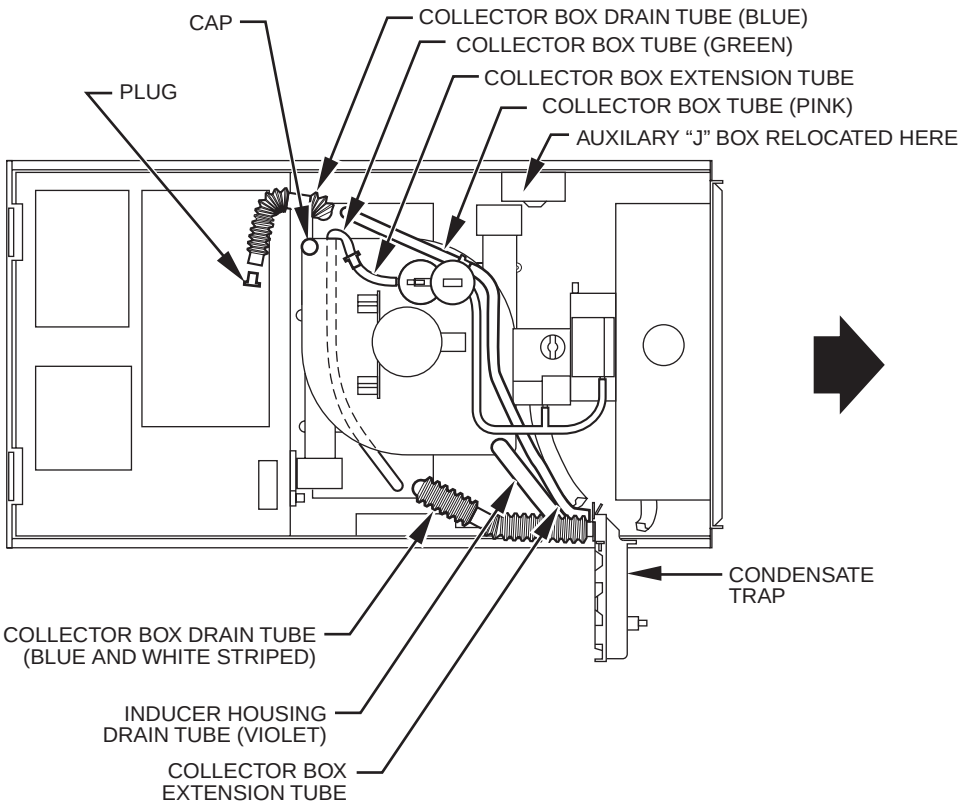

Fig. 12—Horizontal Right Tube Configuration

c. Connect LOWER collector box drain tube (blue and white striped label) to condensate trap. Tube does not need to be cut.

d. Clamp tube to prevent any condensate leakage.

2. Inducer Housing Drain Tube:

a. Remove factory-installed plug from LOWER collector box drain tube (blue and white striped label).

b. Remove and discard UPPER (molded) inducer housing drain tube which was previously connected to condensate trap.

c. Install cap and clamp on UPPER inducer housing drain connection where molded drain tube was removed.

d. Use inducer housing drain extension tube (violet label and factory-supplied in loose parts bag) to connect LOWER inducer housing drain connection to condensate trap.

e. Determine appropriate length, cut, and connect tube to condensate trap.

f. Clamp tube to prevent any condensate leakage.

3. Relief Port Tube:
Refer to Pressure Switch Tubing section for connection procedure.

CONDENSATE TRAP FIELD DRAIN ATTACHMENT

Refer to Condensate Drain section for recommendations and procedures.

PRESSURE SWITCH TUBING

One collector box pressure tube (pink label) is factory connected to the High Pressure Switch for use when furnace is installed in UPFLOW applications. This tube MUST be disconnected and used for the condensate trap relief port tube. The other collector box pressure tube (green label) which was factory connected to the condensate trap relief port connection MUST be connected to the High Pressure switch in DOWNFLOW or HORIZONTAL RIGHT applications.

NOTE: See Fig. 12 or tube routing label on main furnace door to check for proper connections.

Relocate tubes as described below.

1. Disconnect collector box pressure tube (pink label) attached to High Pressure Switch.
2. Extend collector box pressure tube (green label) which was previously connected to condensate trap relief port connection by splicing to small diameter tube (factory-supplied in loose parts bag).
3. Connect collector box pressure tube (green label) to High Pressure Switch connection labeled COLLECTOR BOX.
4. Use remaining smaller diameter tube (factory-supplied in loose parts bag) to extend collector box pressure tube (pink label) which was previously connected to High Pressure Switch. Route this extended tube (pink label) to condensate trap relief port connection.
5. Determine appropriate length, cut, and connect tube.
6. Clamp tube to relief port connection.

CONDENSATE TRAP FREEZE PROTECTION

Refer to Condensate Drain Protection section for recommendations and procedures

CONSTRUCT A WORKING PLATFORM

Construct working platform where all required furnace clearances are met. (See Fig. 3 and 11.)

⚠ CAUTION

The condensate trap MUST be installed below furnace. See Fig. 5 for dimensions. The drain connection to condensate trap must also be properly sloped to an open drain.

NOTE: Combustion-air and vent pipes are restricted to a minimum length of 5 ft. (See Table 7.)

NOTE: A 12-in. minimum offset pipe section is recommended with short (5 to 8 ft) vent systems. This recommendation is to reduce excessive condensate droplets from exiting the vent pipe. (See Fig. 11 or 35.)

LOCATION

Step 1—General

This furnace must

- be installed so the electrical components are protected from water.
- not be installed directly on any combustible material other than wood flooring (refer to SAFETY CONSIDERATIONS).
- be located so combustion-air and vent pipe maximum lengths are not exceeded. Refer to Table 7.
- be located where available electric power and gas supplies meet specifications on the furnace rating plate.
- be attached to an air distribution system and be located as close to the center of the distribution system as possible. Refer to Air Ducts section.
- be provided with ample space for servicing and cleaning. Always comply with minimum fire protection clearances shown on the furnace clearance to combustible label.

This furnace may be located in a confined space without special provisions for dilution or ventilation air.

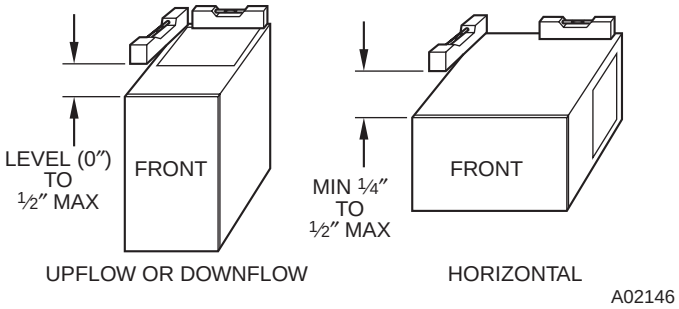

→ **Fig. 13—Proper Condensate Drainage**

NOTE: For upflow/downflow applications install furnace so that it is level or pitched forward within 1/2-in. for proper furnace operation. For horizontal applications pitch 1/4-in. minimum to 1/2-in. maximum to ensure proper condensate drainage from secondary heat exchangers. (See Fig. 13.)

When a furnace is installed so that supply ducts carry air to areas outside the space containing the furnace, return air must also be handled by ducts sealed to furnace casing. The ducts terminate outside the space containing the furnace to ensure there will not be a negative pressure condition will not occur within equipment room or space.

⚠ WARNING

Do **not** install furnace on its back. (See Fig. 14.) Safety control operation will be adversely affected. Never connect return-air ducts to back of furnace. Failure to follow this warning could result in fire, personal injury, or death.

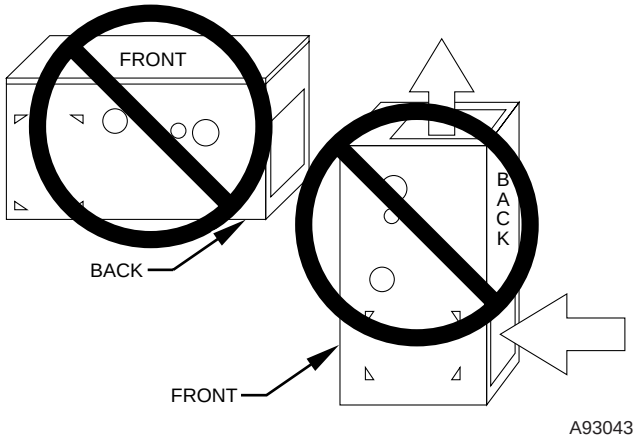

Fig. 14—Prohibit Installation on Back

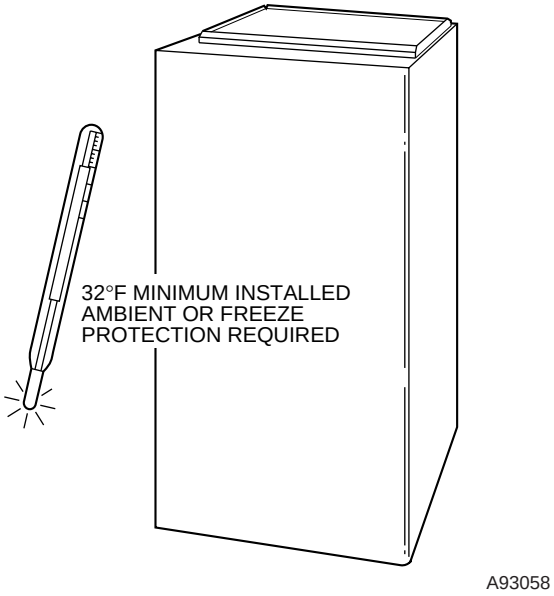

Fig. 15—Freeze Protection

⚠ CAUTION

Do **not** operate this furnace during construction. If the furnace is required for temporary heating of buildings or structures under construction, use clean outside air free of chlorine and fluorine compounds for combustion and ventilation. These compounds form acids that corrode the heat exchangers. These compounds are found in paneling and dry wall adhesives, paints, thinners, masonry cleaning materials, and many other materials.

⚠ CAUTION

If this furnace is installed in an unconditioned space where the ambient temperatures may be 32°F or lower, freeze protection measures must be taken. (See Fig. 15.)

Step 2—Furnace Location Relative to Cooling Equipment

The cooling coil must be installed parallel with or on downstream side of furnace to avoid condensation in heat exchanger. When installed parallel with a furnace, dampers or other means used to control flow of air shall be adequate to prevent chilled air from entering furnace. If dampers are manually operated, they must be equipped with a means to prevent operation of either unit unless the damper is in full-heat or full-cool position.

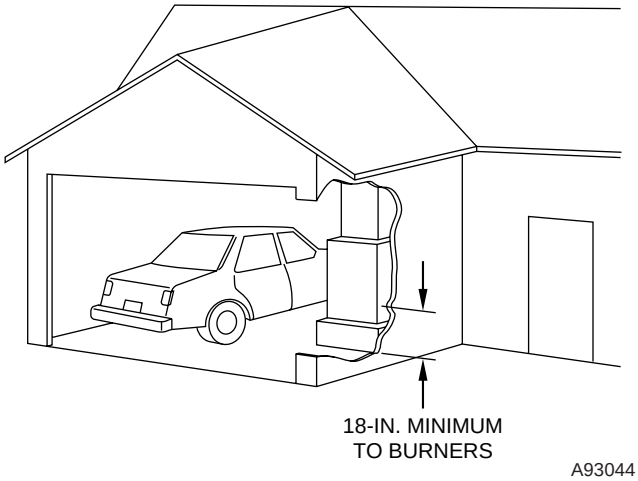

Fig. 16—Installation in a Garage

Step 3—Hazardous Locations

⚠ WARNING

When the furnace is installed in a residential garage, the burners and ignition sources must be located at least 18 in. above the floor. The furnace must be located or protected to avoid physical damage by vehicles. When the furnace is installed in a public garage, airplane hangar, or other building having a hazardous atmosphere, the furnace must be installed in accordance with the NFGC or NSCNGPIC. (See Fig. 16.)

INSTALLATION

Step 1—Leveling Legs (If Desired)

When furnace is used in upflow position with side inlet(s), leveling legs may be desired. (See Fig. 17.) Install field-supplied, corrosion-resistant 5/16-in. machine bolts and nuts.

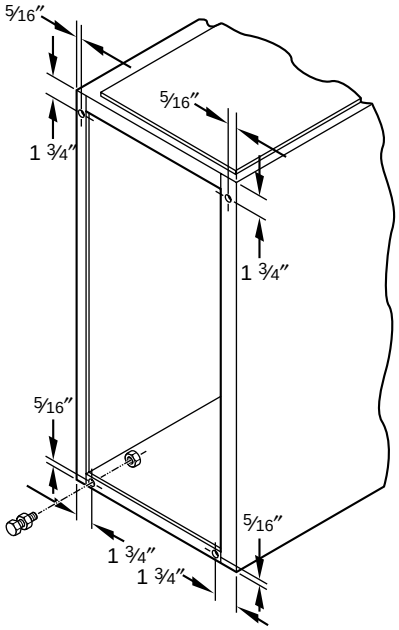

Fig. 17—Leveling Legs

NOTE: The maximum length of bolt should not exceed 1-1/2 in.

1. Position furnace on its back. Locate and drill a 5/16-in. diameter hole in each bottom corner of furnace. (See Fig. 17.) Holes in bottom closure panel may be used as guide locations.
2. For each hole, install nut on bolt and then install bolt and nut in hole. (Install flat washer if desired.)
3. Install another nut on other side of furnace base. (Install flat washer if desired.)
4. Adjust outside nut to provide desired height, and tighten inside nut to secure arrangement.

NOTE: Bottom closure must be used when leveling legs are used. See Bottom Closure Panel section.

Step 2—Installation in Upflow and Downflow Applications

NOTE: For downflow applications, this furnace is approved for use on combustible flooring when special base (available from manufacturer) Part No. KGASB0201ALL is used. Special base is not required when this furnace is installed on manufacturer's Coil Assembly Part No. CD5 or CK5, or Coil Box Part No. KCAKC is used.

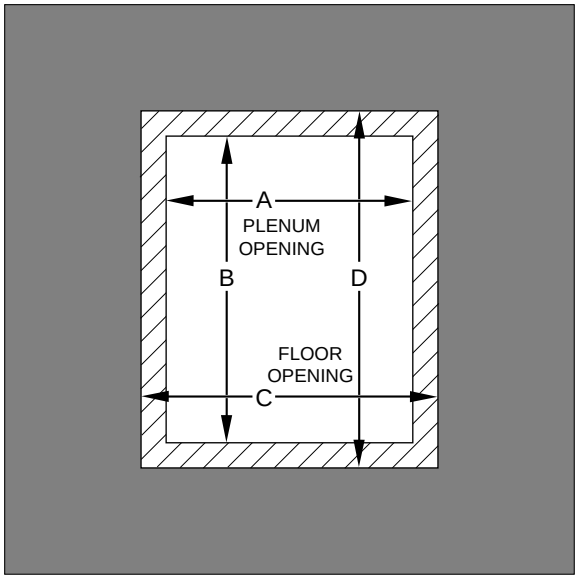

Fig. 18—Floor and Plenum Opening Dimensions

1. Determine application being installed from Table 1.
2. Construct hole in floor per dimensions specified in Table 1 and Fig. 18.
3. Construct plenum to dimensions specified in Table 1 and Fig. 18.
4. If downflow subbase (KGASB) is used, install as shown in Fig. 19. If Coil Assembly Part No. CD5 or CK5 or Coil Box Part No. KCAKC is used, install as shown in Fig. 20.

NOTE: Remove furnace perforated, supply-air duct flanges when they interfere with mating flanges on coil or downflow subbase. To remove perforated, supply-air duct flanges, use wide duct pliers, duct flange tool, or hand seamers to bend flange back and forth until it breaks off. Be careful of sharp edges. (See Fig. 21.)

TABLE 1—OPENING DIMENSIONS (IN.)

FURNACE CASING WIDTH	APPLICATION	PLENUM OPENING		FLOOR OPENING	
		A	B	C	D
17-1/2	Upflow Applications	16	24–1/8	16–5/8	24–3/4
	Downflow Applications on Non-Combustible Flooring	15-7/8	19	16-1/2	19-5/8
	Downflow Applications on Combustible Flooring Using KGASB Subbase Furnace with or without CD5 or CK5 Coil Assembly or KCAKC Coil Box	15-1/8	19	16-3/4	20-3/8
	Downflow Applications on Combustible Flooring NOT Using KGASB Subbase Furnace with or without CD5 or CK5 Coil Assembly or KCAKC Coil Box	15-1/2	19	16-1/2	20
21	Upflow Applications	19-1/2	24-1/8	20-1/8	24-3/4
	Downflow Applications on Non-Combustible Flooring	19-3/8	19	20	19-5/8
	Downflow Applications on Combustible Flooring Using KGASB Subbase Furnace with or without CD5 or CK5 Coil Assembly or KCAKC Coil Box	18-5/8	19	20-1/4	20-3/8
	Downflow Applications on Combustible Flooring NOT Using KGASB Subbase Furnace with or without CD5 or CK5 Coil Assembly or KCAKC Coil Box	19	19	20	20
24-1/2	Upflow Applications	23	24-1/8	23-5/8	24-3/4
	Downflow Applications on Non-Combustible Flooring	22-7/8	19	23-1/2	19-5/8
	Downflow Applications on Combustible Flooring Using KGASB Subbase Furnace with or without CD5 or CK5 Coil Assembly or KCAKC Coil Box	22-1/8	19	23-3/4	20-3/8
	Downflow Applications on Combustible Flooring NOT Using KGASB Subbase Furnace with or without CD5 or CK5 Coil Assembly or KCAKC Coil Box	22-1/2	19	23-1/2	20

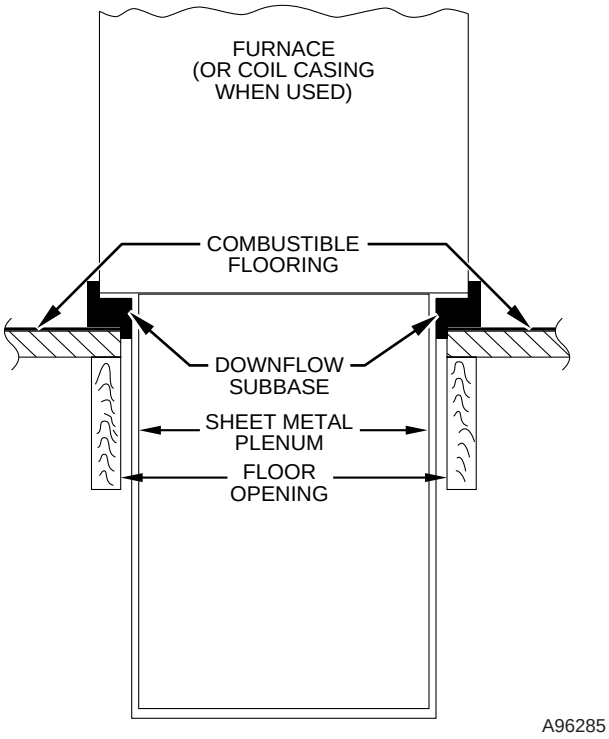

Fig. 19—Furnace, Plenum, and Subbase Installed on a Combustible Floor

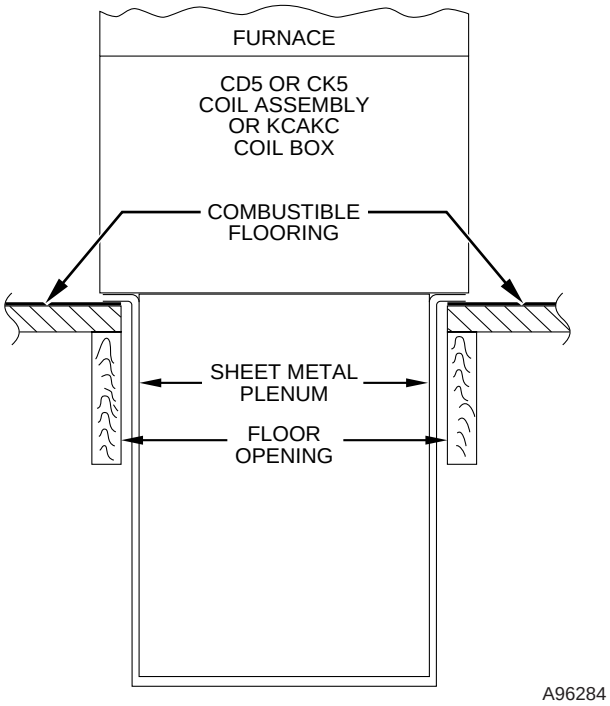

Fig. 20—Furnace, Plenum, and Coil Assembly or Coil Box Installed on a Combustible Floor

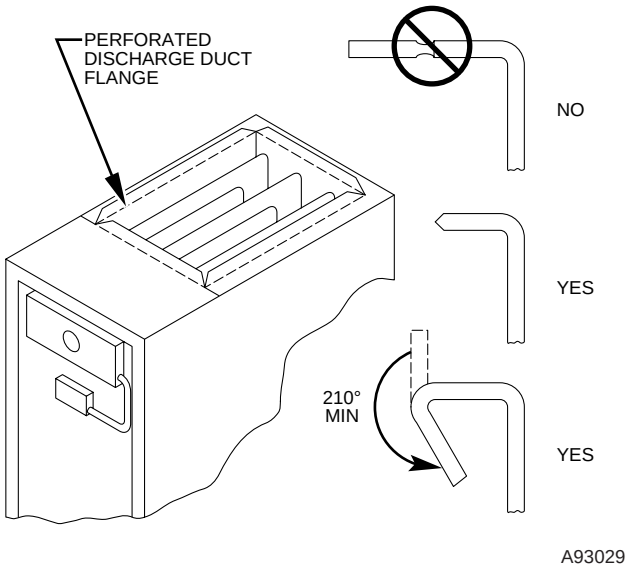

Fig. 21—Duct Flanges

⚠ WARNING

Do not bend duct flanges inward as shown in Fig. 21. This will affect airflow across heat exchangers and may cause limit cycling or premature heat exchanger failure. Remove duct flange completely or bend it inward a minimum of 210° as shown in Fig. 21.

Step 3—Installation in Horizontal Applications

These furnaces can be installed horizontally in either horizontal left or right discharge position. In a crawlspace, the furnace can either be hung from floor joist or installed on suitable blocks or pad. Furnace can be suspended from each corner by hanger bolts and angle iron supports. (See Fig. 22.) Cut hanger bolts (4 each 3/8-in. all-thread rod) to desired length. Use 1 X 3/8-in. flat washers, 3/8-in. lock washers, and 3/8-in. nuts on hanger rods as shown in Fig. 22. Dimples are provided for hole locations. (See Fig. 2.)

⚠ CAUTION

The entire length of furnace MUST be supported when furnace is used in a horizontal position to ensure proper draining. When suspended, bottom brace supports sides and center blower shelf. When unit is supported from the ground, blocks or pad should support sides and center blower shelf area.

Step 4—Air Ducts

GENERAL REQUIREMENTS

The duct system should be designed and sized according to accepted national standards such as those published by: Air Conditioning Contractors Association (ACCA), Sheet Metal and Air Conditioning Contractors National Association (SMACNA) or American Society of Heating, Refrigerating and Air Conditioning Engineers (ASHRAE), or consult The Air Systems Design Guidelines reference tables available from your local distributor. The duct system should be sized to handle the required system design CFM at the design static pressure.

When a furnace is installed so that the supply ducts carry air circulated by the furnace to areas outside the space containing the furnace, the return air must also be handled by a duct(s) sealed to the furnace casing and terminating outside the space containing the furnace.

Secure ductwork with proper fasteners for type of ductwork used. Seal supply- and return-duct connections to furnace with code approved tape or duct sealer.

Flexible connections should be used between ductwork and furnace to prevent transmission of vibration. Ductwork passing through unconditioned space should be insulated to enhance system performance. When air conditioning is used, a vapor barrier is recommended.

Maintain a 1-in. clearance from combustible materials to supply air ductwork for a distance of 36 in. horizontally from the furnace. See NFPA 90B or local code for further requirements.

→ For a furnace not equipped with a cooling coil, the outlet duct shall be provided with a removable access panel. This opening shall be accessible when the furnace is installed and shall be of such a size that the heat exchanger can be viewed for possible openings using light assistance or a probe can be inserted for sampling the air stream. The cover attachment shall prevent leaks.

DUCTWORK ACOUSTICAL TREATMENT

Metal duct systems that do not have a 90 degree elbow and 10 ft of main duct to the first branch take-off may require internal acoustical lining. As an alternative, fibrous ductwork may be used if constructed and installed in accordance with the latest edition of SMACNA construction standard on fibrous glass ducts. Both acoustical lining and fibrous ductwork shall comply with NFPA 90B as tested by UL Standard 181 for Class 1 Rigid air ducts.

SUPPLY AIR CONNECTIONS

Upflow Furnaces

Connect supply-air duct to 3/4-in. flange on furnace supply-air outlet. The supply-air duct attachment must ONLY be connected to furnace supply-/outlet-air duct flanges or air conditioning coil casing (when used). DO NOT cut main furnace casing to attach supply side air duct, humidifier, or other accessories. All accessories MUST be connected external to furnace main casing.

Downflow Furnaces

Connect supply-air duct to supply-air opening on furnace. The supply-air duct attachment must ONLY be connected to furnace supply/outlet or air conditioning coil casing (when used), when installed on non-combustible material. When installed on combustible material, supply-air duct attachment must ONLY be connected to an accessory subbase or factory approved air conditioning coil casing. DO NOT cut main furnace casing to attach supply side air duct, humidifier, or other accessories. All accessories MUST be connected external to furnace main casing. Supply air opening duct flanges must be modified per Fig. 21.

Horizontal Furnaces

Connect supply-air duct to supply air opening on furnace. The supply-air duct attachment must ONLY be connected to furnace supply/outlet or air conditioning coil casing (when used). DO NOT cut main furnace casing to attach supply side air duct, humidifier, or other accessories. All accessories MUST be connected external to furnace main casing.

RETURN AIR CONNECTIONS

⚠ WARNING

Never connect return-air ducts to the back of the furnace. Return-air duct connections on furnace side(s) permitted in upflow applications only. A failure to follow this warning could result in fire, personal injury, or death.

Upflow Furnaces

The return-air duct must be connected to bottom, sides (left or right), or a combination of bottom and side(s) of main furnace

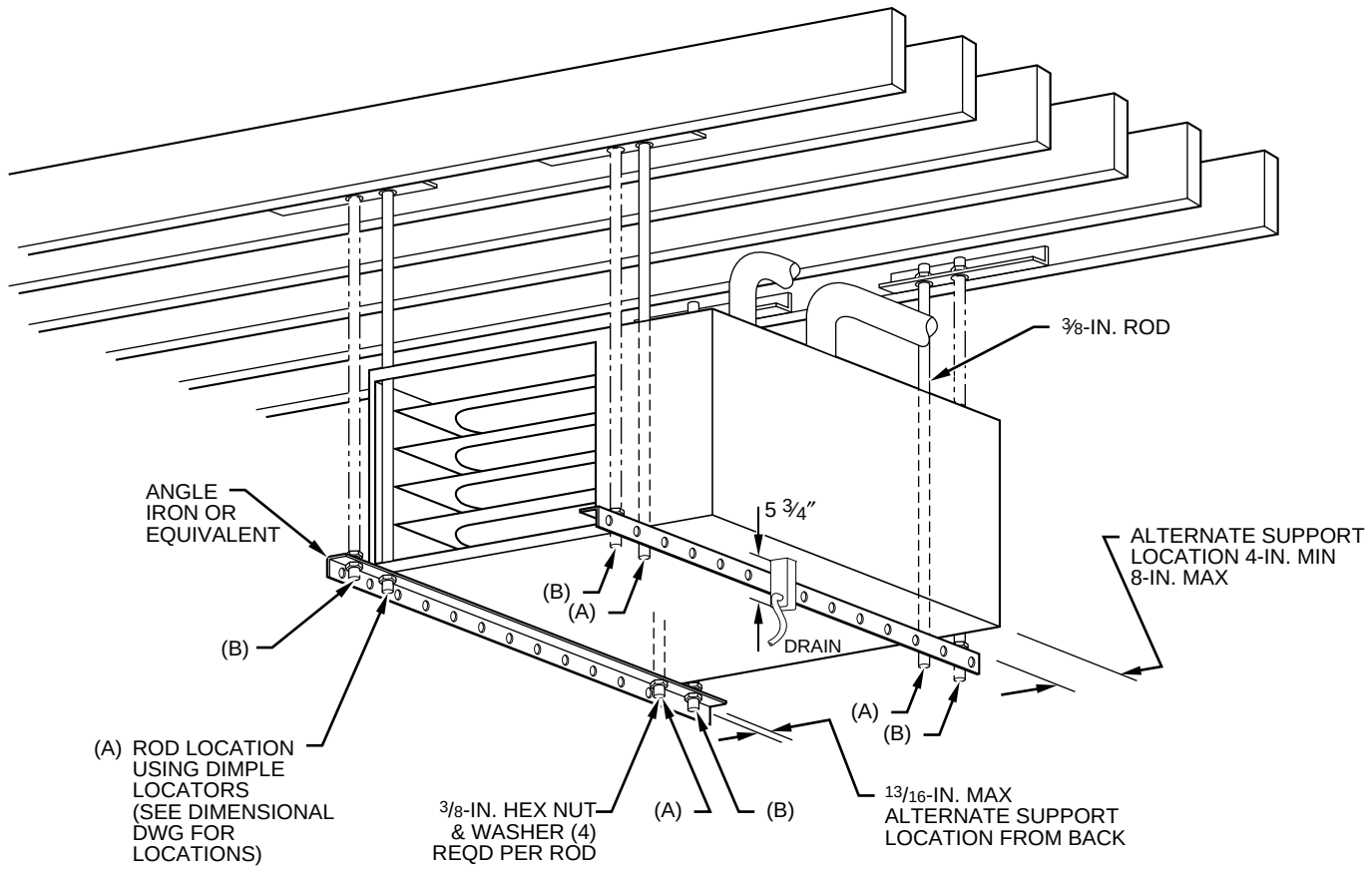

(A) PREFERRED ROD LOCATION

(B) ALTERNATE ROD LOCATION

NOTES: 1. A 1 In. clearance minimum between top of furnace and combustible material.

2. The entire length of furnace must be supported when furnace is used in horizontal position to ensure proper drainage.

A93304

Fig. 22—Crawlspace Horizontal Application

casing. Bypass humidifier may be attached into unused side return air portion of the furnace casing. DO NOT connect any portion of return-air duct to back of furnace casing.

Downflow and Horizontal Furnaces

The return-air duct must be connected to return-air opening provided. DO NOT cut into casing sides or back to attach any portion of return-air duct. Bypass humidifier connections should be made at ductwork or coil casing sides exterior to furnace.

Step 5—Filter Arrangement

⚠ WARNING

Never operate unit without a filter or with filter access door removed. Failure to follow this warning can cause fire, personal injury, or death.

The air filter arrangement will vary due to application, furnace orientation, and filter type. The filter may be installed in an external Filter/Media cabinet (if provided) or the furnace blower compartment. Factory supplied washable filters are shipped in the blower compartment.

If a factory-supplied external Filter/Media cabinet is provided, instructions for its application, assembly, and installation are packaged with the cabinet. The Filter/Media cabinet can be used with the factory-supplied washable filter or a factory-specified high-efficiency disposable filter (see cabinet instructions).

If installing the filter in the furnace blower compartment, determine location for filter and relocate filter retaining wire if necessary. See Table 2 to determine correct filter size for desired filter location. Table 2 indicates filter size, location, and quantity shipped with this furnace. See Fig. 2 for location and size of bottom and side return-air openings.

Table 2—FILTER INFORMATION

AIR FILTER LOCATED IN BLOWER COMPARTMENT			
FURNACE CASING WIDTH (IN.)	FILTER SIZE (IN.)*		FILTER TYPE
	Side Return	Bottom Return	
17-1/2	(1) 16 X 25 X 1†	(1) 16 X 25 X 1†	Cleanable
21	(1) 16 X 25 X 1	(1) 20 X 25 X 1†	Cleanable
24-1/2	(1 or 2) 16 X 25 X 1	(1) 24 X 25 X 1†	Cleanable

* Filters may be field modified by cutting filter material and support rods (3) in filters. Alternate sizes and additional filters may be ordered from your dealer.
† Factory-provided with furnace.

⚠ CAUTION

Use care when cutting support rods in filters to protect against flying pieces and sharp rod ends. Wear safety glasses, gloves, and appropriate protective clothing. Failure to follow this caution could result in personal injury.

⚠ CAUTION

For airflow requirements above 1800 CFM, see Air Delivery table in Product Data literature for specific use of single side inlets. The use of both side inlets, a combination of 1 side and the bottom, or the bottom only will ensure adequate return air openings for airflow requirements above 1800 CFM.

NOTE: Side return-air openings can ONLY be used in UPFLOW configurations. Install filter(s) as shown in Fig. 23. Bottom return-air opening may be used with all 4 orientations. Filter may need to be cut to fit some furnace widths. Install filter as shown in Fig. 24.

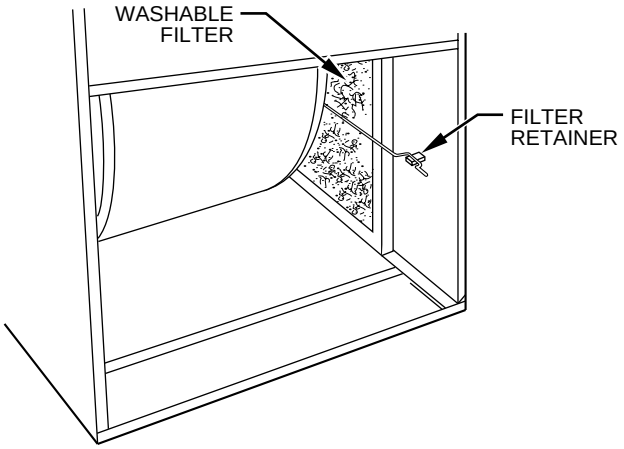

Fig. 23—Filter Installed for Side Inlet

NOTE: Remove and discard bottom closure panel when bottom inlet is used.

Step 6—Bottom Closure Panel

This furnace is shipped with bottom closure panel installed in bottom return-air opening. This panel MUST be in place when side return air is used.

To remove bottom closure panel, perform the following:

1. Tilt or raise furnace and remove 2 screws holding front filler panel. (See Fig. 25.)
2. Rotate front filler panel downward to release holding tabs.
3. Remove bottom closure panel.
4. Reinstall front filler panel and screws.

Step 7—Gas Piping

Gas piping must be installed in accordance with national and local codes. Refer to current edition of NFGC in the United States.

Canadian installations must be made in accordance with NSCNG-PIC and all authorities having jurisdiction.

Gas supply line should be a separate line running directly from meter to furnace, if possible. Refer to Table 3 for recommended gas pipe sizing.

Risers must be used to connect to furnace and to meter. Support all gas piping with appropriate straps, hangers, etc. Use a minimum of 1 hanger every 6 ft. Joint compound (pipe dope) should be applied sparingly and only to male threads of joints. Pipe dope must be resistant to propane gas.

⚠ CAUTION

Connect gas pipe to furnace using a backup wrench to avoid damaging gas controls.

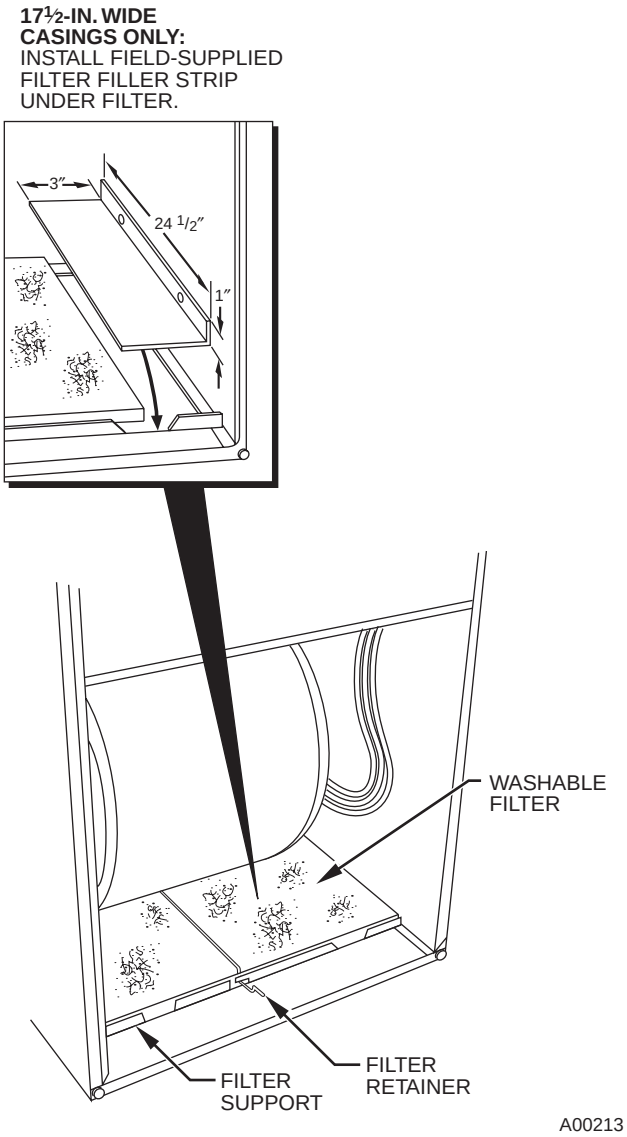

Fig. 24—Bottom Filter Arrangement

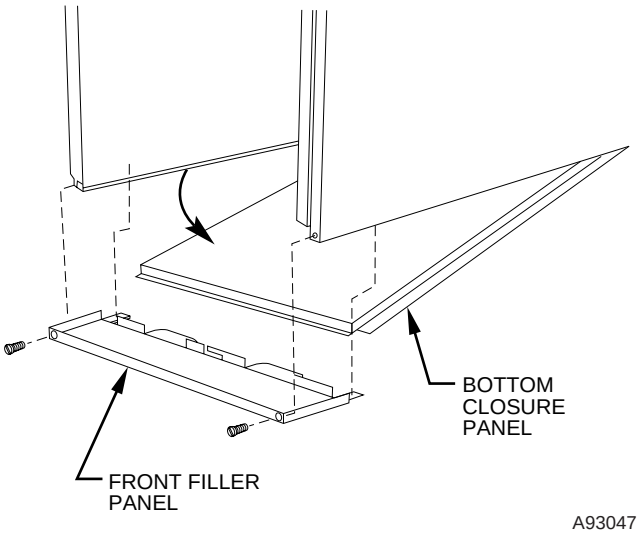

Fig. 25—Removing Bottom Closure Panel

Table 3—MAXIMUM CAPACITY OF PIPE*

NOMINAL IRON PIPE SIZE (IN.)	INTERNAL DIAMETER (IN.)	LENGTH OF PIPE (FT)				
		10	20	30	40	50
1/2	0.622	175	120	97	82	73
3/4	0.824	360	250	200	170	151
1	1.049	680	465	375	320	285
1-1/4	1.380	1400	950	770	660	580
1-1/2	1.610	2100	1460	1180	990	900

* Cubic ft of gas per hr. for gas pressures of 0.5 psig (14–in. wc) or less and a pressure drop of 0.5–in wc (based on a 0.60 specific gravity gas).
Ref: NFGC.

⚠ WARNING

Gas valve shutoff switch MUST be facing forward or tilted upward. Failure to follow this warning could result in property damage or death.

⚠ WARNING

→ Never purge a gas line into a combustion chamber. Never test for gas leaks with an open flame. Use a commercially available soap solution made specifically for the detection of leaks to check all connections, as specified in "Adjustments" section. Failure to follow this warning could result in fire, explosion, personal injury, or death.

⚠ WARNING

Use proper length of pipe to avoid stress on gas control manifold. Failure to follow this warning could result in a gas leak resulting in fire, explosion, personal injury, or death.

Install a sediment trap in riser leading to furnace. Trap can be installed by connecting a tee to riser leading to furnace so straight-through section of tee is vertical. Then connect a capped nipple into lower end of tee. Capped nipple should extend below level of gas controls. Place a ground joint union between gas control manifold and manual gas shutoff valve. (See Fig. 26.)

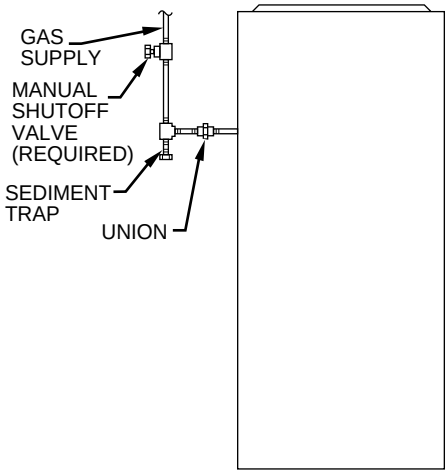

A93324

Fig. 26—Typical Gas Pipe Arrangement

⚠ CAUTION

If a flexible connector is required or allowed by authority having jurisdiction, black iron pipe shall be installed at gas valve and extend a minimum of 2 in. outside furnace casing.

→ If local codes allow the use of a flexible gas appliance connector, always use a new listed connector. Do not use a connector which has previously serviced another gas appliance.

⚠ WARNING

→ FIRE OR EXPLOSION HAZARD
Failure to follow the safety warnings exactly could result in serious injury, death or property damage.
Never test for gas leaks with an open flame. Use a commercially available soap solution made specifically for the detection of leaks to check all connections. A fire or explosion may result causing property damage, personal injury or loss of life.

An accessible manual shutoff valve MUST be installed external to furnace casing and within 6 ft of furnace. A 1/8-in. NPT plugged tapping, accessible for test gage connection, MUST be installed immediately upstream of gas supply connection to furnace and downstream of manual shutoff valve.

Piping should be pressure tested in accordance with NFGC, local and national plumbing and gas codes before the furnace has been connected. In Canada, refer to current edition of NSCNGPIC. If the pressure exceeds 0.5 psig (14-in. wc), gas supply pipe must be disconnected from the furnace and capped before pressure test. If test pressure is equal to or less than 0.5 psig (14-in. wc), turn off electric shutoff switch located on gas valve before test. It is recommended that the ground joint union be loosened before pressure testing.

After all connections have been made, purge lines and check for leakage.

NOTE: The gas valve inlet press tap connection is suitable to use as test gage connection providing test pressure DOES NOT exceed maximum 0.5 psig (14-in. wc) stated on gas valve. (See Fig. 53.)

→ The gas supply pressure shall be within the maximum and minimum inlet supply pressures marked on the rating plate with the furnace burners ON at HI-HEAT and OFF.

Step 8—Electrical Connections

See Fig. 27, 28, and 50A-H for field wiring diagram showing typical field 115-v and 24-v wiring. Check all factory and field electrical connections for tightness.

⚠ WARNING

Blower access door switch opens 115-v power to furnace control. No component operation can occur. Do not bypass or close switch with panel removed. Failure to follow this warning could result in personal injury or death.

→ Field-supplied wiring shall conform with the limitations of 63 degrees F rise.

⚠ CAUTION

Furnace control must be grounded for proper operation or control will lock out. Control is grounded through green/yellow wire routed to gas valve C-terminal and burner box screw.

115-V WIRING

Before proceeding with electrical connections, make certain that voltage, frequency, and phase correspond to that specified on the

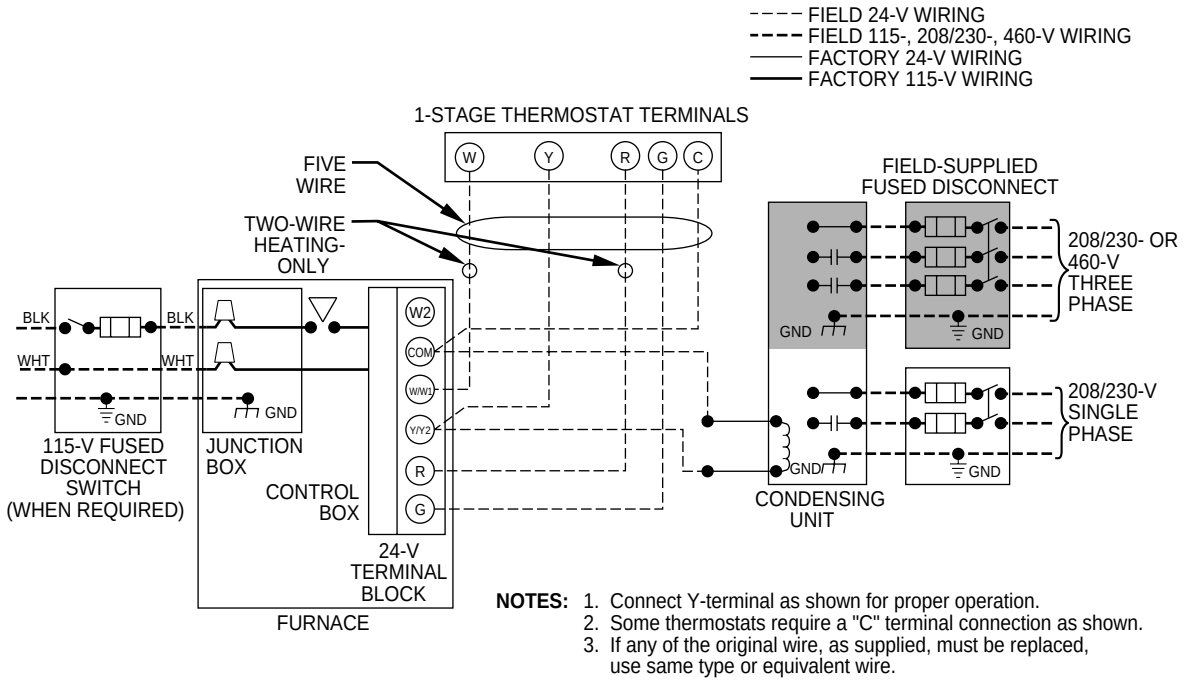

A99071

Fig. 27—Heating and Cooling Application Wiring Diagram 1-Stage Thermostat and Condensing Unit

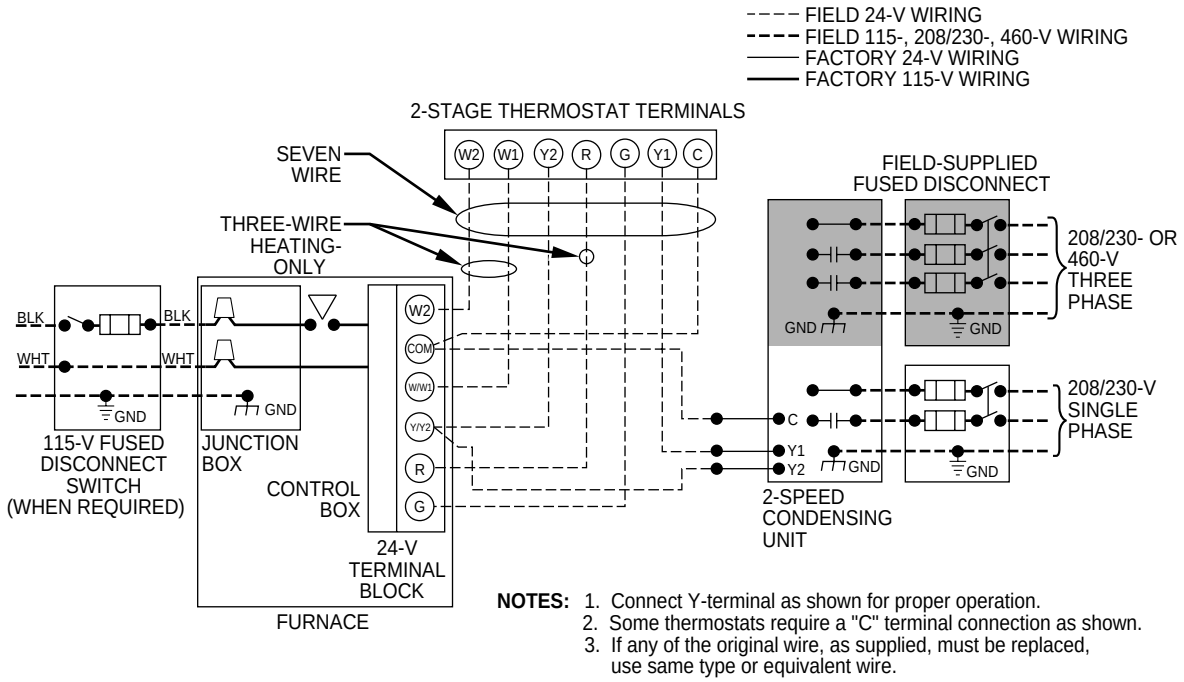

A99072

Fig. 28—Heating and Cooling Application Wiring Diagram 2-Stage Thermostat and Condensing Unit

furnace rating plate. Also, check to be sure that service provided by power supply is sufficient to handle load imposed by this equipment. Refer to rating plate or Table 4 for equipment electrical specifications.

For U.S. installations, make all electrical connections in accordance with National Electrical Code (NEC) ANSI/NFPA 70-2002 and any local codes or ordinances that might apply. For Canadian

Table 4—ELECTRICAL DATA

UNIT SIZE	VOLTS—HERTZ—PHASE	OPERATING VOLTAGE RANGE		MAX UNIT AMPS	UNIT AMPACITY†	MIN WIRE SIZE	MAX WIRE LENGTH (FT)‡	MAX FUSE OR CKT BKR AMPS**
		Max*	Min*					
060–12	115-60-1	127	104	8.4	11.3	14	33	15
080–12	115-60-1	127	104	8.1	10.8	14	34	15
080–16	115-60-1	127	104	11.6	15.3	12	37	20
100–16	115-60-1	127	104	11.6	15.4	12	37	20
100–20	115-60-1	127	104	13.3	17.5	12	33	20
120–20	115-60-1	127	104	12.9	16.8	12	34	20

* Permissible limits of voltage range at which unit will operate satisfactorily.
† Unit ampacity = 125 percent of largest operating component's full load amps plus 100 percent of all other potential operating components' (EAC, humidifier, etc.) full load amps.
‡ Length shown is measured 1 way along wire path between unit and service panel for maximum 2 percent voltage drop.
** Time-delay type is recommended.

installations, all electrical connections must be made in accordance with Canadian Electrical Code CSA C22.1 or authorities having jurisdiction.

Use a separate branch electrical circuit containing a properly sized fuse or circuit breaker for this furnace. See Table 4 for wire size and fuse specifications. A disconnecting means must be located within sight from and readily accessible to furnace.

NOTE: Proper polarity must be maintained for 115-v wiring. If polarity is incorrect, control LED status indicator light will flash rapidly and furnace will NOT operate.

⚠ CAUTION

Do not connect aluminum wire between disconnect switch and furnace. Use only copper wire. (See Fig. 29.)

⚠ WARNING

The furnace casing MUST have an uninterrupted or unbroken ground according to NEC ANSI/NFPA 70-2002 and Canadian Electrical Code CSA C22.1 or local codes to minimize personal injury if an electrical fault should occur. This may consist of electrical wire or conduit approved for electrical ground when installed in accordance with existing electrical codes. Do not use gas piping as an electrical ground. Failure to follow this warning could result in electrical shock, fire, or death.

J-Box Relocation

1. Remove 2 screws holding auxiliary J-box. (See Fig. 30.)
2. Rotate J-box 180° and attach box to left side, using holes provided.

⚠ CAUTION

If manual disconnect switch is to be mounted on furnace, select a location where a drill or fastener will not contact electrical or gas components.

24-V WIRING

Make field 24-v connections at 24-v terminal block. (See Fig. 32.) Connect terminal Y/Y2 as shown in Fig. 27 and 28 for proper cooling operation. Use only AWG No. 18, color-coded, copper thermostat wire for lengths up to 100 ft. For wire lengths over 100 ft, use AWG No. 16 wire.

The 24-v circuit contains an automotive-type, 3-amp fuse located on control (See Fig. 32.) Any direct shorts of 24-v wiring during installation, service, or maintenance could cause this fuse to blow.

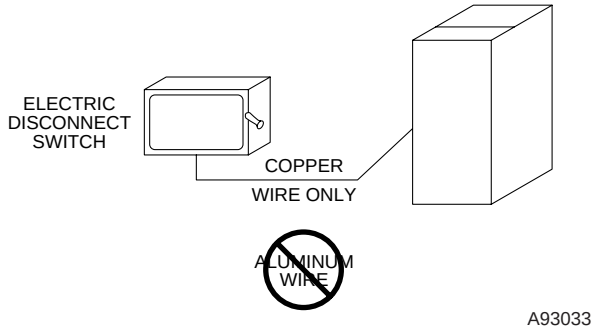

Fig. 29—Disconnect Switch and Furnace

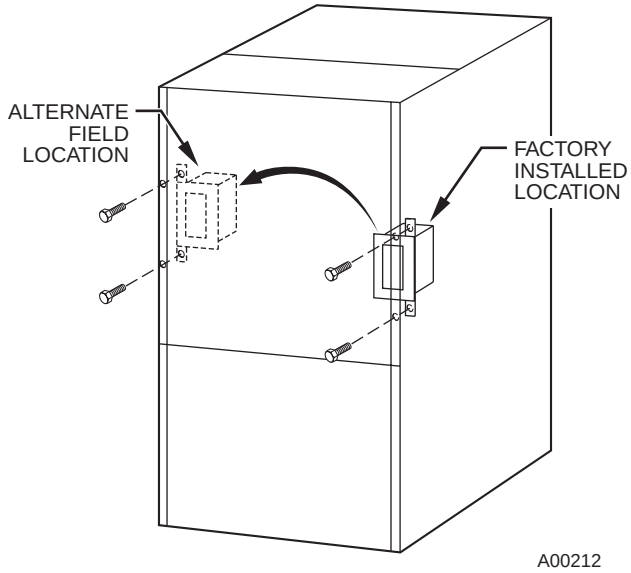

Fig. 30—Relocating J-Box

If fuse replacement is required, use ONLY a 3-amp fuse of identical size/type. The control will flash code 24 when fuse needs replacement.

ACCESSORIES

1. Electronic Air Cleaner (EAC)
   Two male quick-connect terminals marked EAC-1 and EAC-2 are provided for EAC connection. (See Fig. 32.) These terminals are energized with 115-v (1.0-amp maximum) during blower motor operation.
2. Humidifier (HUM)
   → Connect an accessory 24 VAC, 0.5 amp maximum humidifier (if used) to the 1/4-in. male quick-connect HUM terminal and COM-24V screw terminal on the control board thermostat

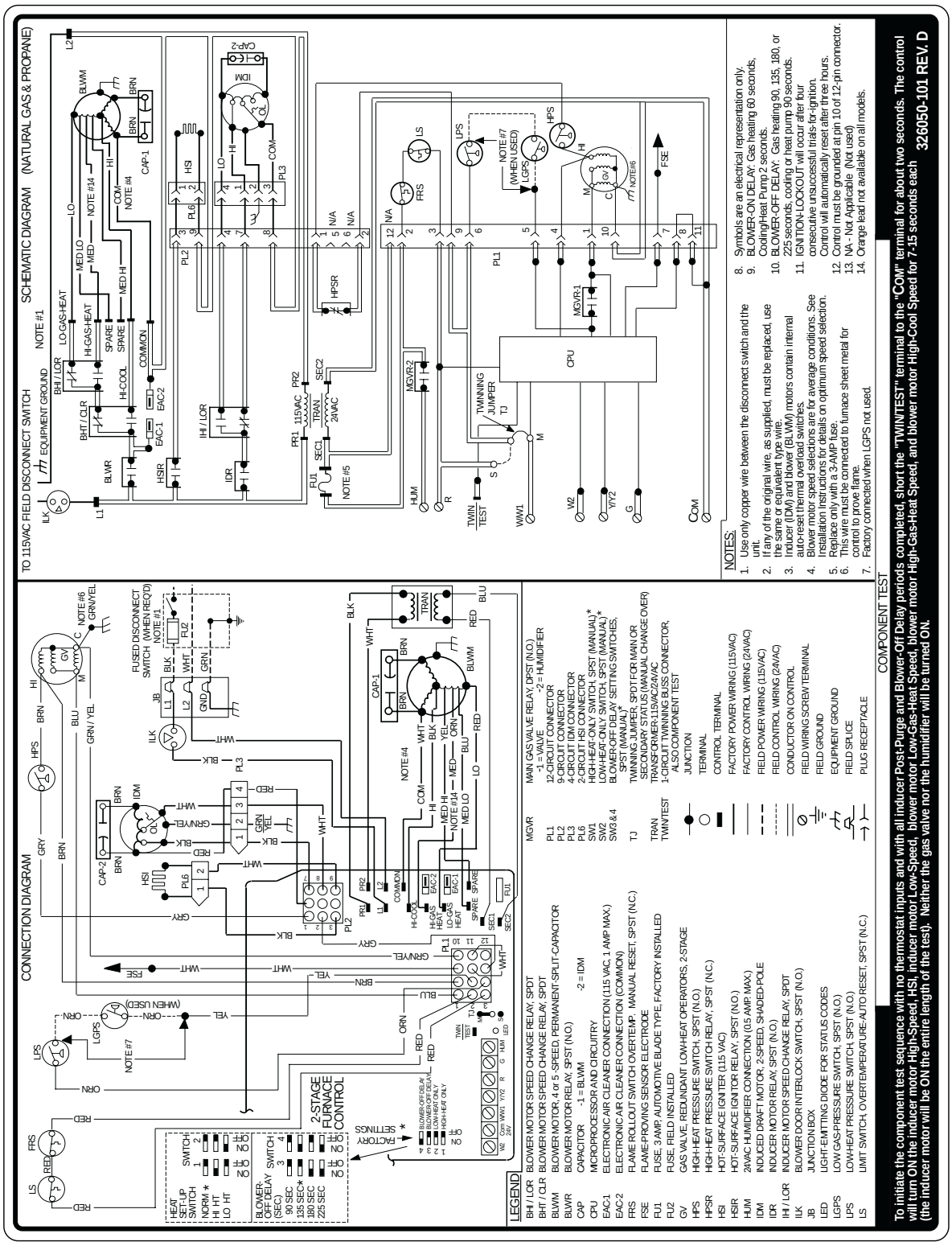

A02145

Fig. 31—Wiring Diagram

strip. The HUM terminal is energized when gas valve is energized. See Fig. 31 or 32.

NOTE: A field-supplied, 115–v controlled relay connected to EAC terminals may be added if humidifier operation is desired during blower operation.

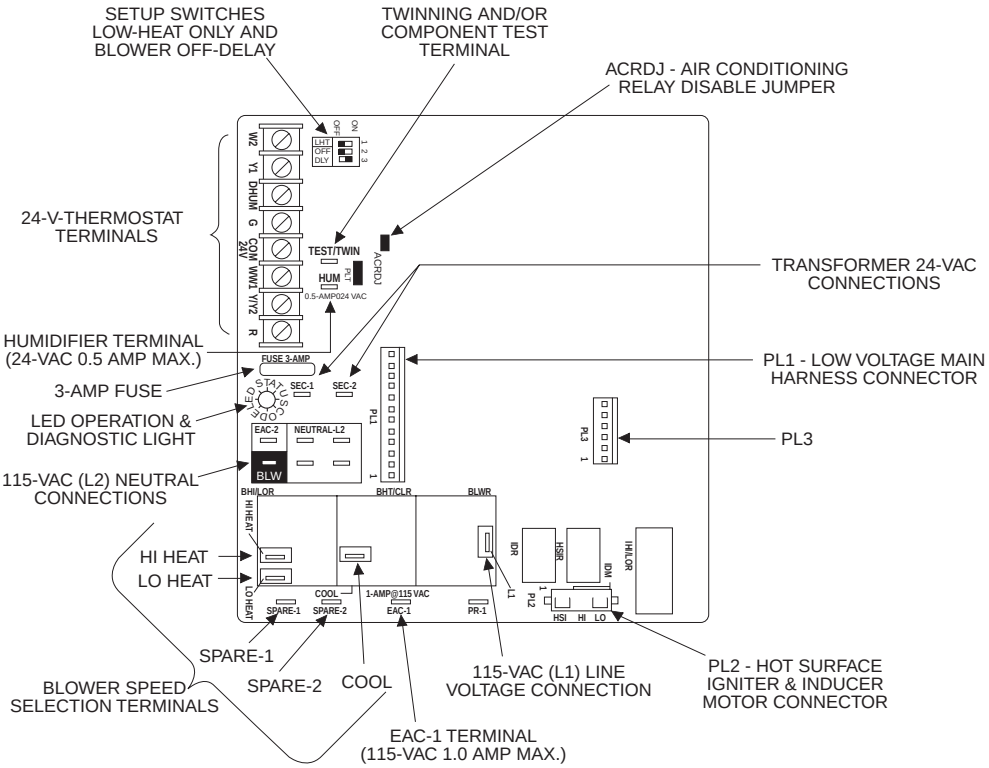

→ **Fig. 32—2-Stage Furnace Control**

⚠ WARNING

DO NOT connect furnace control HUM terminal to HUM (humidifier) terminal on Thermidistat™, Zone Controller or similar device. See Thermidistat™, Zone Controller, thermostat, or controller manufacturer's instructions for proper connection. A failure to follow this warning could result in fire.

Step 9—Direct Venting

The 58MTA furnace requires a dedicated (one 58MTA furnace only) direct-vent system. In a direct-vent system, all air for combustion is taken directly from outdoor atmosphere, and all flue gases are discharged to outdoor atmosphere.

REMOVAL OF EXISTING FURNACES FROM COMMON VENT SYSTEMS

If furnace being replaced was connected to a common vent system with other appliances, the original venting system may no longer be sized to properly vent the attached appliance.

⚠ WARNING

→ CARBON MONOXIDE POISONING HAZARD

Failure to follow the steps outlined below for each appliance connected to the venting system being placed into operation could result in carbon monoxide poisoning or death.

The following steps shall be followed for each appliance connected to the venting system being placed into operation, while all other appliances connected to the venting system are not in operation:

1. Seal any unused openings in venting system.
2. Inspect the venting system for proper size and horizontal pitch, as required in the National Fuel Gas Code, ANSI Z223.1/NFPA 54 or the CSA B149.1, Natural Gas and Propane Installation Code and these instructions. Determine that there is no blockage or restriction, leakage, corrosion and other deficiencies, which could cause an unsafe condition.
3. As far as practical, close all building doors and windows and all doors between the space in which the appliance(s) connected to the venting system are located and other spaces of the building.
4. Close fireplace dampers.
5. Turn on clothes dryers and any appliance not connected to the venting system. Turn on any exhaust fans, such as range hoods and bathroom exhausts, so they are operating at maximum speed. Do not operate a summer exhaust fan.
6. Follow the lighting instructions. Place the appliance being inspected into operation. Adjust the thermostat so appliance is operating continuously.
7. Test for spillage from draft hood equipped appliances at the draft hood relief opening after 5 minutes of main burner operation. Use the flame of a match or candle.
8. If improper venting is observed during any of the above tests, the venting system must be corrected in accordance with the National Fuel Gas Code, ANSI Z223.1/NFPA 54 and/or CSA B149.1, Natural Gas and Propane Installation Codes.
9. After it has been determined that each appliance connected to the venting system properly vents when tested as outlined above, return doors, windows, exhaust fans, fireplace dampers and any other gas-fired burning appliance to their previous conditions of use.

Vent system or vent connectors may need to be resized. For any other appliances when resizing vent systems or vent connectors, system or connector must be sized to approach minimum size as determined using appropriate table found in the NFGC or NSC-NGPIC.

COMBUSTION-AIR AND VENT PIPING

General

Combustion-air and vent pipe, fittings, primers, and solvents must conform to American National Standards Institute (ANSI) standards and American Society for Testing and Materials (ASTM) standards. See Table 5 for approved materials for use in the U.S.A. See Table 7 for maximum pipe lengths and Fig. 37, 38, 39, 40, and 41 for exterior piping arrangements.

In Canada, construct all combustion-air and vent pipes for this unit of CSA or ULC certified schedule-40 PVC, PVC-DWV or ABS-DWV pipe and pipe cement. SDR pipe is NOT approved in Canada.

NOTE: Furnace combustion-air and vent pipe connections are sized for 2-in. pipe. Any pipe size change should be made outside furnace casing in vertical pipe. (See Fig. 33.) This allows proper drainage of vent condensate.

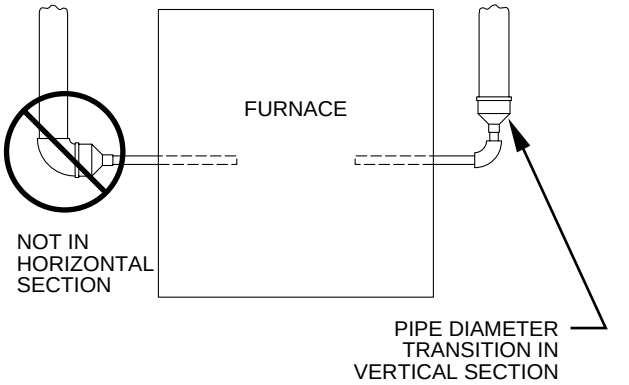

Fig. 33—Combustion-Air and Vent Pipe Diameter Transition Location and Elbow Configuration

Combustion-air and vent pipes must terminate together in same atmospheric pressure zone, either through roof or sidewall (roof termination preferred), using accessory termination kit. See Table 6 for required clearances.

Furnace combustion-air and vent pipe connections must be attached as shown in Fig. 34. Combustion-air intake plug fitting and inducer housing alternate vent cap may need to be relocated in some applications.

NOTE: Slope combustion-air and vent pipes downward toward furnace a minimum of 1/4 in. per linear ft with no sags between hangers.

⚠ CAUTION

When combustion-air pipe is installed above a suspended ceiling, pipe must be insulated with 3/8-in. thick Armaflex-type insulation. Combustion-air pipe should also be insulated when it passes through warm, humid space.

⚠ CAUTION

When vent pipe is exposed to temperatures below freezing, such as when it passes through an unheated space or when a chimney is used as a raceway, pipe must be insulated as shown in Table 8 with Armaflex-type insulation.

⚠ CAUTION

Combustion air must not be taken from inside structure because inside air is frequently contaminated by halogens, which include fluorides, chlorides, bromides, and iodides. These elements are found in aerosols, detergents, bleaches, cleaning solvents, salts, air fresheners, adhesives, paint, and other household products. Locate combustion-air inlet as far as possible from swimming pool and swimming pool pump house. Excessive exposure to contaminated combustion air will result in safety and performance related problems.

⚠ WARNING

Solvent cements are combustible. Keep away from heat, sparks, and open flame. Use only in well ventilated areas. Avoid breathing in vapor or allowing contact with skin or eyes. Failure to follow this warning could result in fire, property damage, personal injury, or death.

TABLE 5—APPROVED COMBUSTION-AIR AND VENT PIPE, FITTING AND CEMENT MATERIALS

ASTM SPECIFICATION (MARKED ON MATERIAL)	MATERIAL	PIPE	FITTINGS	SOLVENT CEMENT AND PRIMERS	DESCRIPTION
D1527	ABS	Pipe	—	—	Schedule-40
D1785	PVC	Pipe	—	—	Schedule-40
D2235	For ABS	—	—	Solvent Cement	For ABS
D2241	PVC	Pipe	—	—	SDR-21 & SDR-26
D2466	PVC	—	Fittings	—	Schedule-40
D2468	ABS	—	Fittings	—	Schedule-40
D2564	For PVC	—	—	Solvent Cement	For PVC
D2661	ABS	Pipe	Fittings	—	DWV at Schedule-40 IPS sizes
D2665	PVC	Pipe	Fittings	—	DWV
F438	CPVC	—	Fittings	—	Schedule-40
F441	CPVC	Pipe	—	—	Schedule-40
F442	CPVC	Pipe	—	—	SDR
F493	For CPVC	—	—	Solvent Cement	For CPVC
F628	ABS	Pipe	—	—	Cellular Core DWV at Schedule-40 IPS sizes
F656	For PVC	—	—	Primer	For PVC
F891	PVC	Pipe	—	—	Cellular Core Schedule-40 & DWV

TABLE 6—COMBUSTION-AIR AND VENT PIPE TERMINATION CLEARANCES

LOCATION	CLEARANCE (FT)	
	U.S.A.	Canada
Above grade level or above anticipated snow depth	1	1†
Dryer/Water Heater vent	See Note 5	See Note 5
From plumbing vent stack	3	3
From any mechanical fresh air intake	See Note 4	6
For furnaces with an input capacity of 100,000 Btuh or less—from any non-mechanical air supply (windows or doors which can be opened) or combustion-air opening	1	1
For furnaces with an input capacity greater than 100,000 Btuh or less—from any non-mechanical air supply (windows or doors which can be opened) or combustion-air opening	1	3
From service regulator vent, electric and gas meters and relief equipment	3*	See Note 6
Above grade when adjacent to public walkway	See Note 3	See Note 3

* Horizontal distance.

† 18 in. above roof surface in Canada.

NOTES:
1. If installing 2 adjacent 58MTA Furnaces, refer to Multiventing and Vent Terminations section for proper vent configurations.
2. When locating combustion-air and vent terminations, consideration must be given to prevailing winds, location, and other conditions which may cause recirculation of the appliance's own flue products or the flue products of adjacent vents. Recirculation can cause poor combustion, inlet condensate problems, and accelerated corrosion of heat exchangers.
3. Vent termination can not terminate less than 2 ft horizontal and 7 ft above public walkway or where condensate vapor or droplets may be a hazard.
4. Vent termination must be at least 3 feet above any forced draft inlets within 10 feet horizontal. Vent termination must be at least 3 feet horizontal from other direct vent appliances intake unless otherwise specified by manufacturer.
5. 3 ft radius of furnace air-intake terminal and 1 ft horizontally from vertical centerline of furnace air-intake terminal.
6. Above a meter/regulator within 3 feet horizontally of vertical centerline of meter/regulator vent outlet to a maximum vertacal distance of 15 feet.

⚠ WARNING

All combustion-air and vent pipes must be airtight and watertight. Pipes must also terminate exactly as shown in Fig. 37, 38, 39, 40, or 41. Failure to follow this warning could result in property damage, personal injury, or death.

NOTE: The minimum combustion-air and vent pipe length (each) for these furnaces is 5 ft. Short pipe lengths (5-8 ft) may discharge water droplets. These droplets may be undesirable, and a 12-in. minimum offset pipe section is recommended, as shown in Fig. 35, to reduce excessive droplets from exiting vent pipe outlet.

Combustion-Air and Vent Pipe Diameter

Determine combustion-air and vent pipe diameter.

1. Using Table 7, individually determine the smallest combustion-air and vent pipe diameters allowed for each pipe. Pick the larger of these 2 pipe diameters and use this diameter for both combustion-air and vent pipes.
2. When installing vent systems of short pipe length, use the smallest allowable pipe diameter. Do not use pipe size greater than required or incomplete combustion, flame disturbance, or flame sense lockout may occur.

NOTE: Do not count elbows or pipe sections in terminations or within furnace. See shaded areas in Fig. 37, 38, 39, 40, and 41.

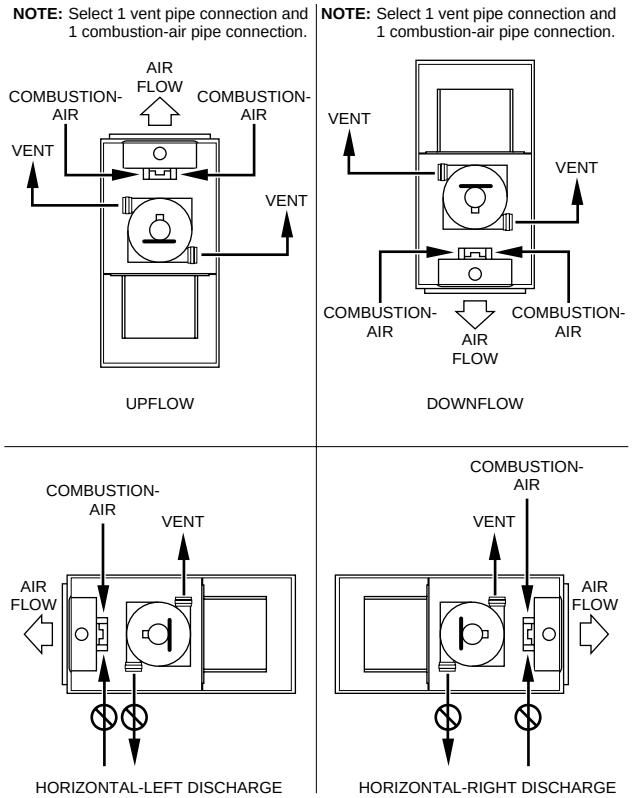

A96187

Fig. 34—Combustion-Air and Vent Pipe Connections

EXAMPLE: An 080-12 size furnace located in Indianapolis, elevation 650 ft above sea level, could be installed in an application requiring 3 elbows and 32 ft of vent pipe, along with 5 elbows and 34 ft of combustion-air pipe. Table 7 indicates this application would allow a 2-in. diameter vent pipe, but require a 2-1/2 in. diameter combustion air pipe (2-in. pipe is good for 35 ft with 3 elbows, but only 30 ft with 5 elbows). Therefore, 2-1/2 in. diameter pipe must be used for both vent and combustion-air pipes since larger required diameter must always be used for both pipes. If same installation were in Albuquerque, elevation 5250 ft above sea level, installation would require 2-1/2 in. vent pipe and combustion-air pipe. At 5001- to 6000-ft elevation, 2-in. pipe is only good for 17 ft with 5 elbows, and 2-1/2 in. pipe is good for 70 ft with 5 elbows.

Combustion-Air and Vent Pipe Attachment

NOTE: All pipe joints must be cemented except attachment of combustion-air pipe to inlet housing connection, since it may be necessary to remove pipe for servicing.

1. Attach combustion-air pipe to furnace as follows:
   a. Determine location of combustion-air intake pipe connection to combustion-air intake housing as shown in Fig. 34 for application.
   b. Reposition combustion-air intake housing plug fitting in appropriate unused intake housing connection.
   c. If required (see Table 7), insert perforated disk assembly (factory-supplied in loose parts bag) in intake housing where combustion-air intake pipe will be connected. If half disk set is required, install with shoulder of disk against stop in combustion-air inlet.
   d. Install pipe support (factory-supplied in loose parts bag) into selected furnace casing combustion-air pipe hole. Pipe support should be positioned at bottom of casing hole.
   e. Insert 2-in. diameter pipe into intake housing.

NOTE: A 2-in. diameter pipe must be used within the furnace casing. Make all pipe diameter transitions outside furnace casing.

   f. Install casing hole filler plug (factory-supplied in loose parts bag) in unused combustion-air pipe casing hole.
   g. Drill a 1/8-in. hole in 2-in. combustion-air pipe using hole in intake housing as a guide.
   h. Install a field-supplied No. 6 or No. 8 sheet metal screw into combustion-air pipe.

NOTE: DO NOT OVERTIGHTEN SCREW. Breakage to intake housing or fitting may cause air leakage to occur.

NOTE: Do not attach combustion-air intake pipe permanently to combustion-air intake housing since it may be necessary to remove pipe for service of ignitor or flame sensor.

Combustion-Air Intake Housing Plug Fitting: The combustion-air intake plug fitting must be installed in unused combustion-air intake housing. This fitting must be attached by using RTV sealant, or by drilling a 1/8-in. hole in fitting, using hole in intake housing as a guide. Install a field-supplied No. 6 or No. 8 sheet metal screw.

A plugged drain connection has been provided on this fitting for use when moisture is found in combustion-air intake pipe and combustion box.

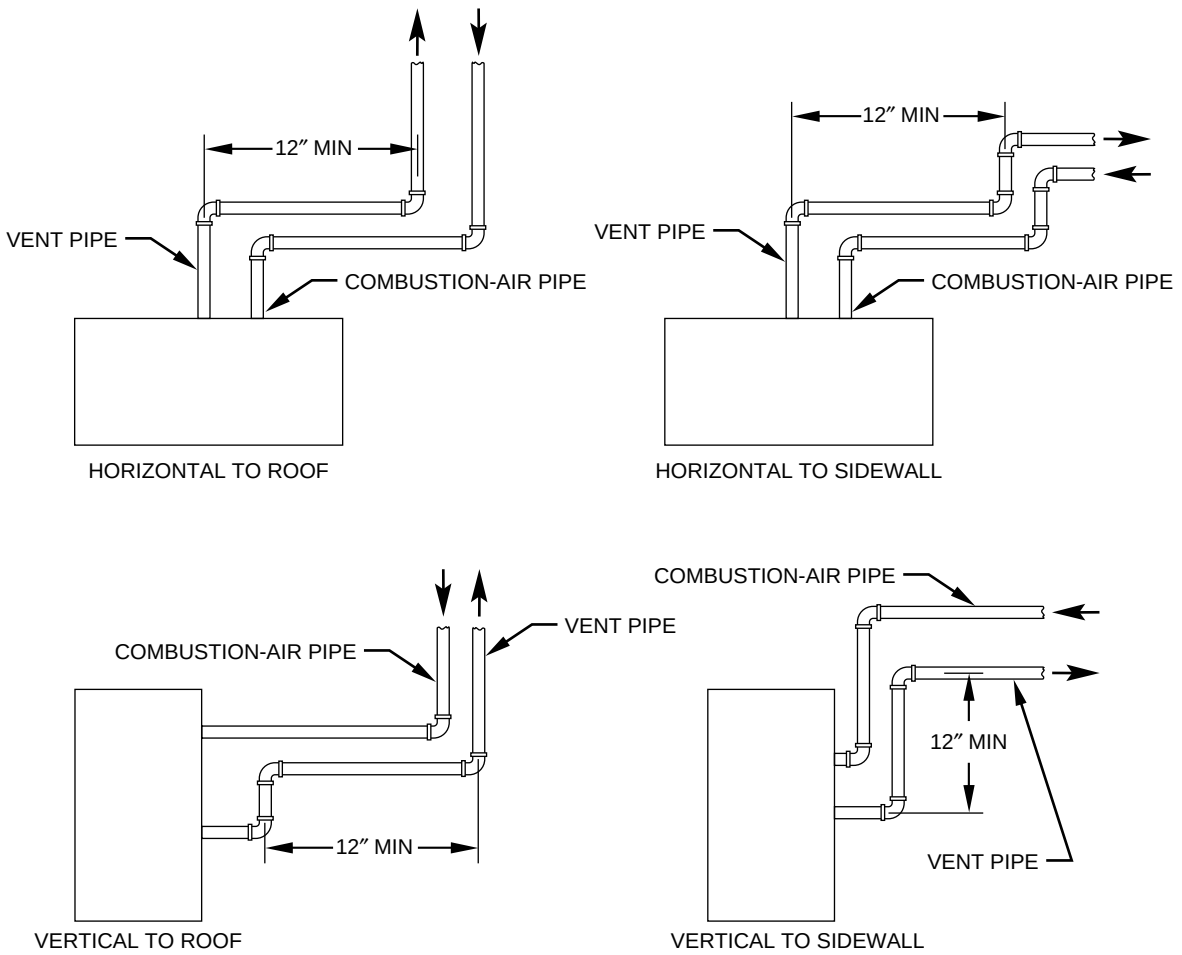

NOTE: A 12 In. minimum offset pipe section is recommended with short (5 to 8 ft) vent systems. This recommendation is to reduce excessive condensate droplets from exiting the vent pipe.

A96230

Fig. 35—Short Vent (5 to 8 ft) System

NOTE: Moisture in combustion-air intake may be result of improper termination. Ensure combustion-air intake pipe termination is similar to that shown in Fig. 37, 38, 39, 40, and 41 so it will not be susceptible to areas where light snow or other sources of moisture could be pulled in.

If use of this drain connection is desired, drill out fitting's tap plug with a 3/16-in. drill and connect a field-supplied 3/8-in. tube. This tube should be routed to open condensate drain for furnace and A/C (if used), and should be trapped. (See Fig. 36.)

2. Attach vent pipe to furnace as follows:
   a. Determine location of vent pipe connection to inducer housing as shown in Fig. 34 for application.
   b. Reposition elastomeric (rubber) inducer housing outlet cap and clamp to appropriate unused inducer housing connection. Tighten clamp.

⚠ WARNING

Inducer housing outlet cap must be installed and fully seated against inducer housing. Clamp must be tightened to prevent any condensate leakage. Failure to follow this warning could result in electrical shock, fire, personal injury, or death.

   c. Install pipe support (factory-supplied in loose parts bag) into selected furnace casing vent pipe hole. Pipe support should be positioned at bottom of casing hole.

⚠ WARNING

Vent pipe must be installed and fully seated against inducer housing internal stop. Clamp must be tightened to prevent any condensate leakage. Failure to follow this warning could result in electrical shock, fire, personal injury, or death.

   d. Be certain that mating surfaces of inducer housing connection, elastomeric coupling, and 2-in. diameter vent pipe are clean and dry. Assemble the elastomeric (rubber) vent coupling (with 2 loose clamps) onto inducer housing connection. Insert the 2-in. diameter vent pipe through the elastomeric (rubber) coupling and fully into inducer housing connection until it bottoms on the internal stop. Tighten both clamps to secure the pipe to inducer housing. Tighten the clamp screws to 15 in.-lb. of torque.
   e. Install casing hole filler plug (factory-supplied in loose parts bag) in unused combustion-air pipe casing hole.

NOTE: A 2-in. diameter pipe must be used within the furnace casing. Make all pipe diameter transitions outside furnace casing.

Vent Extension Pipe: Furnaces with 100,000 Btuh and larger inputs are supplied with a PVC vent extension pipe (2-in. diameter by 12-in. long). This pipe has a built-in channel to assist vent condensate disposal. When this vent extension pipe is supplied, it must be used to connect the field vent pipe to furnace inducer housing on ALL upflow and downflow applications.

TABLE 7—MAXIMUM ALLOWABLE PIPE LENGTH (FT)

ALTITUDE (FT)	UNIT SIZE	TERMINATION TYPE	PIPE DIA (IN.)*	NUMBER OF 90° ELBOWS					
				1	2	3	4	5	6
0 to 2000	060–12	2 Pipe or 2-in Concentric	1-1/2	20	15	10	5	NA	NA
			2	70	70	70	70	70	70
	080–12 080–16	2 Pipe or 2-in Concentric	1-1/2	10	NA	NA	NA	NA	NA
			2	55	50	35	30	30	20
			2-1/2	70	70	70	70	70	70
	100–20 100-20	2 Pipe or 3-in Concentric	2	5	NA	NA	NA	NA	NA
			2-1/2	40	30	20	20	10	NA
			3	70	70	70	70	70	70
	120-20	2 Pipe or 3-in. Concentric	2-1/2 one disk	10	NA	NA	NA	NA	NA
			3†	45	40	35	30	25	20
			3† no disk	70	70	70	70	70	70
ALTITUDE (FT)	UNIT SIZE	TERMINATION TYPE	PIPE DIA (IN.)*	NUMBER OF 90° ELBOWS					
				1	2	3	4	5	6
2001 to 3000	060-12	2 Pipe or 2-in Concentric	1–1/2	17	12	7	NA	NA	NA
			2	70	67	66	61	61	61
	080-12 080-16	2 Pipe or 2-in Concentric	2	49	44	30	25	25	15
			2-1/2	70	70	70	70	70	70
	100-16 100-20	2 Pipe or 3-in Concentric	2-1/2	35	26	16	16	6	NA
			3	70	70	70	70	66	61
	120-20	2 Pipe or 3-in. Concentric	3	14	9	NA	NA	NA	NA
			3† no disk	70	70	63	56	50	43
			4† no disk	70	70	70	70	70	70
ALTITUDE (FT)	UNIT SIZE	TERMINATION TYPE	PIPE DIA (IN.)*	NUMBER OF 90° ELBOWS					
				1	2	3	4	5	6
3001 to 4000	060-12	2 Pipe or 2-in Concentric	1-1/2	16	11	6	NA	NA	NA
			2	68	63	62	57	57	56
	080-12 080-16	2 Pipe or 2-in Concentric	2	46	41	28	23	22	13
			2-1/2	70	70	70	70	70	70
	100-16 100-20	2 Pipe or 3-in Concentric	2-1/2	33	24	15	14	5	NA
			3	70	70	70	66	61	56
	120-20	2 Pipe or 3-in. Concentric	3† no disk	65	58	51	44	38	31
			4† no disk	70	70	70	70	70	70

See notes at end of table.

NOTE: See label on vent extension pipe for proper installation. This pipe may be shortened if an elbow is used to connect vent extension tube to field installed vent pipe.

3. Working from furnace to outside, cut pipe to required length(s).
4. Deburr inside and outside of pipe.
5. Chamfer outside edge of pipe for better distribution of primer and cement.
6. Clean and dry all surfaces to be joined.
7. Check dry fit of pipe and mark insertion depth on pipe.

NOTE: It is recommended that all pipes be cut, prepared, and preassembled before permanently cementing any joint.

8. After pipes have been cut and preassembled, apply generous layer of cement primer to pipe fitting socket and end of pipe to insertion mark. Quickly apply approved cement to end of pipe and fitting socket (over primer). Apply cement in a light, uniform coat on inside of socket to prevent buildup of excess cement. Apply second coat.
9. While cement is still wet, twist pipe into socket with 1/4 turn. Be sure pipe is fully inserted into fitting socket.
10. Wipe excess cement from joint. A continuous bead of cement will be visible around perimeter of a properly made joint.
11. Handle pipe joints carefully until cement sets.
12. Support combustion-air and vent piping a minimum of every 5 ft (3 ft for SDR-21 or -26 PVC) using perforated metal hanging strap.
13. Slope combustion-air and vent pipes downward toward furnace a minimum of 1/4 in. per linear ft with no sags between hangers.
14. Use appropriate methods to seal openings where vent and combustion-air pipes pass through roof or side wall.

CONCENTRIC VENT AND COMBUSTION-AIR TERMINATION KIT INSTALLATION

NOTE: If these instructions differ from those packaged with termination kit, follow kit instructions.

Combustion-air and vent pipes must terminate outside structure. A factory accessory termination kit must be installed in 1 of the installations shown in Fig. 37, 38, 39, 40, and 41. Four termination kits are available.

1. The 2-in. termination bracket kit is for 1-in., 1-1/2 in., and 2-in. diameter 2-pipe termination systems.
2. The 3-in. termination bracket kit is for 2-1/2 in., 3-in., and 4-in. diameter 2-pipe termination systems.
3. The 2-in. concentric vent/air termination kit is for 1-in., 1-1/2 in., 2-in., and 2-1/2 in. diameter pipe systems when single penetration of wall or roof is desired.

TABLE 7—MAXIMUM ALLOWABLE PIPE LENGTH (FT) (Continued)

ALTITUDE (FT)	UNIT SIZE	TERMINATION TYPE	PIPE DIA (IN.)*	NUMBER OF 90° ELBOWS					
				1	2	3	4	5	6
4001 to 5000‡	060-12	2 Pipe or 2-in Concentric	1-1/2	15	10	5	NA	NA	NA
			2	64	59	58	53	52	52
	080-12 080-16	2 Pipe or 2-in Concentric	2	44	39	26	21	20	11
			2-1/2	70	70	70	70	70	70
	100-16 100-20	2 Pipe or 3-in Concentric	2-1/2	31	22	13	12	NA	NA
			3	70	70	67	62	57	52
	120-20	2 Pipe or 3-in. Concentric	3† no disk	53	46	40	33	26	20
			4† no disk	70	70	70	70	70	70
ALTITUDE (FT)	UNIT SIZE	TERMINATION TYPE	PIPE DIA (IN.)*	NUMBER OF 90° ELBOWS					
				1	2	3	4	5	6
5001 to 6000‡	060-12	2 Pipe or 2-in Concentric	1-1/2	14	9	NA	NA	NA	NA
			2	60	55	54	49	48	47
	080-12 080-16	2 Pipe or 2-in Concentric	2	41	36	23	18	17	8
			2-1/2	70	70	70	70	70	70
	100-16 100-20	2 Pipe or 3-in Concentric	2-1/2	29	21	12	11	NA	NA
			3	70	67	62	57	52	47
	120-20	2 Pipe or 3-in. Concentric	3† no disk	42	35	29	22	15	9
			4† no disk	70	70	70	70	70	70
ALTITUDE (FT)	UNIT SIZE	TERMINATION TYPE	PIPE DIA (IN.)*	NUMBER OF 90° ELBOWS					
				1	2	3	4	5	6
6001 to 7000‡	060-12	2 Pipe or 2-in Concentric	1-1/2	13	8	NA	NA	NA	NA
			2	57	52	50	45	44	43
	080-12 080-16	2 Pipe or 2-in Concentric	2	38	33	21	16	15	6
			2-1/2	70	70	68	67	66	64
	100-16 100-20	2 Pipe or 3-in Concentric	2-1/2	27	19	10	9	NA	NA
			3	68	63	58	53	48	43
	120-20	2 Pipe or 3-in. Concentric	3† no disk	31	24	18	11	NA	NA
			4† no disk	70	70	70	70	67	62
ALTITUDE (FT)	UNIT SIZE	TERMINATION TYPE	PIPE DIA (IN.)*	NUMBER OF 90° ELBOWS					
				1	2	3	4	5	6
7001 to 8000‡	060-12	2 Pipe or 2-in Concentric	1-1/2	12	7	NA	NA	NA	NA
			2	53	48	46	41	40	38
	080-12 080-16	2 Pipe or 2-in Concentric	2	36	31	19	14	12	NA
			2-1/2	66	65	63	62	60	59
	100-16 100-20	2 Pipe or 3-in Concentric	2-1/2	25	17	8	7	NA	NA
			3	63	58	53	48	43	38
	120-20	2 Pipe or 3-in. Concentric	3† no disk	20	13	7	NA	NA	NA
			4† no disk	61	56	51	46	41	36

See notes at end of table.

4. The 3-in. concentric vent/air termination kit is for 2-1/2 in., 3-in., and 4-in. diameter pipe systems when single penetration of wall or roof is desired.

NOTE: Shaded parts in Fig. 37, 38, 39, 40, and 41 are considered to be termination. These components should NOT be counted when determining pipe diameter. Roof termination is preferred since it is less susceptible to damage, has reduced chances to take in contaminants, and has less visible vent vapors. (See Fig. 37 or 38.) Sidewall termination may require sealing or shielding of building surfaces with a corrosive resistance material due to corrosive combustion products of vent system.

Extended Exposed Sidewall Pipes

Sidewall combustion-air and vent pipe terminations may be extended beyond area shown in Fig. 40 or 41 in outside ambient by insulating pipes as indicated in Table 8.

1. Determine combustion-air and vent pipe diameters, as stated above, using total pipe length and number of elbows.
2. Using winter design temperature (used in load calculations), find appropriate temperature for your application and furnace model.

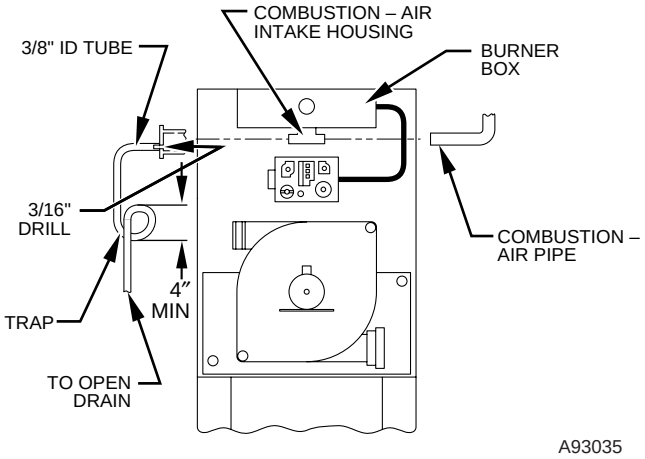

Fig. 36—Air Intake Housing Plug Fitting Drain

TABLE 7—MAXIMUM ALLOWABLE PIPE LENGTH (FT) (Continued)

ALTITUDE (FT)	UNIT SIZE	TERMINATION TYPE	PIPE DIA (IN.)*	NUMBER OF 90° ELBOWS					
				1	2	3	4	5	6
8001 to 9000‡	060-12	2 Pipe or 2-in Concentric	1-1/2	11	6	NA	NA	NA	NA
			2	49	44	42	37	35	34
	080-12 080-16	2 Pipe or 2-in Concentric	2	33	28	17	12	10	NA
			2-1/2	62	60	58	56	55	53
	100-16 100-20	2 Pipe or 3-in Concentric	2-1/2	23	15	7	5	NA	NA
			3	59	54	49	44	39	34
	120-20	2 Pipe or 3-in. Concentric	3† no disk	10	NA	NA	NA	NA	NA
			4† no disk	35	30	25	20	15	10
ALTITUDE (FT)	UNIT SIZE	TERMINATION TYPE	PIPE DIA (IN.)*	NUMBER OF 90° ELBOWS					
				1	2	3	4	5	6
9001 to 10,000‡	060-12	2 Pipe or 2-in Concentric	2	45	40	38	33	31	29
	080-12 080-16	2 Pipe or 2-in Concentric	2	30	25	14	9	7	NA
			2-1/2	57	55	53	51	49	47
	100-16 100-20	2 Pipe or 3-in Concentric	2-1/2	21	13	5	NA	NA	NA
			3	54	49	44	39	34	29
	120-20	2 Pipe or 3-in. Concentric	4† no disk	10	5	NA	NA	NA	NA

* Disk usage-Unless otherwise specified, use perforated disk assembly (factory-supplied in loose parts bag). If one disk is stated, separate 2 halves of perforated disk assembly and use shouldered disk half. When using shouldered disk half, install screen side toward inlet box.
† Wide radius elbow.
‡ Vent sizing for Canadian installations over 4500 ft (1370 m) above sea level are subject to acceptance by the local authorities having jurisdiction.
NA-Not Allowed; pressure switch will not make.

NOTES:
1. Do not use pipe size greater than those specified in table or incomplete combustion, flame disturbance, or flame sense lockout may occur.
2. Size both the combustion-air and vent pipe independently, determine the smallest diameter allowed by the chart for each pipe, then use the larger of these two diameters for both pipes.
3. Assume two 45° elbows equal one 90° elbow. Long radius elbows are desirable and may be required in some cases.
4. Elbows and pipe sections within the furnace casing and at the vent termination should not be included in vent length or elbow count.
5. The minimum pipe length is 5 ft for all applications.
6. Use 3-in. diameter vent termination kit for installations requiring 4-in diameter pipe.

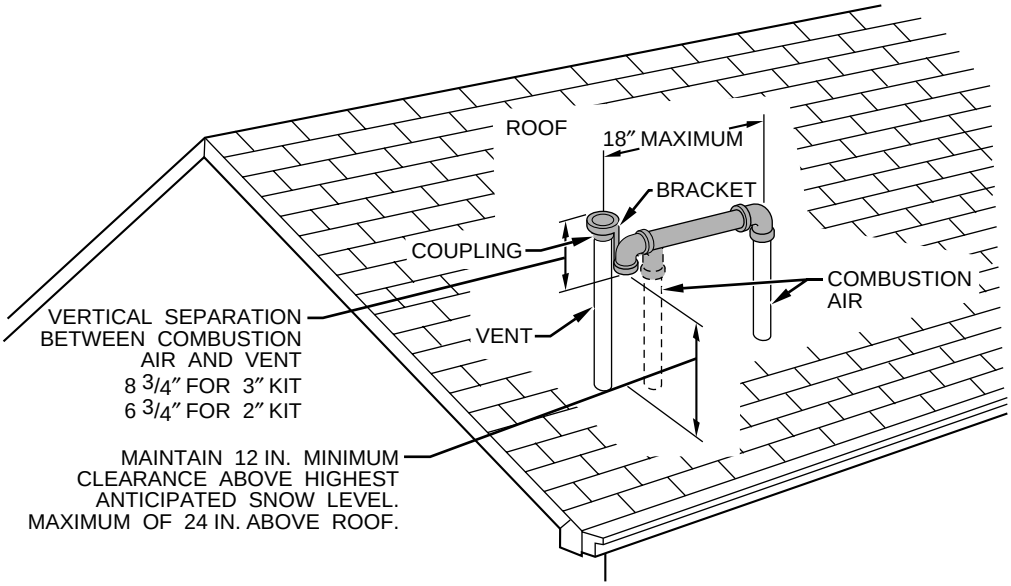

Fig. 37—Roof Termination (Preferred)

3. Determine required insulation thickness for exposed pipe lengths.

NOTE: Pipe length(ft) specified for maximum pipe lengths located in unconditioned spaces. Pipes located in unconditioned space cannot exceed total allowable pipe length as specified in Table 7.

Two-Pipe Termination Kit

1. Determine location for termination. Consider the following when determining an appropriate location for termination kit.
   a. Comply with all clearance requirements as stated in Table 6.
   b. Termination kit should be positioned where vent vapors will not damage plants/shrubs or air conditioning equipment.
   c. Termination kit should be positioned so that it will not be affected by wind eddy (such as inside building corners) or allow recirculation of flue gases, airborne leaves, or light snow.

TABLE 8—MAXIMUM ALLOWABLE EXPOSED VENT PIPE LENGTH (FT) WITH AND WITHOUT INSULATION IN WINTER DESIGN TEMPERATURE AMBIENT*

UNIT SIZE	WINTER DESIGN TEMPERATURE (°F)	MAX PIPE DIAMETER (IN.)	WITHOUT INSULATION	WITH 3/8–IN. OR THICKER INSULATION†
060	20	2	44	70
	0	2	21	70
	-20	2	20	57
080	20	2	55	55
	0	2	30	55
	-20	2	16	55
	20	2.5	58	70
	0	2.5	29	70
	-20	2.5	14	67
100	20	2.5	40	40
	0	2.5	38	40
	-20	2.5	21	40
	20	3	63	70
	0	3	30	70
	-20	3	12	70
120	20	3	70	70
	0	3	38	70
	-20	3	19	70
	20	4	65	70
	0	4	26	70
	-20	4	5	65

* Pipe length (ft) specified for maximum pipe lengths located in unconditioned spaces. Pipes located in unconditioned space cannot exceed total allowable pipe length as specified in Table 7.
† Insulation thickness based on R value of 3.5 per in.

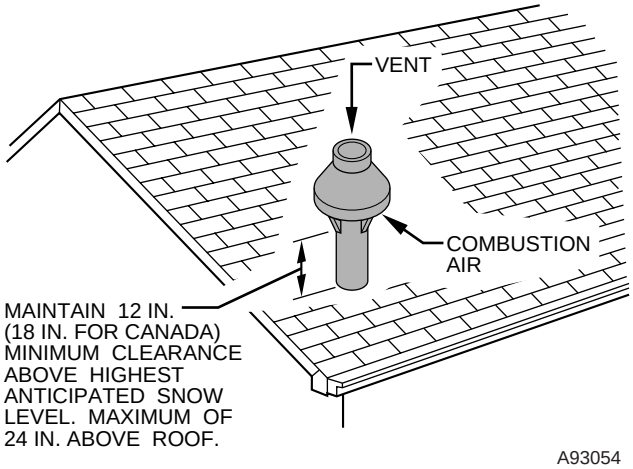

Fig. 38—Concentric Vent and Combustion-Air Roof Termination (Preferred)

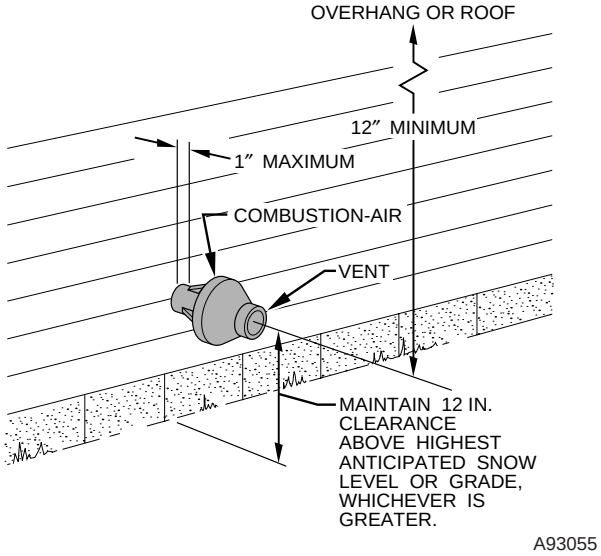

Fig. 39—Concentric Vent and Combustion-Air Side Termination

d. Termination kit should be positioned where it will not be damaged by or subjected to foreign objects, such as stones, balls, etc.

e. Termination kit should be positioned where vent vapors are not objectionable.

2. Cut 2 holes, 1 for each pipe, of appropriate size for pipe size being used.

3. Loosely install elbow in bracket and place assembly on combustion-air pipe.

Roof terminations-Loosely install pipe coupling on properly cut vent pipe. Coupling must be positioned so bracket will mount as shown in Fig. 37.

For applications using combustion-air pipe option, indicated by dashed lines in Fig. 37, install 90° street elbow into 90° elbow, making U-fitting. A 180° U-fitting may be used.

Sidewall terminations-Install bracket as shown in Fig. 40 or 41.

For applications using vent pipe option indicated by dashed lines in Fig. 40, rotate vent elbow 90° from position shown in Fig. 40.

4. Disassemble loose pipe fittings. Clean and cement using same procedures as used for system piping.

5. Check required dimensions as shown in Fig. 37, 40, or 41.

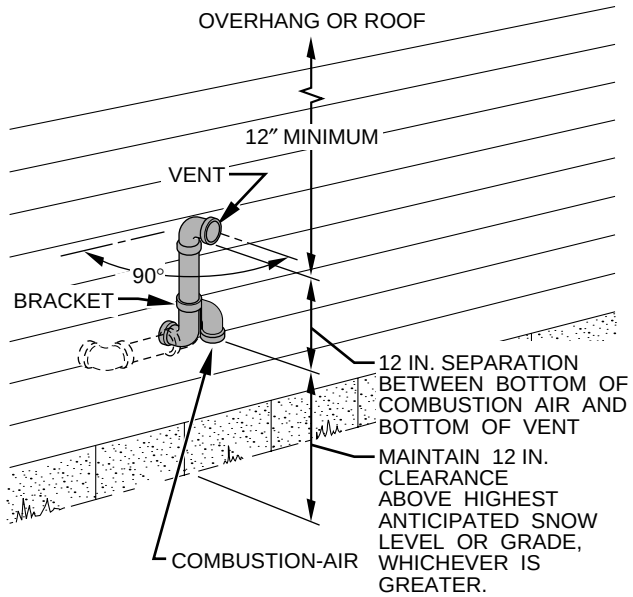

Fig. 40—Sidewall Termination of 12 in. or More

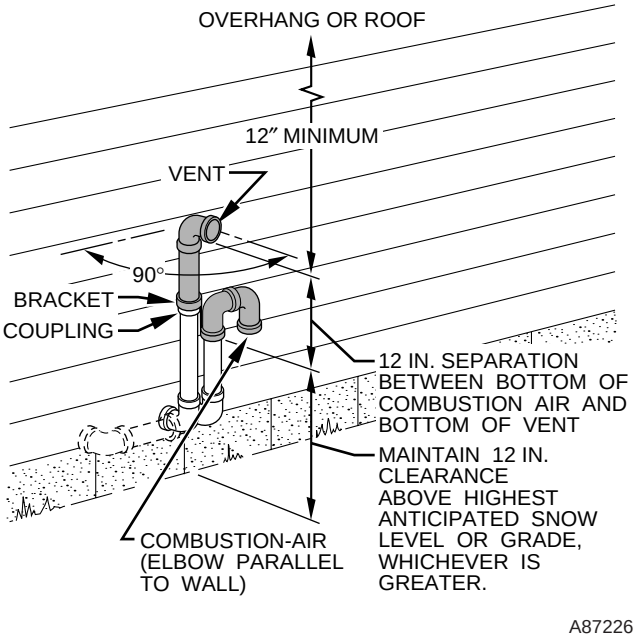

Fig. 41—Raised Sidewall Termination when Wall Penetration is Less than 12 in. Above Snow or Grade

Concentric Vent/Air Termination Kit

1. Determine location for termination. Consideration of the following should be made when determining an appropriate location for termination kit.
   a. Comply with all clearance requirements as stated in Table 6.
   b. Termination kit should be positioned where vent vapors will not damage plants/shrubs or air conditioning equipment.
   c. Termination kit should be positioned so it will not be affected by wind eddy (such as inside building comers) or that may allow recirculation of flue gases, airborne leaves, or light snow.

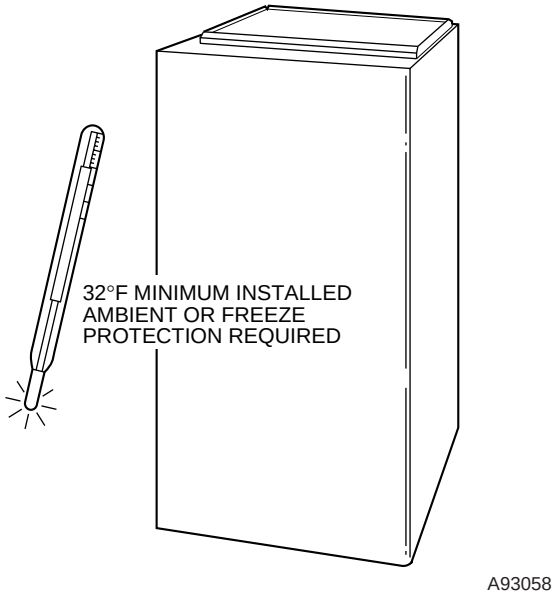

Fig. 42—Freeze Protection

   d. Termination kit should be positioned where it will not be damaged by or subjected to foreign objects, such as stones, balls, etc.
   e. Termination kit should be positioned where vent vapors are not objectionable.
2. Cut one 4-in. diameter hole for 2-in. kit, or one 5-in. diameter hole for 3-in. kit.
3. Loosely assemble concentric vent/air termination components together using instructions in kit.
4. Slide assembled kit with rain shield REMOVED through hole.

   Roof terminations-Locate assembly through roof to appropriate height as shown in Fig. 38.

   Sidewall terminations-Locate assembly through sidewall with rain shield positioned no more than 1-in. from wall as shown in Fig. 39.

NOTE: Do not allow insulation or other materials to accumulate inside of pipe assembly when installing it through hole.

5. Disassemble loose pipe fittings. Clean and cement using same procedures as used for system piping.
6. Check required dimensions as shown in Fig. 38 or 39.

MULTIVENTING AND VENT TERMINATIONS

When 2 or more 58MTA furnaces are vented near each other, each furnace must be individually vented. NEVER common vent or breach vent 58MTA furnaces. When 2 or more 58MTA furnaces are vented near each other, 2 vent terminations may be installed as shown in Fig. 43, 44, 45, 46, or 47, but the next vent termination must be at least 36 in. away from first 2 terminations. It is important that vent terminations be made as shown to avoid recirculation of flue gases. Dimension A in Fig. 43, 44, 45, 46, and 47 represents distance between pipes or rain shields, as touching or 2-in. maximum separation.

Step 10—Condensate Drain

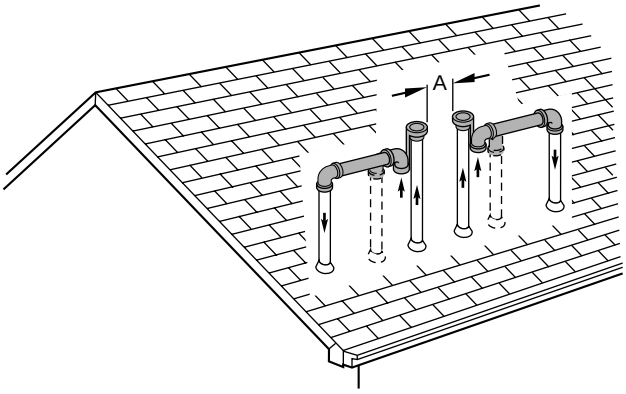

A96128

Fig. 43—Rooftop Termination (Dimension "A" is Touching or 2–in. Maximum Separation)

⚠ CAUTION

Unit must not be installed, operated, and then turned off and left in an unoccupied structure during cold weather when temperature drops to 32°F and below unless drain trap and drain line have adequate freeze protection. See Service and Maintenance Instructions for winterizing procedure.

GENERAL

Condensate trap is shipped installed in the blower shelf and factory connected for UPFLOW applications. Condensate trap must be RELOCATED for use in DOWNFLOW and HORIZONTAL applications.

Condensate trap MUST be used for all applications.

An external trap is not required when connecting the field drain to this condensate trap.

The field drain connection (condensate trap or drain tube coupling) is sized for l/2-in. CPVC, 1/2-in. PVC, or 5/8-in. ID tube connection.

Drain pipe and fittings must conform to ANSI standards and ASTM D1785, D2466 or D2846. CPVC or PVC cement must conform to ASTM D2564 or F493. Primer must conform to ASTM F656. In Canada, use CSA or ULC certified schedule 40 CPVC or PVC drain pipe, fittings, and cement.

When a condensate pump is required, select a pump which is approved for condensing furnace applications. To avoid condensate spillage, select a pump with an overflow switch.

Furnace condensate is mildly acidic, typically in the pH range of 3.2 to 4.5. Due to corrosive nature of this condensate, a condensate pH neutralizing filter may be desired. Check with local authorities to determine if a pH neutralizer is required.

APPLICATION

The furnace, A/C, and humidifier drains may be combined and drained together. The A/C drain must have an external, field-supplied trap prior to the furnace drain connection. All drain connections (furnace, A/C, or humidifier) must be terminated into an open or vented drain as close to the respective equipment as possible to prevent siphoning of the equipment's drain.

See Fig. 48 for example of possible field drain attachment using 1/2-in. CPVC or PVC tee for vent and A/C or humidifier drain connection.

Outdoor draining of the furnace is permissible if allowed by local codes. Caution should be taken when freezing ambient may freeze drain pipe and prohibit draining.

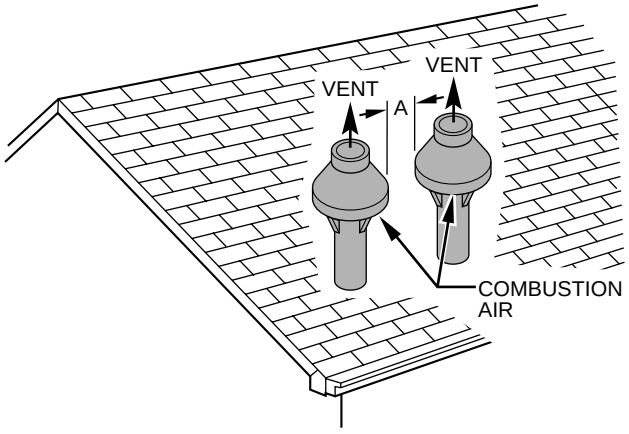

A93056

Fig. 44—Concentric Vent and Combustion-Air Roof Termination (Dimension "A" is Touching or 2-in. Maximum Separation)

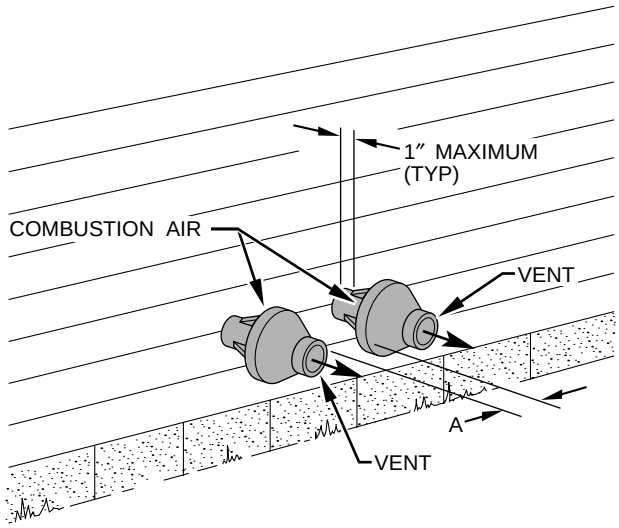

A93057

Fig. 45—Concentric Vent and Combustion-Air Side Termination (Dimension "A" is Touching or 2-in. Maximum Separation)

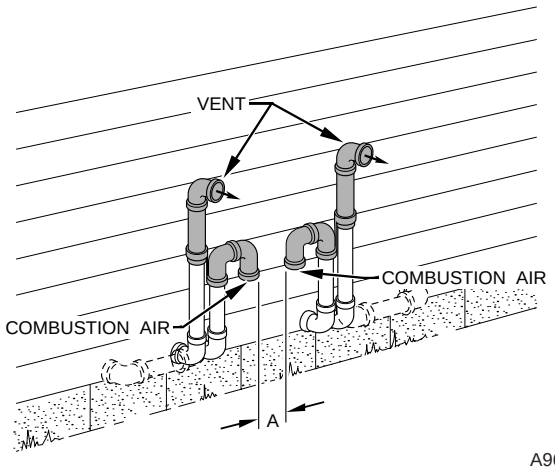

Fig. 46—Raised Sidewall Termination when Wall Penetration is 12 in. or Less Above Snow or Grade (Dimension "A" is Touching or 2-in. Maximum Separation)

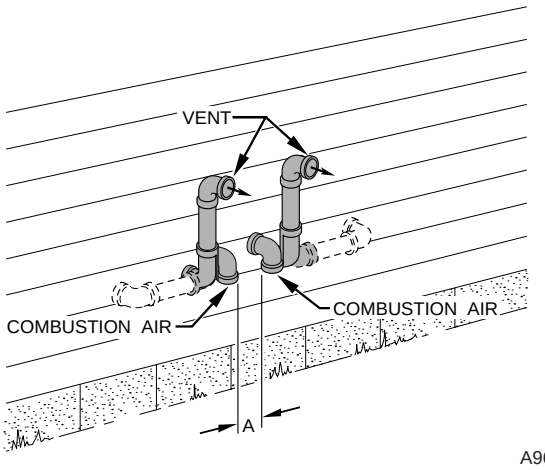

Fig. 47—Sidewall Termination of More than 12 in. (Dimension "A" is Touching or 2-in Maximum Separation)

⚠ WARNING

Caution should be taken to prevent draining where slippery conditions may cause personal injuries. Excessive condensate draining may cause saturated soil conditions which may result in damage to plants.

CONDENSATE DRAIN PROTECTION

Freezing condensate left in condensate trap and drain line may cause cracks, and possible water damage may occur. If freeze protection is required, use condensate freeze protection accessory or equivalent 3 to 6 watt per ft at 120-v and 40°F self-regulating, shielded, and waterproof heat tape. See Installation Instructions supplied with accessory or heat tape manufacturer's recommendations.

1. Fold heat tape in half and wrap on itself 3 times.
2. Locate heat tape between sides of condensate trap back. (See Fig. 49.)
3. Use wire ties to secure heat tape in place. Wire ties can be positioned in notches of condensate trap sides. (See Fig. 49.)
4. Wrap field drain pipe with remaining heat tape, approximately 1 wrap per ft.

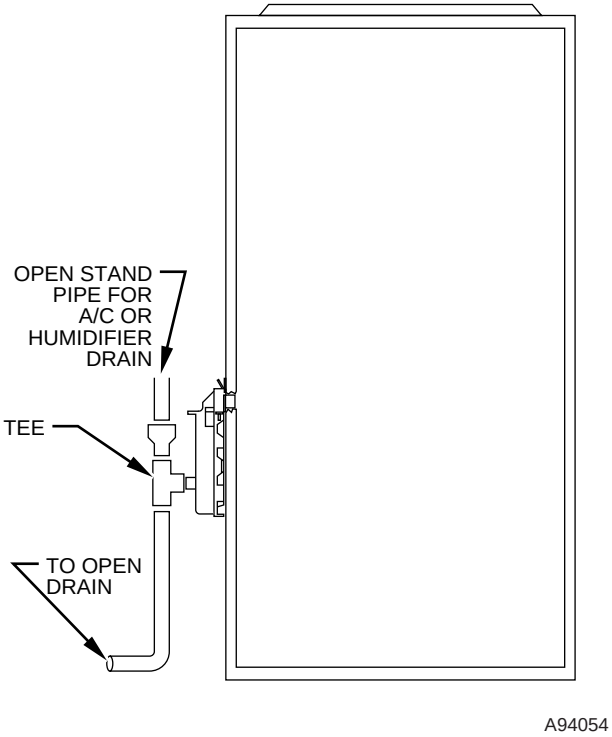

Fig. 48—Example of Field Drain Attachment

5. When using field-supplied heat tape, follow heat tape manufacturer's instructions for all other installation guidelines.

START-UP ADJUSTMENT AND SAFETY CHECK

⚠ CAUTION

Furnace control must be grounded for proper operation, or control will lock out. Control is grounded through green/yellow wire connected to gas valve C-terminal and burner box screw.

Step 1—General

The furnace must have a 115-v power supply properly connected and grounded.

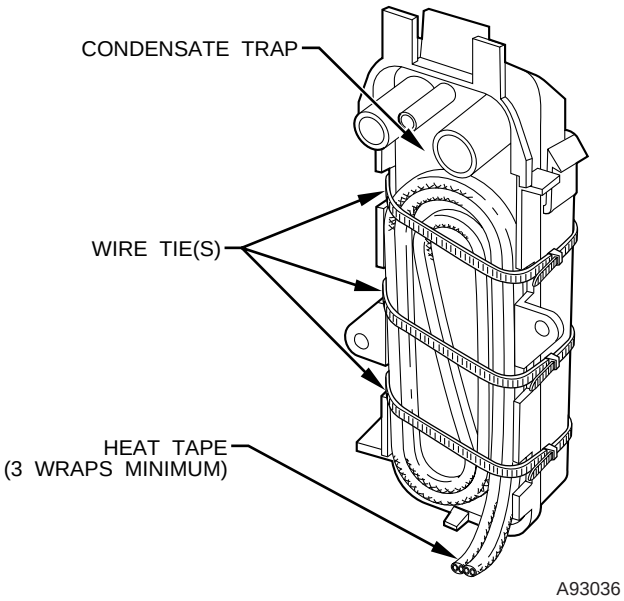

Fig. 49—Condensate Trap Heat Tape

NOTE: Proper polarity must be maintained for 115-v wiring. If polarity is incorrect, control status indicator light will flash rapidly and the furnace will not operate.

The gas service pressure must not exceed 0.5 psig (14-in. wc), and be no less than 0.16 psig (4.5-in. wc).

Thermostat wire connections at R and W/W1 are the minimum required for gas heating operation. W2 must be connected for 2-stage heating thermostats. COM, Y/Y2, and G are required for cooling, heat pumps, and some clock thermostats. These must be made at the 24-v terminal block on the control. (See Fig. 32.)

This furnace can be installed with either a single-stage heating or a 2-stage heating thermostat.

For single-stage thermostats, connect thermostat W to W/W1 at furnace control terminal block. (See Fig. 27 and 50H.) For single-stage thermostats, the control will determine, based on length of previous heating on and off cycles, when to operate in low- and high- gas heat for optimum comfort. Setup switch-1 (SW-1) must be in the factory-shipped OFF position. See Fig. 31 and Table 9A and B for setup switch information.

Table 9A—Furnace Setup Switch Description

SETUP SWITCH NO.	SWITCH NAME	NORMAL POSITION	DESCRIPTION OF USE
SW-1	Adaptive Heat Mode	OFF	Allows 2-stage operation with a single-stage thermostat when connected between R to W2. Turn on when using 2-stage thermostat to allow Low Heat operation when R to W/W1 closes and High Heat operation when R to W/W1 and W2 close.
SW-2	Blower OFF delay	ON or OFF	Control blower OFF delay time. Used in conjunction with SW-3. See Table 9B.
SW-3	Blower OFF delay	ON or OFF	Control blower OFF delay time. Used in conjunction with SW-2. See Table 9B.

Table 9B—Blower Off Delay Setup Switch (SW) 2–Stage Units with PSC Blower Motors

DESIRED HEATING MODE BLOWER-OFF DELAY (SEC)	SETUP SWITCH	
	SW-2	SW-3
90	OFF	OFF
120	OFF	ON
150	ON	OFF
180	ON	ON

If a 2-stage heating thermostat is to be used, move SW-1 to ON position at end of furnace installation. This overrides built-in control process for selecting high and low fire and allows the 2-stage thermostat to select gas heating modes. The W2 from thermostat must be connected to W2 on control terminal block. (See Fig. 28 and 50A-G.)

Before operating furnace, check each flame rollout manual reset switch for continuity. If necessary, press and release button to reset switch. The blower compartment door must be in place to complete the 115-v circuit to the furnace.

⚠ CAUTION

This furnace is equipped with a manual reset limit switch in the gas control area. The switch will open and shut off power to the gas valve if a flame rollout or overheating condition occurs in the gas control area. DO NOT bypass the switch. Correct inadequate combustion-air supply, component failure, or restricted flue gas passageway before resetting the switch.

→ Step 2—Sequence of Operation

Using schematic diagram in Fig. 31, follow the sequence of operation through the different modes. Read and follow diagram very carefully.

NOTE: If power interruption occurs during ″call for heat″ (W/W1 or W/W1 and W2), the control will run the blower for the selected blower off delay period after power is restored, if the thermostat is still calling for gas heating. The amber LED will flash code 12 during this period, after which the LED will be ON continuous as long as no faults are detected. After this period, the furnace will respond to the thermostat normally.

The blower door must be installed for power to be conducted through blower door interlock switch ILK to furnace control CPU, transformer TRAN, inducer motor IDM, blower motor BLWM, hot surface ignitor HSI, and gas valve GV.

TWO-STAGE HEATING WITH SINGLE-STAGE THERMOSTAT (ADAPTIVE MODE)

(See Fig. 27 for thermostat connections.)

NOTE: Low-heat-only switch, SW-1, selects either the low-heat-only operation mode when ON, or adaptive heating mode when OFF, in response to a call for heat. (See Fig. 32.)

This furnace can operate as a 2-stage furnace with a single-stage thermostat because furnace control CPU includes a programmed adaptive sequence of controlled operation, which selects low-gas-heat or high-gas-heat operation. This selection is based upon the stored history of the length of previous gas heating on/off periods of the single-stage thermostat.

The furnace will start up in either low- or high-gas heat. If the furnace starts up in low-gas heat, the control CPU determines the low-gas heat on time (from 0 to 16 minutes) which is permitted before switching to high-heat.

If power is interrupted, the stored history is erased. When this happens, the control CPU will initially select low-heat for up to 16 minutes and then switch to high-heat, as long as the thermostat continues to call for heat. Subsequent selection is based on stored history of thermostat cycle times.

When wall thermostat ″calls for heat″, R-W/W1 circuit closes. The furnace control performs a self check, verifies the low-heat and high-heat pressure switch contacts LPS and HPS are open, and starts inducer motor IDM in high speed.

1. **Inducer Prepurge Period**- If the furnace control CPU selects low-heat operation the inducer motor IDM comes up to speed, the low-heat pressure switch LPS closes, and the furnace control CPU begins a 15-second prepurge period. After the low-heat pressure switch re-closes the furnace control CPU will begin a 15-second prepurge period, and continue to run the inducer motor IDM at high-speed.
   If the furnace control CPU selects high-heat operation, the inducer motor IDM remains running at high-speed, and the high-heat pressure switch relay HPSR is de-energized to close the NC contact. When sufficient pressure is available the high-heat pressure switch HPS closes, and the high-heat gas valve solenoid GV-HI is energized. The furnace control CPU

begins a 15-second prepurge period after the low-heat pressure switch LPS closes. If the high-heat pressure switch HPS fails to close and the low-heat pressure switch LPS closes, the furnace will operate at low-heat gas flow rate until the high-heat pressure switch closes for a maximum of 2 minutes after ignition.

2. **Ignitor Warm-Up**-At end of the inducer prepurge period, the Hot Surface Ignitor HSI is energized for a 17-sec ignitor warm-up period.
3. **Trial-For-Ignition Sequence**-period is completed the main gas valve relay contacts GVR-1 and -2 close to energize the gas valve solenoid GV-M, the gas valve opens, and 24 vac power is supplied for a field-installed humidifier at the HUM terminal. The gas valve solenoid GV-M permits gas flow to the burners where it is ignited. After 5 seconds, the igniter HSI is de-energized and a 2-second Flame-Proving period begins. If the furnace control CPU selects high-heat operation, the high-heat gas valve solenoid GV-HI is also energized.
4. **Flame-Proving**-When burner flame is proved at the flame-proving sensor electrode FSE, the inducer motor IDM switches to low-speed unless running at high-speed, and the furnace control CPU begins the blower-ON delay period and continues to hold the gas valve GV-M open. If the burner flame is not proved within two seconds, the control CPU will close the gas valve GV-M, and the control CPU will repeat the ignition sequence for up to three more Trials-For-Ignition before going to Ignition-Lockout. **Lockout will be reset** automatically after three hours, by momentarily interrupting 115 vac power to the furnace, or by interrupting 24 vac power at SEC1 or SEC2 to the furnace control CPU (not at W/W1, G, R, etc.).
   If flame is proved when flame should not be present, the furnace control CPU will lock out of Gas-Heating mode and operate the inducer motor IDM on high speed until flame is no longer proved.
5. **Blower-On Delay**-If burner flame is proven the blower motor BLWM is energized 66 sec after gas valve GV-M is opened.
   Low-heat-The blower motor BLWM is energized at LO HEAT speed.
   Hi-heat-The BLWM is energized at HI HEAT speed.
   Simultaneously, the electronic air cleaner terminal EAC-1 is energized and remains energized as long as the blower motor BLWM is energized.
6. **Switching From Low- To High- Heat**- If the furnace control CPU switches from low-heat to high-heat, the furnace control CPU will switch the inducer motor IDM speed from low to high. The high-heat pressure switch relay HPSR is de-energized to close the NC contact. When sufficient pressure is available the high-heat pressure switch HPS closes, and the high-heat gas valve solenoid GV-HI is energized. The blower motor BLWM will switch to HI HEAT speed five seconds after the furnace control CPU switches from low-heat to high-heat.
7. **Switching From High- To Low- Heat**-The control CPU will not switch from high-heat to low-heat while the thermostat R-to-W circuit is closed when a single-stage thermostat is used.
8. **Blower-Off delay**- When the thermostat is satisfied, the R to W circuit is opened, de-energizing the gas valve GV-M, stopping gas flow to the burners, and de-energizing the humidifier terminal HUM. The inducer motor IDM will remain energized for a 15-second post-purge period. The blower motor BLWM and air cleaner terminal EAC-1 will remain energized for 90, 120, 150, or 180 seconds (depending on selection at blower-OFF delay switches). The furnace control CPU is factory-set for a 120-second blower-OFF delay.

TWO-STAGE HEATING WITH TWO-STAGE THERMOSTAT (NON-ADAPTIVE HEATING MODE)

(See Fig. 28 and 50A-G for thermostat connections).

NOTE: In this mode, the low-heat only switch must be ON to select the low-heat only operation mode in response to closing the thermostat R-to-W1 circuit. Closing the thermostat R-to-W1-and-W2 circuits always causes high-heat operation, regardless of the setting of the low-heat-only switch.
The wall thermostat ″calls for heat″, closing the R to W1 circuit for low-heat or closing the R to W1 and-W2 circuits for high-heat. The furnace control performs a self-check, verifies the low-heat and high-heat pressure switch contacts LPS and HPS are open, and starts the inducer motor IDM in high-speed.

The start-up and shutdown functions and delays described in item 1 above apply to 2-stage heating mode as well, except for switching from low- to high-heat and vice versa.

1. **Switching From Low- To High- Heat**-If the thermostat R to W1 circuit is closed and the R to W2 circuit closes, the furnace control CPU will switch the inducer motor IDM speed from low to high. The high-heat pressure switch relay HPSR is de-energized to close the NC contact. When sufficient pressure is available the high-heat pressure switch HPS closes, and the high-heat gas valve solenoid GV-HI is energized. The blower motor BLWM will switch to HI HEAT speed five seconds after the R to W2 circuit closes.
2. **Switching From High- To Low- Heat**- If the thermostat R to W2 circuit opens, and the R to W1 circuit remains closed, the furnace control CPU will switch the inducer motor IDM speed from high to low. The high-heat pressure switch relay HPSR is energized to open the NC contact and de-energize the high-heat gas valve solenoid GV-HI. When the inducer motor IDM reduces pressure sufficiently, the high-heat pressure switch HPS will open. The gas valve solenoid GV-M will remain energized as long as the low-heat pressure switch LPS remains closed. The blower motor BLWM will switch to LO HEAT speed five seconds after the R to W2 circuit opens.

COOLING MODE

The thermostat “calls for cooling”

1. **Single-Speed Cooling**
   (See Fig. 27 or 28 and 50A, C, or E for thermostat connections.)

   The thermostat closes R-to-G-and-Y circuits. The R-to-Y circuit starts the outdoor unit, and R-to-G-and-Y/Y2 circuits start the furnace blower motor BLWM on COOL speed.
   The electronic air cleaner terminal EAC-1 is energized with 115-v when blower motor BLWM is operating.
   When the thermostat is satisfied, the R-to-G-and-Y circuits are opened. The outdoor unit will stop, and furnace blower motor BLWM will continue operating on COOL speed for an additional 90 sec. Jumper Y/Y2 to DHUM to reduce the cooling off -delay to 5 seconds.
2. **Two-Speed Cooling and Single-Stage Thermostat (Adaptive Mode)**
   (See Fig. 27 and 50A-H for thermostat connections.)

   This furnace can operate a two-speed cooling unit with a single-stage thermostat because the furnace control CPU includes a programmed adaptive sequence of controlled

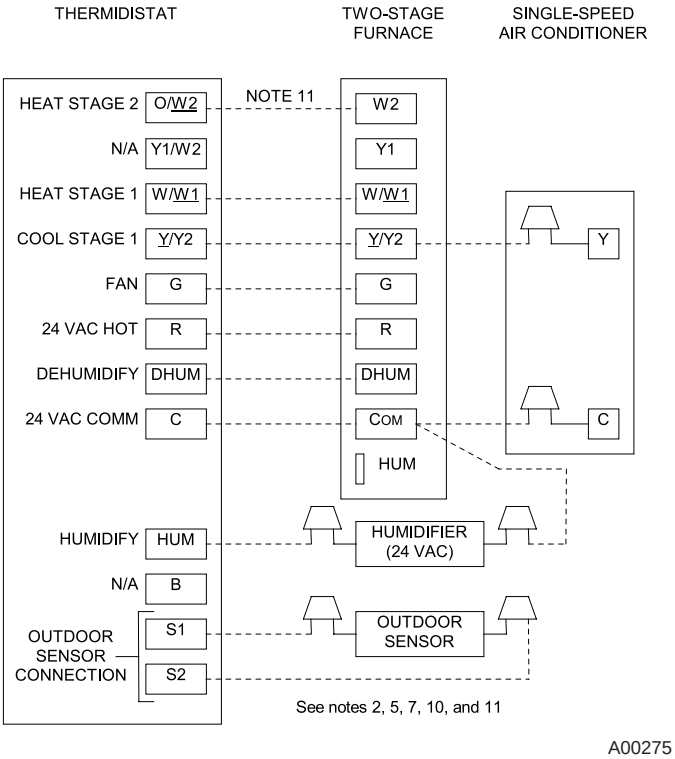

Fig. 50A—Two-Stage Furnace with Single-Speed Air Conditioner

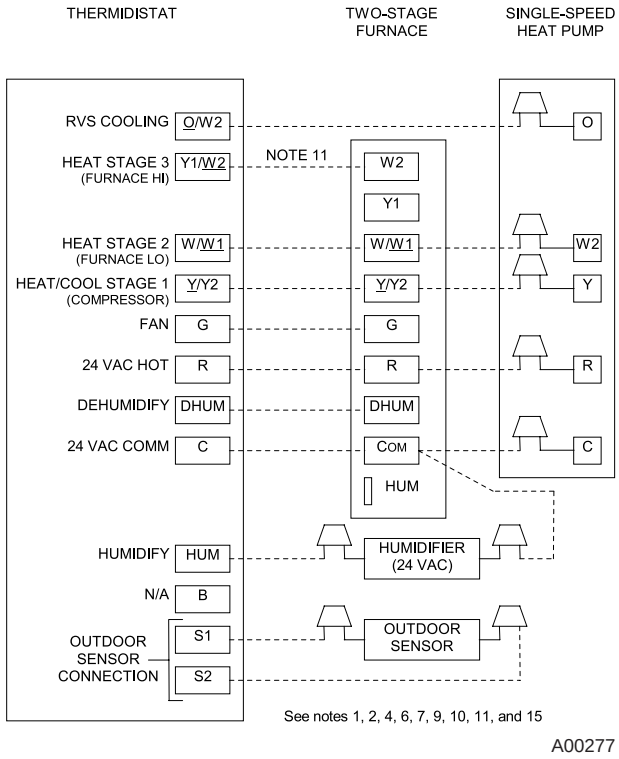

Fig. 50C—Two-Stage Furnace with Single-Speed Heat Pump (Dual Fuel)

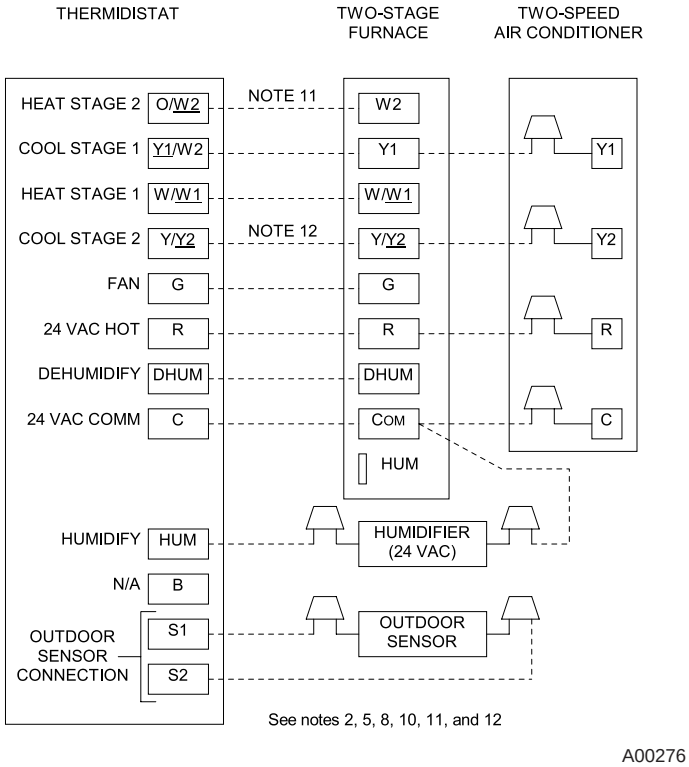

Fig. 50B—Two-Stage Furnace with Two-Speed Air Conditioner

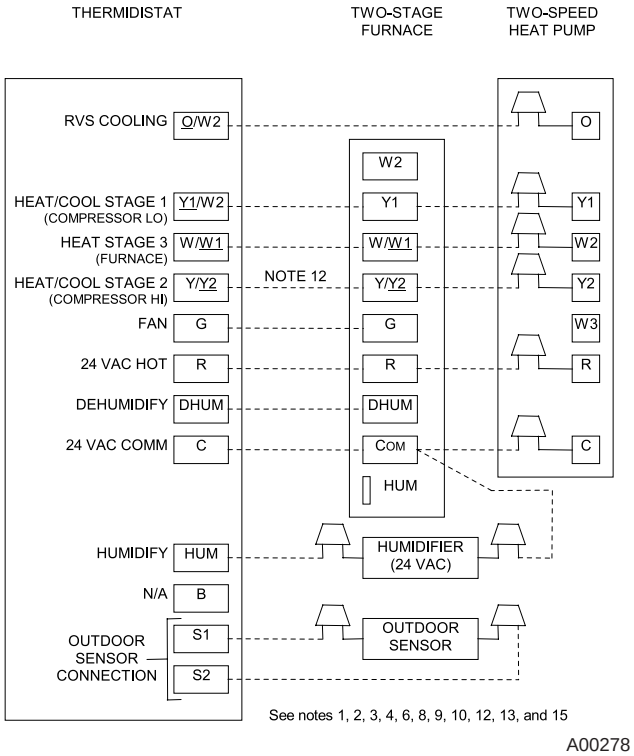

Fig. 50D—Two-Stage Furnace with Two-Speed Heat Pump (Dual Fuel)

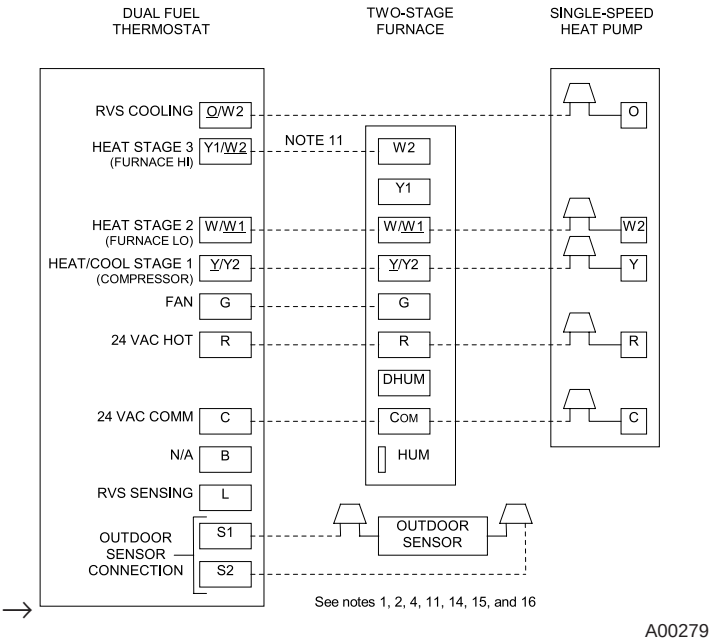

Fig. 50E—Dual Fuel Thermostat with Two-Stage Furnace and Single-Speed Heat Pump

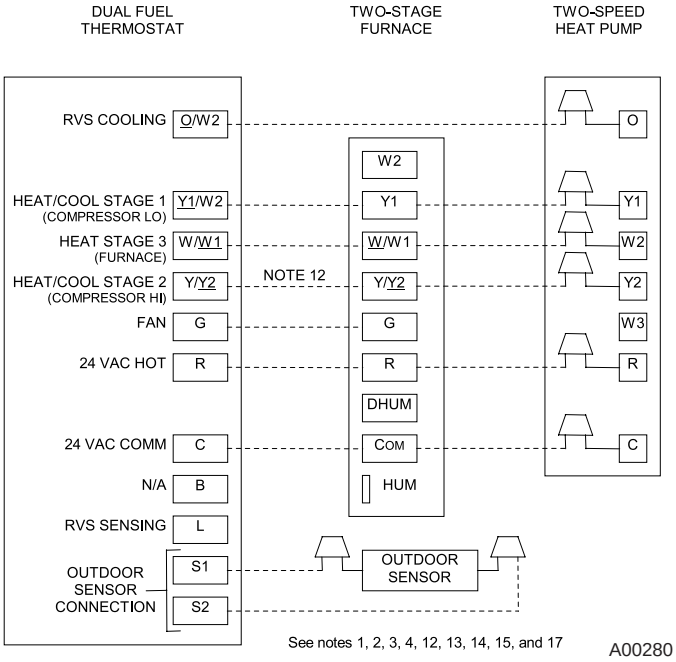

Fig. 50F—Dual Fuel Thermostat With Two-Stage Furnace and Two-Speed Heat Pump

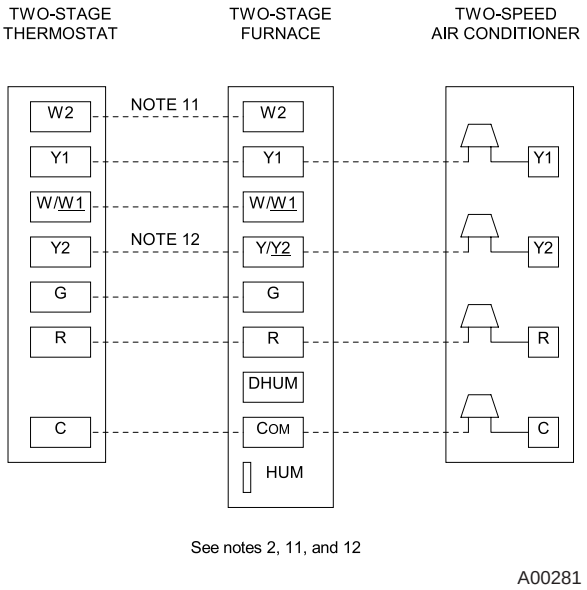

Fig. 50G—Two-Stage Thermostat With Two-Stage Furnace and Two-Speed Air Conditioner

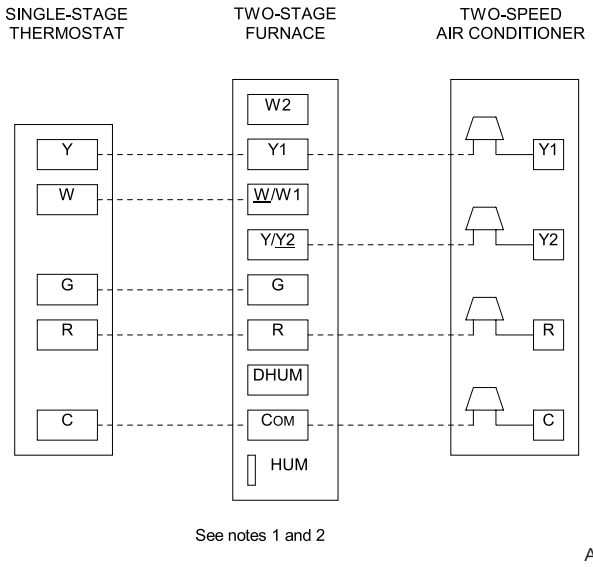

Fig. 50H—Single-Stage Thermostat With Two-Stage Furnace and Two-Speed Air Conditioner

operation, which selects low-cooling or high-cooling operation. This selection is based upon the stored history of the length of previous cooling period of the single-stage thermostat.

NOTE: The air conditioning relay disable jumper ACRDJ must be connected to enable the adaptive cooling mode in response to a call for cooling. (See Fig. 31.) When in place the furnace control CPU can turn on the air conditioning relay ACR to energize the Y/Y2 terminal and switch the outdoor unit to high-cooling.

The furnace control CPU can start up the cooling unit in either low- or high-cooling. If starting up in low-cooling, the furnace control CPU determines the low-cooling on-time (from 0 to 20 minutes) which is permitted before switching to high-cooling.

If the power is interrupted, the stored history is erased and the furnace control CPU will select low-cooling for up to 20 minutes and then energize the air conditioning relay ACR to energize the Y/Y2 terminal and switch the outdoor unit to high-cooling, as long as the thermostat continues to call for cooling. Subsequent selection is based on stored history of the thermostat cycle times.

The wall thermostat ″calls for cooling″, closing the R to G-and-Y circuits. The R to Y1 circuit starts the outdoor unit on low-cooling speed, and the R to G-and-Y1 circuits starts the furnace blower motor BLWM at low-cool speed (same speed as LO HEAT).

If the furnace control CPU switches from low-cooling to high-cooling, the furnace control CPU will energize the air conditioning relay ACR. When the air conditioning relay ACR is energized the R to Y1-and-Y2 circuits switch the

Notes for Fig. 50A-H:

1. Heat pump **MUST** have a high pressure switch for dual fuel applications.
2. Refer to outdoor equipment Installation Instructions for additional information and setup procedure.
3. Select the ″ZONE″ position on the two-speed heat pump control.
4. Outdoor Air Temperature Sensor must be attached in all dual fuel applications.
5. Dip switch No.1 on Thermidistat should be set in **OFF** position for air conditioner installations. This is factory default.
6. Dip switch No. 1 on Thermidistat should be set in **ON** position for heat pump installations.
7. Dip switch No. 2 on Thermidistat should be set in **OFF** position for single-speed compressor operation. This is factory default.
8. Dip switch No. 2 on Thermidistat should be set in **ON** position for two-speed compressor operation.
9. Configuration Option No. 10 ″Dual Fuel Selection″ must be turned **ON** in all dual fuel applications.
10. **NO** connection should be made to the furnace HUM terminal when using a Thermidistat.
11. Optional connection. If wire is connected, dip switch No. 1 on furnace control should be set in **ON** position to allow Thermidistat/Thermostat to control furnace staging.
12. Optional connection. If wire is connected, ACRDJ jumper on furnace control should be removed to allow Thermidistat/Thermostat to control outdoor unit staging.
13. Furnace must control its own high-stage heating operation via furnace control algorithm. This is factory default.
14. The RVS Sensing terminal ″L″ should not be connected. This is internally used to sense defrost operation.
15. **DO NOT SELECT** the ″FURNACE INTERFACE″ or ″BALANCE POINT″ option on the two-speed heat pump control board. This is controlled internally by the Thermidistat/Dual Fuel Thermostat.
16. Dip switch D on Dual Fuel Thermostat should be set in **OFF** position for single-speed compressor operation. This is factory default.
17. Dip switch D on Dual Fuel Thermostat should be set in **ON** position for two-speed compressor operation.

outdoor unit to high-cooling speed, and the R to G-and-Y1-and-Y/Y2 circuits switch the furnace blower motor BLWM to COOL speed.

NOTE: When transitioning from low-cooling to high-cooling the outdoor unit compressor will shut down for 1 minute while the BLWM continues to run at low-cool speed (same speed as LO-HEAT) until the outdoor unit compressor comes back on at high speed.

The electronic air cleaner terminal EAC-1 is energized with 115 vac whenever the blower motor BLWM is operating. When the thermostat is satisfied, the R to G-and-Y circuit are opened. The outdoor unit stops, and the furnace blower BLWM and electronic air cleaner terminal EAC-1 will remain energized for an additional 90 seconds. Jumper Y1 to DHUM to reduce the cooling off-delay to 5 seconds. (See Fig. 32.)

3. **Two-Speed Cooling and Two-Stage Thermostat (See Fig. 28 and Fig. 50A-G for thermostat connections)**

NOTE: The ACRDJ must be disconnected to allow thermostat control of the outdoor unit staging. (See Fig. 31.)

The thermostat closes the R to G and-Y1 circuits for low-cooling or closes the R to G and-Y1-and-Y2 circuits for high-cooling. The R to Y1 circuit starts the outdoor unit on low-cooling speed, and the R to G-and-Y1 circuit starts the furnace blower motor BLWM on low-cool speed (same speed as LO HEAT). The R to Y1-and-Y2 circuits start the outdoor unit on high-cooling speed, and the R to G-and-Y/Y2 circuits start the furnace blower motor BLWM on COOL speed.

The electronic air cleaner terminal EAC-1 is energized with 115 vac whenever the blower motor BLWM is operating. When the thermostat is satisfied, the R to G-and-Y1 or R to G-and-Y1-and-Y2 circuits are opened. The outdoor unit stops, and the furnace blower BLWM and electronic air cleaner terminal EAC-1 will remain energized for an additional 90 seconds. Jumper Y1 to DHUM to reduce the cooling off-delay to 5 seconds. (See Fig. 31.)

THERMIDISTAT MODE

See Fig. 50A-D for Thermidistat connections.

The dehumidification output, DHUM on the Thermidistat should be connected to the furnace control thermostat terminal DHUM. When there is a dehumidify demand, the DHUM input is activated, which means 24 vac signal is removed from the DHUM input terminal. In other words, the DHUM input logic is reversed. The DHUM input is turned ON when no dehumidify demand exists. Once 24 vac is detected by the furnace control on the DHUM input, the furnace control operates in Thermidistat mode.

The cooling operation described above also applies to operation with a Thermidistat. The exceptions are listed below:

a. When the R to G-and-Y1 circuit is closed and there is a demand for dehumidification, the furnace blower motor BLWM will continue running at low-cool speed (same speed as LO HEAT).

b. When the R to G-and Y/Y2 circuit is closed and there is a demand for dehumidification, the furnace blower motor BLWM will drop the blower speed from COOL to HI HEAT for a maximum of 10 minutes before reverting back to COOL speed. If there is still a demand for dehumidification after 20 minutes, the furnace control CPU will drop the blower speed back to HI HEAT speed. This alternating 10-minute cycle will continue as long as there is a call for cooling.

c. When the ″call for cooling″ is satisfied and there is a demand for dehumidification, the cooling blower-off delay is decreased from 90 seconds to 5 seconds.

CONTINUOUS BLOWER MODE

When the R to G circuit is closed by the thermostat, the blower motor BLWM will operate on continuous-blower speed (can be set to LO HEAT, HI HEAT, or COOL speed). Factory default is LO HEAT speed. Terminal EAC-1 is energized as long as the blower

motor BLWM is energized.

During a call for heat, the blower BLWM will stop during ignitor warm-up (17 seconds), ignition (7 seconds), and blower-ON delay (66 seconds), allowing the furnace heat exchangers to heat up more quickly, then restarts at the end of the blower-ON delay period at LO HEAT or HI HEAT speed respectively.

In high-heat, the furnace control CPU will hold the blower motor BLWM at HI HEAT speed during the selected blower-OFF delay period before reverting to continuous-blower speed.

When the thermostat ″calls for low-cooling″, the blower motor BLWM will switch to operate at low-cool speed (same speed as LO HEAT). When the thermostat is satisfied, the blower motor BLWM will operate an additional 90 seconds on low-cool speed before reverting back to continuous-blower speed.

When the thermostat ″calls for high-cooling″, the blower motor BLWM will operate at COOL speed. When the thermostat is satisfied, the blower motor BLWM will operate an additional 90 seconds on COOL speed before reverting back to continuous-blower speed.

When the R to G circuit is opened, the blower motor BLWM will continue operating for an additional 5 seconds, if no other function requires blower motor BLWM operation.

Continuous Blower Speed Selection from Thermostat -To select different continuous-blower speeds from the room thermostat, momentarily turn off the FAN switch or push-button on the room thermostat for 1-3 seconds after the blower motor BLWM is operating. The furnace control CPU will shift the continuous-blower speed from the factory setting of LO HEAT to HI HEAT speed. Momentarily turning off the FAN switch again at the thermostat will shift the continuous-blower speed from HI HEAT to COOL. Repeating the procedure will shift the continuous-blower speed from COOL to LO HEAT speed. The selection can be changed as many times as desired and is stored in the memory to be automatically used following a power interruption.

HEAT PUMP

When installed with a heat pump, the furnace control automatically changes the timing sequence to avoid long blower off times during demand defrost cycles. When the R to W/W1-and-Y1 or R to W/W1-and-Y1-and-G circuits are energized, the furnace control CPU will switch to or turn on the blower motor BLWM at low cool speed (same speed as LO HEAT), and begin a low-heat cycle. The blower motor BLWM will remain on until the end of the prepurge period, then shut off for 24 seconds then come back on at LO HEAT speed. When the W/W1 input signal disappears, the furnace control begins a normal inducer post-purge period and the blower remains running at LO HEAT speed . If the R to W/W1-and-Y1-and-G signals disappear at the same time, the blower motor BLWM will remain on for the selected blower-OFF delay period. If the R to W/W1-and-Y1 signals disappear, leaving the G signal, the blower motor BLWM will remain on for the selected blower-OFF delay period then switch to continuous-blower speed.

When the R to W/W1-and-Y/Y2, R to W/W1-and-Y/Y2-and-G, R to W/W1-and-Y1-and-Y/Y2, or R to W-and-Y1-and-Y/Y2-and-G circuits are energized the furnace control CPU will switch to or turn on the blower motor BLWM at COOL speed, and begin a high-heat cycle. The blower motor BLWM will remain on until the end of the prepurge period, then shut off for 24 seconds then come back on at HI HEAT speed. When the W/W1 input signal disappears, the furnace control begins a normal inducer post-purge period and the blower switches to COOL speed after a 3 second delay. If the R to W/W1-and-Y/Y2-and-G or R to W/W1-and-Y1-and-Y/Y2-and-G signals disappear at the same time, the blower motor BLWM will remain on for the selected blower-OFF delay period. If the R to W/W1-and-Y/Y2 or R to W/W1-and-Y1-and-Y/Y2 signals disappear, leaving the G signal, the blower motor BLWM will remain on for the selected blower-OFF delay period then switch to continuous-blower speed.

Step 3—Start-Up Procedures

PURGE GAS LINES

After all connections have been made, purge the gas lines and check for leaks.

⚠ WARNING

Never purge a gas line into a combustion chamber. Never test for gas leaks with an open flame. Use a commercially available soap solution made specifically for the detection of leaks to check all connections, as specified in ″Gas Piping″ and ″Start-up Adjustment, and Safety Check″ sections of these instructions. Failure to follow this warning can cause fire, explosion, personal injury, or death.

COMPONENT SELF-TEST

Remove blower access door. Disconnect the thermostat R lead from from furnace control board. Manually close blower door switch. Short (jumper) for approximately 2 sec. the COM-24v terminal on control to the TEST/TWIN 3/16-inch quick-connect terminal on control until the LED goes out. Remover jumper from terminals. (See Fig. 31.)

NOTE: The furnace control allows all components, except the gas valve, to be run for short period of time. This feature helps diagnose a system problem in case of a component failure. Component test feature will not operate if any thermostat signal is present at the control.

Component test sequence is as follows:

(1.) LED will display previous status code 4 times.

(2.) Inducer motor starts on high-speed and continues to run until Step 7 of component test sequence.

(3.) Hot surface ignitor is energized for 15 sec., then off.

(4.) Blower motor operates on LO-HEAT speed for 10 sec.

(5.) Blower motor operates on HI-HEAT speed for 10 sec.

(6.) Blower motor operates on COOL speed for 10 sec.

(7.) Inducer motor goes to low-speed for 10 sec., then stops.

(8.) Reconnect R lead to furnace control board, remove tape from blower door switch and re-install blower door.

PRIME CONDENSATE TRAP WITH WATER

⚠ CAUTION

Condensate trap must be PRIMED or proper draining may not occur. The condensate trap has internal chambers which can ONLY be primed by pouring water into the inducer drain side of condensate trap.

1. Remove upper inducer housing drain connection cap. (See Fig. 51.)
2. Connect field-supplied 1/2-in. ID tube to upper inducer housing drain connection.
3. Insert field-supplied funnel into tube.
4. Pour 1 quart of water into funnel/tube. Water should run through inducer housing, overfill condensate trap, and flow into open field drain. (See Fig. 52.)
5. Remove funnel and tube from inducer housing and replace drain connection cap and clamp.

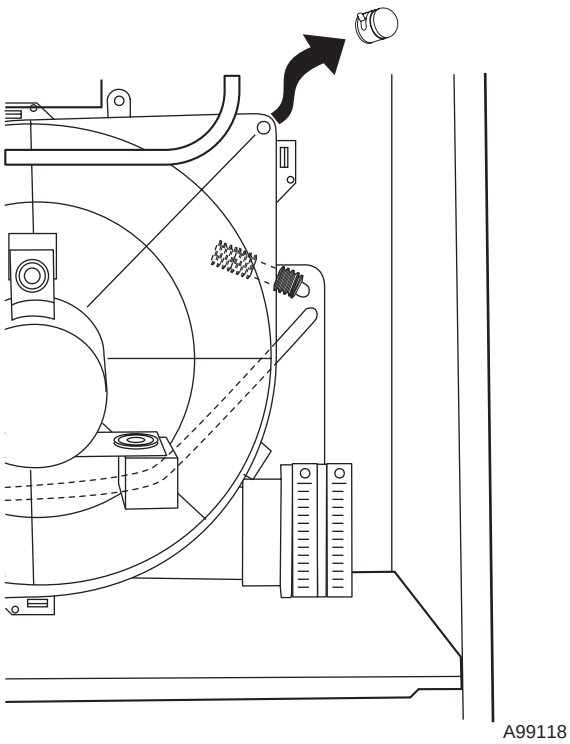

Fig. 51—Inducer Housing Drain Tube Cap

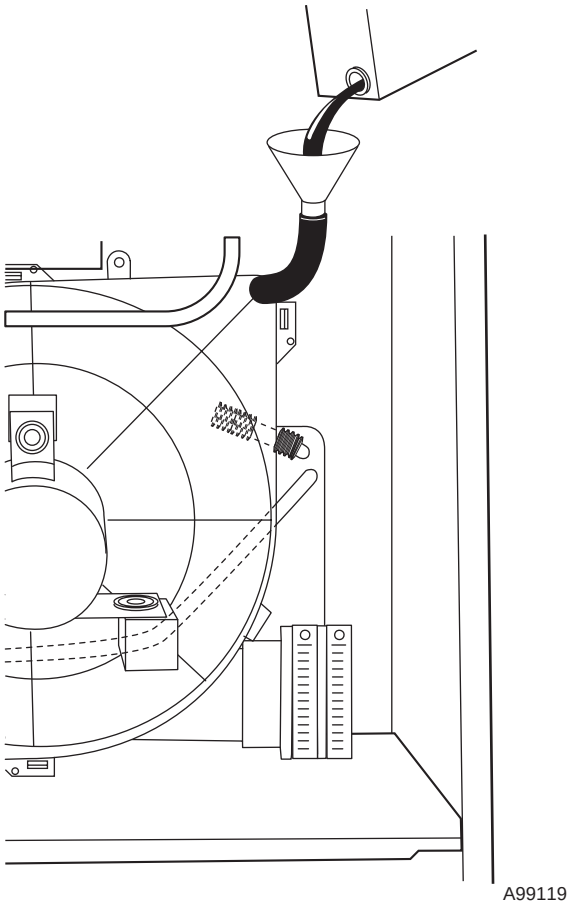

Fig. 52—Filling Condensate Trap

OPERATE FURNACE

Follow procedures on operating instructions label attached to furnace.

FURNACE RESTART

With furnace operating, set thermostat below room temperature and observe that furnace goes off. Set thermostat above room temperature and observe that furnace restarts.

Step 4—Adjustments

SET GAS INPUT RATE

Furnace gas input rate on rating plate is for installations at altitudes up to 2000 ft.

In the U.S.A., the input ratings for altitudes above 2000 ft must be reduced by 2 percent for each 1000 ft above sea level.

In Canada, the input ratings must be derated by 5 percent for altitudes of 2001 ft to 4500 ft above sea level.

Adjust manifold pressure to obtain input rate.

Furnace input rate must be within ± 2 percent of input on furnace rating plate adjusted for altitude.

1. Determine Natural Gas Orifice Size And Manifold Pressure For Correct Input.
   a. Obtain average gas heat value (at installed altitude) from local gas supplier.
   b. Obtain average gas specific gravity from local gas supplier.
   c. Verify furnace model and size. Table 10 can only be used for model 58MTA furnaces with heating inputs of 20,000/13,000 (High/Low) Btuh per burner.
   d. Find installation altitude in Table 10.

NOTE: For Canada altitudes of 2001 to 4500 ft, use U.S.A. altitudes of 2001 to 3000 ft in Table 10.

   e. Find closest natural gas heat value and specific gravity on Table 10.
   f. Follow heat value and specific gravity lines to point of intersection to find orifice size and manifold pressure settings for proper operation.

> EXAMPLE: (0-2000 ft altitude using Table 10)
> Heating value = 1050 Btu/cu ft
> Specific gravity = 0.62
> Therefore: Orifice No. 45
> Manifold pressure 3.6-in. wc for high heat
> 1.5-in. wc for low heat
> * Furnace is shipped with No. 45 orifices. In this example all main burner orifices are the correct size and do not need to be changed to obtain the proper input rate.

   g. Check and verify burner orifice size in furnace. NEVER ASSUME ORIFICE SIZE; ALWAYS CHECK AND VERIFY.
2. Adjust Manifold Pressure To Obtain Input Rate.
   a. Remove burner enclosure front.

NOTE: Manifold pressure MUST always be measured with burner enclosure front REMOVED.

   b. Remove regulator seal caps that conceal adjustment screws for low-and high-heat gas valve pressure regulators. (See Fig. 53.)
   c. Move setup switch SW-1 on control center to ON position. This keeps furnace locked in low-heat operation.
   d. Jumper R and W/W1 thermostat connections on control to start furnace.

TABLE 10—MODEL 58MTA ORIFICE SIZE AND HIGH/LOW-HEAT MANIFOLD PRESSURES FOR CORRECT INPUTS FOR USE WITH 060 THROUGH 120 SIZE FURNACES ONLY (TABULATED DATA BASED ON 20,000/13,000 BTUH PER BURNER, DERATED 2 PERCENT FOR EACH 1000 FT ABOVE SEA LEVEL)*

ALTITUDE RANGE (FT)		AVG GAS HEAT VALUE (BTU/CU FT)	SPECIFIC GRAVITY OF NATURAL GAS									
			0.58		0.60		0.62		0.64		0.66	
			Orifice no.	Manifold Pressure	Orifice no.	Manifold Pressure	Orifice no.	Manifold Pressure	Orifice no.	Manifold Pressure	Orifice no.	Manifold Pressure
U.S.A. and Canada	0 to 2000 0% derate	850	43	3.7/1.5	43	3.8/1.6	42	3.2/1.4	42	3.3/1.4	42	3.4/1.4
		875	43	3.5/1.5	43	3.6/1.5	43	3.7/1.6	43	3.8/12.6	42	3.2/1.4
		900	44	3.7/1.6	43	3.4/1.4	43	3.5/1.5	43	3.6/1.5	43	3.7/1.6
		925	44	3.5/1.5	44	3.7/1.6	44	3.8/1.6	43	3.4/1.4	43	3.5/1.5
		950	44	3.4/1.4	44	3.5/1.5	44	3.6/1.5	44	3.7/1.6	44	3.8/1.6
		975	44	3.2/1.3	44	3.3/1.4	44	3.4/1.4	44	3.5/1.5	44	3.6/1.5
		1000	45	3.7/1.6	45	3.8/1.6	44	3.2/1.4	44	3.4/1.4	44	3.5/1.5
		1025	45	3.5/1.5	45	3.6/1.5	45	3.7/1.6	44	3.2/1.3	44	3.3/1.4
		1050	45	3.3/1.4	45	3.4/1.5	45	3.6/1.5	45	3.7/1.6	45	3.8/1.6
		1075	45	3.2/1.3	45	3.3/1.4	45	3.4/1.4	45	3.5/1.5	45	3.6/1.5
		1100	47	3.6/1.5	47	3.7/1.6	45	3.2/1.4	45	3.4/1.4	45	3.5/1.5
ALTITUDE RANGE (FT)		AVG GAS HEAT VALUE (BTU/CU FT)	SPECIFIC GRAVITY OF NATURAL GAS									
			0.58		0.60		0.62		0.64		0.66	
			Orifice no.	Manifold Pressure	Orifice no.	Manifold Pressure	Orifice no.	Manifold Pressure	Orifice no.	Manifold Pressure	Orifice no.	Manifold Pressure
U.S.A. and Canada	U.S. Altitudes 2001 to 3000 or Canada Altitudes 2001 to 4500 5% derate	775	43	3.8/1.6	42	3.2/1.4	42	3.3/1.4	42	3.4/1.4	42	3.5/1.5
		800	43	3.5/1.5	43	3.7/1.5	43	3.8/1.6	42	3.2/1.4	42	3.3/1.4
		825	44	3.8/1.6	43	3.4/1.5	43	3.6/1.5	43	3.7/1.5	43	3.8/1.6
		850	44	3.6/1.5	44	3.7/1.6	44	3.8/1.6	43	3.5/1.5	43	3.6/1.5
		875	44	3.4/1.4	44	3.5/1.5	44	3.6/1.5	44	3.7/1.6	43	3.4/1.4
		900	44	3.2/1.4	44	3.3/1.4	44	3.4/1.4	44	3.5/1.5	44	3.6/1.5
		925	45	3.7/1.5	45	3.8/1.6	44	3.2/1.4	44	3.3/1.4	44	3.4/1.5
		950	45	3.5/1.5	45	3.6/1.5	45	3.7/1.6	45	3.8/1.6	44	3.3/1.4
		975	45	3.3/1.4	45	3.4/1.4	45	3.5/1.5	45	3.6/1.5	45	3.8/1.6
		1000	47	3.7/1.6	45	3.2/1.4	45	3.4/1.4	45	3.5/1.5	45	3.6/1.5
		1025	47	3.6/1.5	47	3.7/1.6	45	3.2/1.3	45	3.3/1.4	45	3.4/1.4
ALTITUDE RANGE (FT)		AVG GAS HEAT VALUE (BTU/CU FT)	SPECIFIC GRAVITY OF NATURAL GAS									
			0.58		0.60		0.62		0.64		0.66	
			Orifice no.	Manifold Pressure	Orifice no.	Manifold Pressure	Orifice no.	Manifold Pressure	Orifice no.	Manifold Pressure	Orifice no.	Manifold Pressure
U.S.A. Only	3001 to 4000 7% derate	750	43	3.7/1.6	43	3.8/1.6	42	3.3/1.4	42	3.4/1.4	42	3.5/1.5
		775	43	3.5/1.5	43	3.6/1.5	43	3.7/1.6	43	3.8/1.6	42	3.2/1.4
		800	44	3.7/1.6	43	3.4/1.4	43	3.5/1.5	43	3.6/1.5	43	3.7/1.6
		825	44	3.5/1.5	44	3.6/1.5	44	3.8/1.6	43	3.4/1.4	43	3.5/1.5
		850	44	3.3/1.4	44	3.4/1.4	44	3.5/1.5	44	3.7/1.5	44	3.8/1.6
		875	45	3.8/1.6	44	3.2/1.4	44	3.3/1.4	44	3.5/1.5	44	3.6/1.5
		900	45	3.6/1.5	45	3.7/1.6	45	3.8/1.6	44	3.3/1.4	44	3.4/1.4
		925	45	3.4/1.4	45	3.5/1.5	45	3.6/1.5	45	3.7/1.6	44	3.2/1.3
		950	45	3.2/1.4	45	3.3/1.4	45	3.4/1.5	45	3.5/1.5	45	3.7/1.5
		975	47	3.6/1.5	45	3.2/1.3	45	3.3/1.4	45	3.4/1.4	45	3.5/1.5
		1000	47	3.5/1.5	47	3.6/1.5	45	3.7/1.6	45	3.2/1.4	45	3.3/1.4

* Orifice numbers shown in shading are factory installed.
NOTE: Percents of derate are based on midpoints of U.S. altitude ranges.

e. Turn low-heat adjusting screw (3/32 hex Allen wrench) counterclockwise (out) to decrease input rate or clock-wise (in) to increase input rate.

NOTE: DO NOT set low-heat manifold pressure less than 1.3-in. wc or more than 1.7-in. wc for natural gas. If manifold pressure is outside this range, change main burner orifices.

⚠ CAUTION

DO NOT bottom out gas valve regulator adjusting screw. This can result in unregulated manifold pressure and result in excess overfire and heat exchanger failures.

NOTE: If orifice hole appears damaged or it is suspected to have been redrilled, check orifice hole with a numbered drill bit of correct size. Never redrill an orifice. A burr-free and squarely aligned orifice hole is essential for proper flame characteristics.

f. Move setup switch SW-1 to OFF position after completing low-heat adjustment.

TABLE 10—MODEL 58MTA ORIFICE SIZE AND HIGH/LOW-HEAT MANIFOLD PRESSURES FOR CORRECT INPUTS (Continued)

FOR USE WITH 060 THROUGH 120 SIZE FURNACES ONLY(TABULATED DATA BASED ON 20,000/13,000 BTUH PER BURNER, DERATED 2 PERCENT FOR EACH 1000 FT ABOVE SEA LEVEL)*

ALTITUDE RANGE (FT)		AVG GAS HEAT VALUE (BTU/CU FT)	SPECIFIC GRAVITY OF NATURAL GAS									
			0.58		0.60		0.62		0.64		0.66	
			Orifice no.	Manifold Pressure	Orifice no.	Manifold Pressure	Orifice no.	Manifold Pressure	Orifice no.	Manifold Pressure	Orifice no.	Manifold Pressure
U.S.A. Only	4001 to 5000 9% derate	725	43	3.7/1.5	43	3.8/1.6	42	3.2/1.4	42	3.3/1.4	42	3.4/1.4
		750	44	3.4/1.4	43	3.5/1.5	43	3.7/1.5	43	3.8/1.6	42	3.2/1.4
		775	44	3.7/1.6	44	3.8/1.6	43	3.4/1.4	43	3.5/1.5	43	3.7/1.5
		800	44	3.51.5	44	3.6/1.5	44	3.7/1.6	44	3.8/1.6	43	3.4/1.4
		825	44	3.2/1.4	44	3.4/1.4	44	3.5/1.5	44	3.6/1.5	44	3.7/1.6
		850	45	3.5/1.5	45	3.8/1.6	44	3.3/1.4	44	3.4/1.4	44	3.5/1.5
		875	45	3.3/1.4	45	3.6/1.5	45	3.7/1.6	44	3.2/1.3	44	3.3/1.4
		900	45	3.3/1.4	45	3.4/1.4	45	3.5/1.5	45	3.6/1.5	45	3.8/1.6
		925	47	3.7/1.6	45	3.2/1.4	45	3.3/1.4	45	3.4/1.5	45	3.6/1.5
		950	47	3.5/1.5	47	3.6/1.5	45	3.2/1.3	45	3.3/1.4	45	3.4/1.4
ALTITUDE RANGE (FT)		AVG GAS HEAT VALUE (BTU/CU FT)	SPECIFIC GRAVITY OF NATURAL GAS									
			0.58		0.60		0.62		0.64		0.66	
			Orifice no.	Manifold Pressure	Orifice no.	Manifold Pressure	Orifice no.	Manifold Pressure	Orifice no.	Manifold Pressure	Orifice no.	Manifold Pressure
U.S.A. Only	5001 to 6000 11% derate	700	43	3.6/1.5	43	3.7/1.6	42	3.2/1.3	42	3.3/1.4	42	3.4/1.4
		725	43	3.4/1.4	43	3.5/1.5	43	3.6/1.5	43	3.7/1.6	43	3.8/1.6
		750	44	3.6/1.5	44	3.7/1.6	43	3.4/1.4	43	3.5/1.5	43	3.6/1.5
		775	44	3.4/1.4	44	3.5/1.5	44	3.6/1.5	44	3.7/1.6	43	3.4/1.4
		800	44	3.2/1.3	44	3.3/1.5	44	3.4/1.4	44	3.5/1.5	44	3.6/1.5
		825	45	3.6/1.5	45	3.7/1.6	44	3.2/1.4	44	3.3/1.4	44	3.4/1.4
		850	45	3.4/1.4	45	3.5/1.5	45	3.6/1.5	45	3.8/1.6	44	3.2/1.4
		875	45	3.2/1.4	45	3.3/1.4	45	3.4/1.5	45	3.6/1.5	45	3.7/1.5
		900	47	3.6/1.5	47	3.7/1.6	45	3.3/1.4	45	3.4/1.4	45	3.5/1.5
		925	47	3.4/1.4	47	3.5/1.5	47	3.7/1.5	45	3.2/1.3	45	3.3/1.4
		950	48	3.7/1.6	48	3.8/1.6	47	3.5/1.5	47	3.6/1.5	47	3.7/1.6
		975	48	3.5/1.5	48	3.6/1.5	48	3.8/1.6	47	3.4/1.4	47	3.5/1.5
		1000	48	3.3/1.4	48	3.5/1.5	48	3.6/1.5	48	3.7/1.6	48	3.8/1.6
ALTITUDE RANGE (FT)		AVG GAS HEAT VALUE (BTU/CU FT)	SPECIFIC GRAVITY OF NATURAL GAS									
			0.58		0.60		0.62		0.64		0.66	
			Orifice no.	Manifold Pressure	Orifice no.	Manifold Pressure	Orifice no.	Manifold Pressure	Orifice no.	Manifold Pressure	Orifice no.	Manifold Pressure
U.S.A. Only	6001 to 7000 13% derate	650	42	3.2/1.3	42	3.3/1.4	42	3.4/1.4	42	3.5/1.5	42	3.6/1.6
		675	43	3.6/1.5	43	3.7/1.6	43	3.8/1.6	42	3.2/1.4	42	3.3/1.4
		700	44	3.8/1.6	43	3.4/1.5	43	3.6/1.5	43	3.7/1.6	43	3.8/1.6
		725	44	3.6/1.5	44	3.7/1.6	44	3.8/1.6	43	3.4/1.4	43	3.5/1.5
		750	44	3.3/1.4	44	3.4/1.5	44	3.6/1.5	44	3.7/1.6	44	3.8/1.6
		775	45	3.8/1.6	44	3.2/1.4	44	3.3/1.4	44	3.4/1.5	44	3.5/1.5
		800	45	3.5/1.5	45	3.7/1.5	45	3.8/1.6	44	3.2/1.4	44	3.3/1.4
		825	45	3.3/1.4	45	3.4/1.5	45	3.6/1.5	45	3.7/1.6	45	3.8/1.6
		850	47	3.7/1.6	45	3.2/1.4	45	3.4/1.4	45	3.5/1.5	45	3.6/1.5
		875	47	3.5/1.5	47	3.6/1.5	45	3.2/1.3	45	3.3/1.4	45	3.4/1.4

* Orifice numbers shown in shading are factory installed.
NOTE: Percents of derate are based on midpoints of U.S. altitude ranges.

g. Jumper R and W1 and W2 thermostat connections on control. (See Fig. 32.) This keeps furnace locked in high-heat operation.

h. Turn high-heat adjusting screw (3/32 hex Allen wrench) counterclockwise (out) to decrease input rate or clockwise (in) to increase rate.

NOTE: DO NOT set high-heat manifold pressure less than 3.2-in. wc or more than 3.8-in. wc for natural gas. If manifold pressure is outside this range, change main burner orifices.

i. When correct input is obtained, replace caps that conceal gas valve regulator adjustment screws. Main burner flame should be clear blue, almost transparent. (See Fig. 54.)

j. Remove jumper R-to-W1 and W2.

⚠ CAUTION

DO NOT redrill orifices. Improper drilling (burrs, out-of-round holes, etc.) can cause excessive burner noise and misdirection of burner flames. This can result in flame impingement of burners and heat exchangers causing failures.

3. Verify Natural Gas Input Rate By Clocking Gas Meter.

NOTE: Be sure all pressure tubing, combustion-air and vent pipes, and burner enclosure front are in place when checking input by clocking gas meter.

TABLE 10—MODEL 58MTA ORIFICE SIZE AND HIGH/LOW-HEAT MANIFOLD PRESSURES FOR CORRECT INPUTS (Continued) FOR USE WITH 060 THROUGH 120 SIZE FURNACES ONLY (TABULATED DATA BASED ON 20,000/13,000 BTUH PER BURNER, DERATED 2 PERCENT FOR EACH 1000 FT ABOVE SEA LEVEL)*

ALTITUDE RANGE (FT)		AVG GAS HEAT VALUE (BTU/CU FT)	SPECIFIC GRAVITY OF NATURAL GAS									
			0.58		0.60		0.62		0.64		0.66	
			Orifice no.	Manifold Pressure	Orifice no.	Manifold Pressure	Orifice no.	Manifold Pressure	Orifice no.	Manifold Pressure	Orifice no.	Manifold Pressure
U.S.A. Only	7001 to 8000 15% derate	625	43	3.8/1.6	42	3.3/1.4	42	3.4/1.4	42	3.5/1.5	42	3.6/1.5
		650	43	3.5/1.5	43	3.7/1.6	43	3.8/1.6	42	3.2/1.4	42	3.3/1.4
		675	44	3.8/1.6	43	3.4/1.4	43	3.5/1.5	43	3.6/1.5	43	3.7/1.6
		700	44	3.5/1.5	44	3.6/1.5	44	3.8/1.6	43	3.4/1.4	43	3.5/1.5
		725	44	3.3/1.4	44	3.4/1.4	44	3.5/1.5	44	3.6/1.5	44	3.7/1.6
		750	45	3.7/1.6	45	3.8/1.6	44	3.3/1.4	44	3.4/1.4	44	3.5/1.5
		775	45	3.5/1.5	45	3.6/1.5	45	3.7/1.6	45	3.8/1.6	44	3.3/1.4
		800	45	3.3/1.4	45	3.4/1.4	45	3.5/1.5	45	3.6/1.5	45	3.7/1.6
		825	47	3.6/1.5	45	3.2/1.3	45	3.3/1.4	45	3.4/1.4	45	3.5/1.5
		850	47	3.4/1.4	47	3.5/1.5	47	3.7/1.5	45	3.2/1.3	45	3.3/1.4
ALTITUDE RANGE (FT)		AVG GAS HEAT VALUE (BTU/CU FT)	SPECIFIC GRAVITY OF NATURAL GAS									
			0.58		0.60		0.62		0.64		0.66	
			Orifice no.	Manifold Pressure	Orifice no.	Manifold Pressure	Orifice no.	Manifold Pressure	Orifice no.	Manifold Pressure	Orifice no.	Manifold Pressure
U.S.A. Only	Altitudes 8001 to 9000 17% derate	600	43	3.8/1.6	42	3.3/1.4	42	3.4/1.4	42	3.5/1.5	42	3.6/1.5
		625	43	3.5/1.5	43	3.6/1.5	43	3.8/1.6	42	3.2/1.4	42	3.3/1.4
		650	44	3.7/1.6	43	3.4/1.4	43	3.5/1.5	43	3.6/1.5	43	3.7/1.6
		675	44	3.5/1.5	44	3.6/1.5	44	3.7/1.6	44	3.8/1.6	43	3.4/1.5
		700	44	3.2/1.4	44	3.3/1.4	44	3.4/1.5	44	3.6/1.5	44	3.7/1.6
		725	45	3.6/1.5	45	3.8/1.6	44	3.2/1.4	44	3.3/1.4	44	3.4/1.4
		750	45	3.4/1.4	45	3.5/1.5	45	3.6/1.5	45	3.8/1.6	44	3.2/1.4
		775	45	3.2/1.3	45	3.3/1.4	45	3.4/1.4	45	3.5/1.5	45	3.6/1.5
		800	47	3.6/1.5	47	3.7/1.6	45	3.2/1.3	45	3.3/1.4	45	3.4/1.4
ALTITUDE RANGE (FT)		AVG GAS HEAT VALUE (BTU/CU FT)	SPECIFIC GRAVITY OF NATURAL GAS									
			0.58		0.60		0.62		0.64		0.66	
			Orifice no.	Manifold Pressure	Orifice no.	Manifold Pressure	Orifice no.	Manifold Pressure	Orifice no.	Manifold Pressure	Orifice no.	Manifold Pressure
U.S.A. Only	9001 to 10,000 19% derate	575	43	3.8/1.6	42	3.2/1.4	42	3.3/1.4	42	3.3/1.5	42	3.6/1.5
		600	43	3.5/1.5	43	3.6/1.5	43	3.7/1.6	42	3.2/1.3	42	3.3/1.4
		625	44	3.7/1.6	44	3.8/1.6	43	3.5/1.5	43	3.6/1.5	43	3.7/1.6
		650	44	3.4/1.4	44	3.5/1.5	44	3.7/1.5	44	3.8/1.6	43	3.4/1.4
		675	44	3.8/1.6	44	3.3/1.4	44	3.4/1.4	44	3.5/1.5	44	3.6/1.5
		700	45	3.6/1.5	45	3.7/1.6	45	3.8/1.6	44	3.3/1.4	44	3.4/1.4
		725	45	3.3/1.4	45	3.4/1.5	45	3.6/1.5	45	3.7/1.6	45	3.8/1.6
		750	47	3.7/1.6	45	3.2/1.4	45	3.3/1.4	45	3.4/1.5	45	3.5/1.5
		775	47	3.5/1.5	47	3.6/1.5	47	3.7/1.6	45	3.2/1.4	45	3.3/1.4

*Orifice numbers shown in shading are factory installed.
NOTE: Percents of derate are based on midpoints of U.S. altitude ranges.

a. Calculate high-altitude adjustment (if required).
UNITED STATES
At altitudes above 2000 ft, this furnace has been approved for 2 percent derate for each 1000 ft above sea level. See Example and Table 11 for derate multiplier factor.
CANADA
At installation altitudes from 2001 to 4500 ft, this furnace must be derated 5 percent by an authorized Gas Conversion Station or Dealer. To determine correct input rate for altitude, see example above and use 0.95 as derate multiplier factor.

b. Reinstall burner box cover.

NOTE: Clocking gas input rate MUST always be performed with the burner box cover INSTALLED.

c. Check that gas valve adjustment caps are in place for proper input to be clocked.

d. Obtain yearly heat value average for local gas supply.

NOTE: Be sure heating value of gas used for calculations is correct for your altitude. Consult local gas utility for altitude adjustment of gas heating value.

e. Check and verify orifice size in furnace. NEVER ASSUME THE ORIFICE SIZE. ALWAYS CHECK AND VERIFY.

f. Turn off all other gas appliances and pilots.

g. Move setup switch SW-1 to ON position. This keeps furnace locked in low-heat operation.

h. Jumper R-to-W/W1.

i. Let furnace run for 3 minutes in low-heat operation.

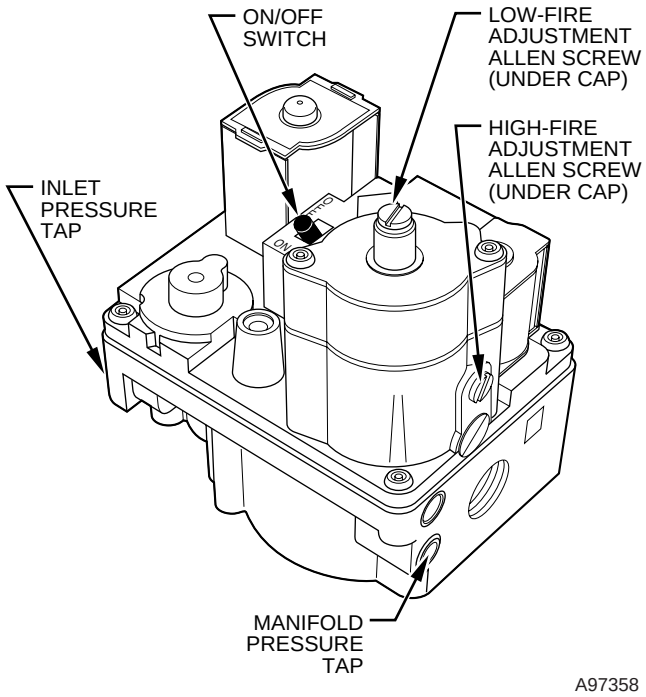

Fig. 53—Redundant Automatic Gas Control Valve

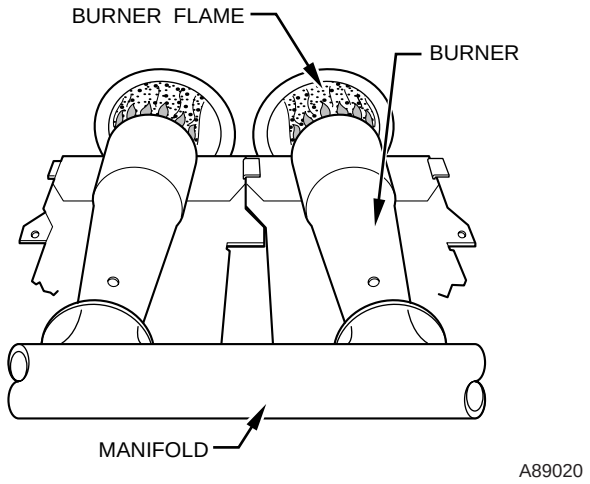

Fig. 54—Burner Flame

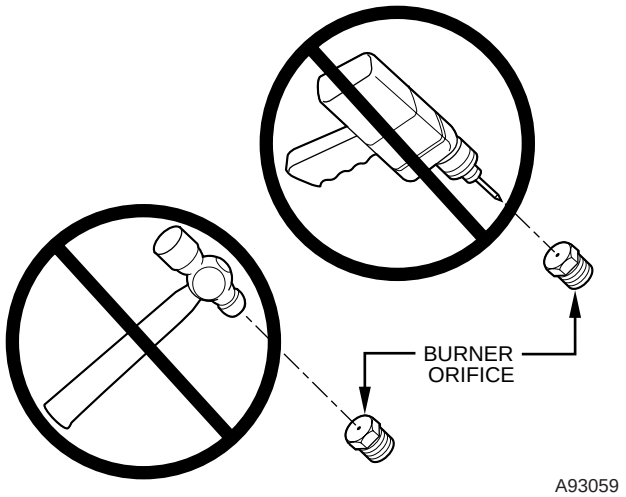

Fig. 55—Burner Orifice

j. Measure time (in sec) for gas meter to complete 1 revolution. Note reading.

EXAMPLE: 100,000 Btuh input furnace installed at 4300 ft.				
Furnace Input Rate at Sea Level	X	Derate Multiplier Factor	=	Furnace Input Rate at Installation Altitude
100,000	X	0.91	=	91,000

TABLE 11—ALTITUDE DERATE MULTIPLIER FOR U.S.A.

ALTITUDE (FT)	PERCENT OF DERATE	DERATE MULTIPLIER FACTOR FOR U.S.A.*
0–2000	0	1.00
2001–3000	4–6	0.95
3001–4000	6–8	0.93
4001–5000	8–10	0.91
5001–6000	10–12	0.89
6001–7000	12–14	0.87
7001–8000	14–16	0.85
8001–9000	16–18	0.83
9001–10,000	18–20	0.81

* Derate multiplier factor is based on midpoint altitude for altitude range.

k. Refer to Table 12 for cubic ft of gas per hr.

l. Multiply gas rate cu ft/hr by heating value (Btu/cu ft).

m. Move setup switch SW-1 to OFF position and jumper R and W1 and W2 thermostat connections. This keeps furnace locked in high-heat operation. Repeat items ’i’ through ’l’ for high-heat operation.

EXAMPLE: (0-2000 ft altitude)
Furnace input from rating plate is 100,000 Btuh.
Btu heating input = Btu/cu ft X cu ft/hr
Heating value of gas = 975 Btu/cu ft
Time for 1 revolution of 2-cu ft dial = 70 sec
Gas rate = 103 cu ft/hr (from Table 12)
Btu heating input = 103 X 975 = 100,425 Btuh. In this example, the orifice size and manifold pressure adjustment is within ±2 percent of the furnace input rate.

NOTE: Measured gas inputs (high-heat and low-heat) must be within ±2 percent of that stated on furnace rating plate when installed at sea level or derated per that stated above when installed at higher altitudes.

n. Remove jumper across R, W/W1, and W2 thermostat connections to terminate call for heat.

SET TEMPERATURE RISE

⚠ CAUTION

Temperature rise must be within limits specified on unit rating plate. Recommended operation is at midpoint of rise or above. Failure to follow this caution may result in overheating the heat exchangers or condensing flue gases in heat exchanger areas not designed for condensate.

Place SW-1 in ON position. Jumper R to W/W1 and W2 to check high-gas-heat temperature rise. To check low-gas-heat temperature rise, remove jumper to W2. Determine air temperature rise for both high and low gas heat. Do not exceed temperature rise ranges specified on unit rating plate for high and low gas heat.

TABLE 12—GAS RATE (CU FT/HR)

SECONDS FOR 1 REVOLUTION	SIZE OF TEST DIAL			SECONDS FOR 1 REVOLUTION	SIZE OF TEST DIAL		
	1 Cu Ft	2 Cu Ft	5 Cu Ft		1 Cu Ft	2 Cu Ft	5 Cu Ft
10	360	720	1800	**50**	72	144	360
11	327	655	1636	**51**	71	141	355
12	300	600	1500	**52**	69	138	346
13	277	555	1385	**53**	68	136	340
14	257	514	1286	**54**	67	133	333
15	240	480	1200	**55**	65	131	327
16	225	450	1125	**56**	64	129	321
17	212	424	1059	**57**	63	126	316
18	200	400	1000	**58**	62	124	310
19	189	379	947	**59**	61	122	305
20	180	360	900	**60**	60	120	300
21	171	343	857	**62**	58	116	290
22	164	327	818	**64**	56	112	281
23	157	313	783	**66**	54	109	273
24	150	300	750	**68**	53	106	265
25	144	288	720	**70**	51	103	257
26	138	277	692	**72**	50	100	250
27	133	267	667	**74**	48	97	243
28	129	257	643	**76**	47	95	237
29	124	248	621	**78**	46	92	231
30	120	240	600	**80**	45	90	225
31	116	232	581	**82**	44	88	220
32	113	225	563	**84**	43	86	214
33	109	218	545	**86**	42	84	209
34	106	212	529	**88**	41	82	205
35	103	206	514	**90**	40	80	200
36	100	200	500	**92**	39	78	196
37	97	195	486	**94**	38	76	192
38	95	189	474	**96**	38	75	188
39	92	185	462	**98**	37	74	184
40	90	180	450	**100**	36	72	180
41	88	176	439	**102**	35	71	178
42	86	172	429	**104**	35	69	173
43	84	167	419	**106**	34	68	170
44	82	164	409	**108**	33	67	167
45	80	160	400	**110**	33	65	164
46	78	157	391	**112**	32	64	161
47	76	153	383	**116**	31	62	155
48	75	150	375	**120**	30	60	150
49	73	147	367	**124**	29	58	145

This furnace must operate within the temperature rise ranges specified on the furnace rating plate. Determine the air temperature as follows:

a. Place duct thermometers in return and supply ducts as close to furnace as possible. Be sure thermometers do not 'see' heat exchangers so that radiant heat does not affect thermometer readings. This is particularly important with straight run ducts.

b. When thermometer readings stabilize, subtract return-air temperature from supply-air temperature to determine temperature rise.

If the temperature rise is outside this range, check the following:

a. Gas input for low- and high gas heat operation.

b. Derate for altitude if applicable.

c. Return and supply ducts for excessive restrictions causing static pressures greater than 0.50-in. wc.

d. Adjust temperature rise by adjusting blower speed. Increase blower speed to reduce temperature rise. Decrease blower speed to increase temperature rise.

⚠ WARNING

Disconnect 115-v electrical power before changing speed tap. Failure to follow this warning could result in personal injury.

For high-heat, the following connections can be made at HI HEAT on control:

a. Med-high (Yellow)

b. Med (Orange) -Available only on 5-speed motors. Factory setting for these motors.

c. Med-Low (Blue) - **Do NOT use for HI GAS-HEAT on 80K & 120K Btuh input models**. Factory setting for 4-speed motors.

⚠ CAUTION

To avoid operation outside the rated rise range:
1. NEVER connect Low Speed (Red) wire to ″HI HEAT″.
2. Do NOT connect Medium Low Speed (Blue) wire to ″HI -HEAT″ on 80,000 Btuh and 120,000 Btuh input model sizes.

For low-heat, the following connections can be made at LO -HEAT on control:

a. Med (Orange) -Available only on 5-speed motors

b. Med-Low (Blue)

c. Low (RED) - Factory setting.

To change blower motor speed selections for heating mode, remove blower motor lead from control HI-HEAT terminal. (See Fig. 32.) Select desired blower motor speed lead from one of the other motor leads and relocate it to HI-HEAT terminal. See Table 13 for lead color identification. Reconnect original lead on SPARE terminal. Follow this same procedure for proper selection of LO-HEAT and COOL speed selection.

Table 13–Speed Selection

LEAD COLOR	SPEED	AS SHIPPED
White	Common	COM
Black	High	Cool
Yellow	Med-High	SPARE
Orange†	Med	High-Gas Heat
Blue	Med-Low	Spare/High-Gas Heat
Red	Low*	Low-Gas Heat

* Continuous blower speed

† Available on 5-speed blowers only

→ Set Blower Off Delay

a. Remove Blower Access Door if installed.

b. Turn Dip switch 2 and 3 ON or OFF for desired blower off delay. See Table 9A and B or Fig. 31 and 32.

ADJUST BLOWER OFF DELAY (HEAT MODE)

If desired, the main blower off time delay period may be lengthened or shortened when operating in the heating mode to provide greater comfort. See Table 9 for position of switches and Fig. 31 or 32 for location of switches on control center.

SET THERMOSTAT HEAT ANTICIPATOR

When using a nonelectronic thermostat, the thermostat heat-anticipator must be set to match the amp draw of the electrical components in R-W/W1 circuit. Accurate amp draw readings can be obtained at thermostat subbase terminals R and W.

Fig. 56 illustrates an easy method of obtaining actual amp draw. The amp reading should be taken after blower motor has Started and furnace is operating in low heat. To operate furnace in

low-heat, first move SW-1 to ON position, then connect ammeter wires as shown in Fig. 56. The thermostat anticipator should NOT be in the circuit while measuring current. If thermostat has no subbase, the thermostat must be disconnected from R and W/W1 wires during current measurement Return SW-1 to final desired location after completing the reading.

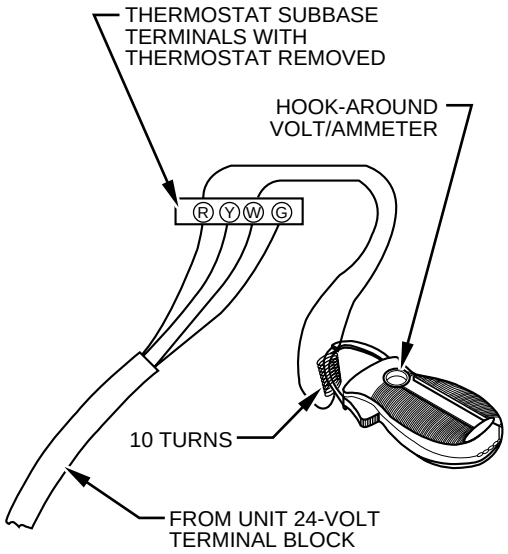

EXAMPLE: $\frac{\text{5.0 AMPS ON AMMETER}}{\text{10 TURNS AROUND JAWS}}$ = 0.5 AMPS FOR THERMOSTAT SETTING

A80201

Fig. 56—Amp Draw Check with Ammeter

See thermostat manufacturer's instructions for adjusting heat anticipator and for varying heating cycle length.

When using an electronic thermostat, set cycle rate for 3 cycles per hour.

Step 5—Check Safety Controls

This section covers the safety controls that must be checked before the installation is complete. The flame sensor, gas valve, and pressure switch were all checked in the Start-up procedure section as part of normal operation.

1. Check Primary Limit Control

   This control shuts off gas control system and energizes air-circulating blower motor if furnace overheats.

   Recommended method of checking this limit control is to gradually block off return air after furnace has been operating for a period of at least 5 minutes. As soon as limit control has shut off burners, return-air opening should be unblocked to permit normal air circulation. By using this method to check limit control, it can be established that limit is functioning properly and operates if there is a restricted return-air supply or motor failure. If limit control does not function during this test, cause must be determined and corrected.

2. Check Pressure Switch

   This control proves operation of draft inducer. Check switch operation as follows:

   a. Turn off 115-v power to furnace.

   b. Remove outer furnace door and disconnect inducer motor lead wires from wire harness.

   c. Turn on 115-v power to furnace.

   d. Set thermostat to "call for heat" and wait 1 minute. When pressure switch is functioning properly, hot surface ignitor should not glow, and control diagnostic light flashes a Status Code 32. If hot surface ignitor glows when inducer motor is disconnected, shut furnace down immediately. Determine reason pressure switch did not function properly and correct condition.

   e. Turn off 115-v power to furnace.

   f. Reconnect inducer motor leads, reinstall main furnace door, and turn on 115-v power supply.

Step 6—Checklist

1. Put away tools and instruments. Clean up debris.
2. Check SW-1 through SW-3 after completing installation to ensure desired settings for thermostat type (SW-1) and blower-OFF delay (SW-2 and SW-3).
3. Verify manual reset switch has continuity.
4. Verify that blower and outer doors are properly installed.
5. Cycle test furnace with room thermostat.
6. Check operation of accessories per manufacturer's instructions.
7. Review User's Guide with owner.
8. Leave literature packet near furnace.

CHECKLIST—INSTALLATION

LOAD CALCULATION

_____ Heating Load (Btuh)

_____ Cooling Load (Btuh)

_____ Furnace Model Selection

COMBUSTION AND VENT PIPING

Termination Location

_____ Roof or Sidewall

_____ Termination Kit — 2 Pipe or Concentric

_____ Combustion-Air Pipe Length

_____ Combustion-Air Elbow Quantity

_____ Vent Pipe Length

_____ Vent Pipe Elbow Quantity

_____ Pipe Diameter Determined from Sizing Table

_____ Pipe Sloped to Furnace

Pipe Insulation

_____ Over Ceilings

_____ Low-Ambient Exposed Pipes

Condensate Drain

_____ Unit Level or Pitched Forward

_____ Internal Tubing Connections Free of Kinks and Traps

_____ External Drain Connection Leak Tight and Sloped

_____ Condensate Trap Primed before Start-Up

_____ Heat Tape Installed if Required

CHECKLIST—START-UP

_____ Gas Input Rate (Set Within 2 percent of Rating Plate)

_____ Temperature Rise Adjusted

Thermostat Anticipator

_____ Anticipator Setting Adjusted or

_____ Cycle Rate (3 Cycles per Hr) Selected

Safety Controls Check Operation

_____ Primary Limit

_____ Pressure Switch

Copyright 2002 CARRIER Corp. • 7310 W. Morris St. • Indianapolis, IN 46231

Manufacturer reserves the right to discontinue, or change at any time, specifications or designs without notice and without incurring obligations.