59MN7A
Infinity® Modulating 4–Way Multipoise Condensing Gas Furnace Series 100

Carrier
turn to the experts

Product Data

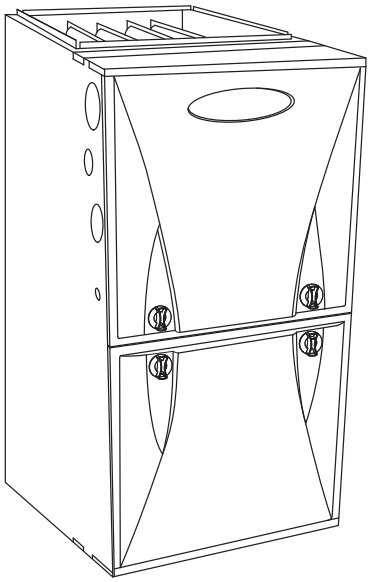

A11263

The 59MN7A Multipoise Variable-Capacity Condensing Gas Furnace features the modulating Infinity® System. The innovative modulating gas valve is at the heart of this furnace's quiet operation, along with the variable-speed ECM blower motor and variable-speed inducer motor. This furnace also provides 3.5 times tighter temperature control than single stage furnaces. With an Annual Fuel Utilization Efficiency (AFUE) up to 97.4%, this Infinity gas furnace provides exceptional savings over standard furnaces as well. This Infinity Gas Furnace also features 4-way multipoise installation flexibility. The 59MN7A can be vented as a direct vent/two-pipe furnace or as an optional ventilated combustion air application. A Carrier Infinity® Control and an Infinity Air Conditioner or Heat Pump can be used to form a complete Infinity System. All units meet California Air Quality Management District emission requirements. All sizes are design certified in Canada.

STANDARD FEATURES

- Our quietest furnace. Compare for yourself at HVACpartners.com
- Supports single- and multiple-zone Infinity systems
- Ideal height 35" (889 mm) cabinet: short enough for taller coils,but still allows enough room for service
- Infinity Features—match with the Infinity Control for Infinity System benefits
- Integral part of the Ideal Humidity System® Technology
- Silicon Nitride Power Heat™ Hot Surface Igniter
- SmartEvap™ technology helps control humidity levels in the home when used with a compatible humidity control system
- ComfortFan™ technology allows control of continuous fan speed from a compatible thermostat
- External Media Filter Cabinet included
- 4-way multipoise design for upflow, downflow or horizontal installations, with unique vent elbow and optional through-the-cabinet downflow venting capability
- Variable-Speed blower and inducer motors, modulating gas valve
- Self-diagnostics and extended diagnostic data through the Advanced Product Monitor (APM) accessory or Infinity User Interface
- Adjustable blower speed for cooling, continuous fan, and dehumidification
- Aluminized-steel primary heat exchanger
- Stainless-steel condensing secondary heat exchanger
- Propane convertible (See Accessory list).
- Factory-configured ready for upflow applications
- Fully-insulated casing including blower section
- Convenient Electronic Air Cleaner and Humidifier connections
- Direct-vent/sealed combustion or ventilated combustion air venting
- Installation flexibility: sidewall or vertical vent
- Residential installations may be eligible for consumer financing through the Retail Credit Program

LIMITED WARRANTY*

- 10 year parts and lifetime heat exchanger limited warranty to the original purchaser upon timely registration.
- Limited warranty period is five years for parts and twenty years for the heat exchanger if not registered within 90 days of installation.†

* For owner occupied, residential applications.

†Jurisdictions where warranty benefits cannot be conditioned on registration will receive registered limited warranty benefits.

INFINITY SERIES IdealHumidity greenspeed INTELLIGENCE ENERGY STAR DESIGN CERTIFIED CERTIFIED

AHRI CERTIFIED www.ahridirectory.org

Use of the AHRI Certified TM Mark indicates a manufacturer's participation in the program. For verification of certification for individual products, go to www.ahridirectory.org.

Certified System ISO 9001 QMI-SAI Global

Always Ask For FACTORY AUTHORIZED PARTS

SPECIFICATIONS

Heating Capacity and Efficiency			060-14	080-14	100-20	120-22
Input	Maximum Heat	(BTUH)	60,000	80,000	100,000	120,000
	Intermediate Heat	(BTUH)	39,000	52,000	65,000	78,000
	Minimum Heat	(BTUH)	24,000	32,000	40,000	48,000
Output	Maximum Heat	(BTUH)	59,000	78,000	97,000	117,000
	Intermediate Heat	(BTUH)	38,000	51,000	63,000	76,000
	Minimum Heat	(BTUH)	24,000	31,000	39,000	47,000
Efficiency	AFUE % (ICS)		97.4	97.4	97.1	97.2
Certified Temperature Rise Range °F (°C)		Maximum Heat	35 - 65 (19-36)	40 - 70 (21-38)	45 - 75 (25-41)	45 - 75 (25-41)
		Intermediate Heat	50 - 80 (27-44)	50 - 80 (27-44)	50 - 80 (27-44)	50 - 80 (27-44)
		Minimum Heat	35 -65 (19-36)	35 - 65 (19-36)	35 - 65 (19-36)	35 - 65 (19-36)
Airflow Capacity and Blower Data			**060-14**	**080-14**	**100-20**	**120-22**
Certified External Static Pressure (in. w.c.)		Heating	0.12	0.15	0.20	0.20
		Cooling	0.5	0.5	0.5	0.5
Airflow Delivery @ Rated ESP (CFM)		Maximum Heat	1075	1510	1515	1815
		Intermediate Heat	530	750	905	1100
		Minimum Heat	415	620	725	900
		Cooling	1335	1375	2030	2185
Cooling Capacity (tons) @ 400, 350 CFM/ton		400 CFM/ton	3	3.5	5	5.5
		350 CFM/ton	3.5	4	5.5	6
Direct-Drive Motor Type			Electronically Commutated Motor (ECM)			
Direct-Drive Motor HP			1/2	1/2	1	1
Motor Full Load Amps			7.7	7.7	12.8	12.8
RPM Range			300 - 1300			
Speed Selections			Variable (Communicating)			
Blower Wheel Dia. X Width		in.	11 x 8	11 x 8	11 x 10	11 x 11
Air Filtration System			Factory Supplied Media Cabinet Field Supplied Filter			
Filter Used for Certified Watt Data			KGAWF1306UFR	KGAWF1306UFR	KGAWF1406UFR	KGAWF1506UFR
Electrical Data			**060-14**	**080-14**	**100-20**	**120-22**
Input Voltage		Volts-Hertz-Phase	115-60-1			
Operating Voltage Range		Min-Max	104-127			
Maximum Input Amps		Amps	9.7	9.7	14.8	14.8
Unit Ampacity		Amps	12.7	12.7	19.1	19.1
Minimum Wire Size		AWG	14	14	12	12
Maximum Wire Length @ Minimum Wire Size		Feet	29	29	30	30
		(M)	(8.8)	(8.8)	(9.1)	(9.1)
Maximum Fuse/Ckt Bkr (Time-Delay Type Recommended)		Amps	15	15	20	20
Transformer Capacity (24vac output)			40 VA			
External Control Power Available		Heating	27.9 VA			
		Cooling	27.9 VA			
Controls			**060-14**	**080-14**	**100-20**	**120-22**
Gas Connection Size			1/2" - NPT			
Burners (Monoport)			3	4	5	6
Gas Valve (Redundant)		Manufacturer	White Rogers™			
		Minimum Inlet Gas pressure (in. W.C.)	4.5			
		Maximum Inlet Gas pressure (in. W.C.)	13.6			
Gas Conversion Kit - Natural to Propane			KGANP5201VSP			
Gas Conversion Kit - Propane to Natural			KGAPN4401VSP			
Manufactured (Mobile) Home Kit			*not approved for MH use*			
Ignition Device			Silicon Nitride			
Limit Control			180	170	160	160
Heating Blower Control (Heating Off-Delay)			Adjustable: 90, 120, 150, 180 seconds			
Cooling Blower Control (Time Delay Relay)			90 seconds			
Communication System			Infinity; Infinity Zoning			
Thermostat Connections			W2, Y1, DHUM, G, COM 24V, W/W1, Y/Y2, R			
Accessory Connections			EAC (115vac); HUM (24vac); 1-stg AC (via Y/Y2)			

MODEL NUMBER NOMENCLATURE

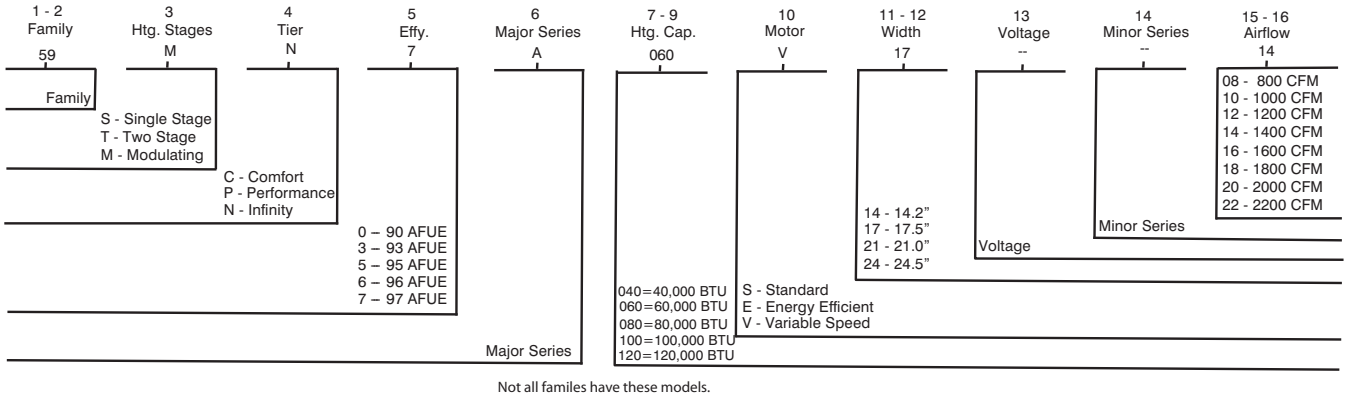

Not all familes have these models.

A11159

FURNACE COMPONENTS

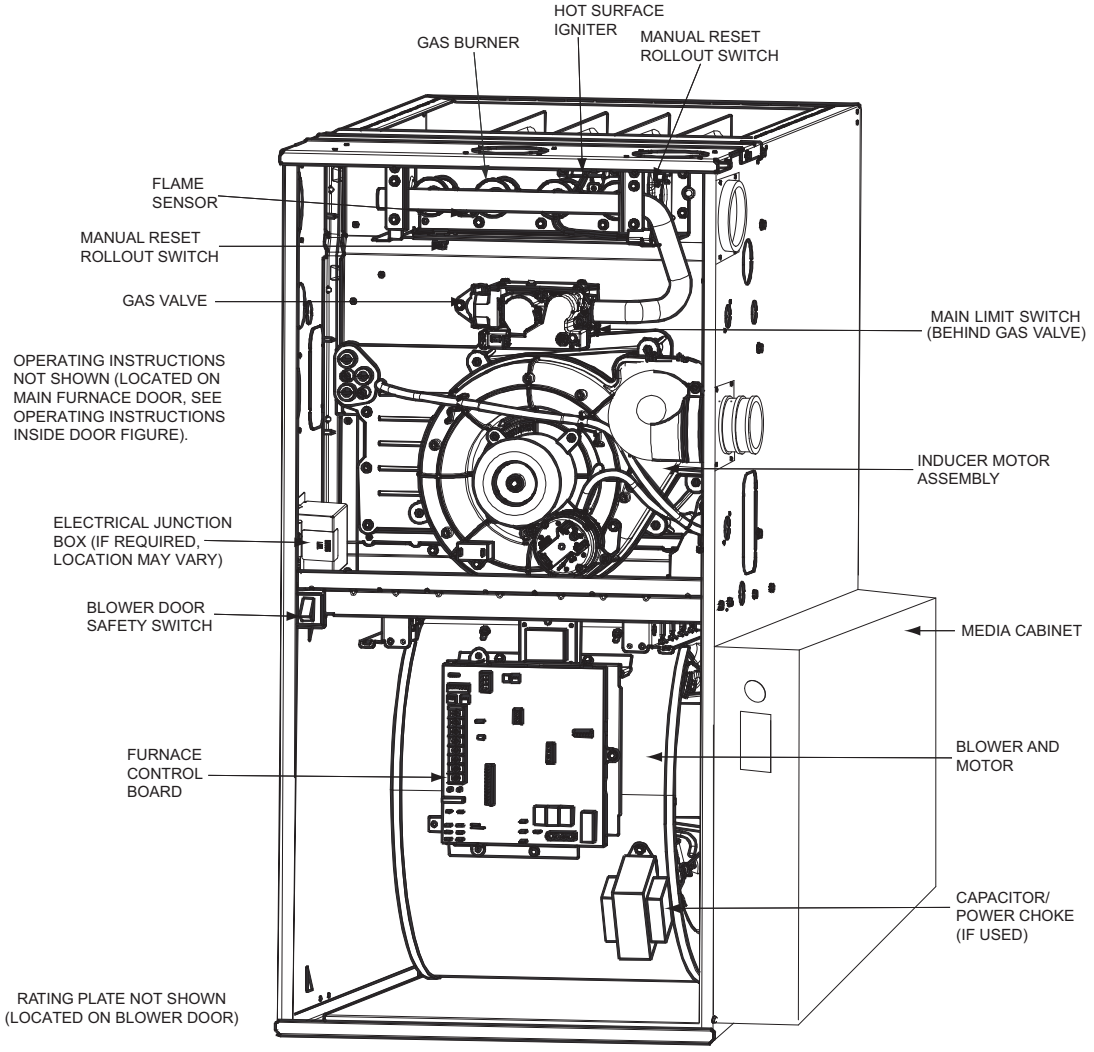

REPRESENTATIVE DRAWING ONLY, SOME MODELS MAY VARY IN APPEARANCE.

A11408

ACCESSORIES

DESCRIPTION	PART NUMBER	060-14	080-14	100-20	120-22
Venting, Drainage and Installation					
Vent Kit - Through the Cabinet	KGADC0101BVC	X	X	X	X
Vent Terminal - Concentric - 2” (51 mm)	KGAVT0701CVT	X	X	X	N/A
Vent Terminal - Concentric - 3” (76 mm)	KGAVT0801CVT	X	X	X	X
Vent Terminal Bracket - 2” (51 mm)	KGAVT0101BRA	X	X	X	N/A
Vent Terminal Bracket - 3” (76 mm)	KGAVT0201BRA	X	X	X	X
CPVC to PVC Drain Adapters - 1/2” CPVC to 3/4” PVC	KGAAD0110PVC	X	X	X	X
Horizontal Trap Grommet - Direct Vent	KGACK0101HCK	X	X	X	X
Freeze Protect Kit - Heat Patch for Drain Trap	KGAHT0201CFP	X	X	X	X
Freeze Protect Kit - Heat Tape	KGAHT0101CFP	X	X	X	X
Furnace Base Kit for Combustible Floors	KGASB0201ALL	X	X	X	X
Gas Conversion					
Gas Cnv Kit - Nat to LP; Var-spd Products	KGANP5201VSP	X	X	X	X
Gas Cnv Kit - LP to Nat; Var-spd Products	KGAPN4401VSP	X	X	X	X
Gas Orifice Kit - #42 (Nat Gas)	KGAHA0150N42	X	X	X	X
Gas Orifice Kit - #43 (Nat Gas)	KGAHA0250N43	X	X	X	X
Gas Orifice Kit - #44 (Nat Gas)	KGAHA0350N44	X	X	X	X
Gas Orifice Kit - #45 (Nat Gas)	KGAHA0450N45	X	X	X	X
Gas Orifice Kit - #46 (Nat Gas)	KGAHA0550N46	X	X	X	X
Gas Orifice Kit - #47 (Nat Gas)	KGAHA1550N47	X	X	X	X
Gas Orifice Kit - #48 (Nat Gas)	KGAHA1650N48	X	X	X	X
Gas Orifice Kit - #54 (LP)	KGAHA0650P54	X	X	X	X
Gas Orifice Kit - #55 (LP)	KGAHA0750P55	X	X	X	X
Gas Orifice Kit - #56 (LP)	KGAHA0850P56	X	X	X	X
Gas Orifice Kit - 1.25mm (LP)	KGAHA5750125	X	X	X	X
Gas Orifice Kit - 1.30mm (LP)	KGAHA5750130	X	X	X	X
Indoor Air Quality					
Carrier Infinity Air Purifier - 16x25 (406x635 mm)	GAPAAXCC1625-A08	X	X	X	X
Carrier Infinity Air Purifier - 20x25 (508x635 mm)	GAPAAXCC2025-A08	X	X	X	X
Carrier Infinity Air Purifier Repl. Filter- 16x25 (406x635 mm)	GAPACCCAR1625-A05	X	X	X	X
Carrier Infinity Air Purifier Repl. Filter- 20x25 (508x635 mm)	GAPACCCAR2025-A05	X	X	X	X
EZ Flex Cabinet 16” (406 mm)	EZXCABCC1016-A20	X	X	X	X
EZ Flex Cabinet 20” (508 mm)	EZXCABCC1020-A20	X	X	X	X
Cartridge Media Filter - 16” (406 mm)	FILXXCAR0016	X	X	X	X
Cartridge Media Filter - 20” (508 mm)	FILXXCAR0020	X	X	X	X
Cartridge Media Filter - 24” (610 mm)	FILXXCAR0024	X	X	X	X
EZ-Flex Filter - 16” (406 mm)	EXPXXFIL0016	X	X	X	X
EZ-Flex Filter - 20” (508 mm)	EXPXXFIL0020	X	X	X	X
EZ-Flex Filter - 24” (610 mm)	EXPXXFIL0024	X	X	X	X
EZ-Flex Filter with End Caps - 16” (406 mm)	EXPXXUNV0016	X	X	X	X
EZ-Flex Filter with End Caps - 20” (508 mm)	EXPXXUNV0020	X	X	X	X
EZ-Flex Filter with End Caps - 24” (610 mm)	EXPXXUNV0024	X	X	X	X
Filter Pack (6 pack) - Washable - 16x25x1 (406x635x25 mm)	KGAWF1306UFR	X	X	X	X
Filter Pack (6 pack) - Washable - 24x25x1 (610x635x25 mm)	KGAWF1506UFR	X	X	X	X
Controls					
Infinity™ Control User Interface	SYSTXCCUID01-V	X	X	X	X
Infinity™ Control Zoning User Interface	SYSTXCCUIZ01-V	X	X	X	X
Service Tools					
Advanced Product Monitor - APM (CBP, Only)	KGASD0301APM	X	X	X	X
ECM Motor Simulator Kit	KGASD0301FMS	X	X	X	X

X = Used with the model furnace
N/A = Not used with the model furnace

AIR DELIVERY - CFM (BOTTOM RETURN WITH FILTER)

(SW1-5 and SW4-3 set to OFF, except as indicated. See Notes 1 and 2.)

INPUT BTUH	Cooling Switch Settings			External Static Pressure (E.S.P.)									
	SW2-3	SW2-2	SW2-1	0.1	0.2	0.3	0.4	0.5	0.6	0.7	0.8	0.9	1.0
60000	OFF	OFF	OFF	1060	1070	1080	1080	1075	1065	1050	1035	1025	1010
	OFF	OFF	ON	545	530	520	525	510					
	OFF	ON	OFF	710	710	710	695	690					
	OFF	ON	ON	875	880	890	895	895	890	885	880	870	855
	ON	OFF	OFF	1060	1070	1080	1080	1075	1065	1050	1035	1025	1010
	ON	OFF	ON	1235	1240	1250	1255	1255	1250	1230	1190	1155	1115
	ON	ON	OFF	1235	1240	1250	1255	1255	1250	1230	1190	1155	1115
	ON	ON	ON	1235	1240	1250	1255	1255	1250	1230	1190	1155	1115
	Maximum Cooling Airflow[2]			1425	1425	1405	1370	1335	1300	1260	1225	1190	1155
	Maximum Heat Airflow[3]			1075	1085	1095	1095	1090	1080	1065	1050	1035	1020
	Intermediate Heat Airflow[3]			535	515	505	515	495					
	Minimum Heat Airflow[3]			420	410	415	400	380					

INPUT BTUH	Cooling Switch Settings			External Static Pressure (E.S.P.)									
	SW2-3	SW2-2	SW2-1	0.1	0.2	0.3	0.4	0.5	0.6	0.7	0.8	0.9	1.0
80000	OFF	OFF	OFF	1055	1065	1080	1075	1065	1050	1045	1035	1025	1005
	OFF	OFF	ON	520	505	505	495	490					
	OFF	ON	OFF	665	685	680	660	665					
	OFF	ON	ON	885	895	905	900	900	895	885	875	860	845
	ON	OFF	OFF	1055	1065	1080	1075	1065	1050	1045	1035	1025	1005
	ON	OFF	ON	1245	1245	1255	1255	1260	1255	1250	1235	1220	1185
	ON	ON	OFF	1245	1245	1255	1255	1260	1255	1250	1235	1220	1185
	ON	ON	ON	1245	1245	1255	1255	1260	1255	1250	1235	1220	1185
	Maximum Cooling Airflow[2]			1520	1485	1450	1415	1375	1335	1300	1265	1225	1190
	Maximum Heat Airflow[3]			1520	1485	1450	1415	1375	1335	1300	1265	1225	1190
	Intermediate Heat Airflow[3]			755	745	755	755	765					
	Minimum Heat Airflow[3]			620	625	630	620	610					

AIR DELIVERY - CFM (BOTTOM RETURN WITH FILTER) (CONTINUED)

(SW1-5 and SW4-3 set to OFF, except as indicated. See Notes 1 and 2.)

INPUT BTUH	Cooling Switch Settings			External Static Pressure (E.S.P.)									
	SW2-3	SW2-2	SW2-1	0.1	0.2	0.3	0.4	0.5	0.6	0.7	0.8	0.9	1.0
100000	OFF	OFF	OFF	1815	1810	1805	1800	1785	1765	1745	1720	1710	1685
	OFF	OFF	ON	765	775	755	730	710					
	OFF	ON	OFF	930	940	935	930	935					
	OFF	ON	ON	1095	1120	1120	1105	1095	1100	1085	1075	1055	1050
	ON	OFF	OFF	1245	1270	1275	1280	1290	1280	1285	1270	1260	1245
	ON	OFF	ON	1440	1445	1455	1445	1450	1440	1440	1425	1415	1405
	ON	ON	OFF	1815	1810	1805	1800	1785	1765	1745	1720	1710	1685
	ON	ON	ON	1815	1810	1805	1800	1785	1765	1745	1720	1710	1685
	Maximum Cooling Airflow[2]			2055	2055	2050	2045	2030	2015	1995	1940	1870	1805
	Maximum Heat Airflow[3]			1495	1515	1515	1520	1525	1520	1515	1505	1490	1480
	Intermediate Heat Airflow[3]			900	905	900	900	890					
	Minimum Heat Airflow[3]			725	725	720	690	670					

INPUT BTUH	Cooling Switch Settings			External Static Pressure (E.S.P.)									
	SW2-3	SW2-2	SW2-1	0.1	0.2	0.3	0.4	0.5	0.6	0.7	0.8	0.9	1.0
120000[6]	OFF	OFF	OFF	1850	1855	1860	1855	1850	1830	1805	1775	1750	1730
	OFF	OFF	ON	765	745	740	705	680					
	OFF	ON	OFF	930	925	915	900	885					
	OFF	ON	ON	1095	1100	1110	1105	1085					
	ON	OFF	OFF	1265	1255	1265	1280	1275	1285	1270	1260	1250	1230
	ON	OFF	ON	1465	1455	1470	1465	1465	1470	1455	1450	1435	1415
	ON	ON	OFF	1850	1855	1860	1855	1850	1830	1805	1775	1750	1730
	ON	ON	ON	2200	2200	2200	2190	2185	2170	2145	2085	1990	1890
	Maximum Cooling Airflow[2]			2200	2200	2200	2190	2185	2170	2145	2085	1990	1890
	Maximum Heat Airflow[3]			1815	1820	1825	1820	1815	1795	1775	1745	1720	1700
	Intermediate Heat Airflow[3]			1095	1100	1110	1105	1085					
	Minimum Heat Airflow[3]			905	900	890	875	855					

1. Nominal 350 CFM/ton cooling airflow is delivered with SW1-5 and SW4-2 set to OFF.
   Set SW1-5 to ON for nominal 400 CFM/ton (+15% airflow).
   Set SW4-3 to ON for nominal 325 CFM/ton (-7% airflow).
   Set both SW1-5 and SW4-3 to ON for nominal 370 CFM/ton (+7% airflow).
2. Maximum cooling airflow is achieved when switches SW3-1, SW3-2, SW3-3 and SW1-5 are set to ON, and SW4-3 is set to OFF.
3. All heating CFM's are when minimum/intermediate heat rise adjustment switch (SW1-3) and comfort/efficiency adjustment switch (SW1-4) are both set to OFF.
4. Ductwork must be sized for maximum-heating CFM within the operational range of E.S.P. Operation within the blank areas of the chart is not recommended because maximum-heat operation will be above 1.0 E.S.P.
5. All airflows on 21" (533 mm) casing size furnaces are 5% less on side return only installations.)
6. Side returns for 24.5" (622 mm) casing sizes require two sides, or side and bottom, to allow sufficient airflow at the return of the furnace.

MAXIMUM EQUIVALENT VENT LENGTH - FT. (M)

NOTE: Maximum Equivalent Vent Length (MEVL) does NOT include elbows or terminations. Use Table 2 - Deductions from Maximum Equivalent Vent Length to determine allowable vent length for each application.

Table 1 – Maximum Equivalent Vent Length - Ft. (M)
0 to 4500 Ft. (0 to 1370 M) Altitude

Altitude FT (M)	Unit Size BTU/Hr	DIRECT VENT (2-PIPE) AND VENTILATED COMBUSTION AIR ONLY									
		Vent Pipe Diameter (in.)									
		1-1/2		2		2-1/2		3		4	
0 to 2000 (0 to 610)	60,000	55	(16.8)	135	(41.1)	235	(71.6)	265	(80.8)	NA	
	80,000	35	(10.7)	130	(39.6)	175	(53.3)	235	(71.6)	265	(80.8)
	100,000	NA		50	(15.2)	110	(33.5)	235	(71.6)	265	(80.8)
	120,000	NA		NA		15	(4.6)	100	(30.5)	250	(76.2)
2001 to 3000 (610 to 914)	60,000	45	(13.7)	127	(38.7)	222	(67.7)	250	(76.2)	NA	
	80,000	30	(9.1)	90	(27.4)	165	(50.3)	222	(67.7)	249	(75.9)
	100,000	NA		40	(12.2)	104	(31.7)	223	(68.0)	250	(76.2)
	120,000	NA		NA		11	(3.4)	93	(28.3)	237	(72.2)
3001 to 4000 (914 to 1219)	60,000	40	(12.2)	119	(36.3)	210	(64.0)	235	(71.6)	NA	
	80,000	25	(7.6)	85	(25.9)	155	(47.2)	210	(64.0)	232	(70.7)
	100,000	NA		40	(12.2)	98	(29.9)	211	(64.3)	236	(71.9)
	120,000	NA		NA		8	(2.4)	86	(26.2)	224	(68.3)
4001 to 4500 (1219 to 1370)	60,000	35	(10.7)	115	(35.1)	204	(62.2)	228	(69.5)	NA	
	80,000	23	(7.0)	85	(25.9)	150	(45.7)	202	(61.6)	224	(68.3)
	100,000	NA		40	(12.2)	94	(28.7)	205	(62.5)	229	(69.8)
	120,000	NA		NA		NA		83	(25.3)	217	(66.1)

* See notes at end of venting tables.
*See Table 3 for altitudes over 4500 ft. (1370 M)

Table 2 – Deductions from Maximum Equivalent Vent Length - Ft. (M)

Pipe Diameter (in):	1-1/2		2		2-1/2		3*		4*	
Mitered 90° Elbow	8	(2.4)	8	(2.4)	8	(2.4)	NA	NA	NA	NA
Medium Radius 90° Elbow	5	(1.5)	5	(1.5)	5	(1.5)	NA	NA	NA	NA
Long Radius 90° Elbow	3	(0.9)	3	(0.9)	3	(0.9)	3	(0.9)	3	(0.9)
Mitered 45° Elbow	4	(1.2)	4	(1.2)	4	(1.2)	NA	NA	NA	NA
Medium Radius 45° Elbow	2.5	(0.8)	2.5	(0.8)	2.5	(0.8)	NA	NA	NA	NA
Long Radius 45° Elbow	1.5	(0.5)	1.5	(0.5)	1.5	(0.5)	1.5	(0.5)	1.5	(0.5)
Tee	16	(4.9)	16	(4.9)	16	(4.9)	16	(4.9)	16	(4.9)

* Note: 3– and 4–in. Vent pipe systems require long radius elbows.

Venting System Length Calculations

The maximum length for each vent pipe (inlet or exhaust) equals the Maximum Equivalent Vent Length (MEVL) from Table 1 or Table 3 minus the number of elbows multiplied by the deduction for each elbow in Table 2.

Standard vent terminations and concentric vent terminations count for zero deductions.

Example

A direct-vent 60,000 Btuh furnace installed at 2100 ft. (640 m) with 2-in.(51 mm) Vent piping. Venting system includes, **FOR EACH PIPE**, (3) 90° long radius elbows, (2) 45° long radius elbows and a concentric vent kit.

Maximum Equivalent Vent Length				=	127 ft.	(From Table 1)
Deduct (3) 90 long radius	3	x	3 ft.	=	- 9 ft.	(From Table 2)
Deduct (2) 45 long radius	2	x	1.5 ft.	=	- 3 ft.	(From Table 2)
Maximum Vent Length				=	115 ft.	For **EACH** vent or inlet pipe

MAXIMUM EQUIVALENT VENT LENGTH - FT. (M)

NOTE: Maximum Equivalent Vent Length (MEVL) does NOT include elbows or terminations. Use Table 2 - Deductions from Maximum Equivalent Vent Length to determine allowable vent length for each application.

Table 3 – Maximum Equivalent Vent Length - Ft. (M)
4501 to 10,000 Ft. (0 to 1370 M) Altitude

Altitude FT (M)	Unit Size	DIRECT VENT (2-PIPE) AND VENTILATED COMBUSTION AIR ONLY									
		Vent Pipe Diameter									
		1-1/2		2		2-1/2		3		4	
4501 to 5000 (1370 to 1524)	60,000	35	(10.7)	111	(33.8)	198	(60.4)	221	(67.4)	NA	
	80,000	23	(7.0)	85	(25.9)	146	(44.5)	195	(59.4)	216	(65.8)
	100,000	NA		40	(12.2)	91	(27.7)	200	(61.0)	222	(67.7)
	120,000	NA		NA		NA		80	(24.4)	211	(64.3)
5001 to 6000 (1524 to 1829)	60,000	37	(11.3)	103	(31.4)	186	(56.7)	207	(63.1)	NA	
	80,000	22	(6.7)	76	(23.2)	137	(41.8)	183	(55.8)	200	(61.0)
	100,000	NA		33	(10.1)	85	(25.9)	188	(57.3)	208	(63.4)
	120,000	NA		NA		NA		74	(22.6)	199	(60.7)
6001 to 7000 (1829 to 2134)	60,000	35	(10.7)	96	(29.3)	174	(53.0)	194	(59.1)	NA	
	80,000	20	(6.1)	71	(21.6)	120	(36.6)	171	(52.1)	185	(56.4)
	100,000	NA		31	(9.4)	79	(24.1)	178	(54.3)	195	(59.4)
	120,000	NA		NA		NA		68	(20.7)	187	(57.0)
7001 to 8000 (2134 to 2438)	60,000	32	(9.8)	89	(27.1)	163	(49.7)	181	(55.2)	NA	
	80,000	18	(5.5)	66	(20.1)	120	(36.6)	159	(48.5)	170	(51.8)
	100,000	NA		29	(8.8)	73	(22.3)	167	(50.9)	182	(55.5)
	120,000	NA		NA		NA		62	(18.9)	175	(53.3)
8001 to 9000 (2438 to 2743)	60,000	30	(9.1)	82	(25.0)	152	(46.3)	168	(51.2)	NA	
	80,000	17	(5.2)	62	(18.9)	111	(33.8)	148	(45.1)	156	(47.5)
	100,000	NA		27	(8.2)	67	(20.4)	157	(47.9)	170	(51.8)
	120,000	NA		NA		NA		56	(17.1)	164	(50.0)
9001 to 10,000 (2743 to 3048)	60,000	27	(8.2)	76	(23.2)	142	(43.3)	156	(47.5)	NA	
	80,000	15	(4.6)	57	(17.4)	103	(31.4)	137	(41.8)	142	(43.3)
	100,000	NA		24	(7.3)	62	(18.9)	147	(44.8)	157	(47.9)
	120,000	NA		NA		NA		51	(15.5)	153	(46.6)

Notes:

1. 3– and 4–in. Vent pipe systems require long radius elbows.
2. Vent sizing for Canadian installations over 4500 ft. (1370 M) above sea level are subject to acceptance by the local authorities having jurisdiction.
3. NA – Not allowed; pressure switch will not close, or flame disturbance may result.
4. Do not use pipe size greater than those specified in table or incomplete combustion, flame disturbance, or flame sense lockout may occur.
5. Size both the combustion –air and vent pipe independently, then use the larger diameter for both pipes.
6. Assume the two 45° elbows equal one 90° elbow. Wide radius elbows are desirable and may be required in some cases.
7. Elbows and pipe sections within the furnace casing and at the vent termination should not be included in vent length or elbow count.
8. The minimum pipe length is 5 ft. (1.5 M) for all applications.
9. Use 3–in. (76 mm) diameter vent termination kit for installations requiring 4–in. (102 mm) diameter pipe.

MAXIMUM ALLOWABLE EXPOSED VENT PIPE LENGTH INSULATION TABLE - FT. / M

Maximum Length of Uninsulated and Insulated Vent Pipe-Ft (M)																	
Modulating Furnace High Heat Input	Winter Design Temp °F (°C)	Pipe Length in Ft. & M	No Insulation					3/8-in. (9.5 mm)					1/2-in. (12.7 mm)				
			Pipe Diameter-in. (mm)					Pipe Diameter-in. (mm)					Pipe Diameter-in. (mm)				
			1.5	2.0	2.5	3.0	4.0	1.5	2.0	2.5	3.0	4.0	1.5	2.0	2.5	3.0	4.0
			(38)	(51)	(64)	(76)	(102)	(38)	(51)	(64)	(76)	(102)	(38)	(51)	(64)	(76)	(102)
60000	20 (-10)	Ft.	34.0	29.0	28.0	23.0	N/A	55.0	88.0	79.0	69.0	N/A	55.0	104.0	93.0	81.0	N/A
		M	10.4	8.8	8.5	7.0	N/A	16.8	26.8	24.1	21.0	N/A	16.8	31.7	28.3	24.7	N/A
	0 (-20)	Ft.	14.0	9.0	7.0	0.0	N/A	55.0	49.0	43.0	34.0	N/A	55.0	60.0	52.0	42.0	N/A
		M	4.3	2.7	2.1	0.0	N/A	16.8	14.9	13.1	10.4	N/A	16.8	18.3	15.8	12.8	N/A
	-20 (-30)	Ft.	5.0	0.0	0.0	0.0	N/A	41.0	32.0	26.0	18.0	N/A	50.0	40.0	33.0	24.0	N/A
		M	1.5	0.0	0.0	0.0	N/A	12.5	9.8	7.9	5.5	N/A	15.2	12.2	10.1	7.3	N/A
	-40 (-40)	Ft.	0.0	0.0	0.0	0.0	N/A	30.0	21.0	16.0	8.0	N/A	37.0	28.0	22.0	13.0	N/A
		M	0.0	0.0	0.0	0.0	N/A	9.1	6.4	4.9	2.4	N/A	11.3	8.5	6.7	4.0	N/A
80000	20 (-10)	Ft.	35.0	39.0	39.0	33.0	25.0	35.0	118.0	107.0	92.0	76.0	35.0	130.0	125.0	109.0	90.0
		M	10.7	11.9	11.9	10.1	7.6	10.7	36.0	32.6	28.0	23.2	10.7	39.6	38.1	33.2	27.4
	0 (-20)	Ft.	22.0	16.0	14.0	7.0	0.0	35.0	69.0	60.0	49.0	35.0	35.0	83.0	72.0	60.0	45.0
		M	6.7	4.9	4.3	2.1	0.0	10.7	21.0	18.3	14.9	10.7	10.7	25.3	21.9	18.3	13.7
	-20 (-30)	Ft.	11.0	5.0	2.0	0.0	0.0	35.0	46.0	39.0	29.0	16.0	35.0	57.0	48.0	37.0	23.0
		M	3.4	1.5	0.6	0.0	0.0	10.7	14.0	11.9	8.8	4.9	10.7	17.4	14.6	11.3	7.0
	-40 (-40)	Ft.	4.0	0.0	0.0	0.0	0.0	35.0	33.0	26.0	17.0	4.0	35.0	41.0	34.0	24.0	11.0
		M	1.2	0.0	0.0	0.0	0.0	10.7	10.1	7.9	5.2	1.2	10.7	12.5	10.4	7.3	3.4
100000	20 (-10)	Ft.	N/A	47.0	47.0	41.0	32.0	N/A	50.0	110.0	112.0	93.0	N/A	50.0	110.0	132.0	110.0
		M	N/A	14.3	14.3	12.5	9.8	N/A	15.2	33.5	34.1	28.3	N/A	15.2	33.5	40.2	33.5
	0 (-20)	Ft.	N/A	21.0	19.0	12.0	1.0	N/A	50.0	74.0	61.0	45.0	N/A	50.0	89.0	74.0	57.0
		M	N/A	6.4	5.8	3.7	0.3	N/A	15.2	22.6	18.6	13.7	N/A	15.2	27.1	22.6	17.4
	-20 (-30)	Ft.	N/A	8.0	6.0	0.0	0.0	N/A	50.0	49.0	38.0	23.0	N/A	50.0	60.0	48.0	32.0
		M	N/A	2.4	1.8	0.0	0.0	N/A	15.2	14.9	11.6	7.0	N/A	15.2	18.3	14.6	9.8
	-40 (-40)	Ft.	N/A	1.0	0.0	0.0	0.0	N/A	42.0	34.0	24.0	10.0	N/A	50.0	43.0	32.0	18.0
		M	N/A	0.3	0.0	0.0	0.0	N/A	12.8	10.4	7.3	3.0	N/A	15.2	13.1	9.8	5.5
120000	20 (-10)	Ft.	N/A	N/A	15.0	49.0	40.0	N/A	N/A	15.0	100.0	111.0	N/A	N/A	15.0	100.0	131.0
		M	N/A	N/A	4.6	14.9	12.2	N/A	N/A	4.6	30.5	33.8	N/A	N/A	4.6	30.5	39.9
	0 (-20)	Ft.	N/A	N/A	15.0	17.0	6.0	N/A	N/A	15.0	75.0	57.0	N/A	N/A	15.0	90.0	70.0
		M	N/A	N/A	4.6	5.2	1.8	N/A	N/A	4.6	22.9	17.4	N/A	N/A	4.6	27.4	21.3
	-20 (-30)	Ft.	N/A	N/A	10.0	2.0	0.0	N/A	N/A	15.0	48.0	32.0	N/A	N/A	15.0	59.0	42.0
		M	N/A	N/A	3.0	0.6	0.0	N/A	N/A	4.6	14.6	9.8	N/A	N/A	4.6	18.0	12.8
	-40 (-40)	Ft.	N/A	N/A	1.0	0.0	0.0	N/A	N/A	15.0	32.0	17.0	N/A	N/A	15.0	41.0	25.0
		M	N/A	N/A	0.3	0.0	0.0	N/A	N/A	4.6	9.8	5.2	N/A	N/A	4.6	12.5	7.6

* Pipe length (ft) specified for maximum pipe lengths located in unconditioned spaces. Pipes located in unconditioned space cannot exceed total allowable pipe length calculated from Table 1 or 3.

† Insulation thickness based on R value of 3.5 per in.

RETURN AIR TEMPERATURE

This furnace is designed for continuous return-air minimum temperature of 60°F (15°C) db or intermittent operation down to 55°F (13°C) db such as when used with a night setback thermometer. Return-air temperature must not exceed 80°F (27°C) db. Failure to follow these return air limits may affect reliability of heat exchangers, motors and controls.

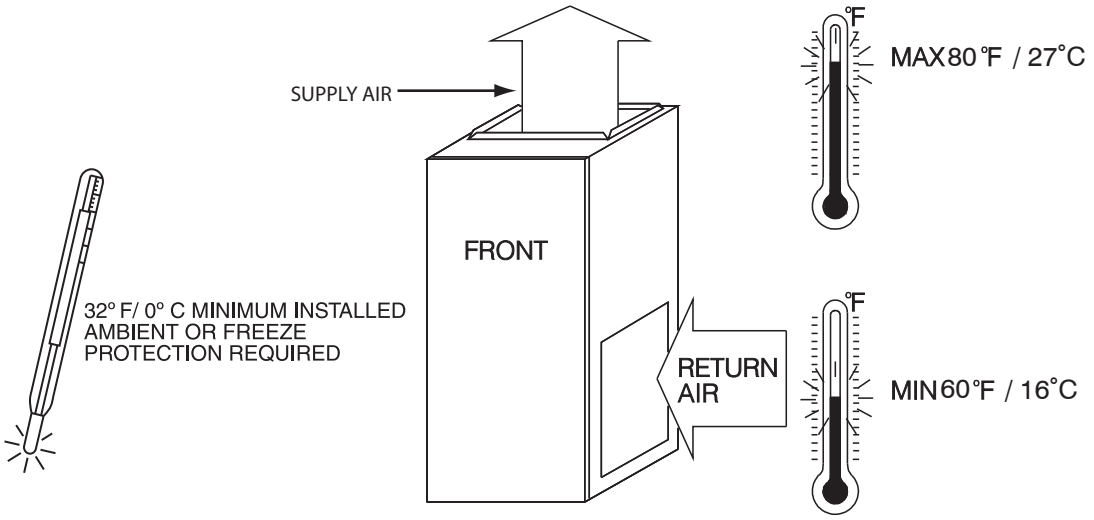

A10490

MINIMUM CLEARANCES TO COMBUSTIBLE MATERIALS

POSITION	CLEARANCE
Rear	0 (0 mm)
Front (Combustion air openings in furnace and in structure)	1 in. (25 mm)
Required for service	*24 in. (610 mm)
All Sides of Supply Plenum	1 in. (25 mm)
Sides	0 (0 mm)
Vent	0 (0 mm)
Top of Furnace	1 in. (25 mm)

* Recommended

VENTILATED COMBUSTION-AIR PIPE FOR ATTIC/CRAWLSPACE APPLICATIONS

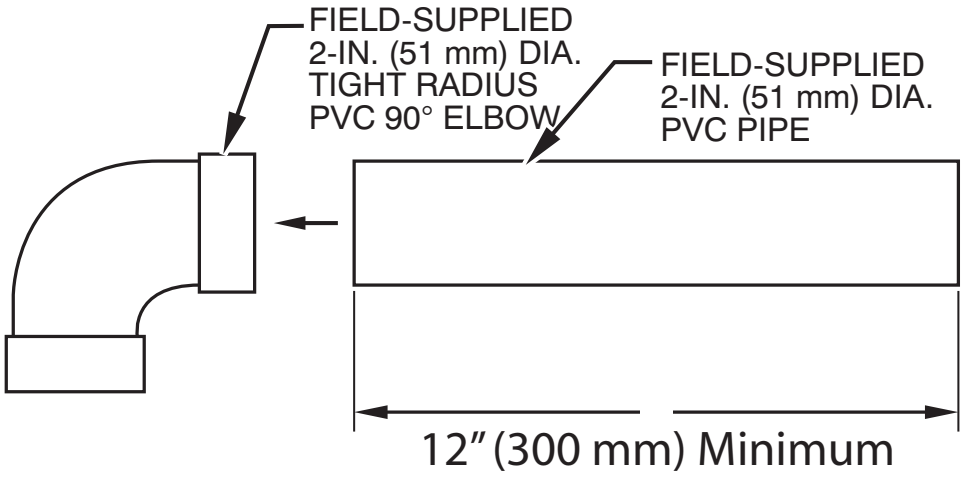

A11487

NOTE: See Installation Instructions for specific venting configurations.

DOWNFLOW SUBBASE

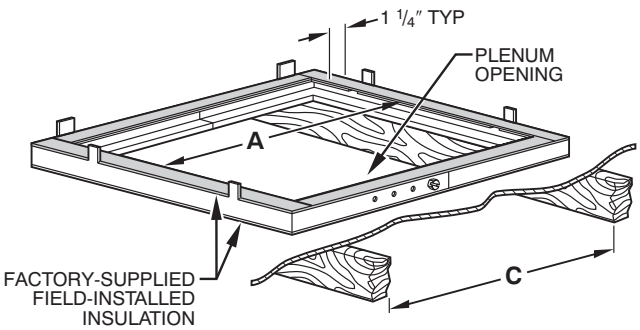

A97427

Assembled

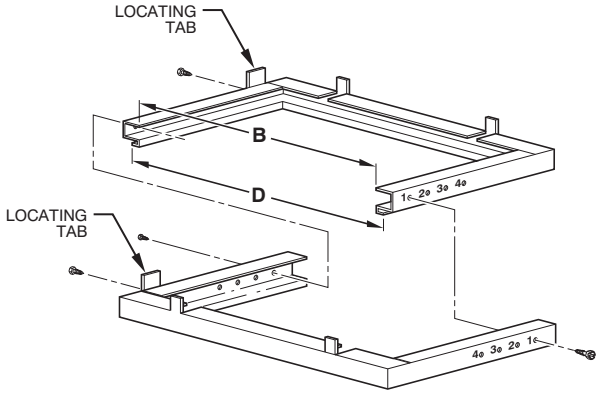

A88207

Disassembled

DIMENSIONS (IN. / MM)						
FURNACE CASING WIDTH	FURNACE IN DOWNFLOW APPLICATION	PLENUM OPENING*		FLOOR OPENING		HOLE NO. FOR WIDTH ADJUSTMENT
		A	B	C	D	
17–1/2 (444.5)	Furnace with or without Cased Coil Assembly or Coil Box	15–1/8 (384.2)	19 (482.6)	16–3/4 (425.5)	20–3/8 (517.5)	3
21 (533.4)	Furnace with or without Cased Coil Assembly or Coil Box	18–5/8 (396.4)	19 (482.6)	20–1/4 (514.4)	20–3/8 (517.5)	2
24–1/2 (622.3)	Furnace with or without Cased Coil Assembly or Coil Box	22–1/8 (562.0)	19 (482.6)	23–3/4 (603.3)	20–3/8 (517.5)	1

*The plenum should be constructed 1/4–in. (6 mm) smaller in width and depth than the plenum dimensions shown above.

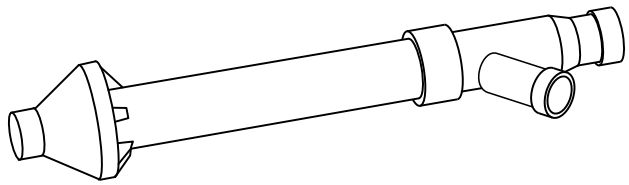

Concentric Vent Kit

A93086

A concentric vent kit allows vent and combustion-air pipes to terminate through a single exit in a roof or side wall. One pipe runs inside the other allowing venting through the inner pipe and combustion air to be drawn in through the outer pipe.

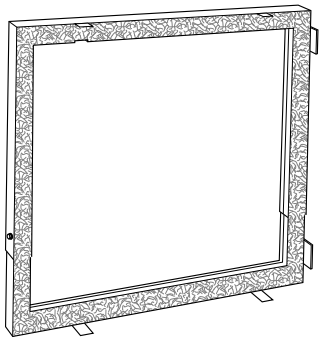

Downflow Subbase

A88202

One base fits all furnace sizes. The base is designed to be installed between the furnace and a combustible floor when no coil box is used or when a coil box other than a Carrier cased coil is used. It is CSA design certified for use with Carrier branded furnaces when installed in downflow applications.

MEDIA FILTER CABINET

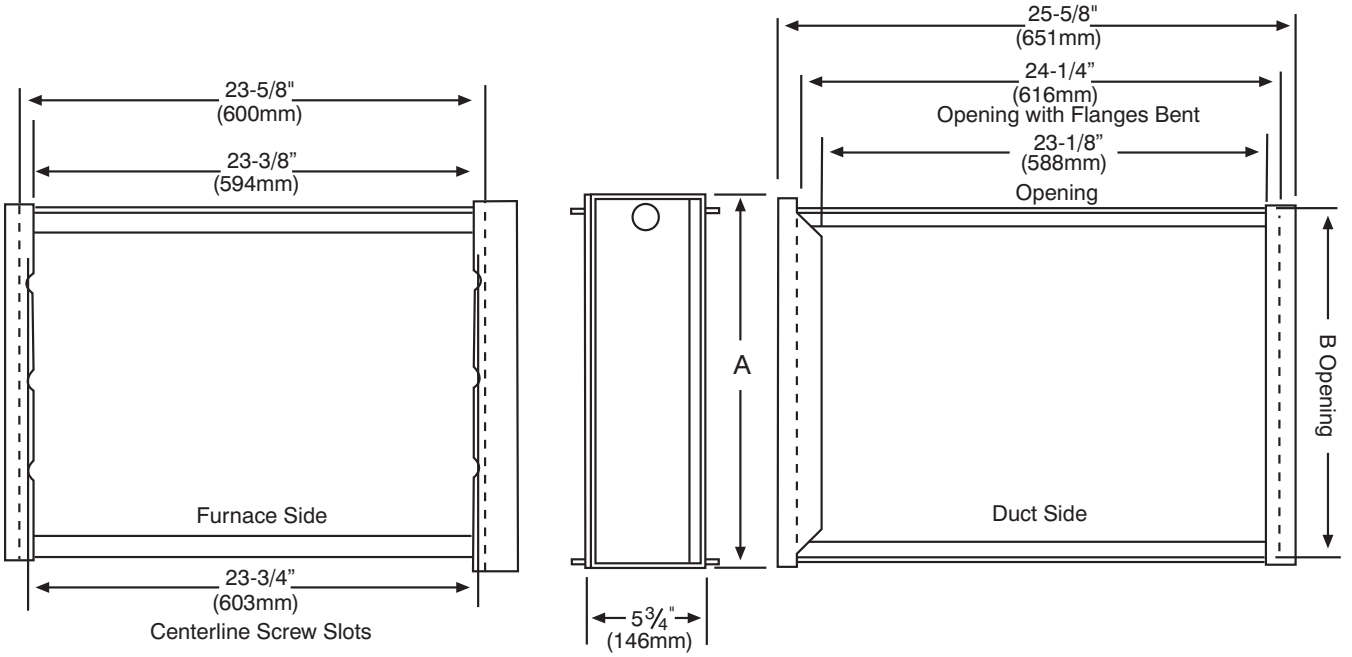

A11456A

DIMENSIONS (IN. / MM)			
MEDIA FILTER CABINET	**A**	**B**	**SHIPPED WITH SIZES**
16 (406.4)	17 (432.8)	16 (406.4)	040–08, 040–12, 060–08, 060–12, 080–12, 080–16
20 (508.0)	21 (533.4)	20 (508)	080–20, 100–16, 100–20
24 (609.6)	25 (635.0)	24 (609.6)	120–20, 140–20

TYPICAL WIRING SCHEMATIC

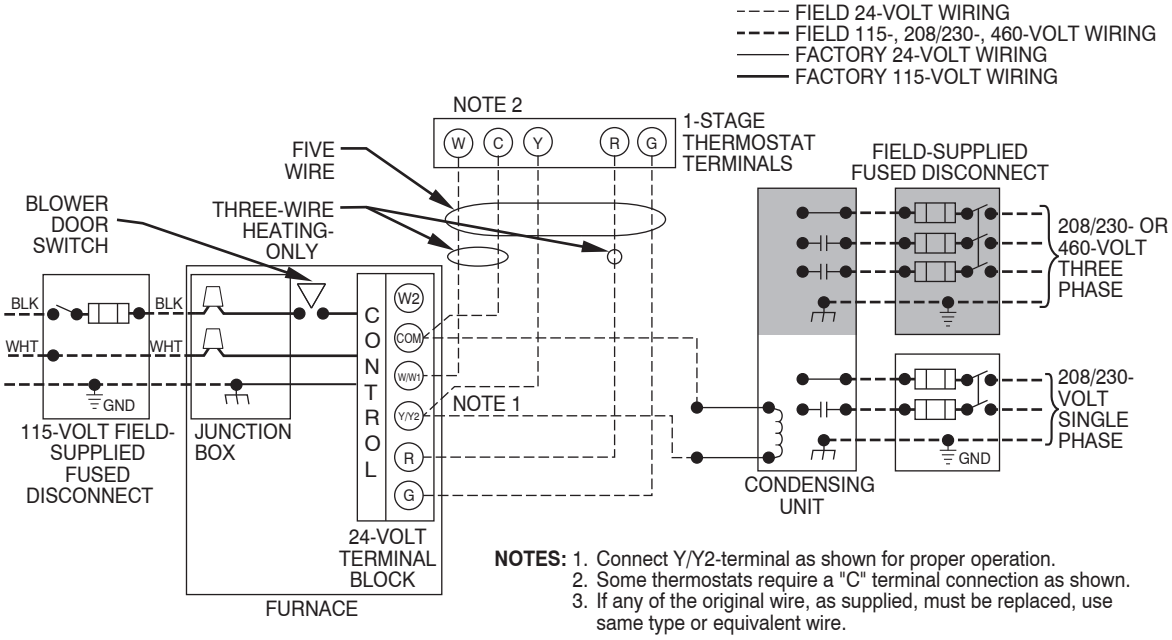

NOTES: 1. Connect Y/Y2-terminal as shown for proper operation.
2. Some thermostats require a "C" terminal connection as shown.
3. If any of the original wire, as supplied, must be replaced, use same type or equivalent wire.

A11401

DIMENSIONAL DRAWING

FURNACE SIZE (MODELS)	A (CABINET WIDTH)		B (OUTLET WIDTH)		C (BOTTOM INLET WIDTH)		D		SHIPPING WEIGHT	
(59MN7)	Inches	mm	Inches	mm	Inches	mm	Inches	mm	LBS	KG
060-14	17 1/2	445	15 7/8	403	16	406	8 3/4	222	154.0	69.3
080-14									164.0	73.8
100-20	21	533	19 3/8	492	19 1/2	495	10 1/2	267	178.5	80.3
120-22	24 1/2	622	22 7/8	581	23	584	12 1/4	311	202.5	91.1

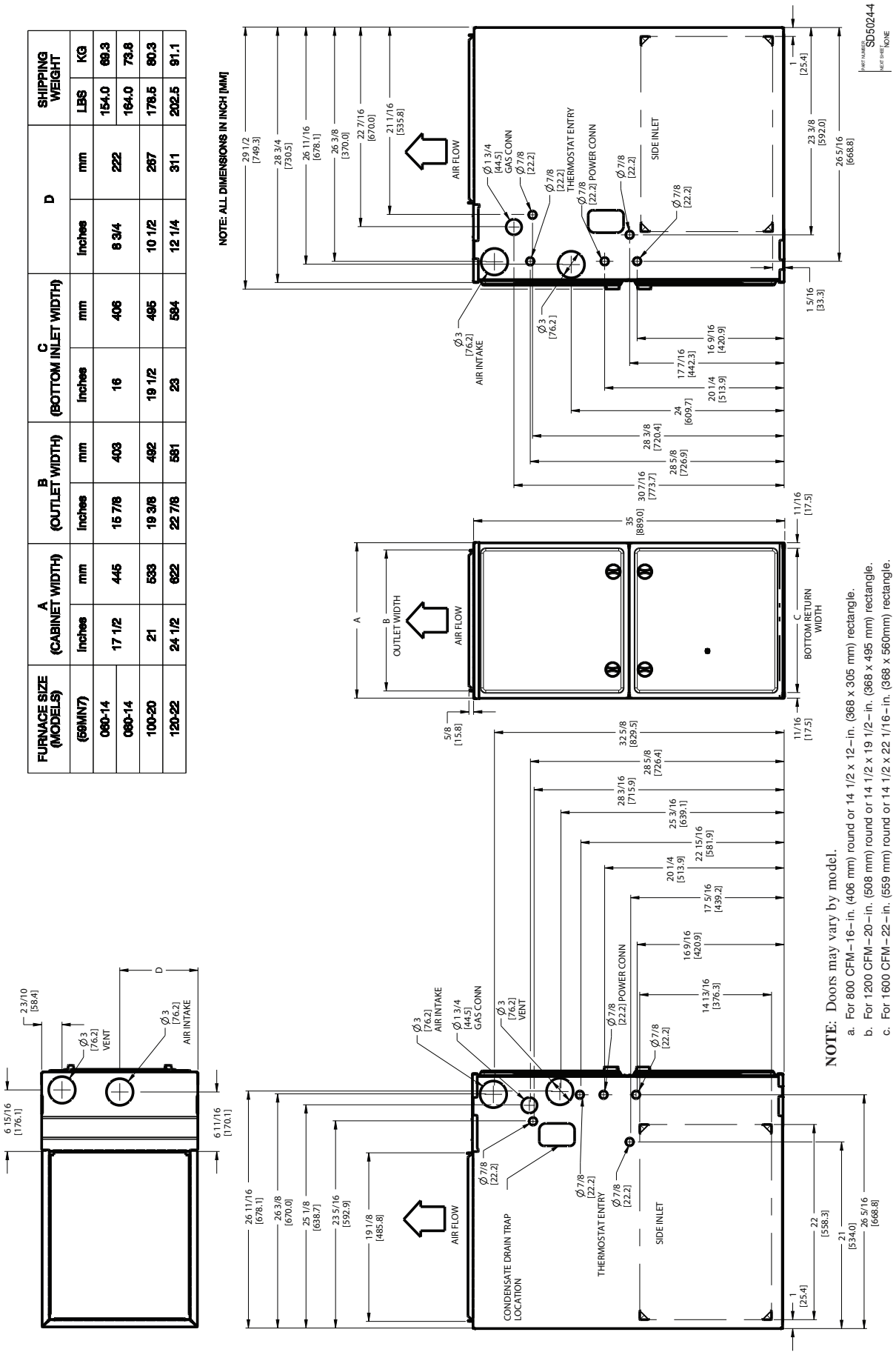

NOTE: Doors may vary by model.

a. For 800 CFM–16– in. (406 mm) round or 14 1/2 x 12– in. (368 x 305 mm) rectangle.

b. For 1200 CFM–20– in. (508 mm) round or 14 1/2 x 19 1/2– in. (368 x 495 mm) rectangle.

c. For 1600 CFM–22– in. (559 mm) round or 14 1/2 x 22 1/16– in. (368 x 560mm) rectangle.

d. For airflow requirements above 1800 CFM, see Air Delivery table in these installation instructions for specific use of single side inlets. The use of both side inlets, a combination of 1 side and the bottom, or the bottom only return air openings may be required for airflow requirements above 1800 CFM at 0.5 in. W.C. E.S.P.

A11518

GUIDE SPECIFICATIONS

General

System Description

Furnish a _____ 4-way multipoise gas-fired condensing furnace for use with natural gas or propane (factory-authorized conversion kit required for propane); furnish cold air return plenum; furnish external media cabinet for use with accessory media filter or standard filter.

Quality Assurance

Unit will be designed, tested and constructed to the current ANSI Z 21.47/CSA 2.3 design standard for gas-fired central furnaces.

Unit will be third party certified by CSA to the current ANSI Z 21.47/CSA 2.3 design standard for gas-fired central furnaces. Unit will carry the CSA Blue Star® and Blue Flame® labels. Unit efficiency testing will be performed per the current DOE test procedure as listed in the Federal Register.

Unit will be certified for capacity and efficiency and listed in the latest AHRI Consumer's Directory of Certified Efficiency Ratings.

Unit will carry the current Federal Trade Commission Energy Guide efficiency label.

Delivery, Storage, and Handling

Unit will be shipped as single package only and is stored and handled per unit manufacturer's recommendations.

Warranty (for inclusion by specifying engineer)

U.S. and Canada only. Warranty certificate available upon request.

Equipment

Blower Wheel and ECM Blower Motor

Galvanized blower wheel shall be centrifugal type, statically and dynamically balanced. Blower motor of ECM type shall be permanently lubricated with sealed ball bearings, of _____hp, and have infinitely variable speed from 300-1300 RPM operating only when 24-VAC motor inputs are provided. Blower motor shall be direct drive and soft mounted to the blower scroll to reduce vibration transmission.

Filters

Furnace shall have reusable-type filters. Filter shall be _____ in. (mm) X _____ in. (mm). An accessory highly efficient Media Filter is available as an option. _____ Media Filter.

Casing

Casing shall be of .030 in. thickness minimum, pre-painted galvanized steel.

Draft Inducer Motor

Draft inducer motor shall be variable-speed design.

Primary Heat Exchangers

Primary heat exchangers shall be 3-Pass corrosion- resistant aluminized steel of fold-and-crimp sectional design and applied operating under negative pressure.

Secondary Heat Exchangers

Secondary heat exchangers shall be of a stainless steel flow-through of fin-and-tube design and applied operating under negative pressure.

Controls

Controls shall include a micro-processor-based integrated electronic control board with at least 16 service troubleshooting codes displayed via diagnostic flashing LED light on the control, a self-test feature that checks all major functions of the furnace, and a replaceable automotive-type circuit protection fuse. Multiple operational settings available, including separate blower speeds for all modulating heating capacities, low cooling, high cooling and continuous fan. Continuous fan speed may be adjusted from the thermostat. Cooling airflow will be selectable between 325 and 400 CFM per ton of air conditioning. Features will also include temporary reduced airflow in the cooling mode for improved dehumidification when an Infinity Control or TP-PRH edge® is selected as the thermostat.

Operating Characteristics

Heating capacity shall be _____ Btuh input; _____ Btuh output capacity.

Fuel Gas Efficiency shall be _____ AFUE.

Air delivery shall be _____ cfm minimum at 0.50 in. W.C. external static pressure.

Dimensions shall be: depth_____in. (mm); width _____in. (mm); height_____in. (mm) (casing only). Height shall be _____in. (mm) with A/C coil and _____in. (mm) overall with plenum.

Electrical Requirements

Electrical supply shall be 115 volts, 60 Hz, single-phase (nominal). Minimum wire size shall be _____AWG; maximum fuse size of HACR-type designated circuit breaker shall be _____ amps.

Special Features

Refer to section of the product data identifying accessories and descriptions for specific features and available enhancements.

Copyright 2011 Carrier Corp. • 7310 W. Morris St. • Indianapolis, IN 46231
Printed in U.S.A. Edition Date: 10/11 **Catalog No: 59MN7A–02PD**

Manufacturer reserves the right to change, at any time, specifications and designs without notice and without obligations.
Replaces: 59MN7A–01PD