619R*F
Floor Console Ductless Split System
Sizes 09 to 12

bryant®
Heating & Cooling Systems

Installation Instructions

Puron
the environmentally sound refrigerant

NOTE: Read the entire instruction manual before starting the installation.

TABLE OF CONTENTS

PAGE

SAFETY CONSIDERATIONS..... 2
SYSTEM REQUIREMENTS 2
MODEL NUMBER NOMENCLATURE..... 3
PRECAUTIONS 4
INSTALLATION INFORMATION 5
ACCESSORIES 6
INSPECTING AND HANDLING THE UNIT 7
INDOOR UNIT INSTALLATION 7
OUTDOOR UNIT INSTALLATION 8
INSTALL THE CONNECTING PIPE 9
CONNECT THE DRAIN PIPE 12
WIRING 13
TEST OPERATION 14

SAFETY CONSIDERATIONS

Installing, starting up, and servicing air-conditioning equipment can be hazardous due to system pressures, electrical components, and equipment location (roofs, elevated structures, etc.).

Only trained, qualified installers and service mechanics should install, start-up, and service this equipment.

Untrained personnel can perform basic maintenance functions such as cleaning coils. All other operations should be performed by trained service personnel.

When working on the equipment, observe precautions in the literature and on tags, stickers, and labels attached to the equipment.

Follow all safety codes. Wear safety glasses and work gloves. Keep quenching cloth and fire extinguisher nearby when brazing. Use care in handling, rigging, and setting bulky equipment.

Read these instructions thoroughly and follow all warnings or cautions included in literature and attached to the unit. Consult local building codes and National Electrical Code (NEC) for special requirements. Recognize safety information. This is the safety-alert symbol ⚠. When you see this symbol on the unit and in instructions or manuals, be alert to the potential for personal injury.Understand these signal words: DANGER, WARNING, and CAUTION. These words are used with the safety-alert symbol. DANGER identifies the most serious hazards which **will** result in severe personal injury or death. WARNING signifies hazards which **could** result in personal injury or death. CAUTION is used to identify unsafe practices which **may** result in minor personal injury or product and property damage. NOTE is used to highlight suggestions which **will** result in enhanced installation, reliability, or operation.

⚠ WARNING

ELECTRICAL SHOCK HAZARD

Failure to follow this warning could result in personal injury or death.

Before installing, modifying, or servicing system, main electrical disconnect switch must be in the OFF position. There may be more than 1 disconnect switch. Lock out and tag switch with a suitable warning label.

⚠ WARNING

EXPLOSION HAZARD

Failure to follow this warning could result in death, serious personal injury, and/or property damage.

Never use air or gases containing oxygen for leak testing or operating refrigerant compressors. Pressurized mixtures of air or gases containing oxygen can lead to an explosion.

⚠ CAUTION

EQUIPMENT DAMAGE HAZARD

Failure to follow this caution may result in equipment damage or improper operation.

Do not bury more than 36 in. (914 mm) of refrigerant pipe in the ground. If any section of pipe is buried, there must be a 6 in. (152 mm) vertical rise to the valve connections on the outdoor units. If more than the recommended length is buried, refrigerant may migrate to the cooler buried section during extended periods of system shutdown. This causes refrigerant slugging and could possibly damage the compressor at start-up.

SYSTEM REQUIREMENTS

Allow sufficient space for airflow and servicing unit.

Recommended Connection Method for Power and Communication Wiring (To minimize communication wiring interference)

Power Wiring:

The main power is supplied to the outdoor unit. The field supplied connecting cable from the outdoor unit to indoor unit consists of three (3) wires and provides the power for the indoor unit. Two wires are high voltage AC power and one is a ground wire.

Consult your local building codes and the NEC (National Electrical Code) or CEC (Canadian Electrical Code) for special requirements.

All wires must be sized per NEC or CEC and local codes. Use Electrical Data table MCA (minimum circuit amps) and MOCP (maximum over current protection) to correctly size the wires and the disconnect fuse or breakers respectively.

Per caution note, only copper conductors with a minimum 300 volt rating and 2/64-inch thick insulation must be used.

Communication Wiring:

A separate shielded copper conductor only, with a minimum 300 volt rating and 2/64-inch thick insulation, must be used as the communication wire from the outdoor unit to the indoor unit.

To minimize voltage drop of the control wire, use the following wire size and maximum lengths shown in the chart below:

Wire Size	Length ft (m)
18 AWG	50 (15)
16 AWG	50 (15) to 100 (30)

⚠ CAUTION

EQUIPMENT DAMAGE HAZARD

Failure to follow this caution may result in equipment damage or improper operation.

- Wires should be sized based on NEC and local codes.
- Use copper conductors only with a minimum 300 volt rating and 2/64 inch thick insulation.

- If used as MULTI unit, please refer to the Installation & operation manuals packed with outdoor unit.

Model Numbers

Unit Tons	Unit Btuh	Volt-Ph @ 60Hz	Indoor Model Number
0.75	9,000	208/230-1	619REQ009FBMA
1	12,000	208/230-1	619REQ012FBMA

Model number Nomenclature

619 R E Q 009 C B M A

Position 13 – A = All models

Position 12 – Series

Position 11 – Max # of fan coils connected to OU
B = 1:1
C=1:2
D=1:3
F=1:4
G=1:5

Position 10 - Indoor Fan Coil Unit Type
B = High-Wall
C = Cassette
D = Ducted
F = Console
G = Underceiling
H = High Wall Color Variation
R = Outdoor

Position 7, 8, 9 - System capacity in 1000 BTU/Hr
Example: 009 = 9000 BTU/Hr

Position 6 - Unit Type
C = Cooling only
Q = Heat Pump

Position 5 - Electrical characteristics
A = 115/I/60
E = 208-230/I/60

Position 4 - model letter

Positions 1 to 3 - Equipment type
619 = Indoor unit;
538 = Outdoor unit

1. PRECAUTIONS

- **Be sure to comply with the local, national and international laws and regulations.**
- **Read "PRECAUTIONS" carefully before installation.**
- **The following precautions include important safety items. Observe them and never forget.**
- **Keep this manual with the owner's manual in a handy place for future reference.**
- **Installation must be performed in accordance with the requirement of NEC and CEC by authorized personnel only. （Applicable to the North American area only）**

The safety precautions listed here are divided into two categories. In either case, important safety information is listed which must be read carefully.

WARNING

Failure to observe a warning may result in death.

CAUTION

Failure to observe a caution may result in injury or damage to the equipment.

After completing the installation, make sure that the unit operates properly during the start-up operation. Please instruct the customer on how to operate the unit and keep it maintained.Also, inform customers that they should store this installation manual along with the owner's manual for future reference.

WARNING

Only trained and qualified service personnel should install, repair or service the equipment.

Improper installation, repair, and maintenance may result in electric shocks, short-circuit, leaks, fire or other damage to the equipment.

Install the unit according to this installation instructions found in this document.
If installation is defective, it will cause water leakage, electrical shock or fire.

When installing the unit in a small space, take measures to prevent refrigerant concentration from exceeding allowable safety limits in the event of refrigerant leakage.
Contact the place of purchase for more information. Excessive refrigerant in a closed space can lead to oxygen deficiency.

Use the attached accessories parts and specified parts for installation.
Failure to use the included parts will cause the set to fall, water leakage, electrical shock or fire.

Install the unit in a strong and firm location which is able to withstand the set' s weight.
If the installation site is not secure or the installation is not properly done, the set will drop and possibly cause injury or damage.

The appliance should not be installed in the laundry.

Before obtaining access to terminals, all supply circuits must be disconnected.

The appliance must be positioned so that the plug is accessible.

The enclosure of the appliance shall be marked with words, or with symbols, with the direction of the fluid flow.

For electrical work, follow the local national wiring standard, regulations and these installation instructions. An independent circuit and single outlet must be used.
If electrical circuit capacity is insufficient or a defect exists in the electrical work, it will cause an electrical shock or a fire.

Connect the specified cable tightly and then clamp the cable so that no external force can act on the terminal.
If connection or fixing is not correct , it will cause a heat build-up or fire at the connection.

Wiring routing must be properly arranged so the control board cover is fixed properly.
If the control board cover is not fixed properly, it will cause a heat build-up at the connection point of the terminal, which may result in a fire or an electrical shock.

If the supply cord is damaged, it must be replaced by the manufacturer or its service agent or similarly qualified person in order to avoid a hazard.

An all-pole disconnection switch with a contact separation of at least 3mm in all poles should be connected in the fixed wiring.

When performing the piping connection, make sure that air substances do not enter the refrigeration cycle.
If air substances enter the refrigeration cycle, it will reduce capacity, abnormal high pressure in the refrigeration cycle, explosion and injury.

Do not modify the length of the power supply cord or use an extension cord, and do not share the single outlet with other electrical appliances.
Failure to comply will cause fire or electrical shock.

Carry out the specified installation work after taking into account strong winds, typhoons or earthquakes.
Improper installation work may result in the equipment falling and causing accidents.

If the refrigerant leaks during installation, ventilate the area immediately.
Toxic gas may be produced if the refrigerant enters into the area and comes in contact with fire.

The temperature of refrigerant circuit is high, please keep the interconnection cable away from the copper tube.

After completing the installation work, ensure that the refrigerant does not leak.
Toxic gas may be produced if the refrigerant leaks into the room and comes into contact with a source of fire, such as a fan heater, stove or cooker.

CAUTION

Ground the air conditioner.
Do not connect the ground wire to gas or water pipes, lightning rod or a telephone ground wire.Incomplete grounding may result in electric shocks.

Be sure to install an earth leakage breaker.
Failure to install an earth leakage breaker may result in electric shocks.

Connect the outdoor unit wires , then connect the indoor unit wires.
You should not connect the air conditioner with the power source until wiring and piping the air conditioner is done.

While following the instructions in this installation manual, install drain piping in order to ensure proper drainage and insulate piping in order to prevent condensation.
Improper drain piping may result in water leakage and property damage.

Install the indoor and outdoor units, power supply wiring and connecting wires at least 3.28ft (1m) meter away from televisions or radios in order to prevent image interference or noise.
Depending on the radio waves, a distance of 3.28ft (1m) may not be sufficient enough to eliminate the noise.

The appliance is not intended for use by young children or infirm persons without supervision.

Don't install the air conditioner in the following locations:t

- Near petroleum facilities.
- Near coastal areas with any concentration of salty air.
- Near caustic gases, like sulfide, especially when near hot springs.
- The volt vibrates violently (in the factories).
- In buses or cabinets.
- In kitchens with large amounts of oil gas.
- Near a strong electromagnetic wave.
- Near inflammable materials or gas.
- Anywhere there is acid or alkaline liquid evaporating.
- Other hazardous conditions.

The appliance must be installed in accordance with national wiring regulations.

Do not operate your air conditioner in a wet room such as a bathroom or laundry room.

An all-pole disconnection device which has at least 3mm clearances in all poles, and has a leakage current that may exceed 10mA, and a residual current device (RCD) which has a rated residual operating current not to exceed 30mA, and a disconnection must be incorporated in the fixed wiring in accordance with the wiring rules.

2. INSTALLATION INFORMATION

- **To install properly, please read this "installation manual" first.**
- **The air conditioner must be installed by qualified persons.**
- **When installing the indoor unit or its tubing, please follow this manual closely.**
- **If the air conditioner is installed on a metal part of the building, it must be electrically insulated according to the relevant standards to electrical appliances.**
- **When all the installation work is finished, please turn on the power only after a thorough check.**

INSTALLATION ORDER

- Select the location.
- Install the indoor unit.
- Install the outdoor unit.
- Install the connecting pipe.
- Connect the drain pipe.
- Connect the wiring.
- Test operation.

3. ACCESSORIES

Please check whether the following fittings are in scope. If there are some spare fittings , please restore them carefully.

Table 3-1

	NAME	SHAPE	QUANTITY
Installation fittings	1.Hook		2
Remote controller and its Frame	2. Remote controller		1
	3. Frame		1
	4. Mounting screw(ST2.9×10-C-H)		2
	5. Alkaline dry batteries (AM4)		2
Others	6. Owner's manual	———	1
	7. Installation manual	———	1
	8 .Transfer connector(ϕ9.52-ϕ12.7) (Packed with the indoor unit ,used for multi-type models only) (NOTE: Pipe sizes differ from appliance to appliance.To meet different pipe size requirements, sometimes the pipe connections need the transfer connector installed on the outdoor unit .)	———	1 (on some models)
	9. Magnetic ring (Hitch on the communication cable and wind for two circles.)	———	1 (on some models)
	10. Red short connected wire (Applied to the W/L pin of outdoor unit terminal block be short-circuited.)	———	1 (on some models)

Cautions on remote controller installation:

- Never throw or beat the controller.
- Before installation, operate the remote controller to determine its location in a reception range.
- Keep the remote controller at least 3.28ft (1m) apart from the nearest TV set or stereo equipment. (it is necessary to prevent image disturbances or noise interferences.)
- Do not install the remote controller in a place exposed to direct sunlight or close to a heating source, such as a stove.
- Note that the positive and negative poles are right positions when loading batteries.
- This manual is subject to changes due to technological improvement without further notices.

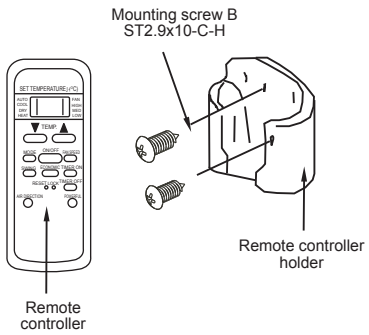

Fig.3-1

4. INSPECTING AND HANDLING THE UNIT

At delivery, the package should be checked and any damage should be reported immediately to the service agent.

When handling the unit, take into account the following:

1 **Fragile, handle the unit with care.**

Keep the unit upright in order to avoid compressor damage.

2 **Determine before hand the path which the unit is to be brought in.**

3 **Move this unit in the originally package is possible.**

4 **When lifting the unit , always use protectors to prevent belt damage and pay attention to the position of the unit's centre of gravity.**

5. INDOOR UNIT INSTALLATION

5.1 Installation place

The indoor unit should be installed in a location that meets the following requirements:

- There is enough room for installation and maintenance.

  (Refer to Fig.5-1 and Fig.5-2)
- The outlet and the inlet are not impeded, and the influence of external air is minimal.
- The air flow can reach throughout the room.
- The connecting pipe and drainpipe could be extracted out easily.
- There is no direct radiation from heaters.

CAUTION

Keep the indoor unit, the outdoor unit, the power supply wiring and transmission wiring at least 3.28ft (1m) away from televisions and radios. This is to prevent image interference and noise in those electrical appliances. (Noise may be generated depending on the conditions under which the electric wave is generated, even if a distance of 3.28ft (1m) is maintained.)

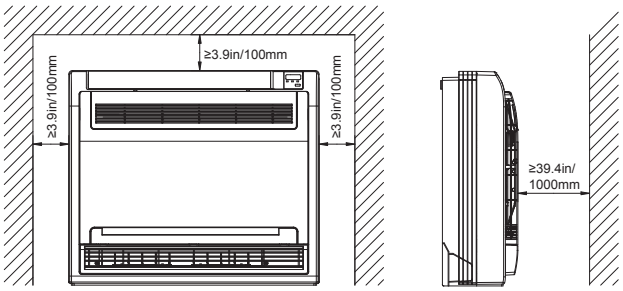

Fig.5-1

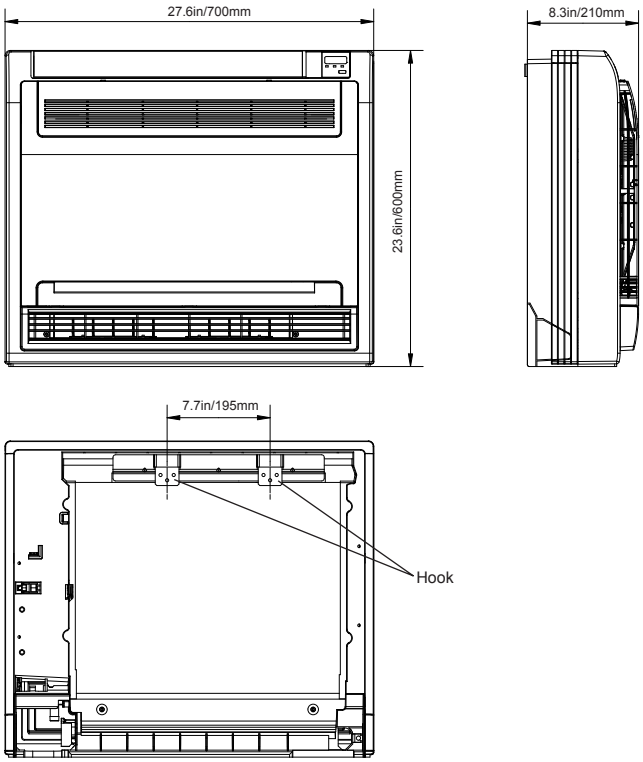

Fig.5-2

5.2 Install the main body

- Fix the hook with a tapping screw onto the wall.*(Refer to Fig.5-3)*

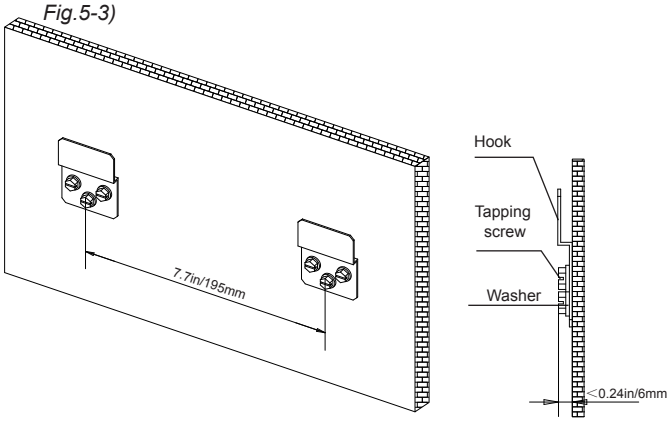

Fig.5-3

- Hang the indoor unit on the hook.

  (The bottom of body can touch with floor or suspended, however the body must install vertically.)

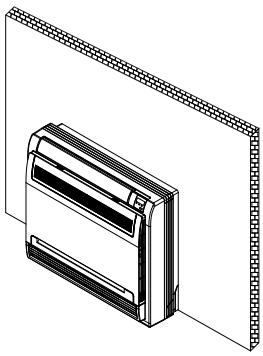

Fig.5-4

6. OUTDOOR UNIT INSTALLATION

6.1 Installation Place

■ **The outdoor unit should be installed in the location that meets the following requiements:**

- There is enough room for installation and maintenance.
- The air outlet and the air inlet are not impeded, and can not be reached by strong wind.
- The installation area must be a dry and well ventilated place.
- The support should be flat, horizontal and can with stand the weight of the outdoor unit. There should be no additional noise or vibration.
- The unit or the placement of the unit should not impede on the safety or disturb the comfort of others nearby.
- The connecting pipes and cables are easy to install.
- Determine the air outlet direction where the discharged air is not blocked.
- There is no danger of fire due to leakage of inflammable gas.
- The piping length between the outdoor unit and the indoor unit may not exceed the allowable piping length.
- In case the installation place is exposed to strong wind such as a seaside, make sure the fan operates properly by putting the unit lengthwise along the wall or use a dust shield.*(Refer to Fig.6-1)*
- If possible, do not install the unit where it is exposed to direct sunlight.
- If necessary, install a blind that does not interfere with the air flow.
- During the heating mode, the water drains off the outdoor unit. The condensation should be drained away from the unit through the drain hole to an appropriate location to avoid contact with people, plants, or animals.
- Select the position where the unit will not be subject to snow drifts, accumulation of leaves or other seasonal debris. If unavoidable, please cover it with a shelter.
- Locate the outdoor unit as close to the indoor unit as possible.
- If possible, please remove the obstacles nearby to prevent the unit's performance from being impeded by a lack of air circulation.
- The minimum distance between the outdoor unit and obstacles described in the installation chart does not mean that the same is applicable to the situation of an airtight room. Leave open two of the three directions.*(Refore to Fig.6-3)*

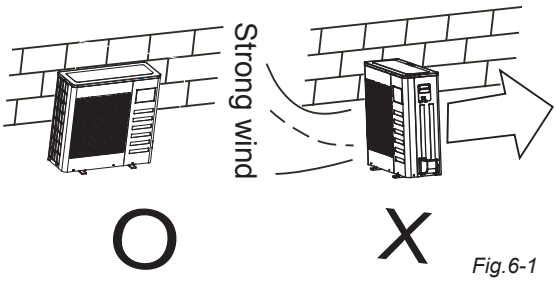

Fig.6-1

NOTE

All the pictures in this manual are for illustration purposes only. They may differ slightly from the air conditioner you purchased(depending on the model).

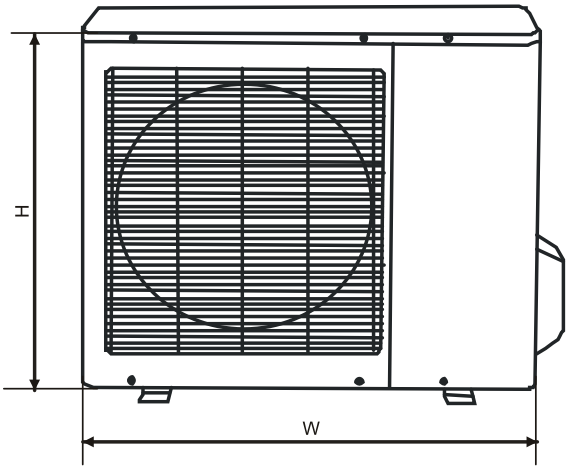

Fig.6-2

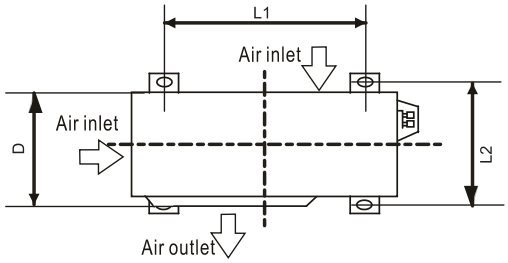

Fig.6-3

Table 6-1 Unit:in/mm

Model	W in (mm)	D in (mm)	H in (mm)	L1 in (mm)	L2 in (mm)	Operating Weight lb (kg)
9K/12K	32.0 (810)	12.2 (310)	22.0 (558)	20.9 (530)	11.4 (290)	82.5 (37.4)

(in=mm/25.4)

Refore to Fig.6-2～Fig.6-3

Side air outlet outdoor unit

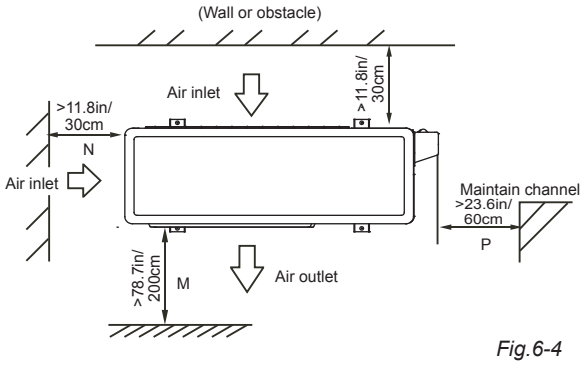

Fig.6-4

NOTE

All the pictures in this manual are for illustration purposes only. They may differ slightly from the air conditioner you purchased(depending on the model).

6.2 Moving and installation

- Since the gravity center of the unit is not at its physical center, be careful when lifting it with a sling.
- Never hold the inlet of the outdoor unit to prevent it from deforming.
- Do not touch the fan with hands or other objects.
- Do not lean the unit more than 45°, and do not lay it sidelong.
- Make a concrete foundation according to the specifications of the outdoor units.*(Refer to Fig.6-5)*
- Fasten the feet of this unit with bolts firmly to prevent it from collapsing in case of earthquake or strong wind.*(Refer to Fig.6-5)*

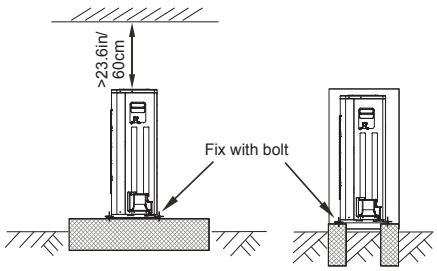

Fig.6-5

NOTE

All the pictures in this manual are for illustration purposes only. They may differ slightly from the air conditioner you purchased(depending on model).

7. INSTALL THE CONNECTING PIPE

Check whether the height drop between the indoor unit and outdoor unit, the length of refrigerant pipe, and the number of the bends meet the following requirements:

Table 7-1

Capacity(Btu/h)	9000~12000
The max height drop	16.4ft/5m
The length of refrigerant pipe	Less than 32.8ft/10m
The number of bends	Less than 5

7.1 The Procedure of Connecting Pipes

CAUTION

All field piping must be provided by a licensed refrigeration technician and must comply with the relevant local and national codes.
Do not let air, dust, or other impurities fall in the pipe system during the installation.
The connecting pipe should not be installed until the indoor and outdoor units have been fixed already.
Keep the connecting pipe dry, and do not let moisture in during installation.
Execute heat insulation work completely on both sides of the gas piping and the liquid piping. Otherwise, this can sometimes result in water leakage.

1. Drill a hole in the wall (suitable just for the size of the wall conduit), then set on the fittings such as the wall conduit and its cover.
2. Bind the connecting pipe and the cables together tightly with binding tapes.
   Pass the bound connecting pipe through the wall conduct from outside. Be careful of the pipe allocation to avoid damage to the tubing.
3. Connect the pipes. Refer to "How to Connect the pipes" for details.
4. Expel the air with a vacuum pump. Refer to "How to expel the air with a vacuum pump" for details.
5. Open the stop values of the outdoor unit to connect the refrigerant pipe to the indoor unit with the outdoor unit in fluent flow.
6. Check the leakage. Check all the joints with the leak detector or soap water.
7. Cover the joints of the connecting pipe with the soundproof / insulating sheath (fittings), and bind it well with tape to prevent leakage.

CAUTION

Ensure that the insulating materials cover all the exposed parts of the flare pipe joints and refrigerant pipe on the liquid-side and the gas-side. Ensure there is no gap between them.
Incomplete insulation may cause water condensation.

How to take indoor unit apart to connect the pipes

1 Open the front panel

- Slide the two stoppers on the left and right sides inword until they click .*(Refer to Fig.7-1)*

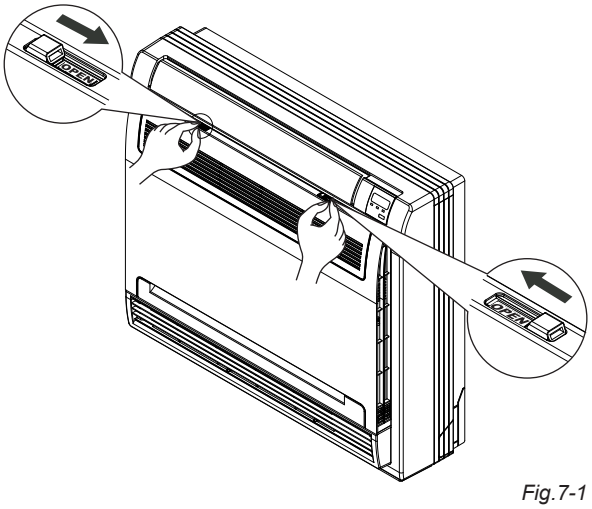

Fig.7-1

2 Remove the front panel.

- Remove the string.*(Refer to Fig.7-2)*
- Allowing the front panel to fall forward will enable you to remove it.

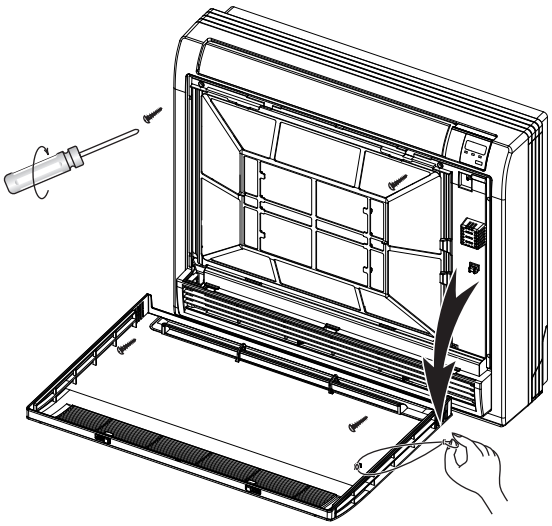

Fig.7-2

3 Remove the face plate .

- Remove the four screws.*(Refer to Fig.7-2)*
- Open the bottom of face plate to a 30 degree angle, then you can remove the top of the face plate.*(Refer to Fig.7-3)*

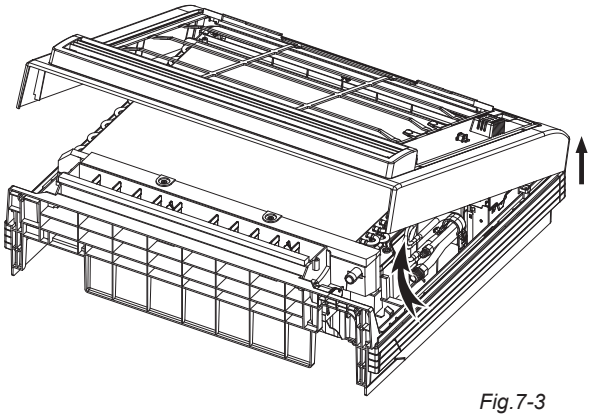

Fig.7-3

How to take outdoor unit apart to connect the pipes

Remove the water tray*(Refer to Fig.7-4)*

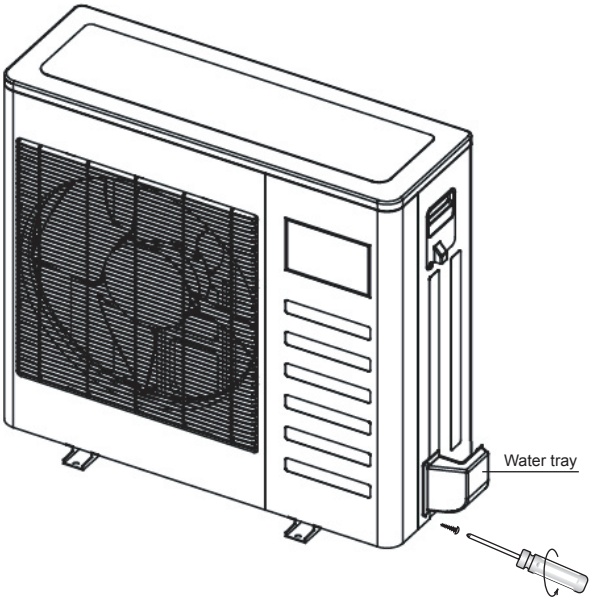

Fig.7-4

How to Connect the pipes

1 Flaring

- Cut a pipe with a pipe cutter. *(Refer to Fig.7-5)*

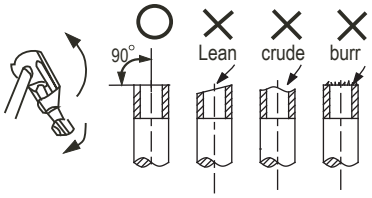

Fig.7-5

- Insert a flare nut into a pipe and flare the pipe.
- Refer to Table 7-2 for the dimension of flare nut spaces.

Table 7-2

Pipe gauge	Tightening torque	Flare dimensin A min (in/mm)	max	Flare shape
Ø1/4in/6.35	153～163 kgf.cm (15～16 N.m)	0.33/8.3	0.34/8.7	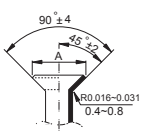
Ø3/8in/9.52	255～265 kgf.cm (25～26N.m)	0.47/12.0	0.48/12.4	
Ø1/2in/12.7	357～367 kgf.cm (35～36 N.m)	0.61/15.4	0.62/15.8	

2 Connect the indoor unit first, then the outdoor unit.

- Bend the tubing in the proper way.

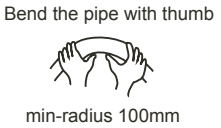

Fig.7-6

- The bending angle should not exceed 90°.
- The bending position is preferably in the middle of the bendable pipe. The larger the bending radius the better it is.
- Do not bend the pipe more than three times.
- When connecting the flare nut, coat the flare both inside and outside with either oil or ester oil and initially tighten by hand 3 or 4 turns before tighting firmly.

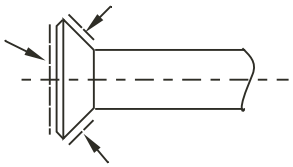

Fig.7-7

- Be sure to use both a spanner and torque wrench together when connecting or disconnecting pipes to /from the unit.

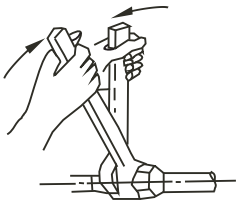

Fig.7-8

CAUTION

Too much torque will harm the bellmouthing and an inadequate amount of torque will cause leakage. Please determine the torque according to Table 4.

After the connecting work is finished, be sure to check that there is no gas leak.

■ How to expel the air with a vacuum pump

- **Stop valve operation introduction**

1. Opening stop valve

1. Remove the cap and turn the valve counter clock-wise with the hexagon wrench.
2. Turn it until the shaft stops.Do not apply excessive force to the stop valve. Doing so may break the valve body, as the valve is not a backseat type. Always use the special tool.
3. Make sure to tighten the cap securely.

2. Closing stop valve

1. Remove the cap and turn the valve clockwise with the hexagon wrench.
2. Securely tighten the valve until the shaft contacts the main bodyseal.

Make sure to tighten the cap securely.
For the tightening torque,refer to the table below.

Table 7-3

Tightening torque N•M (Turn clockwise to close)				
Stop Valve size	Shaft (valve body)		Cap (Valve lid)	Mainte-nance nut
Ø1/4in/6.35	5.4～6.6	Hexagonal wrench 0.16in/4 mm	13.5～16.5	11.5～13.9
Ø3/8in/9.52				
Ø1/2in/12.7	8.1～9.9		18～22	

CAUTION

Always use a charge hose for service port connection.

After tightening the cap, check that no refrigerant leaks exist.

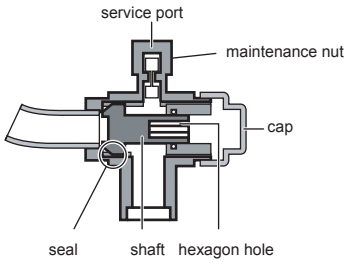

Fig.7-9

- **Using the vacuum pump**

1 Loosen and remove the maintenance nuts of stop valves A and B, and connect the charge hose of the manifold valve to the service port of stop valve A. (Be sure that stop valves A and B are both closed)

2 Connect the joint of the charge hose with the vacuum pump.

3 Open the Lo-lever of the manifold value completely.

4 Turn on the vacuum pump. At the beginning of pumping, loosen the maintenance nut of stop valve B a little to check whether the air comes in the (the sound of the pump changes, and the indicator of compound meter turns below zero). Then fasten the maintenace nut.

5 When the pumping has finished, close the Lo-lever of the manifold valve completely and turn off the vacuum pump.Continue pumping for 15 minutes or more and check that the compound meter indicates -2.5ftHg/-76cmHg(-1^{5}X10 Pa)

6 Loosen and remove the cap of stop valves A and B to open stop valve A and B completely, then fasten the cap.

7 Disassemble the charge hose from the service port of stop

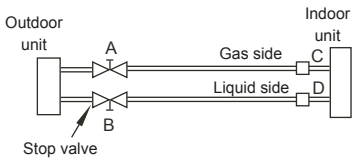

Fig.7-10

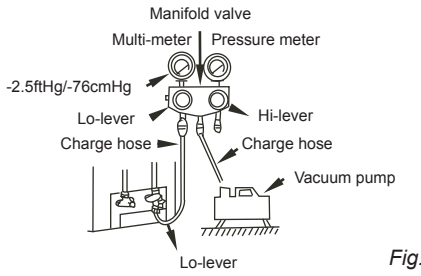

Fig.7-11

7.2 Additional Refrigerant Charge

CAUTION

Refrigerant cannot be charged until field wiring has been completed.

Refrigerant may only be charged after performing the leak test and the vacuum pumping.

When charging a system, care shall be taken that the maximum permissible charge is not exceeded, in view of the danger of liquid hammer.

Charging with an unsuitable substance may cause explosions and accidents, so always ensure that the appropriate refrigerant is charged.

Refrigerant containers shall be opened slowly.

Always use protective gloves and protect your eyes when charging refrigerant.

The outdoor unit is factory charged with refrigerant. Some systems require additional charging of refrigerant depending on pipe lengths. The additional refrigerant to be charged can be calculated from the following formule:

The standard pipe length will vary according to the requirements of your area. For example, in North America area, the standard pipe length is 25ft(7.5m). While in the other areas, the standard pipe length is 16ft(5m).

Inverter R410A:
Liquid side:φ1/4"(6.35) (Total pipe length - standard pipe length)x0.16oZ(15g)/m(ft)
Liquid side:φ3/8"(9.52) (Total pipe length - standard pipe length)x0.32oZ(30g)/m(ft)

NOTE

If a negative result is received for R from the formula at right, no refrigerant needs to be added nor removed.

8. CONNECT THE DRAIN PIPE

■ Install the drainpipe of the indoor unit

The outlet has PTI screw thread, Please use sealing materials and pipe sheath(fitting) when connecting PVC pipes.

CAUTION

- The drain pipe of indoor unit must be heat insulated, or it will condense dew, as well as the connections of the indoor unit.
- Hard PVC binder must be used for pipe connection, and make sure there is no leakage.
- With the connection part to the indoor unit, be sure not to impose pressure on the side of indoor unit pipes.
- When the declivity of the drain pipe downwards is over 1/100, there should not be any winding.
- The total length of the drain pipe when pulled out traversely shall not exceed 20m, when the pipe is over long, a prop stand must be installed to prevent winding.
- Refer to the figures on the right for the installation of the pipes.

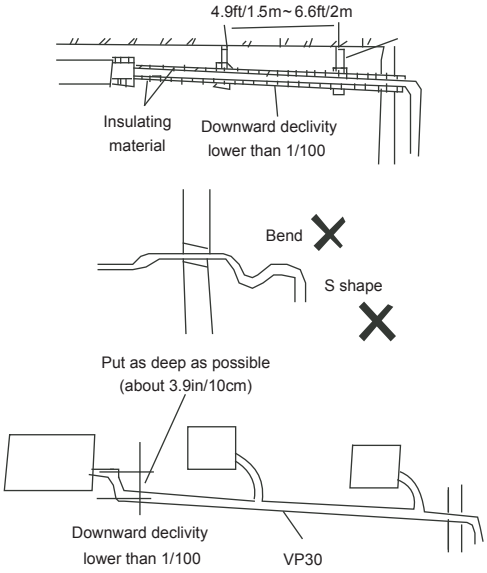

Fig. 8-1

■ Drainage test

- **Ensure the drainpipe is unhindered.**
- **The newly built housing should have this test preformed before paving the ceiling.**

■ Install the drain joint of the outdoor unit

Fit the seal into the drain joint, then insert the drain joint into the base pan hole of outdoor, rotate 90° to securely assemble them. Connect the drain joint with an extension drain hose (Locally purchased), in case of the condensation draining off the outdoor unit during the heating mode.*(Refer to Fig.8-2)*

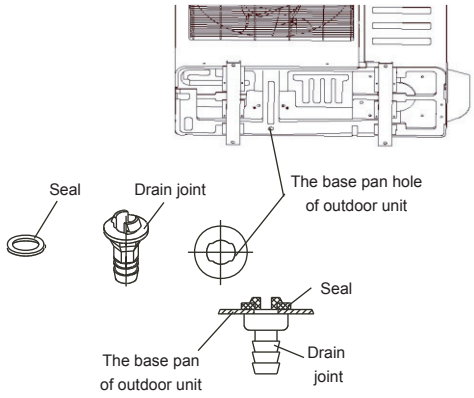

Fig.8-2

NOTE

All the pictures in this manual are for illustration purposes only. They may differ slightly from the air conditioner you purchased(depending on model).

9. WIRING

CAUTION

The appliance shall be installed in accordance with national wiring regualtions.

The air conditioner should use aseparate power supply with rated voltage.

The external power supply to the air conditioner should have a ground wiring, which is linked to the ground wiring of the indoor and outdoor unit.

The wiring work should be done by qualified persons according to circuit drawing.

An all-pole disconnection device which has at least 3mm separation distance in all pole and a residual current device(RCD)with the rating of above 10mA shall be incorporated in the fixed wiring according to the national rule.

Be sure to locate the power wiring and the signal wiring well to avoid cross-disturbance.

Do not turn on the power until you have checked the wiring carefully.

NOTE

Remark per EMC Directive 89/336/EEC
To prevent flicker impressions during the start of the compressor (technical process), the following installation conditions apply.

1 The power connection for the air conditioner has to be done at the main power distribution. The distribution must have low impedance, normally the required impedance reaches a 32 A fusing point.

2 No other equipment has to be connected with this power line.

3 For detailed installation acceptance please refer to your power supplier, for products like washing machines, air conditioners or electrical ovens.

4 For power details of the air conditioner refer to the rating plate of the product.

5 If you have any questions, contact your local dealer.

9.1 Connect the cable

■ Rotate the installation bearer of the sensing device to the other side, and then take off the cover of electrical box. (Take off the electrical box if the capacity is 18000btu/h and its using the network function.)
(Refer to Fig.9-1)

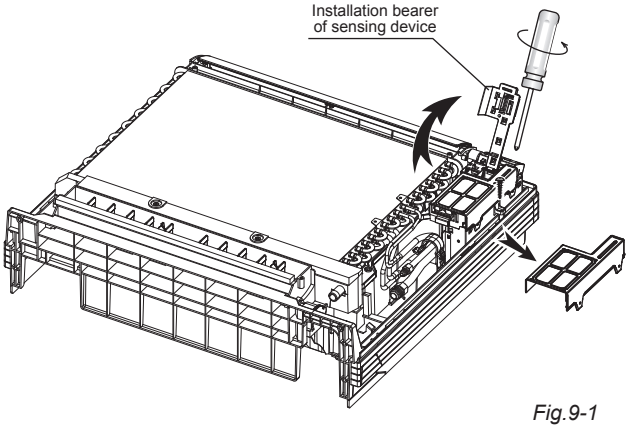

Fig.9-1

■ Dissemble the bolts from the cover.(If there isn't a cover on the outdoor unit, disassemble the bolts from the maintenance board, and pull it in the direction of the arrow to remove the protection board.)
(Refer to Fig.9-2)

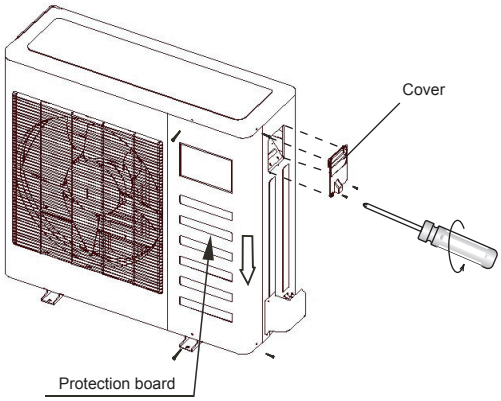

Fig.9-2

NOTE

All the pictures in this manual are for illustration purposes only. They may differ slightly from the air conditioner you purchased(depending on the model).

- Connect the connective cables to the terminals as identified with their respective matched numbers on the terminal block of the indoor and outdoor units.

- Re-install the Indoor unit and outdoor unit

9.2 The Specification of Power

(Refer to Table 9-2)

9.3 Wiring figure

(Refer to Fig9-4～Fig9-7)

9.4 Network address set

(Only 1800 BTU/h units have the network address set function.)

Every air conditioner in the network has one network address to distinguish it from the other. The address code of the air conditioner in LAN is set by code switches S1 & S2 on the Main Control Board of the indoor unit, and the set range is 0-63.

Table 9-1

Toggle switch set		Network address code
S1	S2	
		00~15
		16~31
		32~47
		48-63

10. TEST OPERATION

1 The test operation must be performed after the entire installation has been completed.

2 Please confirm the following points before the test operation:

- The indoor unit and outdoor unit are installed properly.
- Tubing and wiring are correctly completed.
- The refrigerant pipe system is leakage-checked.
- The drainage is unimpeded.
- The heating insulation works well.
- The ground wiring is connected correctly.
- The length of the tubing and the added stow capacity of the refrigerant have been recorded.
- The power voltage fits the rated voltage of the air conditioner.
- There is no obstacle at the outlet and inlet of the outdoor and indoor units.
- The gas-side and liquid-side stop valves are both opened.
- The air conditioner is pre-heated by turning on the power.

3 According to the user's requirement, install the remote controller frame where the remote controller's signal can best reach the indoor unit.

4 Test the operation.

- Set the air conditioner to the "COOLING" mode with the remote controller, and check the following points. If there is any malfunction, please resolve it according to the "Troubleshooting" chapter in the "Owner's Manual".

  - 1) The indoor unit
    a. Ensure the switch on the remote controller works well.
    b. Ensure the buttons on the remote controller works well.
    c. Ensure the air flow louver moves normally.
    d. Ensure the room temperature is adjusted well.
    e. Ensure the indicator lights normally.
    f. Ensure the temporary buttons works well.
    g. Ensure the drainage is normal.
    h. Ensure there is no vibration or abnormal noise during operation.
    I. Ensure the air conditioner heats well in the case of the HEATING/COOLING type.

  - 2) The outdoor unit
    a. Ensure there is no vibration or abnormal noise during operation.
    b. Ensure the generated wind, noise, or the unit's condensation have not negatively effected the surrounding environment
    c. Ensure none of the refrigerant has leaked.

CAUTION

A protection feature prevents the air conditioner from being activated for approximately 3 minutes when it is restarted immediately after shut off.

The Specification of Power

Table 9-2

TYPE		12000Btu/h (Cooling & Heating)	16000~18000Btu/h (Cooling & Heating)	
POWER	PHASE	1-PHASE	1-PHASE	
	FREQUENCY AND VOLT	208-230V~, 50Hz/60Hz	208-230V~, 50Hz/60Hz	
CIRCUIT BREAKER/FUSE (A)		20/16	20/16	
INDOOR UNIT POWER WIRING(sq in/mm²)		———	0.12x0.04/3x1.0	
INDOOR/OUTDOOR CONNECTING WIRING (sq in/mm²)	GROUND WIRING	0.06/1.5	0.1/2.5	
	OUTDOOR UNIT POWER WIRING	0.12x0.06/3X1.5	0.12x0.1/3x2.5	
	STRONG ELECTRIC SIGNAL	0.16x0.04/4X1.0	———	
	WEAK ELECTRIC SIGNAL	———	0.12x0.02/3x0.5	

CAUTION

The power supply included in the power supply mentioned above can be applied to the table.
Before obtaining access to terminals, all supply circuits must be disconnected.

Wiring figure

■ **Fig.9-4**

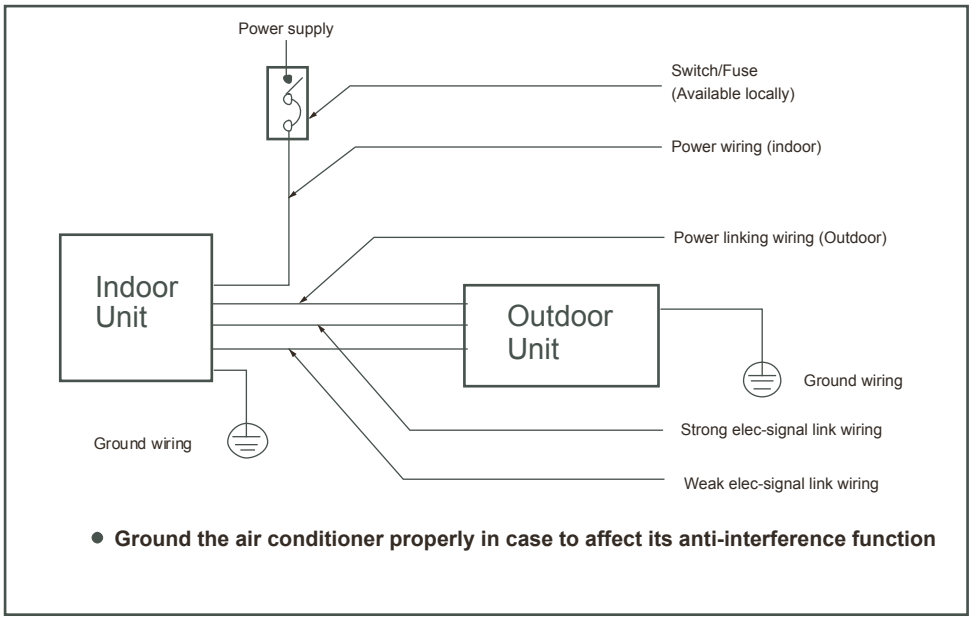

■ **Fig.9-5**

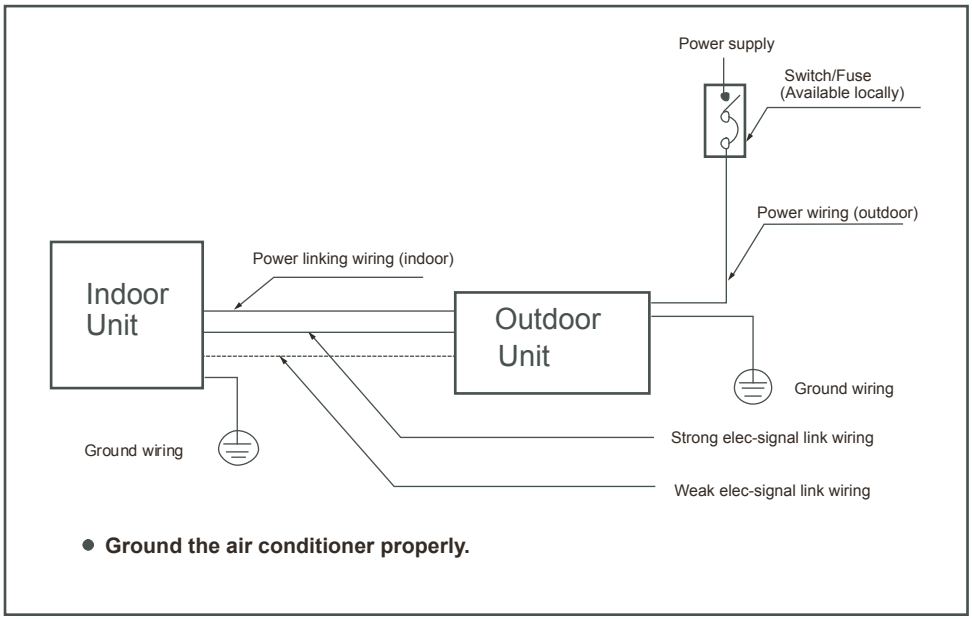

■ **Fig.10-6**

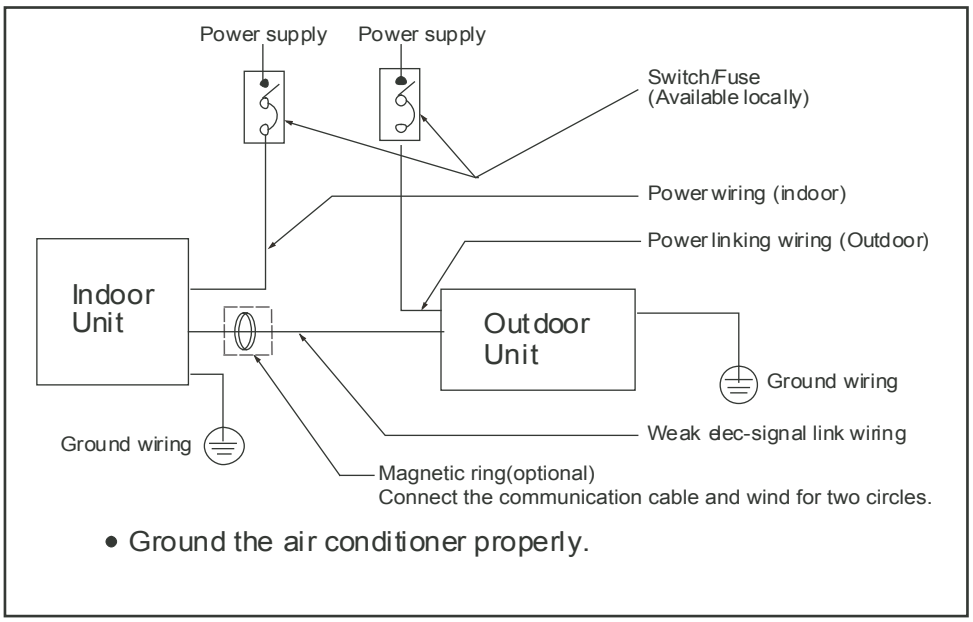

■ **Fig.9-7**

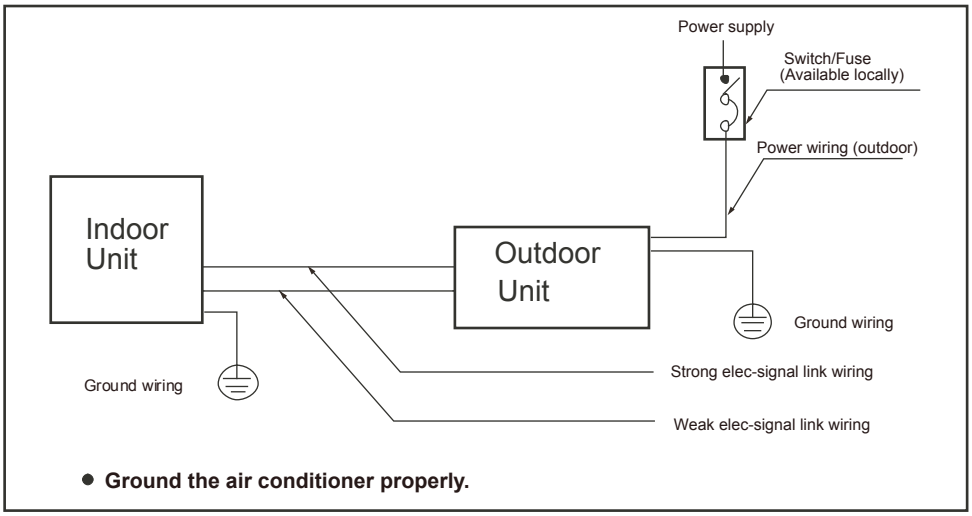

- **Ground the air conditioner properly.**

CAUTION

A disconnection device with a air gap contact separation in all active conductors should be incorporated in the fixed wiring according to the National Wiring Regulation.

When wiring, please choose the corresponding chart, or it may cause damage.The signs of the indoor terminal block in the some of following figures may be replaced by L N L1 N1.

Copyright 2014 CAC/BDP • 7310 W. Morris St. • Indianapolis, IN 46231
Edition Date: 11/14

Manufacturer reserves the right to change, at any time, specifications and designs without notice and without obligations.

Replaces: New