# B5H0V
# Variable Speed Heat Pump with R-454B Refrigerant 2 to 5 Nominal Tons

# PRODUCT DATA

Model B5H0V is another breakthrough product providing up to 9.5 HSPF2 heating efficiency and up to 20 SEER2 cooling efficiency. The variable speed capacity control results in strong heating capacity as the outdoor temperature drops resulting in less reliance on auxiliary heat. Lower speed operation is available when needed in cooling, for enhanced comfort and dehumidification.

Refer to the AHRI directory (www.ahridirectory.org) for the most up-to-date ratings information.

## Industry leading Features / Benefits

### Energy Efficiency
- Up to 20 SEER2, 11.5 EER2, 9.5 HSPF2
- Indoor air quality accessories available

### Sound
- Sound level as low as 54 dBA in low speed

### Comfort
- Variable speed compressor with capacity range from 20-100%
- Air cooled variable speed drive
  - Ion™ Black System Control required
  - Energy Tracking capability with the Ion™ Black System Control and latest software version
    (Energy Tracking has the ability to monitor and estimate the energy consumption of your Ion™ system.)

### Reliability
- Non-ozone depleting, low global warming potential R-454B refrigerant
- High pressure switch
- Suction and discharge pressure transducer
- Electronic expansion valve (EXV) for optimum heating performance
- Filter drier
- Internal compressor stator heat standard
- Balanced refrigeration system for maximum reliability

### Flexibility and Installation:
- Power-V™ Technology compatible
- 2 control wires to outdoor unit
- Minimum and maximum airflow adjustments
- Compressor heating capacity control
- Dual Fuel capable

### Durability
Protection Package:
- Solid, durable sheet metal construction
- Baked-on, complete outer coverage, powder paint

### Applications
- Heating mode operation down to -11°F (-23.9°C) outdoor ambient temperature.
- Cooling mode operation up to 125°F (51.7°C) outdoor ambient temperature.
- Long-line - up to 200 feet (61.0 m) equivalent length, up to 100 feet (30.5 m) condenser above evaporator, or up to 80 ft (24.4 m) evaporator above condenser (See Long Line Guide for more information.)
- Low ambient cooling down to 0°F (-17.8°C ) when enabled with the Ion™ Black System Control.

## MODEL NUMBER NOMENCLATURE

| B | 5 | H | 0 | V | 18 | A | K | A | A | A |
|---|---|---|---|---|---|---|---|---|---|---|
| **Brand**<br>**B** = Ion™<br>ICP Commercial | **Refrigerant**<br>**5**= R-454B | **Type**<br>**H** = AC | **SEER2**<br>**0** = 20 SEER2 | **OD Design Type**<br>**V** = Variable Speed | **Nominal Capacity**<br>**24** = 2 Tons<br>**36** = 3 Tons<br>**48** = 4 Tons<br>**60** = 5 Tons | **Feature**<br>A = Standard | **Voltage**<br>K = 208-230-1 | **Special Feature**<br>A = Standard | **Region**<br>A = Standard HP | **Major Series**<br>A = Initial Iteration |

Use of the AHRI Certified TM Mark indicates a manufacturer's participation in the program For verification of certification for individual products, go to www.ahridirectory.org.

## CATALOG ORDERING NUMBERS

| Size | Model Number |
|---|---|
| **24** | B5H0V24AKAAA |
| **36** | B5H0V36AKAAA |
| **48** | B5H0V48AKAAA |
| **60** | B5H0V60AKAAA |

## STANDARD FEATURES

| FEATURES | Unit Size | | | |
|---|---|---|---|---|
| | **24** | **36** | **48** | **60** |
| R-454B Refrigerant | X | X | X | X |
| Air-Cooling Variable Frequency Drive | X | X | X | X |
| Factory Provided, Field-Installed Filter Drier | X | X | X | X |
| Front-Seating Service Valves | X | X | X | X |
| In-unit Pressure and Temperature Protection | X | X | X | X |
| Suction and Discharge Pressure Transducers | X | X | X | X |
| High Pressure Switch | X | X | X | X |
| Compressor Stator Heat | X | X | X | X |
| Utility Interface Connections | X | X | X | X |
| Energy Tracking Capability | X | X | X | X |
| Sound Blanket | X | X | X | X |
| Outdoor Air Temperature Sensor | X | X | X | X |
| Long Line Capability | X | X | X | X |

X = Standard

## AHRI RATINGS

**NOTE**: Ratings contained in this document are subject to change at any time.

For AHRI ratings certificates, please refer to the AHRI directory www.ahridirectory.org
Additional ratings and system combinations can be accessed via the Ratings Database here: ICP Commercial Ratings

## MIN/MAX AIRFLOW TABLES

The indoor airflow delivered by this system varies significantly based on outdoor temperature, indoor unit combination, and system demand. The airflows on these tables are for duct design considerations.

Duct systems capable of these ranges will ensure the system will deliver full capacity at all outdoor temperatures. Minimum and maximum airflows can be adjusted from these numbers in the Ion™ Black System Control Heat Pump Setup screen.

| Size | Cooling - Comfort Mode | | Cooling - Efficiency Mode | |
|---|---|---|---|---|
| | Max Airflow | Min Airflow | Max Airflow | Min Airflow |
| 24 | 650 | 300 | 900 | 485 |
| 36 | 900 | 400 | 1200 | 525 |
| 48 | 1150 | 500 | 1350 | 750 |
| 60 | 1700 | 500 | 1950 | 780 |

| Size | Heating - Comfort Mode | | Heating - Efficiency Mode | |
|---|---|---|---|---|
| | Max Airflow | Min Airflow | Max Airflow | Min Airflow |
| 24 | 700 | 500 | 900 | 500 |
| 36 | 1000 | 550 | 1200 | 550 |
| 48 | 1450 | 800 | 1450 | 800 |
| 60 | 1750 | 700 | 1850 | 700 |

## PHYSICAL DATA

| UNIT SIZE | 24 | 36 | 48 | 60 |
|---|---|---|---|---|
| **COMPRESSOR TYPE** | Variable Speed Rotary | | | |
| **REFRIGERANT** | R-454B | | | |
| Charge lb* (kg) | 4.9 (2.2) | 6.7 (3.0) | 7.9 (3.6) | 8.2 (3.7) |
| Outdoor Htg Exp. Device | EXV | EXV | EXV | EXV |
| **COND FAN** | Forward Swept Propeller Type, Direct Drive | | | |
| Air Discharge | Vertical | | | |
| Maximum Air Qty (CFM) | 2570 | 4190 | 5250 | 5250 |
| Motor HP | 1/5 | 1/3 | 1/3 | 1/3 |
| Motor RPM | 200-1000 | 200-850 | 200-825 | 200-825 |
| **COND COIL** | | | | |
| Face Area (sq ft.) | 12.5 | 19.4 | 27.6 | 27.6 |
| Fins per In. | 20 | 20 | 20 | 20 |
| Rows | 1 | 1 | 1 | 1 |
| Circuits | 5 | 6 | 11 | 11 |
| **VALVE CONNECT. (In. ID)** | | | | |
| Vapor | 3/4 | 3/4 | 7/8 | 7/8 |
| Liquid | 3/8 | | | |
| **REFRIGERANT TUBES† (In. OD)** | | | | |
| Rated Vapor† | 3/4 | 7/8 | 7/8 | 1 - 1/8 |
| Max Rated Liquid Line‡ | 3/8 | | | |

*.For 15 ft. lineset
†.Units are rated with 25 ft (7.6 m) of lineset length. See Vapor Line Sizing and Cooling Capacity Loss table when using other sizes and lengths of lineset.
‡.See Liquid Line Sizing For Cooling Only Systems with R-454B Refrigerant tables.
**Note**: See unit Installation Instruction for proper installation.

## ELECTRICAL DATA

| UNIT SIZE | V-PH | OPER VOLTS* | | COMPR | | FAN | MCA | MAX FUSE† or CKT BRK AMPS | SCCR |
|---|---|---|---|---|---|---|---|---|---|
| | | MAX | MIN | MRC | RLA | FLA | | | |
| **24** | 208-230-1 | 253 | 197 | 25 | 11.7 | 0.70 | 19.4 | 25 | 5kA rms |
| **36** | | | | 25 | 17.5 | 0.88 | 22.9 | 30 | 5kA rms |
| **48** | | | | 35 | 22.6 | 0.88 | 30.6 | 40 | 5kA rms |
| **60** | | | | 35 | 27.2 | 0.88 | 36.9 | 50 | 5kA rms |

*. Permissible limits of the voltage range at which the unit will operate satisfactorily
†. Time-Delay fuse.
**FLA** - Full Load Amps, **MCA**-Minimum Circuit Amps, **MRC** - Maximum Rated Current, **RLA**-Rated Load Amps, **SCCR** - Short-Circuit Current Rating
**NOTE**: Control circuit is 24-V on all units and requires external power source. Copper wire must be used from service disconnect to unit.
All motors/compressors contain internal overload protection.

# REFRIGERANT PIPING LENGTH LIMITATIONS

## Maximum Line Lengths:

The maximum allowable total equivalent length for Heat Pumps varies depending on the vertical separation. See the tables below for allowable lengths depending on whether the outdoor unit is on the same level, above or below the outdoor unit.

**Maximum Line Lengths for Heat Pump Applications**

| | MAXIMUM ACTUAL LENGTH* ft (m) | MAXIMUM EQUIVALENT LENGTH† ft (m) | MAXIMUM VERTICAL SEPARATION ft (m) |
|---|---|---|---|
| Units on equal level | 200 (61.0) | 200 (61.0) | N/A |
| Outdoor unit ABOVE indoor unit | 200 (61.0) | 200 (61.0) | 100 (30.5) |
| Outdoor unit BELOW indoor unit | 200 (61.0) | 200 (61.0) | 80 (24.4) |

*. Maximum actual length not to exceed 200 ft (61 m)
†. Total equivalent length accounts for losses due to elbows or fitting. See the Long Line Guideline for details.

# LONG LINE APPLICATIONS

An application is considered Long Line when the refrigerant level in the system requires the use of accessories to maintain acceptable refrigerant management for systems reliability. B5H0V heat pumps do not require any additional accessories for long line applications. Defining a system as long line depends on the liquid line diameter, actual length of the tubing, and vertical separation between the indoor and outdoor units.

For heat pump systems, the chart below shows when an application is considered Long Line.

**Refrigerant Long Line Description ft (m)**

| Liquid Line Size | Units On Same Level ft (m) | Outdoor Above Indoor ft (m) | Outdoor Below Indoor ft (m) |
|---|---|---|---|
| 3/8 | 80 (24.4) | 80 (24.4) | 20 (6.1) vertical or 80 (24.4) total |

**NOTE:** See Long Line Guideline for details

# COOLING CAPACITY LOSS TABLE

| Nominal Size (Btuh) | Line OD (in) | Cooling Capacity Loss (%) Equivalent Length (ft) | | | | | | | | |
|---|---|---|---|---|---|---|---|---|---|---|
| | | 25 | 50 | 75 | 80 | 100 | 125 | 150 | 175 | 200 |
| **24000** | 5/8 | 0.7 | 2.0 | 3.4 | 2.3 | 3.3 | 4.6 | 5.8 | 6.9 | 8.0 |
| | **3/4** | 0.0 | 0.7 | 1.4 | 0.2 | 0.8 | 1.4 | 2.1 | 2.7 | 3.3 |
| **36000** | 5/8 | 1.6 | 3.8 | 5.9 | 6.3 | 7.8 | 9.7 | 11.4 | 13.0 | 14.6 |
| | 3/4 | 0.4 | 1.4 | 2.4 | 2.6 | 3.4 | 4.4 | 5.3 | 6.2 | 7.1 |
| | **7/8** | 0.0 | 0.7 | 1.4 | 1.5 | 2.0 | 2.7 | 3.3 | 3.9 | 4.5 |
| **48000** | 3/4 | 1.2 | 2.7 | 4.0 | 4.0 | 5.1 | 6.4 | 7.7 | 9.0 | 10.2 |
| | **7/8** | 0.5 | 1.3 | 2.0 | 1.9 | 2.5 | 3.2 | 4.0 | 4.7 | 5.5 |
| | 1 1/8 | 0.0 | — | — | — | — | — | — | — | — |
| **60000** | 3/4 | 1.8 | 3.9 | 5.8 | 6.2 | 7.7 | 9.5 | 11.2 | 12.9 | 14.5 |
| | 7/8 | 0.8 | 1.8 | 2.9 | 3.1 | 3.9 | 5.0 | 6.1 | 7.1 | 8.2 |
| | **1 1/8** | 0.0 | — | — | — | — | — | — | — | — |

Rated size Line OD and Rated Total Equivalent Length are in **BOLD**.

—= Applications in this range are disallowed

# ACCESSORIES

| KIT NUMBER | KIT NAME | 24 | 36 | 48 | 60 |
|---|---|---|---|---|---|
| NASA00601SJ | SOUND BLANKET (ACCUMULATOR) | X | | | |
| NASA00701SJ | SOUND BLANKET (ACCUMULATOR) | | X | | |
| NASA00401SJ | SOUND BLANKET (ACCUMULATOR) | | | S | S |
| NASA00201SF | SUPPORT FEET | X | X | X | X |
| NASA00106SS | SNOW STAND | X | X | X | X |

X = Accessory, S = Standard

# ACCESSORY USAGE GUIDELINE

| ACCESSORY | REQUIRED FOR LOW-AMBIENT COOLING APPLICATIONS (Below 55°F/12.8°C) | REQUIRED FOR LONG LINE APPLICATIONS (Over 80 ft/24.38 m) | REQUIRED FOR SEA COAST APPLICATIONS (Within 2 miles/3.22 km) |
|---|---|---|---|
| Compressor Stator Heat | Standard with Ion™ Black System Control | No | No |
| Evaporator Freeze Protection | Standard with Ion™ Black System Control | No | No |
| Low-Ambient Control | Standard with Ion™ Black System Control | No | No |
| Support Feet | Recommended | No | Recommended |
| Winter Start Control | Standard with Ion™ Black System Control | No | No |

## Accessory Description and Usage

**Snow Stand**

Coated wire rack which supports unit 18 in. (457.2 mm) above mounting pad to allow for drainage from unit base.

Usage Guideline:

Suggested in the following applications:

- Unit installations in heavy snowfall areas.
- Unit installations in snow drift locations.
- Unit installations in areas of prolonged subfreezing temperatures.
- All commercial installations.

**Sound Blanket (Accumulator)**

Wraparound sound reducing cover for the accumulator. Reduces possible transient tones that may resonate in the accumulator due to variability in system operation.

Usage Guideline:

Although all units are designed and tested to eliminate unpleasant tones, in the unlikely event a transient tone is experienced, this sound blanket can reduce the tone by up to 10 dB.

**Support Feet**

Four or five stick-on plastic feet that raise the unit 4 in. (101.6 mm) above the mounting pad. This allows sand, dirt, and other debris to be flushed from the unit base, minimizing corrosion.

Usage Guideline:

Suggested in the following applications:

Coastal installations.

Windy areas or where debris is normally circulating.

Rooftop installations.

For improved sound ratings.

Manufacturer reserves the right to change, at any time, specifications and designs without notice and without obligations.

## SOUND POWER LEVEL

| Unit Size | Typical Octave Band Spectrum (dB, without tone adjustment) | Min Cooling | Nominal* Cooling | Min Heating | Nominal* Heating |
|---|---|---|---|---|---|
| 24 | Speed | 900 | 4260 | 960 | 5100 |
| | 125 | 63 | 71 | 63 | 65 |
| | 250 | 55 | 66 | 54 | 63 |
| | 500 | 54 | 67 | 54 | 61 |
| | 1000 | 51 | 63 | 45 | 55 |
| | 2000 | 46 | 59 | 43 | 52 |
| | 4000 | 40 | 54 | 36 | 52 |
| | 8000 | 43 | 52 | 43 | 53 |
| | Sound Rating (dBA) | 56 | 68 | 56 | 71 |
| 36 | Speed | 900 | 4320 | 900 | 4680 |
| | 125 | 65 | 69 | 65 | 74 |
| | 250 | 55 | 69 | 55 | 67 |
| | 500 | 48 | 70 | 49 | 65 |
| | 1000 | 45 | 66 | 45 | 63 |
| | 2000 | 40 | 60 | 39 | 59 |
| | 4000 | 39 | 59 | 39 | 59 |
| | 8000 | 43 | 55 | 42 | 55 |
| | Sound Rating (dBA) | 55 | 72 | 54 | 72 |
| 48 | Speed | 900 | 3780 | 900 | 3780 |
| | 125 | 45 | 48 | 45 | 46 |
| | 250 | 38 | 55 | 40 | 55 |
| | 500 | 41 | 58 | 45 | 59 |
| | 1000 | 51 | 62 | 44 | 61 |
| | 2000 | 35 | 57 | 37 | 55 |
| | 4000 | 34 | 55 | 33 | 55 |
| | 8000 | 39 | 52 | 40 | 51 |
| | Sound Rating (dBA) | 64 | 72 | 56 | 73 |
| 60 | Speed | 900 | 4380 | 960 | 4440 |
| | 125 | 62 | 69 | 63 | 70 |
| | 250 | 62 | 72 | 56 | 71 |
| | 500 | 54 | 67 | 55 | 66 |
| | 1000 | 51 | 65 | 48 | 63 |
| | 2000 | 44 | 64 | 41 | 65 |
| | 4000 | 38 | 59 | 36 | 66 |
| | 8000 | 42 | 54 | 43 | 60 |
| | Sound Rating (dBA) | 58 | 72 | 55 | 73 |

*. Nominal condition data taken from maximum speed operation at 95°F in cooling and 47°F in heating
**NOTE**: Tested in compliance with AHRI 270-2015 but not listed with AHRI.

## CHARGING SUBCOOLING

| UNIT SIZE | MOMINAL SUBCOOLING* | REQUIRED SUBCOOLING °F (°C) - See System Control |
|---|---|---|
| 24 | 14 | Subcooling recommendation displayed on System Control in Charging Mode must be followed |
| 36 | 12 | |
| 48 | 5 | |
| 60 | 7 | |

*. Nominal subcooling targets for use as reference or in specific applications with 25 ft. (7.6 m) lineset, 95°F outdoor ambient, and 80°F/67°F indoor DB/WB.

# DIMENSIONS

| UNIT | SERIES | ELECTRICAL CHARACTERISTICS | | | | A | | B | | C | | D | | E | | F | | G | | H | | I | | J | | K | | OPERATING WEIGHT | | SHIPPING WEIGHT | | SHIPPING LENGTH / WIDTH (Sq.) | | SHIPPING HEIGHT | |
|---|---|---|---|---|---|---|---|---|---|---|---|---|---|---|---|---|---|---|---|---|---|---|---|---|---|---|---|---|---|---|---|---|---|---|---|
| | | 208-230-1-60 | 208/230-3-60 | 460-3-60 | 575-3-60 | INCH | MM | INCH | MM | INCH | MM | INCH | MM | INCH | MM | INCH | MM | INCH | MM | INCH | MM | INCH | MM | INCH | MM | INCH | MM | Lbs | Kgs | Lbs | Kgs | INCH | MM | INCH | MM |
| B5H0V24**AAA | A | Y | N | N | N | 23 1/8 | 587.3 | 35 1/2 | 902.0 | 3/4 | 19.1 | 4 7/16 | 113.0 | 18 1/16 | 459.0 | 7 13/16 | 197.9 | 1 1/8 | 28.2 | 3 13/16 | 97.4 | 10 1/4 | 260.4 | 12 | 304.8 | 18 | 457.2 | 140 | 63.5 | 158 | 71.7 | 26 1/8 | 664.0 | 39 13/16 | 1011.2 |
| B5H0V36**AAA | A | Y | N | N | N | 31 3/16 | 792.5 | 35 1/2 | 902.0 | 3/4 | 19.1 | 6 9/16 | 166.1 | 24 11/16 | 626.3 | 9 1/8 | 231.3 | 1 1/8 | 28.2 | 3 13/16 | 97.4 | 14 1/2 | 368.3 | 13 3/4 | 349.3 | 17 1/8 | 435.0 | 191 | 86.6 | 219 | 99.3 | 34 1/4 | 870.0 | 39 13/16 | 1011.2 |
| B5H0V48**AAA | A | Y | N | N | N | 35 | 889.0 | 43 13/16 | 1112.6 | 7/8 | 22.2 | 6 9/16 | 166.1 | 28 7/16 | 722.8 | 9 1/8 | 231.3 | 1 1/8 | 28.2 | 3 13/16 | 97.4 | 14 7/8 | 377.8 | 16 | 406.4 | 20 | 508.0 | 270 | 122.5 | 300 | 136.1 | 38 | 965.0 | 47 5/8 | 1209.4 |
| B5H0V60**AAA | A | Y | N | N | N | 35 | 889.0 | 43 13/16 | 1112.6 | 7/8 | 22.2 | 6 9/16 | 166.1 | 28 7/16 | 722.8 | 9 1/8 | 231.3 | 1 1/8 | 28.2 | 3 13/16 | 97.4 | 14 7/8 | 377.8 | 16 | 406.4 | 20 | 508.0 | 270 | 122.5 | 300 | 136.1 | 38 | 965.0 | 47 5/8 | 1209.4 |

Y=YES
N=NO

NOTES:

1. CENTER OF GRAVITY ⊕ .

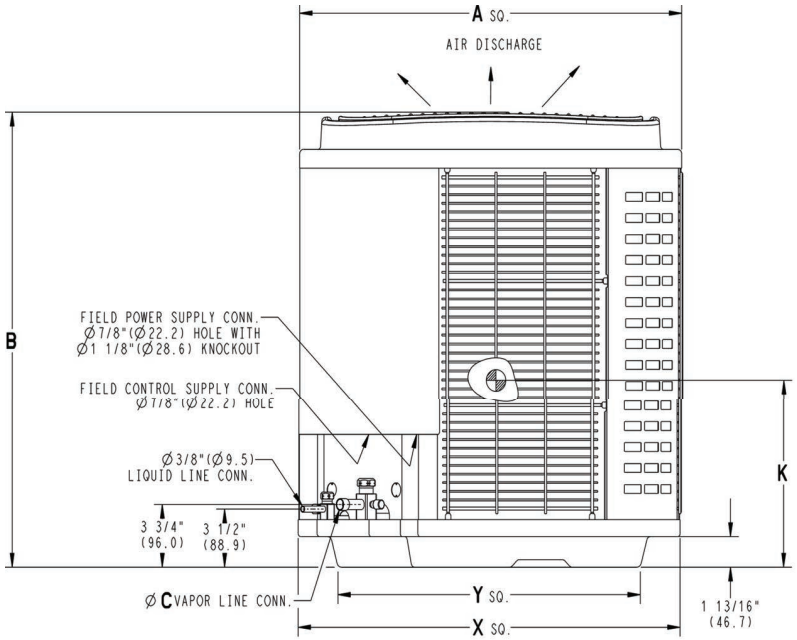


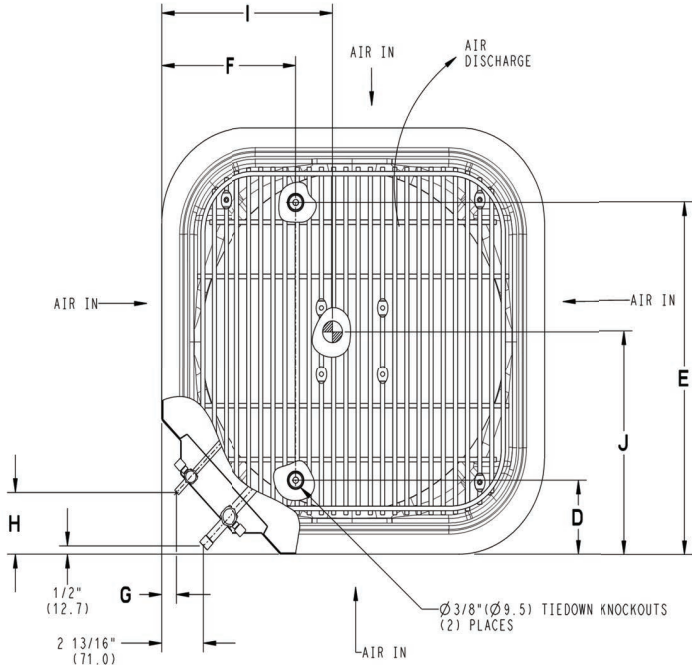


| UNIT SIZE | "X" MINIMUM GROUND MOUNTING PAD APPLICATION DIMENSIONS | | "Y" MINIMUM ROOF-TOP MOUNTING PAD APPLICATION DIMENSIONS | |
|---|---|---|---|---|
| 24 | 23 1/8 | 587.3 | 17 7/8 | 454.6 |
| - | 25 3/4 | 654.0 | 20 7/16 | 518.5 |
| 36 | 31 3/16 | 792.5 | 22 15/16 | 583.2 |
| 48,60 | 35 | 889.0 | 26 3/4 | 679.7 |

NOTE: ALL DIMENSIONS IN INCH (MM)

U.S. ECCN: Not Subject to Regulation (N.S.R.)

SD6130-4 REV. -

Manufacturer reserves the right to change, at any time, specifications and designs without notice and without obligations.

# CLEARANCES

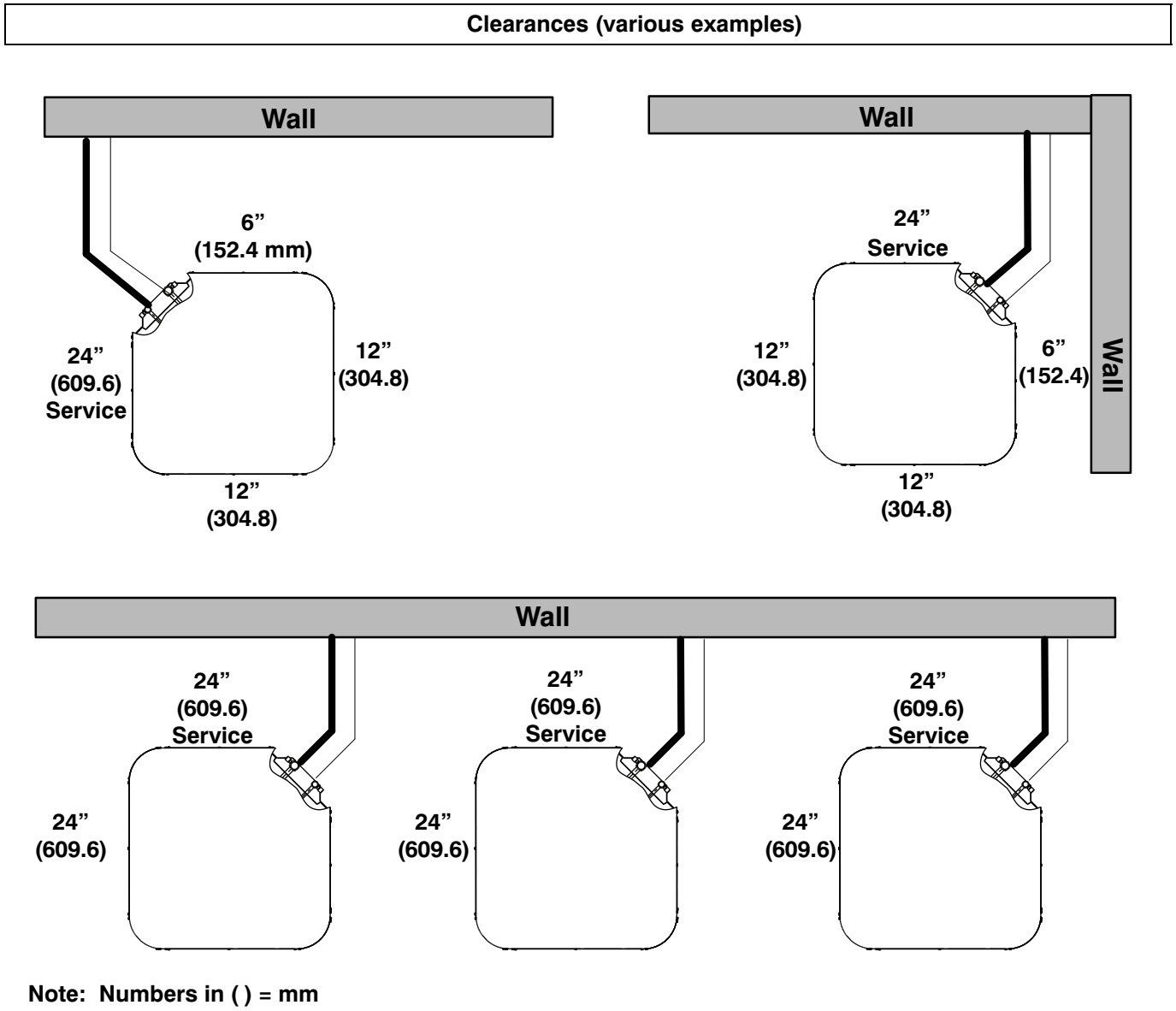


Note: Numbers in ( ) = mm

**IMPORTANT:** When installing multiple units in an alcove, roof well, or partially enclosed area, ensure there is adequate ventilation to prevent re-circulation of discharge air.

A07833



Manufacturer reserves the right to change, at any time, specifications and designs without notice and without obligations.

## BALANCE POINT WORKSHEET

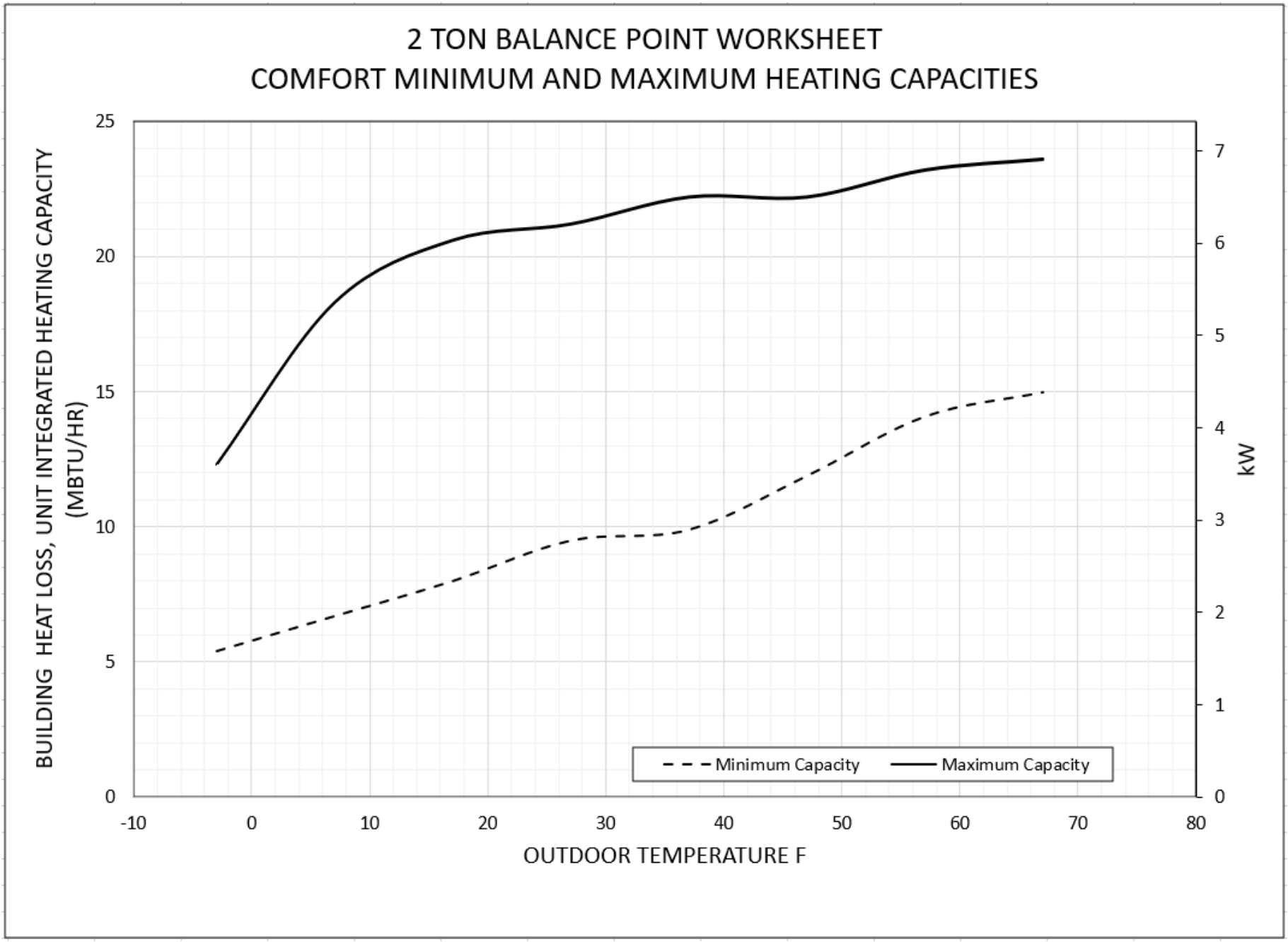




Manufacturer reserves the right to change, at any time, specifications and designs without notice and without obligations.

## BALANCE POINT WORKSHEET - Continued

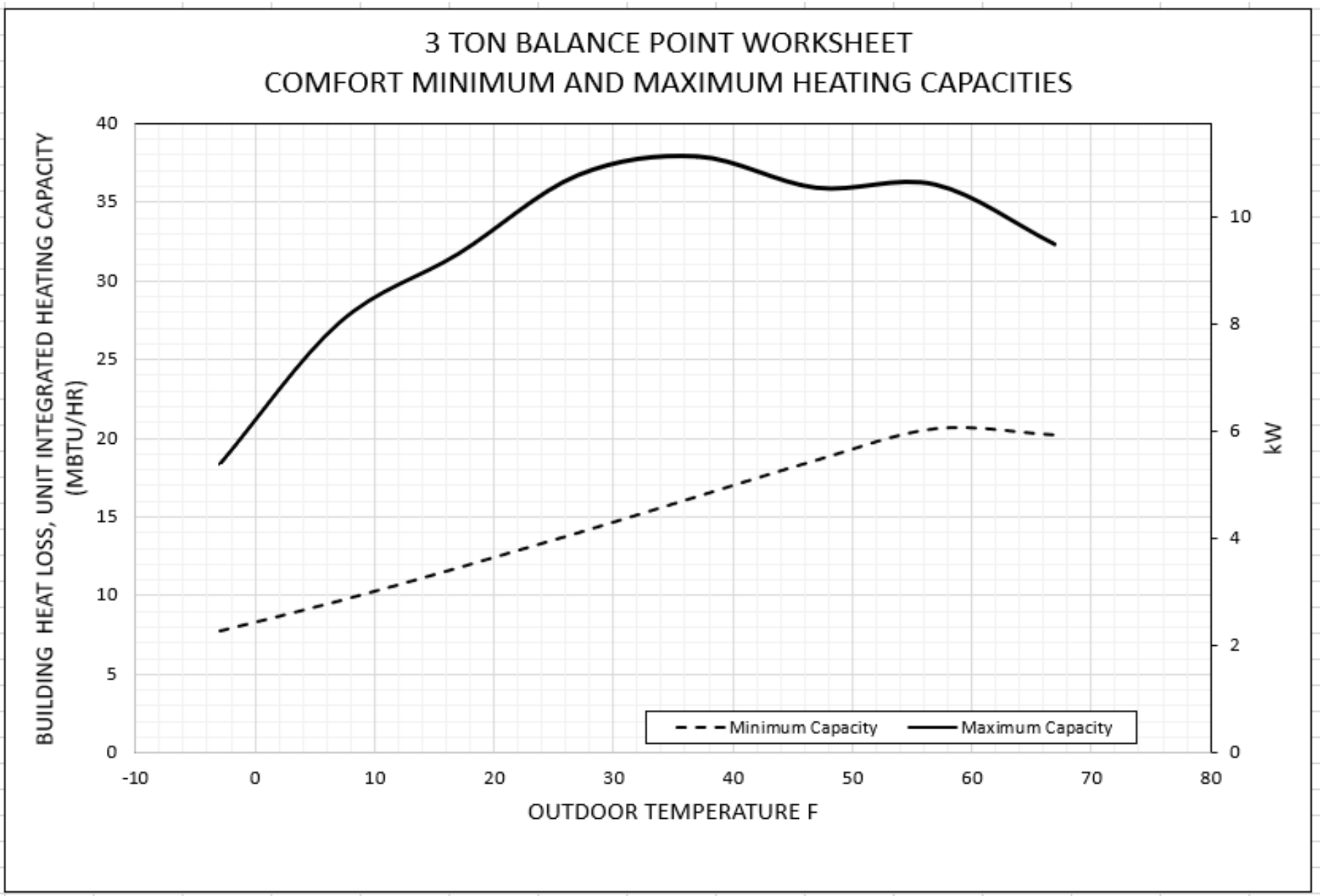


Manufacturer reserves the right to change, at any time, specifications and designs without notice and without obligations.

## BALANCE POINT WORKSHEET - Continued

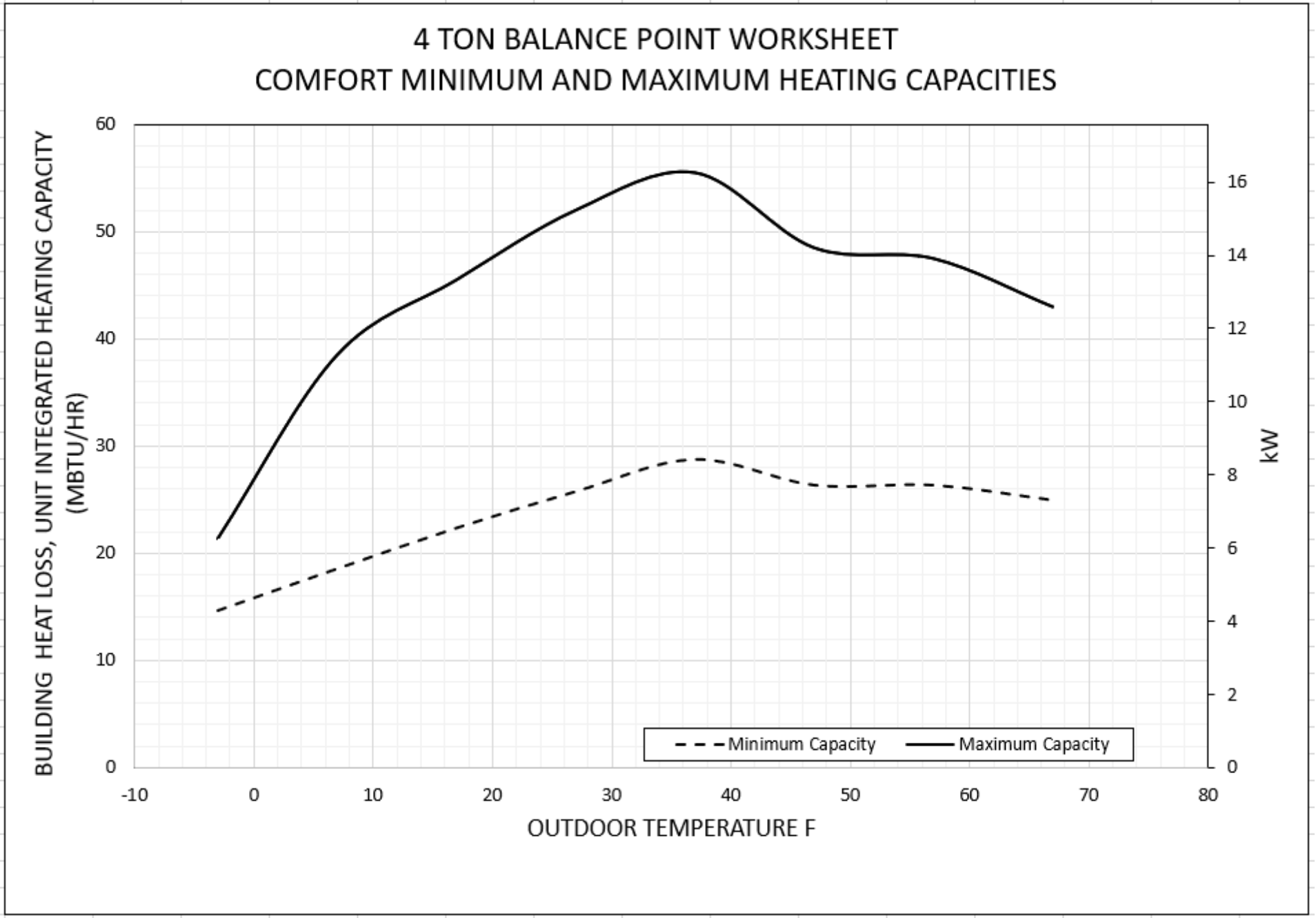

## BALANCE POINT WORKSHEET - Continued

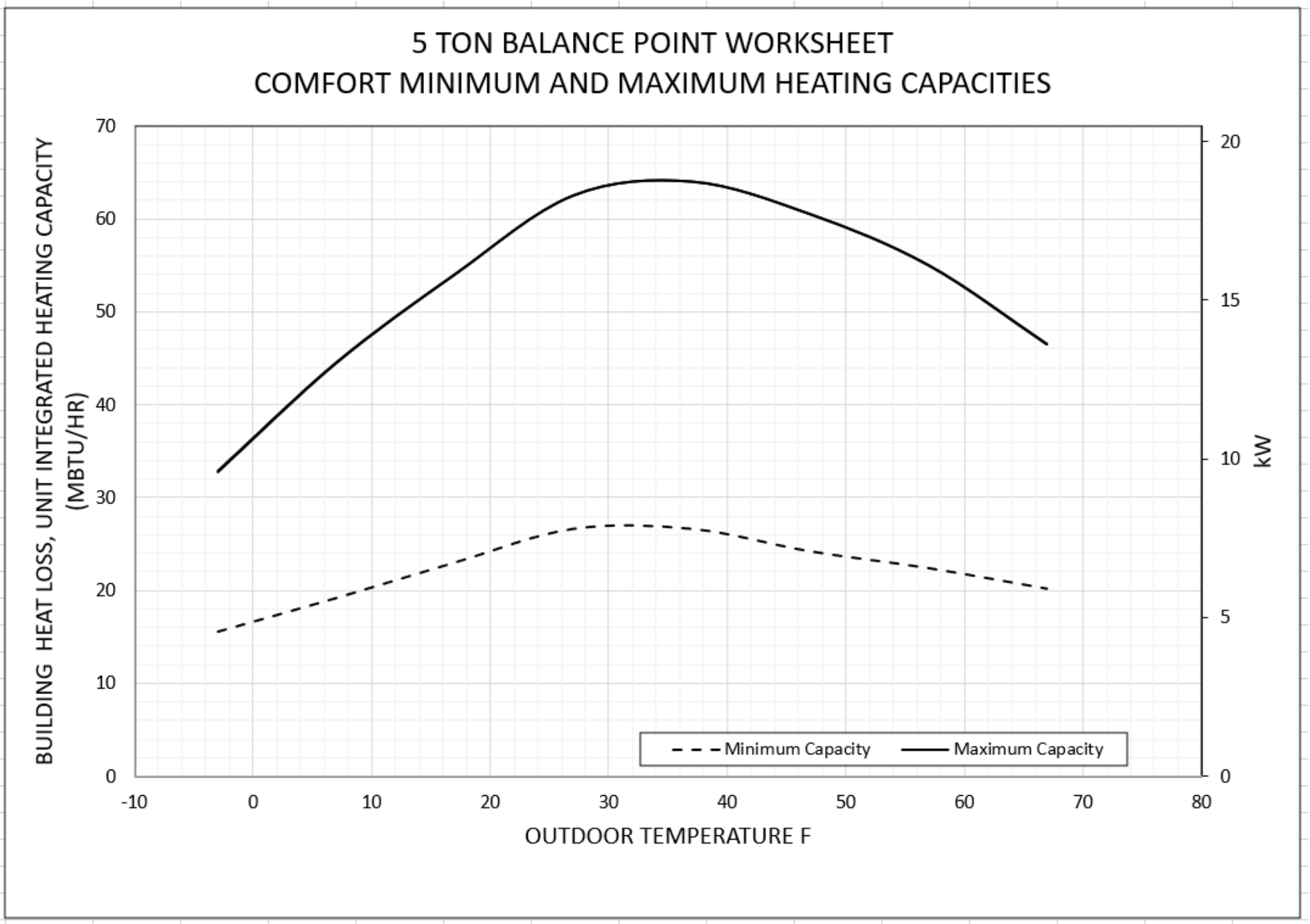


Manufacturer reserves the right to change, at any time, specifications and designs without notice and without obligations.

# Detailed Cooling Capacities# - Cooling Efficiency Mode

| EDB | EVAP AIR EWB | CONDENSER ENTERING AIR TEMPERATURES °F (°C) | | | | | | | | | | | | | | | | | | | | | | | | | | | |
|---|---|---|---|---|---|---|---|---|---|---|---|---|---|---|---|---|---|---|---|---|---|---|---|---|---|---|---|---|---|
| | | 65.0 (18.3) | | | | 75.0 (23.9) | | | | 85.0 (29.4) | | | | 95.0 (35.0) | | | | 105.0 (40.6) | | | | 115.0 (46.1) | | | | 125.0 (51.7) | | | |
| | | ID SCFM | Capacity MBtuh† | | Total Sys. KW** | ID SCFM | Capacity MBtuh† | | Total Sys. KW** | ID SCFM | Capacity MBtuh† | | Total Sys. KW** | ID SCFM | Capacity MBtuh† | | Total Sys. KW** | ID SCFM | Capacity MBtuh† | | Total Sys. KW** | ID SCFM | Capacity MBtuh† | | Total Sys. KW** | ID SCFM | Capacity MBtuh† | | Total Sys. KW** |
| | | | Total | Sens‡ | | | Total | Sens‡ | | | Total | Sens‡ | | | Total | Sens‡ | | | Total | Sens‡ | | | Total | Sens‡ | | | Total | Sens‡ | |
| **B5H0V24 Maximum Demand** | | | | | | | | | | | | | | | | | | | | | | | | | | | | | |
| 75 (23.9) | 72.0 (22.2) | 900 | 30 | 12.4 | 1.24 | 900 | 28.6 | 11.5 | 1.52 | 900 | 27.6 | 11.2 | 1.79 | 900 | 26 | 11 | 2.09 | 800 | 24.2 | 10.4 | 2.4 | 900 | 22.8 | 10.1 | 2.76 | 900 | 13.9 | 6.7 | 2.03 |
| | 67.0 (19.4) | | 27.2 | 17.1 | 1.26 | | 26 | 16.1 | 1.53 | | 25.2 | 15.8 | 1.81 | | 23.6 | 15.6 | 2.09 | | 22 | 14.6 | 2.39 | | 20.6 | 14.9 | 2.72 | | 12.5 | 11.1 | 2.02 |
| | 63.0 (17.2) | | 25.4 | 20.8 | 1.29 | | 24.2 | 19.6 | 1.54 | | 23.2 | 19.4 | 1.81 | | 22 | 19.2 | 2.10 | | 20.4 | 18 | 2.37 | | 19.3 | 18.5 | 2.72 | | 12.2 | 12.1 | 2.01 |
| | 57.0 (13.9) | | 23.8 | 23.8 | 1.29 | | 23 | 22.6 | 1.55 | | 22.2 | 22 | 1.81 | | 21.2 | 21.2 | 2.10 | | 19.5 | 19.5 | 2.37 | | 18.9 | 18.9 | 2.71 | | 12.2 | 12.1 | 2.02 |
| 80 (26.7) | 72.0 (22.2) | 900 | 29.8 | 17 | 1.24 | 900 | 28.4 | 16 | 1.51 | 900 | 27.4 | 15.8 | 1.78 | 900 | 26 | 15.6 | 2.10 | 800 | 24.2 | 14.6 | 2.41 | 900 | 22.6 | 14.8 | 2.75 | 900 | 13.7 | 11.2 | 2.01 |
| | 67.0 (19.4) | | 27.2 | 21.6 | 1.27 | | 26 | 20.6 | 1.53 | | 25.0 | 20.2 | 1.8 | | 23.6 | 19.2 | 2.15 | | 22 | 18.9 | 2.39 | | 21.6 | 17.6 | 2.82 | | 13.2 | 13 | 2.02 |
| | 63.0 (17.2) | | 25.6 | 25.2 | 1.28 | | 24.4 | 23.8 | 1.53 | | 24 | 22.2 | 1.81 | | 22.8 | 21.6 | 2.10 | | 21.2 | 20.4 | 2.39 | | 20.2 | 20.2 | 2.72 | | 13.2 | 13.1 | 2.02 |
| | 57.0 (13.9) | | 25.4 | 25.4 | 1.29 | | 24.4 | 24 | 1.54 | | 23.6 | 23.4 | 1.81 | | 22.6 | 22.6 | 2.10 | | 20.8 | 20.8 | 2.38 | | 20.2 | 20.2 | 2.73 | | 13.2 | 13.1 | 2.02 |
| **B5H0V24 Intermediate Demand** | | | | | | | | | | | | | | | | | | | | | | | | | | | | | |
| 75 (23.9) | 72.0 (22.2) | 635 | 15.1 | 6.4 | 0.5 | 635 | 14.6 | 6 | 0.57 | 550 | 13.8 | 5.6 | 0.69 | 620 | 16.3 | 6.9 | 1.16 | 620 | 18.2 | 7.9 | 1.76 | 620 | 16.9 | 7.4 | 1.99 | 620 | 13.2 | 5.8 | 1.86 |
| | 67.0 (19.4) | | 13.6 | 9.6 | 0.52 | | 13.1 | 9.1 | 0.59 | | 12.3 | 8.3 | 0.71 | | 14.6 | 10.1 | 1.16 | | 16.3 | 11.2 | 1.76 | | 15.2 | 10.9 | 1.97 | | 11.8 | 9 | 1.84 |
| | 63.0 (17.2) | | 12.7 | 12 | 0.53 | | 12.2 | 11.3 | 0.6 | | 11.4 | 10.3 | 0.72 | | 13.5 | 12.5 | 1.17 | | 15.2 | 13.9 | 1.76 | | 14.1 | 13.5 | 1.96 | | 11.1 | 10.6 | 1.83 |
| | 57.0 (13.9) | | 12.6 | 12.2 | 0.53 | | 12.2 | 11.4 | 0.61 | | 11.2 | 10.6 | 0.72 | | 13.3 | 13.1 | 1.17 | | 14.7 | 14.7 | 1.76 | | 13.7 | 13.7 | 1.95 | | 11 | 10.9 | 1.83 |
| 80 (26.7) | 72.0 (22.2) | 635 | 15 | 9.6 | 0.5 | 635 | 14.5 | 9.2 | 0.57 | 550 | 13.7 | 8.4 | 0.69 | 620 | 16.2 | 10.1 | 1.16 | 620 | 18.1 | 11.3 | 1.76 | 620 | 16.7 | 10.9 | 1.98 | 620 | 13 | 9.1 | 1.85 |
| | 67.0 (19.4) | | 13.7 | 12.7 | 0.52 | | 13.2 | 12.1 | 0.59 | | 12.4 | 11 | 0.71 | | 14.6 | 13.2 | 1.16 | | 16.5 | 14.6 | 1.77 | | 15.2 | 14.2 | 1.97 | | 12 | 11.4 | 1.84 |
| | 63.0 (17.2) | | 13.5 | 13.1 | 0.52 | | 13.1 | 12.3 | 0.59 | | 12.1 | 11.4 | 0.71 | | 14.2 | 14.1 | 1.16 | | 15.7 | 15.7 | 1.76 | | 14.7 | 14.7 | 1.97 | | 11.9 | 11.8 | 1.84 |
| | 57.0 (13.9) | | 13.5 | 13.1 | 0.52 | | 13.1 | 12.3 | 0.59 | | 12.1 | 11.4 | 0.71 | | 14.2 | 14.1 | 1.16 | | 15.7 | 15.7 | 1.76 | | 14.7 | 14.7 | 1.97 | | 11.9 | 11.8 | 1.84 |
| **B5H0V24 Minimum Demand** | | | | | | | | | | | | | | | | | | | | | | | | | | | | | |
| 75 (23.9) | 72.0 (22.2) | 500 | 7.1 | 3.6 | 0.21 | 500 | 6.5 | 3.3 | 0.27 | 500 | 5.9 | 3.1 | 0.35 | 485 | 11 | 4.7 | 0.72 | 485 | 14.9 | 6.3 | 1.37 | 485 | 13.7 | 5.9 | 1.57 | 485 | 12.5 | 5.3 | 1.79 |
| | 67.0 (19.4) | | 6.4 | 6.1 | 0.22 | | 5.9 | 5 | 0.28 | | 5.3 | 5.2 | 0.36 | | 9.8 | 7.1 | 0.73 | | 13.4 | 8.9 | 1.37 | | 12.3 | 8.5 | 1.56 | | 11.1 | 7.8 | 1.76 |
| | 63.0 (17.2) | | 6.3 | 6.3 | 0.23 | | 5.8 | 5.7 | 0.28 | | 5.3 | 5.2 | 0.36 | | 9.1 | 8.5 | 0.73 | | 12.3 | 10.9 | 1.37 | | 11.3 | 10.5 | 1.56 | | 10.2 | 9.7 | 1.74 |
| | 57.0 (13.9) | | 6.3 | 6.3 | 0.23 | | 5.8 | 5.7 | 0.28 | | 5.3 | 5.2 | 0.36 | | 9.1 | 8.7 | 0.73 | | 11.8 | 11.8 | 1.37 | | 11 | 11 | 1.56 | | 10.1 | 9.9 | 1.75 |
| 80 (26.7) | 72.0 (22.2) | 500 | 7.1 | 6.2 | 0.21 | 500 | 6.5 | 5.8 | 0.26 | 500 | 5.9 | 4.9 | 0.34 | 485 | 10.9 | 7.2 | 0.71 | 485 | 14.8 | 8.9 | 1.37 | 485 | 13.7 | 8.6 | 1.58 | 485 | 12.4 | 7.9 | 1.78 |
| | 67.0 (19.4) | | 6.9 | 6.9 | 0.21 | | 6.4 | 6.2 | 0.27 | | 5.8 | 5.7 | 0.34 | | 10 | 9 | 0.73 | | 13.4 | 11.5 | 1.38 | | 12.2 | 11.1 | 1.56 | | 11.1 | 10.3 | 1.76 |
| | 63.0 (17.2) | | 6.9 | 6.9 | 0.21 | | 6.4 | 6.2 | 0.27 | | 5.8 | 5.7 | 0.34 | | 9.8 | 9.5 | 0.72 | | 12.7 | 12.7 | 1.37 | | 11.8 | 11.8 | 1.56 | | 10.9 | 10.8 | 1.76 |
| | 57.0 (13.9) | | 6.9 | 6.9 | 0.21 | | 6.4 | 6.2 | 0.27 | | 5.8 | 5.7 | 0.34 | | 9.8 | 9.4 | 0.72 | | 12.6 | 12.6 | 1.37 | | 11.8 | 11.8 | 1.56 | | 10.9 | 10.7 | 1.76 |

Manufacturer reserves the right to change, at any time, specifications and designs without notice and without obligations.

# Detailed Cooling Capacities# - Cooling Efficiency Mode

| EDB | EVAP AIR EWB | CONDENSER ENTERING AIR TEMPERATURES °F (°C) | | | | | | | | | | | | | | | | | | | | | | | | | | | |
|---|---|---|---|---|---|---|---|---|---|---|---|---|---|---|---|---|---|---|---|---|---|---|---|---|---|---|---|---|---|
| | | 65.0 (18.3) | | | | 75.0 (23.9) | | | | 85.0 (29.4) | | | | 95.0 (35.0) | | | | 105.0 (40.6) | | | | 115.0 (46.1) | | | | 125.0 (51.7) | | | |
| | | ID SCFM | Capacity MBtuh† | | Total Sys. KW** | ID SCFM | Capacity MBtuh† | | Total Sys. KW** | ID SCFM | Capacity MBtuh† | | Total Sys. KW** | ID SCFM | Capacity MBtuh† | | Total Sys. KW** | ID SCFM | Capacity MBtuh† | | Total Sys. KW** | ID SCFM | Capacity MBtuh† | | Total Sys. KW** | ID SCFM | Capacity MBtuh† | | Total Sys. KW** |
| | | | Total | Sens‡ | | | Total | Sens‡ | | | Total | Sens‡ | | | Total | Sens‡ | | | Total | Sens‡ | | | Total | Sens‡ | | | Total | Sens‡ | |
| **B5H0V36 Maximum Demand** | | | | | | | | | | | | | | | | | | | | | | | | | | | | | |
| 75 (23.9) | 72.0 (22.2) | 1200 | 41 | 15.7 | 1.8 | 1200 | 42.5 | 16.7 | 2.47 | 1200 | 40.5 | 16.1 | 2.76 | 1200 | 38 | 15.4 | 3.08 | 1200 | 35.8 | 14.6 | 3.46 | 1200 | 34.2 | 13.9 | 3.89 | 1200 | 31.2 | 12.4 | 3.78 |
| | 67.0 (19.4) | | 37.4 | 21.8 | 1.86 | | 38.5 | 22.8 | 2.48 | | 36.8 | 22.2 | 2.77 | | 34.6 | 21.4 | 3.09 | | 32.6 | 20.6 | 3.44 | | 31.2 | 20 | 3.86 | | 28.2 | 18.8 | 3.74 |
| | 63.0 (17.2) | | 34.8 | 26.6 | 1.9 | | 35.8 | 27.6 | 2.5 | | 34.2 | 27 | 2.78 | | 32 | 26.2 | 3.08 | | 30.2 | 25.2 | 3.42 | | 28.8 | 24.6 | 3.82 | | 26.2 | 23.6 | 3.7 |
| | 57.0 (13.9) | | 32.6 | 31 | 1.92 | | 33.2 | 32.6 | 2.52 | | 31.8 | 31.6 | 2.77 | | 30 | 30 | 3.06 | | 28.6 | 28.6 | 3.4 | | 27.6 | 27.4 | 3.8 | | 26 | 24.2 | 3.71 |
| 80 (26.7) | 72.0 (22.2) | 1200 | 41 | 21.8 | 1.8 | 1200 | 42 | 22.6 | 2.45 | 1200 | 40.5 | 22.2 | 2.77 | 1200 | 37.8 | 21.4 | 3.08 | 1200 | 35.6 | 20.6 | 3.45 | 1200 | 34.2 | 19.9 | 3.9 | 1200 | 30.8 | 18.8 | 3.76 |
| | 67.0 (19.4) | | 37.2 | 27.8 | 1.85 | | 38.5 | 28.6 | 2.48 | | 36.8 | 28.2 | 2.77 | | 35 | 27.6 | 3.11 | | 32.4 | 26.4 | 3.42 | | 31.2 | 26 | 3.82 | | 28.2 | 24.8 | 3.72 |
| | 63.0 (17.2) | | 35 | 32.2 | 1.88 | | 36 | 33.2 | 2.5 | | 34.4 | 32.6 | 2.77 | | 32.4 | 31.6 | 3.09 | | 31 | 29 | 3.43 | | 30 | 27.8 | 3.85 | | 27.8 | 26 | 3.73 |
| | 57.0 (13.9) | | 34.6 | 32.8 | 1.89 | | 35.2 | 34.6 | 2.5 | | 33.8 | 33.6 | 2.77 | | 32 | 32 | 3.07 | | 30.4 | 30.4 | 3.41 | | 29.6 | 29.2 | 3.84 | | 27.8 | 26 | 3.74 |
| **B5H0V36 Intermediate Demand** | | | | | | | | | | | | | | | | | | | | | | | | | | | | | |
| 75 (23.9) | 72.0 (22.2) | 750 | 20.6 | 8.5 | 0.58 | 750 | 21.6 | 8.9 | 0.8 | 670 | 20.2 | 8.3 | 0.94 | 830 | 23.4 | 9.6 | 1.43 | 985 | 21.8 | 9.4 | 1.71 | 985 | 20.8 | 9 | 1.97 | 985 | 17.8 | 8 | 2.03 |
| | 67.0 (19.4) | | 18.5 | 12.1 | 0.62 | | 19.6 | 12.7 | 0.85 | | 18.3 | 11.8 | 0.98 | | 21 | 13.9 | 1.44 | | 19.7 | 14.3 | 1.72 | | 18.6 | 13.9 | 1.96 | | 16 | 13 | 2.04 |
| | 63.0 (17.2) | | 17.1 | 15 | 0.65 | | 18.1 | 15.6 | 0.87 | | 16.8 | 14.4 | 1 | | 19.5 | 17.1 | 1.46 | | 18.4 | 17.5 | 1.72 | | 17.6 | 16.5 | 1.96 | | 15.4 | 14.6 | 2.03 |
| | 57.0 (13.9) | | 16.6 | 16.1 | 0.67 | | 17.5 | 16.9 | 0.88 | | 16.1 | 15.7 | 1.01 | | 18.9 | 18.4 | 1.47 | | 18.3 | 17.9 | 1.73 | | 17.5 | 16.9 | 1.96 | | 15.4 | 14.6 | 2.03 |
| 80 (26.7) | 72.0 (22.2) | 750 | 20.4 | 12.2 | 0.57 | 750 | 21.6 | 12.7 | 0.81 | 670 | 20.2 | 11.8 | 0.95 | 830 | 23.2 | 13.9 | 1.43 | 985 | 21.6 | 14.4 | 1.7 | 985 | 20.4 | 14 | 1.95 | 985 | 17.6 | 13 | 2.04 |
| | 67.0 (19.4) | | 18.5 | 15.7 | 0.62 | | 19.4 | 16.3 | 0.84 | | 18.2 | 15.1 | 0.98 | | 21 | 18 | 1.44 | | 19.8 | 18.8 | 1.72 | | 19 | 17.7 | 1.96 | | 16.7 | 15.8 | 2.04 |
| | 63.0 (17.2) | | 17.8 | 17.2 | 0.64 | | 18.7 | 18.1 | 0.86 | | 17.5 | 16.3 | 0.99 | | 20.2 | 19.7 | 1.45 | | 19.7 | 19.2 | 1.72 | | 18.8 | 18.2 | 1.95 | | 16.7 | 15.8 | 2.04 |
| | 57.0 (13.9) | | 17.8 | 17.2 | 0.64 | | 18.7 | 18.1 | 0.86 | | 17.3 | 16.9 | 0.99 | | 20.2 | 19.7 | 1.45 | | 19.7 | 19.2 | 1.73 | | 18.8 | 18.2 | 1.96 | | 16.7 | 15.8 | 2.04 |
| **B5H0V36 Minimum Demand** | | | | | | | | | | | | | | | | | | | | | | | | | | | | | |
| 75 (23.9) | 72.0 (22.2) | 525 | 10.3 | 4.7 | 0.22 | 525 | 9.7 | 4.5 | 0.31 | 525 | 8.8 | 4.3 | 0.4 | 705 | 13.7 | 6.2 | 0.82 | 880 | 12.6 | 6.2 | 1.03 | 880 | 11.5 | 5.9 | 1.17 | 880 | 11 | 5.7 | 1.37 |
| | 67.0 (19.4) | | 9.2 | 7.2 | 0.25 | | 8.6 | 7.1 | 0.34 | | 7.8 | 6.8 | 0.42 | | 12.2 | 9.7 | 0.84 | | 11.3 | 10.3 | 1.05 | | 10.4 | 8.4 | 1.17 | | 9.8 | 9.4 | 1.36 |
| | 63.0 (17.2) | | 8.8 | 8.5 | 0.27 | | 8.3 | 8.1 | 0.35 | | 7.6 | 7.5 | 0.42 | | 11.6 | 11.4 | 0.85 | | 11.1 | 10.9 | 1.05 | | 10.2 | 10.1 | 1.18 | | 9.8 | 9.4 | 1.36 |
| | 57.0 (13.9) | | 8.7 | 8.5 | 0.27 | | 8.3 | 8.1 | 0.35 | | 7.6 | 7.5 | 0.43 | | 11.6 | 11.4 | 0.85 | | 11.1 | 10.9 | 1.05 | | 10.2 | 10.1 | 1.18 | | 9.8 | 9.4 | 1.36 |
| 80 (26.7) | 72.0 (22.2) | 525 | 10.2 | 7.3 | 0.22 | 525 | 9.6 | 7.2 | 0.31 | 525 | 8.7 | 6.9 | 0.39 | 705 | 13.6 | 9.7 | 0.82 | 880 | 12.5 | 10.4 | 1.03 | 880 | 11.4 | 10.1 | 1.17 | 880 | 10.9 | 9.9 | 1.37 |
| | 67.0 (19.4) | | 9.5 | 9.2 | 0.24 | | 9 | 8.8 | 0.32 | | 8.3 | 8.1 | 0.41 | | 12.8 | 11.4 | 0.83 | | 12.1 | 11.8 | 1.04 | | 11.1 | 11 | 1.17 | | 10.7 | 10.3 | 1.36 |
| | 63.0 (17.2) | | 9.5 | 9.2 | 0.24 | | 9 | 8.8 | 0.32 | | 8.3 | 8.1 | 0.41 | | 12.5 | 12.3 | 0.83 | | 12.1 | 11.8 | 1.04 | | 11.1 | 11 | 1.17 | | 10.8 | 10.3 | 1.37 |
| | 57.0 (13.9) | | 9.4 | 9.2 | 0.24 | | 9 | 8.7 | 0.32 | | 8.3 | 8.1 | 0.41 | | 12.5 | 12.3 | 0.83 | | 12 | 11.8 | 1.03 | | 11.1 | 11 | 1.17 | | 10.7 | 10.3 | 1.36 |

Manufacturer reserves the right to change, at any time, specifications and designs without notice and without obligations.

# Detailed Cooling Capacities# - Cooling Efficiency Mode

| EDB | EVAP AIR EWB | CONDENSER ENTERING AIR TEMPERATURES °F (°C) | | | | | | | | | | | | | | | | | | | | | | | | | | | |
|---|---|---|---|---|---|---|---|---|---|---|---|---|---|---|---|---|---|---|---|---|---|---|---|---|---|---|---|---|---|
| | | 65.0 (18.3) | | | | 75.0 (23.9) | | | | 85.0 (29.4) | | | | 95.0 (35.0) | | | | 105.0 (40.6) | | | | 115.0 (46.1) | | | | 125.0 (51.7) | | | |
| | | ID SCFM | Capacity MBtuh† | | Total Sys. KW** | ID SCFM | Capacity MBtuh† | | Total Sys. KW** | ID SCFM | Capacity MBtuh† | | Total Sys. KW** | ID SCFM | Capacity MBtuh† | | Total Sys. KW** | ID SCFM | Capacity MBtuh† | | Total Sys. KW** | ID SCFM | Capacity MBtuh† | | Total Sys. KW** | ID SCFM | Capacity MBtuh† | | Total Sys. KW** |
| | | | Total | Sens‡ | | | Total | Sens‡ | | | Total | Sens‡ | | | Total | Sens‡ | | | Total | Sens‡ | | | Total | Sens‡ | | | Total | Sens‡ | |
| **B5H0V48 Maximum Demand** | | | | | | | | | | | | | | | | | | | | | | | | | | | | | |
| 75 (23.9) | 72.0 (22.2) | 1350 | 50 | 20.8 | 2.01 | 1350 | 52 | 22.2 | 2.78 | 1350 | 55 | 22 | 3.77 | 1350 | 52.5 | 20.8 | 4.18 | 1350 | 50 | 19.4 | 4.63 | 1350 | 46.5 | 18.6 | 5.1 | 1350 | 34.4 | 16.3 | 4.25 |
| | 67.0 (19.4) | | 45.5 | 27.8 | 2.07 | | 47 | 29.4 | 2.8 | | 50 | 29 | 3.77 | | 48 | 27.6 | 4.18 | | 45.5 | 26.2 | 4.58 | | 42.5 | 25.4 | 5.04 | | 31.2 | 24 | 4.19 |
| | 63.0 (17.2) | | 42.5 | 33.4 | 2.13 | | 44 | 35.2 | 2.85 | | 46.5 | 34.4 | 3.77 | | 44.5 | 32.8 | 4.16 | | 42.5 | 31.6 | 4.57 | | 39.5 | 30.8 | 4.97 | | 29.2 | 29.2 | 4.17 |
| | 57.0 (13.9) | | 39 | 39 | 2.16 | | 40 | 40 | 2.84 | | 42 | 42 | 3.75 | | 40.5 | 40 | 4.12 | | 39 | 38 | 4.51 | | 36.8 | 36.6 | 4.92 | | 28.4 | 28.4 | 4.16 |
| 80 (26.7) | 72.0 (22.2) | 1350 | 50 | 27.8 | 2.01 | 1350 | 51.5 | 29.4 | 2.76 | 1350 | 54.5 | 28.8 | 3.74 | 1350 | 52.5 | 27.4 | 4.19 | 1350 | 49.5 | 26 | 4.6 | 1350 | 46.5 | 25.4 | 5.12 | 1350 | 34 | 23.8 | 4.23 |
| | 67.0 (19.4) | | 45.5 | 34.8 | 2.07 | | 47 | 36.4 | 2.81 | | 50 | 35.6 | 3.77 | | 46 | 33.6 | 4.24 | | 45 | 32.6 | 4.57 | | 44 | 32.8 | 5.06 | | 31 | 31 | 4.18 |
| | 63.0 (17.2) | | 42.5 | 40 | 2.11 | | 44 | 42 | 2.84 | | 46.5 | 41 | 3.77 | | 44.5 | 39.5 | 4.15 | | 42.5 | 38 | 4.55 | | 39.5 | 37.4 | 4.95 | | 30.2 | 30.2 | 4.18 |
| | 57.0 (13.9) | | 41 | 41 | 2.12 | | 42 | 42 | 2.83 | | 44.5 | 44.5 | 3.78 | | 43 | 42.5 | 4.16 | | 41 | 40.5 | 4.51 | | 39 | 39 | 4.96 | | 30.2 | 30.2 | 4.19 |
| **B5H0V48 Intermediate Demand** | | | | | | | | | | | | | | | | | | | | | | | | | | | | | |
| 75 (23.9) | 72.0 (22.2) | 950 | 29.6 | 11.5 | 0.81 | 950 | 29.4 | 12 | 1.13 | 850 | 29.2 | 11.9 | 1.42 | 1045 | 33.4 | 13.9 | 2.14 | 1145 | 31.8 | 13.2 | 2.47 | 1145 | 29.4 | 12.6 | 2.75 | 1145 | 23 | 10.9 | 2.67 |
| | 67.0 (19.4) | | 26.8 | 16.2 | 0.87 | | 26.6 | 16.9 | 1.17 | | 26.4 | 16.3 | 1.46 | | 30 | 19.3 | 2.15 | | 28.8 | 19.1 | 2.47 | | 26.4 | 18.6 | 2.73 | | 20.8 | 17.1 | 2.67 |
| | 63.0 (17.2) | | 24.8 | 19.9 | 0.91 | | 24.6 | 20.6 | 1.2 | | 24.4 | 19.7 | 1.48 | | 28 | 23.6 | 2.16 | | 26.6 | 23.6 | 2.46 | | 24.8 | 23.2 | 2.74 | | 19.7 | 19.7 | 2.66 |
| | 57.0 (13.9) | | 23.6 | 22.2 | 0.93 | | 23.4 | 23 | 1.22 | | 22.8 | 22.6 | 1.49 | | 26.4 | 26.4 | 2.15 | | 25.8 | 25.8 | 2.47 | | 24.2 | 24.2 | 2.73 | | 19.6 | 19.6 | 2.66 |
| 80 (26.7) | 72.0 (22.2) | 950 | 29.4 | 16.2 | 0.81 | 950 | 29.2 | 16.9 | 1.12 | 850 | 29 | 16.3 | 1.42 | 1045 | 33.2 | 19.4 | 2.13 | 1145 | 31.6 | 19.1 | 2.47 | 1145 | 29 | 18.6 | 2.74 | 1145 | 22.8 | 17.1 | 2.68 |
| | 67.0 (19.4) | | 26.6 | 20.8 | 0.86 | | 26.4 | 21.6 | 1.17 | | 26.2 | 20.6 | 1.45 | | 30.2 | 24.8 | 2.15 | | 28.6 | 24.8 | 2.46 | | 26.6 | 24.4 | 2.74 | | 21 | 21 | 2.66 |
| | 63.0 (17.2) | | 25.6 | 22.4 | 0.89 | | 25.4 | 23.4 | 1.19 | | 24.4 | 23.8 | 1.46 | | 28.4 | 28.4 | 2.16 | | 27.6 | 27.6 | 2.47 | | 25.8 | 25.8 | 2.73 | | 21 | 21 | 2.67 |
| | 57.0 (13.9) | | 25.2 | 23.6 | 0.9 | | 25 | 24.6 | 1.2 | | 24.2 | 24.2 | 1.47 | | 28.2 | 28.2 | 2.16 | | 27.6 | 27.4 | 2.47 | | 25.8 | 25.8 | 2.73 | | 21 | 21 | 2.67 |
| **B5H0V48 Minimum Demand** | | | | | | | | | | | | | | | | | | | | | | | | | | | | | |
| 75 (23.9) | 72.0 (22.2) | 750 | 17.5 | 7.6 | 0.38 | 750 | 16.2 | 7.5 | 0.53 | 750 | 15 | 7.1 | 0.67 | 895 | 22.6 | 9.4 | 1.32 | 1040 | 21.4 | 9.1 | 1.6 | 1040 | 19.5 | 8.6 | 1.79 | 1040 | 17.3 | 8.5 | 2.01 |
| | 67.0 (19.4) | | 15.8 | 11.4 | 0.43 | | 14.6 | 11.4 | 0.57 | | 13.5 | 11 | 0.7 | | 20.4 | 13.9 | 1.35 | | 19.2 | 14.1 | 1.61 | | 17.5 | 13.8 | 1.8 | | 15.5 | 13.9 | 2.01 |
| | 63.0 (17.2) | | 14.7 | 14.1 | 0.45 | | 13.7 | 13.6 | 0.59 | | 12.9 | 12.3 | 0.71 | | 18.9 | 17.2 | 1.36 | | 18.2 | 16.6 | 1.61 | | 16.7 | 16.1 | 1.8 | | 15 | 15 | 2.01 |
| | 57.0 (13.9) | | 14.6 | 14.3 | 0.46 | | 13.6 | 13.6 | 0.59 | | 12.7 | 12.7 | 0.71 | | 18.6 | 17.9 | 1.36 | | 18.1 | 17.1 | 1.62 | | 16.7 | 16.1 | 1.8 | | 15 | 15 | 2.01 |
| 80 (26.7) | 72.0 (22.2) | 750 | 17.4 | 11.4 | 0.38 | 750 | 16 | 11.4 | 0.52 | 750 | 14.9 | 11 | 0.67 | 895 | 22.4 | 13.9 | 1.32 | 1040 | 21 | 14.2 | 1.58 | 1040 | 19.2 | 13.8 | 1.78 | 1040 | 17.1 | 14 | 2.02 |
| | 67.0 (19.4) | | 15.9 | 14.9 | 0.42 | | 14.7 | 14.7 | 0.56 | | 13.8 | 13.6 | 0.69 | | 20.4 | 18.1 | 1.35 | | 19.7 | 17.4 | 1.6 | | 18.1 | 17 | 1.79 | | 16.2 | 16.2 | 2.01 |
| | 63.0 (17.2) | | 15.7 | 15.4 | 0.43 | | 14.6 | 14.6 | 0.56 | | 13.7 | 13.7 | 0.69 | | 20 | 19.2 | 1.35 | | 19.4 | 18.4 | 1.6 | | 18 | 17.3 | 1.79 | | 16.2 | 16.2 | 2.01 |
| | 57.0 (13.9) | | 15.7 | 15.3 | 0.43 | | 14.6 | 14.6 | 0.56 | | 13.7 | 13.7 | 0.69 | | 20 | 19.1 | 1.36 | | 19.4 | 18.4 | 1.6 | | 18 | 17.3 | 1.8 | | 16.2 | 16.2 | 2.01 |

Manufacturer reserves the right to change, at any time, specifications and designs without notice and without obligations.

# Detailed Cooling Capacities# - Cooling Efficiency Mode

| EDB | EVAP AIR EWB | CONDENSER ENTERING AIR TEMPERATURES °F (°C) | | | | | | | | | | | | | | | | | | | | | | | | | | | |
|---|---|---|---|---|---|---|---|---|---|---|---|---|---|---|---|---|---|---|---|---|---|---|---|---|---|---|---|---|---|
| | | 65.0 (18.3) | | | | 75.0 (23.9) | | | | 85.0 (29.4) | | | | 95.0 (35.0) | | | | 105.0 (40.6) | | | | 115.0 (46.1) | | | | 125.0 (51.7) | | | |
| | | ID SCFM | Capacity MBtuh† | | Total Sys. KW** | ID SCFM | Capacity MBtuh† | | Total Sys. KW** | ID SCFM | Capacity MBtuh† | | Total Sys. KW** | ID SCFM | Capacity MBtuh† | | Total Sys. KW** | ID SCFM | Capacity MBtuh† | | Total Sys. KW** | ID SCFM | Capacity MBtuh† | | Total Sys. KW** | ID SCFM | Capacity MBtuh† | | Total Sys. KW** |
| | | | Total | Sens‡ | | | Total | Sens‡ | | | Total | Sens‡ | | | Total | Sens‡ | | | Total | Sens‡ | | | Total | Sens‡ | | | Total | Sens‡ | |
| **B5H0V60 Maximum Demand** | | | | | | | | | | | | | | | | | | | | | | | | | | | | | |
| 75 (23.9) | 72.0 (22.2) | 1950 | 67 | 27.6 | 3.34 | 1950 | 65 | 27.8 | 3.94 | 1950 | 68 | 27.4 | 5.04 | 1950 | 64.5 | 26 | 5.6 | 1850 | 61 | 24.6 | 6.16 | 1700 | 57 | 23.6 | 6.83 | 1300 | 42.5 | 19.5 | 5.52 |
| | 67.0 (19.4) | | 60.5 | 37.6 | 3.35 | | 59.5 | 38 | 3.98 | | 61.5 | 37.2 | 4.98 | | 58.5 | 35.6 | 5.52 | | 55.5 | 33.8 | 6.07 | | 52 | 32.2 | 6.68 | | 38.5 | 27.2 | 5.44 |
| | 63.0 (17.2) | | 56.5 | 45.5 | 3.39 | | 55 | 46 | 3.99 | | 57 | 45 | 4.95 | | 54.5 | 43 | 5.51 | | 51.5 | 41 | 6 | | 48 | 39 | 6.54 | | 35.6 | 33 | 5.38 |
| | 57.0 (13.9) | | 52 | 52 | 3.38 | | 51 | 51 | 3.97 | | 52.5 | 52.5 | 4.9 | | 50.5 | 50.5 | 5.43 | | 48 | 48 | 5.93 | | 45 | 45 | 6.48 | | 33.8 | 33.8 | 5.35 |
| 80 (26.7) | 72.0 (22.2) | 1950 | 67 | 37.4 | 3.35 | 1950 | 65 | 37.8 | 3.94 | 1950 | 68 | 37 | 5.05 | 1950 | 64.5 | 35.4 | 5.62 | 1850 | 60.5 | 33.6 | 6.14 | 1700 | 57 | 32 | 6.85 | 1300 | 42.5 | 27.2 | 5.53 |
| | 67.0 (19.4) | | 60.5 | 47 | 3.35 | | 59 | 48 | 3.95 | | 61.5 | 47 | 4.98 | | 58 | 44.5 | 5.45 | | 55 | 42.5 | 6.03 | | 51.5 | 41.5 | 6.62 | | 38.5 | 34.6 | 5.45 |
| | 63.0 (17.2) | | 56.5 | 55 | 3.37 | | 55.5 | 55.5 | 3.99 | | 57.5 | 54 | 4.97 | | 55 | 52.5 | 5.51 | | 51.5 | 49.5 | 5.96 | | 48.5 | 47 | 6.59 | | 36.2 | 36.2 | 5.4 |
| | 57.0 (13.9) | | 55.5 | 55.5 | 3.39 | | 54.5 | 54.5 | 3.99 | | 56 | 56 | 4.94 | | 54 | 54 | 5.5 | | 51 | 51 | 5.99 | | 48 | 48 | 6.59 | | 36 | 36 | 5.39 |
| **B5H0V60 Intermediate Demand** | | | | | | | | | | | | | | | | | | | | | | | | | | | | | |
| 75 (23.9) | 72.0 (22.2) | 1170 | 36.6 | 14.5 | 0.96 | 1170 | 35 | 14.4 | 1.24 | 1080 | 35.2 | 14.4 | 1.63 | 1220 | 39.5 | 16.4 | 2.49 | 1380 | 37.4 | 15.9 | 2.89 | 1300 | 35 | 15.1 | 3.26 | 1130 | 28.2 | 12.7 | 3.08 |
| | 67.0 (19.4) | | 33 | 20.2 | 1.01 | | 31.8 | 20.4 | 1.29 | | 31.8 | 20 | 1.67 | | 35.8 | 22.8 | 2.5 | | 33.8 | 23 | 2.89 | | 31.6 | 22 | 3.24 | | 25.4 | 19 | 3.07 |
| | 63.0 (17.2) | | 30.6 | 24.8 | 1.05 | | 29.4 | 25 | 1.31 | | 29.2 | 24.4 | 1.68 | | 33 | 27.8 | 2.5 | | 31.4 | 28.4 | 2.89 | | 29.4 | 27.2 | 3.23 | | 23.4 | 23.4 | 3.02 |
| | 57.0 (13.9) | | 29.2 | 27.6 | 1.07 | | 28.2 | 27.6 | 1.32 | | 27.8 | 27.4 | 1.7 | | 31.2 | 31.2 | 2.49 | | 30.6 | 30.4 | 2.89 | | 28.6 | 28.6 | 3.22 | | 23.2 | 23.2 | 3.03 |
| 80 (26.7) | 72.0 (22.2) | 1170 | 36.4 | 20.2 | 0.96 | 1170 | 35 | 20.4 | 1.24 | 1080 | 35 | 20 | 1.62 | 1220 | 39.5 | 22.8 | 2.49 | 1380 | 37.2 | 23 | 2.88 | 1300 | 34.8 | 22 | 3.25 | 1130 | 28 | 19 | 3.08 |
| | 67.0 (19.4) | | 33 | 26 | 1.01 | | 31.8 | 26.2 | 1.28 | | 31.8 | 25.6 | 1.67 | | 35.6 | 29.2 | 2.49 | | 34.6 | 24.6 | 2.86 | | 32.4 | 23.8 | 3.21 | | 25.4 | 24.8 | 3.05 |
| | 63.0 (17.2) | | 31.6 | 28 | 1.03 | | 30.6 | 27.8 | 1.29 | | 30.2 | 27.8 | 1.68 | | 34 | 31.8 | 2.5 | | 32.8 | 32.6 | 2.89 | | 30.8 | 30.8 | 3.25 | | 25 | 25 | 3.05 |
| | 57.0 (13.9) | | 31.2 | 29.6 | 1.04 | | 30.2 | 29.4 | 1.3 | | 29.8 | 29.2 | 1.69 | | 33.4 | 33.4 | 2.5 | | 32.8 | 32.6 | 2.9 | | 30.6 | 30.6 | 3.23 | | 25 | 25 | 3.05 |
| **B5H0V60 Minimum Demand** | | | | | | | | | | | | | | | | | | | | | | | | | | | | | |
| 75 (23.9) | 72.0 (22.2) | 780 | 18.4 | 8.2 | 0.34 | 780 | 17.4 | 8.1 | 0.49 | 780 | 16.3 | 7.7 | 0.64 | 850 | 24.2 | 10.1 | 1.26 | 1150 | 23 | 10.2 | 1.55 | 1100 | 21.4 | 9.7 | 1.78 | 1050 | 19.9 | 9.6 | 2.09 |
| | 67.0 (19.4) | | 16.5 | 12.2 | 0.38 | | 15.6 | 12.2 | 0.53 | | 14.6 | 11.8 | 0.67 | | 21.8 | 14.4 | 1.29 | | 20.6 | 15.8 | 1.56 | | 19.1 | 15.2 | 1.78 | | 17.8 | 15.1 | 2.08 |
| | 63.0 (17.2) | | 15.4 | 15 | 0.41 | | 14.7 | 14.6 | 0.55 | | 14 | 12.8 | 0.68 | | 20 | 17.7 | 1.29 | | 19.7 | 18.3 | 1.57 | | 18.4 | 17.1 | 1.78 | | 17 | 17 | 2.07 |
| | 57.0 (13.9) | | 15.2 | 15.2 | 0.41 | | 14.6 | 14.6 | 0.55 | | 13.7 | 13.7 | 0.68 | | 19.5 | 18.8 | 1.3 | | 19.6 | 18.8 | 1.58 | | 18.2 | 17.8 | 1.78 | | 17 | 17 | 2.07 |
| 80 (26.7) | 72.0 (22.2) | 780 | 18.2 | 12.2 | 0.34 | 780 | 17.3 | 12.3 | 0.49 | 780 | 16.2 | 11.9 | 0.64 | 850 | 24.2 | 14.4 | 1.26 | 1150 | 22.8 | 15.9 | 1.54 | 1100 | 21.2 | 15.3 | 1.77 | 1050 | 19.7 | 15.3 | 2.08 |
| | 67.0 (19.4) | | 16.6 | 15.9 | 0.38 | | 16 | 15 | 0.52 | | 15.1 | 13.8 | 0.65 | | 21.8 | 18.6 | 1.28 | | 21.4 | 19.8 | 1.57 | | 19.9 | 18.6 | 1.78 | | 18.4 | 18.4 | 2.07 |
| | 63.0 (17.2) | | 16.4 | 16.4 | 0.38 | | 15.7 | 15.7 | 0.53 | | 14.8 | 14.8 | 0.66 | | 21 | 20.2 | 1.29 | | 21.2 | 20.4 | 1.57 | | 19.7 | 19.2 | 1.78 | | 18.4 | 18.4 | 2.07 |
| | 57.0 (13.9) | | 16.4 | 16.4 | 0.38 | | 15.7 | 15.7 | 0.53 | | 14.8 | 14.8 | 0.66 | | 21 | 20.2 | 1.29 | | 21.2 | 20.4 | 1.57 | | 19.7 | 19.2 | 1.78 | | 18.4 | 18.4 | 2.08 |

† Total and sensible capacities are net capacities. Blower motor heat has been subtracted.

‡ Sensible capacities shown are based on 80°F (27°C) entering air at the indoor coil. For sensible capacities at other than 80°F (27°C), deduct 835 Btuh (245 kW) per 1000 CFM (480 L/S) of indoor coil air for each degree below 80°F (27°C), or add 835 Btuh (245 kW) per 1000 CFM (480 L/S) of indoor coil air per degree above 80°F (27°C).

** System kw is total of indoor and outdoor unit kilowatts.

# Detailed cooling capacities are based on indoor and outdoor unit at the same elevation per AHRI standard 210/240-08. If additional tubing length and/or indoor unit is located above outdoor unit, a slight variation in capacity may occur.

NOTE: When the required data falls between the published data, interpolation may be performed. Extrapolation is not an acceptable practice.

**EDB**— Entering Dry Bulb **EWB** — Entering Wet Bulb

Manufacturer reserves the right to change, at any time, specifications and designs without notice and without obligations.

# Detailed Cooling Capacities# - Comfort + Dehumidify Mode

| EVAPORATOR AIR °F (°C) | | CONDENSER ENTERING AIR TEMPERATURES °F (°C) | | | | | | | | | | | | | | | | | | | | | | | | | | | |
|---|---|---|---|---|---|---|---|---|---|---|---|---|---|---|---|---|---|---|---|---|---|---|---|---|---|---|---|---|---|
| | | 65.0 (18.3) | | | | 75.0 (23.9) | | | | 85.0 (29.4) | | | | 95.0 (35.0) | | | | 105.0 (40.6) | | | | 115.0 (46.1) | | | | 125.0 (51.7) | | | |
| EDB | EWB | ID SCFM | Capacity Total | Capacity Sens‡ | Total Sys. KW** | ID SCFM | Capacity Total | Capacity Sens‡ | Total Sys. KW** | ID SCFM | Capacity Total | Capacity Sens‡ | Total Sys. KW** | ID SCFM | Capacity Total | Capacity Sens‡ | Total Sys. KW** | ID SCFM | Capacity Total | Capacity Sens‡ | Total Sys. KW** | ID SCFM | Capacity Total | Capacity Sens‡ | Total Sys. KW** | ID SCFM | Capacity Total | Capacity Sens‡ | Total Sys. KW** |
| **B5H0V24 Maximum Demand** | | | | | | | | | | | | | | | | | | | | | | | | | | | | | |
| 75 (23.9) | 72.0 (22.2) | 650 | 27.4 | 10.7 | 1.09 | 600 | 27.2 | 10.6 | 1.46 | 650 | 26.4 | 10.5 | 1.73 | 650 | 25 | 10.3 | 2.06 | 700 | 23.8 | 10.2 | 2.41 | 700 | 22.2 | 9.4 | 2.67 | 750 | 13.8 | 5.3 | 1.71 |
| | 67.0 (19.4) | | 25 | 14.1 | 1.12 | | 24.8 | 13.7 | 1.47 | | 24 | 13.9 | 1.74 | | 22.8 | 13.9 | 2.07 | | 21.6 | 14.1 | 2.39 | | 20.2 | 13.2 | 2.65 | | 12.4 | 8.4 | 1.71 |
| | 63.0 (17.2) | | 23.2 | 16.7 | 1.13 | | 22.8 | 16.1 | 1.47 | | 22.2 | 16.5 | 1.74 | | 21 | 16.6 | 2.05 | | 19.9 | 17.1 | 2.36 | | 18.7 | 16.2 | 2.63 | | 11.9 | 9.7 | 1.71 |
| | 57.0 (13.9) | | 21.2 | 19.9 | 1.15 | | 20.6 | 19.6 | 1.48 | | 20.4 | 19.5 | 1.75 | | 19.3 | 19.3 | 2.04 | | 18.7 | 18.7 | 2.35 | | 17.7 | 17.7 | 2.6 | | 11.8 | 9.7 | 1.7 |
| 80 (26.7) | 72.0 (22.2) | 650 | 27.4 | 14.1 | 1.09 | 600 | 27 | 13.7 | 1.45 | 650 | 26.4 | 13.8 | 1.74 | 650 | 25 | 13.8 | 2.07 | 700 | 23.6 | 14 | 2.4 | 700 | 22 | 13.2 | 2.66 | 750 | 13.7 | 8.5 | 1.72 |
| | 67.0 (19.4) | | 25 | 17.4 | 1.12 | | 24.6 | 16.8 | 1.47 | | 24.0 | 17.2 | 1.75 | | 22.6 | 17.3 | 2.05 | | 21.4 | 17.9 | 2.38 | | 20.2 | 16.9 | 2.66 | | 12.8 | 10.5 | 1.71 |
| | 63.0 (17.2) | | 23.2 | 20 | 1.13 | | 22.8 | 19.2 | 1.47 | | 22.2 | 19.8 | 1.74 | | 21 | 20 | 2.04 | | 20.2 | 20.2 | 2.38 | | 19.2 | 18.5 | 2.63 | | 12.8 | 10.5 | 1.71 |
| | 57.0 (13.9) | | 22.2 | 21.6 | 1.14 | | 21.6 | 21 | 1.48 | | 21.4 | 21.2 | 1.74 | | 20.6 | 20.6 | 2.06 | | 20 | 20 | 2.38 | | 18.9 | 18.9 | 2.63 | | 12.8 | 10.5 | 1.71 |
| **B5H0V24 Intermediate Demand** | | | | | | | | | | | | | | | | | | | | | | | | | | | | | |
| 75 (23.9) | 72.0 (22.2) | 400 | 17 | 6.4 | 0.65 | 400 | 17.2 | 6 | 0.76 | 450 | 16.7 | 6.1 | 0.9 | 450 | 15.7 | 6 | 1.08 | 450 | 15 | 5.9 | 1.3 | 450 | 13.8 | 5.4 | 1.46 | 450 | 10.3 | 3.9 | 1.3 |
| | 67.0 (19.4) | | 15.4 | 8.5 | 0.66 | | 15.5 | 8 | 0.77 | | 15.1 | 8.2 | 0.91 | | 14.1 | 8.2 | 1.09 | | 13.4 | 8.2 | 1.3 | | 12.4 | 7.6 | 1.46 | | 9 | 6 | 1.29 |
| | 63.0 (17.2) | | 14.2 | 10.1 | 0.67 | | 14.3 | 9.5 | 0.78 | | 13.9 | 9.9 | 0.92 | | 13 | 10 | 1.09 | | 12.3 | 9.9 | 1.3 | | 11.3 | 9.3 | 1.45 | | 8.4 | 7 | 1.28 |
| | 57.0 (13.9) | | 12.8 | 12.1 | 0.68 | | 12.8 | 11.3 | 0.79 | | 12.8 | 11.5 | 0.92 | | 12.1 | 11.3 | 1.09 | | 11.6 | 11.1 | 1.3 | | 10.8 | 10.1 | 1.44 | | 8.3 | 7.2 | 1.28 |
| 80 (26.7) | 72.0 (22.2) | 400 | 16.9 | 8.4 | 0.65 | 400 | 17.1 | 8 | 0.76 | 450 | 16.6 | 8.2 | 0.89 | 450 | 15.6 | 8.3 | 1.08 | 450 | 14.9 | 8.2 | 1.3 | 450 | 13.7 | 7.6 | 1.46 | 450 | 10.2 | 6 | 1.3 |
| | 67.0 (19.4) | | 15.3 | 10.5 | 0.66 | | 15.5 | 9.9 | 0.77 | | 15 | 10.4 | 0.91 | | 14 | 10.4 | 1.09 | | 13.4 | 10.4 | 1.31 | | 12.3 | 9.8 | 1.45 | | 9.2 | 7.7 | 1.3 |
| | 63.0 (17.2) | | 14.2 | 12 | 0.67 | | 14.3 | 11.3 | 0.78 | | 13.9 | 12 | 0.92 | | 13.1 | 12.1 | 1.09 | | 12.6 | 11.5 | 1.3 | | 11.7 | 10.9 | 1.46 | | 9.1 | 7.9 | 1.29 |
| | 57.0 (13.9) | | 13.6 | 12.8 | 0.67 | | 13.7 | 12.1 | 0.79 | | 13.7 | 12.2 | 0.92 | | 13 | 12.1 | 1.09 | | 12.5 | 11.9 | 1.31 | | 11.7 | 10.9 | 1.46 | | 9.1 | 7.8 | 1.3 |
| **B5H0V24 Minimum Demand** | | | | | | | | | | | | | | | | | | | | | | | | | | | | | |
| 75 (23.9) | 72.0 (22.2) | 300 | 12.1 | 4.8 | 0.49 | 300 | 12 | 4.5 | 0.49 | 300 | 11.3 | 4.4 | 0.59 | 300 | 10.4 | 4.2 | 0.72 | 300 | 10.2 | 4.2 | 0.9 | 300 | 9.3 | 3.8 | 1.03 | 300 | 8.2 | 3.1 | 1.09 |
| | 67.0 (19.4) | | 10.9 | 6.4 | 0.49 | | 10.7 | 6.1 | 0.5 | | 10.1 | 5.9 | 0.61 | | 9.3 | 5.8 | 0.73 | | 9.1 | 5.8 | 0.91 | | 8.1 | 5.3 | 1.02 | | 7.1 | 4.4 | 1.09 |
| | 63.0 (17.2) | | 10 | 7.7 | 0.5 | | 9.8 | 7.2 | 0.51 | | 9.2 | 7.1 | 0.62 | | 8.4 | 7 | 0.73 | | 8.2 | 7.1 | 0.91 | | 7.4 | 6 | 1.02 | | 6.4 | 5.5 | 1.09 |
| | 57.0 (13.9) | | 9.1 | 9.1 | 0.5 | | 8.9 | 8.4 | 0.52 | | 8.4 | 8.1 | 0.62 | | 7.9 | 7.9 | 0.74 | | 7.7 | 7.7 | 0.91 | | 7 | 7 | 1.01 | | 6.3 | 5.6 | 1.09 |
| 80 (26.7) | 72.0 (22.2) | 300 | 12 | 6.5 | 0.48 | 300 | 11.9 | 6.1 | 0.48 | 300 | 11.3 | 5.9 | 0.59 | 300 | 10.4 | 5.9 | 0.72 | 300 | 10.2 | 5.9 | 0.91 | 300 | 9.2 | 5.4 | 1.02 | 300 | 8.1 | 4.5 | 1.09 |
| | 67.0 (19.4) | | 10.8 | 8.1 | 0.49 | | 10.7 | 7.6 | 0.5 | | 10 | 7.4 | 0.61 | | 9.2 | 7.4 | 0.73 | | 9 | 7.5 | 0.91 | | 8.1 | 7 | 1.02 | | 7.1 | 5.9 | 1.09 |
| | 63.0 (17.2) | | 10 | 9.3 | 0.5 | | 9.8 | 8.7 | 0.51 | | 9.2 | 8.6 | 0.61 | | 8.6 | 8.2 | 0.73 | | 8.5 | 8.2 | 0.91 | | 7.7 | 7.6 | 1.02 | | 6.9 | 6.1 | 1.09 |
| | 57.0 (13.9) | | 9.7 | 9.7 | 0.5 | | 9.5 | 9 | 0.51 | | 9.1 | 8.7 | 0.62 | | 8.5 | 8.5 | 0.74 | | 8.3 | 8.3 | 0.91 | | 7.7 | 7.6 | 1.03 | | 6.9 | 6.1 | 1.09 |

Manufacturer reserves the right to change, at any time, specifications and designs without notice and without obligations.

# Detailed Cooling Capacities# - Comfort + Dehumidify Mode

| EVAPORATOR AIR °F (°C) | | CONDENSER ENTERING AIR TEMPERATURES °F (°C) | | | | | | | | | | | | | | | | | | | | | | | | | | | |
|---|---|---|---|---|---|---|---|---|---|---|---|---|---|---|---|---|---|---|---|---|---|---|---|---|---|---|---|---|---|
| | | 65.0 (18.3) | | | | 75.0 (23.9) | | | | 85.0 (29.4) | | | | 95.0 (35.0) | | | | 105.0 (40.6) | | | | 115.0 (46.1) | | | | 125.0 (51.7) | | | |
| EDB | EWB | ID SCFM | Capacity Total | Capacity Sens‡ | Total Sys. KW** | ID SCFM | Capacity Total | Capacity Sens‡ | Total Sys. KW** | ID SCFM | Capacity Total | Capacity Sens‡ | Total Sys. KW** | ID SCFM | Capacity Total | Capacity Sens‡ | Total Sys. KW** | ID SCFM | Capacity Total | Capacity Sens‡ | Total Sys. KW** | ID SCFM | Capacity Total | Capacity Sens‡ | Total Sys. KW** | ID SCFM | Capacity Total | Capacity Sens‡ | Total Sys. KW** |
| **B5H0V36 Maximum Demand** | | | | | | | | | | | | | | | | | | | | | | | | | | | | | |
| 75 (23.9) | 72.0 (22.2) | 900 | 39 | 14.8 | 1.51 | 800 | 40 | 15.6 | 2.08 | 800 | 38.5 | 15.2 | 2.45 | 800 | 36.4 | 14.6 | 2.86 | 800 | 34.6 | 13.9 | 3.23 | 800 | 33.2 | 13.3 | 3.65 | 800 | 30.6 | 11.8 | 3.51 |
| | 67.0 (19.4) | | 35.4 | 19.5 | 1.56 | | 36.6 | 19.8 | 2.12 | | 35.2 | 19.4 | 2.48 | | 33.2 | 18.8 | 2.86 | | 31.4 | 18 | 3.2 | | 30.2 | 17.4 | 3.61 | | 27.8 | 16.2 | 3.48 |
| | 63.0 (17.2) | | 32.8 | 23.2 | 1.6 | | 33.8 | 23.2 | 2.13 | | 32.4 | 22.6 | 2.47 | | 30.6 | 22 | 2.84 | | 29 | 21.2 | 3.18 | | 27.8 | 20.6 | 3.56 | | 25.6 | 19.6 | 3.44 |
| | 57.0 (13.9) | | 29.8 | 27.4 | 1.63 | | 30.2 | 27.8 | 2.14 | | 29 | 27.4 | 2.47 | | 27.4 | 26.6 | 2.84 | | 25.8 | 25.6 | 3.13 | | 25 | 24.8 | 3.51 | | 23.8 | 22.4 | 3.4 |
| 80 (26.7) | 72.0 (22.2) | 900 | 38.5 | 19.4 | 1.49 | 800 | 40 | 19.8 | 2.08 | 800 | 38.5 | 19.4 | 2.46 | 800 | 36.4 | 18.8 | 2.86 | 800 | 34.4 | 18 | 3.22 | 800 | 33.2 | 17.4 | 3.66 | 800 | 30.4 | 16.2 | 3.5 |
| | 67.0 (19.4) | | 35.2 | 24 | 1.55 | | 36.4 | 24 | 2.11 | | 35 | 23.6 | 2.46 | | 33 | 22.8 | 2.84 | | 31.2 | 22 | 3.19 | | 30 | 21.6 | 3.6 | | 27.6 | 20.6 | 3.47 |
| | 63.0 (17.2) | | 32.8 | 27.6 | 1.59 | | 33.8 | 27.2 | 2.13 | | 32.4 | 26.8 | 2.47 | | 30.6 | 26 | 2.84 | | 29 | 25.2 | 3.18 | | 27.8 | 24.6 | 3.56 | | 25.8 | 23.6 | 3.45 |
| | 57.0 (13.9) | | 31.4 | 29.6 | 1.61 | | 31.4 | 30.2 | 2.14 | | 30.2 | 29.6 | 2.48 | | 28.6 | 28.6 | 2.84 | | 27.2 | 27.2 | 3.14 | | 26.6 | 26.4 | 3.55 | | 25.6 | 23.8 | 3.45 |
| **B5H0V36 Intermediate Demand** | | | | | | | | | | | | | | | | | | | | | | | | | | | | | |
| 75 (23.9) | 72.0 (22.2) | 625 | 24.4 | 9.6 | 0.74 | 625 | 25.6 | 10 | 1.01 | 625 | 24.4 | 9.6 | 1.19 | 625 | 23.4 | 9.3 | 1.42 | 625 | 23 | 9.2 | 1.73 | 625 | 21.8 | 8.7 | 1.97 | 625 | 19.3 | 7.8 | 2.06 |
| | 67.0 (19.4) | | 22.2 | 12.8 | 0.79 | | 23.2 | 13.3 | 1.05 | | 22 | 12.9 | 1.21 | | 21 | 12.6 | 1.43 | | 20.6 | 12.4 | 1.72 | | 19.7 | 12 | 1.98 | | 17.3 | 11.1 | 2.05 |
| | 63.0 (17.2) | | 20.6 | 15.2 | 0.83 | | 21.4 | 15.8 | 1.07 | | 20.2 | 15.4 | 1.22 | | 19.4 | 15.1 | 1.45 | | 19 | 14.9 | 1.73 | | 18.1 | 14.5 | 1.97 | | 15.7 | 13.5 | 2.03 |
| | 57.0 (13.9) | | 18.7 | 18 | 0.86 | | 19.5 | 18.7 | 1.09 | | 18.6 | 18 | 1.24 | | 17.9 | 17.4 | 1.45 | | 17.6 | 17.1 | 1.73 | | 16.9 | 16.3 | 1.95 | | 15.4 | 14.5 | 2.04 |
| 80 (26.7) | 72.0 (22.2) | 625 | 24.4 | 12.7 | 0.74 | 625 | 25.6 | 13.3 | 1.01 | 625 | 24.2 | 12.9 | 1.18 | 625 | 23.2 | 12.6 | 1.41 | 625 | 22.8 | 12.4 | 1.72 | 625 | 21.8 | 12 | 1.99 | 625 | 19.1 | 11.1 | 2.06 |
| | 67.0 (19.4) | | 22.2 | 15.9 | 0.79 | | 23 | 16.4 | 1.04 | | 22 | 16.1 | 1.21 | | 21 | 15.7 | 1.43 | | 20.6 | 15.6 | 1.73 | | 19.6 | 15.2 | 1.97 | | 17.2 | 14.4 | 2.05 |
| | 63.0 (17.2) | | 20.6 | 18.3 | 0.83 | | 21.4 | 19 | 1.07 | | 20.4 | 18.6 | 1.23 | | 19.4 | 18.2 | 1.44 | | 19.1 | 18 | 1.73 | | 18.4 | 16.8 | 1.96 | | 16.5 | 15.6 | 2.04 |
| | 57.0 (13.9) | | 19.9 | 19.1 | 0.83 | | 20.8 | 19.9 | 1.08 | | 19.8 | 19.2 | 1.23 | | 19.1 | 18.6 | 1.44 | | 18.8 | 18.3 | 1.72 | | 18.1 | 17.4 | 1.96 | | 16.5 | 15.6 | 2.04 |
| **B5H0V36 Minimum Demand** | | | | | | | | | | | | | | | | | | | | | | | | | | | | | |
| 75 (23.9) | 72.0 (22.2) | 400 | 16.7 | 6.6 | 0.48 | 400 | 16 | 6.4 | 0.59 | 400 | 15 | 6.1 | 0.71 | 400 | 14 | 5.7 | 0.84 | 400 | 14.4 | 5.9 | 1.09 | 400 | 13.5 | 5.5 | 1.26 | 400 | 13.1 | 5.3 | 1.48 |
| | 67.0 (19.4) | | 15.1 | 8.5 | 0.52 | | 14.4 | 8.4 | 0.62 | | 13.5 | 8.1 | 0.74 | | 12.5 | 7.7 | 0.86 | | 12.9 | 7.8 | 1.11 | | 12 | 7.5 | 1.26 | | 11.7 | 7.3 | 1.48 |
| | 63.0 (17.2) | | 13.8 | 10.1 | 0.54 | | 13.2 | 9.9 | 0.64 | | 12.3 | 9.6 | 0.75 | | 11.4 | 9.2 | 0.86 | | 11.7 | 9.4 | 1.11 | | 10.9 | 9 | 1.26 | | 10.6 | 8.9 | 1.47 |
| | 57.0 (13.9) | | 12.4 | 12 | 0.57 | | 11.9 | 11.7 | 0.66 | | 11.3 | 11.1 | 0.76 | | 10.6 | 10.5 | 0.87 | | 10.8 | 10.7 | 1.11 | | 10.2 | 10.1 | 1.26 | | 10.1 | 9.6 | 1.47 |
| 80 (26.7) | 72.0 (22.2) | 400 | 16.7 | 8.6 | 0.48 | 400 | 15.9 | 8.4 | 0.59 | 400 | 14.9 | 8.1 | 0.71 | 400 | 13.9 | 7.7 | 0.84 | 400 | 14.3 | 7.9 | 1.09 | 400 | 13.4 | 7.6 | 1.26 | 400 | 13 | 7.4 | 1.48 |
| | 67.0 (19.4) | | 15 | 10.5 | 0.52 | | 14.2 | 10.4 | 0.62 | | 13.4 | 10.1 | 0.74 | | 12.5 | 9.7 | 0.86 | | 12.8 | 9.8 | 1.1 | | 12 | 9.5 | 1.27 | | 11.6 | 9.4 | 1.48 |
| | 63.0 (17.2) | | 13.8 | 12 | 0.54 | | 13.2 | 11.9 | 0.64 | | 12.3 | 11.6 | 0.75 | | 11.5 | 11.2 | 0.87 | | 11.8 | 11.3 | 1.11 | | 11.2 | 10.6 | 1.27 | | 10.9 | 10.4 | 1.47 |
| | 57.0 (13.9) | | 13.2 | 12.8 | 0.56 | | 12.8 | 12.5 | 0.65 | | 12.1 | 11.9 | 0.75 | | 11.4 | 11.2 | 0.87 | | 11.6 | 11.5 | 1.11 | | 11 | 10.8 | 1.26 | | 10.9 | 10.4 | 1.47 |

Manufacturer reserves the right to change, at any time, specifications and designs without notice and without obligations.

# Detailed Cooling Capacities# - Comfort + Dehumidify Mode

| EVAPORATOR AIR °F (°C) | | CONDENSER ENTERING AIR TEMPERATURES °F (°C) | | | | | | | | | | | | | | | | | | | | | | | | | | | |
|---|---|---|---|---|---|---|---|---|---|---|---|---|---|---|---|---|---|---|---|---|---|---|---|---|---|---|---|---|---|
| | | 65.0 (18.3) | | | | 75.0 (23.9) | | | | 85.0 (29.4) | | | | 95.0 (35.0) | | | | 105.0 (40.6) | | | | 115.0 (46.1) | | | | 125.0 (51.7) | | | |
| EDB | EWB | ID SCFM | Capacity Total | Capacity Sens‡ | Total Sys. KW** | ID SCFM | Capacity Total | Capacity Sens‡ | Total Sys. KW** | ID SCFM | Capacity Total | Capacity Sens‡ | Total Sys. KW** | ID SCFM | Capacity Total | Capacity Sens‡ | Total Sys. KW** | ID SCFM | Capacity Total | Capacity Sens‡ | Total Sys. KW** | ID SCFM | Capacity Total | Capacity Sens‡ | Total Sys. KW** | ID SCFM | Capacity Total | Capacity Sens‡ | Total Sys. KW** |
| **B5H0V48 Maximum Demand** | | | | | | | | | | | | | | | | | | | | | | | | | | | | | |
| 75 (23.9) | 72.0 (22.2) | 1150 | 53 | 21.8 | 2.18 | 1150 | 50 | 21.6 | 2.58 | 1150 | 48 | 20.8 | 2.99 | 1150 | 52 | 20.4 | 4.08 | 1050 | 49 | 19 | 4.44 | 1000 | 45.5 | 18.1 | 4.86 | 1000 | 34 | 15.9 | 4.05 |
| | 67.0 (19.4) | | 48 | 28 | 2.22 | | 45.5 | 28 | 2.61 | | 44 | 27 | 3.03 | | 47 | 26.4 | 4.02 | | 44.5 | 24.4 | 4.39 | | 41.5 | 23.4 | 4.79 | | 31 | 21.8 | 4.01 |
| | 63.0 (17.2) | | 44.5 | 32.6 | 2.25 | | 42.5 | 32.8 | 2.66 | | 40.5 | 32 | 3.01 | | 44 | 31 | 4.04 | | 41.5 | 28.6 | 4.37 | | 38.5 | 27.6 | 4.73 | | 28.8 | 26.4 | 3.97 |
| | 57.0 (13.9) | | 40 | 39.5 | 2.29 | | 38 | 38 | 2.66 | | 36.6 | 36.6 | 3.02 | | 39.5 | 37.6 | 3.99 | | 37.2 | 34.8 | 4.3 | | 34.8 | 33.4 | 4.68 | | 26.8 | 26.8 | 3.93 |
| 80 (26.7) | 72.0 (22.2) | 1150 | 52.5 | 27.8 | 2.16 | 1150 | 50 | 27.8 | 2.59 | 1150 | 48 | 27 | 2.99 | 1150 | 51.5 | 26.2 | 4.04 | 1050 | 49 | 24.4 | 4.45 | 1000 | 45.5 | 23.4 | 4.87 | 1000 | 33.8 | 21.6 | 4.04 |
| | 67.0 (19.4) | | 48 | 33.8 | 2.22 | | 45.5 | 34 | 2.62 | | 43.5 | 33.2 | 3 | | 47 | 32 | 4.03 | | 44.5 | 29.8 | 4.4 | | 41.5 | 28.6 | 4.8 | | 31 | 27.4 | 4.02 |
| | 63.0 (17.2) | | 44.5 | 38.5 | 2.25 | | 42.5 | 39 | 2.66 | | 40.5 | 38 | 3.01 | | 44 | 36.6 | 4.04 | | 41.5 | 34 | 4.37 | | 38.5 | 32.6 | 4.74 | | 29 | 29 | 3.98 |
| | 57.0 (13.9) | | 41.5 | 41.5 | 2.27 | | 40 | 40 | 2.67 | | 38.5 | 38.5 | 3.02 | | 41 | 40.5 | 3.99 | | 38.5 | 37.8 | 4.3 | | 36.2 | 36 | 4.7 | | 28.4 | 28.4 | 3.96 |
| **B5H0V48 Intermediate Demand** | | | | | | | | | | | | | | | | | | | | | | | | | | | | | |
| 75 (23.9) | 72.0 (22.2) | 825 | 35.8 | 14 | 1.1 | 750 | 33.2 | 13.6 | 1.35 | 750 | 31.6 | 13 | 1.6 | 750 | 32.4 | 13.2 | 2.04 | 750 | 32.2 | 13.1 | 2.45 | 750 | 30 | 12.5 | 2.75 | 700 | 24.6 | 11 | 2.75 |
| | 67.0 (19.4) | | 32.4 | 18.2 | 1.15 | | 30 | 17.6 | 1.38 | | 28.6 | 17 | 1.63 | | 29.2 | 17.2 | 2.04 | | 29 | 17.1 | 2.44 | | 27.2 | 16.6 | 2.73 | | 22.2 | 14.9 | 2.73 |
| | 63.0 (17.2) | | 30 | 21.6 | 1.18 | | 27.8 | 20.8 | 1.41 | | 26.4 | 20.2 | 1.65 | | 26.8 | 20.2 | 2.04 | | 26.8 | 20.2 | 2.44 | | 25 | 19.8 | 2.71 | | 20.6 | 18 | 2.72 |
| | 57.0 (13.9) | | 27.2 | 25.4 | 1.22 | | 24.8 | 24.8 | 1.44 | | 24 | 23.4 | 1.66 | | 24.2 | 24.2 | 2.05 | | 24 | 24 | 2.42 | | 22.8 | 22.8 | 2.69 | | 19.1 | 19.1 | 2.71 |
| 80 (26.7) | 72.0 (22.2) | 825 | 35.6 | 18.2 | 1.09 | 750 | 33 | 17.6 | 1.34 | 750 | 31.6 | 17 | 1.6 | 750 | 32.2 | 17.2 | 2.03 | 750 | 32 | 17.1 | 2.45 | 750 | 29.8 | 16.6 | 2.74 | 700 | 24.4 | 14.9 | 2.76 |
| | 67.0 (19.4) | | 32.2 | 22.4 | 1.14 | | 30 | 21.6 | 1.39 | | 28.4 | 20.8 | 1.63 | | 29 | 21 | 2.05 | | 29 | 21 | 2.45 | | 27 | 20.6 | 2.72 | | 22.2 | 18.8 | 2.74 |
| | 63.0 (17.2) | | 30 | 25.6 | 1.18 | | 27.8 | 24.6 | 1.41 | | 26.4 | 24 | 1.64 | | 27 | 24.2 | 2.05 | | 26.8 | 24.2 | 2.44 | | 25 | 23.8 | 2.71 | | 20.6 | 20.6 | 2.72 |
| | 57.0 (13.9) | | 28.6 | 27.8 | 1.2 | | 26.2 | 26.2 | 1.43 | | 25.2 | 25.2 | 1.65 | | 25.8 | 25.8 | 2.06 | | 25.6 | 25.6 | 2.43 | | 24.2 | 24.2 | 2.7 | | 20.4 | 20.4 | 2.73 |
| **B5H0V48 Minimum Demand** | | | | | | | | | | | | | | | | | | | | | | | | | | | | | |
| 75 (23.9) | 72.0 (22.2) | 500 | 25.2 | 9.5 | 0.69 | 500 | 23.8 | 9.4 | 0.88 | 500 | 22.4 | 8.9 | 1.07 | 500 | 21.4 | 8.3 | 1.25 | 500 | 23 | 8.9 | 1.71 | 500 | 21.4 | 8.4 | 1.93 | 500 | 19.3 | 8.3 | 2.18 |
| | 67.0 (19.4) | | 22.8 | 12 | 0.73 | | 21.4 | 12 | 0.91 | | 20.2 | 11.5 | 1.09 | | 19.2 | 10.9 | 1.26 | | 20.8 | 11.4 | 1.72 | | 19.3 | 11 | 1.93 | | 17.3 | 11 | 2.16 |
| | 63.0 (17.2) | | 21 | 14 | 0.76 | | 19.6 | 13.9 | 0.94 | | 18.6 | 13.4 | 1.11 | | 17.6 | 12.8 | 1.27 | | 19 | 13.4 | 1.72 | | 17.5 | 13 | 1.91 | | 15.9 | 13.1 | 2.15 |
| | 57.0 (13.9) | | 18.6 | 16.8 | 0.8 | | 17.4 | 16.8 | 0.96 | | 16.5 | 16 | 1.12 | | 15.8 | 15.2 | 1.28 | | 16.9 | 15.9 | 1.72 | | 15.8 | 15.3 | 1.91 | | 14.5 | 14.5 | 2.14 |
| 80 (26.7) | 72.0 (22.2) | 500 | 25.2 | 12.1 | 0.69 | 500 | 23.6 | 12 | 0.88 | 500 | 22.4 | 11.5 | 1.07 | 500 | 21.2 | 10.9 | 1.24 | 500 | 23 | 11.5 | 1.71 | 500 | 21.2 | 11.1 | 1.92 | 500 | 19.2 | 11 | 2.18 |
| | 67.0 (19.4) | | 22.8 | 14.5 | 0.73 | | 21.4 | 14.5 | 0.92 | | 20.2 | 14 | 1.1 | | 19.1 | 13.4 | 1.26 | | 20.6 | 13.9 | 1.72 | | 19.2 | 13.6 | 1.93 | | 17.3 | 13.8 | 2.17 |
| | 63.0 (17.2) | | 21 | 16.4 | 0.76 | | 19.6 | 16.5 | 0.94 | | 18.5 | 16 | 1.11 | | 17.6 | 15.3 | 1.27 | | 19 | 15.9 | 1.72 | | 17.6 | 15.6 | 1.92 | | 15.9 | 15.8 | 2.15 |
| | 57.0 (13.9) | | 19.3 | 18.1 | 0.78 | | 18.3 | 18 | 0.95 | | 17.5 | 17.2 | 1.12 | | 16.9 | 16.2 | 1.28 | | 17.9 | 17.1 | 1.72 | | 16.9 | 16.4 | 1.92 | | 15.5 | 15.5 | 2.15 |

# Detailed Cooling Capacities# - Comfort + Dehumidify Mode

| EVAPORATOR AIR °F (°C) | | CONDENSER ENTERING AIR TEMPERATURES °F (°C) | | | | | | | | | | | | | | | | | | | | | | | | | | | |
|---|---|---|---|---|---|---|---|---|---|---|---|---|---|---|---|---|---|---|---|---|---|---|---|---|---|---|---|---|---|
| | | 65.0 (18.3) | | | | 75.0 (23.9) | | | | 85.0 (29.4) | | | | 95.0 (35.0) | | | | 105.0 (40.6) | | | | 115.0 (46.1) | | | | 125.0 (51.7) | | | |
| EDB | EWB | ID SCFM | Capacity Total | Capacity Sens‡ | Total Sys. KW** | ID SCFM | Capacity Total | Capacity Sens‡ | Total Sys. KW** | ID SCFM | Capacity Total | Capacity Sens‡ | Total Sys. KW** | ID SCFM | Capacity Total | Capacity Sens‡ | Total Sys. KW** | ID SCFM | Capacity Total | Capacity Sens‡ | Total Sys. KW** | ID SCFM | Capacity Total | Capacity Sens‡ | Total Sys. KW** | ID SCFM | Capacity Total | Capacity Sens‡ | Total Sys. KW** |
| **B5H0V60 Maximum Demand** | | | | | | | | | | | | | | | | | | | | | | | | | | | | | |
| 75 (23.9) | 72.0 (22.2) | 1600 | 69 | 27.8 | 3.41 | 1500 | 67 | 27.6 | 3.95 | 1400 | 63 | 26.4 | 4.4 | 1300 | 60 | 25 | 4.93 | 1150 | 55.5 | 23.2 | 5.43 | 1000 | 52 | 22 | 6.19 | 900 | 40.5 | 18.3 | 5.33 |
| | 67.0 (19.4) | | 62.5 | 36 | 3.4 | | 61 | 35.6 | 3.94 | | 57.5 | 34 | 4.39 | | 54.5 | 32 | 4.87 | | 50.5 | 29.4 | 5.35 | | 47 | 27.4 | 6.03 | | 36.8 | 23.6 | 5.27 |
| | 63.0 (17.2) | | 58 | 42.5 | 3.4 | | 56.5 | 42 | 3.93 | | 53 | 40 | 4.34 | | 50.5 | 37.4 | 4.84 | | 46.5 | 34.4 | 5.26 | | 43.5 | 31.8 | 5.93 | | 34 | 27.8 | 5.21 |
| | 57.0 (13.9) | | 52.5 | 51.5 | 3.4 | | 51 | 50.5 | 3.91 | | 48 | 48 | 4.32 | | 45 | 45 | 4.73 | | 42 | 41.5 | 5.21 | | 39 | 38 | 5.8 | | 30.6 | 30.6 | 5.12 |
| 80 (26.7) | 72.0 (22.2) | 1600 | 68 | 35.8 | 3.37 | 1500 | 67 | 35.6 | 3.95 | 1400 | 63 | 34 | 4.41 | 1300 | 59.5 | 32 | 4.89 | 1150 | 55.5 | 29.4 | 5.44 | 1000 | 52 | 27.4 | 6.19 | 900 | 40.5 | 23.6 | 5.34 |
| | 67.0 (19.4) | | 62.5 | 44 | 3.4 | | 60.5 | 43.5 | 3.91 | | 57.5 | 41.5 | 4.4 | | 54.5 | 39 | 4.88 | | 50.5 | 35.6 | 5.36 | | 47 | 33 | 6.03 | | 36.8 | 29 | 5.29 |
| | 63.0 (17.2) | | 58 | 50.5 | 3.4 | | 56.5 | 49.5 | 3.93 | | 53 | 47 | 4.34 | | 50.5 | 44 | 4.84 | | 46.5 | 40.5 | 5.26 | | 43.5 | 37.2 | 5.93 | | 34 | 33.2 | 5.21 |
| | 57.0 (13.9) | | 55 | 55 | 3.4 | | 53 | 53 | 3.9 | | 50 | 50 | 4.32 | | 47 | 47 | 4.76 | | 43.5 | 43.5 | 5.24 | | 40 | 40 | 5.85 | | 32.2 | 32.2 | 5.16 |
| **B5H0V60 Intermediate Demand** | | | | | | | | | | | | | | | | | | | | | | | | | | | | | |
| 75 (23.9) | 72.0 (22.2) | 1030 | 40 | 15.8 | 1.26 | 1000 | 39 | 15.7 | 1.51 | 970 | 36.4 | 14.7 | 1.72 | 930 | 37.4 | 15.2 | 2.32 | 880 | 37.4 | 15.3 | 2.94 | 800 | 37.4 | 15.8 | 3.77 | 730 | 32 | 13.8 | 3.79 |
| | 67.0 (19.4) | | 36.4 | 21 | 1.29 | | 35.4 | 21 | 1.55 | | 33 | 19.8 | 1.76 | | 34 | 20.2 | 2.34 | | 33.8 | 20 | 2.92 | | 33.8 | 20.2 | 3.73 | | 28.8 | 18 | 3.74 |
| | 63.0 (17.2) | | 33.6 | 25.2 | 1.31 | | 32.6 | 25.2 | 1.57 | | 30.4 | 23.8 | 1.77 | | 31.2 | 24 | 2.34 | | 31 | 23.8 | 2.9 | | 31.2 | 23.8 | 3.7 | | 26.4 | 21.2 | 3.7 |
| | 57.0 (13.9) | | 31 | 29.8 | 1.34 | | 30 | 29.6 | 1.59 | | 28 | 27.6 | 1.78 | | 28.4 | 28.4 | 2.33 | | 28 | 28 | 2.88 | | 27.6 | 27.6 | 3.62 | | 23.8 | 23.8 | 3.65 |
| 80 (26.7) | 72.0 (22.2) | 1030 | 40 | 21 | 1.26 | 1000 | 39 | 21 | 1.51 | 970 | 36.2 | 19.8 | 1.72 | 930 | 37.4 | 20.2 | 2.33 | 880 | 37.2 | 20.2 | 2.93 | 800 | 37.2 | 20.4 | 3.76 | 730 | 31.8 | 18.1 | 3.78 |
| | 67.0 (19.4) | | 36.2 | 26.2 | 1.29 | | 35.2 | 26.2 | 1.54 | | 32.8 | 24.8 | 1.75 | | 33.8 | 25.2 | 2.33 | | 33.6 | 24.8 | 2.92 | | 33.6 | 24.8 | 3.72 | | 28.6 | 22.2 | 3.72 |
| | 63.0 (17.2) | | 33.8 | 30.2 | 1.31 | | 32.8 | 30.2 | 1.57 | | 30.6 | 28.6 | 1.77 | | 31.4 | 28.8 | 2.34 | | 31.2 | 28.4 | 2.92 | | 31 | 28.2 | 3.68 | | 26.4 | 25.4 | 3.7 |
| | 57.0 (13.9) | | 32.8 | 31.8 | 1.32 | | 32 | 31.4 | 1.57 | | 30 | 29.4 | 1.77 | | 30.4 | 30.2 | 2.34 | | 29.8 | 29.8 | 2.89 | | 29.2 | 29.2 | 3.65 | | 25.4 | 25.4 | 3.69 |
| **B5H0V60 Minimum Demand** | | | | | | | | | | | | | | | | | | | | | | | | | | | | | |
| 75 (23.9) | 72.0 (22.2) | 600 | 22.2 | 8.8 | 0.51 | 500 | 20.8 | 8.3 | 0.66 | 500 | 19.9 | 8 | 0.81 | 500 | 22.6 | 8.8 | 1.24 | 500 | 24.8 | 9.7 | 1.79 | 500 | 26.6 | 10.7 | 2.48 | 500 | 26 | 10.8 | 3.04 |
| | 67.0 (19.4) | | 20 | 11.9 | 0.54 | | 18.7 | 10.9 | 0.69 | | 17.8 | 10.6 | 0.83 | | 20.2 | 11.3 | 1.25 | | 22.2 | 12.2 | 1.79 | | 24 | 13.3 | 2.48 | | 23.2 | 13.6 | 2.98 |
| | 63.0 (17.2) | | 18.4 | 14.2 | 0.57 | | 17.2 | 12.9 | 0.71 | | 16.3 | 12.6 | 0.85 | | 18.5 | 13.3 | 1.27 | | 20.4 | 14.2 | 1.8 | | 21.8 | 15.3 | 2.44 | | 21.2 | 15.8 | 2.95 |
| | 57.0 (13.9) | | 17 | 16.4 | 0.59 | | 15.5 | 15.2 | 0.73 | | 14.9 | 14.6 | 0.87 | | 16.4 | 15.8 | 1.27 | | 17.8 | 16.9 | 1.78 | | 19.2 | 18.2 | 2.42 | | 18.6 | 18.6 | 2.91 |
| 80 (26.7) | 72.0 (22.2) | 600 | 22 | 11.9 | 0.51 | 500 | 20.8 | 11 | 0.66 | 500 | 19.8 | 10.6 | 0.8 | 500 | 22.6 | 11.4 | 1.24 | 500 | 24.8 | 12.3 | 1.79 | 500 | 26.6 | 13.4 | 2.49 | 500 | 25.8 | 13.7 | 3.02 |
| | 67.0 (19.4) | | 20 | 14.9 | 0.55 | | 18.7 | 13.5 | 0.69 | | 17.8 | 13.2 | 0.84 | | 20.2 | 13.9 | 1.26 | | 22.2 | 14.8 | 1.79 | | 23.8 | 16 | 2.46 | | 23.2 | 16.5 | 2.99 |
| | 63.0 (17.2) | | 18.5 | 17.2 | 0.57 | | 17.2 | 15.5 | 0.71 | | 16.3 | 15.1 | 0.85 | | 18.5 | 15.9 | 1.27 | | 20.4 | 16.7 | 1.8 | | 21.8 | 18 | 2.44 | | 21.2 | 18.6 | 2.95 |
| | 57.0 (13.9) | | 18.2 | 17.5 | 0.57 | | 16.6 | 16.2 | 0.71 | | 15.9 | 15.6 | 0.86 | | 17.6 | 16.9 | 1.27 | | 18.9 | 18.2 | 1.79 | | 20 | 19.8 | 2.43 | | 19.6 | 19.6 | 2.93 |

† Total and sensible capacities are net capacities. Blower motor heat has been subtracted.

‡ Sensible capacities shown are based on 80°F (27°C) entering air at the indoor coil. For sensible capacities at other than 80°F (27°C), deduct 835 Btuh (245 kW) per 1000 CFM (480 L/S) of indoor coil air for each degree below 80°F (27°C), or add 835 Btuh (245 kW) per 1000 CFM (480 L/S) of indoor coil air per degree above 80°F (27°C).

** System kw is total of indoor and outdoor unit kilowatts.

# Detailed cooling capacities are based on indoor and outdoor unit at the same elevation per AHRI standard 210/240-08. If additional tubing length and/or indoor unit is located above outdoor unit, a slight variation in capacity may occur.

NOTE: When the required data falls between the published data, interpolation may be performed. Extrapolation is not an acceptable practice.

**EDB**— Entering Dry Bulb **EWB** — Entering Wet Bulb

# Heat Pump Heating Performance - Efficiency Mode

| INDOOR AIR °F (°C) | OUTDOOR ENTERING AIR TEMPERATURES °F (°C) | | | | | | | | | | | | | | | | | | | | | | | | | | | | | | | | | | | |
|---|---|---|---|---|---|---|---|---|---|---|---|---|---|---|---|---|---|---|---|---|---|---|---|---|---|---|---|---|---|---|---|---|---|---|---|---|
| | -3 (-19.4) | | | | 7 (-13.9) | | | | 17 (-8.3) | | | | 27 (-2.8) | | | | 37 (2.7) | | | | 47 (8.3) | | | | 57 (13.9) | | | | 67 (19.4) | | | |
| EDB | ID SCFM | Capacity MBtuh | | Total Sys. KW† | ID SCFM | Capacity MBtuh | | Total Sys. KW† | ID SCFM | Capacity MBtuh | | Total Sys. KW† | ID SCFM | Capacity MBtuh | | Total Sys. KW† | ID SCFM | Capacity MBtuh | | Total Sys. KW† | ID SCFM | Capacity MBtuh | | Total Sys. KW† | ID SCFM | Capacity MBtuh | | Total Sys. KW† | ID SCFM | Capacity MBtuh | | Total Sys. KW† |
| | | Total | Integ‡ | | | Total | Integ‡ | | | Total | Integ‡ | | | Total | Integ‡ | | | Total | Integ‡ | | | Total | Integ‡ | | | Total | Integ‡ | | | Total | Integ‡ | |
| **B5H0V24 Maximum Demand** | | | | | | | | | | | | | | | | | | | | | | | | | | | | | | | | | | | | |
| 65 (18.3) | 900 | 12.5 | 11.5 | 1.4 | 900 | 18.3 | 16.8 | 2.22 | 900 | 20.6 | 18.9 | 2.36 | 900 | 24 | 21.4 | 2.44 | 900 | 27.6 | 25.2 | 2.54 | 900 | 24.4 | 24.4 | 1.82 | 900 | 26.6 | 26.6 | 1.76 | 900 | 28.8 | 28.8 | 1.82 |
| 70 (21.1) | | 12.3 | 11.4 | 1.44 | | 18.2 | 16.7 | 2.3 | | 22 | 20 | 2.42 | | 23.8 | 21.2 | 2.55 | | 27.4 | 25 | 2.66 | | 24.6 | 24.6 | 2.06 | | 26.4 | 26.4 | 1.87 | | 28.6 | 28.6 | 1.92 |
| 75 (23.9) | | 12.2 | 11.3 | 1.5 | | 18.1 | 16.7 | 2.39 | | 20.4 | 18.7 | 2.58 | | 23.8 | 21 | 2.68 | | 27.2 | 24.8 | 2.77 | | 24 | 24 | 2.02 | | 26.2 | 26.2 | 1.97 | | 28.2 | 28.2 | 2.03 |
| **B5H0V24 Intermediate Demand** | | | | | | | | | | | | | | | | | | | | | | | | | | | | | | | | | | | | |
| 65 (18.3) | 765 | 8 | 7.3 | 0.91 | 765 | 10.9 | 10 | 1.21 | 765 | 12.7 | 11.6 | 1.29 | 720 | 11.8 | 10.5 | 0.99 | 700 | 12.2 | 11.1 | 0.87 | 635 | 11.7 | 11.7 | 0.73 | 635 | 12.6 | 12.6 | 0.67 | 675 | 14.1 | 14.1 | 0.66 |
| 70 (21.1) | | 7.9 | 7.2 | 0.96 | | 10.8 | 9.9 | 1.27 | | 12.6 | 11.5 | 1.36 | | 11.6 | 10.3 | 1.04 | | 12 | 10.9 | 0.91 | | 11.5 | 11.5 | 0.78 | | 12.4 | 12.4 | 0.72 | | 13.9 | 13.9 | 0.71 |
| 75 (23.9) | | 7.7 | 7.1 | 0.98 | | 10.7 | 9.8 | 1.33 | | 12.5 | 11.4 | 1.42 | | 11.5 | 10.2 | 1.1 | | 11.8 | 10.8 | 0.96 | | 11.3 | 11.3 | 0.82 | | 12.3 | 12.3 | 0.77 | | 13.6 | 13.6 | 0.76 |
| **B5H0V24 Minimum Demand** | | | | | | | | | | | | | | | | | | | | | | | | | | | | | | | | | | | | |
| 65 (18.3) | 500 | 5.7 | 5.2 | 0.67 | 500 | 6.9 | 6.4 | 0.79 | 500 | 8.3 | 7.5 | 0.85 | 500 | 5.3 | 4.7 | 0.44 | 500 | 3.8 | 3.5 | 0.25 | 500 | 4.8 | 4.8 | 0.3 | 500 | 5.2 | 5.2 | 0.27 | 500 | 5.7 | 5.7 | 0.24 |
| 70 (21.1) | | 5.6 | 5.1 | 0.71 | | 6.8 | 6.3 | 0.83 | | 8.1 | 7.4 | 0.89 | | 5.2 | 4.6 | 0.47 | | 3.9 | 3.5 | 0.31 | | 5 | 5 | 0.3 | | 5.1 | 5.1 | 0.29 | | 5.7 | 5.7 | 0.27 |
| 75 (23.9) | | 5.4 | 5 | 0.73 | | 6.7 | 6.2 | 0.87 | | 8 | 7.3 | 0.93 | | 5.1 | 4.5 | 0.5 | | 3.8 | 3.4 | 0.33 | | 4.5 | 4.5 | 0.34 | | 5 | 5 | 0.31 | | 5.6 | 5.6 | 0.29 |

Manufacturer reserves the right to change, at any time, specifications and designs without notice and without obligations.

# Heat Pump Heating Performance - Efficiency Mode (Continued)

| INDOOR AIR °F (°C) | OUTDOOR ENTERING AIR TEMPERATURES °F (°C) | | | | | | | | | | | | | | | | | | | | | | | | | | | | | | | |
|---|---|---|---|---|---|---|---|---|---|---|---|---|---|---|---|---|---|---|---|---|---|---|---|---|---|---|---|---|---|---|---|---|
| | -3 (-19.4) | | | | 7 (-13.9) | | | | 17 (-8.3) | | | | 27 (-2.8) | | | | 37 (2.7) | | | | 47 (8.3) | | | | 57 (13.9) | | | | 67 (19.4) | | | |
| EDB | ID SCFM | Capacity MBtuh | | Total Sys. KW† | ID SCFM | Capacity MBtuh | | Total Sys. KW† | ID SCFM | Capacity MBtuh | | Total Sys. KW† | ID SCFM | Capacity MBtuh | | Total Sys. KW† | ID SCFM | Capacity MBtuh | | Total Sys. KW† | ID SCFM | Capacity MBtuh | | Total Sys. KW† | ID SCFM | Capacity MBtuh | | Total Sys. KW† | ID SCFM | Capacity MBtuh | | Total Sys. KW† |
| | | Total | Integ‡ | | | Total | Integ‡ | | | Total | Integ‡ | | | Total | Integ‡ | | | Total | Integ‡ | | | Total | Integ‡ | | | Total | Integ‡ | | | Total | Integ‡ | |
| **B5H0V36 Maximum Demand** | | | | | | | | | | | | | | | | | | | | | | | | | | | | | | | | |
| 65 (18.3) | | 19.3 | 17.7 | 2.28 | | 27.8 | 25.4 | 3.48 | | 32.2 | 29.4 | 3.84 | | 37 | 33 | 3.9 | | 39 | 35.4 | 3.46 | | 36.6 | 36.6 | 2.93 | | 37.2 | 37.2 | 2.65 | | 33.2 | 33.2 | 2.12 |
| 70 (21.1) | 1200 | 19.1 | 17.6 | 2.37 | 1200 | 27.6 | 25.4 | 3.61 | 1200 | 32.8 | 29.8 | 3.81 | 1200 | 38.5 | 34.4 | 4.15 | 1170 | 41 | 37.2 | 3.71 | 1050 | 34.8 | 34.8 | 2.88 | 1155 | 36.8 | 36.8 | 2.78 | 1200 | 33.2 | 33.2 | 2.25 |
| 75 (23.9) | | 19 | 17.5 | 2.46 | | 27.6 | 25.4 | 3.78 | | 32.2 | 29.4 | 4.18 | | 36.8 | 32.8 | 4.25 | | 38.5 | 35 | 3.79 | | 36 | 36 | 3.22 | | 36.6 | 36.6 | 2.93 | | 32.4 | 32.4 | 2.36 |
| **B5H0V36 Intermediate Demand** | | | | | | | | | | | | | | | | | | | | | | | | | | | | | | | | |
| 65 (18.3) | | 11.8 | 10.9 | 1.33 | | 16.4 | 15.1 | 1.75 | | 19.6 | 17.9 | 1.9 | | 17.6 | 15.6 | 1.39 | | 16.3 | 14.8 | 1.09 | | 16.3 | 16.3 | 1 | | 17.2 | 17.2 | 0.93 | | 16.6 | 16.6 | 0.78 |
| 70 (21.1) | 900 | 11.7 | 10.8 | 1.39 | 900 | 16.3 | 15 | 1.84 | 900 | 19.4 | 17.7 | 1.99 | 830 | 17.4 | 15.4 | 1.47 | 800 | 16.1 | 14.6 | 1.16 | 750 | 16.1 | 16.1 | 1.07 | 785 | 17 | 17 | 1 | 785 | 16.4 | 16.4 | 0.85 |
| 75 (23.9) | | 11.6 | 10.7 | 1.45 | | 16.1 | 14.8 | 1.92 | | 19.3 | 17.6 | 2.08 | | 17.2 | 15.3 | 1.54 | | 15.8 | 14.4 | 1.22 | | 15.9 | 15.9 | 1.14 | | 16.8 | 16.8 | 1.07 | | 16.1 | 16.1 | 0.91 |
| **B5H0V36 Minimum Demand** | | | | | | | | | | | | | | | | | | | | | | | | | | | | | | | | |
| 65 (18.3) | | 8.4 | 7.7 | 0.95 | | 10.2 | 9.4 | 1.08 | | 12.4 | 11.3 | 1.14 | | 7.5 | 6.6 | 0.56 | | 5.4 | 4.9 | 0.34 | | 6.6 | 6.6 | 0.36 | | 7.5 | 7.5 | 0.34 | | 8.2 | 8.2 | 0.32 |
| 70 (21.1) | 750 | 8.2 | 7.6 | 0.99 | 750 | 10 | 9.2 | 1.12 | 750 | 12.2 | 11.1 | 1.2 | 645 | 7.3 | 6.5 | 0.59 | 600 | 5.3 | 4.8 | 0.38 | 600 | 6.4 | 6.4 | 0.36 | 600 | 7.3 | 7.3 | 0.37 | 580 | 8 | 8 | 0.36 |
| 75 (23.9) | | 8.1 | 7.5 | 1.04 | | 9.9 | 9.1 | 1.18 | | 12.1 | 11 | 1.27 | | 7.2 | 6.4 | 0.63 | | 5.1 | 4.7 | 0.4 | | 6.2 | 6.2 | 0.42 | | 7.2 | 7.2 | 0.41 | | 7.8 | 7.8 | 0.39 |

Manufacturer reserves the right to change, at any time, specifications and designs without notice and without obligations.

# Heat Pump Heating Performance - Efficiency Mode (Continued)

| INDOOR AIR °F (°C) | OUTDOOR ENTERING AIR TEMPERATURES °F (°C) | | | | | | | | | | | | | | | | | | | | | | | | | | | | | | | |
|---|---|---|---|---|---|---|---|---|---|---|---|---|---|---|---|---|---|---|---|---|---|---|---|---|---|---|---|---|---|---|---|---|
| | -3 (-19.4) | | | | 7 (-13.9) | | | | 17 (-8.3) | | | | 27 (-2.8) | | | | 37 (2.7) | | | | 47 (8.3) | | | | 57 (13.9) | | | | 67 (19.4) | | | |
| EDB | ID SCFM | Capacity MBtuh | | Total Sys. KW† | ID SCFM | Capacity MBtuh | | Total Sys. KW† | ID SCFM | Capacity MBtuh | | Total Sys. KW† | ID SCFM | Capacity MBtuh | | Total Sys. KW† | ID SCFM | Capacity MBtuh | | Total Sys. KW† | ID SCFM | Capacity MBtuh | | Total Sys. KW† | ID SCFM | Capacity MBtuh | | Total Sys. KW† | ID SCFM | Capacity MBtuh | | Total Sys. KW† |
| | | Total | Integ‡ | | | Total | Integ‡ | | | Total | Integ‡ | | | Total | Integ‡ | | | Total | Integ‡ | | | Total | Integ‡ | | | Total | Integ‡ | | | Total | Integ‡ | |
| **B5H0V48 Maximum Demand** | | | | | | | | | | | | | | | | | | | | | | | | | | | | | | | | |
| 65 (18.3) | | 22.2 | 20.4 | 2.58 | | 39 | 35.8 | 4.36 | | 46 | 42 | 4.81 | | 52.5 | 46.5 | 4.96 | | 55.5 | 50.5 | 4.76 | | 48.5 | 48.5 | 3.88 | | 47.5 | 47.5 | 3.41 | | 43 | 43 | 2.84 |
| 70 (21.1) | 1450 | 22 | 20.2 | 2.69 | 1450 | 39 | 35.8 | 4.54 | 1450 | 46 | 42 | 4.88 | 1450 | 52 | 46.5 | 5.15 | 1420 | 55 | 50 | 4.94 | 1300 | 48.5 | 48.5 | 4.04 | 1450 | 47 | 47 | 3.59 | 1450 | 42.5 | 42.5 | 3.01 |
| 75 (23.9) | | 21.8 | 20.2 | 2.78 | | 38.5 | 35.6 | 4.7 | | 46 | 42 | 5.27 | | 52 | 46 | 5.37 | | 55.5 | 46.5 | 4.7 | | 51 | 47 | 4.11 | | 46.5 | 46.5 | 3.74 | | 42 | 42 | 3.16 |
| **B5H0V48 Intermediate Demand** | | | | | | | | | | | | | | | | | | | | | | | | | | | | | | | | |
| 65 (18.3) | | 17.7 | 16.3 | 1.98 | | 25.8 | 23.8 | 2.63 | | 31 | 28.2 | 2.89 | | 27.4 | 24.4 | 2.19 | | 24.8 | 22.6 | 1.76 | | 23.8 | 23.8 | 1.59 | | 24.2 | 24.2 | 1.44 | | 23.4 | 23.4 | 1.24 |
| 70 (21.1) | 1150 | 17.5 | 16.1 | 2.07 | 1150 | 25.6 | 23.6 | 2.74 | 1150 | 30.6 | 28 | 3.01 | 1130 | 27.2 | 24.2 | 2.3 | 1200 | 24.6 | 22.4 | 1.86 | 965 | 23.4 | 23.4 | 1.68 | 1015 | 24 | 24 | 1.54 | 1015 | 23 | 23 | 1.33 |
| 75 (23.9) | | 17.4 | 16 | 2.16 | | 25.4 | 23.4 | 2.86 | | 30.4 | 27.8 | 3.14 | | 27 | 24 | 2.43 | | 24.4 | 22.2 | 1.96 | | 23 | 23 | 1.77 | | 23.6 | 23.6 | 1.62 | | 22.8 | 22.8 | 1.43 |
| **B5H0V48 Minimum Demand** | | | | | | | | | | | | | | | | | | | | | | | | | | | | | | | | |
| 65 (18.3) | | 15.3 | 14.1 | 1.71 | | 19.3 | 17.7 | 1.98 | | 23.4 | 21.2 | 2.16 | | 15.1 | 13.4 | 1.13 | | 10.1 | 9.1 | 0.62 | | 11.5 | 11.5 | 0.65 | | 12.6 | 12.6 | 0.64 | | 13.6 | 13.6 | 0.61 |
| 70 (21.1) | 1000 | 15.2 | 14 | 1.8 | 1000 | 19.1 | 17.6 | 2.07 | 1000 | 23 | 21 | 2.25 | 860 | 14.8 | 13.2 | 1.2 | 800 | 9.9 | 9 | 0.67 | 800 | 11.4 | 11.4 | 0.68 | 800 | 12.4 | 12.4 | 0.69 | 800 | 13.4 | 13.4 | 0.67 |
| 75 (23.9) | | 15 | 13.8 | 1.88 | | 18.9 | 17.4 | 2.18 | | 22.8 | 20.8 | 2.35 | | 14.6 | 13 | 1.27 | | 9.7 | 8.8 | 0.71 | | 11.1 | 11.1 | 0.76 | | 12.2 | 12.2 | 0.74 | | 13.2 | 13.2 | 0.72 |

Manufacturer reserves the right to change, at any time, specifications and designs without notice and without obligations.

# Heat Pump Heating Performance - Efficiency Mode (Continued)

| INDOOR AIR °F (°C) | OUTDOOR ENTERING AIR TEMPERATURES °F (°C) | | | | | | | | | | | | | | | | | | | | | | | | | | | | | | | |
|---|---|---|---|---|---|---|---|---|---|---|---|---|---|---|---|---|---|---|---|---|---|---|---|---|---|---|---|---|---|---|---|---|
| | -3 (-19.4) | | | | 7 (-13.9) | | | | 17 (-8.3) | | | | 27 (-2.8) | | | | 37 (2.7) | | | | 47 (8.3) | | | | 57 (13.9) | | | | 67 (19.4) | | | |
| EDB | ID SCFM | Capacity MBtuh | | Total Sys. KW† | ID SCFM | Capacity MBtuh | | Total Sys. KW† | ID SCFM | Capacity MBtuh | | Total Sys. KW† | ID SCFM | Capacity MBtuh | | Total Sys. KW† | ID SCFM | Capacity MBtuh | | Total Sys. KW† | ID SCFM | Capacity MBtuh | | Total Sys. KW† | ID SCFM | Capacity MBtuh | | Total Sys. KW† | ID SCFM | Capacity MBtuh | | Total Sys. KW† |
| | | Total | Integ‡ | | | Total | Integ‡ | | | Total | Integ‡ | | | Total | Integ‡ | | | Total | Integ‡ | | | Total | Integ‡ | | | Total | Integ‡ | | | Total | Integ‡ | |
| **B5H0V60 Maximum Demand** | | | | | | | | | | | | | | | | | | | | | | | | | | | | | | | | |
| 65 (18.3) | | 32.6 | 30 | 3.62 | | 45.5 | 42 | 4.8 | 1850 | 55 | 50 | 5.37 | | 63.5 | 56 | 5.61 | | 65 | 59 | 5.84 | | 61.5 | 61.5 | 5.67 | | 56 | 56 | 4.37 | | 48.5 | 48.5 | 2.97 |
| 70 (21.1) | 1530 | 33.2 | 30.6 | 3.86 | 1850 | 45.5 | 42 | 5.01 | | 54.5 | 50 | 6.14 | 1850 | 63 | 56 | 5.84 | 1850 | 64.5 | 58.5 | 6.1 | 1850 | 59 | 59 | 4.78 | 1850 | 55.5 | 55.5 | 4.62 | 1770 | 48 | 48 | 3.17 |
| 75 (23.9) | | 33 | 30.4 | 4.03 | | 45.5 | 41.5 | 5.25 | | 54.5 | 49.5 | 5.83 | | 62.5 | 55.5 | 6.07 | | 63.5 | 58 | 6.33 | | 60 | 60 | 6.19 | | 55 | 55 | 4.86 | | 47 | 47 | 3.33 |
| **B5H0V60 Intermediate Demand** | | | | | | | | | | | | | | | | | | | | | | | | | | | | | | | | |
| 65 (18.3) | | 22 | 20.2 | 2.37 | | 29.6 | 27.2 | 2.85 | | 35.6 | 32.4 | 3.12 | | 32.4 | 28.8 | 2.34 | | 29 | 26.4 | 1.98 | | 28.2 | 28.2 | 1.96 | | 28.6 | 28.6 | 1.66 | | 27.4 | 27.4 | 1.26 |
| 70 (21.1) | 980 | 21.6 | 19.9 | 2.47 | 1080 | 29.4 | 27 | 2.99 | 1080 | 35.2 | 32.2 | 3.26 | 1080 | 32 | 28.4 | 2.46 | 1135 | 28.6 | 26 | 2.1 | 1080 | 27.8 | 27.8 | 2.09 | 1180 | 28 | 28 | 1.77 | 1165 | 27 | 27 | 1.37 |
| 75 (23.9) | | 21.4 | 19.7 | 2.59 | | 29 | 26.6 | 3.12 | | 34.8 | 31.8 | 3.4 | | 31.6 | 28 | 2.59 | | 28 | 25.6 | 2.21 | | 27.4 | 27.4 | 2.22 | | 27.6 | 27.6 | 1.9 | | 26.4 | 26.4 | 1.48 |
| **B5H0V60 Minimum Demand** | | | | | | | | | | | | | | | | | | | | | | | | | | | | | | | | |
| 65 (18.3) | | 16.1 | 14.8 | 1.79 | | 19.8 | 18.2 | 1.92 | | 23.6 | 21.6 | 2.03 | | 14.8 | 13.1 | 0.98 | | 11.5 | 10.5 | 0.73 | | 13.1 | 13.1 | 0.82 | | 15.1 | 15.1 | 0.76 | | 17.3 | 17.3 | 0.7 |
| 70 (21.1) | 700 | 15.8 | 14.6 | 1.87 | 700 | 19.5 | 17.9 | 2.01 | 700 | 23.2 | 21.2 | 2.12 | 700 | 14.4 | 12.8 | 1.04 | 700 | 11.2 | 10.2 | 0.79 | 700 | 12 | 12 | 0.69 | 840 | 14.7 | 14.7 | 0.83 | 860 | 16.8 | 16.8 | 0.77 |
| 75 (23.9) | | 15.6 | 14.3 | 1.95 | | 19.2 | 17.6 | 2.1 | | 23 | 21 | 2.23 | | 14.1 | 12.5 | 1.1 | | 10.9 | 9.9 | 0.84 | | 12.4 | 12.4 | 0.95 | | 14.3 | 14.3 | 0.91 | | 16.4 | 16.4 | 0.85 |

**NOTES**:

† The kW values include the compressor, outdoor fan motor, and indoor blower motor. The kW from supplement heaters should be added to these values to obtain Total Sys. kilowatts.

} The Btuh heating capacity values shown are net integrated values from which the defrost effect has been subtracted. The Btuh heating from supplement heaters should be added to those values to obtain Total Sys. capacity.

NOTE: When the required data falls between the published data, interpolation may be performed. Extrapolation is not an acceptable practice.

**EDB** — Entering Dry Bulb

Manufacturer reserves the right to change, at any time, specifications and designs without notice and without obligations.

# Heat Pump Heating Performance - Comfort Mode

| INDOOR AIR °F (°C) | OUTDOOR ENTERING AIR TEMPERATURES °F (°C) | | | | | | | | | | | | | | | | | | | | | | | | | | | | | | | |
|---|---|---|---|---|---|---|---|---|---|---|---|---|---|---|---|---|---|---|---|---|---|---|---|---|---|---|---|---|---|---|---|---|
| | -3 (-19.4) | | | | 7 (-13.9) | | | | 17 (-8.3) | | | | 27 (-2.8) | | | | 37 (2.7) | | | | 47 (8.3) | | | | 57 (13.9) | | | | 67 (19.4) | | | |
| EDB | ID SCFM | Capacity | | Total Sys. KW** | ID SCFM | Capacity | | Total Sys. KW** | ID SCFM | Capacity | | Total Sys. KW** | ID SCFM | Capacity | | Total Sys. KW** | ID SCFM | Capacity | | Total Sys. KW** | ID SCFM | Capacity | | Total Sys. KW** | ID SCFM | Capacity | | Total Sys. KW** | ID SCFM | Capacity | | Total Sys. KW** |
| | | Total | Integ‡ | | | Total | Integ‡ | | | Total | Integ‡ | | | Total | Integ‡ | | | Total | Integ‡ | | | Total | Integ‡ | | | Total | Integ‡ | | | Total | Integ‡ | |
| **B5H0V24 Maximum Demand** | | | | | | | | | | | | | | | | | | | | | | | | | | | | | | | | |
| 65 (18.3) | | 12.3 | 11.3 | 1.4 | | 18.3 | 16.8 | 2.27 | | 20.6 | 18.8 | 2.45 | | 21.2 | 18.9 | 2.09 | | 22.2 | 20.2 | 1.89 | | 22.2 | 22.2 | 1.69 | | 23.2 | 23.2 | 1.55 | | 23.6 | 23.6 | 1.45 |
| 70 (21.1) | 635 | 12.2 | 11.2 | 1.47 | 690 | 18.1 | 16.7 | 2.37 | 690 | 20.6 | 18.7 | 2.58 | 700 | 21.2 | 18.7 | 2.19 | 700 | 22 | 20 | 1.98 | 700 | 22 | 22 | 1.78 | 700 | 23 | 23 | 1.64 | 700 | 23.2 | 23.2 | 1.52 |
| 75 (23.9) | | 12.1 | 11.1 | 1.52 | | 18.1 | 16.6 | 2.46 | | 20.4 | 18.6 | 2.67 | | 21 | 18.6 | 2.28 | | 21.8 | 19.9 | 2.06 | | 21.8 | 21.8 | 1.87 | | 22.6 | 22.6 | 1.72 | | 22.8 | 22.8 | 1.6 |
| **B5H0V24 Intermediate Demand** | | | | | | | | | | | | | | | | | | | | | | | | | | | | | | | | |
| 65 (18.3) | | 7.9 | 7.2 | 0.91 | | 10.9 | 10 | 1.22 | | 12.7 | 11.6 | 1.31 | | 13.6 | 12.1 | 1.19 | | 14.2 | 12.9 | 1.07 | | 15.8 | 15.8 | 1.1 | | 17.5 | 17.5 | 1.07 | | 17.8 | 17.8 | 1 |
| 70 (21.1) | 570 | 7.7 | 7.1 | 0.94 | 650 | 10.7 | 9.9 | 1.26 | 650 | 12.5 | 11.4 | 1.37 | 650 | 13.5 | 11.9 | 1.25 | 600 | 14.1 | 12.8 | 1.14 | 600 | 15.6 | 15.6 | 1.16 | 600 | 17.3 | 17.3 | 1.14 | 600 | 17.9 | 17.9 | 1.07 |
| 75 (23.9) | | 7.6 | 7 | 0.98 | | 10.6 | 9.8 | 1.33 | | 12.4 | 11.3 | 1.43 | | 13.3 | 11.8 | 1.31 | | 13.9 | 12.6 | 1.19 | | 15.4 | 15.4 | 1.23 | | 17.1 | 17.1 | 1.2 | | 17.6 | 17.6 | 1.14 |
| **B5H0V24 Minimum Demand** | | | | | | | | | | | | | | | | | | | | | | | | | | | | | | | | |
| 65 (18.3) | | 5.7 | 5.2 | 0.67 | | 6.9 | 6.4 | 0.79 | | 8.3 | 7.5 | 0.85 | | 9.8 | 8.7 | 0.84 | | 10.1 | 9.2 | 0.73 | | 12.3 | 12.3 | 0.82 | | 14.5 | 14.5 | 0.87 | | 15.6 | 15.6 | 0.86 |
| 70 (21.1) | 500 | 5.6 | 5.1 | 0.71 | 500 | 6.8 | 6.3 | 0.83 | 500 | 8.1 | 7.4 | 0.89 | 500 | 9.6 | 8.6 | 0.88 | 500 | 10 | 9.1 | 0.77 | 500 | 12.1 | 12.1 | 0.87 | 500 | 14.3 | 14.3 | 0.92 | 500 | 15.3 | 15.3 | 0.91 |
| 75 (23.9) | | 5.4 | 5 | 0.73 | | 6.7 | 6.2 | 0.87 | | 8 | 7.3 | 0.93 | | 9.5 | 8.4 | 0.93 | | 9.9 | 9 | 0.82 | | 11.9 | 11.9 | 0.92 | | 14.1 | 14.1 | 0.98 | | 15 | 15 | 0.96 |

Manufacturer reserves the right to change, at any time, specifications and designs without notice and without obligations.

# Heat Pump Heating Performance - Comfort Mode (Continued)

| INDOOR AIR °F (°C) | OUTDOOR ENTERING AIR TEMPERATURES °F (°C) | | | | | | | | | | | | | | | | | | | | | | | | | | | | | | | |
|---|---|---|---|---|---|---|---|---|---|---|---|---|---|---|---|---|---|---|---|---|---|---|---|---|---|---|---|---|---|---|---|---|
| | -3 (-19.4) | | | | 7 (-13.9) | | | | 17 (-8.3) | | | | 27 (-2.8) | | | | 37 (2.7) | | | | 47 (8.3) | | | | 57 (13.9) | | | | 67 (19.4) | | | |
| EDB | ID SCFM | Capacity | | Total Sys. KW** | ID SCFM | Capacity | | Total Sys. KW** | ID SCFM | Capacity | | Total Sys. KW** | ID SCFM | Capacity | | Total Sys. KW** | ID SCFM | Capacity | | Total Sys. KW** | ID SCFM | Capacity | | Total Sys. KW** | ID SCFM | Capacity | | Total Sys. KW** | ID SCFM | Capacity | | Total Sys. KW** |
| | | Total | Integ‡ | | | Total | Integ‡ | | | Total | Integ‡ | | | Total | Integ‡ | | | Total | Integ‡ | | | Total | Integ‡ | | | Total | Integ‡ | | | Total | Integ‡ | |
| **B5H0V36 Maximum Demand** | | | | | | | | | | | | | | | | | | | | | | | | | | | | | | | | |
| 65 (18.3) | | 18.4 | 17 | 2.14 | | 27.4 | 25.2 | 3.49 | | 31.8 | 29 | 3.85 | | 36.8 | 32.6 | 3.97 | | 38 | 34.8 | 3.42 | | 36 | 36 | 2.88 | | 36.2 | 36.2 | 2.61 | | 32.4 | 32.4 | 2.11 |
| 70 (21.1) | 975 | 18.3 | 16.9 | 2.23 | 975 | 27.4 | 25.2 | 3.65 | 985 | 32.2 | 29.2 | 4.07 | 1000 | 36.6 | 32.6 | 4.13 | 1000 | 40 | 36.2 | 3.69 | 1000 | 35.6 | 35.6 | 3.02 | 990 | 35.8 | 35.8 | 2.75 | 975 | 31.8 | 31.8 | 2.22 |
| 75 (23.9) | | 18.2 | 16.8 | 2.32 | | 27.4 | 25.2 | 3.79 | | 32 | 29.2 | 4.22 | | 36.6 | 32.4 | 4.29 | | 37.6 | 34.4 | 3.75 | | 35.2 | 35.2 | 3.15 | | 35.4 | 35.4 | 2.88 | | 31.4 | 31.4 | 2.34 |
| **B5H0V36 Intermediate Demand** | | | | | | | | | | | | | | | | | | | | | | | | | | | | | | | | |
| 65 (18.3) | | 11.4 | 10.5 | 1.29 | | 15.9 | 14.7 | 1.73 | | 19.1 | 17.4 | 1.9 | | 22 | 19.6 | 1.91 | | 23.6 | 21.6 | 1.82 | | 24.6 | 24.6 | 1.8 | | 26.2 | 26.2 | 1.74 | | 24.8 | 24.8 | 1.5 |
| 70 (21.1) | 650 | 15.8 | 14.5 | 1.68 | 650 | 15.8 | 14.5 | 1.81 | 650 | 18.9 | 17.3 | 1.99 | 650 | 21.8 | 19.4 | 2 | 650 | 23.8 | 21.8 | 1.93 | 670 | 24.4 | 24.4 | 1.9 | 700 | 26 | 26 | 1.84 | 700 | 24.4 | 24.4 | 1.59 |
| 75 (23.9) | | 15.6 | 14.4 | 1.75 | | 21 | 19.3 | 2.04 | | 21.2 | 19.4 | 2.11 | | 21.6 | 19.3 | 2.08 | | 23.2 | 21.2 | 2.01 | | 24 | 24 | 2 | | 25.6 | 25.6 | 1.93 | | 24 | 24 | 1.67 |
| **B5H0V36 Minimum Demand** | | | | | | | | | | | | | | | | | | | | | | | | | | | | | | | | |
| 65 (18.3) | | 8.1 | 7.5 | 0.93 | | 9.9 | 9.1 | 1.06 | | 12.1 | 11 | 1.15 | | 14.3 | 12.7 | 1.15 | | 16.7 | 15.2 | 1.21 | | 19.1 | 19.1 | 1.37 | | 21.2 | 21.2 | 1.39 | | 20.8 | 20.8 | 1.26 |
| 70 (21.1) | 550 | 8 | 7.4 | 0.98 | 550 | 9.8 | 9 | 1.11 | 550 | 12 | 10.9 | 1.21 | 550 | 14.1 | 12.6 | 1.21 | 550 | 16.5 | 15 | 1.28 | 550 | 18.9 | 18.9 | 1.44 | 550 | 21 | 21 | 1.48 | 550 | 20.4 | 20.4 | 1.33 |
| 75 (23.9) | | 7.8 | 7.2 | 1.01 | | 9.7 | 8.9 | 1.17 | | 11.8 | 10.8 | 1.27 | | 14 | 12.4 | 1.27 | | 16.3 | 14.8 | 1.35 | | 18.6 | 18.6 | 1.51 | | 20.6 | 20.6 | 1.55 | | 20.2 | 20.2 | 1.42 |

Manufacturer reserves the right to change, at any time, specifications and designs without notice and without obligations.

# Heat Pump Heating Performance - Comfort Mode (Continued)

| INDOOR AIR °F (°C) | OUTDOOR ENTERING AIR TEMPERATURES °F (°C) | | | | | | | | | | | | | | | | | | | | | | | | | | | | | | | |
|---|---|---|---|---|---|---|---|---|---|---|---|---|---|---|---|---|---|---|---|---|---|---|---|---|---|---|---|---|---|---|---|---|
| | -3 (-19.4) | | | | 7 (-13.9) | | | | 17 (-8.3) | | | | 27 (-2.8) | | | | 37 (2.7) | | | | 47 (8.3) | | | | 57 (13.9) | | | | 67 (19.4) | | | |
| EDB | ID SCFM | Capacity | | Total Sys. KW** | ID SCFM | Capacity | | Total Sys. KW** | ID SCFM | Capacity | | Total Sys. KW** | ID SCFM | Capacity | | Total Sys. KW** | ID SCFM | Capacity | | Total Sys. KW** | ID SCFM | Capacity | | Total Sys. KW** | ID SCFM | Capacity | | Total Sys. KW** | ID SCFM | Capacity | | Total Sys. KW** |
| | | Total | Integ‡ | | | Total | Integ‡ | | | Total | Integ‡ | | | Total | Integ‡ | | | Total | Integ‡ | | | Total | Integ‡ | | | Total | Integ‡ | | | Total | Integ‡ | |
| **B5H0V48 Maximum Demand** | | | | | | | | | | | | | | | | | | | | | | | | | | | | | | | | |
| 65 (18.3) | | 21.4 | 19.6 | 2.43 | | 38.5 | 35.4 | 4.31 | | 45.5 | 41.5 | 4.8 | | 52 | 46.5 | 4.92 | | 55.5 | 50.5 | 4.76 | | 48.5 | 48.5 | 3.88 | | 47.5 | 47.5 | 3.41 | | 43 | 43 | 2.84 |
| 70 (21.1) | 1040 | 21.2 | 19.4 | 2.55 | 1200 | 38.5 | 35.2 | 4.51 | 1240 | 45.5 | 41.5 | 5.01 | 1340 | 52 | 46 | 5.15 | 1420 | 55 | 50 | 4.94 | 1300 | 48 | 48 | 4.07 | 1450 | 47 | 47 | 3.59 | 1450 | 42.5 | 42.5 | 3.01 |
| 75 (23.9) | | 21 | 19.3 | 2.63 | | 38 | 35 | 4.68 | | 45.5 | 41.5 | 5.25 | | 51.5 | 46 | 5.35 | | 55.5 | 46.5 | 4.7 | | 51 | 47 | 4.11 | | 46.5 | 46.5 | 3.74 | | 42 | 42 | 3.16 |
| **B5H0V48 Intermediate Demand** | | | | | | | | | | | | | | | | | | | | | | | | | | | | | | | | |
| 65 (18.3) | | 17.2 | 15.9 | 1.92 | | 25.4 | 23.2 | 2.64 | | 30.4 | 27.8 | 2.91 | | 34.6 | 30.6 | 2.93 | | 37.2 | 33.8 | 2.9 | | 34.6 | 34.6 | 2.6 | | 33.4 | 33.4 | 2.26 | | 31.2 | 31.2 | 1.9 |
| 70 (21.1) | 850 | 17.1 | 15.7 | 2.02 | 850 | 25.2 | 23 | 2.76 | 870 | 30.2 | 27.4 | 3.05 | 900 | 34.2 | 30.4 | 3.06 | 950 | 36.8 | 33.6 | 3.05 | 950 | 34.2 | 34.2 | 2.74 | 950 | 33 | 33 | 2.38 | 1000 | 31.4 | 31.4 | 2.04 |
| 75 (23.9) | | 16.9 | 15.5 | 2.1 | | 25 | 23 | 2.88 | | 29.8 | 27.2 | 3.16 | | 34 | 30.2 | 3.19 | | 36.6 | 33.2 | 3.19 | | 33.8 | 33.8 | 2.86 | | 32.6 | 32.6 | 2.5 | | 30.8 | 30.8 | 2.15 |
| **B5H0V48 Minimum Demand** | | | | | | | | | | | | | | | | | | | | | | | | | | | | | | | | |
| 65 (18.3) | | 15.1 | 13.9 | 1.69 | | 19 | 17.5 | 1.97 | | 23 | 21 | 2.16 | | 26.4 | 23.4 | 2.19 | | 29.4 | 26.8 | 2.26 | | 27.2 | 27.2 | 1.96 | | 27.2 | 27.2 | 1.76 | | 25.8 | 25.8 | 1.49 |
| 70 (21.1) | 800 | 14.9 | 13.7 | 1.76 | 800 | 18.8 | 17.3 | 2.07 | 800 | 22.8 | 20.8 | 2.27 | 800 | 26 | 23.2 | 2.28 | 800 | 29 | 26.4 | 2.36 | 800 | 26.8 | 26.8 | 2.07 | 800 | 26.8 | 26.8 | 1.86 | 800 | 25.4 | 25.4 | 1.58 |
| 75 (23.9) | | 14.7 | 13.5 | 1.84 | | 18.6 | 17.1 | 2.16 | | 22.4 | 20.4 | 2.36 | | 25.8 | 22.8 | 2.39 | | 28.8 | 26.2 | 2.48 | | 26.4 | 26.4 | 2.17 | | 26.4 | 26.4 | 1.96 | | 25 | 25 | 1.69 |

Manufacturer reserves the right to change, at any time, specifications and designs without notice and without obligations.

# Heat Pump Heating Performance - Comfort Mode (Continued)

| INDOOR AIR °F (°C) | OUTDOOR ENTERING AIR TEMPERATURES °F (°C) | | | | | | | | | | | | | | | | | | | | | | | | | | | | | | | |
|---|---|---|---|---|---|---|---|---|---|---|---|---|---|---|---|---|---|---|---|---|---|---|---|---|---|---|---|---|---|---|---|---|
| | -3 (-19.4) | | | | 7 (-13.9) | | | | 17 (-8.3) | | | | 27 (-2.8) | | | | 37 (2.7) | | | | 47 (8.3) | | | | 57 (13.9) | | | | 67 (19.4) | | | |
| EDB | ID SCFM | Capacity | | Total Sys. KW** | ID SCFM | Capacity | | Total Sys. KW** | ID SCFM | Capacity | | Total Sys. KW** | ID SCFM | Capacity | | Total Sys. KW** | ID SCFM | Capacity | | Total Sys. KW** | ID SCFM | Capacity | | Total Sys. KW** | ID SCFM | Capacity | | Total Sys. KW** | ID SCFM | Capacity | | Total Sys. KW** |
| | | Total | Integ‡ | | | Total | Integ‡ | | | Total | Integ‡ | | | Total | Integ‡ | | | Total | Integ‡ | | | Total | Integ‡ | | | Total | Integ‡ | | | Total | Integ‡ | |
| **B5H0V60 Maximum Demand** | | | | | | | | | | | | | | | | | | | | | | | | | | | | | | | | |
| 65 (18.3) | | 32.8 | 30.2 | 3.73 | | 44.5 | 41 | 4.76 | | 54 | 49 | 5.35 | | 62.5 | 55.5 | 5.55 | | 64 | 58.5 | 5.79 | | 60.5 | 60.5 | 5.61 | | 55 | 55 | 4.33 | | 46.5 | 46.5 | 2.98 |
| 70 (21.1) | 1040 | 32.6 | 30 | 3.92 | 1240 | 44.5 | 40.5 | 5.02 | 1440 | 53.5 | 49 | 5.56 | 1620 | 62 | 55 | 5.79 | 1650 | 63.5 | 58 | 6.04 | 1690 | 60 | 60 | 5.9 | 1520 | 54 | 54 | 4.55 | 1200 | 45.5 | 45.5 | 3.13 |
| 75 (23.9) | | 32.4 | 29.8 | 4.06 | | 44 | 40.5 | 5.16 | | 53.5 | 48.5 | 5.81 | | 61.5 | 54.5 | 6.05 | | 63 | 57.5 | 6.32 | | 59 | 59 | 6.13 | | 53.5 | 53.5 | 4.78 | | 45 | 45 | 3.33 |
| **B5H0V60 Median Demand** | | | | | | | | | | | | | | | | | | | | | | | | | | | | | | | | |
| 65 (18.3) | | 21.8 | 20 | 2.4 | | 29.4 | 27 | 2.93 | | 35.4 | 32.2 | 3.18 | | 40.5 | 36 | 3.23 | | 40 | 36.4 | 3.19 | | 37.2 | 37.2 | 2.96 | | 33.6 | 33.6 | 2.23 | | 29.4 | 29.4 | 1.52 |
| 70 (21.1) | 810 | 21.4 | 19.8 | 2.51 | 880 | 29 | 26.8 | 3.06 | 945 | 35 | 32 | 3.33 | 1010 | 40 | 35.6 | 3.37 | 1020 | 39.5 | 36 | 3.35 | 1030 | 36.6 | 36.6 | 3.14 | 970 | 33.2 | 33.2 | 2.37 | 870 | 28.8 | 28.8 | 1.64 |
| 75 (23.9) | | 21.2 | 19.5 | 2.61 | | 28.8 | 26.4 | 3.2 | | 34.6 | 31.6 | 3.47 | | 39.5 | 35.2 | 3.51 | | 39 | 35.4 | 3.51 | | 36 | 36 | 3.28 | | 32.6 | 32.6 | 2.51 | | 28.2 | 28.2 | 1.74 |
| **B5H0V60 Minimum Demand** | | | | | | | | | | | | | | | | | | | | | | | | | | | | | | | | |
| 65 (18.3) | | 16.1 | 14.8 | 1.79 | | 19.8 | 18.2 | 1.92 | | 23.6 | 21.6 | 2.03 | | 27.2 | 24.2 | 2.07 | | 27.4 | 25 | 2.09 | | 25 | 25 | 1.89 | | 23.4 | 23.4 | 1.44 | | 21.2 | 21.2 | 1 |
| 70 (21.1) | 700 | 15.8 | 14.6 | 1.87 | 700 | 19.5 | 17.9 | 2.01 | 700 | 23.2 | 21.2 | 2.12 | 700 | 27 | 24 | 2.19 | 700 | 27 | 24.6 | 2.2 | 700 | 24.6 | 24.6 | 2 | 700 | 22.8 | 22.8 | 1.53 | 700 | 20.6 | 20.6 | 1.08 |
| 75 (23.9) | | 15.6 | 14.3 | 1.95 | | 19.2 | 17.6 | 2.1 | | 23 | 21 | 2.23 | | 26.6 | 23.6 | 2.28 | | 26.6 | 24.2 | 2.32 | | 24.2 | 24.2 | 2.11 | | 22.4 | 22.4 | 1.63 | | 20.2 | 20.2 | 1.17 |

**NOTES**:
** The kW values include the compressor, outdoor fan motor, and indoor blower motor. The kW from supplement heaters should be added to these values to obtain Total Sys. kilowatts.
} The Btuh heating capacity values shown are net integrated values from which the defrost effect has been subtracted. The Btuh heating from supplement heaters should be added to those values to obtain Total Sys. capacity.
NOTE: When the required data falls between the published data, interpolation may be performed. Extrapolation is not an acceptable practice.
EDB — Entering Dry Bulb

Manufacturer reserves the right to change, at any time, specifications and designs without notice and without obligations.

# Guide specifications
# General

**AIR-COOLED, SPLIT-SYSTEM HEAT PUMP**
**B5H0V**
**2 TO 5 NOMINAL TONS**

## System Description

Outdoor-mounted, air-cooled, split-system heat pump unit suitable for ground or rooftop installation. Unit consists of a hermetic compressor, an air-cooled coil, forward-swept blade propeller-type condenser fan, and a control box. Unit will discharge supply air upward as shown on contract drawings. Unit will be used in a refrigeration circuit to match up to a packaged fan coil or coil unit.

## Quality Assurance

- Unit will be rated in accordance with the latest edition of AHRI Standard 240.
- Unit will be certified for capacity and efficiency, and listed in the latest AHRI directory.
- Unit construction will comply with latest edition of ASHRAE and with NEC.
- Unit will be constructed in accordance with UL standards and will carry the UL label of approval. Unit will have C-UL approval.
- Unit cabinet will be capable of withstanding Federal Test Method Standard No. 141 (Method 6061) 500-hr salt spray test.
- Air-cooled condenser coils are pressure tested and the outdoor units are leak tested.
- Unit constructed in ISO9001 approved facility.

## Delivery, Storage, and Handling

- Unit will be shipped as single package only and is stored and handled per unit manufacturer's recommendations.

## Warranty (for inclusion by specifying engineer)

- U.S. and Canada only.

# PRODUCTS

## Equipment

- Factory-assembled, single-piece, air-cooled heat pump. Contained within the unit enclosure is all factory wiring, piping, controls, compressor, refrigerant charge R-454B refrigerant, and special features required prior to field start-up.

## Unit Cabinet

- Unit cabinet will be constructed of galvanized steel, bonderized, and coated with a powder coat paint.

## Fans

- Condenser fan will be direct-drive propeller type, forward swept blade, discharging air upward.
- Condenser fan motors will be totally enclosed, 1-phase type with class B insulation and permanently lubricated.
- Fan blades will be statically and dynamically balanced.
- Condenser fan openings will be equipped with coated steel wire safety guards.

## Compressor

- Compressor will be hermetically sealed.
- Compressor will be mounted on rubber vibration isolators.
- Compressor will be covered with a sound absorbing blanket.

## Condenser Coil

- Condenser coil will be air cooled.
- Coil will be constructed of aluminum fins mechanically bonded to copper or aluminum tubes which are then cleaned, dehydrated, and sealed.

## Refrigeration Components

- Refrigeration circuit components will include liquid-line and vapor line front-seating shutoff valve with provisions for sweat or mechanical connections, system charge of R-454B refrigerant, PVE compressor oil, accumulator, electronic expansion valve, reversing valve, and pressure equalization valve.
- Unit will be equipped with high-pressure switch, suction and discharge pressure transducers, and filter drier for R-454B refrigerant.

## Operating Characteristics

- The capacity of the unit will meet or exceed _____ Btuh at a suction temperature of _____ °F (°C). The power consumption at full load will not exceed _____ kW.
- Combination of the unit and the evaporator or fan coil unit will have a total net cooling capacity of _____ Btuh or greater at conditions of _____ CFM entering air temperature at the evaporator at _____ °F (°C) wet bulb and _____ °F (°C) dry bulb, and air entering the unit at _____ °F (°C).
- The system will have a SEER2 of _____ Btuh/watt or greater at DOE conditions.

## Electrical Requirements

- Nominal unit electrical characteristics will be _____ v, single phase, 60 hz. The unit will be capable of satisfactory operation within voltage limits of _____ v to _____ v.
- Unit electrical power will be single point connection.
- Control circuit will be 24v.

## Special Features

- Refer to section of this literature identifying accessories and descriptions for specific features and available enhancements.
- Ion™ Black System Control with appropriate software version is required for full featured operation.

## System Design Summary

1. System must be installed with factory approved R454B Indoor unit only.
2. Factory authorized dissipation control board must be installed with indoor unit.
3. Must use Ion™ Black System Control listed in pre-sale literature only
4. Intended for outdoor installation with free air inlet and outlet. Outdoor fan external static pressure available is less than 0.01-in. wc.
5. This product is qualified for low ambient cooling operation (below 55°F / 12.8°C) with an Ion™ Black System Control **ONLY**.
6. The maximum outdoor operating ambient in cooling mode is 125°F (51.7°C).
7. Minimum outdoor operating air temperature for heating mode is –11°F (–23.9°C).
8. For reliable operation, unit should be level in all horizontal planes.
9. For interconnecting refrigerant tube lengths greater than 80 ft (23.4 m) and/or elevation differences between indoor and outdoor units greater than 20 ft (6.1 m), consult Residential Piping and Long Line Guideline and Service Manual available from equipment distributor.
10. If any refrigerant tubing is buried, provide a 6 in. (152.4 mm) vertical rise to the valve connections at the unit. Refrigerant tubing lengths up to 36 in. (914.4 mm) may be buried without further consideration. Do not bury refrigerant lines longer than 36 in. (914.4 mm).
11. Use only copper wire for electrical connection at unit. Aluminum and clad aluminum are not acceptable for the type of connector provided.
12. Do not apply capillary tube indoor coils to these units.
13. Factory-supplied filter drier must be installed.

© 2026 Carrier. All rights reserved.

**Manufacturer reserves the right to change, at any time, specifications and designs without notice and without obligations.**