GH7T
2-Stage Heat Pump with Puron® Refrigerant 2 To 5 Tons

Turn to the experts

Product Data

This unit has been designed utilizing Puron refrigerant. The environmentally sound refrigerant allows you to make a responsible decision in the protection of the earth's ozone layer.

NOTE: Ratings contained in this document are subject to change at any time. Always refer to the AHRI directory (www.ahridirectory.org) for the most up-to-date ratings information.

Industry leading Features / Benefits

Efficiency

- Up to 17.0 SEER2 (18.5 SEER) / Up to 13.0 EER2 (14 EER) / Up to 8.1 HSPF2 (9.5 HSPF)
- Indoor air quality accessories available

Sound

- Sound level as low as 70 dBA

Comfort

- System supports Thermidistat or standard 2-stage thermostat controls

Reliability

- Puron refrigerant - environmentally sound, won't deplete the ozone layer and low lifetime service cost.
- Front-seating service valves
- 2-stage scroll compressor
- Internal pressure relief valve
- Internal thermal overload
- Low pressure switch
- Filter drier
- Balanced refrigeration system for maximum reliability

Durability

- Protection Package: Solid, Durable sheet metal construction
- Pre-painted cabinet finish over galvanized steel

Applications

- Long-line - up to 250 feet (76.2 m) total equivalent length, up to 200 feet (60.96 m) condenser above evaporator, or up to 80 ft. (24.38 m) evaporator above condenser (See Longline Guide for more information.)
- Low ambient cooling (down to 0°F / -17.8°C) with approved low ambient accessory kits.

Limited Warranty

- Default 5-year parts limited warranty (including compressor and coil)
  - 10-year parts limited warranty (including compressor and coil) with timely registration*.
    Equipment must be registered within 90 days of original installation, except in jurisdictions where warranty benefits cannot be conditioned on registration.

* Applies to original purchaser/homeowner and not available to subsequent owners except in jurisdictions where applicable laws dictate otherwise.

See warranty certificate for complete details and restrictions

STANDARD FEATURES

FEATURES	Unit Size			
	24	36	48	60
Puron Refrigerant	X	X	X	X
Maximum SEER2 (SEER) Rating*	17.0 (18.5)	17.0 (17.5)	17.0 (18.0)	16.0 (17.0)
2-Stage Scroll Compressor	X	X	X	X
Low Ambient Cooling Capability with Approved Kits	X	X	X	X
Crankcase Heater w/Temperature Switch	X	X	X	X
Field Installed Filter Drier	X	X	X	X
Front Seating Service Valves	X	X	X	X
Internal Pressure Relief Valve	X	X	X	X
Internal Thermal Overload	X	X	X	X
Long Line capability	X	X	X	X

X = Standard
* With approved combinations

MODEL NUMBER NOMENCLATURE

1	2	3	4	5	6	7	8, 9	10	11	12
G	**H**	**7**	**T**	**A**	**N**	**4**	**24**	**0**	**0**	**A**
Branding	**OD Type**	**SEER2**	**OD Design Type**	**Major Series**	**Voltage**	**Refrigerant**	**Nominal Capacity**	**Feature**	**Special Feature**	**Region**
G = Generic	**H** = HP	**7** = 17 SEER2	**T**=2-Stage	**A-Z** = Major Iteration	**N** = 208-230-1	**4** = R410A	**24** = 24,000 BTUH (2 Tons) **36** = 36,000 BTUH (3 Tons) **48** = 48,000 BTUH (4 Tons) **60** = 50,000 BTUH (5 Tons)	**0** = Standard	**0** =Standard	Standard HP

PHYSICAL DATA

UNIT SIZE	24	36	48	60
Compressor Type	Scroll			
Refrigerant	Puron® (R-410A)			
Control	TXV Puron (R-410A) Hard Shutoff)			
Charge lb (kg)	13.29 (6.03)	14.84 (6.73)	14.67 (6.65)	15.45 (7.01)
Outdoor Htg Piston #	46	55	61	67
COND Fan	Propeller Type, Direct Drive			
Air Discharge	Vertical			
Air Qty (CFM)	3158	3158	4779	5000
Motor HP	1/12	1/12	1/4	1/4
Motor RPM	800	800	800	800
COND COIL				
Face Area (Sq ft)	22.6	25.1	30.1	30.1
Fins per In.	20	20	20	20
Rows	2	2	2	2
Circuits	9	8	12	12
VALVE CONNECT. (In. ID)				
Vapor	3/4	7/8	7/8	7/8
Liquid	3/8"			
REFRIGERANT TUBES* (In. OD)				
Vapor (0-80 Ft Tube Length)	3/4	7/8	1 1/8	1 1/8
Liquid (0-80 Ft Tube Length)	3/8"			

*. Units are rated with 25 ft (7.6 m) of lineset length. See Vapor Line Sizing and Cooling Capacity Loss table when using other sizes and lengths of lineset.

CATALOG ORDERING NUMBERS

Size	Model Ordering Number
24	GH7TAN42400A
36	GH7TAN43600A
48	GH7TAN44800A
60	GH7TAN46000A

Use of the AHRI Certified TM Mark indicates a manufacturer's participation in the program For verification of certification for individual products, go to www.ahridirectory.org.

Quality ISO 9001

REFRIGERANT PIPING LENGTH LIMITATIONS

Liquid Line Sizing and Maximum Total Equivalent Lengths{ for Cooling Only Systems with Puron® Refrigerant:

The maximum allowable length of a residential split system depends on the liquid line diameter and vertical separation between indoor and outdoor units.

See Table below for liquid line sizing and maximum lengths :

Table 1 – Maximum Total Equivalent Length
Outdoor Unit BELOW Indoor Unit

Size	Liquid Line Connection	Liquid Line Diam. w/TXV	HP with Puron Refrigerant Maximum Total Equivalent Length†: Outdoor unit BELOW Indoor Vertical Separation ft (m)								
			0-5 (0-1.5)	6-10 (1.8-3.0)	11-20 (3.4-6.1)	21-30 (6.4-9.1)	31-40 (9.4-12.2)	41-50 (12.5-15.2)	51-60 (15.5-18.3)	61-70 (18.6-21.3)	71-80 (21.6-24.4)
24	3/8	1/4	75	75	75	50	50	--	--	--	--
		5/16	250*	250*	250*	250*	250*	225*	175	125	100
		3/8	250*	250*	250*	250*	250*	250*	250*	250*	250*
36	3/8	5/16	175	150	150	100	100	100	75	--	--
		3//8	250*	250*	250*	250*	250*	250*	250*	250*	250*
48	3/8	3/8	250*	250*	250*	250*	250*	250*	230	160	--
60	3/8	3/8	250*	250*	250*	225*	190	150	110	--	--

* Maximum actual length not to exceed 200 ft (61 m)
†Total equivalent length accounts for losses due to elbows or fitting. See the Long Line Guideline for details.
-- = outside acceptable range

Table 2 – Maximum Total Equivalent Length
Outdoor Unit ABOVE Indoor Unit

Size	Liquid Line Connection	Liquid Line Diam. w/TXV	HP with Puron Refrigerant Maximum Total Equivalent Length†: Outdoor unit ABOVE Indoor Vertical Separation ft (m)							
			25 (7.6)	**26-50 (7.9-15.2)**	**51-75 (15.5-22.9)**	**76-100 (23.2-30.5)**	**101-125 (30.8-38.1)**	**126-150 (38.4-45.7)**	**151-175 (46.0-53.3)**	**176-200 (53.6-61.0)**
24	3/8	1/4	100	125	175	200	225*	250*	250*	250*
		5/16	250*	250*	250*	250*	250*	250*	250*	250*
		3/8	250*	250*	250*	250*	250*	250*	250*	250*
36	3/8	5/16	225*	250*	250*	250*	250*	250*	250*	250*
		3/8	250*	250*	250*	250*	250*	250*	250*	250*
48	3/8	3/8	250*	250*	250*	250*	250*	250*	250*	250*
60	3/8	3/8	250*	250*	250*	250*	250*	250*	250*	250*

* Maximum actual length not to exceed 200 ft (61 m)
†Total equivalent length accounts for losses due to elbows or fitting. See the Long Line Guideline for details.

Table 3 – Refrigerant Charge Adjustments

Liquid Line Size	Puron Charge oz/ft (g/m)
3/8	0.60 (17.74) (Factory charge for lineset = 9 oz / 266.16 g)
5/16	0.40 (11.83)
1/4	0.27 (7.98)

Units are factory charged for 15 ft (4.6 m) of 3/8" liquid line. The factory charge for 3/8" lineset 9 oz.(266.16 g). When using other length or diameter liquid lines, charge adjustments are required per the chart above.

Charging Formula:

[(Lineset oz/ft x total length) – (factory charge for lineset)] = charge adjustment

Example 1: System has 15 ft of line set using existing 1/4" liquid line. What charge adjustment is required?

Formula:(.27 oz/ft x 15ft) – (9 oz) = (-4.95) oz.

Net result is to remove 4.95 oz of refrigerant from the system

Example 2: System has 45 ft of existing 5/16" liquid line. What is the charge adjustment?

Formula:(.40 oz/ft. x 45ft) – (9 oz.) = 9 oz.

Net result is to add 9 oz of refrigerant to the system

NOTE: Conditions must be favorable for charging by subcooling method. Indoor temperature must be 70°F to 80°F (21.1°C to 26.7°C), and outdoor temperature must be 70°F to 100°F (21.1°C to 37.8°C). If outside these conditions, adjust charge for long line sets by weigh-in method.

Manufacturer reserves the right to change, at any time, specifications and designs without notice and without obligations.

LONG LINE APPLICATIONS

An application is considered Long Line, when the refrigerant level in the system requires the use of accessories to maintain acceptable refrigerant management for systems reliability. See Accessory Usage Guideline table for required accessories. Defining a system as long line depends on the liquid line diameter, actual length of the tubing, and vertical separation between the indoor and outdoor units.

For heat pump systems, the chart below shows when an application is considered Long Line.

Table 4 – HP with Puron **Refrigerant Long Line Description ft (m) Beyond these lengths, a TXV is required**

Total Length	Outdoor Unit Above or Below Indoor Unit
TXV required beyond 50 ft. (15.2 m)	TXV required beyond 20 ft. (6.1 m)

Table 5 – HP with Puron Refrigerant Long Line Description ft (m) (Beyond these lengths, long line accessories are required)

Liquid Line Size	Units On Same Level	Outdoor Below Indoor	Outdoor Above Indoor
1/4 + TXV	No accessories needed within allowed lengths	No accessories needed within allowed lengths	175 (53.3)
5/16 + TXV	120 (36.6)	50 (15.2) vertical or 120 (36.6) total	120 (36.6)
3/8 + TXV	80 (24.4)	35 (10.7) vertical or 80 (24.4) total	80 (24.4)

NOTE: See Residential Piping and Long Line Guideline for details

VAPOR LINE SIZING AND COOLING CAPACITY LOSS

Acceptable vapor line diameters provide adequate oil return to the compressor while avoiding excessive capacity loss. The suction line diameters shown in the chart below are acceptable for HP systems with Puron refrigerant:

Unit Nominal Size (Btuh)	Maximum Liquid Line Diameters (In. OD)	Vapor Line Diameters (In.) OD	Cooling Capacity Loss (%) Total Equivalent Line Length ft. (m)								
			Standard Application		Long Line Application Requires Accessories						
			26-50 (7.9-15.2)	51-80 (15.5-24.4)	81-100 (24.7-30.5)	101-125 (30.8-38.1)	126-150 (38.4-45.7)	151-175 (46.0-50.3)	176-200 (53.6-60.0)	201-225 (61.3-68.6)	226-250 (68.9-76.2)
24,000 2-Stage HP with Puron	3/8	5/8	0	1	1	2	3	3	4	4	5
		3/4	0	1	1	1	1	1	1	1	1
36,000 2-Stage HP with Puron	3/8	5/8	1	2	4	5	6	7	9	10	11
		3/4	0	0	1	1	2	2	3	3	4
		7/8	0	0	—	—	—	—	—	—	—
48,000 2-Stage HP with Puron	3/8	3/4	1	2	2	3	4	5	6	7	7
		7/8	0	1	1	2	2	2	3	3	4
		1-1/8	0	0	—	—	—	—	—	—	—
60,000 2-Stage HP with Puron	3/8	3/4	1	2	4	5	6	8	9	10	11
		7/8	0	1	2	2	3	4	4		55
		1-1/8	0	0	—	—	—	—	—	—	—

Standard Length = 80 ft. (24.4 m) or less total equivalent length

Applications in this area are long line. Accessories are required as shown recommended on Long Line Application Guidelines

Applications in this area may have height restrictions that limit allowable total equivalent length, when outdoor unit is below indoor unit.

— Applications in this area are not recommended due to insufficient oil return.

AHRI RATINGS

For AHRI ratings certificates, please refer to the AHRI directory www.ahridirectory.org
Additional ratings and system combinations can be accessed via the Ratings Database here: database herewww.MyCarrierRatings.com

Electrical Data

UNIT SIZE	V/PH	OPER VOLTS*		COMPR		FAN	MCA	MAX FUSE† or CKT BRK AMPS
		MAX	MIN	LRA	RLA	FLA		
24	208-230/1	253	197	61.0	10.9	0.50	14.1	25
36				92.0	19.7	0.60	25.2	40
48				126.5	25.8	1.20	33.5	50
60				158.0	26.9	1.50	35.1	60

* Permissible limits of the voltage range at which the unit will operate satisfactorily
† Time-Delay fuse.
FLA- Full Load Amps
LRA - Locked Rotor Amps
MCA- Minimum Circuit Amps
RLA- Rated Load Amps
NOTE: Control circuit is 24-V on all units and requires external power source. Copper wire must be used from service disconnect to unit.
All motors/compressors contain internal overload protection.
Complies with 2010 requirements of ASHRAE Standards 90.1
Short Circuit Current Rating (SCCR): 5kA rms

A-Weighted Sound Power (dBA) w/o Accessory Sound Shield)

UNIT SIZE	STANDARD RATING	TYPICAL OCTAVE BAND SPECTRUM (without tone adjustment)						
		125	250	500	1000	2000	4000	8000
24	73 - High Stage	64.7	64.4	62.4	65.6	61.7	57.9	58.0
	70 - Low Stage	66.2	63.5	62.6	64.4	59.0	59.5	54.6
36	74 - High Stage	66.9	65.4	65.8	65.5	60.4	58.9	52.8
	71 - Low Stage	65.8	66.5	64.7	64.8	62.4	59.7	55.6
48	75 - High Stage	68.5	65.2	66.3	66.4	63.2	61.3	58.7
	71 - Low Stage	67.2	64.8	66.2	65.1	63.6	62.5	57.3
60	74 - High Stage	69.0	66.3	69.5	69.5	64.8	61.3	55.9
	73 - Low Stage	69.2	65.8	69.1	68.0	64.5	60.9	55.5

A-Weighted Sound Power (dBA) with Accessory Sound Shield)

UNIT SIZE	STANDARD RATING	TYPICAL OCTAVE BAND SPECTRUM (without tone adjustment)						
		125	250	500	1000	2000	4000	8000
24	71 - High Stage	65.4	64.3	63.0	65.0	61.8	56.7	53.3
	70 - Low Stage	65.6	62.9	62.5	61.8	57.1	56.6	50.3
36	72 - High Stage	65.1	65.9	64.8	63.5	59.8	58.1	51.5
	70 - Low Stage	65.7	67.0	64.2	63.7	61.0	58.5	53.1
48	74 - High Stage	69.0	65.2	66.0	65.8	62.3	59.6	56.0
	70 - Low Stage	69.9	65.1	65.6	64.2	63.4	59.7	53.9
60	73 - High Stage	69.5	65.4	68.5	68.6	63.9	60.0	54.1
	72 - Low Stage	69.4	66.1	68.4	67.7	64.3	59.6	53.8

NOTE: Tested in compliance with AHRI Standard 270 but not listed with AHRI.

Charging Subcooling (TXV-Type Expansion Device)

UNIT SIZE	REQUIRED SUBCOOLING °F (°C)
24	11 (6.1)
36	16 (8.9)
48	9 (5.0)
60	12 (6.7)

Accessories

Kit Number	KIT NAME	24	36	48	60
KSAFT0101AAA	Evaporator Freeze Stat	X	X	X	X
KAATD0101TDR	Time Delay Relay	X	X	X	X
KSALA0301410	Low Ambient	X	X	X	X
KSALA1001AAA	MotorMaster	X	X	X	X
KHAIR0201AAA	Isolation Relay	X	X	X	X
KSAHS2501AAA	Hard Start	X	X		
KSAHS2801AAA	Hard Start			X	X
KSACY0101AAA	Cycle Protection	X	X	X	X
KSASF0201AAA	Support Feet	X	X	X	X
KHALS0401LLS	Solenoid Valve	X	X	X	X
KSASH2301COP	Sound Blanket	X	X		
KSASH2401COP	Sound Blanket			X	X
KHASS0606MPK	Snow Stand	X	X	X	X
KSAHI0401PUR	High Pressure Switch Kit	X	X	X	X

X = Accessory

ACCESSORY USAGE GUIDELINE

Accessory	Required for Low Ambient cooling Applications (Below 55°F / 12.8°C)	Required for Long Line Applications*	Required for Sea Coast Applications (within 2 miles/3.2 km)
Compressor Start Assist	Yes	Yes	No
Crankcase Heater	Standard	Standard	Standard
Evaporator Freeze Thermostat	Yes	No	No
Isolation Relay	Yes	No	No
Hard Shutoff TXV	Yes (standard w/factory approved indoor unit)	Yes (standard w/factory approved indoor unit)	Yes (standard w/factory approved indoor unit)
Liquid Line Solenoid Valve	No	See Residential Piping and Long Line Guideline	No
Low-Ambient Control	Yes	No	No
Support Feet	Recommended	No	Recommended

* For tubing line sets between 80 and 200 ft. (24.38 and 60.96 m) and/or 20 ft. (6 m) vertical differential, refer to Residential Piping and Longline Guideline.

Accessory Description and Usage (Listed Alphabetically)

1. Compressor Start Assist -- Capacitor and Relay

Start capacitor and relay gives a ”hard” boost to compressor motor at each start up.

Usage Guideline:

Required for reciprocating compressors in the following applications:

Long line

Low ambient cooling

Hard shut off expansion valve on indoor coil

Liquid line solenoid on indoor coil

Required for single--phase scroll compressors in the following applications:

Long line

Low ambient cooling

Suggested for all compressors in areas with a history of low voltage problems.

2. Crankcase Heater

An electric resistance heater which mounts to the base of the compressor to keep the lubricant warm during off cycles. Improves compressor lubrication on restart and minimizes the chance of liquid slugging.

Usage Guideline:

Required in low ambient cooling applications.

Required in long line applications.

Suggested in all commercial applications.

3. Evaporator Freeze Thermostat

An SPST temperature-actuated switch that stops unit operation when evaporator reaches freeze-up conditions.

Usage Guideline:

Required when low ambient kit has been added.

4. Liquid-Line Solenoid Valve (LLS)

An electrically operated shutoff valve which stops and starts refrigerant liquid flow in response to compressor operation. It is to be installed at the outdoor unit to control refrigerant off cycle migration in the heating mode.

Usage Guideline:

An LLS is required in all long line heat pump applications to control refrigerant off cycle migration inthe heating mode. See Long Line Guideline.

Suggested for all commercial applications.

5. Low-Ambient Pressure Switch

A long life pressure switch which is mounted to outdoor unit service valve. It is designed to cycle the outdoor fan motor in order to maintain head pressure within normal operating limits. The control will maintain working head pressure at low-ambient temperatures down to 0°F (-17.8°C) when properly installed.

Usage Guideline:

A Low-Ambient Pressure Switch must be used when cooling operation is used at outdoor temperatures below 55°F (12.8°C).

6. Support Feet

Four or five stick--on plastic feet that raise the unit 4 in. (101.6 mm) above the mounting pad. This allows sand, dirt, and other debris to be flushed from the unit base, minimizing corrosion.

Usage Guideline:

Suggested in the following applications:

Coastal installations.

Windy areas or where debris is normally circulating.

Rooftop installations.

For improved sound ratings.

7. Thermostatic Expansion Valve (TXV)

A modulating flow-control valve which meters refrigerant liquid flow rate into the evaporator in response to the superheat of the refrigerant gas leaving the evaporator.

Kit includes valve, adapter tubes, and external equalizer tube. Hard shut off types are available.

NOTE: When using a hard shut off TXV with single phase reciprocating compressors, a Compressor Start Assist Capacitor and Relay is required.

Usage Guideline:

Required to achieve AHRI ratings in certain equipment combinations. Refer to combination ratings.

Hard shut off TXV or LLS required in heat pump long line applications.

8. Winter Start Control

This control is designed to alleviate nuisance opening of the low-pressure switch by bypassing it for the first 3 minutes of operation.

DIMENSIONS

UNIT	SERIES	ELECTRICAL CHARACTERISTICS				A		B		C		D		E		F		G		H		I		J		K		OPERATING WEIGHT		SHIPPING WEIGHT		SHIPPING LENGTH / WIDTH (Sq.)		SHIPPING HEIGHT	
						INCH	MM	INCH	MM	INCH	MM	INCH	MM	INCH	MM	INCH	MM	INCH	MM	INCH	MM	INCH	MM	INCH	MM	INCH	MM	Lbs	Kgs	Lbs	Kgs	INCH	MM	INCH	MM
GH7TA*42400A	A	Y	N	N	N	35	889.0	35 1/2	901.4	3/4	19.1	6 9/16	166.1	28 7/16	722.8	9 1/8	231.3	1 1/8	28.2	3 13/16	97.4	15 3/4	400.1	16 1/2	419.1	16 3/4	425.5	204	92.5	228	103.4	36	914.9	37 3/16	944.0
GH7TA*43600A	A	Y	N	N	N	35	889.0	38 7/8	987.8	7/8	22.2	6 9/16	166.1	28 7/16	722.8	9 1/8	231.3	1 1/8	28.2	3 13/16	97.4	16 3/4	425.5	16 1/2	419.1	18	457.2	221	100.2	245	111.1	36	914.9	40 9/16	1030.4
GH7TA*44800A	A	Y	N	N	N	35	889.0	45 11/16	1160.5	7/8	22.2	6 9/16	166.1	28 7/16	722.8	9 1/8	231.3	1 1/8	28.2	3 13/16	97.4	16	406.4	16 3/4	425.5	24 1/2	622.3	264	119.7	289	131.1	36	914.9	47 3/8	1203.2
GH7TA*46000A	A	Y	N	N	N	35	889.0	45 11/16	1160.5	7/8	22.2	6 9/16	166.1	28 7/16	722.8	9 1/8	231.3	1 1/8	28.2	3 13/16	97.4	17	431.8	16 1/2	419.1	24 1/2	622.3	266	120.7	291	132.0	36	914.9	47 3/8	1203.2
		208-230-1-60	208/230-3-60	460-3-60	575-3-60	Y=YES N=NO																													

NOTES:

1. CENTER OF GRAVITY .

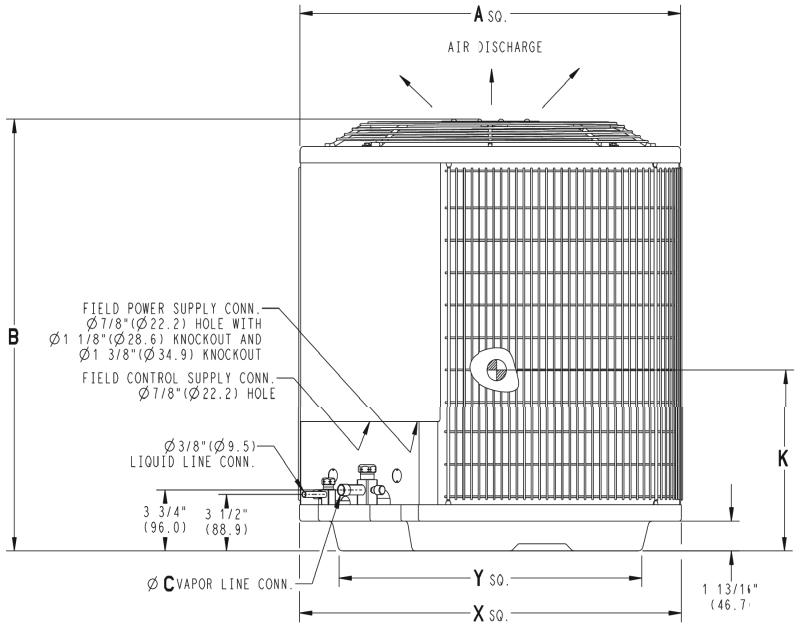

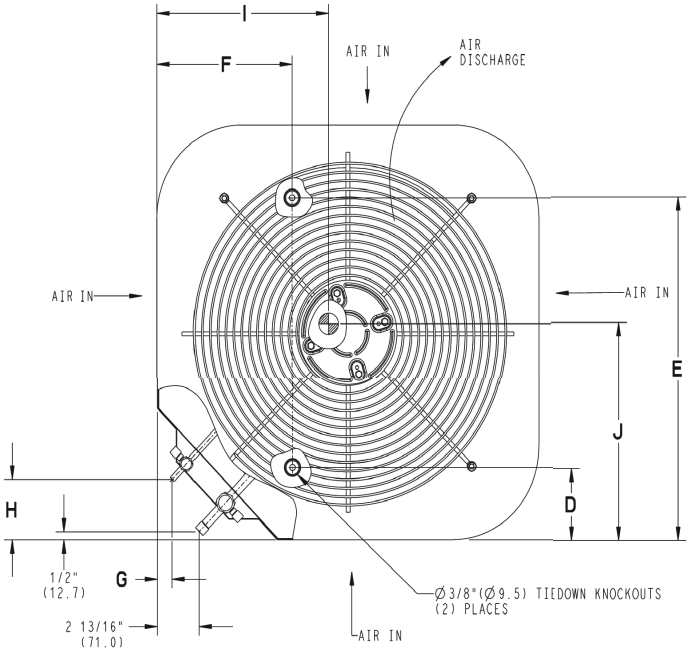

UNIT SIZE	"X" MINIMUM GROUND MOUNTING PAD APPLICATION DIMENSIONS		"Y" MINIMUM ROOF-TOP MOUNTING PAD APPLICATION DIMENSIONS	
-	23 1/8	587.3	17 7/8	454.6
-	25 3/4	654.0	20 7/16	518.5
-	31 3/16	792.5	22 15/16	583.2
24,36,48,60	35	889.0	26 3/4	679.7

NOTE: ALL DIMENSIONS IN INCH (MM)

U.S. ECCN: Not Subject to Regulation (N.S.R.)

SD5740-4 REV. -

Manufacturer reserves the right to change, at any time, specifications and designs without notice and without obligations.

CLEARANCES

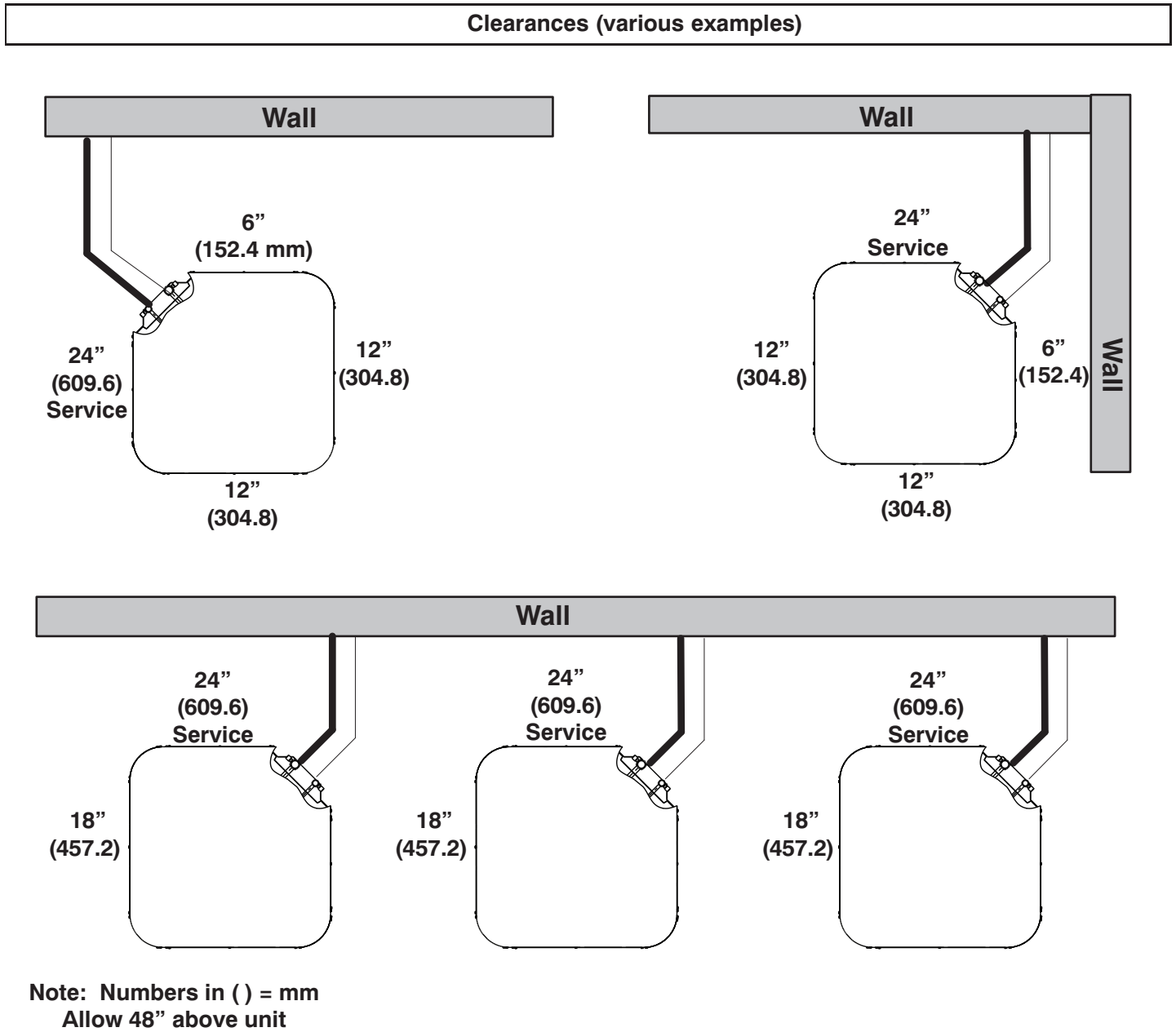

IMPORTANT: When installing multiple units in an alcove, roof well, or partially enclosed area, ensure there is adequate ventilation to prevent re-circulation of discharge air.

A07833

Balance Point Worksheet - High Stage

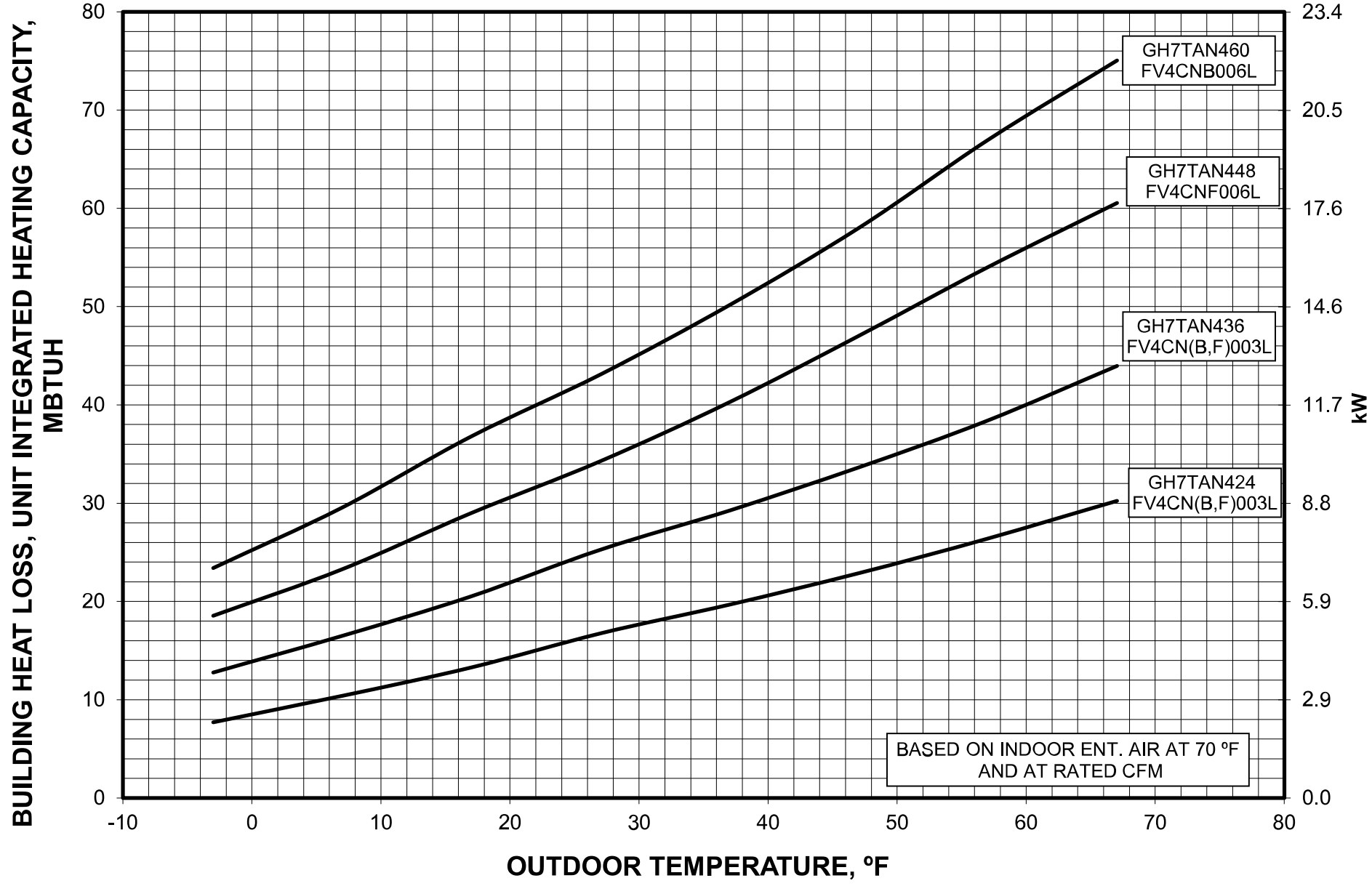

Manufacturer reserves the right to change, at any time, specifications and designs without notice and without obligations.

Balance Point Worksheet - Low Stage

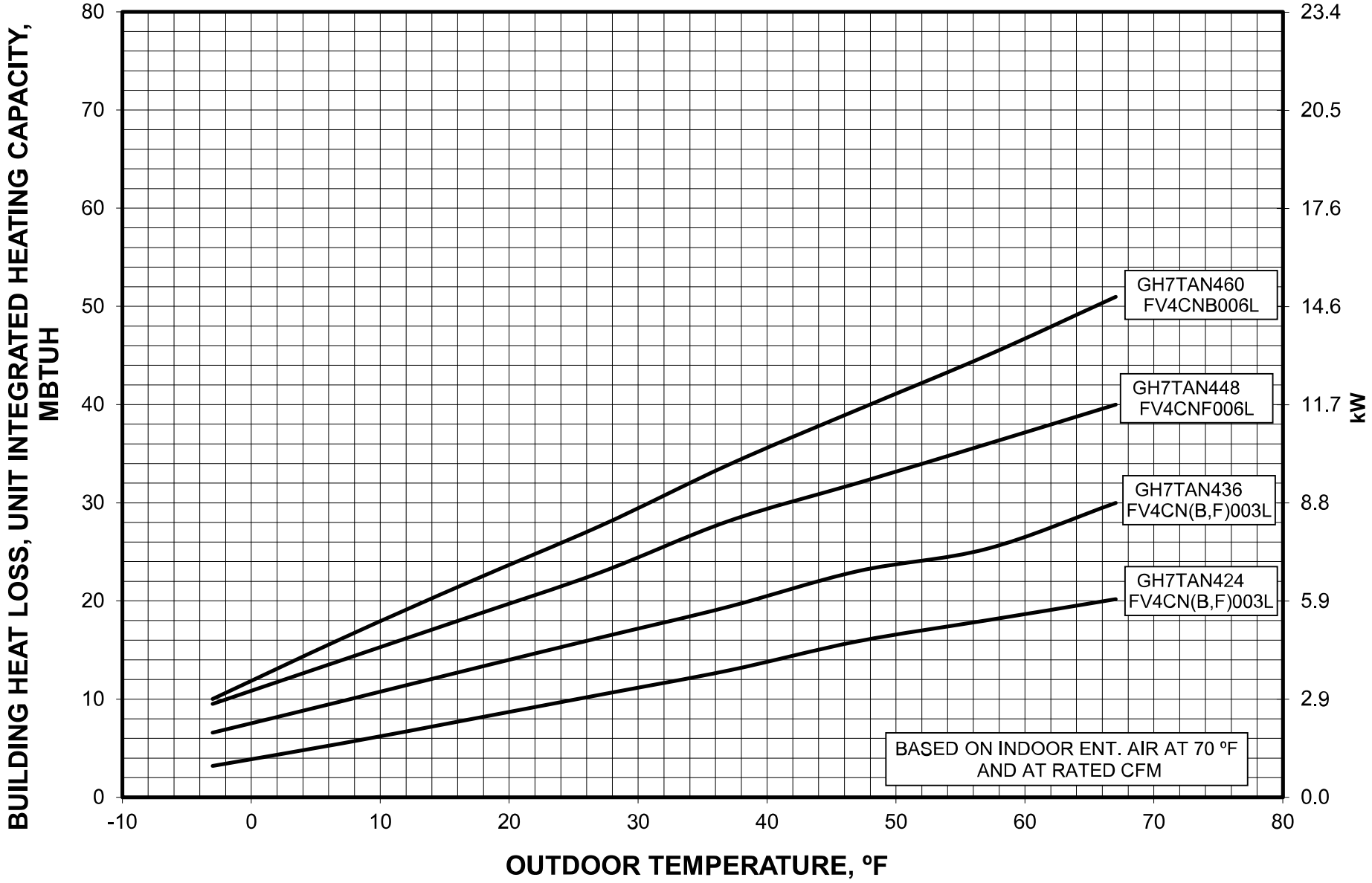

Manufacturer reserves the right to change, at any time, specifications and designs without notice and without obligations.

Detailed Cooling Capacities#

EVAPORATOR AIR		CONDENSER ENTERING AIR TEMPERATURES °F (°C)																	
		75.0 (23.9)			85.0 (29.4)			95.0 (35.0)			105.0 (40.6)			115.0 (46.1)			125.0 (51.7)		
CFM	EWB	Capacity MBtuh		Total Sys.	Capacity MBtuh		Total Sys.	Capacity MBtuh		Total Sys.	Capacity MBtuh		Total Sys.	Capacity MBtuh		Total Sys.	Capacity MBtuh		Total Sys.
		Total	Sens‡	KW**	Total	Sens‡	KW**	Total	Sens‡	KW**	Total	Sens‡	KW**	Total	Sens‡	KW**	Total	Sens‡	KW**
GH7TAN42400A Outdoor Section With FV4CN(B,F)003L Indoor Section - High																			
650	72.0 (22.2)	28.03	14.23	1.50	26.79	13.75	1.71	25.46	13.24	1.93	24.03	12.71	2.18	22.49	12.14	2.45	20.84	11.54	2.77
	67.0 (19.4)	25.32	17.32	1.51	24.18	16.84	1.71	22.96	16.33	1.93	21.65	15.79	2.17	20.25	15.22	2.45	18.73	14.61	2.76
	63.0 (17.2)††	23.39	16.64	1.52	22.32	16.16	1.72	21.18	15.64	1.93	19.96	15.10	2.17	18.65	14.52	2.44	17.24	13.90	2.75
	62.0 (16.7)	22.95	20.36	1.52	21.92	19.86	1.72	20.82	19.33	1.93	19.65	18.76	2.17	18.43	18.43	2.44	17.25	17.25	2.75
	57.0 (13.9)	21.96	21.96	1.52	21.16	21.16	1.72	20.29	20.29	1.93	19.35	19.35	2.17	18.33	18.33	2.44	17.22	17.22	2.75
700	72.0 (22.2)	28.39	14.62	1.51	27.12	14.14	1.72	25.75	13.63	1.94	24.28	13.08	2.19	22.71	12.51	2.47	21.02	11.91	2.79
	67.0 (19.4)	25.67	17.96	1.52	24.48	17.46	1.73	23.23	16.94	1.94	21.89	16.39	2.19	20.45	15.81	2.46	18.91	15.18	2.77
	63.0 (17.2)††	23.70	17.22	1.53	22.60	16.73	1.73	21.43	16.21	1.94	20.18	15.66	2.18	18.84	15.08	2.45	17.39	14.43	2.77
	62.0 (16.7)	23.28	21.19	1.53	22.23	20.68	1.73	21.12	20.13	1.94	19.94	19.50	2.18	18.78	18.78	2.45	17.63	17.63	2.77
	57.0 (13.9)	22.52	22.52	1.54	21.69	21.69	1.73	20.79	20.79	1.94	19.81	19.81	2.18	18.75	18.75	2.45	17.60	17.60	2.77
840	72.0 (22.2)	29.16	15.66	1.55	27.81	15.16	1.76	26.37	14.64	1.98	24.82	14.08	2.23	23.17	13.50	2.51	21.40	12.88	2.83
	67.0 (19.4)	26.37	19.61	1.56	25.13	19.12	1.76	23.80	18.58	1.98	22.39	18.00	2.23	20.88	17.40	2.50	19.28	16.72	2.82
	63.0 (17.2)††	24.37	18.76	1.57	23.23	18.26	1.77	21.97	17.72	1.98	20.49	17.10	2.22	19.25	16.54	2.50	17.76	15.89	2.81
	62.0 (16.7)	24.09	23.33	1.57	23.05	22.62	1.77	21.98	21.98	1.98	20.91	20.91	2.22	19.76	19.76	2.50	18.50	18.50	2.81
	57.0 (13.9)	23.85	23.85	1.57	22.94	22.94	1.77	21.95	21.95	1.98	20.88	20.88	2.22	19.73	19.73	2.50	18.48	18.48	2.81
GH7TAN42400A Outdoor Section With FV4CN(B,F)003L Indoor Section - Low																			
480	72.0 (22.2)	20.75	10.51	0.90	19.58	10.09	1.03	18.36	9.65	1.16	17.07	9.19	1.31	15.71	8.72	1.46	14.28	8.21	1.62
	67.0 (19.4)	18.67	12.77	0.93	17.61	12.35	1.05	16.50	11.90	1.18	15.27	11.39	1.33	14.07	10.93	1.48	12.73	10.40	1.64
	63.0 (17.2)††	17.18	12.24	0.95	16.21	11.82	1.07	15.16	11.37	1.20	14.05	10.90	1.34	12.87	10.39	1.49	11.60	9.86	1.66
	62.0 (16.7)	16.85	15.00	0.96	15.91	14.57	1.08	14.91	14.10	1.21	13.86	13.58	1.34	12.86	12.86	1.49	11.84	11.84	1.65
	57.0 (13.9)	16.21	16.21	0.97	15.46	15.46	1.08	14.65	14.65	1.21	13.78	13.78	1.35	12.83	12.83	1.49	11.82	11.82	1.65
560	72.0 (22.2)	21.33	11.17	0.91	20.08	10.73	1.04	18.80	10.29	1.17	17.45	9.82	1.31	16.04	9.33	1.46	14.55	8.82	1.63
	67.0 (19.4)	19.19	13.81	0.94	18.07	13.37	1.06	16.90	12.91	1.19	15.67	12.43	1.33	14.36	11.90	1.48	12.99	11.37	1.65
	63.0 (17.2)††	17.67	13.20	0.96	16.64	12.77	1.08	15.55	12.31	1.21	14.39	11.82	1.35	13.16	11.30	1.50	11.86	10.75	1.67
	62.0 (16.7)	17.40	16.38	0.96	16.43	15.89	1.08	15.54	15.09	1.21	14.52	14.52	1.35	13.51	13.51	1.50	12.43	12.43	1.66
	57.0 (13.9)	17.13	17.13	0.97	16.31	16.31	1.09	15.43	15.43	1.21	14.49	14.49	1.35	13.49	13.49	1.50	12.41	12.41	1.66
640	72.0 (22.2)	21.75	11.79	0.92	20.46	11.35	1.05	19.12	10.89	1.18	17.72	10.41	1.32	16.27	9.92	1.47	14.74	9.41	1.64
	67.0 (19.4)	19.59	14.81	0.95	18.43	14.35	1.07	17.21	13.88	1.20	15.94	13.38	1.34	14.60	12.86	1.50	13.22	12.26	1.66
	63.0 (17.2)††	18.05	14.13	0.97	16.98	13.68	1.09	15.85	13.20	1.22	14.65	12.69	1.36	13.39	12.16	1.51	12.09	11.56	1.67
	62.0 (16.7)	18.09	17.17	0.97	17.04	17.04	1.09	16.10	16.10	1.22	15.10	15.10	1.35	14.04	14.04	1.50	12.90	12.90	1.66
	57.0 (13.9)	17.89	17.89	0.97	17.01	17.01	1.09	16.08	16.08	1.22	15.08	15.08	1.35	14.02	14.02	1.50	12.88	12.88	1.66

Manufacturer reserves the right to change, at any time, specifications and designs without notice and without obligations.

Detailed Cooling Capacities# (Continued)

EVAPORATOR AIR		CONDENSER ENTERING AIR TEMPERATURES °F (°C)																	
		75.0 (23.9)			85.0 (29.4)			95.0 (35.0)			105.0 (40.6)			115.0 (46.1)			125.0 (51.7)		
CFM	EWB	Capacity MBtuh		Total Sys.	Capacity MBtuh		Total Sys.	Capacity MBtuh		Total Sys.	Capacity MBtuh		Total Sys.	Capacity MBtuh		Total Sys.	Capacity MBtuh		Total Sys.
		Total	Sens‡	KW**	Total	Sens‡	KW**	Total	Sens‡	KW**	Total	Sens‡	KW**	Total	Sens‡	KW**	Total	Sens‡	KW**
GH7TAN43600A Outdoor Section With FV4CN(B,F)003L Indoor Section - High																			
975	72.0 (22.2)	40.48	20.63	2.36	38.74	19.95	2.59	36.88	19.23	2.85	34.87	18.47	3.17	32.68	17.65	3.54	30.31	16.77	3.99
	67.0 (19.4)	36.59	25.19	2.34	34.98	24.50	2.57	33.29	23.77	2.84	31.44	23.00	3.15	29.43	22.16	3.53	27.25	21.28	3.97
	63.0 (17.2)††	33.77	24.18	2.33	32.30	23.50	2.56	30.69	22.77	2.83	28.97	21.99	3.14	27.09	21.16	3.51	25.05	20.26	3.96
	62.0 (16.7)	33.16	29.64	2.32	31.70	28.91	2.56	30.18	28.15	2.82	28.53	27.31	3.14	26.79	26.34	3.51	24.98	24.98	3.96
	57.0 (13.9)	31.68	31.68	2.32	30.54	30.54	2.55	29.33	29.33	2.82	28.00	28.00	3.13	26.55	26.55	3.51	24.94	24.94	3.96
1050	72.0 (22.2)	40.96	21.15	2.38	39.17	20.46	2.61	37.26	19.74	2.88	35.20	18.97	3.20	32.97	18.14	3.57	30.55	17.26	4.01
	67.0 (19.4)	37.03	26.04	2.37	35.38	25.34	2.60	33.64	24.61	2.87	31.75	23.82	3.18	29.70	22.99	3.56	27.47	22.03	4.00
	63.0 (17.2)††	34.19	24.97	2.35	32.67	24.28	2.59	31.02	23.54	2.85	29.26	22.74	3.17	27.34	21.91	3.54	25.26	20.99	3.99
	62.0 (16.7)	33.59	30.75	2.35	32.13	30.02	2.58	30.57	29.22	2.85	28.91	28.32	3.17	27.16	27.16	3.54	25.49	25.49	3.99
	57.0 (13.9)	32.43	32.43	2.35	31.25	31.25	2.58	29.99	29.99	2.85	28.62	28.62	3.16	27.11	27.11	3.54	25.45	25.45	3.99
1205	72.0 (22.2)	41.74	22.17	2.44	39.87	21.47	2.67	37.89	20.74	2.94	35.75	19.95	3.25	33.43	19.11	3.63	30.93	18.22	4.07
	67.0 (19.4)	37.75	27.71	2.43	36.03	27.00	2.66	34.20	26.25	2.92	32.24	25.46	3.24	30.12	24.58	3.61	27.83	23.64	4.06
	63.0 (17.2)††	34.86	26.52	2.41	33.25	25.81	2.64	31.56	25.06	2.91	29.73	24.25	3.22	27.75	23.34	3.60	25.60	22.42	4.04
	62.0 (16.7)	34.38	32.91	2.41	32.87	32.08	2.64	31.61	30.28	2.91	29.74	29.74	3.23	28.14	28.14	3.60	26.37	26.37	4.05
	57.0 (13.9)	33.76	33.76	2.41	32.52	32.52	2.64	31.17	31.17	2.91	29.71	29.71	3.22	28.10	28.10	3.60	26.34	26.34	4.05
GH7TAN43600A Outdoor Section With FV4CN(B,F)003L Indoor Section - Low																			
720	72.0 (22.2)	29.51	15.45	1.48	28.43	14.99	1.66	27.23	14.49	1.86	25.89	13.97	2.06	24.40	13.40	2.27	22.74	12.79	2.51
	67.0 (19.4)	26.58	18.90	1.50	25.60	18.47	1.68	24.51	18.00	1.87	23.28	17.47	2.07	21.89	16.92	2.29	20.35	16.27	2.52
	63.0 (17.2)††	24.47	18.10	1.52	23.58	17.67	1.70	22.56	17.19	1.89	21.39	16.67	2.09	20.06	16.00	2.30	18.57	15.44	2.54
	62.0 (16.7)	24.03	22.26	1.53	23.19	21.84	1.70	22.23	21.35	1.89	21.16	20.74	2.09	20.08	20.08	2.30	18.95	18.95	2.54
	57.0 (13.9)	23.20	23.20	1.54	22.60	22.60	1.71	21.88	21.88	1.89	21.03	21.03	2.09	20.05	20.05	2.30	18.92	18.92	2.54
840	72.0 (22.2)	30.24	16.37	1.51	29.07	15.90	1.69	27.80	15.39	1.88	26.39	14.86	2.08	24.83	14.29	2.30	23.11	13.68	2.53
	67.0 (19.4)	27.24	20.38	1.53	26.20	19.93	1.71	25.05	19.45	1.90	23.74	18.97	2.10	22.31	18.35	2.31	20.70	17.71	2.55
	63.0 (17.2)††	25.09	19.47	1.55	24.14	19.03	1.72	23.06	18.54	1.91	21.86	17.99	2.11	20.48	17.38	2.33	18.93	16.73	2.56
	62.0 (16.7)	24.76	24.17	1.55	23.90	23.66	1.72	23.14	22.54	1.91	22.06	22.06	2.11	21.00	21.00	2.32	19.79	19.79	2.55
	57.0 (13.9)	24.41	24.41	1.55	23.74	23.74	1.73	22.95	22.95	1.91	22.03	22.03	2.11	20.97	20.97	2.32	19.77	19.77	2.55
960	72.0 (22.2)	30.77	17.23	1.53	29.54	16.75	1.72	28.21	16.24	1.91	26.74	15.71	2.11	25.13	15.13	2.32	23.35	14.51	2.55
	67.0 (19.4)	27.74	21.77	1.55	26.65	21.30	1.73	25.44	20.82	1.92	24.10	20.28	2.12	22.62	19.69	2.34	20.99	19.02	2.57
	63.0 (17.2)††	25.56	20.76	1.57	24.56	20.30	1.75	23.44	19.80	1.94	22.18	19.25	2.14	20.78	18.63	2.35	19.21	17.89	2.59
	62.0 (16.7)	25.79	24.82	1.57	24.70	24.70	1.75	23.85	23.85	1.93	22.86	22.86	2.13	21.75	21.75	2.34	20.47	20.47	2.57
	57.0 (13.9)	25.40	25.40	1.57	24.67	24.67	1.75	23.82	23.82	1.93	22.83	22.83	2.13	21.72	21.72	2.34	20.44	20.44	2.57

Manufacturer reserves the right to change, at any time, specifications and designs without notice and without obligations.

Detailed Cooling Capacities# (Continued)

EVAPORATOR AIR		CONDENSER ENTERING AIR TEMPERATURES °F (°C)																	
		75.0 (23.9)			85.0 (29.4)			95.0 (35.0)			105.0 (40.6)			115.0 (46.1)			125.0 (51.7)		
CFM	EWB	Capacity MBtuh		Total Sys.	Capacity MBtuh		Total Sys.	Capacity MBtuh		Total Sys.	Capacity MBtuh		Total Sys.	Capacity MBtuh		Total Sys.	Capacity MBtuh		Total Sys.
		Total	Sens‡	KW**	Total	Sens‡	KW**	Total	Sens‡	KW**	Total	Sens‡	KW**	Total	Sens‡	KW**	Total	Sens‡	KW**
GH7TAN44800A Outdoor Section With FV4CNB006L Indoor Section - High																			
1300	72.0 (22.2)	55.95	28.59	3.25	53.40	27.60	3.54	50.65	26.54	3.87	47.63	25.40	4.25	44.27	24.15	4.68	40.56	22.79	5.18
	67.0 (19.4)	50.78	34.89	3.21	48.47	33.90	3.51	45.99	32.85	3.84	43.30	31.72	4.22	40.25	30.47	4.66	36.91	29.11	5.16
	63.0 (17.2)††	47.02	33.58	3.18	44.91	32.60	3.48	42.62	31.56	3.82	40.14	30.45	4.20	37.39	29.23	4.64	34.33	27.89	5.14
	62.0 (16.7)	46.11	41.03	3.17	44.05	40.04	3.48	41.84	38.97	3.81	39.48	37.80	4.19	36.86	36.46	4.63	34.25	34.25	5.14
	57.0 (13.9)	44.02	44.02	3.16	42.42	42.42	3.46	40.69	40.69	3.80	38.79	38.79	4.19	36.65	36.65	4.63	34.20	34.20	5.14
1400	72.0 (22.2)	56.64	29.36	3.28	54.02	28.36	3.58	51.19	27.29	3.91	48.09	26.14	4.28	44.65	24.87	4.71	40.85	23.50	5.21
	67.0 (19.4)	51.44	36.13	3.24	49.05	35.13	3.54	46.50	34.06	3.88	43.71	32.91	4.25	40.60	31.65	4.69	37.19	30.27	5.19
	63.0 (17.2)††	47.65	34.74	3.21	45.45	33.74	3.52	43.12	32.70	3.85	40.55	31.56	4.23	37.74	30.32	4.67	34.61	28.96	5.17
	62.0 (16.7)	46.77	42.71	3.21	44.66	41.70	3.51	42.40	40.59	3.85	39.98	39.35	4.23	37.64	37.19	4.67	34.92	34.92	5.17
	57.0 (13.9)	45.14	45.14	3.20	43.48	43.48	3.50	41.67	41.67	3.84	39.68	39.68	4.22	37.44	37.44	4.67	34.88	34.88	5.17
1600	72.0 (22.2)	57.75	30.85	3.35	55.01	29.82	3.64	52.05	28.73	3.97	48.80	27.55	4.34	45.23	26.26	4.77	41.32	24.87	5.27
	67.0 (19.4)	52.48	38.53	3.31	49.98	37.50	3.61	47.30	36.41	3.94	44.39	35.23	4.32	41.17	33.93	4.75	37.63	32.51	5.25
	63.0 (17.2)††	48.66	36.98	3.28	46.35	35.96	3.58	43.91	34.88	3.91	41.24	33.71	4.29	38.30	32.43	4.73	35.04	31.05	5.24
	62.0 (16.7)	47.90	45.90	3.27	45.71	44.76	3.58	43.70	42.83	3.91	41.26	41.26	4.29	38.82	38.82	4.73	36.06	36.06	5.24
	57.0 (13.9)	47.10	47.10	3.27	45.29	45.29	3.57	43.36	43.36	3.91	41.20	41.20	4.29	38.77	38.77	4.73	36.01	36.01	5.24
GH7TAN44800A Outdoor Section With FV4CNB006L Indoor Section - Low																			
960	72.0 (22.2)	42.27	21.94	1.81	39.94	21.08	2.04	37.19	20.07	2.27	34.12	18.94	2.52	30.79	17.74	2.77	27.20	16.45	3.04
	67.0 (19.4)	38.16	26.85	1.83	36.02	25.95	2.06	33.50	24.90	2.29	30.69	23.73	2.53	27.66	22.49	2.79	24.49	21.20	3.06
	63.0 (17.2)††	35.18	25.74	1.85	33.18	24.84	2.08	30.83	23.79	2.31	28.21	22.63	2.55	25.41	21.40	2.81	22.47	20.11	3.09
	62.0 (16.7)	34.49	31.64	1.85	32.55	30.70	2.08	30.29	29.58	2.31	28.05	27.86	2.55	25.64	25.64	2.80	23.20	23.20	3.08
	57.0 (13.9)	33.35	33.35	1.87	31.78	31.78	2.09	29.93	29.93	2.31	27.86	27.86	2.55	25.59	25.59	2.81	23.17	23.17	3.08
1120	72.0 (22.2)	43.35	23.33	1.83	40.90	22.44	2.06	38.02	21.40	2.30	34.81	20.25	2.54	31.34	19.01	2.79	27.69	17.72	3.06
	67.0 (19.4)	39.18	29.05	1.85	36.93	28.12	2.08	34.29	27.04	2.31	31.34	25.83	2.55	28.22	24.55	2.81	24.93	23.19	3.08
	63.0 (17.2)††	36.17	27.80	1.87	34.07	26.87	2.10	31.58	25.78	2.33	28.87	24.59	2.57	25.96	23.30	2.83	22.92	21.94	3.10
	62.0 (16.7)	35.60	34.57	1.87	33.64	33.47	2.10	31.57	31.57	2.33	29.32	29.32	2.57	26.87	26.87	2.82	24.25	24.25	3.09
	57.0 (13.9)	35.22	35.22	1.88	33.52	33.52	2.10	31.52	31.52	2.33	29.28	29.28	2.57	26.83	26.83	2.82	24.22	24.22	3.09
1280	72.0 (22.2)	44.13	24.64	1.86	41.60	23.74	2.09	38.62	22.68	2.32	35.30	21.50	2.56	31.74	20.25	2.82	27.99	18.93	3.09
	67.0 (19.4)	39.93	31.16	1.87	37.61	30.21	2.10	34.88	29.09	2.33	31.86	27.84	2.58	28.56	26.47	2.83	25.31	25.00	3.10
	63.0 (17.2)††	36.90	29.76	1.89	34.73	28.81	2.12	32.19	27.69	2.35	29.37	26.45	2.59	26.36	25.08	2.85	23.47	23.20	3.12
	62.0 (16.7)	37.18	35.86	1.89	35.00	35.00	2.12	32.86	32.86	2.34	30.47	30.47	2.58	27.86	27.86	2.83	25.07	25.07	3.10
	57.0 (13.9)	36.75	36.75	1.89	34.94	34.94	2.12	32.81	32.81	2.35	30.43	30.43	2.58	27.82	27.82	2.83	25.04	25.04	3.10

Manufacturer reserves the right to change, at any time, specifications and designs without notice and without obligations.

Detailed Cooling Capacities# (Continued)

EVAPORATOR AIR		CONDENSER ENTERING AIR TEMPERATURES °F (°C)																	
		75.0 (23.9)			85.0 (29.4)			95.0 (35.0)			105.0 (40.6)			115.0 (46.1)			125.0 (51.7)		
CFM	EWB	Capacity MBtuh		Total Sys.	Capacity MBtuh		Total Sys.	Capacity MBtuh		Total Sys.	Capacity MBtuh		Total Sys.	Capacity MBtuh		Total Sys.	Capacity MBtuh		Total Sys.
		Total	Sens‡	KW**	Total	Sens‡	KW**	Total	Sens‡	KW**	Total	Sens‡	KW**	Total	Sens‡	KW**	Total	Sens‡	KW**
GH7TAN46000A Outdoor Section With FV4CNB006L Indoor Section - High																			
1625	72.0 (22.2)	68.16	34.89	3.89	64.99	33.66	4.27	61.58	32.35	4.70	57.87	30.94	5.19	53.80	29.42	5.76	49.37	27.80	6.41
	67.0 (19.4)	61.87	42.73	3.86	58.99	41.50	4.23	55.92	40.20	4.66	52.56	38.79	5.15	48.85	37.27	5.72	44.81	35.62	6.36
	63.0 (17.2)††	57.30	41.12	3.83	54.62	39.89	4.21	51.77	38.59	4.63	48.68	37.20	5.12	45.29	35.69	5.69	41.56	34.06	6.33
	62.0 (16.7)	56.16	50.36	3.83	53.59	49.11	4.20	50.85	47.77	4.63	47.88	46.30	5.12	45.43	42.81	5.69	41.58	41.58	6.33
	57.0 (13.9)	53.69	53.69	3.81	51.70	51.70	4.19	49.54	49.54	4.62	47.16	47.16	5.11	44.51	44.51	5.68	41.52	41.52	6.33
1750	72.0 (22.2)	68.95	35.80	3.94	65.70	34.55	4.32	62.19	33.23	4.75	58.38	31.81	5.24	54.22	30.27	5.81	49.70	28.64	6.46
	67.0 (19.4)	62.61	44.21	3.91	59.65	42.97	4.28	56.50	41.65	4.71	53.03	40.22	5.20	49.25	38.67	5.77	45.13	37.01	6.41
	63.0 (17.2)††	57.98	42.49	3.88	55.25	41.25	4.25	52.33	39.94	4.68	49.16	38.52	5.17	45.68	37.00	5.73	41.88	35.33	6.38
	62.0 (16.7)	56.91	52.37	3.87	54.29	51.08	4.25	51.49	49.67	4.68	48.50	48.06	5.17	45.49	45.49	5.73	42.37	42.37	6.38
	57.0 (13.9)	55.00	55.00	3.86	52.92	52.92	4.24	50.67	50.67	4.67	48.19	48.19	5.17	45.42	45.42	5.73	42.31	42.31	6.38
2000	72.0 (22.2)	70.20	37.53	4.04	66.80	36.26	4.41	63.15	34.91	4.84	59.18	33.46	5.34	54.86	31.90	5.91	50.19	30.24	6.56
	67.0 (19.4)	63.81	47.08	4.00	60.69	45.80	4.37	57.37	44.43	4.80	53.78	42.96	5.29	49.86	41.37	5.86	45.61	39.65	6.51
	63.0 (17.2)††	59.11	45.14	3.97	56.25	43.86	4.35	53.22	42.49	4.77	49.90	41.07	5.26	46.29	39.49	5.83	42.35	37.76	6.47
	62.0 (16.7)	58.21	56.10	3.97	55.52	54.64	4.34	53.02	52.14	4.77	50.01	50.01	5.27	47.03	47.03	5.84	43.69	43.69	6.49
	57.0 (13.9)	57.27	57.27	3.96	55.03	55.03	4.34	52.62	52.62	4.77	49.94	49.94	5.27	46.97	46.97	5.84	43.64	43.64	6.49
GH7TAN46000A Outdoor Section With FV4CNB006L Indoor Section - Low																			
1200	72.0 (22.2)	50.05	26.09	2.31	47.64	25.05	2.61	44.99	23.94	2.93	42.02	22.74	3.26	38.68	21.44	3.63	34.95	20.03	4.02
	67.0 (19.4)	44.98	31.98	2.36	42.74	30.89	2.65	40.30	29.73	2.96	37.60	28.49	3.29	34.55	27.13	3.66	31.13	25.66	4.05
	63.0 (17.2)††	41.40	30.61	2.39	39.31	29.51	2.68	37.02	28.36	2.99	34.47	27.11	3.32	31.62	25.76	3.68	28.49	24.26	4.07
	62.0 (16.7)	40.62	37.76	2.40	38.61	36.59	2.69	36.44	35.31	2.99	34.58	32.92	3.32	31.95	31.95	3.68	29.40	29.40	4.06
	57.0 (13.9)	39.49	39.49	2.41	37.89	37.89	2.69	36.12	36.12	3.00	34.15	34.15	3.32	31.90	31.90	3.68	29.35	29.35	4.06
1400	72.0 (22.2)	51.32	27.74	2.35	48.79	26.67	2.65	46.01	25.53	2.96	42.89	24.29	3.30	39.41	22.96	3.66	35.52	21.51	4.05
	67.0 (19.4)	46.13	34.59	2.39	43.80	33.46	2.68	41.24	32.26	2.99	38.42	30.97	3.33	35.24	29.56	3.69	31.73	28.02	4.08
	63.0 (17.2)††	42.49	33.03	2.42	40.29	31.90	2.71	37.89	30.70	3.02	35.24	29.40	3.35	32.28	27.99	3.72	29.02	26.42	4.10
	62.0 (16.7)	41.91	41.12	2.43	39.94	39.94	2.71	38.03	38.03	3.02	35.89	35.89	3.35	33.47	33.47	3.70	30.72	30.72	4.09
	57.0 (13.9)	41.60	41.60	2.43	39.87	39.87	2.72	37.97	37.97	3.02	35.84	35.84	3.35	33.42	33.42	3.70	30.68	30.68	4.09
1600	72.0 (22.2)	52.26	29.29	2.39	49.64	28.20	2.68	46.74	27.03	3.00	43.52	25.77	3.33	39.92	24.40	3.70	35.91	22.93	4.09
	67.0 (19.4)	47.00	37.08	2.42	44.59	35.91	2.72	41.94	34.67	3.03	39.03	33.33	3.36	35.77	31.85	3.72	32.20	30.15	4.11
	63.0 (17.2)††	43.30	35.33	2.46	41.02	34.16	2.75	38.55	32.92	3.06	35.81	31.58	3.39	32.79	30.08	3.75	29.50	28.30	4.14
	62.0 (16.7)	43.40	43.40	2.45	41.57	41.57	2.74	39.53	39.53	3.05	37.28	37.28	3.38	34.71	34.71	3.73	31.80	31.80	4.12
	57.0 (13.9)	43.34	43.34	2.46	41.51	41.51	2.74	39.47	39.47	3.05	37.23	37.23	3.38	34.66	34.66	3.73	31.76	31.76	4.12

† Total and sensible capacities are net capacities. Blower motor heat has been subtracted.
‡ Sensible capacities shown are based on 80°F (27°C) entering air at the indoor coil. For sensible capacities at other than 80°F (27°C), deduct 835 Btuh (245 kW) per 1000 CFM (480 L/S) of indoor coil air for each degree below 80°F (27°C), or add 835 Btuh (245 kW) per 1000 CFM (480 L/S) of indoor coil air per degree above 80°F (27°C).
**System kw is total of indoor and outdoor unit kilowatts.
††At TVA rating indoor condition (75°F edb/63°F ewb). All other indoor air temperatures are at 80°F edb.
Detailed cooling capacities are based on indoor and outdoor unit at the same elevation per AHRI standard 210/240-08. If additional tubing length and/or indoor unit is located above outdoor unit, a slight variation in capacity may occur.
EWB — Entering Wet Bulb
NOTE: When the required data falls between the published data, interpolation may be performed. Extrapolation is not an acceptable practice.

Manufacturer reserves the right to change, at any time, specifications and designs without notice and without obligations.

HEAT PUMP HEATING PERFORMANCE

INDOOR AIR		OUTDOOR COIL ENTERING AIR TEMPERATURES °F (°C)																							
		-3.0 (-19.4)			7.0 (-13.9)			17.0 (-8.3)			27.0 (-2.8)			37.0 (2.8)			47.0 (8.3)			57.0 (13.9)			67.0 (19.4)		
EDB	CFM	Capacity MBtuh		Total Sys. KW†	Capacity MBtuh		Total Sys. KW†	Capacity MBtuh		Total Sys. KW†	Capacity MBtuh		Total Sys. KW†	Capacity MBtuh		Total Sys. KW†	Capacity MBtuh		Total Sys. KW†	Capacity MBtuh		Total Sys. KW†	Capacity MBtuh		Total Sys. KW†
		Total	Integ*		Total	Integ*		Total	Integ*		Total	Integ*		Total	Integ*		Total	Integ*		Total	Integ*		Total	Integ*	
GH7TAN42400A Outdoor Section With FV4CN(B,F)003L Indoor Section - High																									
65.0 (18.3)	650	8.54	7.86	1.25	11.19	10.29	1.33	14.09	12.85	1.42	17.29	15.36	1.52	20.26	18.44	1.62	23.53	23.53	1.74	27.10	27.10	1.88	30.99	30.99	2.07
	700	8.65	7.96	1.26	11.31	10.39	1.34	14.28	13.02	1.42	17.42	15.47	1.52	20.43	18.59	1.61	23.75	23.75	1.72	27.37	27.37	1.86	31.32	31.32	2.03
	840	8.89	8.18	1.27	11.60	10.66	1.35	14.87	13.56	1.43	17.76	15.77	1.51	20.84	18.96	1.59	24.25	24.25	1.69	27.99	27.99	1.81	32.05	32.05	1.97
70.0 (21.1)	650	8.09	7.44	1.30	10.75	9.88	1.39	13.62	12.41	1.48	16.95	15.06	1.59	19.88	18.09	1.70	23.09	23.09	1.82	26.61	26.61	1.97	30.45	30.45	2.16
	700	8.18	7.53	1.31	10.87	9.98	1.39	13.76	12.54	1.48	17.08	15.17	1.59	20.05	18.25	1.68	23.31	23.31	1.80	26.88	26.88	1.94	30.77	30.77	2.12
	840	8.43	7.75	1.33	11.14	10.24	1.41	14.10	12.86	1.49	17.41	15.46	1.58	20.45	18.61	1.66	23.80	23.80	1.77	27.48	27.48	1.89	31.49	31.49	2.06
75.0 (23.9)	650	7.62	7.01	1.35	10.29	9.45	1.45	13.15	11.99	1.54	16.61	14.75	1.67	19.50	17.75	1.77	22.67	22.67	1.90	26.13	26.13	2.05	29.91	29.91	2.25
	700	7.71	7.10	1.36	10.41	9.56	1.45	13.29	12.12	1.54	16.75	14.88	1.66	19.67	17.90	1.76	22.87	22.87	1.88	26.39	26.39	2.03	30.22	30.22	2.21
	840	7.94	7.31	1.38	10.68	9.82	1.46	13.62	12.42	1.55	17.06	15.15	1.65	20.05	18.25	1.74	23.35	23.35	1.85	26.98	26.98	1.98	30.93	30.93	2.15
GH7TAN42400A Outdoor Section With FV4CN(B,F)003L Indoor section - Low																									
65.0 (18.3)	480	4.29	3.95	1.02	6.67	6.13	1.05	9.06	8.26	1.09	11.47	10.19	1.13	13.92	12.66	1.18	16.60	16.60	1.24	18.70	18.70	1.29	20.85	20.85	1.36
	560	4.41	4.06	1.03	6.83	6.28	1.06	9.28	8.46	1.09	11.74	10.43	1.12	14.33	13.04	1.16	16.93	16.93	1.20	19.13	19.13	1.24	21.38	21.38	1.29
	640	4.51	4.15	1.04	6.97	6.41	1.06	9.46	8.62	1.09	11.97	10.63	1.11	14.35	13.05	1.15	17.19	17.19	1.18	19.47	19.47	1.21	21.81	21.81	1.25
70.0 (21.1)	480	3.89	3.58	1.06	6.20	5.70	1.10	8.59	7.83	1.14	11.00	9.77	1.18	13.44	12.23	1.23	16.22	16.22	1.31	18.30	18.30	1.36	20.42	20.42	1.43
	560	3.95	3.64	1.07	6.37	5.85	1.10	8.81	8.03	1.14	11.27	10.01	1.17	13.79	12.55	1.21	16.55	16.55	1.27	18.72	18.72	1.31	20.94	20.94	1.36
	640	4.06	3.74	1.08	6.50	5.98	1.11	8.99	8.20	1.14	11.50	10.21	1.17	14.06	12.79	1.20	16.83	16.83	1.24	19.05	19.05	1.27	21.35	21.35	1.32
75.0 (23.9)	480	3.29	3.03	1.10	5.68	5.22	1.14	8.08	7.37	1.19	10.49	9.32	1.24	12.93	11.77	1.29	15.78	15.78	1.37	17.91	17.91	1.43	19.99	19.99	1.50
	560	3.45	3.18	1.11	5.84	5.37	1.15	8.30	7.57	1.19	10.77	9.56	1.23	13.26	12.07	1.27	16.16	16.16	1.34	18.31	18.31	1.38	20.49	20.49	1.44
	640	3.51	3.23	1.12	5.98	5.50	1.16	8.48	7.73	1.19	11.00	9.77	1.22	13.54	12.32	1.26	16.44	16.44	1.31	18.64	18.64	1.35	20.89	20.89	1.39
GH7TAN43600A Outdoor Section With FV4CN(B,F)003L Indoor section - High																									
65.0 (18.3)	975	13.90	12.79	2.10	17.56	16.14	2.19	21.67	19.76	2.30	25.99	23.09	2.43	30.07	27.37	2.54	34.54	34.54	2.68	39.48	39.48	2.84	45.22	45.22	3.06
	1050	14.06	12.94	2.11	17.75	16.31	2.20	21.97	20.03	2.31	26.19	23.26	2.42	30.31	27.59	2.53	34.84	34.84	2.66	39.87	39.87	2.82	45.72	45.72	3.03
	1205	14.38	13.23	2.15	18.10	16.63	2.23	22.71	20.71	2.34	26.55	23.58	2.43	30.76	27.99	2.53	35.37	35.37	2.65	40.56	40.56	2.80	46.56	46.56	3.00
70.0 (21.1)	975	13.29	12.23	2.18	16.99	15.61	2.28	20.98	19.13	2.39	25.57	22.71	2.53	29.60	26.93	2.65	33.99	33.99	2.79	38.79	38.79	2.96	44.40	44.40	3.18
	1050	13.45	12.38	2.19	17.17	15.78	2.29	21.20	19.33	2.40	25.77	22.89	2.53	29.83	27.15	2.64	34.28	34.28	2.77	39.17	39.17	2.93	44.88	44.88	3.15
	1205	13.77	12.67	2.23	17.51	16.09	2.32	21.60	19.69	2.42	26.13	23.20	2.53	30.26	27.54	2.63	34.80	34.80	2.76	39.84	39.84	2.91	45.71	45.71	3.11
75.0 (23.9)	975	12.69	11.67	2.26	16.40	15.07	2.37	20.39	18.59	2.48	25.18	22.36	2.64	29.12	26.50	2.76	33.44	33.44	2.91	38.12	38.12	3.08	43.59	43.59	3.31
	1050	12.84	11.82	2.27	16.58	15.23	2.38	20.59	18.77	2.49	25.35	22.52	2.63	29.35	26.71	2.75	33.73	33.73	2.89	38.50	38.50	3.05	44.05	44.05	3.28
	1205	13.14	12.09	2.31	16.91	15.54	2.41	20.98	19.12	2.51	25.71	22.83	2.64	29.77	27.09	2.74	34.24	34.24	2.87	39.13	39.13	3.02	44.86	44.86	3.23
GH7TAN43600A Outdoor Section With FV4CN(B,F)003L Indoor Section - Low																									
65.0 (18.3)	720	8.52	7.84	1.67	11.46	10.53	1.72	14.52	13.24	1.75	17.59	15.62	1.78	20.68	18.81	1.81	23.87	23.87	1.86	26.07	26.07	1.90	28.27	28.27	1.95
	840	8.78	8.07	1.69	11.75	10.80	1.73	14.85	13.54	1.76	17.98	15.97	1.77	21.19	19.28	1.79	24.29	24.29	1.81	26.64	26.64	1.83	28.87	28.87	1.87
	960	9.00	8.28	1.71	12.01	11.04	1.75	15.14	13.80	1.77	18.31	16.26	1.77	21.72	19.76	1.78	24.55	24.55	1.79	27.05	27.05	1.80	29.36	29.36	1.83
70.0 (21.1)	720	7.76	7.14	1.74	10.76	9.89	1.80	13.85	12.63	1.83	16.97	15.07	1.86	20.04	18.24	1.90	23.44	23.44	1.96	25.66	25.66	2.00	27.76	27.76	2.05
	840	8.01	7.37	1.76	11.04	10.15	1.81	14.20	12.95	1.84	17.36	15.42	1.86	20.49	18.65	1.87	23.85	23.85	1.91	26.17	26.17	1.93	28.32	28.32	1.97
	960	8.23	7.57	1.79	11.30	10.38	1.83	14.49	13.21	1.85	17.69	15.71	1.86	20.90	19.02	1.86	24.19	24.19	1.89	26.57	26.57	1.90	28.83	28.83	1.93
75.0 (23.9)	720	6.85	6.30	1.81	9.97	9.17	1.87	13.15	11.99	1.92	16.30	14.48	1.95	19.40	17.65	1.99	22.94	22.94	2.06	25.20	25.20	2.10	27.26	27.26	2.15
	840	7.13	6.56	1.84	10.27	9.43	1.89	13.49	12.30	1.92	16.69	14.83	1.94	19.87	18.08	1.97	23.40	23.40	2.02	25.69	25.69	2.04	27.84	27.84	2.08
	960	7.35	6.76	1.86	10.52	9.66	1.91	13.78	12.57	1.93	17.03	15.13	1.94	20.23	18.41	1.96	23.74	23.74	1.99	26.08	26.08	2.00	28.30	28.30	2.03

Manufacturer reserves the right to change, at any time, specifications and designs without notice and without obligations.

HEAT PUMP HEATING PERFORMANCE (Continued)

INDOOR AIR		OUTDOOR COIL ENTERING AIR TEMPERATURES °F (°C)																							
		-3.0 (-19.4)			7.0 (-13.9)			17.0 (-8.3)			27.0 (-2.8)			37.0 (2.8)			47.0 (8.3)			57.0 (13.9)			67.0 (19.4)		
		Capacity MBtuh		Total Sys. KW†	Capacity MBtuh		Total Sys. KW†	Capacity MBtuh		Total Sys. KW†	Capacity MBtuh		Total Sys. KW†	Capacity MBtuh		Total Sys. KW†	Capacity MBtuh		Total Sys. KW†	Capacity MBtuh		Total Sys. KW†	Capacity MBtuh		Total Sys. KW†
EDB	CFM	Total	Integ*		Total	Integ*		Total	Integ*		Total	Integ*		Total	Integ*		Total	Integ*		Total	Integ*		Total	Integ*	
GH7TAN44800A Outdoor Section With FV4CNB006L Indoor Section - High																									
65.0 (18.3)	1300	19.09	17.56	2.60	23.79	21.86	2.74	29.28	26.70	2.92	34.59	30.72	3.10	40.62	36.96	3.31	47.38	47.38	3.56	54.51	54.51	3.79	61.57	61.57	4.07
	1400	19.28	17.74	2.61	24.02	22.07	2.75	29.49	26.89	2.91	34.84	30.94	3.08	40.93	37.24	3.29	47.75	47.75	3.53	54.72	54.72	3.75	61.88	61.88	4.02
	1600	19.64	18.07	2.63	24.53	22.54	2.76	29.84	27.21	2.91	35.28	31.34	3.08	41.46	37.73	3.27	48.38	48.38	3.49	54.92	54.92	3.69	48.22	48.22	3.60
70.0 (21.1)	1300	18.36	16.89	2.70	23.05	21.18	2.85	28.80	26.26	3.04	34.03	30.22	3.23	39.96	36.37	3.45	46.63	46.63	3.70	53.78	53.78	3.94	60.51	60.51	4.23
	1400	18.56	17.07	2.71	23.27	21.38	2.86	29.00	26.44	3.04	34.27	30.44	3.21	40.27	36.65	3.43	47.00	47.00	3.67	54.58	54.58	3.89	60.79	60.79	4.18
	1600	18.89	17.38	2.74	23.67	21.75	2.87	29.33	26.75	3.04	34.70	30.82	3.21	40.79	37.12	3.40	47.63	47.63	3.64	54.25	54.25	3.84	48.21	48.21	3.79
75.0 (23.9)	1300	17.65	16.23	2.81	22.35	20.54	2.97	28.33	25.83	3.17	33.49	29.74	3.36	39.34	35.79	3.59	45.88	45.88	3.85	53.03	53.03	4.11	59.62	59.62	4.40
	1400	17.82	16.40	2.82	22.56	20.73	2.97	28.52	26.00	3.17	33.72	29.95	3.35	39.63	36.06	3.57	46.24	46.24	3.82	53.55	53.55	4.05	59.79	59.79	4.34
	1600	18.15	16.70	2.85	22.93	21.07	2.99	28.85	26.31	3.17	34.14	30.32	3.34	40.13	36.52	3.54	46.87	46.87	3.78	53.56	53.56	3.99	47.96	47.96	3.94
GH7TAN44800A Outdoor Section With FV4CNB006L Indoor Section - Low																									
65.0 (18.3)	960	10.13	9.32	2.09	14.47	13.30	2.16	18.84	17.17	2.21	23.21	20.61	2.26	28.27	25.73	2.35	32.07	32.07	2.41	35.96	35.96	2.51	39.92	39.92	2.64
	1120	10.37	9.54	2.10	14.79	13.59	2.16	19.23	17.54	2.20	23.71	21.06	2.23	28.77	26.19	2.29	32.68	32.68	2.34	36.75	36.75	2.42	40.77	40.77	2.51
	1280	10.59	9.74	2.12	15.06	13.84	2.17	19.55	17.83	2.20	24.11	21.41	2.22	29.13	26.51	2.26	33.16	33.16	2.29	37.35	37.35	2.36	41.30	41.30	2.43
70.0 (21.1)	960	9.28	8.54	2.18	13.63	12.52	2.25	17.99	16.40	2.31	22.35	19.85	2.37	27.02	24.59	2.45	31.38	31.38	2.54	35.18	35.18	2.64	39.13	39.13	2.77
	1120	9.53	8.77	2.19	13.96	12.82	2.26	18.40	16.78	2.30	22.87	20.31	2.34	28.11	25.58	2.42	32.00	32.00	2.47	35.97	35.97	2.55	40.01	40.01	2.65
	1280	9.75	8.97	2.21	14.23	13.07	2.27	18.75	17.09	2.30	23.28	20.67	2.33	28.53	25.96	2.39	32.48	32.48	2.42	36.59	36.59	2.49	40.52	40.52	2.57
75.0 (23.9)	960	8.39	7.72	2.27	12.67	11.65	2.35	17.05	15.54	2.42	21.43	19.03	2.48	25.89	23.56	2.56	30.64	30.64	2.67	34.39	34.39	2.78	38.26	38.26	2.92
	1120	8.53	7.84	2.28	13.00	11.95	2.36	17.48	15.94	2.41	21.95	19.50	2.46	26.60	24.21	2.52	31.26	31.26	2.60	35.17	35.17	2.69	39.21	39.21	2.79
	1280	8.84	8.13	2.30	13.27	12.20	2.37	17.82	16.25	2.41	22.37	19.87	2.45	27.27	24.81	2.50	31.77	31.77	2.56	35.79	35.79	2.63	39.81	39.81	2.71
GH7TAN46000A Outdoor Section With FV4CNB006L Indoor Section - High																									
65.0 (18.3)	1625	23.99	22.07	3.33	30.10	27.66	3.54	37.08	33.81	3.77	43.39	38.54	3.97	50.47	45.93	4.21	58.48	58.48	4.50	67.35	67.35	4.80	75.28	75.28	5.10
	1750	24.24	22.30	3.35	30.39	27.93	3.55	37.34	34.05	3.77	43.70	38.81	3.97	50.86	46.28	4.20	58.78	58.78	4.47	67.76	67.76	4.74	75.37	75.37	5.04
	2000	24.70	22.72	3.40	30.92	28.41	3.59	37.82	34.48	3.79	44.29	39.34	3.98	51.54	46.90	4.19	59.59	59.59	4.45	68.07	68.07	4.68	75.28	75.28	4.96
70.0 (21.1)	1625	23.16	21.31	3.48	29.26	26.89	3.69	36.55	33.32	3.93	42.75	37.96	4.14	49.70	45.22	4.39	57.41	57.41	4.68	66.25	66.25	5.01	74.33	74.33	5.32
	1750	23.41	21.53	3.50	29.54	27.15	3.70	36.80	33.55	3.94	43.05	38.23	4.14	50.07	45.57	4.38	58.00	58.00	4.66	66.78	66.78	4.95	74.47	74.47	5.25
	2000	23.87	21.96	3.55	30.06	27.63	3.74	37.24	33.96	3.96	43.62	38.74	4.15	50.75	46.18	4.37	59.04	59.04	4.64	67.27	67.27	4.87	74.45	74.45	5.17
75.0 (23.9)	1625	22.32	20.53	3.62	28.43	26.13	3.84	35.97	32.79	4.11	42.11	37.40	4.32	48.93	44.53	4.58	56.52	56.52	4.88	65.09	65.09	5.24	73.35	73.35	5.54
	1750	22.56	20.75	3.64	28.71	26.38	3.86	36.23	33.04	4.11	42.41	37.67	4.32	49.31	44.87	4.56	56.97	56.97	4.85	65.69	65.69	5.17	73.51	73.51	5.47
	2000	23.00	21.16	3.69	29.21	26.84	3.90	36.70	33.46	4.13	42.95	38.15	4.32	49.97	45.47	4.55	57.75	57.75	4.82	66.38	66.38	5.08	73.58	73.58	5.38
GH7TAN46000A Outdoor Section With FV4CNB006L Indoor Section - Low																									
65.0 (18.3)	1200	10.89	10.01	2.28	16.92	15.55	2.45	22.53	20.54	2.59	28.03	24.89	2.71	34.49	31.39	2.87	39.54	39.54	2.99	44.98	44.98	3.14	50.88	50.88	3.34
	1400	11.18	10.28	2.31	17.37	15.96	2.47	23.07	21.03	2.59	28.63	25.43	2.70	35.08	31.92	2.83	40.21	40.21	2.92	45.80	45.80	3.04	51.86	51.86	3.18
	1600	11.47	10.55	2.34	17.75	16.31	2.49	23.51	21.43	2.60	29.14	25.88	2.69	35.51	32.32	2.80	40.75	40.75	2.88	46.45	46.45	2.98	52.36	52.36	3.10
70.0 (21.1)	1200	9.63	8.86	2.38	15.79	14.51	2.56	21.47	19.58	2.71	27.02	24.00	2.84	32.80	29.85	2.98	38.84	38.84	3.15	44.19	44.19	3.31	49.98	49.98	3.52
	1400	9.89	9.10	2.41	16.22	14.91	2.57	22.00	20.06	2.71	27.62	24.53	2.83	33.85	30.80	2.96	39.50	39.50	3.08	45.00	45.00	3.21	50.93	50.93	3.37
	1600	10.15	9.34	2.44	16.59	15.24	2.60	22.43	20.45	2.72	28.11	24.97	2.82	34.82	31.69	2.95	40.02	40.02	3.04	45.65	45.65	3.15	51.70	51.70	3.27
75.0 (23.9)	1200	8.26	7.60	2.47	14.63	13.45	2.67	20.39	18.59	2.83	25.99	23.09	2.98	31.68	28.82	3.12	38.12	38.12	3.32	43.36	43.36	3.48	49.06	49.06	3.70
	1400	8.54	7.85	2.51	15.04	13.82	2.69	20.89	19.05	2.83	26.60	23.63	2.96	32.40	29.49	3.09	38.75	38.75	3.25	44.18	44.18	3.38	50.08	50.08	3.57
	1600	8.79	8.09	2.54	15.39	14.14	2.71	21.31	19.43	2.85	27.09	24.06	2.96	33.06	30.09	3.07	39.29	39.29	3.20	44.83	44.83	3.32	50.88	50.88	3.46

* The Btuh heating capacity values shown are net integrated values from which the defrost effect has been subtracted. The Btuh heating from supplement heaters should be added to those values to obtain total system capacity.

† The kW values include the compressor, outdoor fan motor, and indoor blower motor. The kW from supplement heaters should be added to these values to obtain total system kilowatts.

EDB— Entering Dry Bulb

NOTE: When the required data falls between the published data, interpolation may be performed. Extrapolation is not an acceptable practice.

Manufacturer reserves the right to change, at any time, specifications and designs without notice and without obligations.

Guide Specifications
GENERAL

Air-cooled, split-system heat pump
GH7T

System Description

Outdoor-mounted, air-cooled, split-system heat pump unit suitable for ground or rooftop installation. Unit consists of a hermetic compressor, an air-cooled coil, propeller-type condenser fan, and a control box. Unit will discharge supply air upward as shown on contract drawings. Unit will be used in a refrigeration circuit to match up to a packaged fan coil or coil unit.

Quality Assurance

- Unit will be rated in accordance with the latest edition of AHRI Standard 210.
- Unit will be certified for capacity and efficiency, and listed in the latest AHRI directory.
- Unit construction will comply with latest edition of ANSI/ ASHRAE and with NEC.
- Unit will be constructed in accordance with UL standards and will carry the UL label of approval. Unit will have c-UL approval.
- Unit cabinet will be capable of withstanding Federal Test Method Standard No. 141 (Method 6061) 500-hr salt spray test.
- Air-cooled condenser coils will be leak tested and pressure tested.
- Unit constructed in ISO9001 approved facility.

Delivery, Storage, and Handling

- Unit will be shipped as single package only and is stored and handled per unit manufacturer's recommendations.

Warranty (for inclusion by specifying engineer)

- U.S. and Canada only.

PRODUCTS

Equipment

- Factory assembled, single piece, air-cooled heat pump unit. Contained within the unit enclosure is all factory wiring, piping, controls, compressor, refrigerant charge Puron (R-410A), and special features required prior to field start-up.

Unit Cabinet

- Unit cabinet will be constructed of galvanized steel, bonderized, and coated with pre-paint.

Fans

Condenser fan will be direct-drive propeller type, discharging air upward.

- Condenser fan motors will be totally enclosed, 1-phase type with class B insulation and permanently lubricated bearings. Shafts will be corrosion resistant.
- Fan blades will be statically and dynamically balanced.
- Condenser fan openings will be equipped with coated steel wire safety guards.

Compressor

- Compressor will be hermetically sealed.
- Compressor will be mounted on rubber vibration isolators.

Condenser Coil

- Condenser coil will be air cooled.
- Coil will be constructed of aluminum fins mechanically bonded to copper or aluminum tubes which are then cleaned, dehydrated, and sealed.

Refrigeration Components

- Refrigeration circuit components will include liquid-line shutoff valve with sweat connections, vapor-line shutoff valve with sweat connections, system charge of Puron (R-410A), refrigerant, and compressor oil.
- Unit will be equipped with low pressure switch and filter drier for Puron (R-410A), refrigerant.

Operating Characteristics

- The capacity of the unit will meet or exceed _____ Btuh at a suction temperature of _____ °F/°C. The power consumption at full load will not exceed _____ kW.
- Combination of the unit and the evaporator or fan coil unit will have a total net cooling capacity of _____ Btuh or greater at conditions of _____ CFM entering air temperature at the evaporator at _____ °F/°C wet bulb and _____ °F/°C dry bulb, and air entering the unit at _____ °F/°C.
- The system will have a SEER of _____ Btuh/watt or greater at DOE conditions.

Electrical Requirements

- Nominal unit electrical characteristics will be _____ v, single phase, 60 hz. The unit will be capable of satisfactory operation within voltage limits of _____ v to _____ v.
- Unit electrical power will be single point connection.
- Control circuit will be 24v.

Special Features

- Refer to section of this literature identifying accessories and descriptions for specific features and available enhancements.

Manufacturer reserves the right to change, at any time, specifications and designs without notice and without obligations.

System Design Summary

1. Intended for outdoor installation with free air inlet and outlet. Outdoor fan external static pressure available is less than 0.01-in. wc.
2. Minimum outdoor operating air temperature without low-ambient operation accessory is 55°F (12.8°C).
3. The maximum outdoor operating ambient in cooling mode is 125°F (51.67°C) when operating voltage is 230v.
4. Minimum outdoor operating air temperature for heating mode is –20°F (–28.9°C).
5. Maximum outdoor operating air temperature for heating mode is 66°F (18.9°C).
6. For reliable operation, unit should be level in all horizontal planes.
7. For interconnecting refrigerant tube lengths greater than 80 ft (23.4 m) and/or elevation differences between indoor and outdoor units greater than 20 ft (6.1 m), consult Residential Piping and Long Line Guideline and Service Manual available from equipment distributor.
8. If any refrigerant tubing is buried, provide a 6 in. (152.4 mm) vertical rise to the valve connections at the unit. Refrigerant tubing lengths up to 36 in. (914.4 mm) may be buried without further consideration. Do not bury refrigerant lines longer than 36 in. (914.4 mm).
9. Use only copper wire for electric connection at unit. Aluminum and clad aluminum are not acceptable for the type of connector provided.
10. Do not apply capillary tube indoor coils to these units.
11. Factory-supplied filter drier must be installed.

Manufacturer reserves the right to change, at any time, specifications and designs without notice and without obligations.

© 2024 Carrier. All rights reserved.

Manufacturer reserves the right to change, at any time, specifications and designs without notice and without obligations.